DRAINAGE REUSE GRANT PROGRAM
GRANT APPLICATION PACKET, 2014 SOLICITATION

Grant Application Checklist *The following information is required to be submitted in proposal applications.*	
	ATTACHMENT 1 *Organizational, Financial, and Legal Information*
☑	Part I: Application Cover Sheet
☑	Part II: Applicant's Representatives
☑	Part III: Summary of Project Costs
☑	Part IV: Authorizing Resolution
	ATTACHMENT 2 *Project Proposal and Task Breakdown*
☑	Project Proposal
	ATTACHMENT 3 *Eligibility Requirements*
☑	Eligibility Checklist
☐	Required Documentation (if applicable)

Attachment 1, Part I – Application Cover Sheet

Application for a grant under § 78645 of the Safe, Clean, Reliable Water Supply Act of 1996

The California State University, Fresno Foundation
(Exact legal name of local entity applying for the grant)

Of 4910 N. Chestnut Avenue
(Mailing address of local entity)

Fresno, CA 93726-1852

Of the County of Fresno, State of California, does hereby apply to the California Department of Water Resources for a grant in the amount of $298,641.

For the following project under the Drainage Reuse Grant Program of the Safe, Clean, Reliable Water Supply Act of 1996:

Optimal Use of Vapor Compression Desalination in Conjunction with Ion Exchange for the Treatment of Agricultural Drainage Water
(Specify project title)

By _____ Date Jan. 5, 2015
(Signature of authorized representative)

Thomas McClanahan, Ph.D. Associate Vice President
(Print or type name of authorized representative) *(Title)*

Telephone 559-278-0857 E-mail orsp@csufresno.edu

Brief Proposal Description:

This project provides an economic and technical evaluation of vapor compression desalination (VCD) technology to concentrate a sodium chloride salinity in the product stream from an ion exchange process treating saline agricultural drainage water to sufficiently high concentration (≈ 50,000 mg/L) to be used to regenerate spent ion exchange resin. This project, funded by Proposition 204 funds, only will be evaluating the VCD technology and the sodium chloride salts will be recycled from VCD unit brine stream to reconstitute with the product water stream to provide the feed water for the VCD unit. Later phases of the project, to be funded from other sources, will use the knowledge derived from this phase of the project for a combined ion exchange - vapor compression desalination process for the treatment of agricultural drainage water.

Attachment 1, Part II – Applicant's Representatives

Project Name Optimal Use of Vapor Compression Desalination in Conjunction with Ion Exchange for the Treatment of Agricultural Drainage Water

Primary Project Contact

Name Maral Kismetian Title Grants Analyst

Address 4910 N. Chestnut Avenue, Fresno, CA 93726

Telephone 559-278-0840 FAX 559-278-0992

E-mail orsp@csufresno.edu

Alternate Project Contact

Name Karl E. Longley Title Water Resources Coordinator

Address 6014 N. Cedar Ave. OF 18. Fresno, CA 93710

Telephone 559-278-2066 FAX 559-278-6033

E-mail karll@csufresno.edu

Alternate Project Contact (If Applicable)

Name David Zoldoske Title Director

Address 5370 N. Chestnut Ave. OF 18. Fresno, CA 93740

Telephone 559-278-2066 FAX 559-278-6033

E-mail davidzo@csufresno.edu

Type of Organization: University

(city, county, water district, university, etc.)

Attach a copy of the applicant's charter and the names and titles of its officers.

Attachment I, Part III – Summary of Project Costs

Provide a summary of the financing information about the proposed project, including cost share (if applicable).

		% of Total Cost
Total Cost of Project:	$300,000	
Amount Requested (CWC §78645):	$298,641	99%
Amount of Cost Share[1]:	$_____	_____
Amount of Federal Contribution:	$_____	_____
In-kind Contributions:	$_____	_____
Amount to Funded by Others Sources: (Describe below in table.)	$_____	_____

Sources of funds from partner agencies for this project, if applicable:

Amount	**Name of Source**	**Status of Funds[2]**
$		
$		
$		
$		
$		
Total: $		

Additional explanation, if necessary:

Notes:

1. No cost share is required; however, grantees are required to show cost share (e.g., federal, local, or other funds) if an awarded project costs more than the grant amount.
2. Identify the current status of funds: available, planned/budgeted, awarded or pending.

Attachment I, Part IV – Authorizing Resolution

Include a resolution adopted by the applicant's governing body authorizing the application for a grant under this program and designating a representative to sign the application. Note that the authorized representative may not be a consultant or subcontractor. If the resolution cannot be signed by the authorized applicant prior to the application due date, indicate in the proposal document when a signed resolution will be received by DWR. Following is a suggested format.

Resolution No._____

Resolved by the _____
(Governing body, city council, or other)

of the _____
(Name of applicant)

that pursuant to all of the terms and provisions of the Safe, Clean, Reliable Water Supply Act of 1996, application by this

_____ be made to the California Department of
("Agency,", "city", "county", or other)

Water Resources to obtain a grant for _____.
(Project title)

The _____ of the
(Presiding officer, president, city manager, or other official)

_____ is hereby authorized and directed to
("Agency", "city", "county", or other)

prepare the necessary date, make investigations, sign, and file such application with the California Department of Water Resources.

Passed and adopted at a regular meeting of the _____
(Board of Directors, Supervisors, etc.)

of the _____
(Name of applicant)

on _____.
(Date)

Attachment 2 – Project Proposal and Task Breakdown

Applicants are required to submit a project proposal with a detailed task breakdown to complete the Drainage Reuse Grant Program grant application. The proposal should provide detailed description, discussion, and documentation for each of the proposal sections listed below. The proposal should describe the tasks that will be undertaken to implement the project and include a budget and schedule that support and are consistent with the identified tasks.

The level of detail must be sufficient to allow reviewers to understand the level of effort of the work being performed and to relate the proposed work to the budget so that the cost estimates can be substantiated. Page limits and character limits are not specified. The applicant should determine the level of detail required to convey how the proposed project meets the objectives and requirements outlined in the Guidelines/PSP.

The project proposal must include the following items, with at least as much detail as specified in the descriptions below.

1. Title of Project

Provide the title of the project. The title must be descriptive of the technologies proposed and provide an idea of what the project is meant to achieve.

2. Principal Investigator/Cooperator(s) and Project Management

Provide the name, contact information, and description of qualifications of the following persons associated with the project. Roles of key personnel must be clearly defined. Key personnel associated with the project must have sufficient expertise to complete the project, and evidence of competence in the proposed area of work must be provided.

- Project Director: Responsible for executing the grant agreement and any amendments and approving invoices for the applicant. Persons that are subcontractors to be paid with the grant funds cannot be listed as the Project Director.
- Project Manager: Day-to-day contact from the applicant, agency, or organization.
- Principal Investigator(s): Person(s) performing the majority of the research associated with this project.
- Other Cooperators: Cooperating individuals and agencies, including consultants, who will be participating in the implementation of the project.

Information for other key personnel associated with the project may also be provided, if applicable. Qualifications may be enhanced through partnerships with other institutions; these relationships with other institutions should be clearly defined and described.

Discussion and evidence of institutional capacity to successfully complete the project should be provided in this section. The discussion should show that proposed personnel, facilities, and equipment is adequate for successfully completing the project.

Based on the key personnel described in this section, proposals should include a clear plan for project management that includes the following components:

- Adequate time allocation for attainment of objectives and delivery of products.
- Maintenance of partnerships and collaborations.
- A strategy to enhance communication, data sharing, and reporting among members of the project team.

Discussion of the project management plan may reference other areas of the proposal as needed. The development of the project management plan should consider the qualifications of key personnel and should incorporate how involved personnel will achieve the project management components above.

3. Scope of Work and Project Description

Provide a scope of work that briefly summarizes the project activities and tasks that will be implemented to achieve proposed outcomes.

Provide a project description that explains the work to be performed and an overview of deliverables for assessing progress and accomplishments. A complete project description should be concise and include the following information:

- A brief explanation of the goals and objectives, or purpose and need, for the project.
- Description of the components of the project that will be funded by DWR.
- If the project constituents a phase of a larger, multi-phase project, include a discussion of how the phase of work supported by DWR funds can operate or be functional without implementation of other phases of work.
- A description of existing contracts, Memorandums of Understanding, Joint Powers Authorities, or other formal agreements with project partners, if applicable.
- A description of the project location including overlying jurisdiction (city, county, State, or federal land), assessor parcel numbers, property addresses, and the latitude/longitude of the project site. It is suggested to include a project map that shows the project's geographical location and the boundaries of the work.

4. Project Objectives and Program Priorities

Project goals and objectives should be clearly described, adequately developed, and appropriate to help achieve the stated program objectives. When possible, quantifiable objectives should be proposed. Objectives may be presented in a tabular or bulleted format to aid in the review and presentation of the information.

The proposal should identify if the proposed project meets any of the stated program priorities and to what extent they are met. Describe and provide sufficient documentation to support how the project meets one or more of the program priorities stated in the Guidelines/PSP.

The proposed research should fill knowledge gaps that are critical and/or valuable to the development of practices and programs to address identified drainage issues. The proposal

should include a discussion about how the proposed project will help fill these knowledge gaps and to what extent the research will increase the understanding of the identified problems.

5. Task Breakdown

The task breakdown should contain descriptions of all of the tasks necessary to complete the proposed project. The descriptions must contain enough detail to sufficiently explain all the work necessary to complete each task, to demonstrate that the tasks are ready for implementation, to prove that there is a high expectation of successful implementation, and to show that the tasks are consistent with the project schedule and budget. Project tasks may be broken into subtasks for additional clarification of the project components. The task breakdown shall include, at a minimum, the following elements:

- Description of the tasks and subtasks required to complete the project.
- Current status of each task.
- Identification of the budget and costs associated with each task. Proposed costs should be detailed and specific and should be reasonable for the proposed work. The narrative accompanying the task budgets should describe how the costs were developed and should include appropriate and complete documentation of proposed costs and billing rates.
- Schedule for implementing each task, including the start and end date for each task. Potential foreseeable interruptions to the schedule should be identified.
- Development of performance measures for appropriate tasks.
- The expected results and outcomes of the project based on the proposed tasks. The expected outcomes should be clearly stated, measurable, appropriate, and achievable within the project constraints.
- Summary of deliverables and reporting tasks, including quarterly progress reports, invoices, a final report, and a post-completion report.

6. Materials, Methods, and Scientific Merit

The proposed approach, procedures, and methods used should be innovative for the research field, original ideas, clearly defined, suitable for the proposed research, and feasible to accomplish within the project constraints (budget, schedule, project team, etc.). Equipment and materials for the proposed project should be identified and described. Obvious alternatives to the proposed equipment and materials must be addressed and justification of chosen materials provided where necessary. The proposal may include a brief description of supporting studies, data, and resources for the project to ensure implementation of the proposal is based on sound scientific and technical principles.

7. Schedule

Provide a schedule for implementation of the project showing the sequence of tasks and timing. The schedule should be detailed and specific. The schedule must show the start and end dates as well as milestones for each task and should be formatted in a horizontal bar or Gantt chart. The schedule should also illustrate dependencies on preceding tasks by showing appropriate linkages. The schedule must be consistent with the task breakdown and the budget. Time

required for compliance with CEQA, NEPA, and other environmental laws should be included in the schedule. An assumed end date of the grant agreement will not be established by DWR, instead applicants must include a reasonable estimate of the end date, based on their project, including time for any final reports and invoicing. Dates for the submission of quarterly progress reports, a final report, and post-completion report should be included. Assume a realistic start date for your proposed project no sooner than June 2015, and anticipate a maximum 2-year performance period. The schedule must indicate readiness to start the project when funding becomes available.

8. Budget

The budget should include a narrative and a tabular summary of project costs. This section of the proposal should serve as a budget summary section, while the task breakdown should include detailed explanation of the task item costs and documentation of costs and billing rates.

The tabular cost estimate should be organized by task breakdown and should indicate a funding source for the costs attributed to each task. Subtasks and their relative costs should also be included, if applicable. Consistency with the work items shown in the task breakdown should be apparent. The funding source breakdown included in the budget table should indicate costs from the following types of sources: grant amount requested, cost share (if applicable), federal contribution, in-kind contributions, and other contributions. A column indicating total project cost should also be included.

The grantee will present the budget summary tables in a way that best conveys the project costs. The narrative that accompanies the budget tables should provide an overview of the budget and a description of any significant components of the budget that require explanation.

9. Deliverables

Mandatory grant reporting tasks include the submittal of quarterly progress reports, invoices, a final report, and a post-completion report. Other additional deliverables may be applicable to the project, including technical studies, technical memorandums, and other documents useful for reporting the progress of the project. Provide a discussion of proposed project deliverables, proposed timelines for the deliverables (the schedule may be referenced), and other deliverables if appropriate to the project.

Attachment 3 – Eligibility Requirements

Certain applicants and project types require submittal of eligibility documentation. The Eligibility Checklist below may be used as a tool to help determine whether an applicant or a project requires completion and submittal of eligibility documentation. **If documentation is required to prove eligibility for any of the items listed, the documentation must be provided in the grant application.** Some documentation may require explanation or a narrative so as to provide sufficient information for DWR staff to determine if eligibility is met. If the criterion applies to the grant applicant, grant applicants should include a narrative for each of the eligibility requirements below. If DWR determines that the applicant does not have the authority to enter into a grant agreement with the State, the applicant will not be eligible for funding and the application will not be reviewed.

Eligibility Checklist		
Applicable?		
Yes	**No**	**Eligibility Criteria**
Local Agency Certification		
☑	☐	1) Local Agency: The applicant must provide a written statement (and additional information if noted) containing the appropriate information outlined below: - Is the applicant a local agency as defined in CA Water Code §78640(b)? - What is the statutory or other legal authority under which the applicant was formed and is authorized to operate? - Does the applicant have legal authority to enter into a grant agreement with the State of California? - Describe any legal agreements among partner agencies and/or organizations that ensure performance of the proposal and tracking of funds.
☐	☐	2) Basin Plan: Is each project consistent with a Regional Water Quality Control Plan (Basin Plan)?
Urban Water Suppliers		
☐	☐	3) Urban Water Suppliers: List the urban water suppliers that will receive funding from the proposed grant. Please provide the agency name, a contact phone number and an e-mail address. Those listed must submit self-certification of compliance with CWC §525 *et seq*. and AB 1420 (links to appropriate forms in Appendix A).
☐	☐	4) Urban Water Suppliers: Have all of the urban water suppliers listed in #3 above submitted complete Urban Water Management Plans (UWMPs) to DWR? Have those plans been verified as complete by DWR? If not, explain and provide the anticipated date for having a complete UWMP.
Groundwater Projects/Users		
☐	☐	5) Groundwater Projects: Does the proposal include any groundwater projects or other projects that directly affect groundwater levels or quality? If so, provide the name(s) of the project(s) and list the agency(ies) that will implement the project(s).
☐	☐	6) Groundwater Projects: For the agency(ies) listed in #5 above, how has the agency complied with CWC §10753 regarding Groundwater Management Plans (GWMPs)?
☐	☐	7) Groundwater Users: List the groundwater users that will receive funding from the proposed grant. Please provide the agency/organization name, a contact phone number, and an e-mail address. If there are none, please indicate so and skip to #9.
☐	☐	8) Groundwater Users: Have all of the groundwater users, listed in #7 above met the requirements of DWR's CASGEM Program? http://www.water.ca.gov/groundwater/casgem/ If not, explain and provide the anticipated date for meeting the requirements.
Agricultural Water Suppliers		
☐	☐	9) Agricultural Water Suppliers: List the agricultural water suppliers that will receive funding from the proposed grant. Please provide the agency/organization name, a contact phone number and e-mail address. If there are none, please indicate so and go to #11.
☐	☐	10) Agricultural Water Suppliers: Have all of the agricultural water suppliers, listed in #9 above, submitted complete Agricultural Water Management Plans (AWMPs) to DWR? Have those plans been verified as complete by DWR? If the plans have not been submitted, please indicate the anticipated submittal date.
Surface Water Diverters		
☐	☐	11) Surface Water Diverters: List the surface water diverters that will receive funding from the proposed grant. Please provide the agency/organization name, a contact phone number, and an e-mail address. If there are none, please indicate so.
☐	☐	12) Surface Water Diverters: Have all of the surface water diverters, listed in #11 above, submitted surface water diversion reports to the State Water Resources Control Board in compliance with requirements outlined in Part 5.1 (commencing with §5100) of Division 2 of the CWC? If not, explain and provide the anticipated date for meeting the requirements.

The following text provides additional explanation of some of the eligibility requirements listed in the checklist.

All Applicants

- **Local Agency.** An eligible grant applicant must be a local agency, as defined by the CA Water Code §78640(b). As defined in the code, "local agency" or "agency" means any city, county, district, joint powers authority, or other political subdivision of the state involved with water management. As a political subdivision of the state, public universities, including the University of California, are considered to be a local agencies for this grant program.
- **Consistency with Regional Water Quality Control Plan (Basin Plan).** Projects should be consistent with the area Basin Plan. This means that all projects must not contradict the goals and intentions of the Basin Plan, and must support the beneficial uses of water prescribed in the plan.

Urban Water Suppliers

- **Urban Water Management Planning Act (UWMPA) Compliance.** Water suppliers who were required by the UWMPA (CWC §10610 et seq.) to submit an Urban Water Management Plan (UWMP) to DWR must have submitted a complete UWMP to be eligible for State funding. Applicants and project proponents that are urban water suppliers and have projects that would receive funding through the Drainage Reuse Grant Program must have a 2010 UWMP that has been verified as complete by DWR before a grant agreement will be executed.
- **Best Management Practice (BMP) Compliance.** Assembly Bill (AB) 1420 (Stats. 2007, Ch. 628) conditions the receipt of a water management grant or loan by urban water suppliers upon the implementation of water demand management measures described in CWC §10631. DWR has determined that implementation of the California Urban Water Conservation Council (CUWCC) BMPs will fulfill the requirements of AB 1420. An urban water supplier may be eligible for a water management grant or loan if the urban water supplier demonstrates that BMPs have been implemented or scheduled, or are in the process of being implemented or scheduled. Urban water suppliers applying to use grant funds for implementation of BMPs must ensure they have submitted all the necessary information. Therefore, urban water suppliers who are applicants or project proponents in a grant application must supply additional information via a self-certification form. A link to the self-certification form is provided in Appendix A. ***The self-certification form must be signed and submitted with the grant application to be eligible for funding.***
- **Water Meter Compliance.** CWC §529.5 requires any urban water supplier applying for State grant funds for wastewater treatment projects, water use efficiency projects, drinking water treatment projects, or for a permit for a new or expanded water supply, shall demonstrate that they meet the water meter requirements in CWC §525 et seq. Water meter requirements apply to State Water Project contractors, Central Valley Project contractors, local, community, and private water suppliers. Grant applicants must complete a self-certification form to certify that water meter compliance requirements are met. A link to the self-certification form is provided in Appendix A. ***The self-certification form must be signed and submitted with the grant application to be eligible for funding.***

Groundwater Projects Requiring Monitoring or Groundwater Users

- **California Statewide Groundwater Elevation Monitoring (CASGEM) Compliance.** CWC §10920 *et seq.* establishes a groundwater monitoring program designed to monitor and report groundwater elevations in all or part of a basin or subbasin. Information on the requirements of the CASGEM Program can be found here: http://www.water.ca.gov/groundwater/casgem/. The CASGEM requirements also limit counties' and various entities' (CWC §10927.(a)-(d), inclusive) ability to receive State grants or loans in the event that DWR is required to perform groundwater elevation monitoring functions pursuant to CWC §10933.5. Applicants and project proponents that are groundwater users must meet the reporting requirements of DWR's CASGEM program.
- **Groundwater Management Plan (GWMP) Compliance.** For groundwater projects or for other projects that directly affect groundwater levels or quality, ***the applicant or the project proponent responsible for such projects must self-certify*** that either:
  - They have prepared and implemented a GWMP in compliance with CWC §10753.7;
  - They participate or consent to be subject to a GWMP, basin-wide management plan, or other IRWM program or plan that meets the requirements of CWC §10753.7(a);
  - The proposal includes development of a GWMP that meets the requirements of CWC §10753.7 and will be completed within one year of the grant application submittal date; or
  - They conform to the requirements of an adjudication of water rights in the subject groundwater basin.

Agricultural Water Suppliers

- **Agricultural Water Management Plan (AWMP) Compliance.** Beginning July 1, 2013, an agricultural water supplier is not eligible for a water grant or loan awarded or administered by the State unless the supplier complies with Senate Bill (SB) x7-7 water conservation requirements outlined in CWC Division 6 Part 2.55 (commencing with §10608). Applicants and project proponents that are agricultural water suppliers must prepare and adopt an AWMP and comply with submission requirements. Specific requirements for Agricultural Water Management Planning are described in CWC Division 6 Part 2.8 (§10800). A link to the compliance requirements of SBx7-7 is provided in Appendix A.

Surface Water Diverters

- **Surface Water Diversion Reporting Compliance.** Beginning January 1, 2012, a diverter of surface water is not eligible for a water grant or loan awarded or administered by the State unless it complies with surface water diversion reporting requirements outlined in CWC Division 2 Part 5.1 (commencing with §5100). Applicants and project proponents that are surface water diverters must submit surface water diversion reports to the State Water Resources Control Board (SWRCB); SWRCB is the responsible entity for tracking the diversion reporting requirement. DWR will confer with SWRCB to determine eligibility of applicants for this provision; *no additional material applicants is needed for approval.*

Research and Sponsored Programs

The Corporation will administer grants and contracts on behalf of the University under the following conditions:

1. Grant and contract activity shall include research, public service, and educationally related project proposals and awards involving federal, state, municipal, or county agencies, public or private corporations, private foundations, and/or individuals. When such grant or contract provides for direct funding, use of University facilities or resources, and/or endorsement by the University, then approval as herein described is required.

2. All applicable laws, regulations, rules, policies, and practices shall be satisfied prior to acceptance of the grant or contract issue.

3. Grant and contract proposals shall be reviewed by the project director's department chair, or organizational unit director, as appropriate.

4. The Associate Vice President for Research and Sponsored Programs shall administer the submission and approval of grants and contracts. It shall be the responsibility of the California State University, Fresno Research and Sponsored Programs Office to: ensure that appropriate project clearance(s) and approval(s) are obtained from California State University, Fresno organizational units which might be affected thereby prior to final approval and submission of a proposal), in collaboration with the project director involved; assume responsibility for negotiating any terms and conditions that differ substantially from those initially proposed; and keep all University units affected fully informed as to these negotiations.

5. All grants or contracts are to be accepted in the name of the Foundation, whereupon the Foundation business office shall contact individuals and/or organizational units affected by the award.

6. The Secretary of the Foundation, the Chief Financial Officer of California State University, Fresno or his or her designee, the Director of Foundation Financial Services, the Executive Director of the Foundation, and the Associate Vice President for Research and Sponsored Programs of California State University, Fresno, any two acting together, are hereby authorized to execute any contracts or subsequent amendments, with any governmental or non-governmental agencies or organizations as may be necessary in order to carry out the purposes referenced in this resolution, and that any prior resolutions in conflict herewith are hereby superseded.

Approved by the California State University, Fresno Foundation Board of Governors on June 4, 2009.

Attachment 2 – Project Proposal and Task Breakdown

1. **Title of Project:**

   Optimal Use of Vapor Compression Desalination in Conjunction with Ion Exchange for the Treatment of Agricultural Drainage Water

2. **Principal Investigator/Cooperator(s) and Project Management**

Project Manager

Dr. David Zoldoske
6014 N Cedar Avenue
Fresno. CA 93710
Email: davidzo@csufresno.edu
Telephone: 559-278-2066 (Work)
FAX: 559-278-8655
Qualifications: Dr. Zoldoske is the director of the California Water Institute, the Center of Irrigation Technology, and the International Center for Water Technology. His bio is attached.
Role: Dr. Zoldoske has day-to-day contact with the Project Manager and the Principal Investigator and overall responsibility of grants and contracts awarded to his Institute and Centers.

Project Director

Dr. Karl Longley
6014 N Cedar Avenue
Fresno. CA 93710
Email: karll@csufresno.edu
Telephone: 559-278-8658 (Work): 209-873-0630 (Mobile)
FAX: 559-278-8655
Qualifications: Dr. Longley is a researcher and water resources contract and grant coordinator for the California Water Institute. He is also a member and chair of the Central Valley Regional Water Quality Control Board. Dr. Longley's bio is attached.
Role: Dr. Longley is responsible for executing the grant agreement and any amendments, approving invoices for the project, and for providing oversight of the project work plan and its associated timelines.

Project Principal Investigator

Professor Walter Mizuno
Department of Mechanical Engineering
Lyles College of Engineering
2320 E. San Ramon Avenue, M/S EE94
Fresno, CA 93740-8030
Email: walterm@csufresno.edu
Telephone: (559) 278-5597 (Work); (559) 977-8577 (Mobile)
FAX: (559) 646-3554
Qualifications: Professor Mizuno is a member of Fresno's State mechanical engineering faculty. He has both academic and applied experience designing and operating heat transfer processes. His bio is attached.

Role: Professor Mizuno will be responsible for providing enhanced Fresno State Vapor Compression Unit (VCD unit) design and the conduct of the day-to-day VCD unit operation and data reporting.

Institutional Capacity

California State University, Fresno houses several research and education water centers for which Dr. Zoldoske is the Director. These are the Center for Irrigation Technology (CIT), the International Center for Water Technology (ICWT) and the California Water Institute (CWI).

Since 1980, CIT has served as an independent testing laboratory, applied research facility, and educational resource. It is the only independent laboratory in the United States specializing in testing and evaluating irrigation equipment and plays a leading role in the development of national and international standards for irrigation equipment and testing procedures. CIT irrigation and engineering specialists offer seminars, workshops, study tours and customized training programs to domestic and international clients.

ICWT is a public-private partnership dedicated to the development and application of advanced technologies that enhance agricultural, environmental and urban water use. The ICWT laboratory is housed in the Water, Energy & Technology (WET) Center and features an 8,400-square-foot testing laboratory, including a 30,000-gallon, 28-foot-deep water chamber capable of testing pumps of up to 300 horsepower. ICWT supports the development of technologies that address water supply and quality; flood protection; and environmental enhancement. Since 2001, ICWT has provided information to the agricultural, environmental and urban sectors that plays a role in policy development, technological innovations, and resource management strategies.

CWI is an academic center of excellence for research, education and policy analysis of issues involving water resources, including water quality and integrated regional water management planning. CWI was founded in 2000 to be a forum for unbiased, open, collaborative discussion, research and education on water-related issues benefiting the entire state. Administrative staff oversees research and activities that enhance and preserve California's water resources and quality. Activities include assisting in policy development, working with disadvantaged communities on water issues, conducting applied research and watershed studies and developing water resource management strategies. Staff members present workshops and symposia, provide analysis on water issues, and develop and present educational materials related to water use.

The three centers employ 19 full-time and staff as well as 50 student research positions.

Combined research and testing facilities include over 20,000 square feet of state-of-the-art laboratory space and the 1,050-acre University Agricultural Laboratory (UAL) which includes acreages of pistachios, olives, several citrus varieties, as well as peaches, nectarines and other specialty crop tree fruits and nuts. A building adjacent to the WET center at the corner of Barstow and has been identified as a suitable site for the project's VCD unit since the unit will be provided secure shelter and have access to 440 volt, 3-phase electricity and very adequate space is available directly adjacent to the building for tanks for feed water, product water and brine.

Project Management Plan

Time allocations for attainment of objectives and delivery of products are shown in Tables 4 and 5 and fully meet the time requirements for the project. The primary members of the project team are located at Fresno State and have a documented history of working together effectively including scheduled meetings on at least a bi-weekly basis to share data and review project progress. These meetings are in addition to the routine text, email and telephone communications among the team members. Primary team members have been responsible for the successful completion of numerous projects in the past.

3. Scope of Work and Project Description

Project Goals and Objectives

The **overall goals and objectives** of the project, *Optimal Use of Vapor Compression Desalination in Conjunction with Ion Exchange for the Treatment of Agricultural Drainage Water*, are to evaluate and demonstrate the application of this technology for the efficient treatment of agricultural drainage water resulting in a high quality product stream and a highly concentrated brine stream suitable for transport to a marine disposal site and/or processing for the production of marketable salts, acids and bases.

The **specific goals and objectives** for this initial phase of the project (Phase 1) is to evaluate the efficacy of the VCD unit for the treatment of a sodium chloride feed stream from an ion exchange (IX) unit and the use of the VCD unit brine stream, a concentrated sodium chloride brine, for regenerating the anion resin of an IX unit.

Background

The Central Valley Regional Water Quality Control Board is now developing a salinity management plan (Cozad, 2008) that will be incorporated into the basin plans for the Tulare Lake Basin and the Sacramento-San Joaquin Basin in about two years. This effort will be followed by an implementation plan focused upon eventually bringing the subject water basins into compliance with salinity objectives in both surface and ground waters. Obtaining compliance will require a number of measures including capturing and concentrating salt for other uses or for movement out of the Central Valley.

Usually a brine stream from a desalination process in coastal areas can be discharged to a marine environment, brine streams from desalination processes in inland areas treating brackish water, such as agricultural drainage water, must include in their operating costs the costs for brine disposal. Brine disposal costs in inland areas can be as much or more than the cost incurred by the desalination process that produced the brine. An advantage of the IX-VCD process, is that it can directly produce very concentrated brine stream that can be the feed stream to other processes that produce products such as marketable salts, bases and acids.

The primary viable option that is being extensively evaluated for concentrating salt from brackish waters is variations of the application of reverse osmosis technology. Important drawbacks to the use of reverse osmosis technology are the membrane fouling issues that are particularly severe with Central Valley waters due to presence of salts with low solubility

relative to sodium chloride, the primary salt encountered in the desalination of seawater; the high energy costs incurred with the operation of the reverse osmosis process; and, the disposal of the brine stream.

Another option requiring further evaluation is the use of a VCD unit and an IX unit with the VCD treating the stream containing the high sodium chloride concentration from the IX unit and further concentrating it so that it is suitable for regenerating the IX resin. IX is a well-developed process used for many decades for water treatment, particularly for the removal of minerals from water that cause water hardness. This use of the IX process is generally referred to as water softening. When IX is used for treating agricultural drainage water it produces one water stream that is the product water (it has a high sodium chloride concentration due to the ion exchange of the native salts in the IX unit), and the second water stream is the brine stream consisting of concentrated native salts from the agricultural drainage water. The sodium and chloride ions in the product water from the IX unit can be used to regenerate the IX resins if they can be concentrated sufficiently. This recycles a sodium chloride brine stream that otherwise would require problematic disposal. An important object of this Phase 1 project is to evaluate whether or not the above described concentration of the sodium chloride in the IX product stream can be operationally and economically achieved by treating the IX product stream using VCD.

VCD is a technology that has been in use extensively and has undergone extensive development for use in recycling process waters from industrial processes such as petroleum refineries and alumina smelters (Lokiec, 2007). While VCD can produce water having a very high water quality, the process has suffered from relatively high operating and maintenance costs (Lara, et al, 2011).

A simple schematic of a VCD unit adapted from Burke (2006) is shown in Figure 1

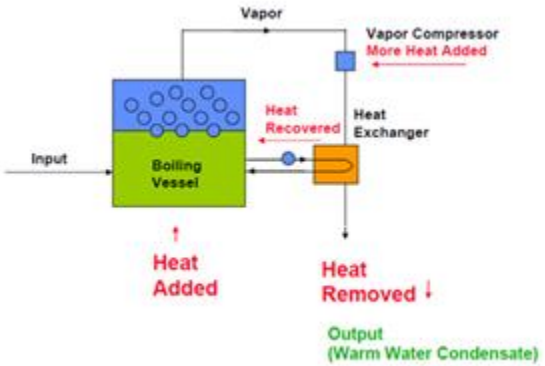

NOTE: Heat transfer for the conventional mechanical VCD unit shown in Figure 1 could be enhanced by recovering heat that otherwise would be wasted.

Figure 1.Conventional Vapor Compression Distillation (VCD) Model

The evaporators are preferentially operated at the minimum temperature as dictated by the boiling pressure resulting in a more effective heat transfer between the condenser and the evaporator.

A major problem with this technology is scaling within the VCD unit. Scaling on heated surfaces in contact with water reduces heat transfer and it can be controlled by the use of antiscalants and by treating the feed stream to the VCD unit by IX so the VCD unit is subjected mainly to the higher solubility sodium chloride salt.

Work has been carried out on a prototype VCD unit for desalinating agricultural drainage water. This unit, located at Red Rock Ranch on the western side of the San Joaquin Valley, was provided by the Department of Water Resources (DWR) and a report on its operation will be provided to DWR by Principal Investigators Longley and Mizuno during the first quarter of 2015. Though this unit, shown in Figure 2, could produce a high quality product stream with low conductivity and a highly saline brine stream, the unit was poorly designed and its deficiencies included heaters with insufficient output, an under designed vapor compression unit, and insufficient insulation to prevent heat loss to the environment from the VCD unit.

Project Description

Phase 1 of the project, will be carried out at the Fresno State building located adjacent to the WET Center where Proposition 204 funds will be used for construction, operation, and evaluation of the enhanced VCD unit. Construction costs will be reduced by utilizing some components of the existing Forever Water unit. The owner of the Forever Water unit, Westlands Water District, has given their consent to use the Forever Water unit for this purpose.

The Fresno State VCD unit (schematic shown at Figure 3) will be operated at a feed water flow rate of 1,000 gallons per hour for the purpose of optimizing the system performance using tap water spiked with sodium chloride to a TDS concentration of 10,000 mg/L. The product stream and the brine stream may be recombined for further VCD unit evaluation. Normal operation of the unit will involve two passes through the unit by collecting the brine from one run and using it as the feed water in a subsequent run to determine the concentration efficiency of a two run process. The final target TDS is in the range of 50,000 to 60,000 mg/L so that it may be used for IX unit resin regeneration.

Though limited remote operation of the VCD unit is possible through an internet connection, during this phase of the project focused on optimizing operation of the VCD unit, operator availability is a benefit for routine sampling and addressing operation issues. Hence, operating the unit at Fresno State provides a great savings in time and personnel costs relative to having several hours of travel time to and from a remote test site.

Phase 2 of the project will be the evaluation of an IX unit in series with the VCD unit at the Panoche Water District experimental site. For this evaluation native agricultural drainage water will be used as the feed water for the IX unit which, in turn, will provide a saline (high sodium chloride) feed stream to the VCD unit. An application is being made to the U.S. Bureau of Reclamation, and other funding sources as they are identified, for the funding of Phase 2 and more detail regarding the Phase 2 project is found at Appendix A of this proposal.

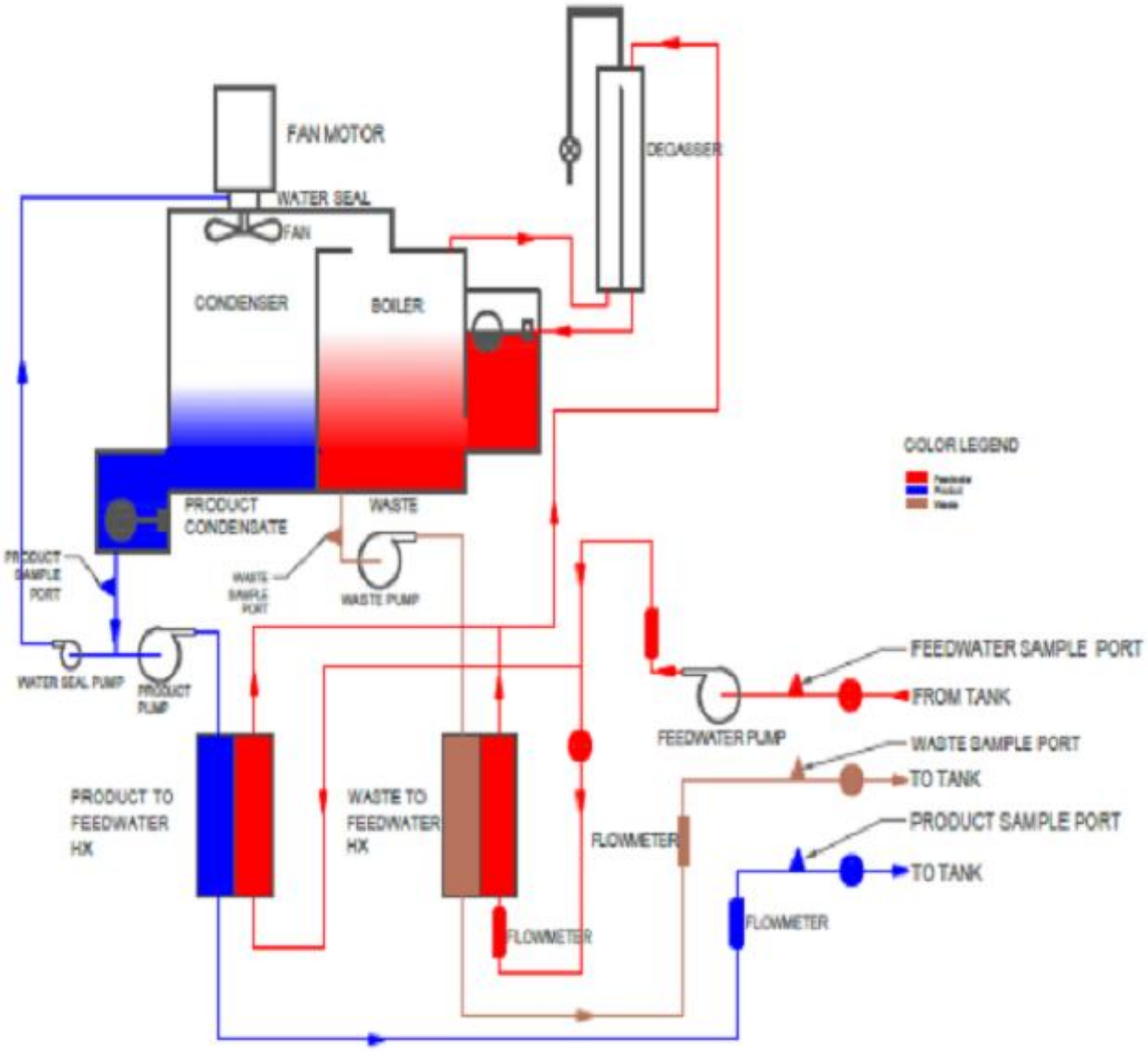

Figure 2. Forever Water Unit

This project consists of the construction, testing, and evaluation of the desalination and energy efficiency of the VCD unit as a function of energy requirements and the VCD unit's ability to produce a highly concentrated sodium chloride brine stream to be used for recharging the IX anion resin. The heat source for the VCD unit will be electrically energized heaters though conceptually natural gas, solar energy, or waste heat can be utilized as the heat source.

The project activities to develop and evaluate the Fresno State VCD unit include:

- Constructing the VCD unit and installing it at the test site located at Fresno State.
- Performing initial startup of the VCD unit and detecting, evaluating and resolving operational anomalies.
- Operating the VCD unit under selected test conditions using a saline (sodium chloride) feed stream in accordance with the schedule shown in Tables 1 and 5.
- Evaluating the data and preparing the reports including the final report with an emphasis on the use of the VCD unit to produce regeneration salt for an IX unit.

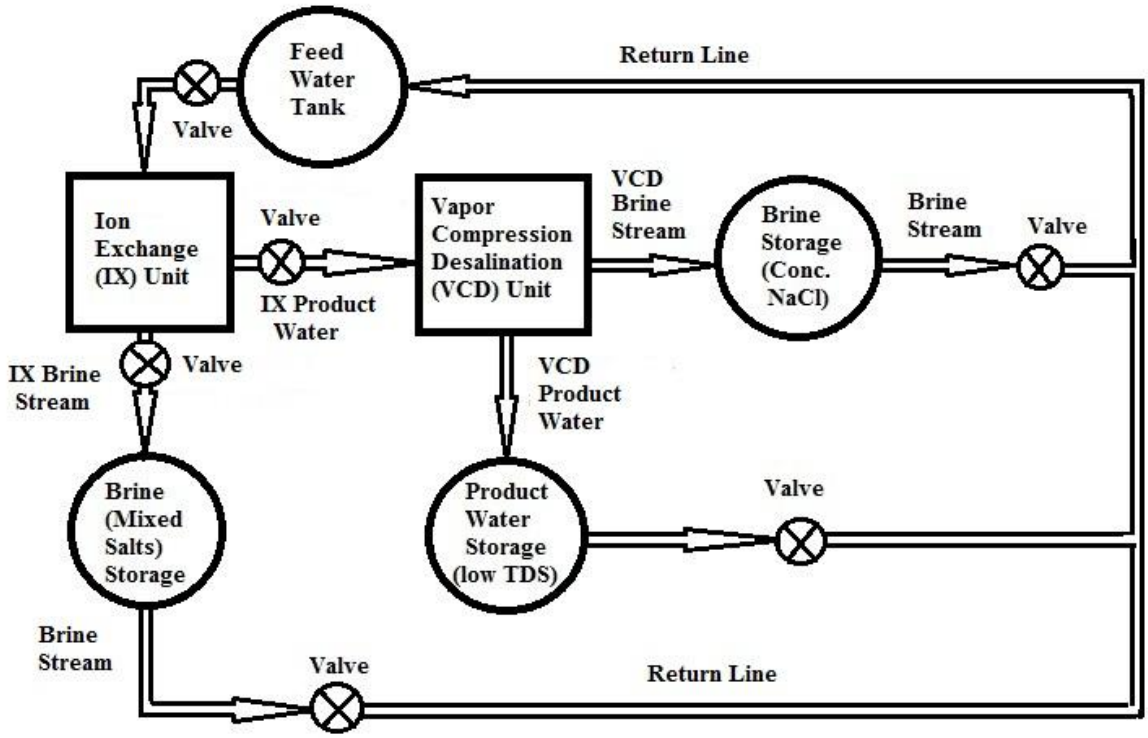

Figure 3. Flow Schematic for Phase 1, Evaluation of-VCD Desalination Unit

Table 1. Experimental Plan

Salt Recovery, %	Length of Experimental Runs, hours	Number of Experimental Runs	Start Up & Clean Up Factor	Total Experimental Run Time Rqd, hours
80	10	15	2	300
50	10	15	2	300
TOTAL, hours				600

Monitoring of VCD Unit Operation

On-site determination of conductivity will be made with a conductivity meter calibrated in accordance with manufacturer's instructions. Sample bottles will be cleaned and samples will be collected, transported, stored and analyzed in accordance with quality assurance requirements and analytical methods procedures set forth in Standard Methods (http://www.standardmethods.org/store/) or other accepted standards. Laboratory analyses will be conducted by a State of California approved laboratory

Samples will be collected of the feed water and directly of both the effluent from the condenser (product water) and the boiler water (brine stream). Samples will be taken in duplicate at the beginning of each run and every 30 minutes until the system stabilizes. Stabilization is considered to be ± 5% variation in results as determined by use of the conductivity meter and is expected to occur within 2 hours of the initiation of the run.

Results at the test site will be recorded manually and all data will be entered into an Excel data table.

4. Project Objectives and Program Priorities

The primary project objectives are to construct and successfully operate the VCD unit using a simulated sodium chloride feed water stream that has the characteristics of an ion exchange unit product water stream high in sodium chloride concentration after treating agricultural drain water having a quality similar to the waters shown in Table 2. The following are the overall treatment goals for the project:

- a product stream from the VCD unit having low salinity (≤ 350 mg/L TDS which is 70% of the EPA Secondary Standard for drinking water), and
- a sodium chloride brine stream from the VCD unit having a TDS of at least 50,000 mg/L to be suitable for backwashing and regenerating IX unit anion resin.

Table 2. Drainage Water Quality Comparison for Tulare Lake Drainage & Panoche Water District

Major Constituents	**Units**	**Concentration of Tulare Lake Drainage District Drainage Water**	**Concentration of Panoche Drainage District Drainage Water**
Bicarbonate	mg/L	430	161
Calcium	mg/L	240	113
Carbonatge	mg/L	<1	0
Chloride	mg/L	430	3,386
Magnesium	mg/L	270	309
Nitrate (as N)	mg/L	Not Reported	179
Potassium	mg/L	12	23.7
Silica	mg/L	20	6.7
Sodium	mg/L	3,200	5,750
Sulfate	mg/L	4,500	4,853
TDS	mg/L	10,500	14,828
pH	mg/L	8.1	7.4

The program priorities that the operational VCD unit meets with the completion of Phase 1 is shown in Table 3 below:

Table 3. Project Priorities

Category	**Project Examples** (Numbering is same as used in Guidelines and Proposal Solicitation Package)
Drainage Reuse	(2) Evaluating the technical and economic feasibility of establishing, operating, and monitoring drainage reduction and reuse systems. (3) Developing alternative opportunities to reuse drainage water.
Drainage Treatment and Salt Separation/ Utilization	(12) Developing sustainable and environmentally acceptable methods to concentrate and harvest salts and potentially toxic elements from drainage water. (13) Developing viable desalination technologies for subsurface agricultural drainage water and brackish groundwater underlying drainage-impaired lands.

5. Task Breakdown

The project task descriptions and schedule of the Phase 1 project to be carried out at Fresno are shown in Table 4.

Table 4. Project Task Descriptions and Schedule, Phase 1 (Fresno State)
Proposition 204 Funding

Reporting Task and/or Action	Dates	Personnel	Materials & Supplies	Total Cost	Performance Measure and Other Supporting Information
Materials Acquisition	6/1/15 – 8/31/15	$1,600	$83,665	**$85,265**	Includes metal for fabrication, storage tanks, and heat exchanger. Performance measure is material is on hand.
Move Forever Water Unit to Fresno State & Install	6/1/15 – 6/30/2015	$1,200	$2,500	**$3,700**	Forever Water unit is at Fresno State, in place and electrical connections are available
VCD Unit Reconstruction	6/30/15 -- 12/31/2015	$28,100	$42,000	**$75,100**	VCD unit has been modified with leak proofing, enhanced heating and pressurization capability
VCD Unit Shakedown	1/1/2016 -- 3/31/2016	9,100	$3,000	**$7,100**	VCD unit is ready for experimental runs
VCD Unit Test Operation	4/1/2016 – 7/31/2006	40,000	$5,000	**$45,000**	Experimental runs in accordance with the experimental schedule (Table 5)
Travel		4,000	$3,360	**$7,360**	Initial trips to Red Rock Ranch for transport of Forever Water unit.
Supplies and Laboratory Analyses		300	$26,000	**$26,300**	Includes $21K Lab Costs ($150 ea @ BSK). Performance measure is satisfactory analyses performed and supplies on hand.
Software		300	$12,400	**$12,700**	Software is for design of VCD system. Performance measure is software is on hand.
Test Site Decommissioning		1,800	$1,000	**$2,800**	Site restored for use by future projects.
Quarterly Reports	8/31/2015 & Every Qtr Thereafter	$2,050	$100	**$2,150**	Report submission
Final Report	2/28/17: Draft Final 5/31/17 Final Report	$4,970	$100	**$5,070**	Report submission

Table 4 (Continued). Project Task Descriptions and Schedule, Phase 1 (Fresno State)
Proposition 204 Funding

Reporting Task and/or Action	Dates	Personnel	Materials & Supplies	Total Cost	Performance Measure and Other Supporting Information
Workshop	May-17	$3,000	$2,800	**$5,800**	Presents results, conclusions and recommendations on VCD unit operation. Also provides overview of use of solar energy for energy source for desalination operations for VCD, RO and other relevant technologies.
Total Cost Less Fringe or Overhead		$96,420	$181,925	$278,345	Project start up and successful completion on time
Fringe		$11,200			
Overhead, 5%			$9,096		
Total Personnel & Fringe		$107,620			
Total Other & Overhead			$191,021		
Grand Total, Project				$298,641	

6 Materials, Methods, and Scientific Merit

Except for reverse osmosis treatment, little scientific literature is available specific to removing agricultural drainage water salinity. Since both IX and VCD are technologies used successfully for other applications, information on their efficacy and economics for the treatment of agricultural drainage water is important for the future reclamation of these waters. Saline agricultural drainage waters that significantly reduce agricultural production, are costly to reclaim for domestic drinking water use, but may provide important mineral products than can partly offset the expected costs of a combined IX and VCD treatment process.

The materials required for the project are IX units and the VCD unit that is to be modified from the existing Forever Water unit through optimized heating, heat recovery, increased condensing pressure, and minimizing heat loss through better insulation.

These units are equipped with critical controls operated by telemetry so that remote operation is possible thereby decreasing personnel costs while maintaining operational integrity. Certain critical parameters are continually monitored and the data is relayed by telemetry to a computer that is routinely backed up and is located at Fresno State.

Testing methods are in accordance with the latest edition of *Standard Methods for the Examination of Water and Wastewater*.

7. **<u>Schedule</u>**. The project schedule is shown below and defining information regarding individual tasks is found in Table 4. This project will commence with the receipt of Project 204 funding.

Table 5, Tasks and Time Schedule Gantt Chart

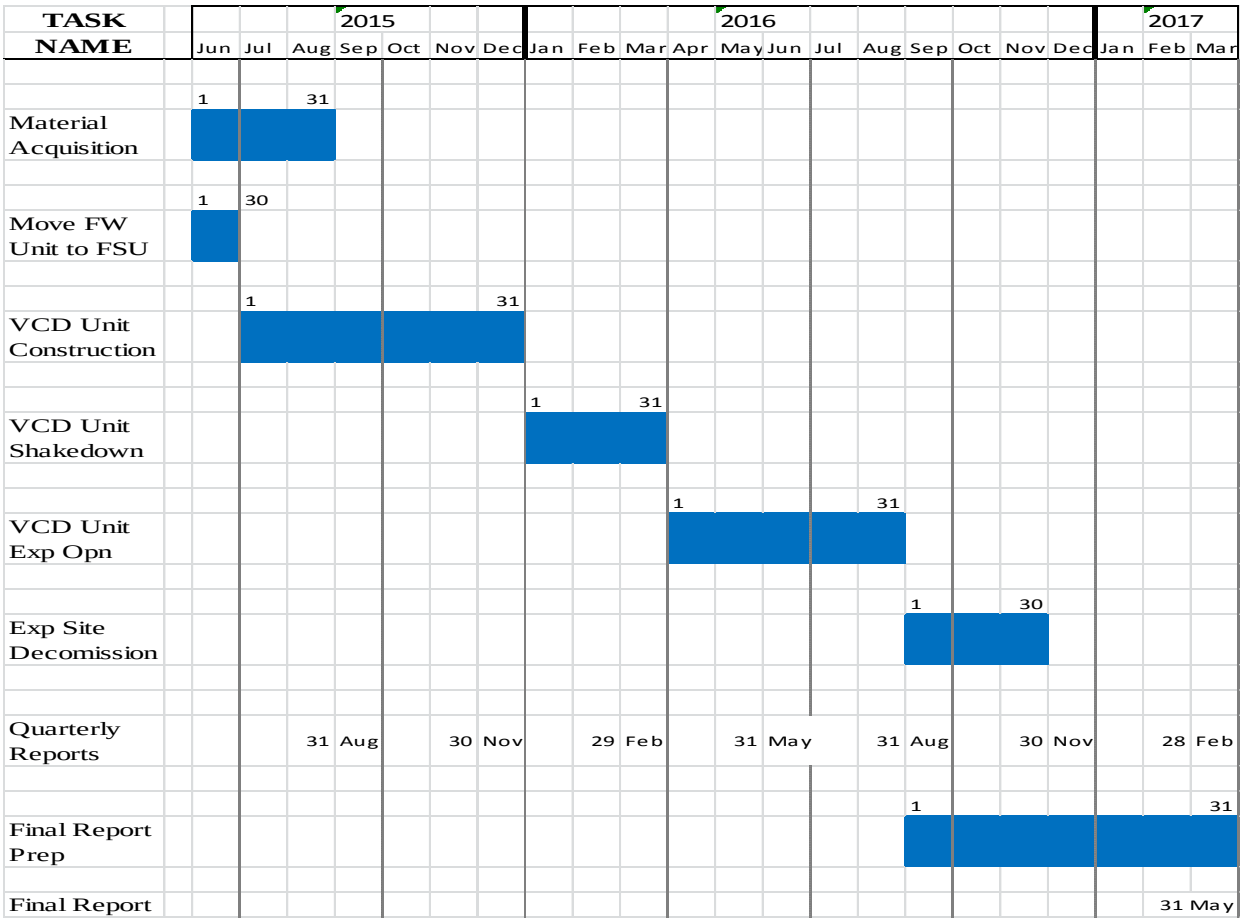

The tasks shown in Table 5 do not require determination of compliance with CEQA since all the experimental work is to be carried out in a closed loop system with no discharge.

8. **<u>Budget</u>**

The project budget is shown in Table 6 and task breakout with assigned budgets is shown in Table 4.

Table 6, Project Budget

Personnel Wages				
		1st Year	***2nd Year***	***Total***
Subtotal Senior Personnel Salaries		***$36,960***	***$36,960***	***$73,920***
Subtotal Student Salaries		***$11,250***	***$11,250***	***$22,500***
Subtotal ALL Personnel		**$48,210**	**$48,210**	**$96,420**
Fringe Benefits (5% increase in Workers Comp)				
Subtotal Fringe Benefits		***$4,841***	***$5,600***	$11,200
TOTAL SALARY & FRINGE BENEFITS		**$53,810**	**$53,810**	**$107,620**
Travel	6000 miles @ $0.56 per mile			
Local Travel		$1,680	$1,680	$3,360
Subtotal Travel		**$1,680**	**$1,680**	**$3,360**
Other Direct Support				
(1) Materials & Supplies	Office Supplies	$17,565	$3,500	$21,065
	Chemicals	$2,000	$3,500	$5,500
(2) Laboratory Costs		$10,500	$10,500	$21,000
(3) Equipment		$122,000	$9,000	$131,000
Subtotal Other		**$152,065**	**$26,500**	**$178,565**
I. Total Direct Costs		**$153,745**	**$28,180**	**$181,925**
J. Indirect Costs	Rate (TDC): 5.0%	**$7,687**	**$1,409**	**$9,096**
K. Total Proposed Costs		**$215,242**	**$83,399**	**$298,641**

9. Deliverables

Deliverables will include an operational VCD unit optimized for desalination of brackish waters and an engineering report describing the system, its operation, economics, and application for the treatment of agricultural drainage water. The schedule for the submittal of deliverables is shown in Table 7.

Table 7, Project Deliverables

	Date								
Reporting Task	6/1 2015	8/31 2015	11/30/ 2015	2/29/ 2016	5/31/ 2016	8/31/ 2016	11/30 2016	2/28/ 2017	5/31/ 2017
Project Start	**X**								
Quarterly Report		**X**	**X**	**X**	**X**	**X**	**X**	**X**	
Annual Report					**X**				
Draft Final Report								**X**	
Final Report									**X**

9. References

Cozad, D., June 2008. *Salinity Strategy Management Report*, prepared for the Central Valley Regional Water Quality Control Board by Integrated Management, Inc.

Lokiec, F and A. Ophir, 2007. *The Mechanical Vapor Compression – 38 Years of Experience*. Presentation at the IDA World Congress – Maspalomas, Gran Canaria, Spain (Ref: IDAWC/MP07-084).

Lara, J.R., O. Osunsan, and M.T. Holtzapple, 2011. *Advanced Mechanical-Vapor Compression Desalination System*, Desalination, Trends and Technologies, Michael Schorr (Ed.), ISBN: 978-953-307-311-8, InTech.

American Public Health Association, American Water Works Association, and the Water Environment Federation, *Standard Methods for the Examination of Water and Wastewater*, http://www.standardmethods.org/store/)

APPENDIX A.

Phase 2 **(Unfunded)** for the Project, "Optimal Use of Vapor Compression Desalination in Conjunction with Ion Exchange for the Treatment of Agricultural Drainage Water"

Introduction

Phase 1 of the project, "Optimal Use of Vapor Compression Desalination in Conjunction with Ion Exchange for the Treatment of Agricultural Drainage Water," is the subject of the preceding proposal that has been submitted to DWR for consideration fot the award of Proposition 204 funds.

Phase 2 of the project will be the evaluation of the ion exchange (IX) unit and the operation of the IX unit and the vapor compression desalination (VCD) unit in series at the Panoche Water District experimental site. Funding for this work will be sought from the U.S. Bureau of Reclamation and other funding sources as they are identified.

Native agricultural drainage water available at the Panoche Water District experimental site will be used as the feed water for the IX unit which, in turn, will provide a product stream to the VCD unit. The product stream of the IX unit consists of very saline water where the salinity is almost entirely due to its sodium chloride concentration. The product water from the VCD unit will have very low salinity and can be used for either agricultural or domestic water supply. The brine from the IX unit will consist primarily of the native salts in the feed water to the IX unit, and the brine from the VCD unit will have a very high sodium chloride concentration and will be recirculated to the IX unit to recharge the unit's resin. Important features of this work include:

- An IX unit will be evaluated for its economy and efficiency for producing a brine stream from agricultural drainage water having a high concentration of native salts. Highly concentrated brine streams may –

    a. provide for less costly transport of salt to a marine environment where safe final disposal is carried out in accordance with federal Clean Water Act and California Water Code requirements, or

    b. be used for the direct production of marketable acids, bases and salts possibly by an electrochemical technology.

The product water from the IX process for the process to be considered for future use must have a high level of sodium chloride salinity resulting from the IX process and it must contain negligible mineral constituents other than sodium and chloride from the drainage water.

At the end of Phase 2, the operation of the IX and VCD unit in series will be terminated and the VCD unit may be operated with agricultural drainage water used directly as feed water with antiscalants introduced to determine the length of time sustained operation can be achieved using antiscalants and/or other scale prevention measures.

Project Objectives and Program Priorities

The primary project objectives of Phase 2 are to construct and operate optimal IX and VCD units in series with the feed water to the IX unit being brackish agricultural drainage waters. The following are the overall treatment goals for the unfunded Phase 2 project:

- minimal energy loss from the VCD unit achieved through enhanced heat transfer and minimizing losses,

- a product stream from the IX unit having high sodium chloride salinity with negligible leakage of other native drainage water mineral constituents, and
- a brine stream from the IX unit of very high salinity consisting of a mixture of native salts that is a suitable for minimizing transport costs if discharged at a marine site and/or for producing marketable acids bases and salts.

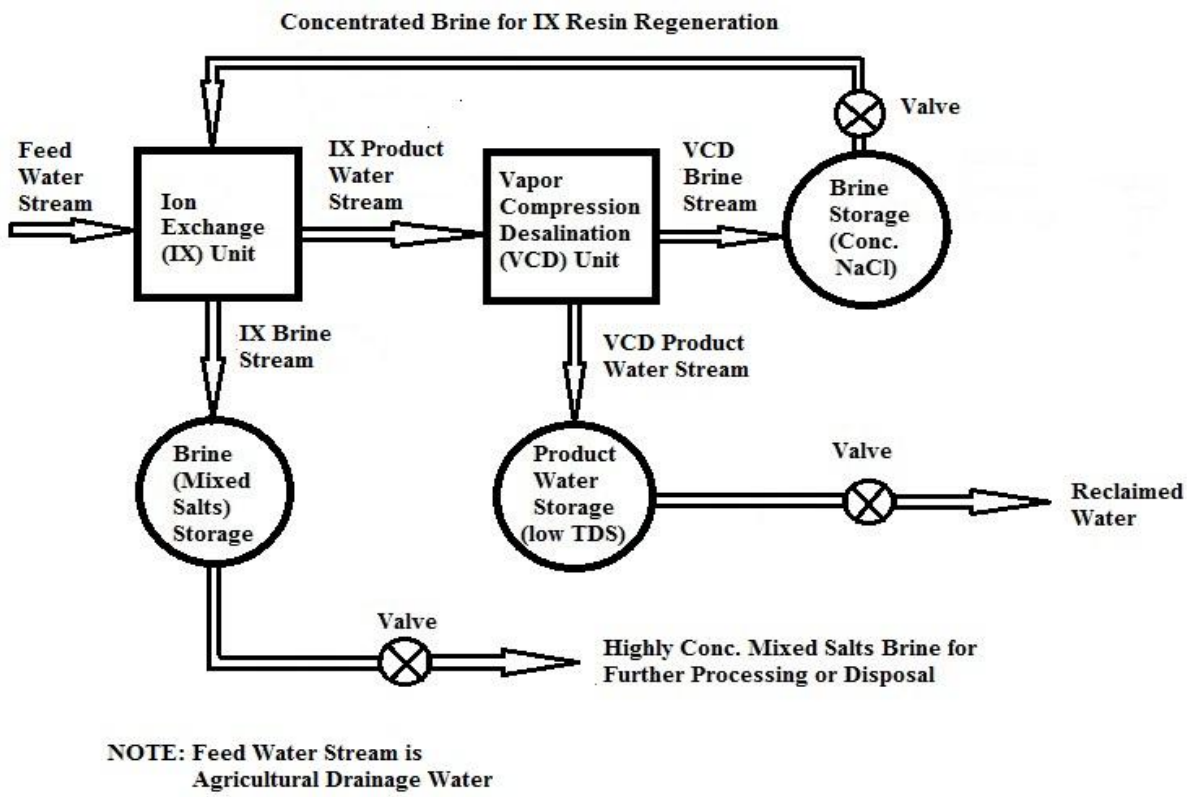

Figure A-1. Flow Schematic for Phase 2, Evaluation of-IX-VCD Desalination

Project priorities, as set forth in the Department of Water Resources' Proposition 204 proposal solicitation materials, are shown in Tables A-1 and A-2. The successful completion of Phases 2 is essential to seek funding for work focused on the recovery of salts for beneficial uses and meeting the objectives set forth in Table A-2.

Table A-1. Project Priorities

Category	**Project Examples** (Numbering is same as used in Guidelines and Proposal Solicitation Package)
Drainage Reuse	(2) Evaluating the technical and economic feasibility of establishing, operating, and monitoring drainage reduction and reuse systems. (3) Developing alternative opportunities to reuse drainage water.
Drainage Treatment and Salt Separation/ Utilization	(12) Developing sustainable and environmentally acceptable methods to concentrate and harvest salts and potentially toxic elements from drainage water. (13) Developing viable desalination technologies for subsurface agricultural drainage water and brackish groundwater underlying drainage-impaired lands.

Table A-2. Future and Unfunded Project Priorities

Category	**Project Examples** (Numbering is same as used in Guidelines and Proposal Solicitation Package)
Market Development	(10) Developing markets for harvested salts from drainage water.
Drainage Treatment and Salt Separation/ Utilization	(14) Utilizing concentrate from desalination processes for recycling of valuable salts, such as gypsum, sodium sulfate, magnesium, and calcium chlorides, etc.