Appendix C. Technical Description of Temporary Fish Passage During Construction of Willow Slough Weir

Temporary fish passage for upstream migrating Spring-run Chinook and Fall-run Chinook will be provided during construction at Willow Slough Weir (figure C1). Temporary fish passage will be achieved using three components:

- An existing 50' long culvert which leads from the EBC to a side channel in Willow Slough
- A 25' long resting pool created by a sheetpile cofferdam that backwaters the entire existing culvert
- A 32' long Denil fish ladder at a 20% slope which connects the side channel in Willow Slough to the resting pool upstream

The Existing 50' long culvert is set at a low slope, made of concrete, and has a diameter of 5'. When this culvert is backwatered, it will provide an adequate passage corridor for adult salmonids.

The 25' long resting pool will be deep enough, wide enough, and long enough to provide sufficient resting area for adult salmonids.

The Denil fish ladder is a common design used to pass migrating salmonids upstream. A Denil fish ladder style was chosen because of cost and timing constraints. The temporary Denil ladder will perform similar to the existing Denil fish ladder that is being replaced with a more site-suitable Pool and Chute fish ladder.

Figure C1 – Longitudinal Profile of Temporary Fish Passage Structure

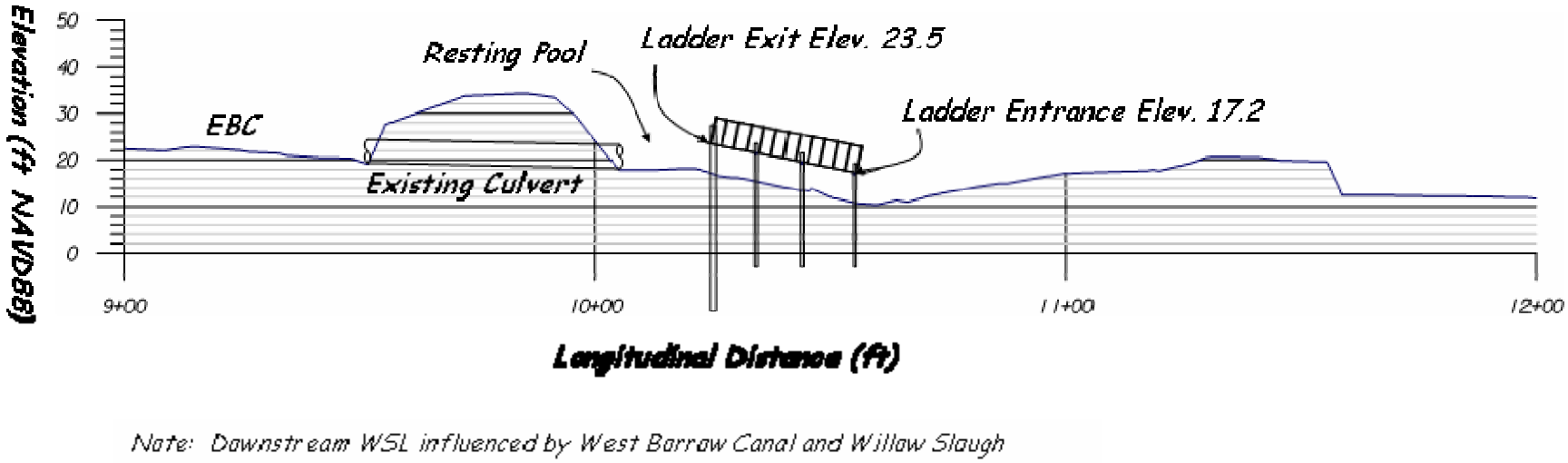

DWR engineers met with NOAA Fisheries and DFG personnel on October 30, 2007 to identify constraints on the proposed temporary fish passage design. The following constraints were identified:

- Velocity in 50' long existing culvert must be less than 6 fps.
- Length of Fish Ladder should be < 50'
- Invert elevation of Fish Ladder at fish entrance should allow for low water entrance to ladder
- Resting Pool Size should be sufficient in area to provide rest after passing Denil fish ladder and before passing existing culvert

Velocity

Flow through the existing culvert must maintain an average velocity of less than 6 fps. Velocity criteria will be met by setting the constructed weir crest at the appropriate elevation to achieve the necessary differential of head elevation. Water surface levels in the EBC are variable, so the weir crest will be set at a conservative elevation. This method will keep velocities in the culvert under 6 fps except when extremely high elevations in the EBC occur. The following table (table C1) provides water surface levels in the EBC, average velocities through the culvert at each stage, and the percent exceedance of each stage elevation.

Table C1: Range of Stages in EBC and Velocity in Culvert

EBC WSE (NAVD 88)	Average Velocity in Culvert (fps)	Percent Exceedance of Stage in EBC
26.9	0.8	96%
27.1	0.9	96%
27.3	1.1	95%
27.5	1.3	95%
27.7	1.8	91%
27.9	2.5	85%
28.1	3.3	79%
28.3	4.0	67%
28.5	4.6	52%
28.7	5.2	29%
28.9	5.8	12%
29.1	6.3	1%

Percent exceedance was calculated using the months of May, June, September, and October from 2003 – 2007. These months were selected to target time periods of upstream migration of salmonids that occur during the construction window. The table shows, that at least 88% of the time, average velocities will not exceed 6 fps. Furthermore, the 1% exceedance stage only exceeds the 6 fps criteria by 0.3 fps.

The water surface level in the EBC is influenced by downstream bulkheads and an upstream diversion. DWR can remove the downstream bulkheads if a lower stage in the EBC is desired. Also, DWR can request diversion of flow at the East-West Diversion weir to lower the stage in the EBC.

Considering the control DWR maintains over EBC stages, and the conservative elevation of the weir crest, velocities in the culvert are very unlikely to exceed 6 fps.

Length of Fish Ladder

The Denil fish ladder will be 32' long. This length falls well below the criteria of the 50' maximum recommended by NOAA Fisheries. At this length, the fish ladder will present a slope of 20%, which also falls within criteria for this design.

Invert Elevation of Fish Ladder

Invert at the fish entrance must be set an elevation that accounts for variable water levels in the side channel of Willow Slough. The correct invert elevation insures that a leap barrier is not created at low flows, and improper hydraulics aren't present at high flows. The 90% exceedance stage in Willow Slough is 19.75' (NAVD88). In order to attain the appropriate slope and length, and eliminate a leap barrier at the fish entrance, the invert elevation is designed to be set at 17.2' (NAVD88).

The following (figure C2) graph supplies stage percent exceedance in Willow Slough from October 1997 – October 2007.

Figure C2 Percent Exceedance of Stage Elevation in Willow Slough at West Borrow Pit (WSL) (October 1997 – October 2007)

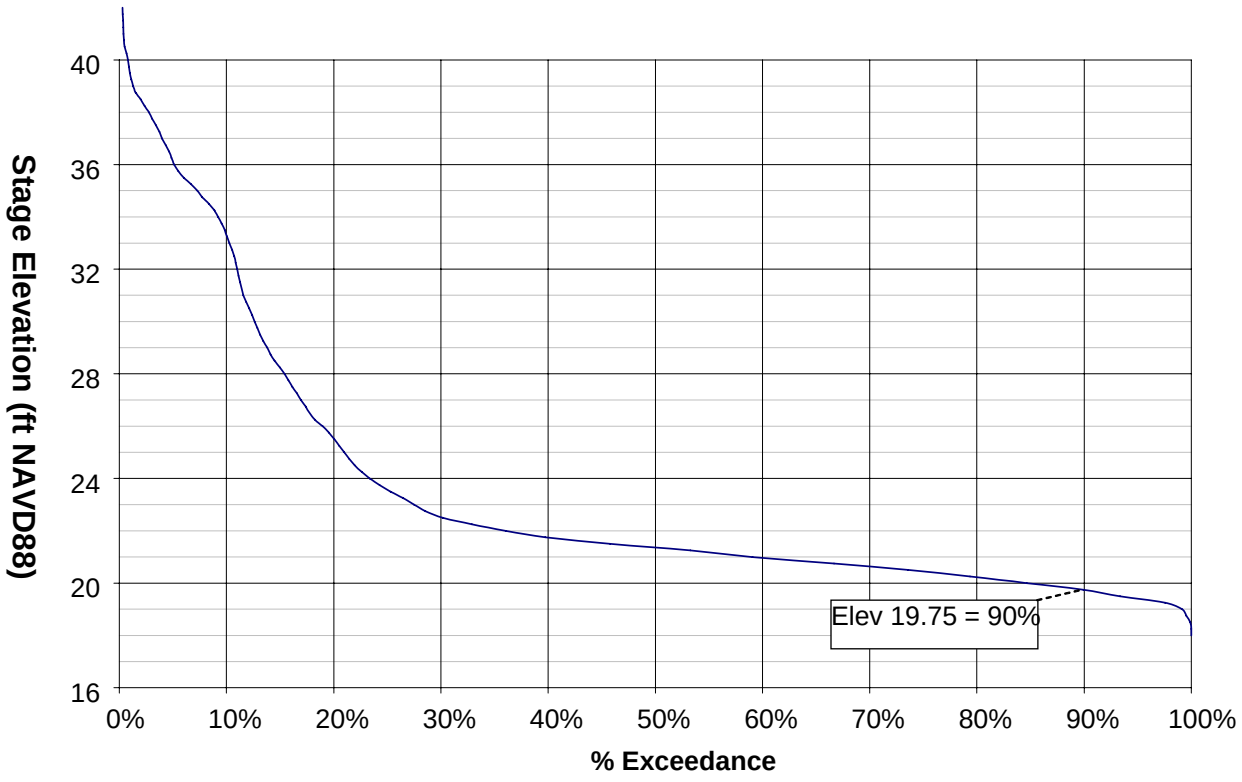

Resting Pool Size

The 25' long resting pool provides sufficient space for salmonids to recover after passing the Denil fish ladder. The following table (table C2) provides estimated volume of the resting pool at different stages in the EBC.

Table C2: Range of Volumes in resting pool

EBC WSE (NAVD 88)	Estimated Resting Pool Volume (ft^3)	Percent Exceedance of Stage in EBC
26.9	6,000	96%
27.9	7,198	85%
28.9	8,517	12%

Note: Volume estimated using CADD program

Design Specifications

Design Variables:

- Weir:
    - Crest elevation
    - Crest length
- Fish ladder:
    - Invert @ weir crest
    - Invert @ fish entrance (determined by low flow stage elevations during fish runs)

Design Choices:

- Weir:
    - Located 25’ d/s from Existing Concrete Culvert
        - Yields ~44’ crest length (established by topography minus 4’ for fish ladder)
- Fish Ladder:
    - 20% slope (11.0399º)
    - 32’ long
    - 4’ wide
    - 45º baffles
        - 2’-8” spacing

Equations:

Culvert

$$Q_{Culvert} = 10\sqrt{\left(\frac{H_T}{\left[\frac{2.5204\,(1+K_e)}{D^4} + \frac{466.18\,n^3 L}{D^{(16/3)}}\right]}\right)}$$

K_e =	0.5	
L =	50	ft
D =	5	ft
n =	0.014	

TEMPORARY FISH LADDER

$$Q = 5.73\,D^2\sqrt{bs}$$

b =	2.333	ft
s =	20%	

FLOW OVER WEIR

$$Q = CLH^{3/2}$$

C =	3.33	
L =	44	ft

Willow Slough Hydraulic Calculations:

Given:
- Culvert Invert Elev 18.1 (NAVD 88)

NWSE EBC = 26.9 - 28.9 (NAVD 88)

- Start w Weir Elev of 26.4 (NAVD 88)

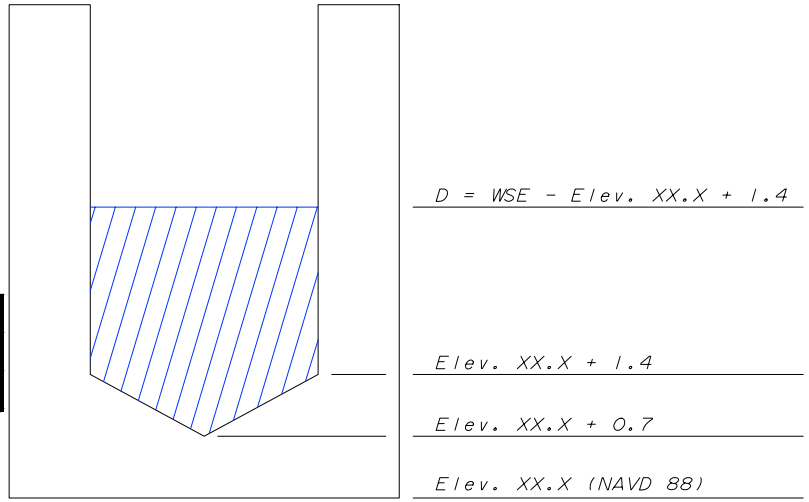

Variables:	
27.5	= Weir Crest (NAVD 88)
23.5	= Temporary Fish Ladder Invert at Weir

$$Q_{Culvert} = Q_{TFL} + Q_{Weir}$$

RANGE OF FLOWS

ELEVATIONS		FLOWS			CALCULATION VARIABLES			RELEVANT FISH NUMBERS		
EBC WSE (NAVD 88)	**Weir WSE (NAVD 88)**	**$Q_{Culvert}$ (cfs)**	**Q_{TFL} (cfs)**	**Q_{Weir} (cfs)**	**H_T (ft)**	**D (ft)**	**H (ft)**	**$V_{Culvert}$ (fps)**	**Vol_{pool}* (ft^3)**	**$Exc_{migration}$ (%)**
26.9	26.89	15	15	0	0.0	2.0	-0.6	0.8	6,000	96%
27.1	27.08	18	18	0	0.0	2.2	-0.4	0.9	6,228	96%
27.3	27.27	22	22	0	0.0	2.4	-0.2	1.1	6,462	95%
27.5	27.46	25	25	0	0.0	2.5	0.0	1.3	6,702	95%
27.7	27.62	35	29	6	0.1	2.7	0.1	1.8	6,947	91%
27.9	27.75	50	31	18	0.2	2.8	0.2	2.5	7,198	85%
28.1	27.85	64	34	30	0.2	2.9	0.4	3.3	7,453	79%
28.3	27.93	78	36	42	0.4	3.0	0.4	4.0	7,712	67%
28.5	28.01	90	37	53	0.5	3.1	0.5	4.6	7,976	52%
28.7	28.07	102	39	63	0.6	3.2	0.6	5.2	8,244	29%
28.9	28.13	113	40	73	0.8	3.2	0.6	5.8	8,517	12%
29.1	28.18	123	42	82	0.9	3.3	0.7	6.3	8,794	1%

* Vol calculated using CADD program

Variable Definitions:

$Q_{culvert}$	Flow in Existing Concrete Culvert
Q_{TFL}	Flow in temp fish ladder
Qweir	Flow over weir
H_T	Head diff bt EBC & WS
D	Depth in temp fish ladder
H	Head above weir crest
$V_{culvert}$	Velocity thru Existing Concrete Culvert
Vol_{pool}	Volume of resting pool
Exc_{mig}	% exceed during migration
K_e =	Culvert entrance coeff
L =	Length of Culvert
D =	Dia of Culvert
n =	Manning's n
b =	Width of temp fish ladder
s =	Slope of temp fish ladder
C =	weir coeff
L =	Length of weir

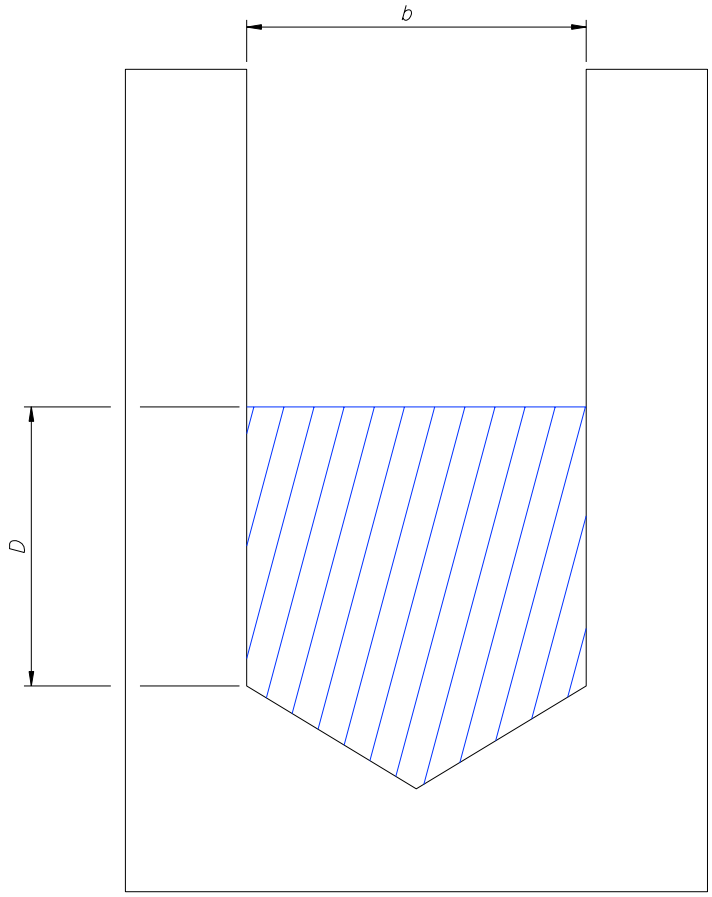
b
D

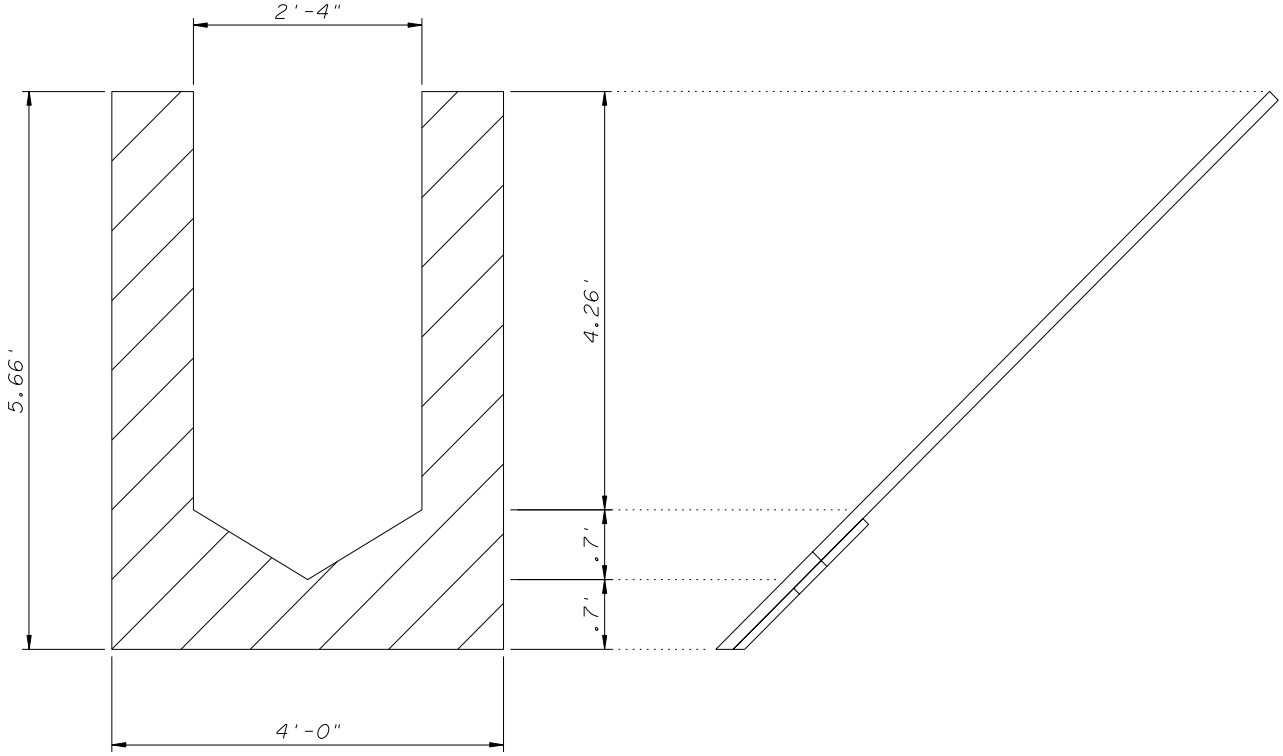
2'-4"
5.66'
4.26'
.7'
.7'
4'-0"

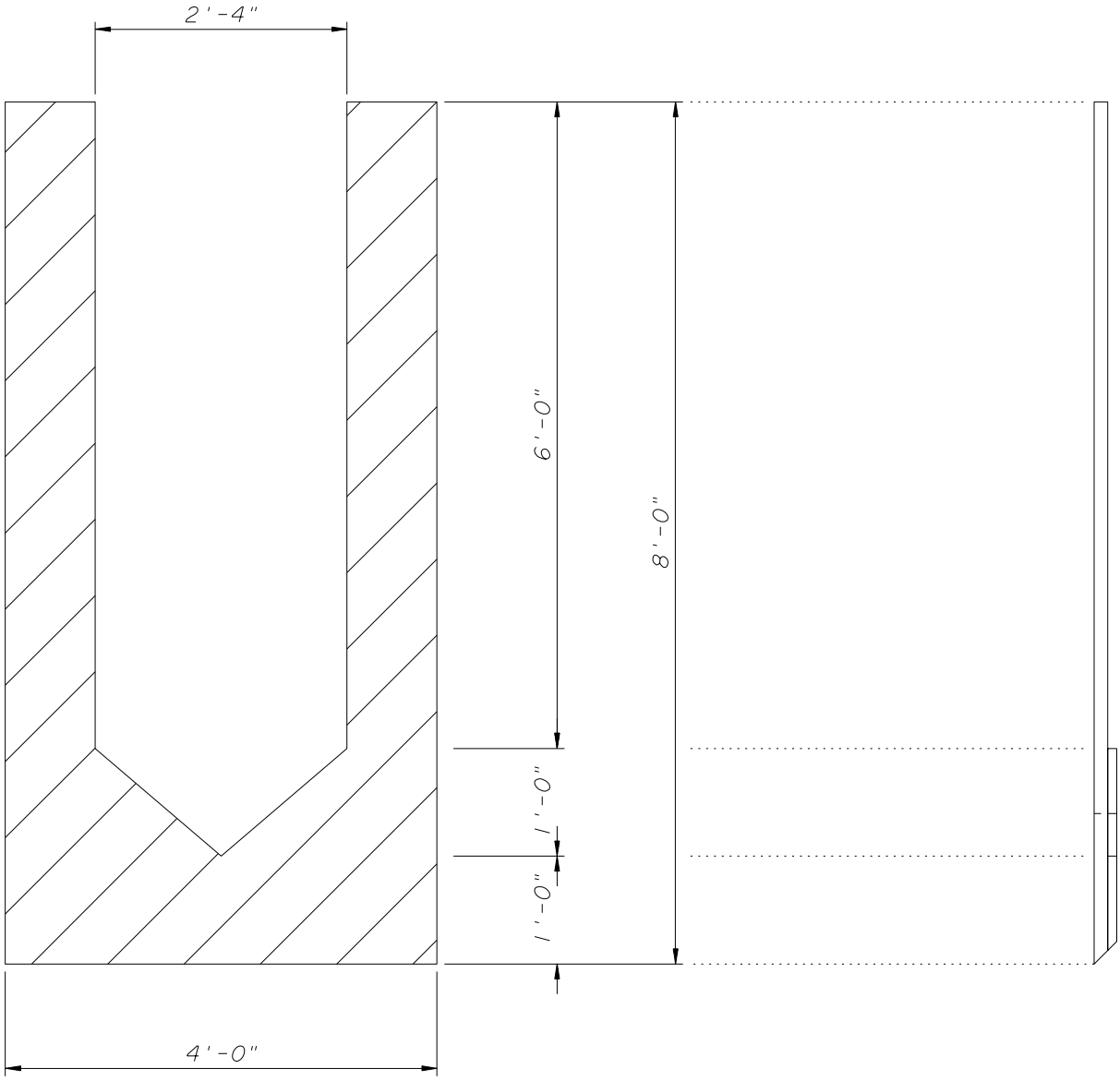
2'-4"
6'-0"
8'-0"
1'-0"
1'-0"
4'-0"

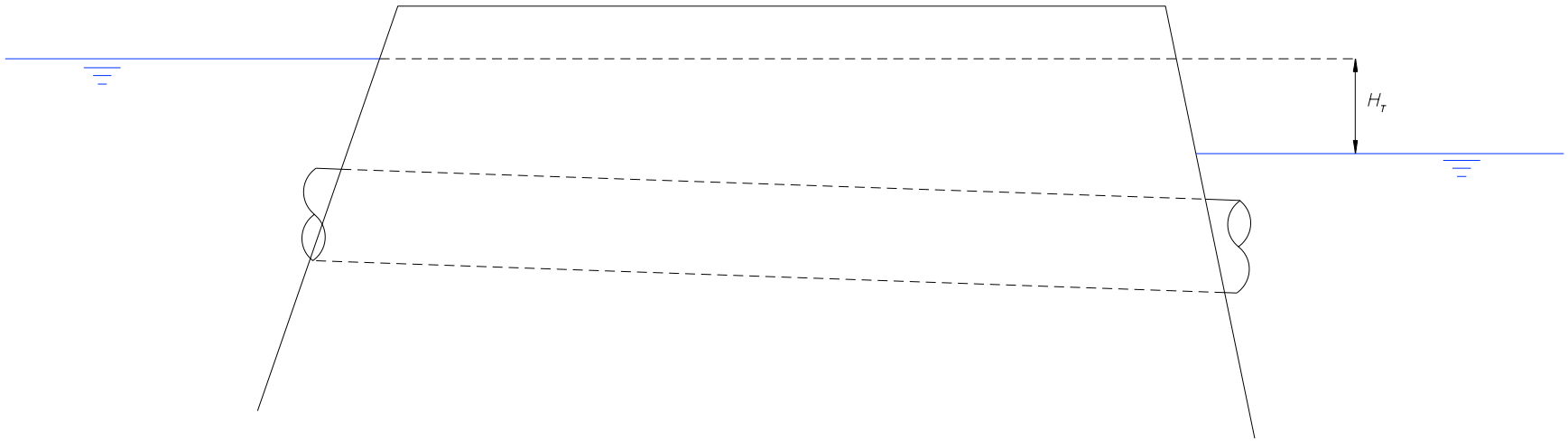
H_T