State of California
The Resources Agency
DEPARTMENT OF WATER RESOURCES
Division of Planning and Local Assistance

Lower Butte Creek - Sutter Bypass Department of Water Resources Pumping Plants Fish Screening Project

Preliminary Engineering Technical Report

August 2004

Arnold Schwarzenegger Governor State of California	Mike Chrisman Secretary for Resources The Resources Agency	Lester Snow Director Department of Water Resources

Copies of this report are available without charge from:

State of California
Department of Water Resources
P.O. Box 942836
Sacramento, CA 94236-0001

If you would like this report in an alternate format, contact the above address or call our
Equal Opportunity and Management Investigations Office
TDD: 1-800-653-6934
Voice: 1-800-653-6952

State of California
The Resources Agency
DEPARTMENT OF WATER RESOURCES
Division of Planning and Local Assistance

Lower Butte Creek - Sutter Bypass Department of Water Resources Pumping Plants Fish Screening Project

Preliminary Engineering Technical Report

August 2004

Arnold Schwarzenegger Governor State of California	Mike Chrisman Secretary for Resources The Resources Agency	Lester Snow Director Department of Water Resources

Foreword

Declining salmon and steelhead populations have led to increased efforts to implement restoration activities to preserve and enhance their populations while respecting the needs of the various stakeholders. More than $25 million has been invested in fish passage and screening projects in the middle reaches of Butte Creek, resulting in dramatic increases in returning adult anadromous fish populations. The continued success of those projects can be assured through completion of fish passage improvements in the lower reaches of the complex Butte Creek system. The Lower Butte Creek Project is a stakeholder-driven effort that has focused on developing alternatives to fish passage through Lower Butte Creek while maintaining the viability of agriculture, seasonal wetlands, and other habitats.

The Lower Butte Creek - Sutter Bypass, Department of Water Resources Pumping Plants Fish Screening Project is an integral part of the ongoing Butte Creek restoration activities. The objective of this project is to reduce losses of adult and juvenile anadromous fish from the Sutter Bypass East Borrow Canal, which is part of the Lower Butte Creek stream system. Proposed structural modifications to the pumping plants include constructing juvenile fish screens and adult fish exclusion barriers at each site.

This study was funded by the California Department of Fish and Game (DFG) through the Tracy Mitigation Agreement. The contract coordinator for DFG is Fred Jurick, Central Valley Bay-Delta Branch.

Dwight P. Russell
Chief,
Northern District

Contents

Foreword iii
Table of Contents iv
Organization, Department of Water Resources ix
Acknowledgments x
Registered Engineers' Stamps xi
Abbreviations and Acronyms xii

General

Introduction 1
- Project Location and Access 1
- Project Background 1
- Purpose and Need for Project 3
- Special Project Notes 6

Project Alternatives 7
- Alternatives Considered 7

Description of Investigation 9
- Surveying and Site Information 9
- Hydrology 10
- Site Geology 11
- Environmental Review 11

Project Design Considerations 12
- Existing Operating Criteria 12
- Water Rights and Peak Demand Flows 12
- Hydraulic Criteria 13

Summary of Findings 15
- Description of Alternatives 15
- Summary of Advantages and Disadvantages 17

Conclusion
- Site Conditions and Assumptions 19
- Codes and Standards 19
- Final Design Instructions 19

Pumping Plant No. 1

Introduction 21
- Project Location 21
- Project Description 22
- Hydrology 24

Pumping Plant No. 1 (Continued)

Adult Fish Exclusion Barriers 27
Sizing and Configuration 27
Operation and Maintenance 27

Flat Plate Fish Screen Alternative 29
Sizing and Configuration 29
Operation and Maintenance 30

Conical Fish Screen Alternative 32
Sizing and Configuration 32
Operation and Maintenance 33

Cylindrical Fish Screen Alternative 35
Sizing and Configuration 35
Operation and Maintenance 36

Design and Construction Summary 38
Site Geology and Environmental Documentation 38
Construction Summary 38

Pumping Plant No. 2

Introduction 53
Project Location 53
Project Description 54
Hydrology 57

Adult Fish Exclusion Barriers 59
Sizing and Configuration 59
Operation and Maintenance 59

Flat Plate Fish Screen Alternative 60
Sizing and Configuration 60
Operation and Maintenance 61

Conical Fish Screen Alternative 63
Sizing and Configuration 63
Operation and Maintenance 64

Cylindrical Fish Screen Alternative 65
Sizing and Configuration 65
Operation and Maintenance 66

Pumping Plant No. 2 (continued)

Design and Construction Summary 67
Site Geology and Environmental Documentation 67
Construction Summary 67

Pumping Plant No. 3

Introduction 82
Project Location 82
Project Description 83
Hydrology 85

Adult Fish Exclusion Barriers 88
Sizing and Configuration 88
Operation and Maintenance 88

Flat Plate Fish Screen Alternative 89
Sizing and Configuration 89
Operation and Maintenance 90

Conical Fish Screen Alternative 92
Sizing and Configuration 92
Operation and Maintenance 93

Cylindrical Fish Screen Alternative 94
Sizing and Configuration 94
Operation and Maintenance 95

Design and Construction Summary 96
Site Geology and Environmental Review 96
Construction Summary 96

Tables

1: Comparison of flat plate fish screens 15
2: Comparison of conical fish screens 16
3: Comparison of cylindrical fish screens 16

Pumping Plant No. 1
4: Flat plate fish screen alternative preliminary cost estimate 40
5: Conical fish screen alternative preliminary cost estimate 41
6: Cylindrical fish screen alternative preliminary cost estimate 42

Tables (continued)

Pumping Plant No. 2

7: Flat plate fish screen alternative preliminary cost estimate 69
8: Conical fish screen alternative preliminary cost estimate 70
9: Cylindrical fish screen alternative preliminary cost estimate 71

Pumping Plant No. 3

10: Flat plate fish screen alternative preliminary cost estimate 98
11: Conical fish screen alternative preliminary cost estimate 99
12: Cylindrical fish screen alternative preliminary cost estimate 100

Figures

1: Location map 2
2: Gravity flow scenario diagram 4
3: Cross section view of pumping facilities flow scenarios 5
4: Aerial photograph of Pumping Plant No. 1 21
5: Photograph of old Pumping Plant No. 1 22
6: Photograph of new Pumping Plant No. 1 and south toe drain 23
7: Photograph of headwall structure and submerged flap gates 24
8: Aerial photograph of Pumping Plant No. 2 53
9: Photograph of old Pumping Plant No. 2 54
10: Photograph of new Pumping Plant No. 2 55
11: Photograph of headwall structure and flap gates 56
12: Aerial photograph of Pumping Plant No. 3 82
13: Photograph of old Pumping Plant No. 3 sump and toe drain 83
14: Photograph of new Pumping Plant No. 3. 84
15: Photograph of headwall structure and flap gates 85

Preliminary Engineering Drawings

Pumping Plant No. 1

1: Title Sheet and Area Map 43
2: General Plan 44
3: Isometric Views 45
4: Flat Plate Fish Screen Site Plan 46
5: Flat Plate Fish Screen Plan and Elevation 47
6: Conical Fish Screen Site Plan 48
7: Conical Fish Screen Plan and Sections 49
8: Cylindrical Fish Screen Site Plan 50
9: Cylindrical Fish Screen Plan and Sections 51
10: Fish Screen Details 52

Preliminary Engineering Drawings (continued)

Pumping Plant No. 2

11: Title Sheet and Area Map 72
12: General Plan 73
13: Isometric Views 74
14: Flat Plate Fish Screen Site Plan 75
15: Flat Plate Fish Screen Plan and Elevation 76
16: Conical Fish Screen Site Plan 77
17: Conical Fish Screen Plan and Sections 78
18: Cylindrical Fish Screen Site Plan 79
19: Cylindrical Fish Screen Plan and Sections 80
20: Fish Screen Details 81

Pumping Plant No. 3

21: Title Sheet and Area Map 101
22: General Plan 102
23: Isometric Views 103
24: Flat Plate Fish Screen Site Plan 104
25: Flat Plate Fish Screen Plan and Elevation 105
26: Conical Fish Screen Site Plan 106
27: Conical Fish Screen Plan and Sections 107
28: Cylindrical Fish Screen Site Plan 108
29: Cylindrical Fish Screen Plan and Sections 109
30: Fish Screen Details 110

Appendices

Meeting Notes and Correspondence A-1
Pumping Plants Hydrology B-1
Environmental Review Summary C-1
Fish Screening Criteria D-1

STATE OF CALIFORNIA
Arnold Schwarzenegger, Governor

THE RESOURCES AGENCY
Mike Chrisman, Secretary for Resources

DEPARTMENT OF WATER RESOURCES
Lester Snow, Director

Gerold H. Johns Deputy Director	Stephen W. Verigin Deputy Director	Vernon T. Glover Deputy Director	Peter Garris Deputy Director

Brian White Assistant Legislative Affairs	Susan Sims Assistant Director Public Affairs	Nancy Saracino Chief Counsel

DIVISION OF PLANNING AND LOCAL ASSISTANCE

Mark W. Cowin ..... Chief

NORTHERN DISTRICT

Dwight P. Russell ..... Chief, Northern District
William D. Mendenhall ..... Chief, Water Management Branch

This report was prepared under the supervision of

Curtis K. Anderson ..... Chief, Engineering Studies Section

By

Teresa Connor ..... Engineer, Water Resources
Kevin Dossey ..... Engineer, Water Resources
Scott Kennedy ..... Engineer, Water Resources
Nancy Snodgrass ..... Engineer, Water Resources

Assisted by

Bill McLaughlin ..... Engineer, Water Resources
Jim West ..... Land Surveyor, Water Resources
Michael Serna ..... Senior Delineator, Water Resources
Brian Baer ..... Water Resources Technician I
Erich Brashears ..... Student Assistant, Water Resources
Adam Killinger ..... Student Assistant, Water Resources
Amber Pierce ..... Student Assistant, Water Resources

Acknowledgements

Technical Support

Paul Ward, Associate Fishery Biologist, DFG
Steve Thomas, Hydraulic Engineer, NOAA Fisheries
Art Winslow, Executive Office Representative, DWR
Randy Beckwith, Engineer, DWR
David Bogener, Staff Environmental Scientist, DWR
Gail Kuenster, Environmental Scientist, DWR
Frank Glick, Chief, Project Geology Section, DWR
Ted Bruce, Senior Engineering Geologist, DWR
Timothy Todd, Associate Engineering Geologist, DWR
Jeffery Van Gilder, Associate Engineering Geologist, DWR

Additional Support

Olen Zirkle, Ducks Unlimited
Linda Rodgers, Ducks Unlimited
Fred Jurick, Environmental Scientist, DFG
John Icanberry, Fishery Biologist, USFWS
Buford Holt, United States Bureau of Reclamation
Keith Swanson, Supervising Engineer, DWR
Jim Coe, Engineer, Water Resources, DWR
Ken Dickerson, UC Superintendent, DWR
Joel Miller, USFWS
Mike Peters, USFWS
Paul Russell, Sutter Extension WD
Elena Slagle, CWA
Al Montna, Montna Farms
Nicole Van Vleck, Montna Farms
Dick Akin, Akin Ranch

Organizations Consulted

California Department of Fish and Game
California Department of Water Resources
National Marines Fisheries Service
United States Fish and Wildlife Service

Lower Butte Creek - Sutter Bypass
Department of Water Resources Pumping Plants
Fish Screening Project

REGISTERED ENGINEERS' STAMPS

The technical information contained in this preliminary engineering technical report has been prepared by or under the direction of the following registered engineers:

Date:_____

Abbreviations and Acronyms

cfs	cubic feet per second
CWA	California Waterfowl Association
DFG	California Department of Fish and Game
DFM	Division of Flood Management (of DWR)
DOE	Division of Engineering (of DWR)
DWR	California Department of Water Resources
fps	feet per second
EBC	East Borrow Canal
GPS	Global Positioning System
NAD	North American Datum
NAVD	North American Vertical Datum
ND	Northern District (of DWR)
NOAA Fisheries	National Oceanic and Atmospheric Administration Fisheries
SWRCB	State Water Resources Control Board
USED	United States Engineering Datum
USGS	United States Geological Survey
USFWS	United States Fish and Wildlife Service
WBC	West Borrow Canal
WSEL	water surface elevation

General

Introduction

This report summarizes the results of the California Department of Water Resources (DWR) preliminary engineering investigation of fish screening solutions at DWR Pumping Plant Nos. 1, 2, and 3 along the East Borrow Canal (EBC) of the Sutter Bypass in Sutter County, California. The investigation was conducted under contract with the California Department of Fish and Game (DFG). Included in this report is a discussion of project alternatives, a description of the investigation, project design considerations, and a summary of findings.

For each project site, this report includes a discussion of the physical and operational characteristics of the proposed adult fish exclusion barriers and the three alternative fish screen designs investigated, preliminary design drawings and cost estimates for each alternative, and a summary of final design and construction issues. Attached appendices include meeting notes, hydrology charts, an environmental review summary, and DFG and National Oceanic and Atmospheric Administration (NOAA) fisheries fish screening criteria. Results of geologic reconnaissance work completed as part of this investigation are contained in DWR Geology Report No. 94-00-17, a memorandum report.

Project Location and Access

The three proposed project sites are located in Sutter County, California, along the EBC of the Sutter Bypass near Yuba City, California (Figure 1). The east levee of the Sutter Bypass floodway runs from Long Bridge near State Highway 20 to the Feather River near Nelson Slough. Pumping Plant Nos. 1, 2, and 3 are about 3, 12, and 19 miles upstream of the Feather River, respectively.

Access to the project sites is via county roads and levee roads from State Highways 99, 20, and 113, as shown in Figure 1 and described in the respective pumping plant sections of the report.

Project Background

Recent declines in salmon and steelhead populations have led to increased efforts to implement restoration activities to preserve and enhance their populations, while respecting the needs of the various stakeholders. The Lower Butte Creek - Sutter Bypass, Department of Water Resources Pumping Plants Fish Screening Project is a part of these efforts.

Adult anadromous fish migrate from the Pacific Ocean, up the Sacramento River, and through Lower Butte Creek, to their spawning grounds in Upper Butte Creek near Chico, California. Some fish enter the Lower Butte Creek system through Sacramento Slough and travel up the Sutter Bypass West Borrow Canal (WBC) to its confluence

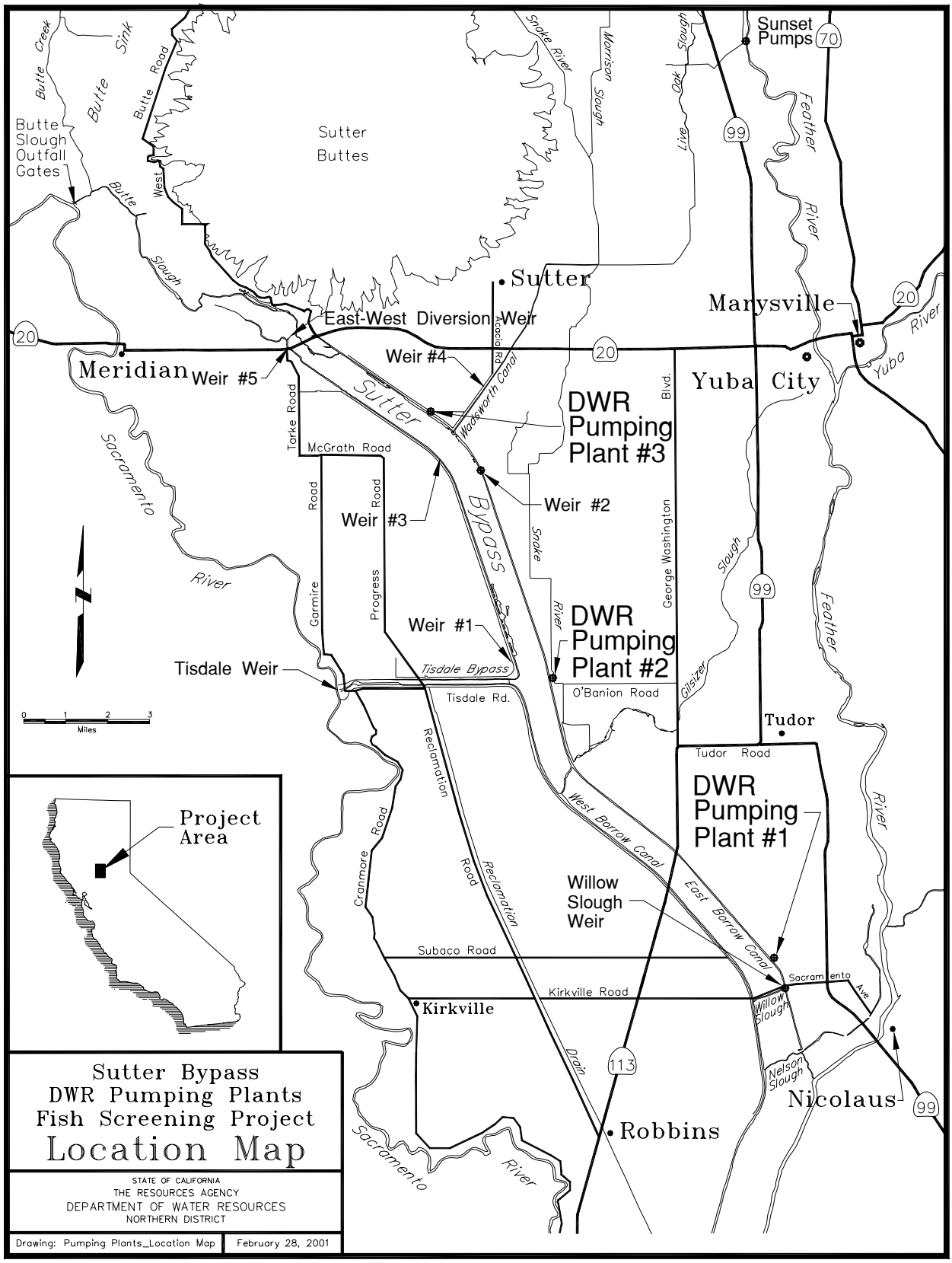

Figure 1. Location map

with Willow Slough. From Willow Slough, fish can cross over to the EBC where the DWR Pumping Plants are located. Fish from both borrow canals reunite near the upper end of the Sutter Bypass at Butte Slough. Some fish may enter the Butte Creek system through the Butte Slough Outfall gates at the Sacramento River near Colusa, and continue their journey upstream to the cool holding pools and spawning grounds. Juvenile fish follow the same general route back to the ocean.

DWR owns and operates three pumping plant facilities on the east side of the Sutter Bypass, south of Highway 20. The original pumping facilities were built in the 1930s by the U.S. Army Corps of Engineers. In 1937, the operation and maintenance responsibilities for the facilities were turned over to the California Reclamation Board and later delegated to DWR. The structures drain or pump rain runoff and irrigation return water into the EBC from basins east of the Sutter Bypass levees. Newer pumping facilities were constructed by DWR in the early 1980s to improve the pumping capabilities. When hydraulic conditions allow, the old pumping plants continue to drain water into the EBC via gravity flow through the old culverts. These culverts are usually open and, by adjusting slide gates within the levee, serve to maintain water levels in the EBC and the drain/irrigation canals east of the Sutter Bypass east levee. During the irrigation season, the old culverts can be used to divert water from the EBC into the agricultural lands east of the Sutter Bypass. Detailed information about the drainage systems and the old pumping plants can be found in the DWR Northern District (ND) report *Sutter Bypass Study*, dated May 1976.

Purpose and Need for Project

Improvements to the pumping plant facilities are an integral part of the overall restoration efforts in the Butte Creek system. More than $25 million has already been invested in fish passage and screening projects in the middle reaches of Butte Creek. These projects have decreased delays and losses of migrating anadromous fish, and resulted in major increases in adult fish spawning in the upper Butte Creek system. Improving migration through the Lower Butte Creek system is critical to the continued success of these projects.

The objective of this project is to reduce losses of adult and juvenile anadromous fish from the Lower Butte Creek stream system. Currently, migrating salmon and steelhead can be lost from the EBC through culverts at the older pumping plants. Figure 2 illustrates the existing flow scenarios through the old pumping plants' culverts, depicting how adult and juvenile fish exit the EBC. Figure 3, on page 5, shows a cross section view of the potential flow scenarios through the old pumping plants' culverts and the proposed fish facilities, which would prevent the loss of fish. The closed-gates pumping scenario is also depicted in Figure 3.

Fish cannot enter the discharges of the newer, upgraded pumping plants but can cross through the old pumping plants' culverts. Adult salmon and steelhead may be attracted by drainage flows into the EBC and can pass through the drainage culverts

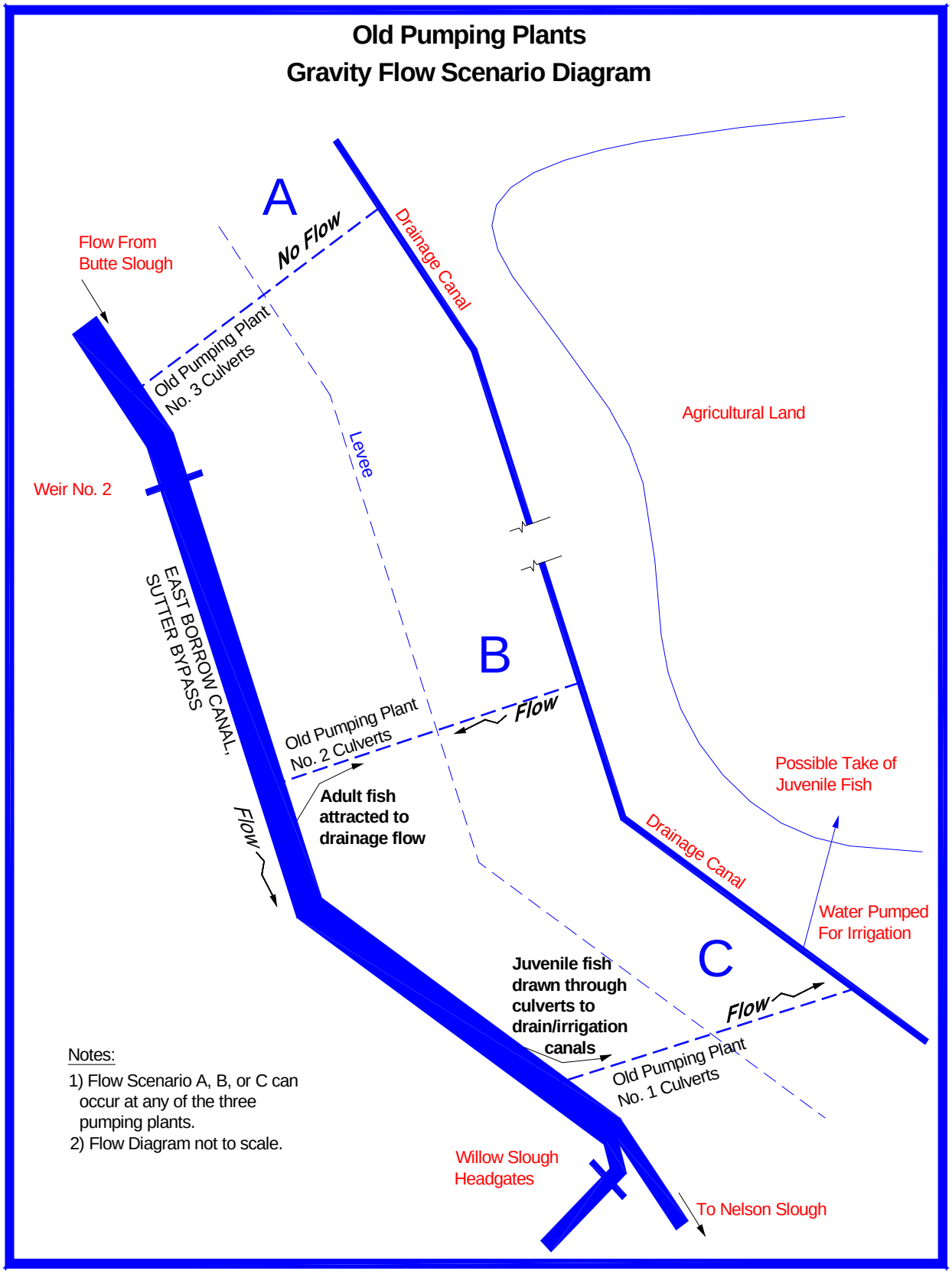

Figure 2. Gravity flow scenario diagram.

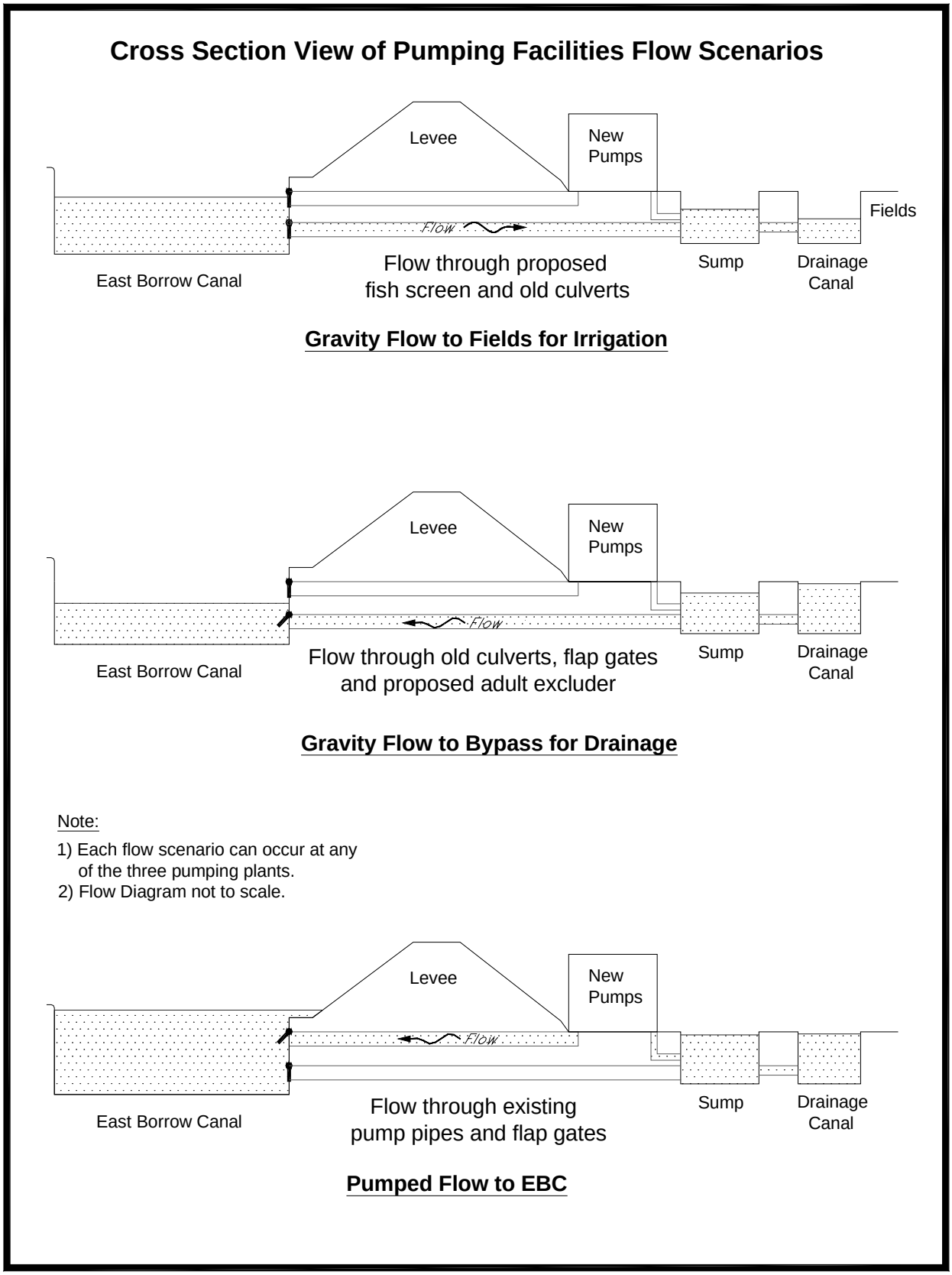

Figure 3. Cross section view of pumping facilities flow scenarios.

under the levee, and then be lost to the irrigation and drain systems east of the Sutter Bypass (Figure 2, scenario B). Juvenile salmonids can also stray off-course, into the canals, when water is diverted via gravity flow through the old drains from the EBC to the irrigated lands outside of the Sutter Bypass. Instinctively following the ”downstream” flows, juveniles may be entrained in the diverted water and then stranded, eaten by predators, or killed by pumps (Figure 2, scenario C).

Proposed structural modifications to the old pumping plants include constructing adult fish exclusion barriers and juvenile fish screens. These new structures would reduce losses of migrating fish without compromising the functions of the pumping plants or interfering with water diversions from the EBC. No modifications would be made to the newer pumping facilities.

Special Project Notes

The peak demand flow quantities, which ND staff used to size the juvenile fish screens and associated structures, were determined by the stakeholder representatives as described in “Water Rights and Peak Demand Flows” on page 12. Those quantities may change, depending on a planning process now under consideration.

The preliminary cost estimates are subject to review by DWR, Division of Engineering (DOE) staff. The estimated quantities and costs shown in Tables 4 through 12, and the preliminary engineering drawings, are not intended for bidding or construction purposes, as final designs may result in changes to any or all quantities and costs.

Final fish screen designs must comply with current DFG Statewide Fish Screening Criteria design requirements and meet NOAA Fisheries criteria. Final designs will be subject to the approval of DFG, NOAA Fisheries, United States Fish and Wildlife Service (USFWS), DWR’s Division of Flood Management (DFM), and The Reclamation Board of California.

Project Alternatives

DWR-ND, under contract with DFG, conducted this preliminary engineering investigation in cooperation with many stakeholders and agency representatives. Stakeholder meetings (notes, Appendix A) were held with DWR Pumping Plant operators (DFM Sutter Yard staff), representatives of landowners, Ducks Unlimited, State and federal agencies, and water districts to discuss the alternative project designs. The stakeholder group considered many alternatives to reduce fish losses, including those listed below. The alternatives were evaluated on many factors, including operation and maintenance, location and condition of existing facilities, flow characteristics, stream hydrology, site geology, biological criteria, owner liability, and economics. After consultation with the stakeholders, five alternatives were narrowed down to one alternative. The selected alternative has three different fish screen options for each pumping plant. The three viable juvenile fish screen designs were investigated in conjunction with adult exclusion barrier designs for each site. The results of the investigation are summarized in this report.

Alternatives Considered

Several alternatives considered during this investigation are listed below. Alternative 4 and its sub-alternatives were fully investigated in this study.

- Alternative 1 - No action.
- Alternative 2 - Permanently close the existing flap gates (some are currently propped open) at all pumping plants to prevent loss of fish.
- Alternative 3 - Combine the three diversions into one or two diversions, hydraulically connect them, construct juvenile fish screens at the remaining diversion(s), and construct adult exclusion barriers at the three pumping plant sites.
- <u>Alternative 4</u> - Construct juvenile fish screens and adult exclusion barriers at each pumping plant site.
- Alternative 5 (Other Options) - Installing electronic fish barriers at the drainage culvert outlets or placing mesh netting across the pumping plant sumps to block fish were briefly discussed during the design process.

Alternative 1 was abandoned because it does not meet the goals of this restoration project.

Alternative 2 was eliminated because closing the flap gates would prevent diversion of irrigation water from the EBC. This alternative was unacceptable to the landowners who have been diverting water through the culverts for many decades. Refer to the Water Rights and Peak Demand Flows section (p.12) for further discussion.

Alternative 3 was investigated on a cursory level, and the practicality of the two sub-alternatives were deemed not likely feasible because of higher initial construction costs, potential complications of connecting the canal systems, and the difficulties of

managing water distribution from the combined diversions and drains. Combining all three diversions into one, or combining the diversions at Pumping Plants Nos. 3 and 2, would not be feasible because of the elevation differences between Pumping Plant No. 3 and the downstream plants (approximately 8 feet to Pumping Plant No. 2 and a total of 9 feet to Pumping Plant No. 1). Also, the Wadsworth Canal levees isolate the drains/canals connected to Pumping Plant No. 3 from the other drainage areas. The cost of constructing a siphon under Wadsworth Canal and connecting the drain systems with pipelines or new 8-foot high levees would be prohibitive.

Combining the diversions at Pumping Plant Nos. 1 and 2 into just one diversion with a fish screen, at either Pumping Plant No. 1 or 2, is hydraulically possible because there is only about one foot of elevation difference between the normal operating water surface elevations at the plants. However, no cost savings would be realized unless the adult fish excluder could also be eliminated at the abandoned diversion site. Because the use of the old pumping plant culverts as gravity flow drains will be dependent on the presence of an adult fish excluder, total initial construction costs would be similar with either option. While some savings in costs of dewatering, site work, and superstructure costs could be realized because of the smaller overall structure at one site, increases in costs of an equal magnitude would be incurred at the combined diversion site.

If a modified design of an adult excluder at the abandoned diversion site could potentially lead to overall construction cost savings at the pumping plant sites, those savings would be more than offset by the costs of connecting the canals, increasing the capacity of some of the canals and the culverts in the canals, and construction of check-structures and flow control or monitoring devices. Detailed surveys and design work would be needed to determine the best way to connect the systems and ensure unimpaired, status quo operations for all involved landowners. Further analysis would require a separately funded study. In conclusion, Alternative 3 is possible, but initial analysis indicates it is not likely feasible.

Alternative 4 is the alternative that was carried through preliminary design. Flat plate, conical, and cylindrical retrievable juvenile screens were considered potentially feasible for these project sites. During an early project meeting, it was decided that only the flat plate fish screen type would be fully investigated. However, as the investigation progressed, and hydrology and water use information was analyzed, the design options expanded. Because of varying flow frequencies, the potential for reduction of peak demand flows, operation and maintenance concerns, uncertain capital costs, and liability reasons, the conical and cylindrical screen types were also investigated. Each of the three types, integrated with an adult exclusion barrier structure, was carried through preliminary design at each site. Cost estimates were generated for all nine design configurations (Tables 4 – 12). Summary tables of the nine designs are shown in the Summary of Findings section (p.15).

Alternative 5 options were quickly rejected by DFG and NOAA Fisheries because these unproven methods of screening fish, and the potential for increased predation, are unacceptable for listed species.

Description of Investigation

ND staff began the preliminary engineering process with site surveys and hydrologic analyses. DFG and NOAA Fisheries fish screen criteria and standards were referenced for determining design requirements for the alternatives investigated. DFG, DWR, and NOAA Fisheries biologists and engineers were consulted during the design process. DWR engineering geologists conducted a geologic investigation of the project sites, and DWR environmental scientists conducted preliminary environmental site surveys.

Surveying and Site Information

In June 2000, ND staff began collecting field data at the proposed fish screening project locations. The work performed for all three locations included aerial photography, topographic surveys, mapping, analysis of hydrologic data, and review of operational procedures.

The aerial photographs of the sites were taken in late June 2000 for use in this investigation. Prior to the flight, ND set and surveyed air targets. These targets, used to rectify the photographs, were surveyed using Global Positioning System (GPS) equipment. GPS equipment was also used to survey control monuments at each of the proposed project locations. The purpose of the control survey was to bring State Plane Coordinates and elevations to each project site (horizontal = North American Datum of 1983 (NAD 83), vertical = North American Vertical Datum of 1988 (NAVD 88)). Each site has at least one existing vertical control monument that references United States Engineering Datum (USED). These monuments were surveyed using GPS and assigned a NAD 83 horizontal coordinate value and a NAVD 88 elevation. It is important to note that the existing staff gages at the three project sites reference USED datum, and this report references NAVD 88 datum.

The initial topographic surveys for all three sites were performed in July 2000. Total stations and automatic levels were used to collect topographic data of the existing terrain and facilities. The topographic data included ground shots and cross sections in the toe drains, drainage canals, and the EBC. This data was used to create 1-foot interval contour maps of each project site.

ND personnel made many follow-up site visits after the initial surveys. Trips were made to gather stage data for the sumps and canals, to make water velocity measurements in the EBC and gravity flow culverts, and to determine the location of bore holes for the geologic investigation. Additional trips were made to survey the bore holes and collect documents containing historical flow records and operational procedures from the Sutter Maintenance Yard.

Hydrology

The Butte Slough Outfall Gates and the East-West Diversion structure control the amount of Butte Creek and Butte Basin water normally flowing into the upper end of the EBC. Tributary flows enter the EBC through Wadsworth Canal and at each of the three pumping plants. Uncontrolled floodflows enter the Sutter Bypass floodway from the Sacramento River when the Moulton, Colusa, or Tisdale weirs are crested. Many pumps and diversions along the EBC divert water to surrounding agricultural lands.

The East-West Diversion structure, Weir No. 2, and the Willow Slough Weir structure control water levels in the EBC during non-flood periods. The East-West Diversion is a flashboard weir structure that, in conjunction with Weir No. 5 located on the WBC, divides the Butte Slough flow between the EBC and the WBC. Weir No. 2 and the Willow Slough Weir structure were constructed to control water levels in the EBC. The relatively constant head, which is maintained by making adjustments to these structures, facilitates pumping and diversion of irrigation water to lands along the Sutter Bypass. Weir No. 2 is a flashboard dam in the EBC that is used to control water levels in the upstream reach where Pumping Plant No. 3 is located. Willow Slough Weir headgates control water levels at Pumping Plant No.1 and Pumping Plant No. 2.

When the Sutter Bypass is not flooded, the EBC can function as a drainage canal and also as an irrigation water supply for the lands east of the bypass, as well as the land within the bypass. Weir No. 2 controls water levels in the northern portion of the EBC. Except during flood periods, the reach upstream and downstream of Weir No. 2 is maintained at about 38 feet and 27 feet, respectively. The southern portion of the EBC is maintained about 8 feet higher than the lower reaches of the WBC by the headgate structure at Willow Slough. Sutter Maintenance Yard staff inspect the structures daily and make necessary adjustments to Weir No. 2 flashboards and to the Willow Slough Weir headgates to maintain these desired water levels.

The available hydrology data for the EBC of the Sutter Bypass is very limited. There are gaging stations located in Butte Slough above the East-West Diversion, and one in Willow Slough. However, the EBC flow is not specifically monitored, and the amount of water diverted into the EBC at the East-West Diversion is not monitored with a gaging station. The data from Willow Slough gaging station is not useful for this investigation because of the numerous unmonitored diversions and pumps located along the EBC between the two gaging stations and because of the unmeasured flow traveling past Willow Slough Weir into Nelson Slough. Because of facility operations and the limited flow information, linear stage-discharge relationships do not exist at the three pumping plant sites.

For each of the three pumping plant sites, stage data were analyzed to determine high and low water surface elevations and to determine maximum positive and negative observed head differentials between the EBC and the old pumping plant sumps. Frequency curves were developed to determine if fish screens were required at each of

the pumping plants. Refer to the Hydrology sections for each of the pumping plants and Appendix B for more detailed information.

Site Geology

Division of Engineering (DOE), Project Geology staff conducted a geologic investigation of the proposed project sites, which included a review of site history and compilation of existing geologic data. After determining more site-specific information was needed, they conducted geologic exploration at the proposed project sites. The drilling of two bore holes, 30 and 60 feet deep, at each site was completed in November 2001. A geologic exploration program memorandum report was completed as a part of this preliminary engineering investigation. DWR *Project Geology Report No. 94-00-17* is bound separately, and copies can be obtained from the State, as described inside the front cover.

Environmental Review

DWR environmental scientists performed preliminary environmental surveys of the proposed project sites to identify potential environmental issues that could affect construction permitting of the proposed facilities. The environmental site surveys consisted of investigating potential impacts to sensitive plants, fish and wildlife, water quality, recreation, and land use. Appendix C contains the Environmental Review Memorandum that describes the results of the preliminary surveys. The memo also lists project-related environmental issues, special status species that could occur in the project area, and environmental permits potentially required for the proposed project.

Project Design Considerations

Existing Operating Criteria

Section 8361 of the California Water Code specifies that DWR shall maintain and operate, on behalf of the State, the Project No. 6 portion of the Sutter Bypass portion of the Sacramento River Flood Control Project. Project 6 includes the three pumping plants along the EBC. There are two basic functions of the pumping plants. The main function of the facilities is to relieve the land between the Sutter Bypass and the Feather River of water from rainfall runoff and irrigation return flows. DWR uses the gravity flow portion of the pumping plants to drain water into the EBC when conditions permit, as described in the Project Background section (p. 3). When gravity flow is not possible, the pumps at the newer pumping plant facilities are used to perform this function. Currently, the other function of the old pumping plant drainage culverts is to provide irrigation water to landowners that have water right licenses to the water in the EBC.

The gravity flow culverts at the old pumping plants are used to divert irrigation water from the EBC. DWR uses gates, weirs, and pumps along the east levee of the Sutter Bypass to maintain elevations in the EBC and in the canals east of the Sutter bypass for facilitating irrigation pumping. The water level, at any given location in the EBC, is typically held within a fluctuating range of about 2 feet during non-flood periods. Any modifications to the pumping plants cannot interfere with DWR's obligation to drain or pump water into the Sutter Bypass or maintain water levels in the EBC. Specific operating parameters are described in the Hydrology section for each pumping plant.

Water Rights and Peak Demand Flows

MBK Engineers investigated the water use pertaining to the lands east of the Sutter Bypass, which occasionally draw irrigation water from the EBC through the three DWR pumping plants (see attached letter from MBK Engineers, Appendix A, p. A-17). The purpose of the MBK investigation was to estimate the peak demand flow at each site. MBK Engineers researched the landowners' water right licenses on file at the State Water Resources Control Board (SWRCB) Division of Water Rights. They also met with individual landowners and water users to help determine actual water usage.

The Sutter Bypass-Butte Slough Water Users table (Appendix A, p. A-19) lists water rights information and shows MBK's estimated peak demand flows (maximum rate of diversion) at each of the three DWR pumping plants. The estimate was based on MBK's interpretation of the appropriative water right licenses, the quantities specified in the licenses, and discussions with the water right holders regarding their irrigation practices. A flood-up rate of 1 cfs per 40 irrigated acres was used by MBK to estimate the potential demand. This flood-up rate is used by the SWRCB for estimating the instantaneous demand for rice land in the project area.

In some cases, the instantaneous demand flow calculated by MBK exceeded the flow identified in the water right license. It was determined that the 1 cfs per 40 acre flood-up rate was a reasonable estimate of the demand during the rice flood-up period because the water right licenses allow the rate of diversion to be increased by an unspecified amount and averaged over a 30-day period. Some of the estimated peak demand flows were reduced from the calculated demand, based on discussions with the individual water user regarding actual irrigation practices. The total estimated peak demand for each pumping plant facility assumes a worst-case scenario of all water users diverting at the same time, with no other water sources available. These assumptions were made to ensure the fish screens were not under-designed, which might lead to a situation where the maximum allowable approach velocities could be exceeded, potentially impinging juvenile fish on the screens.

For the purposes of this preliminary engineering design document, DWR used MBK Engineers' estimated peak demand as the design flow for juvenile fish screens at each pumping plant. The estimated peak demand flows for Pumping Plant Nos. 1, 2, and 3 are 93.7 cfs, 44.6 cfs and 56.1 cfs, respectively. However, as previously stated, these numbers could be subject to change, depending on the planning process now under consideration. Designs would need to be modified accordingly.

Hydraulic Criteria

There are two flow regimes to consider for project site hydraulic analyses. The first flow regime involves water flowing from the EBC, through fish screens, culverts, and into the drainage canals east of the Sutter Bypass. The second flow regime involves water flowing from the drainage canals, through the culverts, flap gates, adult exclusion barrier, and into the EBC.

For the first flow regime, DFG and NOAA Fisheries fish screening criteria must be met while minimizing head loss through the system. This will help to prevent negative impacts to fish in the EBC, while allowing water to be diverted through the culverts at the desired rate. The fish screens are sized to meet criteria for approach velocity (normal to screens) based on the maximum diverted flow. The screens will be the continually cleaned type and the approach velocity shall not exceed 0.33 feet per second. The actual wetted screen area required at the minimum river stage is calculated by dividing the maximum diverted flow by the allowable approach velocity.

The fish screen structures could add up to about 0.5 feet of head loss to the systems when the maximum amount of water is being diverted from the EBC. The effect would be that water levels in the sump and drains could be as much as 0.5 feet lower than during current irrigation pumping conditions. This head loss could be offset at Pumping Plant No. 1 and partially offset at Pumping Plant No. 2 by removing the existing obstructions (collars) near the ends of the culverts below the old pump houses. ND is not aware of any restrictions in the culverts in the sump at Pumping Plant No. 3.

For the second flow regime, it is important to allow water to drain as freely as possible from the drainage canals into the EBC. If the water level in the drainage canals is raised, the pumps in the new pumping plants may need to be operated more frequently. Presently, head loss is minimal because it is possible to suspend some of the flap gates in the EBC in the open position, but this will not be permitted after project completion. The proposed flap gates and adult exclusion barrier, like the fish screens, could increase head loss in the systems by up to about 0.5 feet. Therefore, water levels in the sumps and field canals might be raised by up to 0.5 feet in comparison with current drain system operating levels. However, the EBC control structures could be adjusted to lower the EBC water levels as much as 0.5 feet to compensate for this new head loss, thus keeping sump water levels status quo. Again, the head loss introduced by operation of the new facilities could be offset at Pumping Plant No. 1 and partially offset at Pumping Plant No. 2 by removing the obstructions (collars) on the ends of the culverts below the old pump houses.

Another feature of the proposed design is stage and flow direction sensors to allow the fish facilities to operate during both flow regimes with minimal manual adjustment. If the water level in the EBC is higher than in the sump, then irrigation water will be flowing through the fish screens, slide gates, culverts, and into the drainage canals. If the drainage canal water level becomes higher than the EBC water level, a flow sensor in the culvert will detect this condition and throttle close the slide gate to prevent backflow through the fish screen. The water flowing out of the drainage canals will push the flap gates open. If the flow direction changes again, the flap gates will be pushed closed, and the flow direction sensor will allow the slide gate to open, if desired, and water will begin flowing back through the fish screen.

The stage sensors will be situated upstream and downstream of the slide gates that are used to control the flow through the fish screen. Flow measurements will be performed to calibrate the sensors, and the sensors will send a signal to a control unit to regulate the flow through the fish screens and ensure that the design flow is not exceeded.

Summary of Findings

Description of Alternatives

Flat Plate Fish Screen and Adult Fish Exclusion Barrier

- Make minor improvements to access roads and staging areas
- Remove existing headwall and flap gates
- Construct sheet-pile cofferdam to dewater work site
- Inspect gravity flow culverts
- Excavate earth at toe of levee
- Construct flat plate fish screen
- Construct adult fish exclusion barrier
- Complete site finish work and erosion control

Table 1. Comparison of flat plate fish screens.

	PP No. 1	**PP No. 2**	**PP No. 3**
Design Flow (CFS)	93.7	44.6	56.1
Excavation Quantity (CY)	940	910	417
Concrete Volume (CY)	220	262	157
Wedgewire Fish Screen Panels	Size: 7.5’ x 7.5’ Qty: 6 Size: 2.5’ x 7.5’ Qty: 1	Size: 4’ x 4’ Qty: 11	Size: 6’ x 6’ Qty: 6
Approach Velocity (FPS)	0.33	0.32	0.32
Number of 4-ft. wide adult fish exclusion bays	5	9	4
Cost (Millions)	$2.18	$2.31	$1.82

Conical Fish Screen and Adult Fish Exclusion Barrier

- Make minor improvements to access roads and staging areas
- Remove existing headwall and flap gates
- Construct sheet-pile cofferdam to dewater work site
- Inspect gravity flow culverts
- Excavate earth at toe of levee
- Construct concrete pad and install conical fish screens
- Construct adult fish exclusion barrier
- Complete site finish work and erosion control

Table 2. Comparison of conical fish screens.

	PP No. 1	PP No. 2	PP No. 3
Design Flow (CFS)	93.7	44.6	56.1
Excavation Quantity (CY)	1025	605	401
Concrete Volume (CY)	150	176	114
Number of Conical Fish Screens	3	2	2
Approach Velocity (FPS)	0.31	0.22	0.28
Number of 4-ft. wide adult fish exclusion bays	5	9	4
Cost (Millions)	$2.07	$2.06	$1.71

Cylindrical Fish Screen and Adult Fish Exclusion Barrier

- Make minor improvements to access roads and staging areas
- Remove existing headwall and flap gates
- Construct sheet-pile cofferdam to dewater work site
- Inspect gravity flow culverts
- Excavate earth at toe of levee
- Construct concrete pad and install cylindrical fish screens
- Construct adult fish exclusion barrier
- Complete site finish work and erosion control

Table 3. Comparison of cylindrical fish screens.

	PP No. 1	PP No. 2	PP No. 3
Design Flow (CFS)	93.7	44.6	56.1
Excavation Quantity (CY)	945	590	442
Concrete Volume (CY)	150	174	119
Number of Fish Screens Cylinders	6	3	4
Approach Velocity (FPS)	0.28	0.32	0.30
Number of 4-ft. wide adult fish exclusion bays	5	9	4
Cost (Millions)	$2.28	$2.12	$1.79

Note: For cost savings comparison, a second cost estimate was made for the Pumping Plant No. 3 cylindrical fish screen alternative, eliminating construction of the concrete wall and slab for the juvenile fish screen portion of the project. In this option, only sloped earth excavation would be made, and the screen removal track would be extended as needed, to provide the required submerged depth of the screen. The estimated cost for this optional method of construction is about $1.6 million, a savings of about 11% compared to the cost listed in Table 3 above. However, potential increases in sediment buildup and debris damage to the screen could significantly increase operation and maintenance costs of this option.

Summary of Advantages and Disadvantages

Flat Plate Fish Screen

Advantages:

- Fish screen bay can be dewatered for inspection, sediment and debris clean-out, and screen maintenance
- No additional storage area required for fish screen panels
- Fish screen is protected by trashracks

Disadvantages:

- Large, permanent structure
- Fish screens cannot be removed without assistance of heavy equipment
- Heavy equipment will need to be driven on the structure for some maintenance activities
- Sediment may collect in bay downstream of fish screen when structure is inundated during periods of high runoff

Conical Fish Screen

Advantages:

- Lowest cost
- Fish screens can be removed for inspection, cleaning, or maintenance
- Less susceptible to silt build-up than other screen types
- Perforated plate fish screen may be easier to keep clean
- During times of low water demand, one screen (or two at PP1) could be removed to decrease maintenance

Disadvantages:

- Fish screens cannot be removed for inspection or repair without assistance of heavy equipment
- Area would be required for storage of fish screens when they are removed
- Debris collected in the connector pipe and culvert would be difficult to remove
- Water level in EBC would need to be lowered to clear sediment or debris collected around base of fish screen

Cylindrical Fish Screen

Advantages:

- Fish screens can be easily removed for inspection, cleaning, or maintenance, with the aid of a portable winch
- During times of low water demand, one screen (or two at PP1) could be removed to decrease maintenance

Disadvantages:

- Area would be required for storage of fish screens when they are removed
- Debris collected in the connector pipe and culvert would be difficult to remove
- Water level in EBC would need to be lowered to clear debris collected around base of fish screen

Conclusion

Site Conditions and Assumptions

The preliminary drawings and layouts contained in this report will be refined during the final design process. Additional surveys and hydraulic analyses may be necessary because of changes in the site conditions since this investigation was conducted and to gain additional information that will be required for final design.

Peak demand flows, used to determine the size of the fish screens, may change during a planning process now under consideration. Therefore, the sizes of the fish screens and associated structures may need to be modified during the final design process.

Codes and Standards

Final designs will be governed by the following criteria:

- Final fish screen designs must comply with current DFG Statewide Fish Screening Criteria design requirements and meet NOAA FisheriesFish Screening Criteria.
- Final structural designs will comply with the latest Uniform Building Code requirements.
- Final electrical designs will comply with the latest National Electrical Code.
- Final concrete designs will comply with the latest American Concrete Institute Building Code Requirements for Reinforced Concrete Design.
- All current applicable CalOSHA safety standards will be met.
- All environmental permit conditions will be met.

Final Design Instructions

Final designs will adhere to the following:

- Final designs will be subject to the approval of DFG, NOAA Fisheries, USFWS, DWR's DFM, and The Reclamation Board of California.
- A complete operations and maintenance manual will be produced prior to project completion.
- The elevations shown for the three sites are based on NAVD 88 Datum. Descriptions and elevations of control points can be obtained from ND.
- Actual concrete thickness, foundation requirements, and reinforcement requirements will be determined by the final design engineers.
- Cutoff walls and footings, used for cost estimating purposes, are not shown on the drawings. Actual dimensions will be determined by the final design engineers.
- Gates that are hydraulically or electrically operated should also be capable of being operated manually.
- Fish screen structural member dimensions are approximate. Actual dimensions will be determined by the final design engineers. The screen length shown may be adjusted depending on size, spacing and numbers of structural members, which will be determined by the final design engineers.

- All fish screen panels will be attached to the structural members so they can be removed for maintenance.
- The screens will be the continually cleaned type with a brush system, or an acceptable alternative approved by DFG and NOAA Fisheries.
- Foundation details and tie-ins to the existing culverts will be addressed in final design.
- Bridges, working platforms, grating, and foot ladders shown on drawings are approximate, and details will be provided in final design.

Pumping Plant No. 1

Introduction

Project Location

Pumping Plant No. 1 is located in Sutter County along the EBC of the Sutter Bypass near Yuba City, California (see 1Figure 1). The structure is about 16 miles south of Yuba City, approximately 3.5 miles southwest of the intersection of Highway 113 and the Sutter Bypass East Levee Road. The proposed project location is identified as “Pumping Station” on the U.S Geological Survey (USGS) Sutter Causeway Quadrangle, 7.5-minute series. An aerial photograph of the project site is shown below (Figure 4).

Figure 4. Aerial photograph of Pumping Plant No. 1.

Project Description

The proposed Pumping Plant No. 1 project consists of modifying the existing facility, which is owned and operated by DWR. Modifications, which include construction of a fish screen and an adult fish exclusion barrier, are designed to prevent losses of juvenile and adult fish to the drainage canals. The fish screen will prevent juvenile salmonids and steelhead trout from being drawn into the canals when water is being diverted for agricultural purposes. The adult exclusion barrier will prevent adult salmon and steelhead trout from migrating into the drainage canals when attraction flows are caused by drain water entering the EBC through the culverts.

The Pumping Plant No. 1 project area consists of two interrelated facilities, the old pumping plant and the new pumping plant. The old pumping plant facility (Figure 5), constructed in the 1930s, could be used as either a gravity flow or pumping facility. Gravity flow, in both directions, between the EBC and the agricultural lands to the east would be allowed through the pumps and culverts during certain portions of the year. If the water level in the drainage canals needed to be lowered and the water level in the EBC was high enough to prevent gravity flow, then the pumps were used to drain the canals. In the 1980s a new pumping facility was constructed downstream, and the pumps were removed from the older facility. The older facility is now used exclusively for gravity flow into and out of the EBC.

Figure 5. Photograph of old Pumping Plant No. 1 (looking toward the EBC).

The new pumping plant facility (Figure 6) serves exclusively to pump water out of the agricultural area and into the EBC. The pump outlet, consisting of four 36-inch diameter discharge pipes with flap gates, is located approximately

350 feet downstream of the outlet of the older facility. The invert of the outlets are about 3.5 feet higher than the normal sump WSEL, thus the new facility does not have the capability to allow gravity flow into the EBC.

Figure 6. Photograph of new Pumping Plant No. 1 and south toe drain (looking south).

This project focuses on modifications of the older pumping plant's gravity flow system. In the EBC, this system begins with three 4-foot wide by 6-foot tall culvert outlets, each equipped with a wooden flap gate (Figure 7). The flap gates are operational, and in the present configuration, a metal support makes it possible for two of the gates to be held in the open position allowing water to flow by gravity from the EBC into the agricultural area east of the levee. These culverts extend approximately halfway through the levee to the location of the levee slide gates. These vertical slide gates are used to control the flow of water through the culverts and help to maintain pool elevations inside and outside the levee. The culverts continue through the levee and terminate in the sump below the old pump house.

Old reports indicate that the 36-inch collars from the old pumps were left on the existing culverts below old pump house. These collars restrict the flow through the culverts. Prior to final design, these culverts will need to be dewatered and inspected, and any restrictions will need to be removed. The sump is connected to an un-named drain by a 6-foot diameter culvert, which is equipped with a vertical sliding gate (Sheet 2). The sump is also connected to the south toe drain by a 6-foot diameter culvert, which is equipped with a vertical slide gate. The vertical slide gate, connecting the sump to the south toe drain, operator is broken, and the gate is fixed in the ¾ open position.

Typically, the head differential between the EBC and the drains is zero. Thus, a small amount of water can be flowing out of or into the EBC with the culverts in the open position.

Figure 7. Photograph of headwall structure and submerged flap gates (looking downstream of EBC).

During periods of high runoff, when the Sutter Bypass WSEL is higher than the allowable WSELs in the drains outside the bypass, the flap gates and levee gates are closed. The new pumping plant then pumps water out of the drains and into the bypass.

When the water level is higher in the EBC than in the old pumping plant sump, water is allowed to flow out of the EBC and into drains where it can be pumped into the rice fields for irrigation or rice decomposition purposes. When water flows to the fields, it is supplied to the farmers through either the un-named drain, the North Toe Drain, or the South Toe Drain.

After project completion, when water is flowing out of the drains and into the EBC, water will flow through the adult fish exclusion barrier preventing adult upstream migrants from exiting the EBC. When water is flowing out of the EBC and into the drains, the new flap gates will close, and water will flow through the fish screen, preventing juvenile fish from being drawn out of the EBC.

Hydrology

The culverts constructed as part of the old Pumping Plant No. 1 facility are used to control drainage from a 28.4 square-mile area. Two of the existing

4 x 6-foot flap gates on the end of the culvert in the EBC can be hoisted open during the irrigation season to facilitate unrestricted gravity flow in both directions. Normally during irrigation season, water elevation adjustments are made at the Willow Slough Headgate Structure. A telemeter is used to monitor WSELs in the sump of new Pumping Plant No. 1.

According to a draft operations manual, DWR's Sutter Maintenance Yard staff maintains the water surface elevation (WSEL) in the EBC at the location of old Pumping Plant No. 1 between a low of 26.9 feet and a high of 28.9 feet (NAVD 88). The maximum elevation in the drainage canal, before pumping commences at the new pumping plant is 28.9 feet. Because Sutter Maintenance Yard staff tries to maintain WSELs in the EBC within a specific range over a variety of flows, a site-specific stage-discharge relationship does not exist.

Most high water at this structure will occur during winter months as a result of rain runoff. When it becomes necessary to lower water elevations at the old pumping plant, it is accomplished by opening the gates in the Willow Slough Headgate Structure. When all adjustments at Willow Slough have been made, and high water still exists in the EBC (WSEL greater than 28.9 feet), then all of the flap gates and the levee gates are closed and the new Pumping Plant No. 1 is used to pump excess water from the drainage canals into the EBC.

If the water supply is from the drainage canals and low water exists in the EBC (WSEL less than 26.9 feet), then the levee slide gates can be closed, or partially closed, to maintain head outside the levee. Closing the gates at Willow Slough will help raise the WSEL in the EBC.

Stage records for both the EBC and the drainage canals for water years 1990 through 1996 were analyzed, and a frequency curve was created (Appendix B). The stage differential versus time was plotted to analyze flow patterns. Based on 1,503 stage records over 7 water years (see Appendix B), recorded head differentials indicate water flowed from the EBC into the drainage canal approximately 14% of the time. A zero stage differential was recorded approximately 40% of the time, indicating there was no flow through the levee culverts. However, because the stage records were recorded to 0.05-foot accuracy, a recorded head differential of zero could have actually been a head differential of up to 0.1 foot. Therefore, it is possible that up to 11 cfs (based on Orifice Eq. with C_d = 0.6) could have been flowing out of or into the EBC through one culvert (with restriction) with the flap gate suspended in the open position. Water flowing into the EBC was observed approximately 10% of the time. The remaining 36% of the records occurred when the levee gates were closed, resulting in no flow through the culverts.

During the period of record when water was from the EBC into the drainage canals, the maximum observed head differential was 2.7 feet. Using the orifice equation (C_d =0.6), this equates to a flow of approximately 56 cfs

through one restricted culvert. Using the average observed head differential of 0.15 feet, the flow would be approximately 13 cfs through one restricted culvert.

The maximum observed head differential was 4.7 feet when the flow was from the drainage canals into the EBC and the three levee gates were in the fully open position. This equated to a flow of approximately 221 cfs through 3 restricted culverts. Using the average observed head differential of 1.03 feet, the flow would be approximately 104 cfs through 3 restricted culverts.

Adult Fish Exclusion Barriers

Sizing and Configuration

The purpose of the adult fish exclusion barrier is to prevent adult Chinook salmon and steelhead trout from leaving the Lower Butte Creek stream system. According to the USFWS manual *Fish Passageways and Bypass Facilities*, the maximum recommended spacing between vertical bars is 1.5 inches for Chinook salmon and 1 inch for steelhead trout. Because steelhead trout are present in the Sutter Bypass, 1-inch bar spacing will be used.

In determining the size of the exclusion barrier, the amount of submerged open area in the bar rack and the head loss through the bar rack were considered. It was decided that the bar rack assembly should have at least as much open area as the total area of the existing culverts, and the maximum allowable head loss should not exceed 0.1 feet. Using these design parameters, the three types of bars considered were round steel or aluminum bars, rectangular steel or aluminum bars, and rectangular polyethylene bars with rounded leading and trailing edges. The rectangular polyethylene bars with the rounded edges should provide the best combination of hydraulic performance, durability, and resistance to corrosion. These bars are comparable in cost to coated steel bars, weigh approximately 70 percent less, and inhibit aquatic plant growth.

Using a bar width of 0.5 inches with 1-inch clear space between bars, and a minimum probable water depth of 8.9 feet, five 4-foot wide bays are required to exceed the minimum desirable open area. The maximum probable velocity through the bar racks was calculated assuming a 1-foot head differential between the drainage canals and the EBC, and that all of the levee gates would be open. With a calculated flow of 352 cfs through the culverts, and a corresponding approach velocity of 3 fps, the head loss will be approximately 0.1 feet.

To allow for variations in the water depth in the EBC and to provide a minimum of 3 feet of freeboard, the excluder racks will be 15 feet tall for the flat plate screen or 16 feet tall for the conical and cylindrical screens (2 stacked sections). Each 4.33-foot wide rack will slide vertically down in a track formed by wide flange steel beams. A backhoe, boom truck, or other piece of equipment could be used to remove the racks for maintenance or repair. At about 7.4 pounds per square foot, each section would weigh approximately 241 pounds for the 15-foot tall section or approximately 257 pounds for the 16-foot tall section.

Operation and Maintenance

Operation and maintenance activities, to be performed by DWR personnel, will consist of periodic inspection and raking to prevent clogging. Except during floodflows, the debris load should be minimal because the water

flowing through the racks will come from the drainage canals, not from the Sutter Bypass. When the stage is higher in the EBC than in the drainage canals, the flap gates will close and there will be no flow through the adult exclusion barrier. The racks will rest within a track system to facilitate easy removal for inspection, major maintenance, or repairs.

Flat Plate Fish Screen Alternative

Sizing and Configuration

The flat plate fish screen design and required surface area of the screen were determined using the DFG Fish Screening criteria for steelhead trout and NOAA Fisheries Fish Screening criteria for anadromous salmonids. With a maximum allowable approach velocity of 0.33 fps for continually cleaned screens in streams and rivers, and a maximum diversion of 93.7 cfs, the required wetted screen area is 284 square feet. Adding 25 percent (71 square feet) to the required wetted area to compensate for reduction of screen area due to structural members, the required screen area becomes 355 square feet. Observed sweeping velocities at the location of the proposed fish screen range from 0 fps during low flow, to approximately 0.5 fps during high flow. Because of the existing gentle channel slope and slow velocities, the sweeping velocity criteria may not be met during certain flow conditions, depending on the amount of water being diverted.

Sheet 5 shows the plan and elevation view of the proposed fish screen layout. The flat plate fish screen will have a continuous cleaning type apparatus, which uses a sweeping brush controlled by a hydraulic motor located on the fish screen structure. The equipment used to power the hydraulic motor will be located in a small building located where it will not be inundated by high flows in the Sutter Bypass. The screen face will consist of removable panels of wedgewire set perpendicular to the reinforced concrete slab. The screen consists of six 7.5-foot square panels and one 2.5 x 7.5-foot panel, with a total area of 356 square feet. The square panels will allow the wedgewire to be oriented horizontally or vertically. Louvers will be installed behind the screen to ensure an even flow distribution through the face of the screen. The screen invert will be elevated 1.2 feet above the slab, in part to prevent sediment from interfering with fish screen operation (Sheet 10).

The Willow Slough Headgate Structure controls the WSEL in the EBC at the location of the proposed fish screen. The operating WSELs are maintained between 26.9 feet and 28.9 feet. The invert elevation for the proposed fish screen is set at 19.2 feet so that the fish screen will be completely submerged by 2.5 inches at the low WSEL. This will help ensure that the maximum allowable approach velocity will not be exceeded if the full diversion is being drawn while the WSEL in the EBC is at its minimum. The fish screen structure walls are 15-feet tall, leaving 4.1 feet of freeboard during high operating WSELs.

Trashracks will be built with 4-inch wide openings between vertical members and 18-inch clearance between horizontal members. The trashracks will be constructed 4 feet in front of the fish screen to prevent damage to the screen face from large floating debris. Each trashrack bay will be 4-feet wide

and 14-feet tall and will contain two trashrack sections 4.3-feet wide and 7-feet tall stacked one on top of another.

Two 6-foot wide x 4-foot tall automated vertical slide gates, shown on Sheet 5, will be installed to control flow from the EBC into the drainage canals. The gates were sized so that no parts are extruding above the structure wall.

Three 4-foot x 6-foot flap gates, shown on Sheet 5, will be installed to allow flow from the drainage canals into the EBC and prevent flow from returning when the WSELs are higher in the EBC than in the drainage canals. To ensure the flow through the culverts is not restricted, the proposed flap gates are the same size as the existing gates. An adult fish exclusion barrier, as described in the previous section, will be installed in front of the flap gates to prevent adult salmon and steelhead trout from entering and getting trapped in the drainage canals.

Stage sensors will be installed on the upstream and downstream side of the slide gates to ensure fish screen approach velocity criteria are met. The primary function of the sensors is to monitor the flow through the gates as a function of the head differential across the gates. These sensors may serve to actuate controls to throttle the gates for flow control, send an alarm, or shut down the diversion if an undesirable condition is sensed. A flow direction sensor will be installed in the diversion culverts to detect when flow is entering the EBC from the drainage canals. This sensor will trigger an action to close the vertical slide gates, thus preventing backflow through the fish screen when flow is entering the EBC through the culverts and flap gates.

Steel grating will be used to cover the entire screen bay to help ensure the safety of personnel working on or around the structure, and to help prevent large debris from entering the screen bay when the stage in the EBC is high. The grating will also be used as a walkway and working platform to access the trashracks and adult exclusion barrier for maintenance activities.

Operation and Maintenance

Access to the site for normal operation and maintenance will be via the existing lower levee road that leads to the proposed fish screen structure, as shown on sheets 2 and 4. An access bridge will be constructed across the fish screen bay and across the adult exclusion bay, as shown on Sheet 5, for equipment used during maintenance activities.

Sutter Maintenance Yard staff will operate and maintain the fish screen structure. Operational requirements will include daily checks to ensure that the screen cleaning equipment is functioning properly. Maintenance responsibilities include the periodic repair or replacement of the brush cleaning system components, occasional cleaning of sediment from the screen bay, checking the

operation of gates and culverts, and clearing obstructions and debris. Most floating debris will be deflected by or captured on trashracks that will require periodic manual cleaning.

If a maintenance problem occurs that requires the screen to be removed from service, the structure can be dewatered while repairs are made. Included in this design are bulkheads that can be installed in the trashrack bays. With the bulkheads installed and the vertical slide gates closed, the water can be pumped out of the screen bay. If necessary, a boom truck or other equipment can be used to remove fish screen panels or components.

An additional operational requirement will be to maintain stage sensors upstream and downstream of the vertical slide gates and the flow directional sensor in the culvert. Sutter Maintenance Yard staff will need to ensure that the sensors continue to operate under design parameters.

Conical Fish Screen Alternative

Sizing and Configuration

The conical fish screen design and required surface area of the screen are controlled by the DFG Fish Screening criteria for steelhead trout and NOAA Fisheries Fish Screening criteria for anadromous salmonids. With a maximum allowable approach velocity of 0.33 fps for continually cleaned screens in streams and rivers, cone screen manufacturer specifications state that 121-inch base diameter by 37-inch tall cone screens have a capacity of 33 cfs. Observed sweeping velocities at the location of the proposed fish screen ranges from 0 fps during low flow, to approximately 0.5 fps during high flow. Because of the existing gentle channel slope and slow velocities, the sweeping velocity criteria may not be met during certain flow conditions, depending on the amount of water being diverted.

Sheet 7 shows the plan and sections view of the conical fish screen layout. Because each screen has a capacity of 33 cfs, and the potential diversion amount is 93.7 cfs, three conical fish screens are required. This design configuration results in a maximum approach velocity of 0.31 fps at the design flow of 93.7 cfs. Each conical fish screen will have a continuous cleaning type apparatus with a rotating sweeping brush controlled by a hydraulic motor located inside the fish screen. The equipment used to power the hydraulic motor will be in a small building located where it will not be inundated by high flows in the Sutter Bypass.

The screen face will consist of a perforated plate material set in a cone-shaped frame supported by columns that will rest on the reinforced concrete slab. There will be three 121-inch base diameter, 22-inch top diameter by 37-inch tall conical screens (Sheet 10). Adjustable louvers will be installed inside the screens to provide velocity control through the screen. The louvers are adjusted by turning a rod that extends through the screen face. The base of the fish screen will be raised above the concrete floor to prevent sediment from interfering with fish screen operation. Eight columns will be anchored to the floor to support the fish screens and to aid in screen removal and installation.

The Willow Slough Headgate Structure controls the WSEL in the EBC at the location of the proposed fish screen. The operating WSELs are maintained between 26.9 feet and 28.9 feet. The invert elevation for the proposed fish screen is set at 21.0 feet so that the top of the fish screen will be submerged approximately 2.6 feet at the low WSEL condition. This will help ensure that the maximum allowable approach velocity will not be exceeded if the full diversion is being drawn while the WSEL in the EBC is at its minimum operating level.

Screened water will pass through a short section of 30-inch diameter pipe, and then into a 4-foot square concrete box culvert. At the end of the culvert there

will be one 4-foot square slide gate, shown on Sheet 7, which will be installed to control flow from the EBC into the drainage canals.

Three 4-foot x 6-foot flap gates, shown on Sheet 7, will be installed to allow flow from the drainage canals into the EBC and, in combination with the new slide gate, prevent flow out of the EBC, except through the new fish screen. To ensure the flow through the culverts is not restricted, the proposed flap gates are the same size as the existing gates. An adult fish exclusion barrier, as described in a previous section, will be installed in front of the flap gates to prevent adult salmon and steelhead trout from entering and getting trapped in the drainage canals.

Stage sensors will be installed on the upstream and downstream side of the slide gate to ensure fish screen approach velocity criteria are met. The primary function of these sensors is to monitor the flow through the gates as a function of the head differential across the gates. These sensors may serve to actuate controls to throttle the gates for flow control, send an alarm, or shut down the diversion if an undesirable condition is sensed. A flow direction sensor will be installed in the culverts to detect when flow is entering the EBC from the drainage canals. This sensor will trigger an action to close the vertical slide gate, thus preventing backflow through the fish screen when flow is entering the EBC through the culverts and flap gates. Because of the high turbidity of the water in the EBC, each fish screen will be equipped with sensors to alert maintenance personnel of potential problems.

Operation and Maintenance

Access to the site for normal operation and maintenance will be via the existing lower levee road that leads to the proposed fish screen structure, as shown on sheets 2 and 6.

Sutter Maintenance Yard staff will operate and maintain the fish screen structure. Operational requirements will include daily checks to ensure that the screen cleaning equipment is functioning properly. Maintenance responsibilities include periodically repairing or replacing the brush cleaning system components, occasionally cleaning sediment from around the screens, checking the operation of gates and culverts, and clearing obstructions and debris. Most floating debris should pass over the top of the fish screens, but some debris may get caught on the screen support columns.

If a maintenance problem occurs that requires the screen to be removed from service, the screens can be lifted out of the EBC using a boom truck or similar equipment. If necessary, the fish screens could be dewatered in place by opening the gates at the Willow Slough Headgate Structure.

An additional operational requirement will be to maintain stage sensors upstream and downstream of the vertical slide gates and the flow direction sensor in the culvert. Sutter Maintenance Yard staff will need to ensure that the sensors continue to operate under design parameters.

Cylindrical Fish Screen Alternative

Sizing and Configuration

The cylindrical fish screen design and required surface area of the screen were determined using the DFG Fish Screening criteria for steelhead trout, and NOAA Fisheries Fish Screening criteria for anadromous salmonids (Appendix D). With a maximum allowable approach velocity of 0.33 fps for continually cleaned screens in streams and rivers, cylindrical screen manufacturers specifications state that 36-inch diameter by 5-foot long cylindrical screens have a capacity of 17.5 cfs. Observed sweeping velocities at the location of the proposed fish screen range from 0 fps during low flow to approximately 0.5 fps during high flow. Because of the existing gentle channel slope and slow velocities, the sweeping velocity criteria may not be met during certain flow conditions, depending on the amount of water being diverted.

Sheet 9 shows the plan and sections view of the fish screen layout. Because each screen has a capacity of 17.5 cfs with a 0.3 fps approach velocity (according to the manufacturer) and the potential diversion amount is 93.7 cfs, six cylindrical screens are required. Each cylindrical fish screen will have a continuous cleaning type apparatus, which consists of a fixed brush head pressing against a rotating drum. The drum is rotated by a hydraulic motor located inside the fish screen. The equipment used to power the hydraulic motor will be located in a small building where it will not be inundated by high flows in the Sutter Bypass.

The screen face will consist of wedgewire attached to a cylindrical frame resting on a track system attached to the reinforced concrete slab. There will be six 36-inch diameter by 5-foot long cylindrical screens (Sheet 10). The fish screen manufacturer will be responsible for ensuring that there is equal flow through each fish screen. The base of the fish screen will be raised above the concrete floor to prevent sediment from interfering with the fish screen operation.

The Willow Slough Headgate Structure controls the WSEL in the EBC at the location of the proposed fish screen. The operating WSELs are maintained between 26.9 feet and 28.9 feet. The invert elevation for the proposed fish screen is set at 20.5 feet so that the top of the fish screen will be submerged by approximately 2.6 feet at the low WSEL condition and to meet the manufacturers recommendation to keep at least one-half screen diameter of water above the screen at all times. The screen being fully submerged at the low WSEL will help ensure that the maximum allowable approach velocity will not be exceeded if the full diversion is being drawn while the WSEL in the EBC is at its minimum operating level.

Screened water will pass through a short section of 3-foot square culvert, and then into a 4-foot square concrete box culvert. At the end of the culvert there

will be a 4-foot square slide gate, shown on Sheet 9, which will be installed to control flow from the EBC into the drainage canals.

Three 4-foot x 6-foot flap gates, shown on Sheet 9, will be installed to allow flow from the drainage canals into the EBC and, in combination with the new slide gate, prevent flow out of the EBC, except though the new fish screen. To ensure the flow through the culverts is not restricted, the proposed flap gates are the same size as the existing gates. An adult fish exclusion barrier, as described in a previous section, will be installed in front of the flap gates to prevent adult salmon and steelhead trout from entering and getting trapped in the drainage canals.

Stage sensors will be installed on the upstream and downstream side of the slide gate to ensure fish screen approach velocity criteria are met. The primary function of the sensors is to monitor the flow through the gates as a function of the head differential across the gates. These sensors may serve to actuate controls to throttle the gates for flow control, send an alarm, or shut down the diversion if an undesirable condition is sensed. A flow direction sensor will be installed in the diversion culverts to detect when flow is entering the EBC from the drainage canals. This sensor will trigger an action to close the vertical slide gate, thus preventing backflow through the fish screen, when flow is entering the EBC through the culverts and flap gates.

Operation and Maintenance

Access to the site for normal operation and maintenance will be via the existing lower levee road that leads to the proposed fish screen structure, as shown on sheets 2 and 8.

Sutter Maintenance Yard staff will operate and maintain the fish screen structure. Operational requirements will include daily checks to ensure that the screen cleaning equipment is functioning properly. If necessary, the fish screens can be hoisted out of the water, using a winch, for inspection. When the fish screens are lowered back down the track into the water, a sensor indicates when the screen is properly docked in place. Maintenance responsibilities include periodically repairing or replacing the brush cleaning system components, occasionally cleaning sediment from around the screens, checking the operation of gates and culverts, and clearing obstructions and debris. Most floating debris should pass over the top of the fish screens, but some debris may get caught on the screen removal track system.

If a maintenance problem occurs that requires the screen to be removed from service, the screens can be hoisted out of the EBC using a winch and the included cable system. If necessary, the fish screens could be dewatered in place by opening up the gates at the Willow Slough Headgate Structure.

An additional operational requirement will be to maintain stage sensors upstream and downstream of the vertical slide gate and the flow direction sensor in the culvert. Sutter Maintenance Yard staff will need to ensure that the sensors continue to operate under design parameters.

Design and Construction Summary

Site Geology and Environmental Documentation

Concurrent with the preliminary design process, the DOE Project Geology Section was investigating site geology. Results of this investigation are contained in Geology Report No. 94-00-17, a memorandum report.

During the geologic investigation, Project Geology staff reviewed site history and gathered existing geologic data. The results from the three boreholes, drilled in 1979 as part of a foundation investigation for the new pumping plant, are included in the memorandum report. Two additional holes were drilled in October 2001 at the location of the proposed fish facility structures to help define the subsurface conditions where structure foundations will be located. The information from past and recent investigations will be used for the final design of footings and cutoff walls and to help determine dewatering requirements. The project area will probably be dewatered using sheet-piles and pumps. Water levels can be lowered by opening the gates at the Willow Slough Headgate Structure.

On April 30, 2001, ND environmental scientists performed an environmental site survey of the project area. The purpose of this survey was to investigate potential impacts to sensitive plants, fish and wildlife, water quality, recreation, and land use. Appendix C contains a list of environmental permits potentially required and an environmental checklist form for the proposed project. No threatened or endangered species were identified within the project area.

Construction Summary

After a design alternative is selected for each site and funding is procured, DOE will complete the final designs and specifications. The DOE Contract Services Branch will administer the construction contract. Construction inspection will be performed by DWR Sacramento Project Headquarters.

Construction access for this site is proposed from Highway 113 to the Sutter Bypass east levee road. The existing levee roads are predominantly gravel surfaced, but there are sections on the lower roads that are unimproved. These roads are presently in good condition. From the levee top to the project area, there is a one-lane unimproved road section approximately 365 feet long. The access road and the potential staging areas may require construction easements. If the existing roads are damaged during the construction process, they should be repaired prior to project completion.

The limits of the construction, staging areas, and access roads should be marked and managed to prevent vehicular access outside the designated work zone. In addition to the designated staging area, a small storage area may have

to be constructed to store equipment and fuel. The old pump house may also be used to store some equipment.

Temporary sheet-pile cofferdams may be built around the construction area. This area will be dewatered prior to and during construction activities. The EBC is relatively wide at the project site, so the dewatering process will not significantly impact flow in the EBC.

In the old pumping plant gravity flow culverts, any old connections or collars that could restrict the flow through the culverts will need to be removed. At the EBC end of the culverts, the existing flap gates and headwall will need to be removed.

Excavation will be required at the toe of the levee at the site of the existing headwall, and also in the area immediately upstream of the headwall where the fish screen will be located. Excavated concrete and earth will be hauled to a disposal site, which will be determined by the contractor, and will be subject to DWR approval.

The fish screen and adult exclusion barrier will then be constructed. A small building will need to be constructed near the top of the levee that will house mechanical and electrical equipment needed for the operation of the fish screen cleaning and flow monitoring mechanisms. After construction, backfilling, site finish work, and erosion control will be completed.

Table 4. Flat plate fish screen alternative preliminary cost estimate.

Pumping Plant No. 1 - Flat Plate Fish Screen Alternative
Preliminary Cost Estimate for Design and Construction

ITEM	DESCRIPTION	QUANTITY	UNIT	UNIT COST	TOTAL COST
	MISCELLANEOUS				
1	Mobilization/Demobilization	1	LS	$ 75,000	$ 75,000
2	Site Work, Access & Mitigation	1	LS	$ 22,000	$ 22,000
3	Dewatering	1	LS	$ 230,000	$ 230,000
4	Remove Existing Headwall and Gates	30	CY	$ 300	$ 9,000
					$ 336,000
	ADULT FISH EXCLUSION BARRIER				
5	Excavation	110	CY	$ 15	$ 2,000
6	Sheet-piles	1300	SF	$ 26	$ 34,000
7	H-piles	18	EA	$ 1,000	$ 18,000
8	Concrete (Walls)	60	CY	$ 800	$ 48,000
9	Concrete (Slab)	30	CY	$ 500	$ 15,000
10	Gates & Brackets (Flap Gates)	3	LS	$ 5,200	$ 16,000
11	Fish Excluder Racks	75	SF	$ 50	$ 4,000
12	Excluder Rack Metalworks	1	LS	$ 2,000	$ 2,000
13	Working Platform	145	SF	$ 25	$ 4,000
14	Grating	300	SF	$ 25	$ 8,000
15	Steel Beam and Wood Access Bridge	1	EA	$ 4,000	$ 4,000
					$ 155,000
	FISH SCREEN				
16	Excavation	830	CY	$ 15	$ 12,000
17	Sheet-piles	2830	SF	$ 26	$ 74,000
18	H-piles	23	EA	$ 1,000	$ 23,000
19	Concrete (Walls)	70	CY	$ 800	$ 56,000
20	Concrete (Slab)	45	CY	$ 500	$ 23,000
21	Concrete (Access Bridge)	15	CY	$ 800	$ 12,000
22	Gates & Brackets (Fish Screen Control)	2	EA	$ 14,000	$ 28,000
23	Wedgewire Screen & Installation	357	SF	$ 150	$ 54,000
24	Louvers & Installation	357	SF	$ 100	$ 36,000
25	Screen Cleaning System	1	LS	$ 18,000	$ 18,000
26	Electrical Control Unit (Screen Cleaner)	1	LS	$ 15,000	$ 15,000
27	Trash Rack	695	SF	$ 26	$ 18,000
28	Trash Rack Metalwork	1	LS	$ 7,000	$ 7,000
29	Grating	750	SF	$ 25	$ 19,000
30	Stage & Flow Sensors	3	EA	$ 10,000	$ 30,000
31	Electrical Control Unit (Sensors and Gates)	1	LS	$ 30,000	$ 30,000
32	Control Unit Building	1	LS	$ 20,000	$ 20,000
33	Dewatering Panels	720	SF	$ 7	$ 5,000
					$ 480,000
34	**Construction Cost**				**$ 971,000**
35	**Contingency @ 25%**				$ 243,000
36	**Construction Cost Subtotal**				**$ 1,214,000**
37	**Engineering @ 50%**				$ 607,000
38	**Environmental @ 3%**				$ 36,000
39	**Construction Inspection @ 15%**				$ 182,000
40	**Contract Admin @ 10%**				$ 121,000
41	**Total**				**$ 2,160,000**

Table 5. Conical fish screen alternative preliminary cost estimate.

Pumping Plant No. 1 - Conical Fish Screen Alternative
Preliminary Cost Estimate for Design and Construction

ITEM	DESCRIPTION	QUANTITY	UNIT	UNIT COST	TOTAL COST
	MISCELLANEOUS				
1	Mobilization/Demobilization	1	LS	$ 75,000	$ 75,000
2	Site Work, Access & Mitigation	1	LS	$ -	$ -
3	Dewatering	1	LS	$ 230,000	$ 230,000
4	Remove Existing Headwall and Gates	30	CY	$ 300	$ 9,000
					$ 314,000
	ADULT FISH EXCLUSION BARRIER				
5	Excavation	70	CY	$ 15	$ 1,000
6	Sheet-piles	1170	SF	$ 26	$ 30,000
7	H-pile	18	EA	$ 1,000	$ 18,000
8	Concrete (Walls & Culvert)	55	CY	$ 800	$ 44,000
9	Concrete (Slab)	20	CY	$ 500	$ 10,000
10	Gates & Brackets (Flap Gates)	3	EA	$ 5,200	$ 16,000
11	Fish Excluder Racks	80	SF	$ 50	$ 4,000
12	Excluder Rack Metalworks	1	EA	$ 2,000	$ 2,000
13	Working Platform	145	SF	$ 25	$ 4,000
					$ 129,000
	FISH SCREEN				
14	Excavation	955	CY	$ 15	$ 14,000
15	Sheet-piles	2760	SF	$ 26	$ 72,000
16	H-pile	7	EA	$ 1,000	$ 7,000
17	Concrete (Walls)	40	CY	$ 800	$ 32,000
18	Concrete (Slab)	35	CY	$ 500	$ 18,000
19	Gates & Brackets (Fish Screen Control)	1	EA	$ 11,000	$ 11,000
20	Wedgewire Screen & Installation	3	EA	$ 84,000	$ 252,000
21	Stage & Flow Sensors	3	EA	$ 10,000	$ 30,000
22	Electrical Control Unit (Sensors and Gates)	1	LS	$ 30,000	$ 30,000
23	Control Unit Building	1	LS	$ 20,000	$ 20,000
					$ 466,000
24	**Construction Cost**				**$ 909,000**
25	**Contingency @ 25%**				$ 227,000
26	**Construction Cost Subtotal**				**$ 1,136,000**
27	**Engineering @ 50%**				$ 568,000
28	**Environmental @ 3%**				$ 34,000
29	**Construction Inspection @ 15%**				$ 170,000
30	**Contract Admin @ 10%**				$ 114,000
31	**Total**				**$ 2,022,000**

Table 6. Cylindrical fish screen alternative preliminary cost estimate.

Pumping Plant No. 1 - Cylindrical Fish Screen Alternative
Preliminary Cost Estimate for Design and Construction

ITEM	DESCRIPTION	QUANTITY	UNIT	UNIT COST	TOTAL COST
	MISCELLANEOUS				
1	Mobilization/Demobilization	1	LS	$ 75,000	$ 75,000
2	Site Work, Access & Mitigation	1	LS	$ 76,000	$ 76,000
3	Dewatering	1	LS	$ 230,000	$ 230,000
4	Remove Existing Headwall and Gates	30	CY	$ 300	$ 9,000
					$ 390,000
	ADULT FISH EXCLUSION BARRIER				
5	Excavation	70	CY	$ 15	$ 1,000
6	Sheet-piles	1180	SF	$ 26	$ 31,000
7	H-piles	18	EA	$ 1,000	$ 18,000
8	Concrete (Walls & Culvert)	55	CY	$ 800	$ 44,000
9	Concrete (Slab)	20	CY	$ 500	$ 10,000
10	Gates & Brackets (Flap Gates)	3	EA	$ 5,200	$ 16,000
11	Fish Excluder Racks	80	SF	$ 50	$ 4,000
12	Excluder Rack Metalworks	1	EA	$ 2,000	$ 2,000
13	Working Platform	145	SF	$ 25	$ 4,000
					$ 130,000
	FISH SCREEN				
14	Excavation	875	CY	$ 15	$ 13,000
15	Sheet-piles	3040	SF	$ 26	$ 79,000
16	H-piles	9	EA	$ 1,000	$ 9,000
17	Concrete (Walls)	45	CY	$ 800	$ 36,000
18	Concrete (Slab)	30	CY	$ 500	$ 15,000
19	Gates & Brackets (Fish Screen Control)	1	EA	$ 11,000	$ 11,000
20	Wedgewire Screen & Installation	3	EA	$ 94,000	$ 282,000
21	Stage & Flow Sensors	3	EA	$ 10,000	$ 30,000
22	Electrical Control Unit (Sensors and Gates)	1	LS	$ 30,000	$ 30,000
23	Control Unit Building	1	LS	$ 20,000	$ 20,000
					$ 505,000
24	**Construction Cost**				**$ 1,025,000**
25	**Contingency @ 25%**				$ 256,000
26	**Construction Cost Subtotal**				**$ 1,281,000**
27	**Engineering @ 50%**				$ 641,000
28	**Environmental @ 3%**				$ 38,000
29	**Construction Inspection @ 15%**				$ 192,000
30	**Contract Admin @ 10%**				$ 128,000
31	**Total**				**$ 2,280,000**

PRELIMINARY ENGINEERING DRAWINGS FOR

LOWER BUTTE CREEK PROJECT
SUTTER BYPASS
PUMPING PLANT NO. 1
FISH SCREENING PROJECT

SUTTER COUNTY, CALIFORNIA

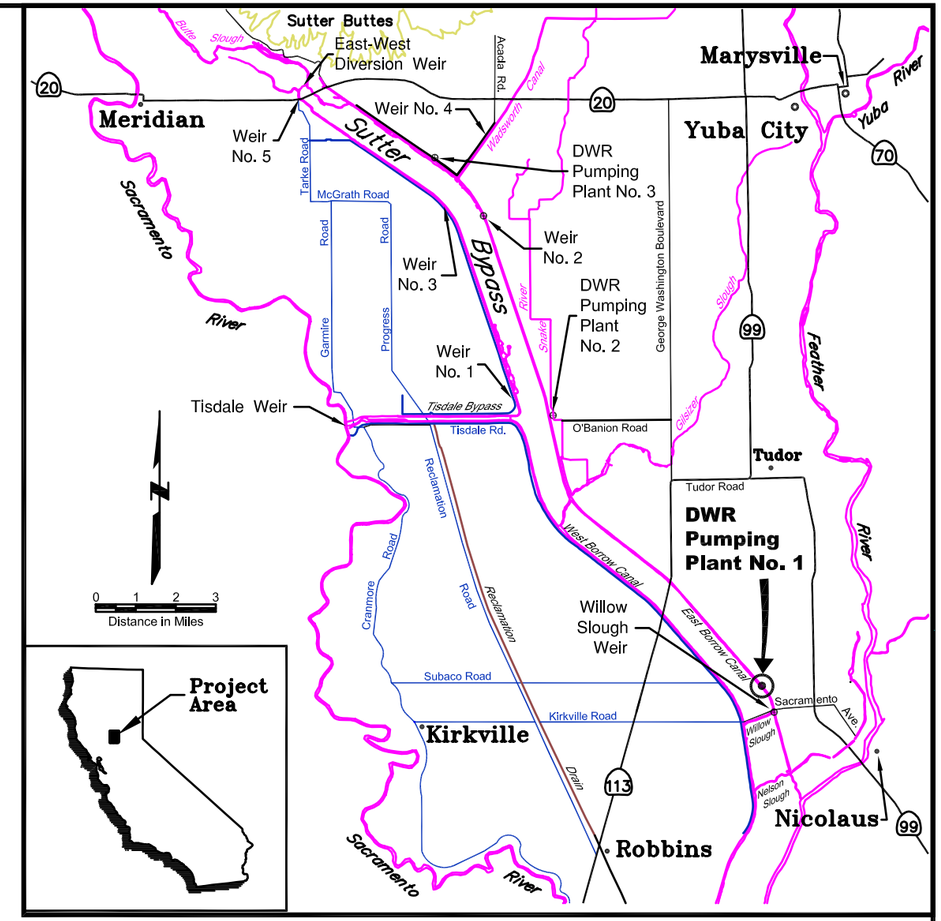

PRELIMINARY
SUBJECT TO REVISION

INDEX OF SHEETS

Sheet 1 of 30 – Title Sheet and Area Map
Sheet 2 of 30 – General Plan
Sheet 3 of 30 – Isometric Views
Sheet 4 of 30 – Flat Plate Fish Screen Site Plan
Sheet 5 of 30 – Flat Plate Fish Screen Plan and Elevation
Sheet 6 of 30 – Conical Fish Screen Site Plan
Sheet 7 of 30 – Conical Fish Screen Plan and Sections
Sheet 8 of 30 – Cylindrical Fish Screen Site Plan
Sheet 9 of 30 – Cylindrical Fish Screen Plan and Sections
Sheet 10 of 30 – Fish Screen Details

Note: All Proposed Work Denoted in Upper Case Text

PUMPING PLANT NO. 1 Sutter Bypass near Yuba City, California	Title Sheet and Area Map	STATE OF CALIFORNIA THE RESOURCES AGENCY DEPARTMENT OF WATER RESOURCES NORTHERN DISTRICT Revision Date: March 6, 2002	Drawing: 3_title_and_loc_maps_1.1.dwg Sheet 1 of 30

Note:
1) Aerial photograph taken June 30, 2000.

0 100 200
Scale in Feet

PUMPING PLANT NO. 1 Sutter Bypass near Yuba City, California	General Plan	STATE OF CALIFORNIA THE RESOURCES AGENCY DEPARTMENT OF WATER RESOURCES NORTHERN DISTRICT Revision Date: March 19, 2002	Drawing: PP1_topo.dwg Sheet 2 of 30

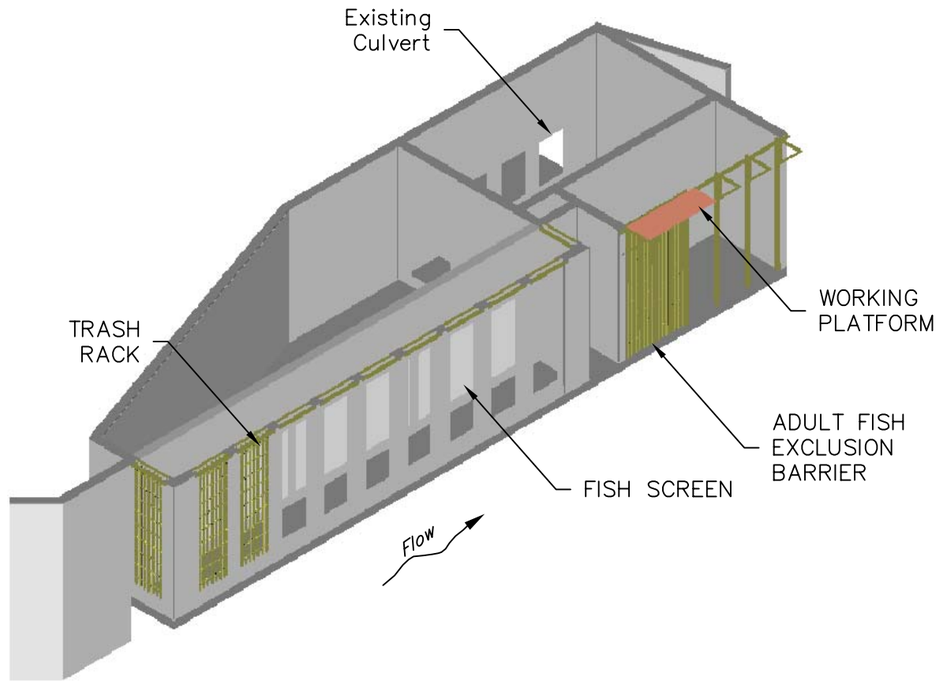

Flat Plate Fish Screen

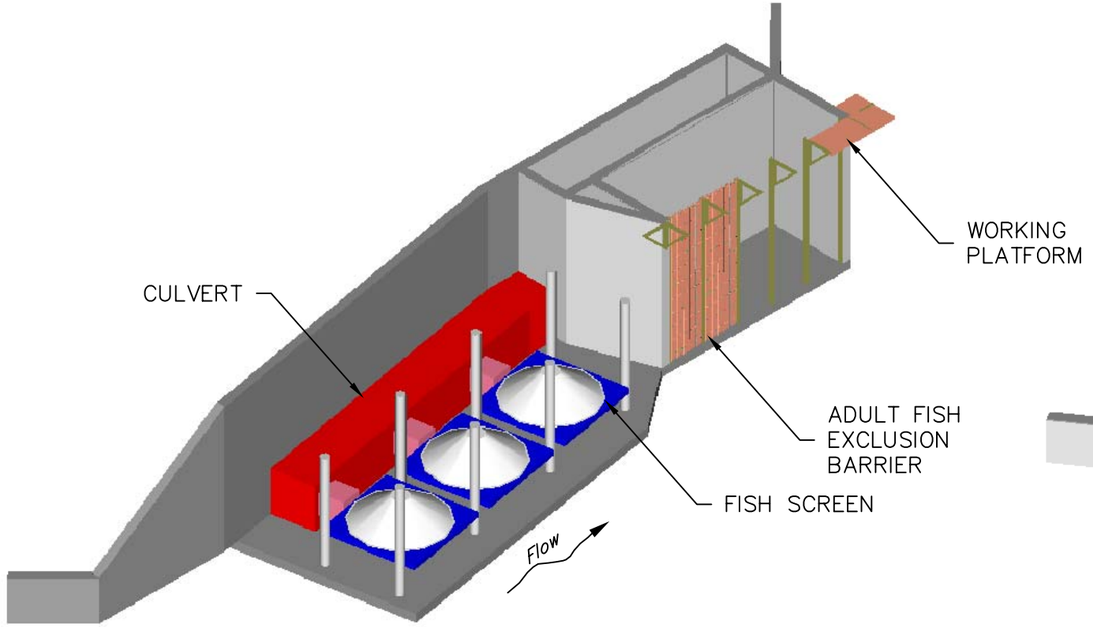

Conical Fish Screen

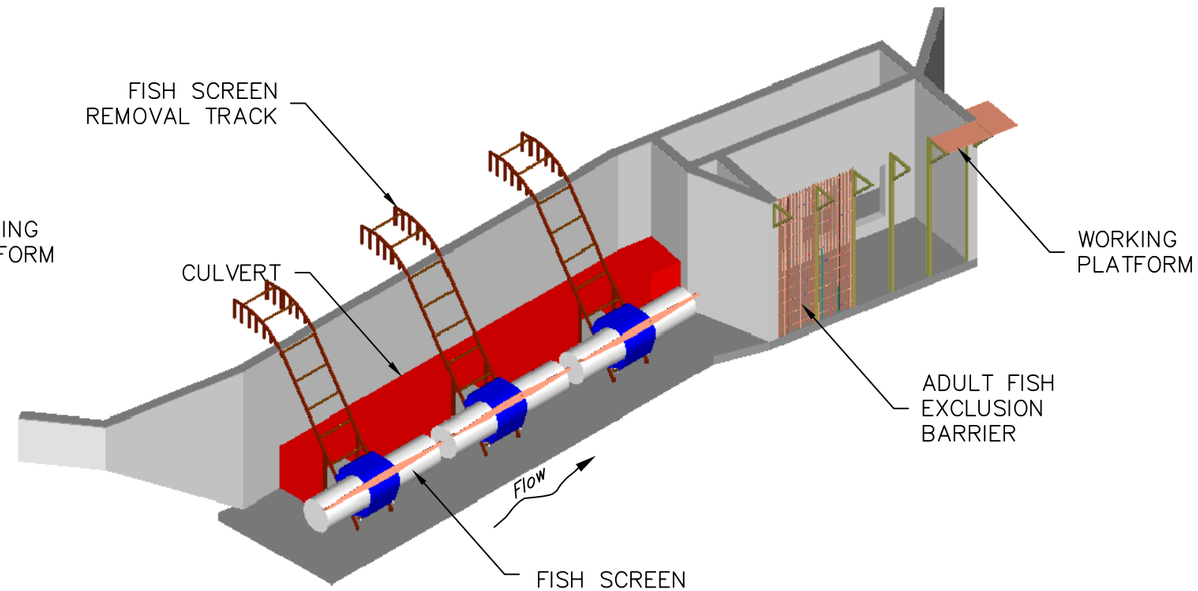

Cylindrical Fish Screen

File name: Views_b.dwg

PUMPING PLANT NO. 1 Sutter Bypass near Yuba City, California	Isometric Views	STATE OF CALIFORNIA THE RESOURCES AGENCY DEPARTMENT OF WATER RESOURCES NORTHERN DISTRICT	Drawing: Views_b.dwg
		Revision Date: March 21, 2002	Sheet 3 of 30

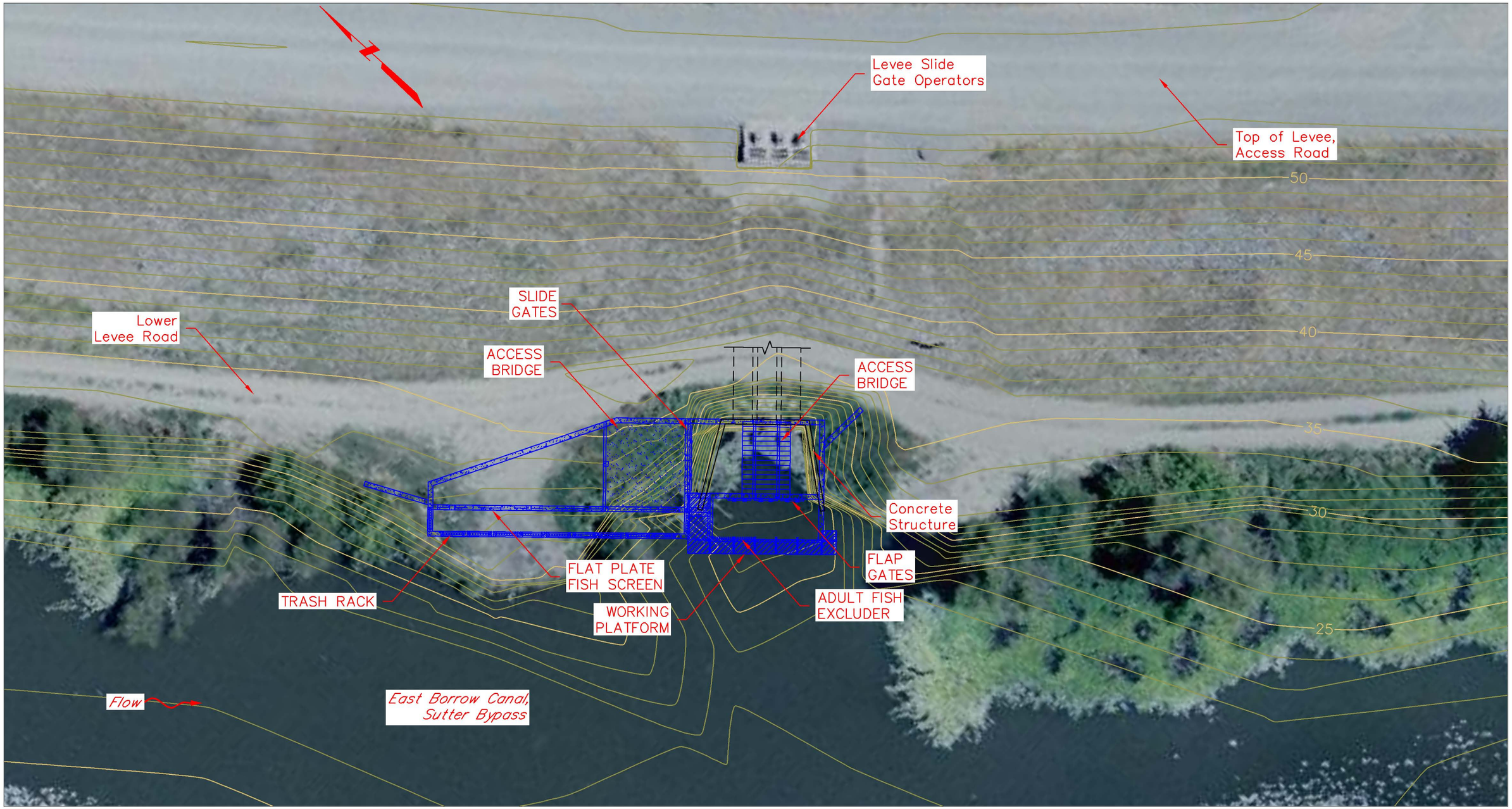

Notes:
1) Aerial photograph taken June 30, 2000.
2) Vertical datum NAVD 88, feet.
3) Contour interval = 1 foot.

0 20 40
Scale in Feet

PUMPING PLANT NO. 1 Sutter Bypass near Yuba City, California	Flat Plate Fish Screen Site Plan	STATE OF CALIFORNIA THE RESOURCES AGENCY DEPARTMENT OF WATER RESOURCES NORTHERN DISTRICT	Drawing: PP1_topo
		Revision Date: March 21, 2002	Sheet 4 of 30

Notes:
1) Vertical datum NAVD 88, feet.
2) Survey performed July 2000.
3) See Sheet 10 for fish screen detail.
4) Fish screen cleaning mechanism not shown.
5) Footings/sheet-pile cutoff walls not shown.
6) 3 adult excluder sections not shown.
7) 8 trash rack sections not shown.

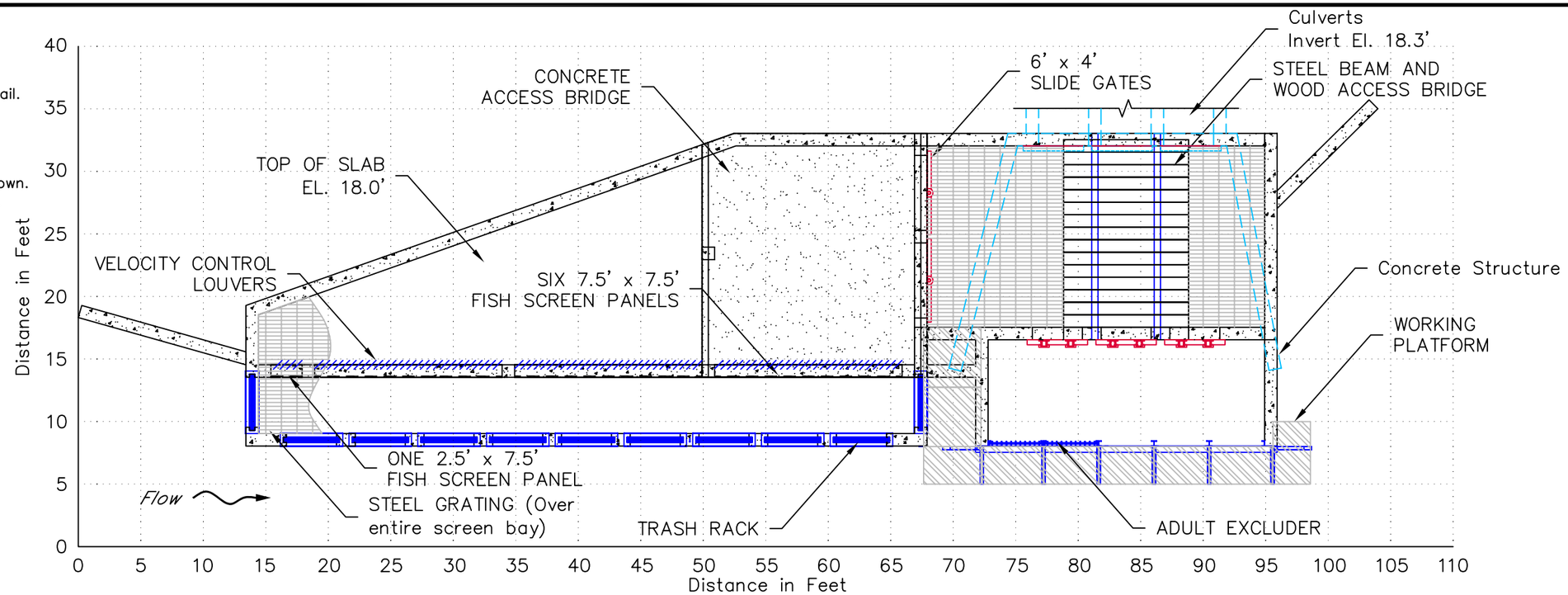

Plan

Scale: 1" = 10'

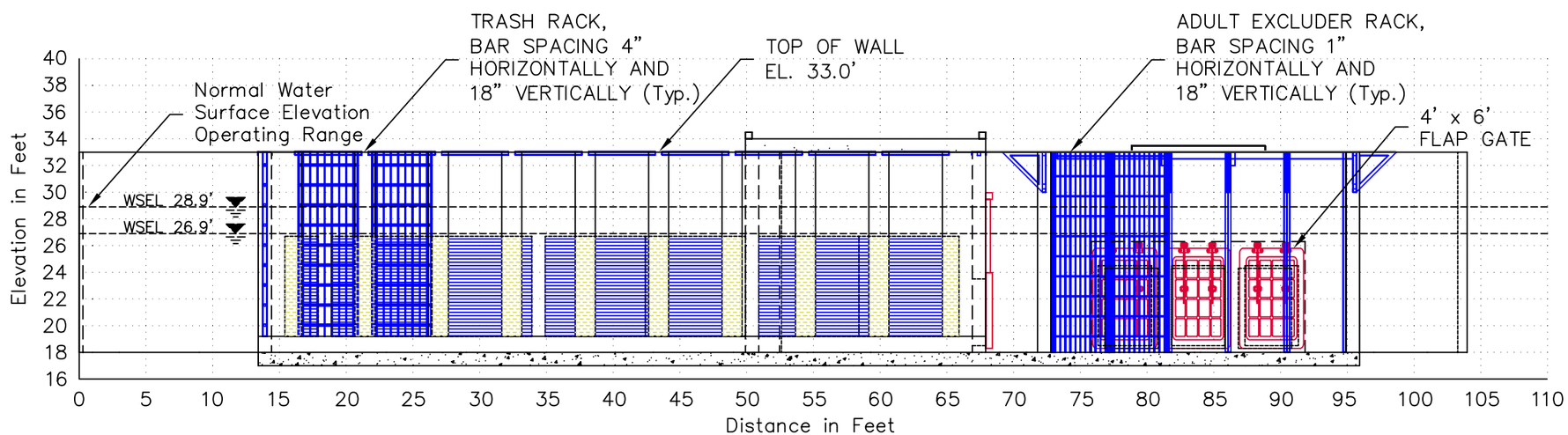

Elevation

Scale: 1" = 10'

PUMPING PLANT NO. 1 Sutter Bypass near Yuba City, California	Flat Plate Fish Screen Plan and Elevation	STATE OF CALIFORNIA THE RESOURCES AGENCY DEPARTMENT OF WATER RESOURCES NORTHERN DISTRICT Revision Date: March 19, 2002	Drawing: flat_plate_plan _and_elevation Sheet 5 of 30

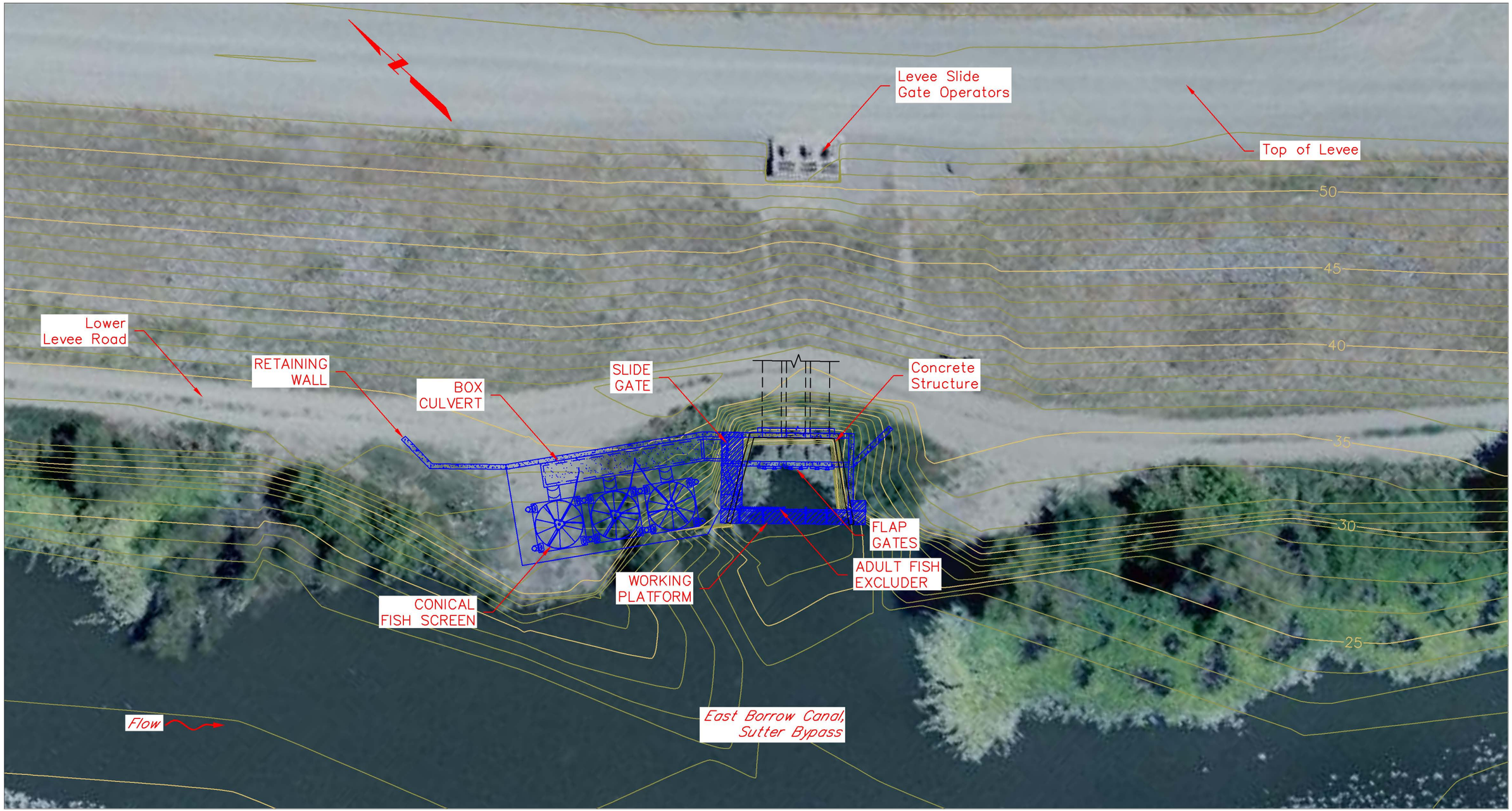

Notes:
1) Aerial photograph taken June 30, 2000.
2) Vertical datum NAVD 88, feet.
3) Contour interval = 1 foot.

0 20 40
Scale in Feet

PUMPING PLANT NO. 1 Sutter Bypass near Yuba City, California	Conical Fish Screen Site Plan	STATE OF CALIFORNIA THE RESOURCES AGENCY DEPARTMENT OF WATER RESOURCES NORTHERN DISTRICT Revision Date: March 21, 2002	Drawing: PP1_topo Sheet 6 of 30

Notes:
1) Vertical datum NAVD 88, feet.
2) Survey performed July 2000.
3) See Sheet 10 for fish screen detail.
4) Footings/sheet-pile cutoff walls not shown.
5) 3 adult excluder sections not shown.

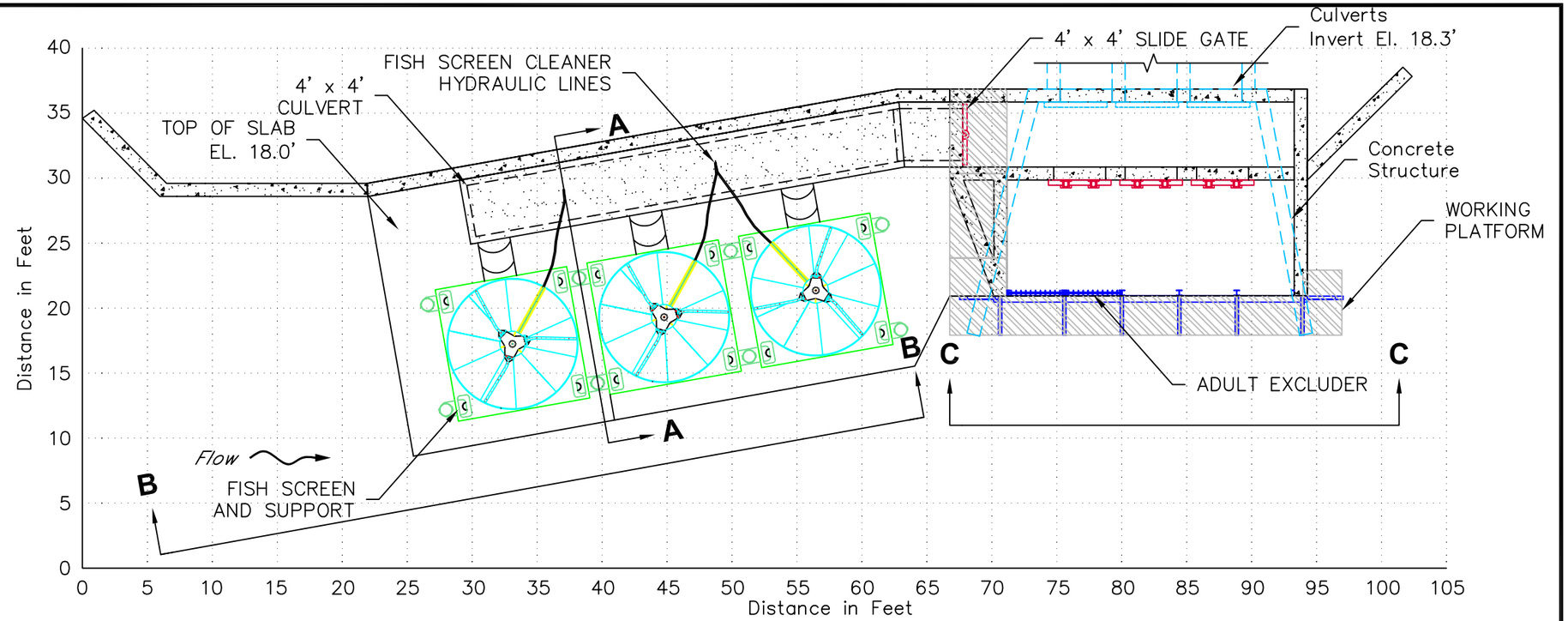

Plan

Scale: 1" = 10'

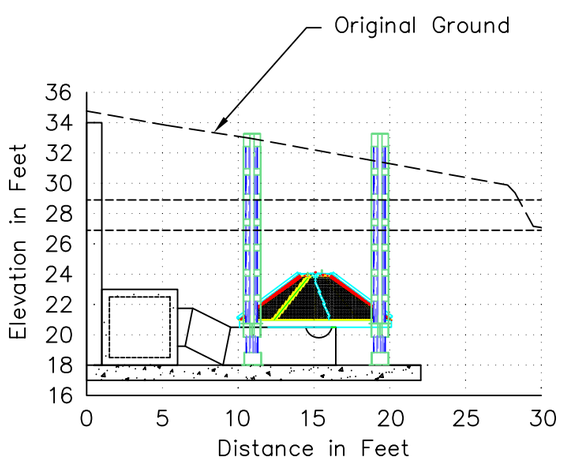

Section A - A

Scale: 1" = 10'

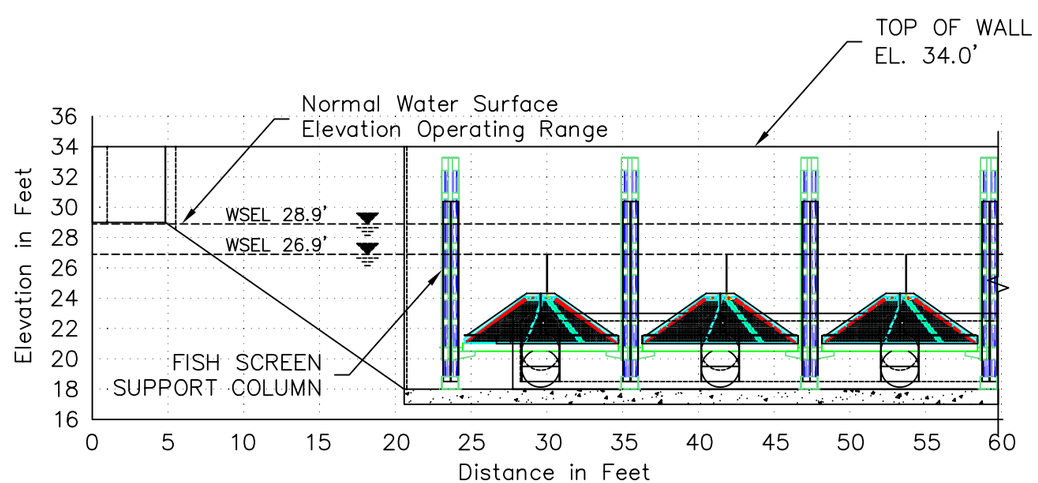

Section B - B

Scale: 1" = 10'

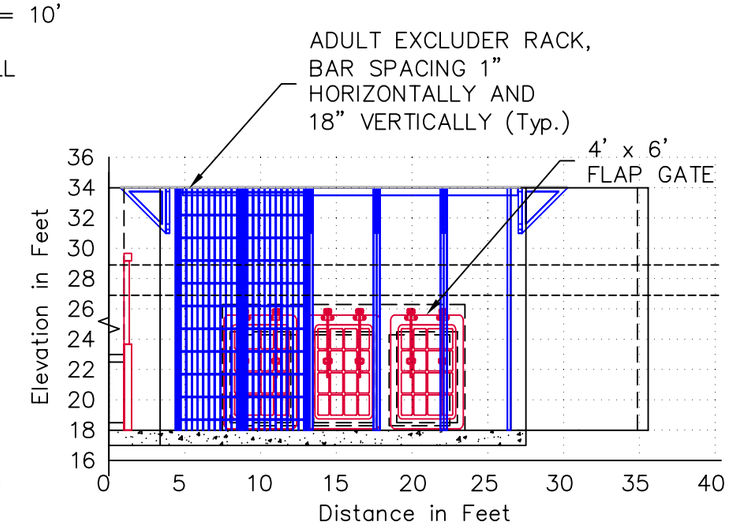

Section C - C

Scale: 1" = 10'

PUMPING PLANT NO. 1 Sutter Bypass near Yuba City, California	Conical Fish Screen Plan and Sections	STATE OF CALIFORNIA THE RESOURCES AGENCY DEPARTMENT OF WATER RESOURCES NORTHERN DISTRICT Revision Date: March 12, 2002	Drawing: Cone_Plan _and_Elevation Sheet 7 of 30

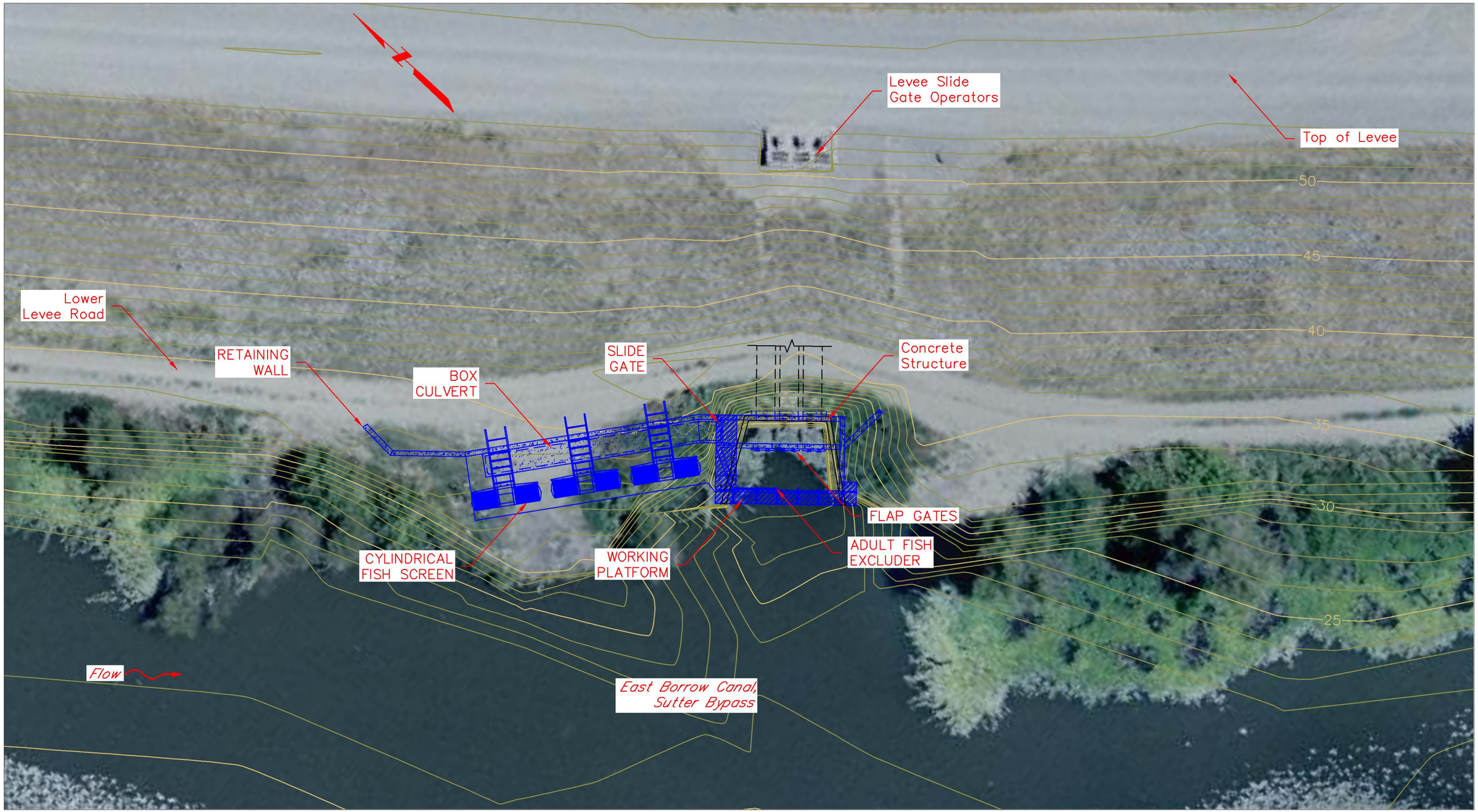

Notes:
1) Aerial photograph taken June 30, 2000.
2) Vertical datum NAVD 88, feet.
3) Contour interval = 1 foot.

0 20 40
Scale in Feet

PUMPING PLANT NO. 1 Sutter Bypass near Yuba City, California	Cylindrical Fish Screen Site Plan	STATE OF CALIFORNIA THE RESOURCES AGENCY DEPARTMENT OF WATER RESOURCES NORTHERN DISTRICT	Drawing: PP1_topo
		Revision Date: March 21, 2002	Sheet 8 of 30

Notes:
1) Vertical datum NAVD 88, feet.
2) Survey performed July 2000.
3) See Sheet 10 for fish screen details.
4) Footings/sheet-pile cutoff walls not shown.
5) 3 adult excluder sections not shown.

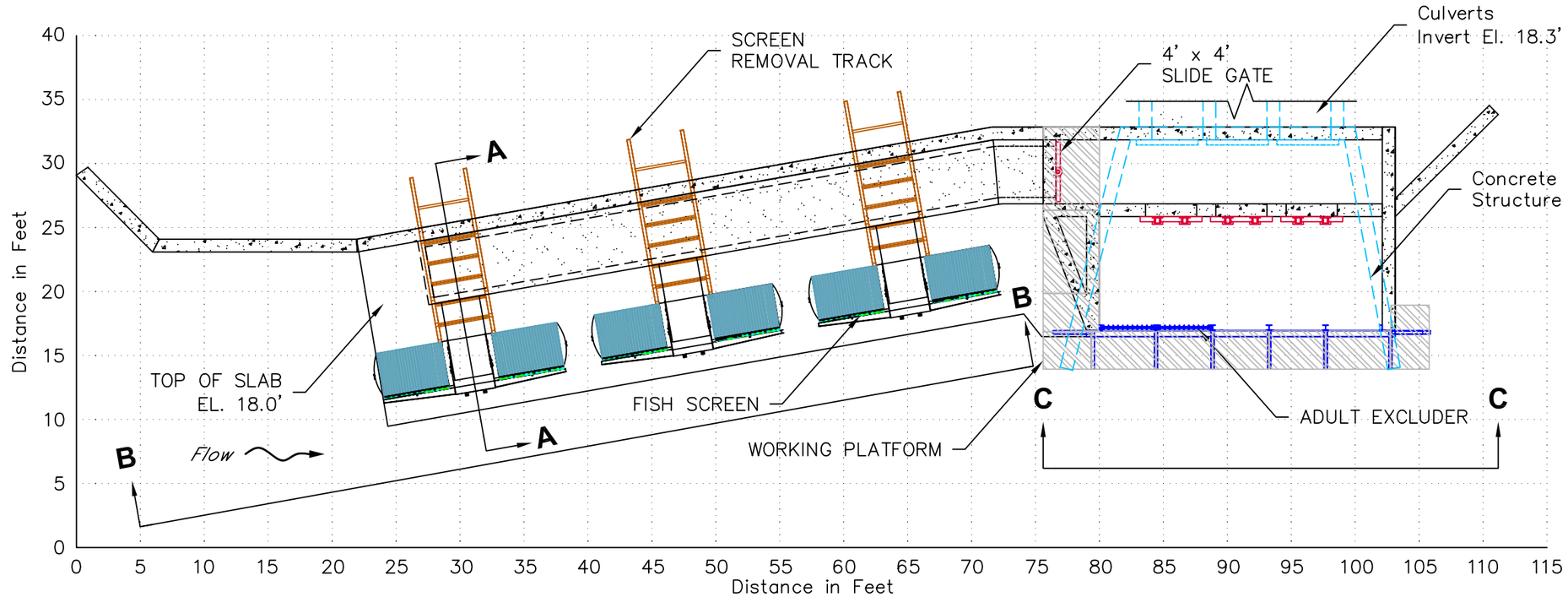

Plan

Scale: 1" = 10'

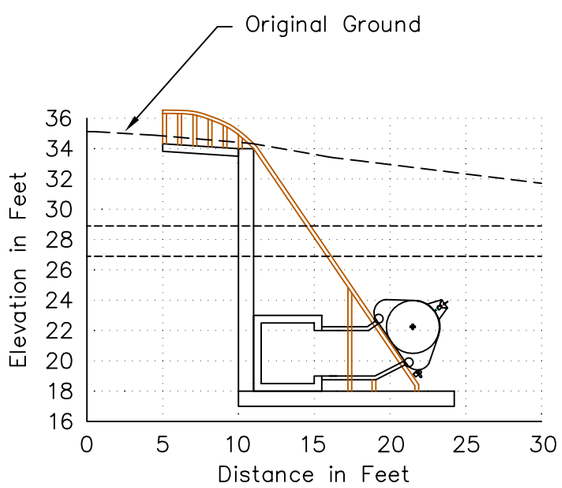

Section A - A

Scale: 1" = 10'

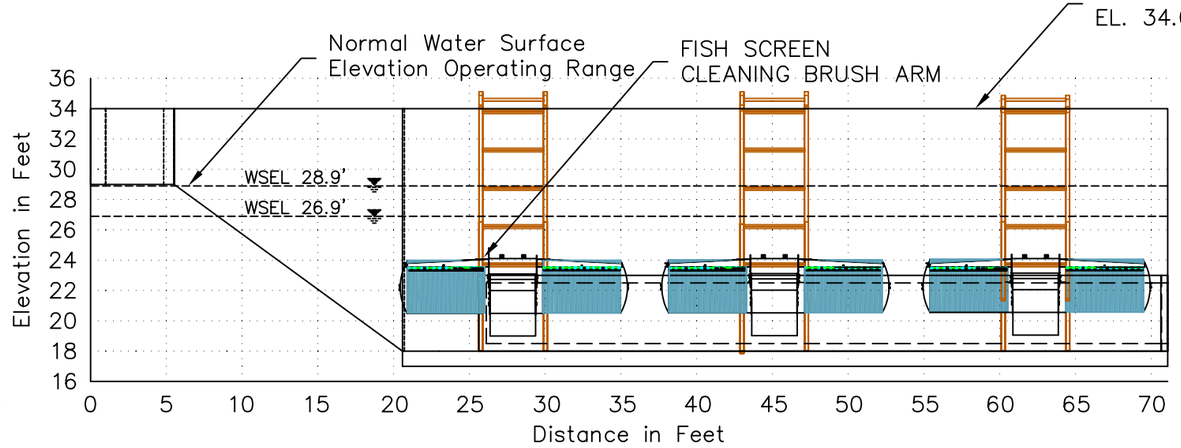

Section B - B

Scale: 1" = 10'

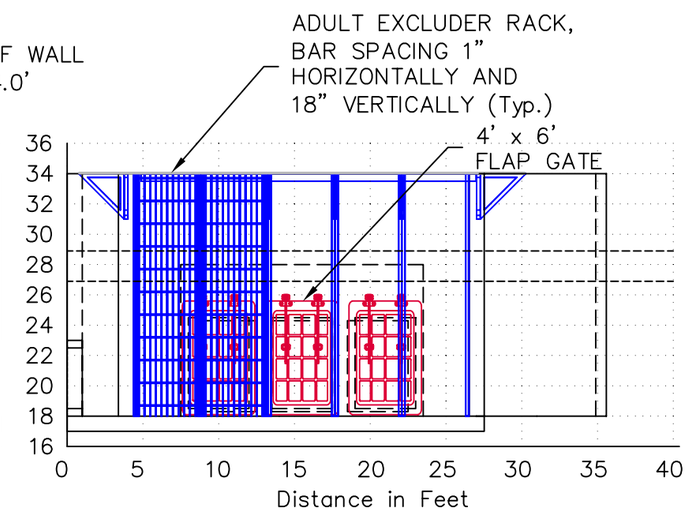

Section C - C

Scale: 1" = 10'

PUMPING PLANT NO. 1 Sutter Bypass near Yuba City, California	Cylindrical Fish Screen Plan and Sections	STATE OF CALIFORNIA THE RESOURCES AGENCY DEPARTMENT OF WATER RESOURCES NORTHERN DISTRICT	Drawing: cylindrical_plan_and_elevation_b
		Revision Date: March 19, 2002	Sheet 9 of 30

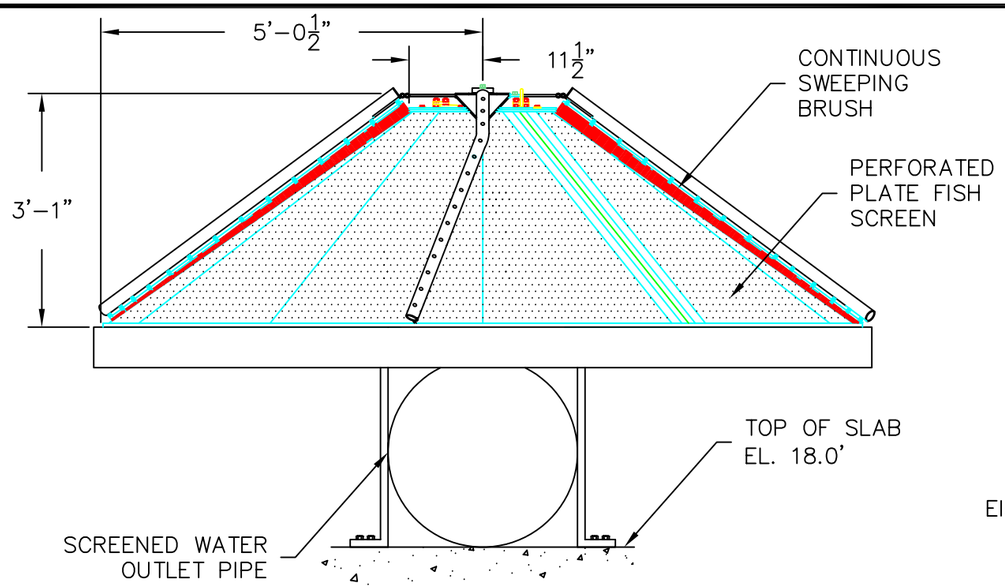

Conical Fish Screen Detail

Scale: 1/2" = 1'

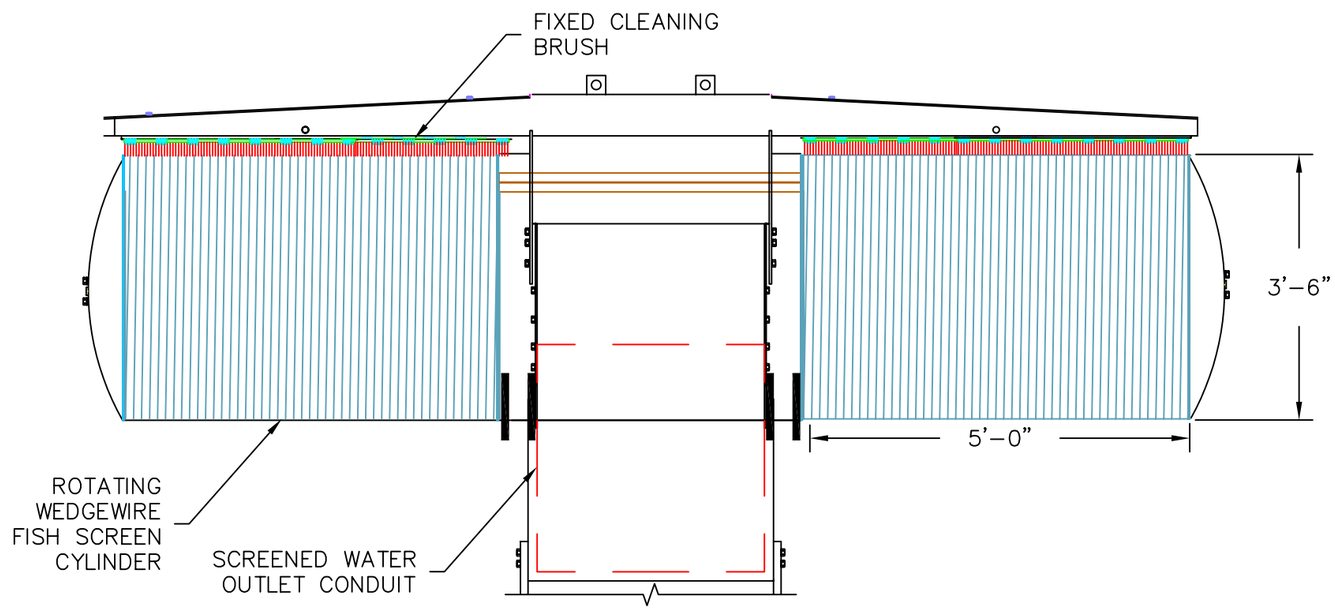

Cylindrical Fish Screen Detail

Scale: 1/2" = 1'

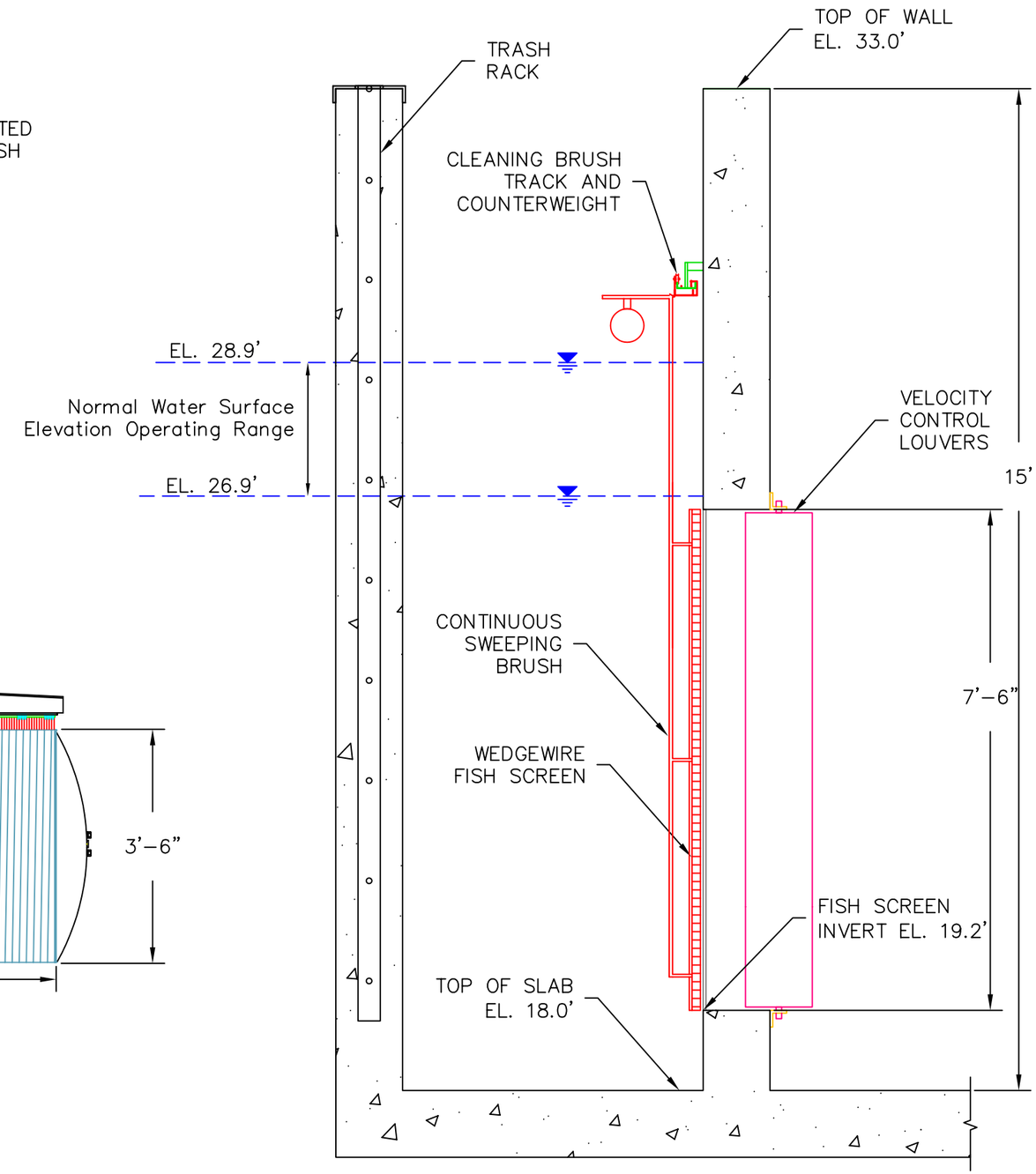

Flat Plate Fish Screen Detail

Scale: 1/2" = 1'

PUMPING PLANT NO. 1 Sutter Bypass near Yuba City, California	Fish Screen Details	STATE OF CALIFORNIA THE RESOURCES AGENCY DEPARTMENT OF WATER RESOURCES NORTHERN DISTRICT Revision Date: March 19, 2002	Drawing: Screen_Details Sheet 10 of 30

Pumping Plant No. 2

Introduction

Project Location

Pumping Plant No. 2 is located in Sutter County along the EBC of the Sutter Bypass near Yuba City, California (see Figure 1). The structure is about 10 miles southwest of Yuba City, just north of the intersection of O'Banion Road and the Sutter Bypass east levee road. The proposed project location is identified on the USGS, Gilsizer Slough Quadrangle, 7.5-minute series, as "Pumping Sta." An aerial photo of the project site is shown below (Figure 8).

Figure 8. Aerial photograph of Pumping Plant No. 2.

Project Description

The proposed Pumping Plant No. 2 fish screening project consists of modifying the existing facility, which is owned and operated by DWR. Modifications, which include construction of a fish screen and an adult fish exclusion barrier, are designed to prevent losses of fish to the drainage canals. The fish screen will prevent juvenile salmonids and steelhead trout from being drawn into the canals when water is being diverted for agricultural purposes. The adult exclusion barrier will prevent adult salmon and steelhead trout from migrating into the drainage canals when attraction flows are caused by drain water entering the EBC through the culverts.

The Pumping Plant No. 2 project area consists of two interrelated facilities, the old pumping plant and the new pumping plant. The older pump facility (Figure 9), constructed in the 1930s, could be used as either a gravity flow or pumping facility. Gravity flow, in both directions, between the EBC and the agricultural lands to the east would be allowed through the pumps and culverts during certain portions of the year. If the water level in the drainage canals needed to be lowered, and the water level in the EBC was high enough to prevent gravity flow, then the pumps would be used to drain the canals. In the 1980s a new pumping facility was constructed upstream, and the pumps were removed from the older facility. The older facility is now used exclusively for gravity flow into and out of the EBC.

Figure 9. Photograph of old Pumping Plant No. 2 (looking toward the EBC).

The new pumping facility (Figure 10) serves exclusively to pump water out of the agricultural area and into the Sutter Bypass. The pump outlet, consisting of six 54-inch diameter discharge pipes with flap gates, is located approximately 200 feet upstream of the outlet of the older facility. The invert of the outlets are about 3.5 feet higher than the normal north sump WSEL, thus the new facility does not have the capability to allow gravity flow into the EBC.

Figure 10. Photograph of new Pumping Plant No. 2 (looking toward the EBC).

This project focuses on modifications of the older pumping plant's gravity flow system. In the EBC, this system begins with four 6-foot wide by 7-foot tall culvert outlets and one 4-foot wide by 7-foot tall culvert outlet, each equipped with a wooden flap gate. The flap gates are operational, and in the present configuration, a metal support makes it possible for one of the gates to be held in the open position to allow water to flow by gravity from the EBC into the drainage canals east of the levee (Figure 11). These culverts extend approximately halfway through the levee to the location of the levee slide gates. These slide gates are used to control the flow of water through the culverts and help to maintain pool elevations inside and outside the levee. Two of the levee gates are not operational because the gates have been placed in the closed position and the gate operators have been removed. The culverts continue through the levee and terminate in the sumps below the old pump house.

Old, incomplete War Department engineering plans indicate that the size and shape of the culverts may change before reaching the pump house. Prior to final design, these culverts will need to be dewatered, inspected, and any restrictions should be removed. The sumps are connected to the South Drain by four 5-foot diameter culverts, each equipped with a vertical sliding gate.

Figure 11. Photograph of headwall structure and flap gates (looking upstream in the EBC).

Typically, drain water is flowing toward the EBC, and the WSEL in the drainage canals is higher than the WSEL in the Sutter Bypass. Thus, water is usually flowing from both the north drain and the south drain, through the old pumping plant, and out into the Sutter Bypass through the flap gates (Sheet 12)

During periods of high runoff, when the Sutter Bypass WSEL is higher than the allowable WSELs in the canals, the flap gates and levee gates are closed and the new pumping plant pumps water out of the drainage canals and into the EBC.

Occasionally, when the water level is higher in the EBC than in the old pumping plant sump, water is allowed to flow out of the EBC and into the agricultural canals where it can be pumped into the rice fields for irrigation or rice decomposition purposes. When water flows out of the EBC, it is supplied to the south canal only because the weir separating the north and south sumps at the new pumping plant creates a 2- to 3-foot head differential, preventing water from flowing to the north drain. There is a "cross-over" pipe connecting the north and south drains, but this gate is presently closed and the operator has been removed.

After project completion, when water is flowing out of the fields and into the EBC, the adult fish exclusion barrier will prevent adult upstream migrants from exiting the EBC. When water is flowing out of the EBC and into the fields, the new flap gates will close and water will flow through the fish screen, preventing juvenile fish from being drawn out of the EBC.

Hydrology

The culverts constructed as part of the old Pumping Plant No. 2 facility are used to control drainage from a 84.5 square mile area. One of the existing 6 x 7-foot flap gates on the end of the culvert in the EBC can be hoisted open during the irrigation season to facilitate unrestricted gravity flow in both directions. Normally during irrigation season, water elevation adjustments are made at the Willow Slough Headgate Structure. A telemetered stage sensor is used to monitor WSELs in the south sump of new Pumping Plant No. 2.

According to a draft operations manual, DWR's Sutter Maintenance Yard staff maintains WSELs in the EBC, at the location of old Pumping Plant No. 2, between a low of 27.8 feet and a high of 29.8 feet (NAVD 88). The maximum elevation in the south drain before pumping commences at the new pumping plant is 29.8 feet. Because Sutter Maintenance Yard staff try to maintain the WSEL of the EBC within a specific range over a variety of flows, a site specific stage-discharge relationship does not exist.

Most high water at this structure will occur during winter months as a result of rain runoff. When it becomes necessary to lower the WSELs at the old pumping plant, the gates at the Willow Slough Headgate Structure are opened. When all adjustments at Willow Slough have been made, and high water still exists in the EBC (WSEL greater than 29.8 feet), then both the flap gates and the levee gates are closed. The new Pumping Plant No. 2 is then used to pump excess water from the drainage canals into the EBC.

If the water is flowing from the drainage canals to the EBC, and low water exists in the EBC (WSEL less than 27.8 feet), then the levee slide gates can be closed, or partially closed, to maintain head outside the levee. Closing the gates at Willow Slough will help raise the WSEL in the EBC.

Stage records for both the EBC and drainage canals from water year 1990 through 1996 were analyzed and a frequency curve was created (Appendix B). The stage differential versus time was plotted to estimate flow patterns. Based on 1,434 stage records over seven water years, recorded head differentials indicate that water flowed from the EBC into the drainage canal approximately 1% of the time. A zero stage differential was recorded approximately 2% of the time, indicating there was no flow through the levee culverts. However, since the stage records were recorded to 0.05 foot accuracy, a recorded head differential of zero could have actually been a head differential of up to 0.1 foot. Therefore, it is possible that up to 33 cfs (based on the orifice equation with $C_d = 0.6$) could have been flowing into or out of the EBC through the one culvert with a flap gate that can be suspended in the open position. Water flowing into the EBC occurred approximately 48% of the time. The data indicates that the levee gates were closed the remaining 49% of the time, resulting in no flow through the culverts.

During the period of record when water is flowing from the EBC into the drainage canals, the maximum observed head differential was 1.1 feet. Using the orifice equation (C_d =0.6), this equates to a flow of approximately 110 cfs. This calculation was based on old War Department engineering drawings for a proposed pumping plant facility, and could not be verified without completely dewatering the site. Using the average observed head differential of 0.5 feet, the flow is approximately 74 cfs.

The maximum observed head differential was 4.4 feet, when the flow was from the drainage canals into the EBC and the three operational levee gates were in the fully open position. This equates to a flow of approximately 660 cfs. Using the average observed head differential of 0.96 feet, the flow is approximately 103 cfs.

Adult Fish Exclusion Barriers

Sizing and Configuration

The purpose of the adult fish exclusion barrier is to prevent adult Chinook salmon and steelhead trout from leaving the Lower Butte Creek stream system. According to the USFWS manual *Fish Passageways and Bypass Facilities*, the maximum recommended spacing between vertical bars is 1.5 inches for Chinook salmon and 1 inch for steelhead trout. Because steelhead trout are present in the Sutter Bypass, 1-inch bar spacing will be used.

In determining the size of the exclusion barrier, the amount of submerged open area in the bar rack and the head loss through the bar rack were considered. It was decided that the bar rack assembly should have at least as much open area as the total area of the existing culverts, and the maximum allowable head loss should not exceed 0.1 feet. Using these design parameters, the three types of bars considered were round steel or aluminum bars, rectangular steel or aluminum bars, and rectangular polyethylene bars with rounded leading and trailing edges. The polyethylene bars should provide the best combination of hydraulic performance, durability, and resistance to corrosion. These bars are comparable in cost to coated steel bars, weigh approximately 70 percent less, and inhibit aquatic plant growth.

Using a bar width of 0.5 inches with 1-inch clear space between bars, and a minimum probable water depth of 8.8 feet, nine 4-foot wide bays are required to exceed the minimum desirable open area. The maximum probable velocity through the bar racks was calculated assuming a 1-foot head differential between the drainage canals and the EBC and that all five levee gates would be open. With a calculated flow of 944 cfs through the culverts and a corresponding approach velocity of 3 fps, the head loss will be approximately 0.1 feet.

To allow for variations in the water depth in the EBC and to provide a minimum of 3 feet of freeboard, the excluder racks will be 16.4 feet tall (2 stacked 8.2-foot sections). Each 4.33-foot wide rack will slide vertically down in a track formed by wide flange steel beams. A backhoe, boom truck, or other piece of equipment could be used to remove the racks for maintenance or repair. At about 7.4 pounds per square foot, each section would weigh approximately 263 pounds.

Operation and Maintenance

Operation and maintenance activities, to be performed by DWR personnel, will consist of periodic inspection and raking to prevent clogging. Except during floodflows, the debris load should be minimal because the water flowing through the racks will come from the drainage canals, not from the Sutter Bypass. When the stage is higher in the EBC than in the drainage canals, the flap gates will close, and there will be no flow through the adult exclusion barrier. The racks will rest within a track system to facilitate easy removal for inspection, major maintenance, or repairs.

Flat Plate Fish Screen Alternative

Sizing and Configuration

The flat plate fish screen design and required surface area of the screen were determined using the DFG Fish Screening criteria for steelhead trout and NOAA Fisheries Fish Screening criteria for anadromous salmonids (Appendix D). With a maximum allowable approach velocity of 0.33 fps for continually cleaned screens in streams and rivers, and a maximum diversion of 44.6 cfs, the required wetted screen area is 135 square feet. Adding 25 percent (34 square feet) to the required wetted area to compensate for reduction of screen area due to structural members, the required screen area becomes 169 square feet. Observed sweeping velocities at the location of the proposed fish screen range from 0 fps during low flow to approximately 0.5 fps during high flow. Because of low channel slope and slow water velocity, the sweeping velocity criteria may not be met during certain flow conditions, depending on the amount of water being diverted.

Sheet 15 shows the plan and elevation view of the fish screen layout. The flat plate fish screen will have a continuous cleaning type apparatus, which uses a sweeping brush controlled by a hydraulic motor located on the fish screen structure. The equipment used to power the hydraulic motor will be located where it will not be inundated by high flows in the Sutter Bypass. The screen face will consist of removable wedgewire panels set perpendicular to the reinforced concrete slab. The screen consists of eleven 4-foot square panels with a total area of 176 square feet. The square panels will allow the wedgewire to be oriented horizontally or vertically. Louvers will be installed behind the screen to provide velocity control and ensure an even flow distribution through the screen face. The concrete floor in front of the screen will be recessed 3 feet, in part to prevent sediment from interfering with fish screen operation (Sheet 20).

The Willow Slough Headgate Structure controls the WSEL in the EBC at the location of the proposed fish screen. The operating WSEL is maintained between 27.8 feet and 29.8 feet. The invert elevation for the proposed fish screen is set at 23.5 feet so that the fish screen will be completely submerged by about 4 inches at the low WSEL. This will help ensure that the maximum allowable approach velocity will not be exceeded if the full diversion is being drawn while the WSEL in the EBC is at its minimum. The fish screen structure walls are 15.1 feet tall, leaving 5.6 feet of freeboard during high operating WSELs.

Trashracks will be built with 4-inch wide openings between vertical members and 18-inch clearance between horizontal members. The trashracks will be constructed 4 feet in front of the fish screen to protect the screen face from potential damage from large floating debris, and to allow personnel access for maintenance activities. Each trashrack bay will be 4-feet wide and 12-feet tall and will contain two trashrack sections 4.3-feet wide and 6-feet tall, stacked one on top of another.

Three 5-foot wide by 3-foot tall, automated slide gates, shown on Sheet 15, will be installed to control flow from the EBC into the drainage canals. The gates were sized so that no parts are extruding above the wall, and so that there is more open area in the gates than in the culvert. With the gate area greater than the culvert area, the higher water velocity should prevent waterborne material from settling out within the culvert.

Four 6 x 7-foot and one 4 x 7-foot flap gates, shown on Sheet 15, will be installed to allow flow from the drainage canals into the EBC and prevent flow from returning when the WSELs are higher in the EBC than in the drainage canals. In order to ensure the flow through the culverts is not restricted, the proposed flap gates are the same size as the existing gates. An adult fish exclusion barrier, as described previously, will be installed in front of the flap gates to prevent adult salmon and steelhead trout from entering and getting trapped in the drainage canals.

Stage sensors will be installed on the upstream and downstream side of the slide gates to ensure fish screen approach velocity criteria are met. The primary function of these sensors is to monitor the flow through the gates as a function of the head differential across the gates. These sensors may serve to actuate controls to throttle the gates for flow control, send an alarm, or shut down the diversion if an undesirable condition is sensed. A flow direction sensor will be installed in the diversion culvert to detect which direction the water is flowing. This sensor will trigger an action to close the slide gates, thus preventing backflow through the fish screen when water is entering the EBC through the culverts and flap gates.

Steel grating will be used to cover the entire screen bay to help ensure the safety of personnel working on or around the structure and to help prevent large debris from entering the screen bay when the stage in the EBC is high. The grating will also be used as a walkway and working platform to access the trashracks and adult exclusion barrier for maintenance activities.

Operation and Maintenance

Access to the site for normal operation and maintenance will be via the existing lower levee road that leads to the proposed fish screen structure, as shown on sheets 12 and 14. An access bridge will be constructed across the fish screen bay, as shown on Sheet 15, for equipment used during maintenance activities.

Sutter Maintenance Yard staff will operate and maintain the fish screen structure. Operational requirements will include daily checks to ensure that the screen cleaning equipment is functioning properly. Maintenance responsibilities include periodically repairing or replacing the brush cleaning system components, occasionally cleaning sediment from the screen bay, checking operation of gates and culverts, and clearing obstructions and debris. Most floating debris will be deflected by or captured on trashracks that will require periodic manual cleaning.

If a maintenance problem occurs that requires the screen to be removed from service, the structure can be dewatered while repairs are made. Included in this design are bulkheads that can be installed in the trashrack bays. With the bulkheads installed and the slide gates closed, the water can be pumped out of the screen bay. If necessary, a boom truck or other equipment can be used to remove fish screen panels or components.

An additional operational requirement will be to maintain stage sensors upstream and downstream of the slide gate, and the flow direction sensor in the culvert. Sutter Maintenance Yard staff will need to ensure that the sensors continue to operate under design parameters.

Conical Fish Screen Alternative

Sizing and Configuration

The conical fish screen design and required surface area of the screen are controlled by the DFG Fish Screening criteria for steelhead trout, and NOAA Fisheries Fish Screening criteria for anadromous salmonids. With a maximum allowable approach velocity of 0.33 fps for continually cleaned screens in streams and rivers, cone screen manufacturers specifications state that 121-inch base diameter by 37-inch tall cone screens have a capacity of 33 cfs (Sheet 20). Observed sweeping velocities at the location of the proposed fish screen range from 0 fps during low flow to approximately 0.5 fps during high flow. Because of low channel slope and slow water velocity, the sweeping velocity criteria may not be met during certain flow conditions, depending on the amount of water being diverted.

Sheet 17 shows the plan and sections view of the conical fish screen layout. Because each screen has a capacity of 33 cfs, and the potential diversion amount is 44.6 cfs, two cone screens are required. Each conical fish screen will have a continuous cleaning type apparatus with a rotating sweeping brush controlled by a hydraulic motor located inside the fish screen. The equipment used to power the hydraulic motor will be located where it will not be inundated by high flows in the Sutter Bypass.

The screen face will consist of a perforated plate material set in a cone-shaped frame, supported by columns, and will rest on the reinforced concrete slab. Adjustable louvers will be installed inside the screens to provide velocity control and ensure an even flow distribution through the screen. The louvers are adjusted by turning a rod that extends through the screen face. The base of the fish screen will be raised above the concrete floor to prevent sediment from interfering with fish screen operation. Six columns will be anchored to the floor to support the fish screens and to aid in screen removal and installation.

The Willow Slough Headgate Structure controls the WSEL in the EBC at the location of the proposed fish screen. The operating WSEL is maintained between 27.8 feet and 29.8 feet. The invert elevation for the proposed fish screen is set at 23.3 feet so that the top of the fish screen will be submerged approximately 1.5 feet at the low WSEL condition. This will help ensure that the maximum allowable approach velocity will not be exceeded if the full diversion is being drawn while the WSEL in the EBC is at its minimum operating level.

Screened water will pass through a short section of 30-inch diameter pipe, and then into a 3.5-foot square concrete box culvert. At the end of the culvert there is one 3.5-foot square slide gate, shown on Sheet 17, which will be installed to control flow from the EBC into the drainage canals.

Four 6 x 7-foot and one 4 x 7-foot flap gates, shown on Sheet 17, will be installed to allow flow from the drainage canals into the EBC and, in combination with the new slide gate, prevent flow out of the EBC, except through the new fish screen. To ensure the flow through the culverts is not restricted, the proposed flap gates are the same size as the existing gates. An adult fish exclusion barrier, as described previously, will be installed in front of the flap gates to prevent adult salmon and steelhead trout from entering and getting trapped in the drainage canals.

Stage sensors will be installed on the upstream and downstream side of the slide gate to ensure fish screen approach velocity criteria are met. The primary function of these sensors is to monitor the flow through the gates as a function of the head differential across the gates. These sensors may serve to actuate controls to throttle the gates for flow control, send an alarm, or shut down the diversion if an undesirable condition is sensed. A flow direction sensor will be installed in the diversion culvert to detect which direction the water is flowing. This sensor will trigger an action to close the vertical slide gate, thus preventing backflow through the fish screen when flow is entering the EBC through the culverts and flap gates.

Operation and Maintenance

Access to the site for normal operation and maintenance will be via the existing lower levee road that leads to the proposed fish screen structure, as shown on sheets 12 and 16.

Sutter Maintenance Yard staff will operate and maintain the fish screen structure. Operational requirements will include daily checks to ensure that the screen cleaning equipment is functioning properly. Maintenance responsibilities include periodically repairing or replacing the brush cleaning system components, occasionally cleaning sediment from around the screens, checking the operation of gates and culverts, and clearing obstructions and debris. Most floating debris should pass over the top of the fish screens, but some debris may get caught on the screen support columns.

If a maintenance problem occurs that requires the screen to be removed from service, the screens can be lifted out of the EBC using a boom truck or similar equipment. If necessary, the fish screens could be dewatered in place by opening up the gates at the Willow Slough Headgate Structure.

An additional operational requirement will be to maintain stage sensors upstream and downstream of the slide gate, and the flow direction sensor in the culvert. Sutter Maintenance Yard staff will need to ensure that the sensors continue to operate under design parameters.

Cylindrical Fish Screen Alternative

Sizing and Configuration

The cylindrical fish screen design and required surface area of the screen were determined using the DFG Fish Screening criteria for steelhead trout, and NOAA Fisheries Fish Screening criteria for anadromous salmonids. With a maximum allowable approach velocity of 0.33 fps for continually cleaned screens in streams and rivers, 30-inch diameter by 5-foot long cylindrical screens were selected. Observed sweeping velocities at the location of the proposed fish screen ranges from 0 fps during low flow to approximately 0.5 fps during high flow. Because of low channel slope and slow water velocity, the sweeping velocity criteria may not be met during certain flow conditions, depending on the amount of water being diverted.

Sheet 19 shows the plan and sections view of the fish screen layout. Because each screen has a capacity of 15 cfs with a 0.3 fps approach velocity (according to the manufacturer) and the potential diversion amount is 44.6 cfs, three cylindrical screens are required. Each cylindrical fish screen will have a continuous cleaning type apparatus, which consists of a fixed brush head pressing against a rotating drum. The drum is rotated by a hydraulic motor located inside the fish screen. The equipment used to power the hydraulic motor will be located where it will not be inundated by high flows in the Sutter Bypass.

The screen face will consist of wedgewire attached to a cylindrical frame resting on a track system attached to the reinforced concrete slab. There will be three 3-foot diameter by 5-foot wide cylindrical screens (Sheet 20). The fish screen manufacturer will be responsible for ensuring that there is equal flow through each fish screen. The base of the fish screen will be raised above the concrete floor to prevent sediment from interfering with fish screen operation.

The Willow Slough Headgate Structure controls the WSEL in the EBC at the location of the proposed fish screen. The operating WSEL is maintained between 27.8 feet and 29.8 feet. The invert elevation for the proposed fish screen is set at 22.8 feet so that the top of the fish screen will be submerged by approximately 2 feet at the low WSEL condition, and to meet the manufacturer recommendation to keep at least one-half screen diameter of water above the screen at all times. This will help ensure that the maximum allowable approach velocity will not be exceeded if the full diversion is being drawn while the WSEL in the EBC is at its minimum operating level.

Screened water will pass through a short section of 3-foot square culvert, and then into a 3.5-foot square concrete box culvert. At the end of the culvert there is one 3.5-foot square slide gate, shown on Sheet 19, that will be installed to control flow from the EBC into the drainage canals.

Four 6 x 7-foot and one 4 x 7-foot flap gates, shown on Sheet 19, will be installed to allow flow from the drainage canals into the EBC and, in combination with the new

slide gate, prevent flow out of the EBC, except through the new fish screen. To ensure the flow through the culverts is not restricted, the proposed flap gates are the same size as the existing gates. An adult fish exclusion barrier, as described previously, will be installed in front of the flap gates to prevent adult salmon and steelhead trout from entering and getting trapped in the drainage canals.

Stage sensors will be installed on the upstream and downstream side of the slide gate to ensure fish screen approach velocity criteria are met. The primary function of these sensors is to monitor the flow through the gates as a function of the head differential across the gates. These sensors may serve to actuate controls to throttle the gates for flow control, send an alarm, or shut down the diversion if an undesirable condition is sensed. A flow direction sensor will be installed in the diversion culvert to detect which direction the water is flowing. This sensor will trigger an action to close the vertical slide gate, thus preventing backflow through the fish screen when flow is entering the EBC through the culverts and flap gates.

Operation and Maintenance

Access to the site for normal operation and maintenance will be via the existing lower levee road that leads to the proposed fish screen structure, as shown on sheets 12 and 18.

Sutter Maintenance Yard staff will operate and maintain the fish screen structure. Operational requirements will include daily checks to ensure that the screen cleaning equipment is functioning properly. If necessary, the fish screens can be hoisted out of the water, using a winch, for inspection. When the fish screens are lowered back down the track into the water, a sensor indicates when the screen is properly docked in place. Maintenance responsibilities include the periodic repair or replacement of the brush cleaning system components, occasional cleaning of sediment from around the screens, checking the operation of gates and culverts, and clearing obstructions and debris. Most floating debris should pass over the top of the fish screens, but some debris may get caught on the screen removal track system.

If a maintenance problem occurs that requires the screen to be removed from service, the screens can be hoisted out of the EBC using a winch and the included cable system. If necessary, the fish screens can be dewatered in place by opening up the gates at the Willow Slough Headgate Structure.

An additional operational requirement will be to maintain stage sensors upstream and downstream of the slide gate and the flow direction sensor in the culvert. Sutter Maintenance Yard staff will need to ensure that the sensors continue to operate under design parameters.

Design and Construction Summary

Site Geology and Environmental Documentation

Concurrent with the preliminary design process, the DOE Project Geology Section was investigating site geology. Results of this investigation are contained in Geology Report No. 94-00-17.

During the geologic investigation, Project Geology staff reviewed site history and gathered existing geologic data. The results from three boreholes, drilled in 1980 as part of a foundation investigation for the new pumping plant, are included in the memorandum report. Two additional holes were drilled in October 2001 at the location of the proposed fish facility structure to help define the subsurface conditions where structure foundations will be located. The information from the past and recent investigations will be used for the final design of footings and cutoff walls, and to help determine dewatering requirements. The project area will probably be dewatered using sheet-piles and pumps. Water levels at the project location can also be lowered by opening the gates at the Willow Slough Headgate Structure.

On April 30, 2001, ND environmental scientists performed an environmental site survey of the project area. The purpose of this survey was to investigate potential impacts to sensitive plants, fish and wildlife, water quality, recreation, and land use. Appendix C contains a list of environmental permits potentially required and an environmental checklist form for the proposed project. No threatened or endangered species were identified within the project area.

Construction Summary

After a design alternative is selected for each site and funding is procured, DOE will complete the final designs and specifications. The construction contract will be administered by the DOE Contract Services Branch.

Construction access is proposed from Highway 99 via O'Banion Road to the Sutter Bypass levee. The existing roads are predominantly paved, but there are short sections of gravel surfaced and unimproved roads. These roads are presently in good condition. From the levee top to the project area, there is a one-lane unimproved road section approximately 250 feet long. The access road and the potential staging area consist of property owned by the State of California, so no construction easements should be necessary. If the existing roads are damaged during the construction process, they should be repaired prior to project completion.

The limits of the construction, staging areas, and access roads should be marked and managed to prevent vehicular access outside the designated work zone. In addition to the designated staging area, a small storage area may have to be constructed to store equipment and fuel. The old pump house may also be used to store some equipment.

Temporary sheet-pile cofferdams may be built around the construction area. This area will be dewatered prior to and during construction activities. The EBC is relatively wide at the project site, so flow in the EBC will not be significantly impacted by the dewatering process.

A natural gas pipeline crosses under the levee and the EBC approximately 100 feet south of the proposed project site. The exact location of this pipe should be identified prior to beginning construction activities.

In the old pumping plant gravity flow culverts, any old connections or collars that could restrict the flow through the culverts will need to be removed. At the EBC end of the culverts, the existing flap gates and headwall will need to be removed.

Excavation will be required at the toe of the levee at the site of the existing headwall and in the area immediately upstream of the headwall where the fish screen will be located. Excavated concrete and earth will be hauled to a disposal site, which will be determined by the contractor, and will be subject to DWR approval.

The fish screen and adult exclusion barrier will then be constructed. A small building will need to be constructed near the top of the levee that will house mechanical and electrical equipment needed for the operation of the fish screen cleaning and flow monitoring mechanisms. After construction, backfilling, site finish work, and erosion control will be completed.

Table 7. Flat plate fish screen alternative preliminary cost estimate.

Pumping Plant No. 2 Flat Plate Fish Screen Alternative
Preliminary Cost Estimate for Design and Construction

ITEM	DESCRIPTION	QUANTITY	UNIT	UNIT COST	TOTAL COST
	MISCELLANEOUS				
1	Mobilization/Demobilization	1	LS	$ 75,000	$ 75,000
2	Site Work, Access & Mitigation	1	LS	$ 23,000	$ 23,000
3	Dewatering	1	LS	$ 230,000	$ 230,000
4	Remove Existing Headwall and Gates	1	LS	$ 6,000	$ 6,000
					$ 334,000
	ADULT FISH EXCLUSION BARRIER				
5	Excavation	130	CY	$ 15	$ 2,000
6	Sheet-piles	1220	SF	$ 26	$ 32,000
7	H-piles	24	EA	$ 1,000	$ 24,000
8	Concrete (Walls)	61	CY	$ 800	$ 49,000
9	Concrete (Slab)	19	CY	$ 500	$ 10,000
10	Gates & Brackets (Flap Gates)	1	LS	$ 51,000	$ 51,000
11	Fish Excluder Racks	640	SF	$ 50	$ 32,000
12	Excluder Rack Metalwork	1	LS	$ 3,240	$ 3,000
13	Working Platform	160	SF	$ 25	$ 4,000
					$ 207,000
	FISH SCREEN				
14	Excavation	780	CY	$ 15	$ 12,000
15	Sheet-piles	3200	SF	$ 26	$ 83,000
16	H-piles	32	EA	$ 1,000	$ 32,000
17	Concrete (Walls)	126	CY	$ 800	$ 101,000
18	Concrete (Slab)	47	CY	$ 500	$ 24,000
19	Concrete (Access Bridge)	9	CY	$ 800	$ 7,000
20	Gates & Brackets (Fish Screen Control)	3	EA	$ 12,600	$ 38,000
21	Wedgewire Screen and Installation	176	SF	$ 150	$ 26,000
22	Louvers and Installation	176	SF	$ 100	$ 18,000
23	Screen Cleaning System	1	LS	$ 18,000	$ 18,000
24	Electrical Control Unit (Screan Cleaner)	1	LS	$ 15,000	$ 15,000
25	Trash Racks	540	SF	$ 26	$ 14,000
26	Trash Rack Metalwork	1	LS	$ 5,500	$ 6,000
27	Grating	690	SF	$ 25	$ 17,000
28	Stage and Flow Direction Sensors	3	EA	$ 10,000	$ 30,000
29	Electrical Control Unit (Sensors and Gates)	1	LS	$ 30,000	$ 30,000
30	Control Unit Building	1	LS	$ 20,000	$ 20,000
31	Dewatering Panels	560	SF	$ 7	$ 4,000
					$ 495,000
32	**Construction Cost**				**$ 1,036,000**
33	**Contingency @ 25%**				$ 259,000
34	**Construction Cost Subtotal**				**$ 1,295,000**
35	**Engineering @ 50%**				$ 648,000
36	**Environmental @ 3%**				$ 39,000
37	**Construction Inspection @ 15%**				$ 194,000
38	**Contract Admin @ 10%**				$ 130,000
39	**Total**				**$ 2,310,000**

Table 8. Conical fish screen alternative preliminary cost estimate.

Pumping Plant No. 2 Conical Fish Screen Alternative
Preliminary Cost Estimate for Design and Construction

ITEM	DESCRIPTION	QUANTITY	UNIT	UNIT COST	TOTAL COST
	MISCELLANEOUS				
1	Mobilization/Demobilization	1	LS	$ 75,000	$ 75,000
2	Site Work, Access & Mitigation	1	LS	$ 21,000	$ 21,000
3	Dewatering	1	LS	$ 220,000	$ 220,000
4	Remove Existing Headwall and Gates	1	LS	$ 6,000	$ 6,000
					$ 322,000
	ADULT FISH EXCLUSION BARRIER				
5	Excavation	130	CY	$ 15	$ 2,000
6	Sheet-piles	1220	SF	$ 26	$ 32,000
7	H-piles	24	EA	$ 1,000	$ 24,000
8	Concrete (Walls)	61	CY	$ 800	$ 49,000
9	Concrete (Slab)	19	CY	$ 500	$ 10,000
10	Gates & Brackets (Flap Gates)	1	LS	$ 51,000	$ 51,000
11	Fish Excluder Racks	640	SF	$ 50	$ 32,000
12	Excluder Rack Metalwork	1	LS	$ 3,240	$ 3,000
13	Working Platform	235	SF	$ 25	$ 6,000
					$ 209,000
	FISH SCREEN				
14	Excavation	475	CY	$ 15	$ 7,000
15	Sheet-piles	2060	SF	$ 26	$ 54,000
16	H-piles	9		$ 1,000	$ 9,000
17	Concrete (Walls)	64	CY	$ 800	$ 51,000
18	Concrete (Slab)	32	CY	$ 500	$ 16,000
19	Gates & Brackets (Fish Screen Control)	1	LS	$ 8,500	$ 9,000
20	Conical Fish Screen	2	EA	$ 84,000	$ 168,000
21	Stage and Flow Direction Sensors	3	EA	$ 10,000	$ 30,000
22	Electrical Control Unit (Sensors and Gates)	1	LS	$ 30,000	$ 30,000
23	Control Unit Building	1	LS	$ 20,000	$ 20,000
					$ 394,000
24	**Construction Cost**				**$ 925,000**
25	**Contingency @ 25%**				$ 231,000
26	**Construction Cost Subtotal**				**$ 1,156,000**
27	**Engineering @ 50%**				$ 578,000
28	**Environmental @ 3%**				$ 35,000
29	**Construction Inspection @ 15%**				$ 173,000
30	**Contract Admin @ 10%**				$ 116,000
31	**Total**				**$ 2,060,000**

Table 9. Cylindrical fish screen alternative preliminary cost estimate.

Pumping Plant No. 2 Cylindrical Fish Screen Alternative Preliminary Cost Estimate for Design and Construction

ITEM	DESCRIPTION	QUANTITY	UNIT	UNIT COST	TOTAL COST
	MISCELLANEOUS				
1	Mobilization/Demobilization	1	LS	$ 75,000	$ 75,000
2	Site Work, Access & Mitigation	1	LS	$ 21,000	$ 21,000
3	Dewatering	1	LS	$ 220,000	$ 220,000
4	Remove Existing Headwall and Gates	1	LS	$ 6,000	$ 6,000
					$ 322,000
	ADULT FISH EXCLUSION BARRIER				
5	Excavation	130	CY	$ 15	$ 2,000
6	Sheet-piles	1220	SF	$ 26	$ 32,000
7	H-piles	24	EA	$ 1,000	$ 24,000
8	Concrete (Walls)	61	CY	$ 800	$ 49,000
9	Concrete (Slab)	19	CY	$ 500	$ 10,000
10	Gates & Brackets (Flap Gates)	1	LS	$ 51,000	$ 51,000
11	Fish Excluder Racks	640	SF	$ 50	$ 32,000
12	Excluder Rack Metalwork	1	LS	$ 3,240	$ 3,000
13	Working Platform	235	SF	$ 25	$ 6,000
					$ 209,000
	FISH SCREEN				
14	Excavation	460	CY	$ 15	$ 7,000
15	Sheet-piles	2240	SF	$ 26	$ 58,000
16	H-piles	9	EA	$ 1,000	$ 9,000
17	Concrete (Walls)	69	CY	$ 800	$ 55,000
18	Concrete (Slab)	25	CY	$ 500	$ 13,000
19	Gates & Brackets (Fish Screen Control)	1	LS	$ 8,500	$ 9,000
20	Cylindrical Fish Screen	2	EA	$ 94,000	$ 188,000
21	Stage and Flow Direction Sensors	3	EA	$ 10,000	$ 30,000
22	Electrical Control Unit (Sensors and Gates)	1	LS	$ 30,000	$ 30,000
23	Control Unit Building	1	LS	$ 20,000	$ 20,000
					$ 419,000
24	**Construction Cost**				**$ 950,000**
25	**Contingency @ 25%**				$ 238,000
26	**Construction Cost Subtotal**				**$ 1,188,000**
27	**Engineering @ 50%**				$ 594,000
28	**Environmental @ 3%**				$ 36,000
29	**Construction Inspection @ 15%**				$ 178,000
30	**Contract Admin @ 10%**				$ 119,000
31	**Total**				**$ 2,120,000**

PRELIMINARY ENGINEERING DRAWINGS FOR

LOWER BUTTE CREEK PROJECT
SUTTER BYPASS
PUMPING PLANT NO. 2
FISH SCREENING PROJECT

SUTTER COUNTY, CALIFORNIA

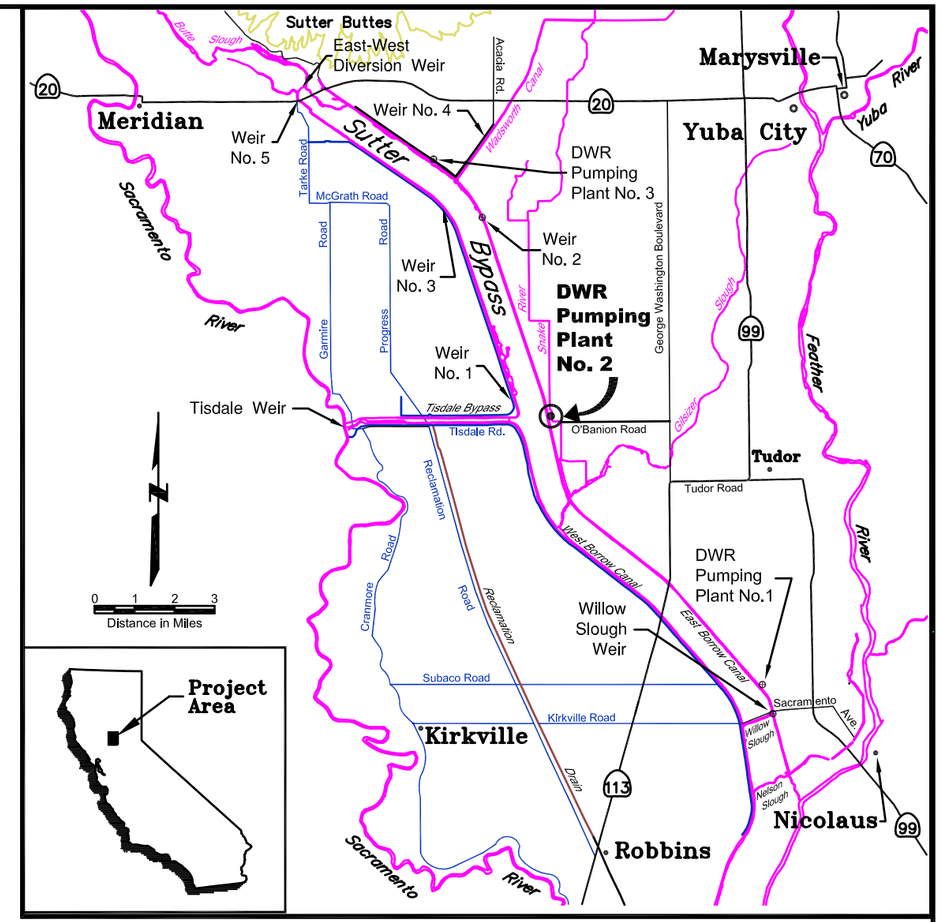

INDEX OF SHEETS

Sheet 11 of 30 – Title Sheet and Area Map
Sheet 12 of 30 – General Plan
Sheet 13 of 30 – Isometric Views
Sheet 14 of 30 – Flat Plate Fish Screen Site Plan
Sheet 15 of 30 – Flat Plate Fish Screen Plan and Elevation
Sheet 16 of 30 – Conical Fish Screen Site Plan
Sheet 17 of 30 – Conical Fish Screen Plan and Sections
Sheet 18 of 30 – Cylindrical Fish Screen Site Plan
Sheet 19 of 30 – Cylindrical Fish Screen Plan and Sections
Sheet 20 of 30 – Fish Screen Details

Note: All Proposed Work Denoted in Upper Case Text

PRELIMINARY
SUBJECT TO REVISION

PUMPING PLANT NO. 2 Sutter Bypass near Yuba City, California	Title Sheet and Area Map	STATE OF CALIFORNIA THE RESOURCES AGENCY DEPARTMENT OF WATER RESOURCES NORTHERN DISTRICT	Drawing: 3_title_and_loc_maps_1.1.dwg
		Revision Date: March 6, 2002	Sheet 11 of 30

Note:
1) Aerial photograph taken June 30, 2000

0 100 200
Scale in Feet

PUMPING PLANT NO. 2 Sutter Bypass near Yuba City, California	General Plan	STATE OF CALIFORNIA THE RESOURCES AGENCY DEPARTMENT OF WATER RESOURCES NORTHERN DISTRICT Revision Date: February 26, 2002	DRAWING: Pumping_ Plant2b.dwg Sheet 12 of 30

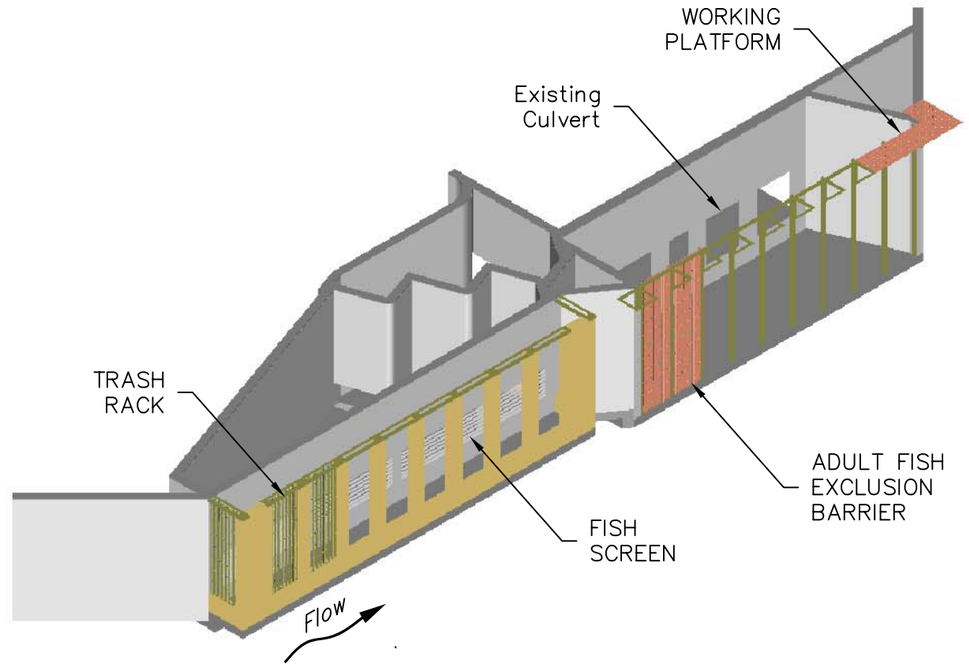

Flat Plate Fish Screen

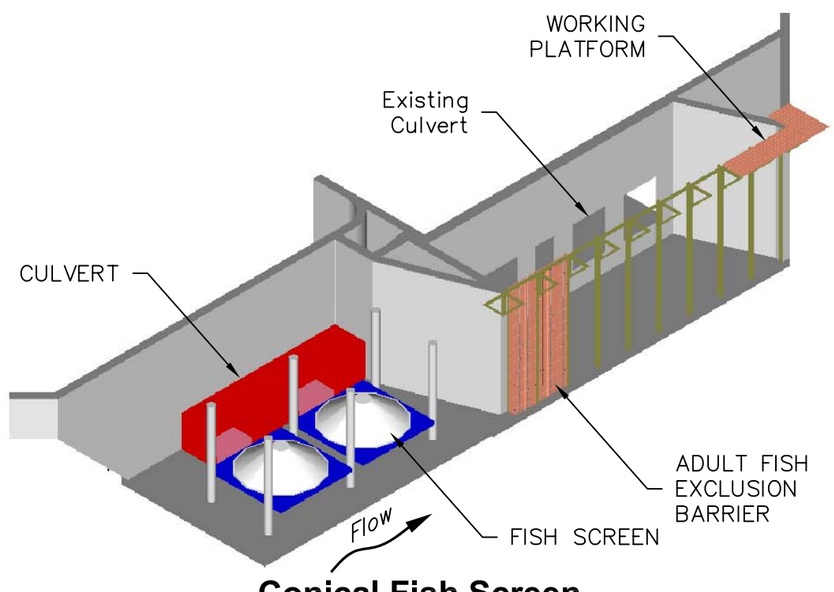

Conical Fish Screen

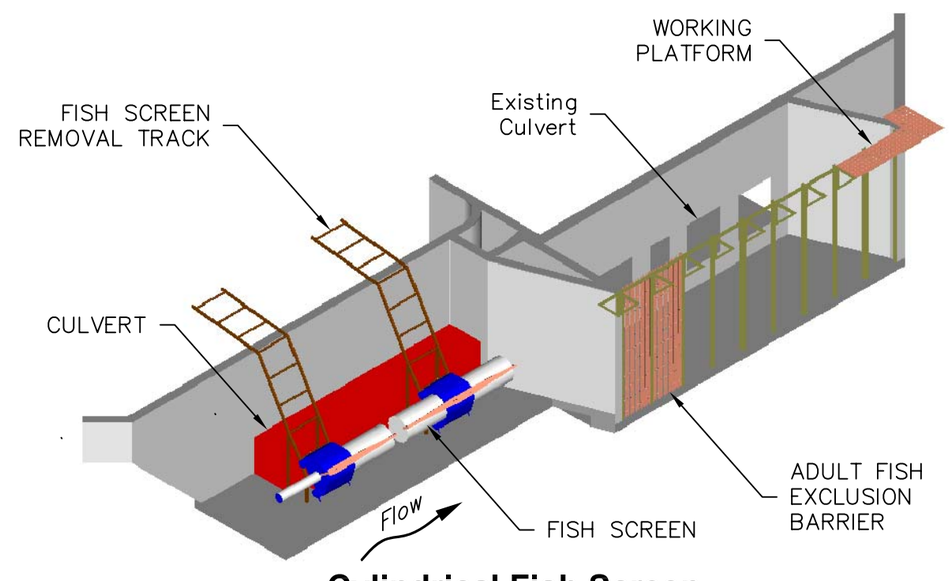

Cylindrical Fish Screen

PUMPING PLANT NO. 2 Sutter Bypass near Yuba City, California	Isometric Views	STATE OF CALIFORNIA THE RESOURCES AGENCY DEPARTMENT OF WATER RESOURCES NORTHERN DISTRICT Revision Date: February 26, 2002	Drawing: Isometric_ Views1.1.dwg Sheet 13 of 30

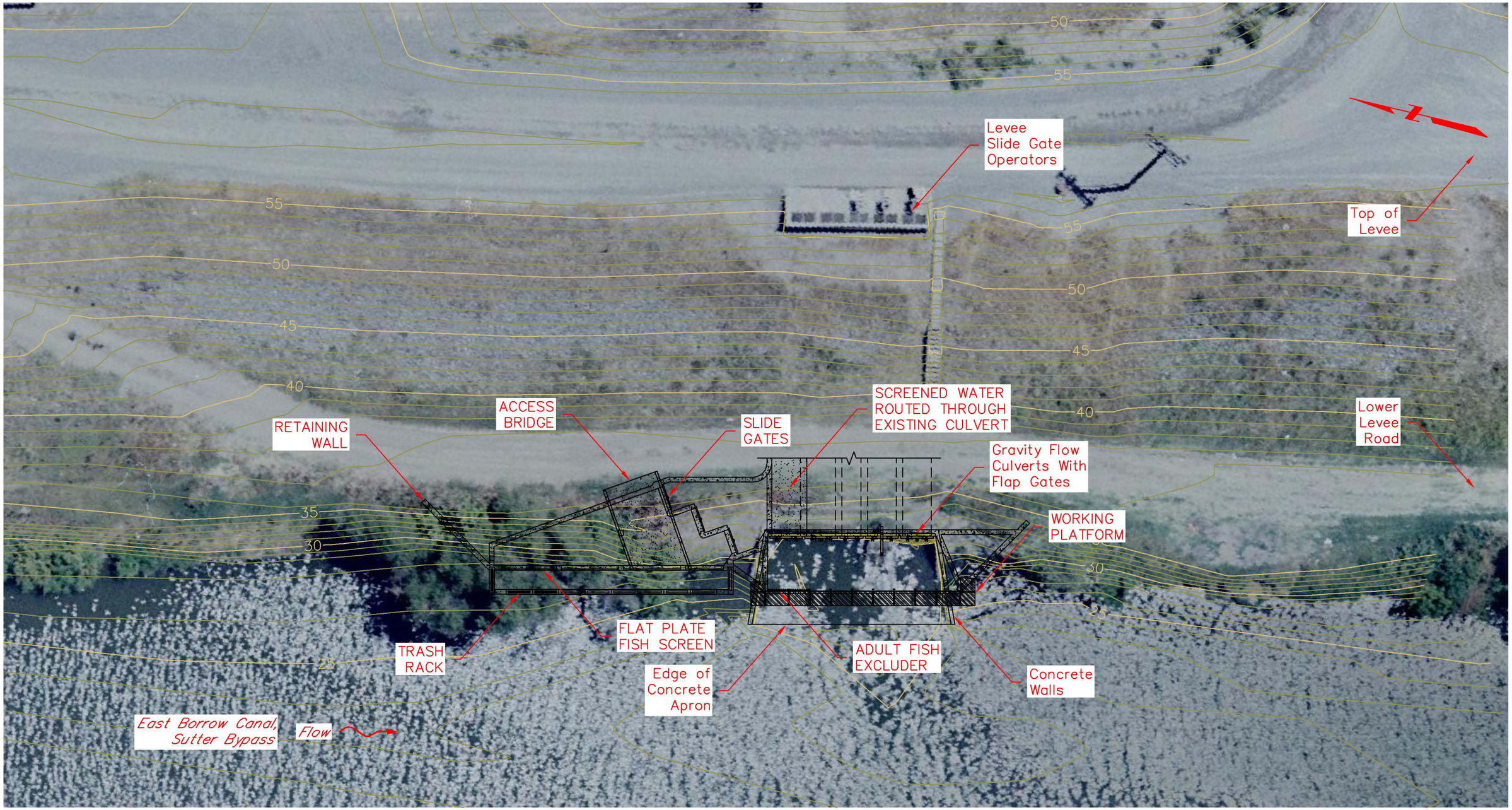

Notes:
1) Aerial photograph taken June 30, 2000.
2) Vertical datum NAVD 88, feet.
3) Contour interval = 1 foot.

0 20 40
Scale in Feet

PUMPING PLANT NO. 2 Sutter Bypass near Yuba City, California	Flat Plate Fish Screen Site Plan	STATE OF CALIFORNIA THE RESOURCES AGENCY DEPARTMENT OF WATER RESOURCES NORTHERN DISTRICT	DRAWING: Pumping_ Plant_2b.dwg
		Revision Date: March 21, 2002	Sheet 14 of 30

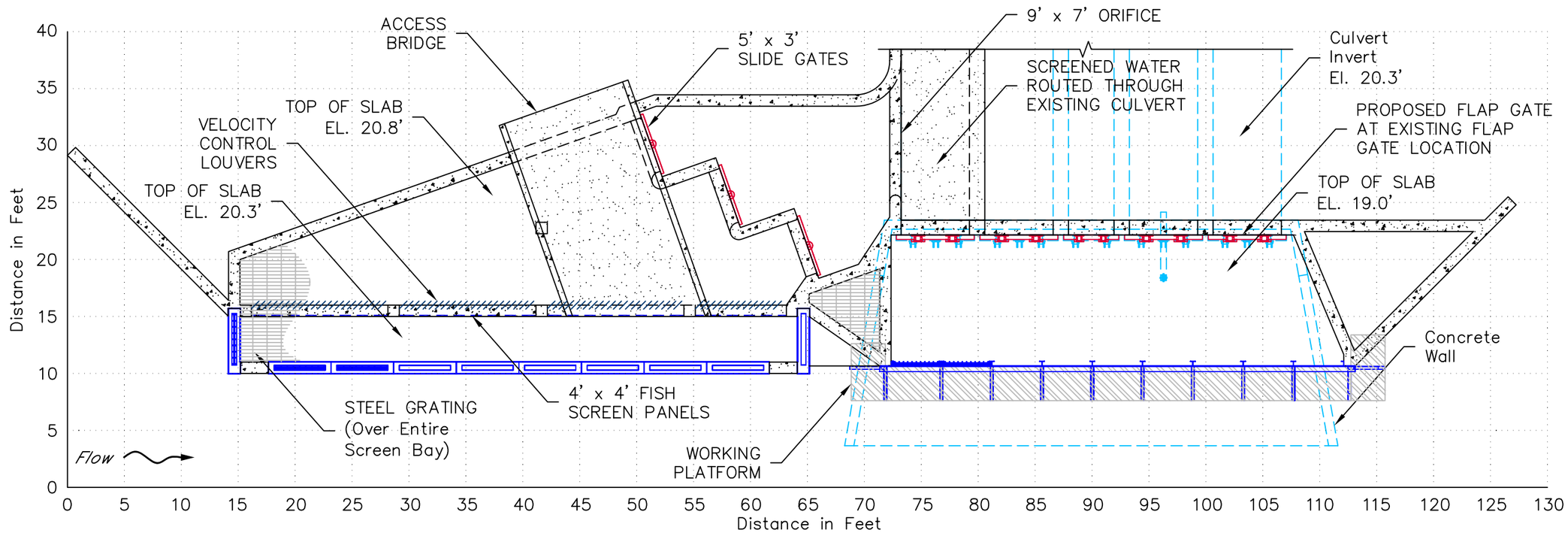

Plan

Scale: 1"=10'

Notes:
1) Vertical datum NAVD 88, feet.
2) Survey performed July 2000.
3) See Sheet 20 for fish screen detail.
4) Fish screen cleaning mechanism not shown.
5) Footings/sheet-pile cutoff walls not shown.
6) 7 adult excluder sections not shown.
7) 7 trash rack sections not shown.

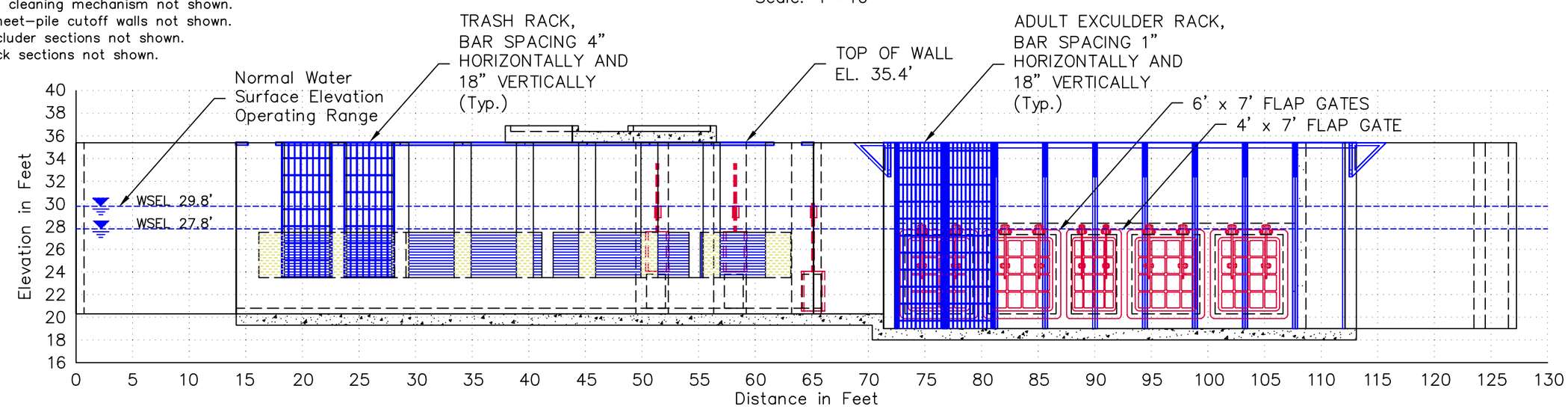

Elevation

Scale: 1"=10'

PUMPING PLANT NO. 2 Sutter Bypass near Yuba City, California	Flat Plate Fish Screen Plan and Elevation	STATE OF CALIFORNIA THE RESOURCES AGENCY DEPARTMENT OF WATER RESOURCES NORTHERN DISTRICT Revision Date: March 21, 2002	Drawing: Plate_Plan_and _Profile1.3.dwg Sheet 15 of 30

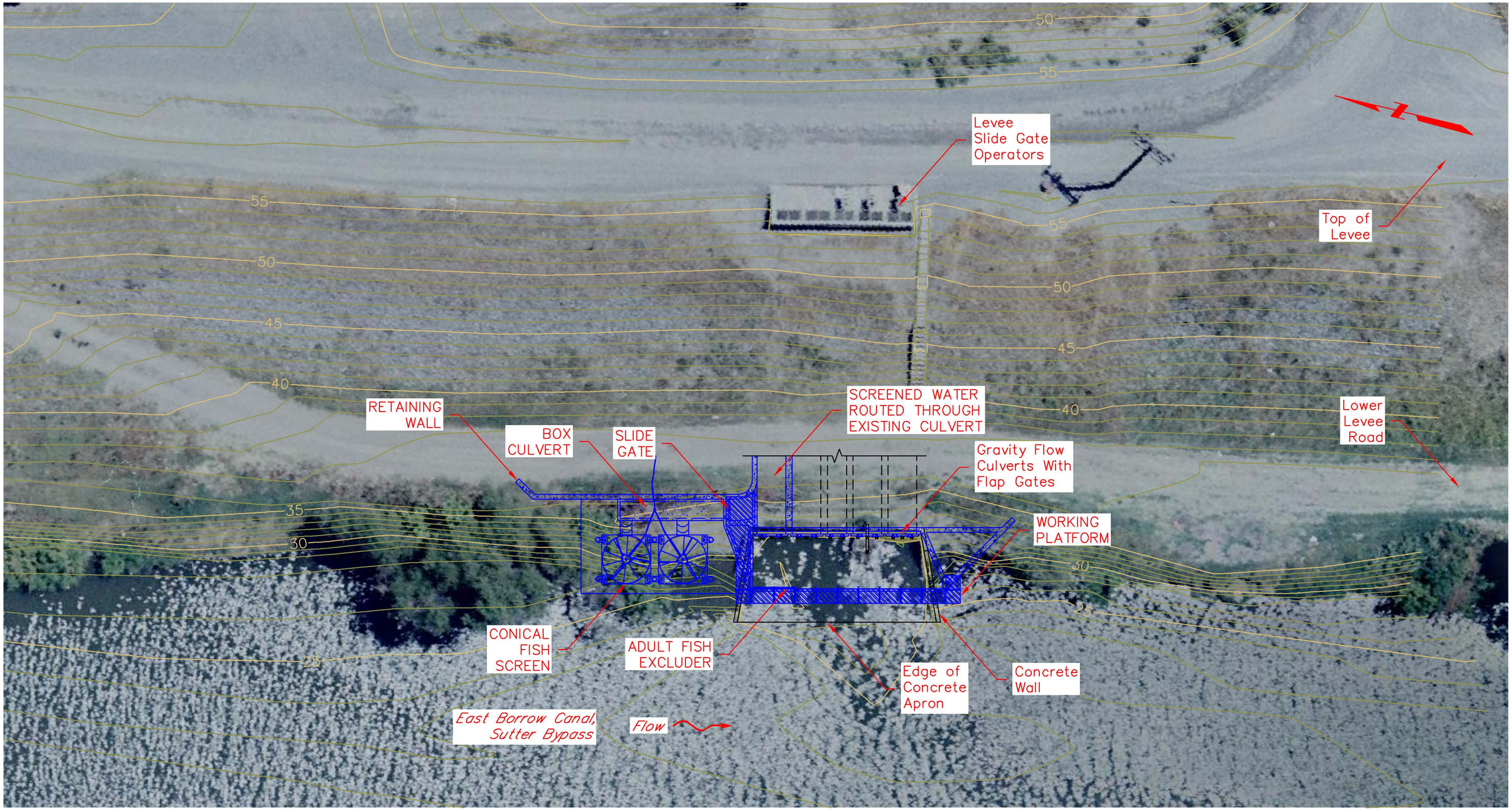

Notes:
1) Aerial photograph taken June 30, 2000.
2) Vertical Datum NAVD 88, feet.
3) Contour interval = 1 foot.

0 20 40
Scale in Feet

PUMPING PLANT NO. 2 Sutter Bypass near Yuba City, California	Conical Fish Screen Site Plan	STATE OF CALIFORNIA THE RESOURCES AGENCY DEPARTMENT OF WATER RESOURCES NORTHERN DISTRICT	DRAWING: Pumping_ Plant_2b.dwg
		Revision Date: March 21, 2002	Sheet 16 of 30

Notes:
1) Vertical datum NAVD 88, feet
2) Survey performed July 2000.
3) See Sheet 20 for fish screen detail.
4) Footings/sheet-pile cutoff walls not shown.
5) 7 adult excluder sections not shown.

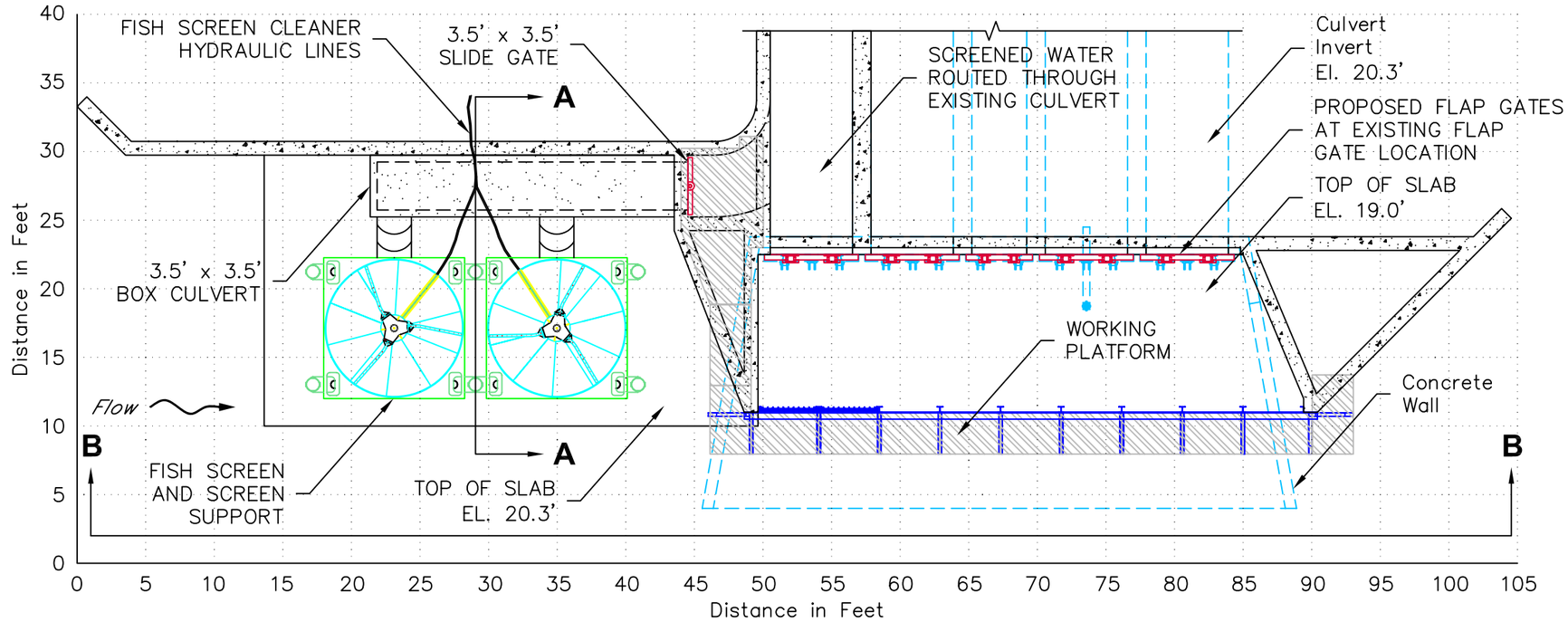

Plan

Scale: 1" = 10'

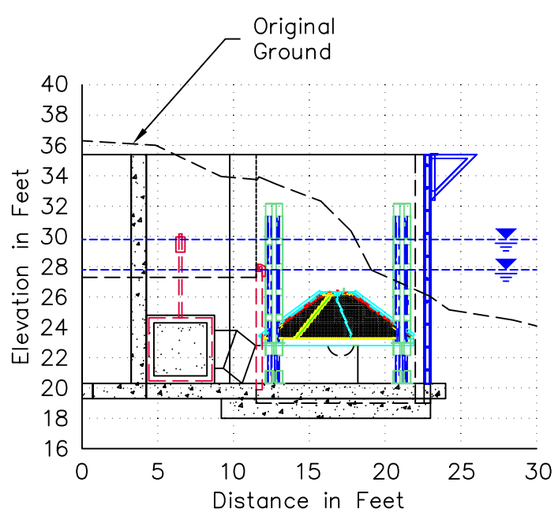

Section A - A

Scale: 1" = 10'

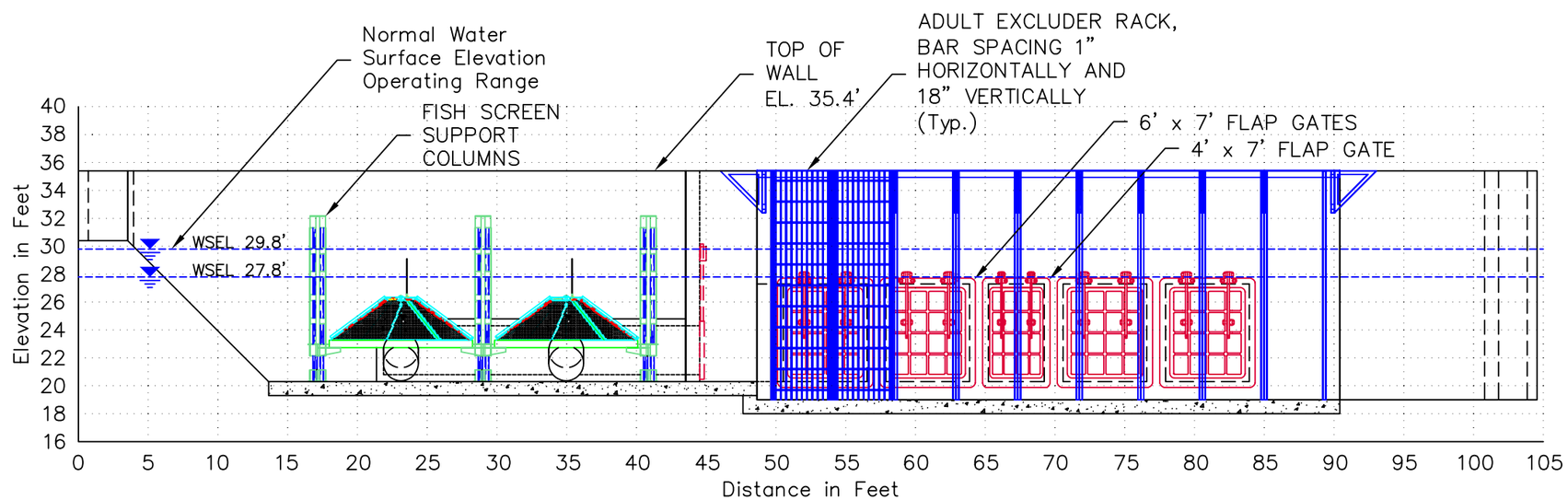

Section B - B

Scale: 1" = 10'

PUMPING PLANT NO. 2 Sutter Bypass near Yuba City, California	Conical Fish Screen Plan and Sections	STATE OF CALIFORNIA THE RESOURCES AGENCY DEPARTMENT OF WATER RESOURCES NORTHERN DISTRICT Revision Date: March 19, 2002	Drawing: Cone_Plan_and _Profile1.3.dwg Sheet 17 of 30

Notes:
1) Aerial photograph taken June 30, 2000.
2) Vertical datum NAVD 88, feet.
3) Contour interval = 1 foot.

0 20 40
Scale in Feet

PUMPING PLANT NO. 2 Sutter Bypass near Yuba City, California	Cylindrical Fish Screen Site Plan	STATE OF CALIFORNIA THE RESOURCES AGENCY DEPARTMENT OF WATER RESOURCES NORTHERN DISTRICT	DRAWING: Pumping_ Plant_2b.dwg
		Revision Date: March 21, 2002	Sheet 18 of 30

Notes:
1) Vertical datum NAVD 88, feet
2) Survey performed July 2000.
3) See sheet 20 for fish screen detail.
4) Footings/sheet-pile cutoff walls not shown.
5) 7 adult excluder sections not shown.

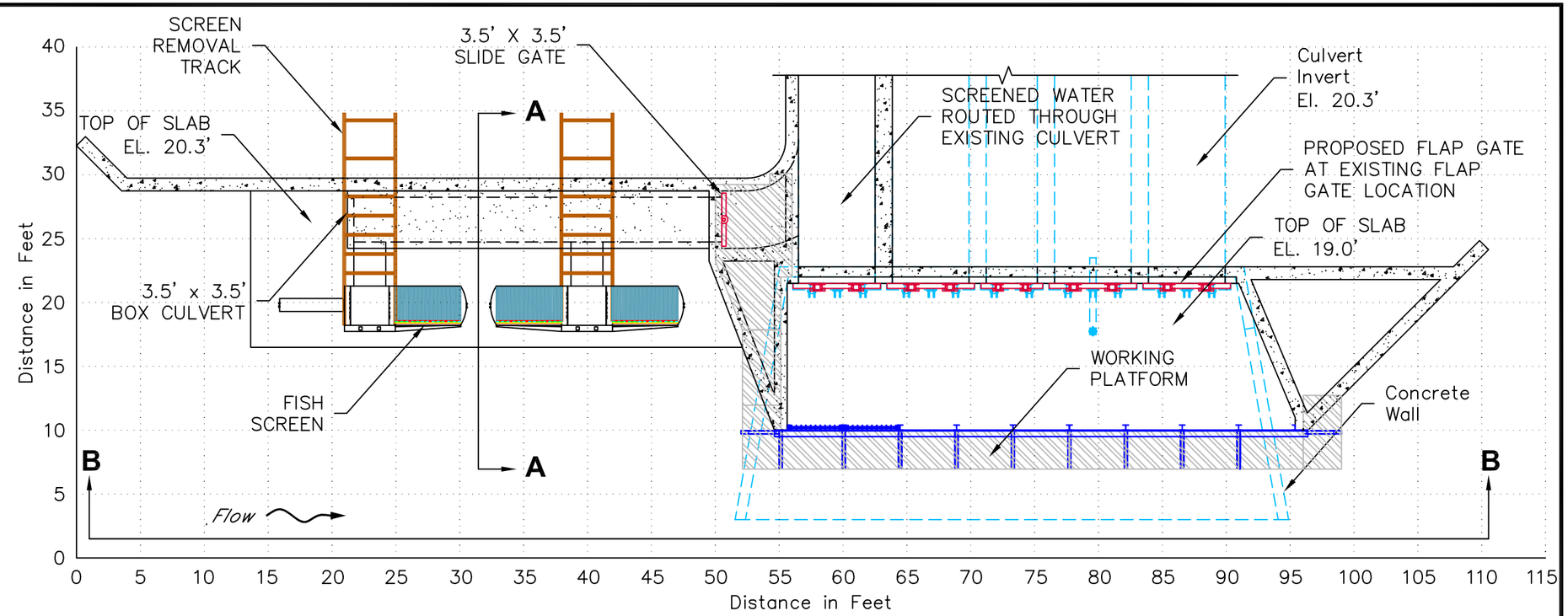

Plan

Scale: 1" = 10'

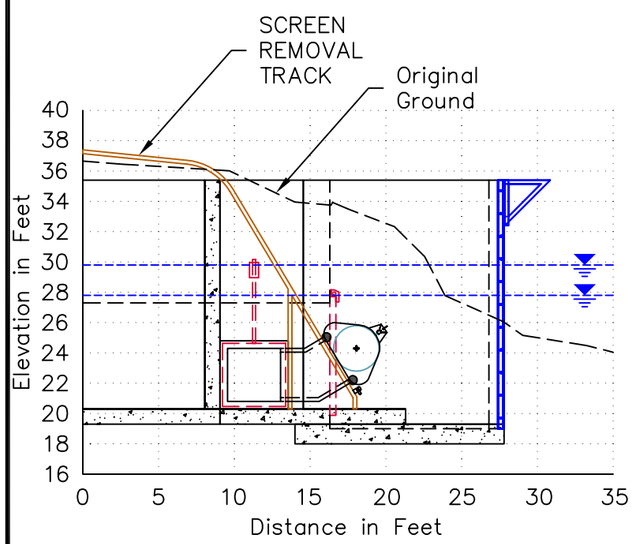

Section A - A

Scale: 1" = 10'

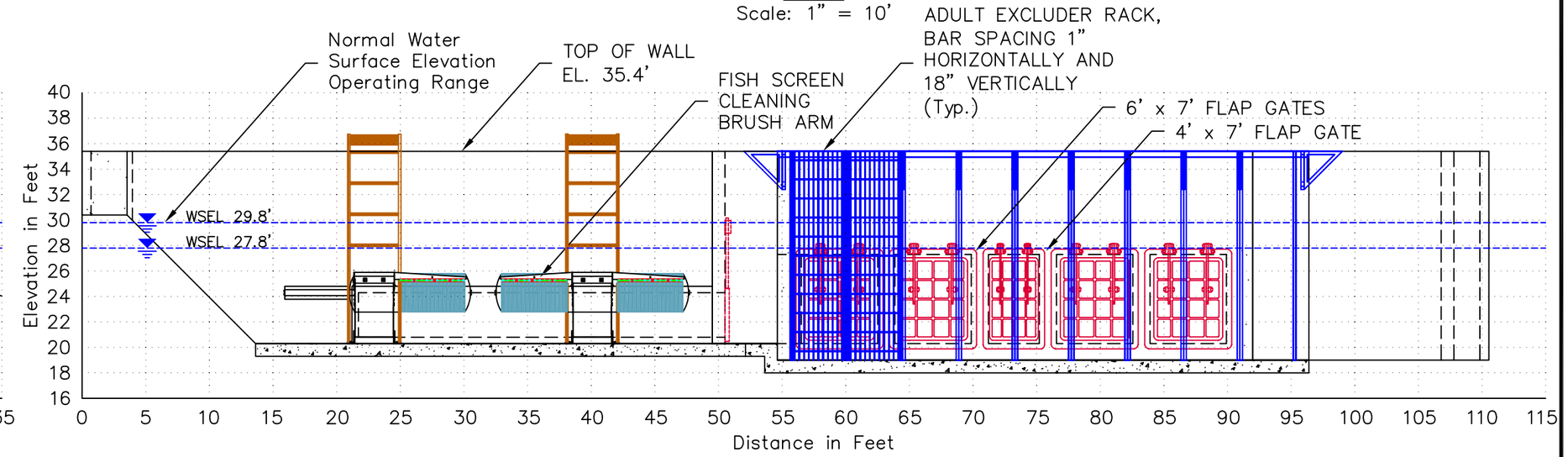

Section B - B

Scale: 1" = 10'

PUMPING PLANT NO. 2 Sutter Bypass near Yuba City, California	Cylindrical Fish Screen Plan and Sections	STATE OF CALIFORNIA THE RESOURCES AGENCY DEPARTMENT OF WATER RESOURCES NORTHERN DISTRICT	Drawing: Cylinder_Plan_and_Profile1.3.dwg
		Revision Date: March 19, 2002	Sheet 19 of 30

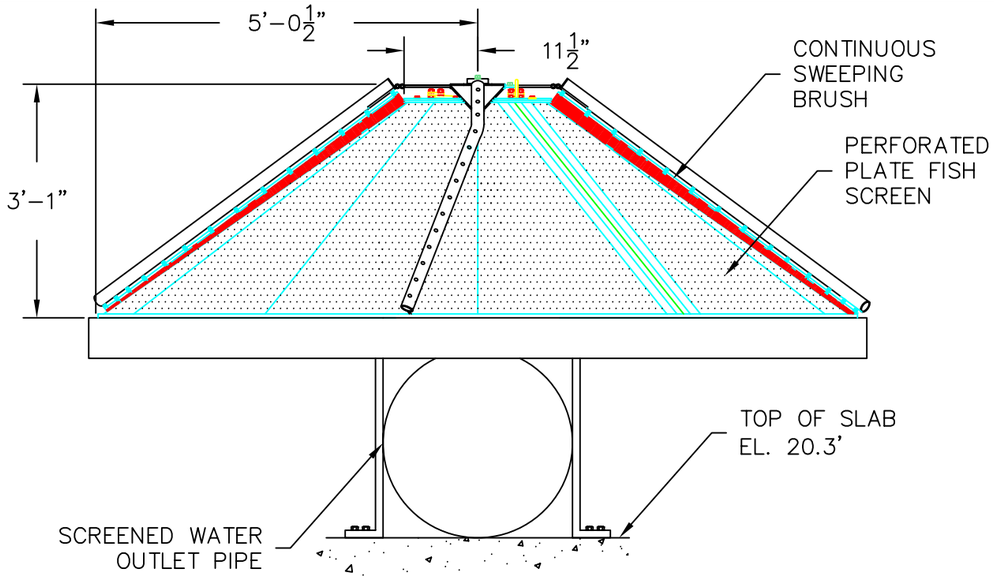

Conical Fish Screen Detail

Scale: 1/2" = 1'

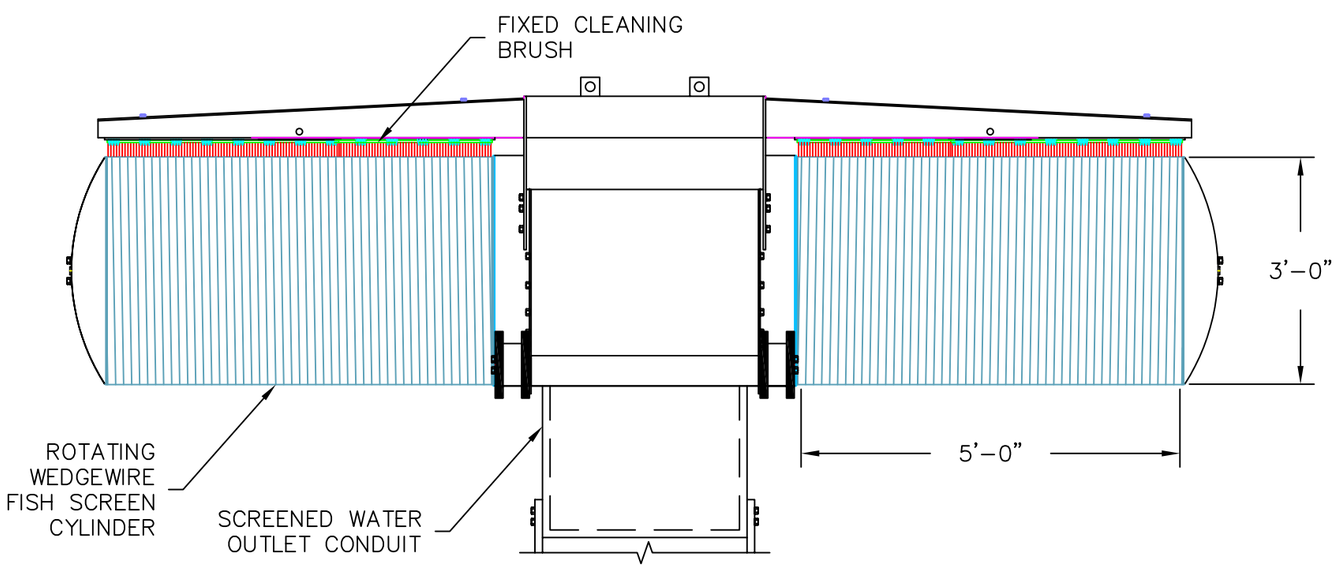

Cylindrical Fish Screen Detail

Scale: 1/2" = 1'

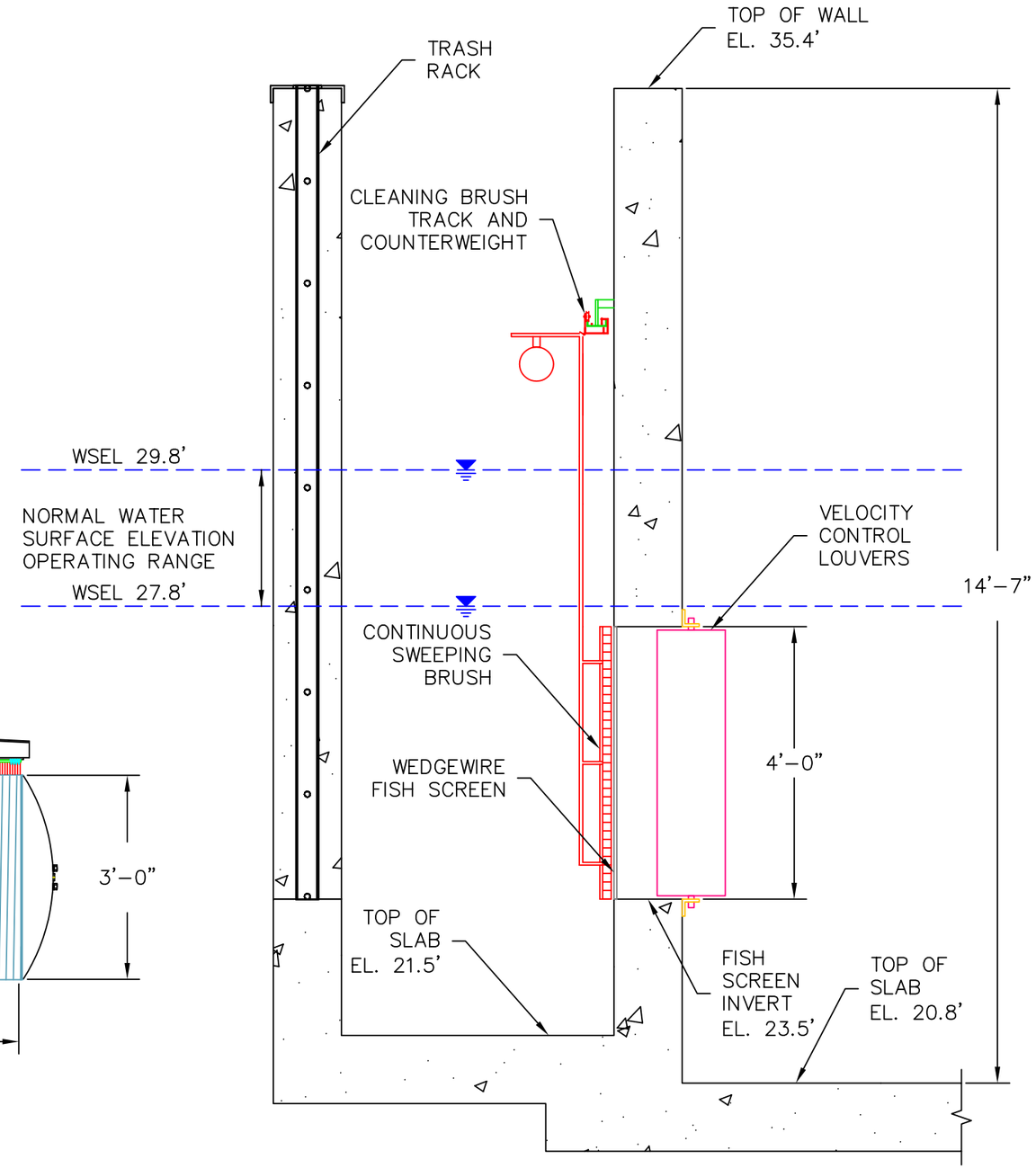

Flat Plate Fish Screen Detail

Scale: 1/2" = 1'

PUMPING PLANT NO. 2 Sutter Bypass near Yuba City, California	Fish Screen Details	STATE OF CALIFORNIA THE RESOURCES AGENCY DEPARTMENT OF WATER RESOURCES NORTHERN DISTRICT	Drawing: Screen_ Details1.1.dwg
		Revision Date: March 19, 2002	Sheet 20 of 30

Pumping Plant No. 3

Introduction

Project Location

Pumping Plant No. 3 is located in Sutter County along the EBC of the Sutter Bypass near Yuba City, California (see Figure 1). The structure is about 7 miles west of Yuba City, approximately one-half mile north of Wadsworth Canal on the Sutter Bypass east levee road and can be accessed from Acacia Road off of Highway 20. The proposed project location is identified on the USGS Tisdale Weir Quadrangle, 7.5-minute series, as “Pump House.” An aerial photo of the project site is shown below (Figure 12).

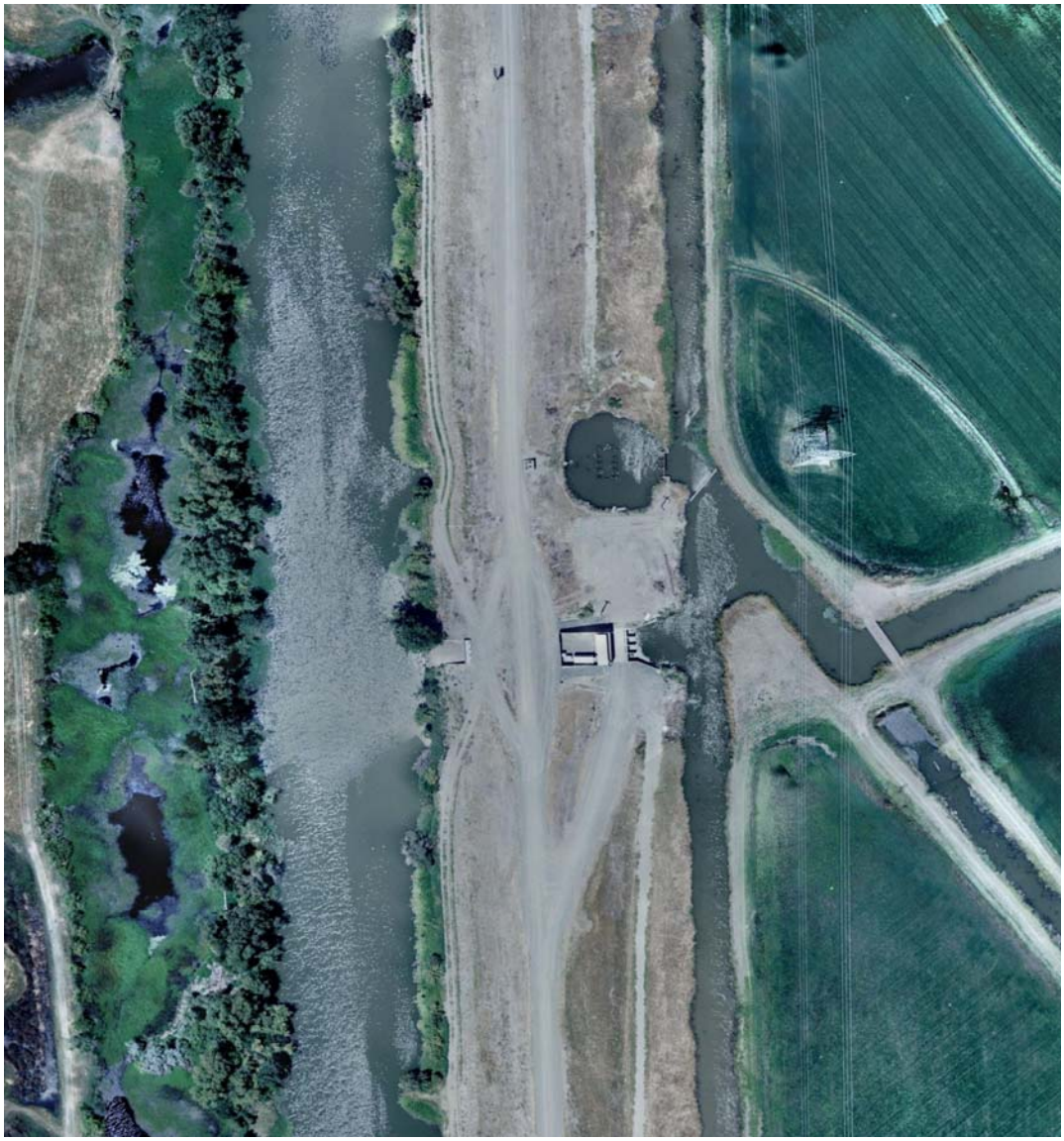

Figure 12. Aerial photograph of Pumping Plant No. 3.

Project Description

The proposed Pumping Plant No. 3 project consists of installing a fish screen at the old Pumping Plant No. 3 outlet structure, which is owned and operated by DWR. The purpose of the project, which includes construction of a fish screen and an adult exclusion barrier, is to prevent losses of fish to the drainage canals. The fish screen will prevent juvenile salmonids and steelhead trout from being drawn into the drainage canals when water is being diverted for agriculture purposes. The adult exclusion barrier will prevent adult salmon and steelhead trout from migrating into the drainage canals when attraction flows are caused by drain water entering the EBC through the culverts.

Pumping Plant No. 3 project area consists of two interrelated facilities, the old pumping plant and the new pumping plant. The old pumping plant facility (Figure 13), constructed in the 1930s, could be used as either a gravity flow or pumping facility. Gravity flow, in both directions, between the EBC and the drainage canals to the east, would be allowed through the pumps and culverts during certain times of the year. If the water level in the drainage canals needed to be lowered, and the WSEL in the EBC was too high for gravity flow, then the pumps would be used to drain the canals. In the 1980s a new pumping facility was constructed downstream, and the pumps and housing infrastructure were removed from the old facility. The old pumping plant sump is now used exclusively for gravity flow into and out of the EBC.

Figure 13. Photograph of old Pumping Plant No. 3 sump and toe drain (looking northeast).

The new pumping facility (Figure 14) serves exclusively to pump water out of the drainage canals and into the EBC. The pump outlet consists of four 30-inch diameter

discharge pipes with flap gates and is located approximately 200 feet downstream of the older facility outlet. The invert of the outlets are about 8.5 feet higher than the normal sump WSEL, thus the new facility does not have the capability to allow gravity flow into the EBC.

Figure 14. Photograph of new Pumping Plant No. 3 (looking toward the EBC).

This project focuses on modification of the old pumping plant's gravity flow system. In the EBC, this system begins with two 4-foot wide by 5-foot tall culvert outlets, each equipped with a wooden flap gate. The flap gates are operational, and in the present configuration, metal supports make it possible for the gates to be held in the open position to allow water to flow by gravity from the EBC into the drainage canals east of the levee (Figure15). The culverts extend approximately halfway through the levee to the location of the levee slide gates. These vertical slide gates, located at the levee crown, are used to control the flow of water through the culverts and help maintain pool elevations inside and outside of the levee. The culverts continue though the levee and terminate in the sump where the old pump house was located (Sheet 22). The rectangular box culverts change to 6-foot diameter pipes between the EBC and the sump. Prior to final design, these culverts will need to be dewatered, inspected, and any repairs will need to be addressed.

Typically, the head differential between the EBC and the drains is zero. Thus, water can be flowing out of or into the EBC with the culverts in the open position.

Figure 15. Photograph of headwall structure and flap gates (looking downstream of EBC).

During periods of high runoff, when the Sutter Bypass WSEL is higher than the allowable WSEL in the drainage canals outside the bypass, the flap gates and levee gates are closed, and the new pumping plant pumps water out of the canals and into the EBC.

When the water level is higher in the EBC than in the old pumping plant sump, water is allowed to flow out of the EBC and into the drainage canals where it can be pumped into the rice fields for irrigation or rice decomposition purposes. When water flows to the fields, it is supplied to the farmers through Poodle Creek, the northeast drain, or the toe drain.

After project completion, when water is flowing out of the drainage canals and into the EBC, the adult fish exclusion barrier will prevent adult upstream migrants from exiting the EBC. When water is flowing out of the EBC and into the drainage canals, the new flap gates will close and water will flow through the fish screen, preventing juvenile fish from being drawn out of the EBC.

Hydrology

The drainage system for Pumping Plant No. 3 consists of two major State-owned drains, Poodle Creek and northeast drain shown on Sheet 22. The Poodle Creek drain, of which DWR only maintains a minor portion near the pumping plant, has a capacity of 120 cfs and is primarily fed by runoff from the Sutter Buttes. The Northeast Drain, which serves the town of Sutter, is 4.4 miles long and present capacity is well over the original design discharge of 50 cfs.

The culverts constructed as a part of the old Pumping Plant No. 3 facility are used to control drainage from a 17 square-mile area. The existing two 4 x 5-foot flap gates on the discharge pipes in the EBC are hoisted open during the irrigation season to facilitate unrestricted gravity flow in both directions. Normally levee gates are left wide open and any water elevation adjustments are made at Weir 2.

According to a draft operations manual, Sutter Maintenance Yard staff normally maintains WSELs in the EBC at the location of old pumping plant between a low of 36.3 to a high of 37.7 feet (NAVD 88). The maximum elevation in the drainage canal, before pumping commences at the new pumping plant, is 37.7 feet. Because Sutter Maintenance Yard staff tries to maintain WSELs in the EBC within a specific range over a variety of flows, a site-specific stage-discharge relationship does not exist.

Most high water at this structure will occur during winter months as a result of rain runoff. During flood season, when it becomes necessary to lower water elevations at the old pumping plant, it is accomplished by removing flashboards at Weir 2, approximately 1.5 miles downstream. When the flashboards can no longer be removed and high water still exists in the EBC (WSELs greater than 37.7 feet), both the flap gates and levee gates are closed and the new pumping plant is used to pump excess water from the drainage canals into the EBC.

If the water supply is from the drainage canals and low water exists in the EBC (WSEL less than 36.3 feet), the levee slide gates can be closed, or partially closed, to maintain head outside of the levee. Adding flashboards at Weir 2 will help raise WSELs in the EBC. Generally, adding one flashboard across the top of each of the 12 bays will raise WSEL at the old pumping plant approximately 0.5 feet.

Stage records for both the EBC and the drainage canals for water years 1990 to 1996 were analyzed, and a frequency curve was created (Appendix B). The stage differential versus time was plotted to analyze the flow patterns. Based on 1,136 stage records over 7 water years, recorded head differentials indicate that water flowed from the EBC into the drainage canal approximately 3% of the time. A zero stage differential was recorded nearly 68% of the time, indicating there was no flow through the levee culverts. However, since the stage records were recorded to 0.05 feet accuracy, a recorded head differential of zero could have actually been a head differential of up to 0.1 feet. Therefore, it is possible that up to 60 cfs (based on Orifice Eq. with $C_d = 0.6$) could have been flowing either way through the levee culverts when a zero stage differential was recorded. Water flowing into the EBC was observed a little more than 2% of the time. The remaining 27% of the records occurred when the levee gates were closed, resulting in no flow through the culverts.

During the period of record when the water is flowing from the EBC into the drainage canals, the maximum observed head differential was 0.8 feet (Appendix B). Using the orifice equation (with $C_d = 0.6$), based on the maximum observed head differential of 0.8 feet, the maximum flow was approximately 86 cfs through one culvert.

Using the average observed head differential of 0.17 feet, the average flow was approximately 79 cfs through both culverts.

The maximum observed head differential was 1 foot, when the flow was from the drainage canals into the EBC and the two levee gates in the fully open position. This equated to a flow of approximately 193 cfs through both culverts. Using the average observed head differential of 0.23 feet, the average flow would be approximately 92 cfs through both culverts.

Adult Fish Exclusion Barriers

Sizing and Configuration

The purpose of the adult fish exclusion barrier is to prevent adult Chinook salmon and steelhead trout from leaving the Lower Butte Creek stream system. According to the USFWS manual *Fish Passageways and Bypass Facilities*, the maximum recommended spacing between vertical bars is 1.5 inches for Chinook salmon and 1 inch for steelhead trout. Because steelhead trout are present in the Sutter Bypass, 1-inch bar spacing will be used.

In determining the size of the exclusion barrier, the amount of submerged open area in the bar rack and the head loss through the bar rack were considered. It was decided that the bar rack assembly should have at least as much open area as the total area of the existing culverts, and the maximum allowable head loss should not exceed 0.1 feet. Using these design parameters, the three types of bars considered were round steel or aluminum bars, rectangular steel or aluminum bars, and rectangular polyethylene bars with rounded leading and trailing edges. The rectangular polyethylene bars with the rounded edges will provide the best combination of hydraulic performance, durability, and resistance to corrosion. These bars are comparable in cost to coated steel bars, weigh approximately 70 percent less, and inhibit aquatic plant growth.

Using a bar width of 0.5 inches with a 1-inch clearance between bars, and a minimum probable water depth of 6.5 feet, four 4-foot wide bays are required to exceed the minimum desirable open area. The maximum probable velocity through the bar racks was calculated assuming a 1-foot head differential between the drainage canals and the EBC, and that both levee gates would be open. With a calculated flow of 193 cfs through the culverts, and a corresponding approach velocity of 3 fps, the head loss will be approximately 0.1 feet.

To allow for variations in the water depth in the EBC and to provide a minimum of 3 feet of freeboard, the excluder racks will be 13.5 feet tall (2 stacked 6.75-foot sections). Each 4.33-foot wide rack will slide vertically down in a track formed by wide flange steel beams. A backhoe, boom truck, or other piece of equipment could be used to remove the racks for maintenance or repair. At about 7.4 pounds per square foot, each section would weigh approximately 217 pounds.

Operation and Maintenance

Operation and maintenance activities, to be performed by DWR personnel, will consist of periodic inspection and raking to prevent clogging. Except during floodflows, the debris load should be minimal because the water flowing through the racks will come from the irrigation canals, not from the Sutter Bypass. When the stage is higher in the EBC than in the drainage canals, the flap gates will close, and there will be no flow through the adult exclusion barrier. The racks will rest within a track system to facilitate easy removal for inspection, major maintenance, or repairs.

Flat Plate Fish Screen Alternative

Sizing and Configuration

The flat plate fish screen design and required surface area of the screen were determined using the DFG Fish Screening criteria for steelhead trout, and NOAA Fisheries Fish Screening criteria for anadromous salmonids. With a maximum allowable approach velocity of 0.33 fps for continually cleaned screens in streams and rivers and a maximum diversion of 56.1 cfs, the required wetted screen area is 170 square feet. Adding 25 percent (42.5 square feet) to the required wetted area to compensate for reduction of screen area due to structural members, the required screen area becomes 212.5 square feet. Observed sweeping velocities at the location of the proposed fish screen ranged from 0 fps during low flow to approximately 0.5 fps during high flow. Because of the gentle channel slope and slow velocities, the sweeping velocity criteria may not be met during certain flow conditions, depending on the amount of water being diverted.

Sheet 25 shows the plan and elevation view of the flat plate fish screen layout. The fish screen will have a continuous cleaning type apparatus, which uses a sweeping brush powered by a hydraulic motor. The equipment used to power the motor will be located where it will not be inundated by high flows in the Sutter Bypass. The screen face will consist of removable panels of wedgewire set perpendicular to the reinforced concrete slab. The screen consists of six 6-foot square panels totaling a screen area of 216 square feet. The square panels will allow the wedgewire to be orientated horizontally or vertically. Louvers will be installed behind the screen to ensure an even flow distribution through the face of the screen. The screen invert will be elevated 6 inches above the concrete slab to prevent sediment from interfering with fish screen operations (Sheet 30).

WSELs in the Sutter Bypass at the location of the flat plate fish screen are controlled by a flashboard dam, Weir No. 2, approximately 1.5 miles downstream. The operating WSELs are maintained between 36.3 and 37.7 feet (NAVD 88). The invert elevation for the proposed screen was set at 29.7 feet so that the fish screen will be completely submerged by approximately 0.6 feet at the low operating WSEL. Thus, at the minimum operating WSEL, the screen will be submerged at all times ensuring the maximum approach velocity criteria is not exceeded. The fish screen structure walls are 13.5 feet tall, leaving a 5.5-foot freeboard during high operating WSELs.

Trashracks will be built with 4-inch wide openings between vertical members and 18-inch clearance between horizontal members. The trashracks will be constructed 4 feet in front of the screen to prevent damage to the screen face from large floating debris. Each trashrack bay will be 4-feet wide and 13-feet tall and will contain two trashrack sections 4.3-feet wide and 6.5-feet tall, stacked one on top of another.

Two 4-foot square automated vertical slide gates, shown on Sheet 25, will be installed to control flow from the EBC into the drainage canals. The gates were sized so

that no parts are extruding above the structure wall, and to minimize lateral intrusion of the structure into the EBC.

Two 4 x 5-foot flap gates, shown on Sheet 25, will be installed to allow flow from the drainage canals into the EBC and to prevent flow from returning when the WSELs are higher in the EBC than in the drainage canals. To ensure the flow through the culverts is not restricted, the proposed flap gates need to be the same size or greater than the existing gates. An adult fish excluder, as described in the previous section, will be installed in front of the flap gates to prevent adult salmon and steelhead trout from entering and getting trapped in the drainage canals.

Stage sensors will be installed on the upstream and downstream side of the slide gates to ensure fish screen approach velocity criteria are met. The primary function of the sensors is to monitor the head differential across the gates, and thus flow through the gate orifices. These sensors may serve to throttle the gates for flow control, send an alarm, or shut down the diversion if an undesirable condition is sensed. A flow direction sensor will be installed in one of the culverts to detect when flow is entering the EBC from the drainage canals. The sensor will trigger an action to close the vertical slide gates, thus preventing backflow through the fish screen when flow is entering the EBC through the culverts and flap gates.

Steel grating, shown on Sheet 25, will be used to cover the entire screen bay and other apertures to provide safety for maintenance workers and to exclude debris. The grating will also be used as a walkway to access the working platform for maintenance activities.

Operation and Maintenance

Access to the site for normal operation and maintenance will be via the existing lower levee road that leads to the proposed fish screen structure, as shown on sheets 22 and 24. Two access bridges will be constructed across the structure, shown on Sheet 25, for equipment used during maintenance activities.

Sutter Maintenance Yard staff will operate and maintain the fish screen structure. Operational requirements will include daily checks to ensure that the screen cleaning equipment is functioning properly. Maintenance responsibilities include periodically replacing the brush cleaning system components, occasionally cleaning sediment from the screen bay, and checking gates and culverts for obstructions and debris. Most floating debris will be deflected or captured by the trashracks. The trashracks will be manually cleaned as needed.

If a maintenance problem occurs that requires the screen to be removed from service, the structure can be dewatered while repairs are made. Included in this design are bulkheads that can be installed in the trashrack bays. With the bulkheads installed and the slide gates closed, water can be pumped out of the screen bay. If necessary, a

boom truck or other equipment can be used to remove fish screen panels or components.

An additional operational requirement will be to maintain stage sensors upstream and downstream of the vertical slide gates and the flow directional sensor in the culvert. Sutter Maintenance Yard staff will be responsible for ensuring the sensors are properly working under design parameters.

Conical Fish Screen Alternative

Sizing and Configuration

The conical fish screen design and required surface area of the screen are controlled by the DFG Fish Screening criteria for steelhead trout, and NOAA Fisheries Fish Screening criteria for anadromous salmonids. With a maximum allowable approach velocity of 0.33 fps for continually cleaned screens in streams and rivers, cone screen manufacturer specifications state that 121-inch base diameter by 37-inch tall cone screens have a capacity of 33 cfs. Observed sweeping velocities at the location of the proposed fish screen ranges from 0 fps during low flow, to approximately 0.5 fps during high flow. Because of the gentle channel slope and slow velocities, the sweeping velocity criteria may not be met during certain flow conditions, depending on the amount of water being diverted.

Sheet 27 shows the plan and sections view of the conical fish screen layout. Because each screen has a capacity of 33 cfs, and the potential diversion amount is 56.1 cfs, two cone screens are required. Each conical fish screen will have a continuous cleaning type apparatus, which uses a rotating sweeping brush controlled by a hydraulic motor located inside the fish screen. The equipment used to power the hydraulic motor will be contained in a small building located where it will not be inundated by high flows from the Sutter Bypass.

The screen face will consist of perforated plate material set in a cone-shaped frame that will rest on the reinforced concrete slab. There will be two 121-inch base diameter, 22-inch top diameter by 37-inch tall, conical screens (Sheet 30). Adjustable louvers will be installed inside the screens to provide velocity control through the screen. The louvers are adjusted by turning a rod that extends through the screen face. The base of the fish screen will be raised above the concrete floor to prevent sediment from interfering with fish screen operation. Six columns will be anchored to the floor to support the fish screens and to aid in screen removal and installation.

WSELs in the Sutter Bypass at the location of the conical fish screen are controlled by Weir No. 2, approximately 1.5 miles downstream. The operating WSELs are maintained between 36.3 and 37.7 feet (NAVD 88). The invert elevation for the proposed screen was set at 32.7 feet so that the fish screen will be completely submerged by approximately 0.5 feet at the low operating WSEL. Thus, at the minimum operating WSEL, the screen will be submerged at all times ensuring the maximum approach velocity criteria is not exceeded.

Screened water will pass through a short section of 30-inch diameter pipe, and then into a 3.5-foot square concrete box culvert. At the end of the culvert there is one 3.5-foot square slide gate, shown on Sheet 27, which will be installed to control flow from the EBC into the drainage canals.

Two 4 x 5-foot flap gates, shown on Sheet 27, will be installed to allow flow from the drainage canals into the EBC and, in combination with the new slide gate, prevent flow out of the EBC, except through the new fish screen. To ensure the flow through the culverts is not restricted, the proposed flap gates are the same size as the existing gates. An adult fish exclusion barrier, as described in the previous section, will be installed in front of the flap gates to prevent adult salmon and steelhead trout from entering and getting trapped in the drainage canals.

Stage sensors will be installed on the upstream and downstream side of the slide gate to ensure fish screen approach velocity criteria are met. The primary function of these sensors is to monitor the flow through the gate as a function of the head differential across the gate. These sensors may serve to actuate controls to throttle the gate for flow control, send an alarm, or shut down the diversion if an undesirable condition is sensed. A flow direction sensor will be installed in the diversion culvert to detect when flow is entering the EBC from the drainage canals. This sensor will trigger an action to close the vertical slide gate, thus preventing backflow through the fish screen when flow is entering the EBC through the culverts and flap gates.

Operation and Maintenance

Access to the site for normal operation and maintenance will be via the existing lower levee road that leads to the proposed fish screen structure, as shown on sheets 22 and 26.

Sutter Maintenance Yard staff will operate and maintain the fish screen structure. Operational requirements will include daily checks, or more often as needed, to ensure that the screen cleaning equipment is functioning properly. Maintenance responsibilities include periodically repairing or replacing the brush cleaning system components, occasionally cleaning sediment from around the screens, checking the operation of gates and culverts, and clearing obstructions and debris. Most floating debris should pass over the top of the fish screens, but some debris may get caught on the screen support columns.

If a maintenance problem occurs that requires the screen to be removed from service, the screens can be lifted out of the EBC using a boom truck or similar equipment. If necessary, the fish screens could be dewatered in place by pulling flashboards at Weir No. 2.

An additional operational requirement will be to maintain stage sensors upstream and downstream of the vertical slide gate and the flow direction sensor in the culvert. Sutter Maintenance Yard staff will need to ensure that the sensors continue to operate under design parameters.

Cylindrical Fish Screen Alternative

Sizing and Configuration

The cylindrical fish screen design and required surface area of the screen were determined using the DFG Fish Screening criteria for steelhead trout, and NOAA Fisheries Fish Screening criteria for anadromous salmonids (Appendix D). With a maximum allowable approach velocity of 0.33 fps for continually cleaned screens in streams and rivers, cylindrical screen manufacturer specifications state that 30-inch diameter by 5-foot long cylindrical screens have a capacity of 15 cfs. Observed sweeping velocities at the location of the proposed fish screen ranges from 0 fps during low flow, to approximately 0.5 fps during high flow. Because of the gentle channel slope and slow velocities, the sweeping velocity criteria may not be met during certain flow conditions, depending on the amount of water being diverted.

Sheet 29 shows the plan and sections view of the cylindrical fish screen layout. Because each screen has a capacity of 15 cfs with a 0.3 fps approach velocity (according to the manufacturer), and the potential diversion amount is 56.1 cfs, four cylindrical screens are required. Each cylindrical fish screen will have a continuous cleaning type apparatus, which consists of a fixed brush head pressing against a rotating drum. A hydraulic motor located inside the fish screen rotates the drum. The equipment used to power the hydraulic motor will be contained in a small building located where it will not be inundated by high flows in the Sutter Bypass.

The screen face will consist of wedgewire attached to a cylindrical frame resting on a track system that is attached to the reinforced concrete slab. There will be four 30-inch diameter by 5-foot long cylindrical screens (Sheet 30). The fish screen manufacturer will be responsible for ensuring that there is equal flow through the fish screen. The base of the fish screen will be raised above the concrete floor to prevent sediment from interfering with the fish screen operation.

WSELs in the Sutter Bypass at the location of the cylindrical fish screen are controlled by Weir No. 2, approximately 1.5 miles downstream. The operating WSELs are maintained between 36.3 and 37.7 feet (NAVD 88). The invert elevation for the proposed fish screen is set at 31.8 feet so that the top of the fish screen will be submerged by approximately 1.5 feet at the low water condition, and to meet the manufacturer recommendation to keep at least one-half screen diameter of water above the screen at all times. Thus, at the minimum operating WSEL, the screens will be submerged at all times ensuring the maximum allowable approach velocity will not be exceeded if the full diversion is being drawn.

Screened water will pass through a short section of 3-foot square culvert, and then into a 3.5-foot square concrete box culvert. At the end of the culvert there is one 3.5-foot square slide gate, shown on Sheet 29, which will be installed to control flow from the EBC into the drainage canals.

Two 4 x 5-foot flap gates, shown on Sheet 29, will be installed to allow flow from the drainage canals into the EBC and, in combination with the new slide gate, prevent flow out of the EBC, except through the new fish screen. To ensure the flow through the culverts is not restricted, the proposed flap gates are the same size as the existing gates. An adult fish exclusion barrier, as described in the previous section, will be installed in front of the flap gates to prevent adult salmon and steelhead trout from entering and getting trapped in the drainage canals.

Stage sensors will be installed on the upstream and downstream side of the slide gate to ensure fish screen approach velocity criteria are met. The primary function of these sensors is to monitor the flow through the gate as a function of the head differential across the gate. These sensors may serve to actuate controls to throttle the gates for flow control, send an alarm, or shut down the diversion if an undesirable condition is sensed. A flow direction sensor will be installed in the diversion culvert to detect when flow is entering the EBC from the drainage canals. This sensor will trigger an action to close the vertical slide gate, thus preventing backflow through the fish screen when flow is entering the EBC through the culverts and flap gates.

Operation and Maintenance

Access to the site for normal operation and maintenance will be via the existing lower levee road that leads to the proposed fish screen structure, as shown on sheets 22 and 28.

Sutter Maintenance Yard staff will operate and maintain the fish screen structure. Operational requirements will include daily checks to ensure that the screen cleaning equipment is functioning properly. If necessary, the fish screens can be hoisted out of the water, using a winch, for inspection. When the fish screens are lowered back down the track into the water, a sensor indicates when the screen is properly docked in place. Maintenance responsibilities include the periodic repair or replacement of the brush cleaning system components, occasional cleaning of sediment from around the screens, checking the operation of gates and culverts, and clearing obstructions and debris. Most floating debris should pass over the top of the fish screens, but some debris may get caught on the screen removal track system.

If a maintenance problem occurs that requires the screen to be removed from service, the screens can be hoisted out of the EBC using a winch and the included cable system. If necessary, the fish screens could be dewatered in place by removing flashboards at Weir No. 2.

An additional operational requirement will be to maintain stage sensors upstream and downstream of the vertical slide gate and the flow direction sensor in the culvert. Sutter Maintenance Yard staff will need to ensure that the sensors continue to operate under design parameters.

Design and Construction Summary

Site Geology and Environmental Documentation

Concurrent with the preliminary design process, the DOE Project Geology Section was investigating site geology. Results of this investigation are contained in Geology Report No. 94-00-17, a memorandum report.

During the geologic investigation, Project Geology staff reviewed site history and gathered existing geologic data. The results from three boreholes, drilled in 1977 as part of a foundation investigation for the new pumping plant, are included in the memorandum report. Two additional holes were drilled in October 2001 at the location of the proposed fish facility structure to help define the subsurface conditions where structure foundations will be located. The information from past and recent investigations will be used for the final design of footings and cutoff walls, and to help determine dewatering requirements. The project area will probably be dewatered using sheet-piles and pumps. Removing flashboards from Weir No. 2 can also lower the water level.

On April 30, 2001, ND environmental scientists performed an environmental site survey of the project area. The purpose of this survey was to investigate potential impacts to sensitive plants, fish and wildlife, water quality, recreation, and land use. Appendix C contains a list of environmental permits potentially required and an environmental checklist form for the proposed project. No threatened or endangered species were identified within the project area.

Construction Summary

After a design alternative is selected for each site and funding is procured, DOE will complete the final designs and specifications. The DOE Contract Services Branch will administer the construction contract. DWR Sacramento Project Headquarters will perform construction inspection.

Construction access is proposed from Highway 20 via Acacia Road, to Wadsworth Canal and then to the Sutter Bypass levee. Wadsworth Canal and the Sutter Bypass east levee roads are predominantly gravel surfaced and are presently in good condition. If the existing roads are damaged during the construction process, they should be repaired prior to project completion.

The limits of the construction, staging areas, and access roads should be marked and managed to prevent vehicular access outside the designated work zone. In addition to the designated staging area, a small storage area may have to be constructed to store equipment and fuel.

Temporary sheet-pile cofferdams may be built around the construction area. This area will be dewatered prior to and during construction activities. The EBC is

relatively wide at the project site, so the dewatering process will not significantly impact flow in the EBC.

In the old pumping plant gravity flow culverts, any old connections or collars that could restrict the flow through the culverts will need to be removed. At the EBC end of the culverts, the existing flap gates and headwall will need to be removed.

Excavation will be required at the toe of the levee at the site of the existing headwall and in the area immediately upstream of the headwall where the fish screen will be located. Excavated concrete and earth will be hauled to a disposal site, which will be determined by the contractor and will be subject to DWR approval.

The fish screen and adult exclusion barrier will then be constructed. A small building will need to be constructed near the top of the levee that will house mechanical and electrical equipment needed for the operation of the fish screen cleaning and flow monitoring mechanisms. After construction, backfilling, site finish work, and erosion control will be completed.

Table 10. Flat plate fish screen alternative preliminary cost estimate.

Pumping Plant No. 3 - Flat Plate Fish Screen Alternative
Preliminary Cost Estimate for Design and Construction

ITEM	DESCRIPTION	QUANTITY	UNIT	UNIT COST	TOTAL COST
	MISCELLANEOUS				
1	Mobilization/Demobilization	1	LS	$ 75,000	$ 75,000
2	Site Work, Access & Mitigation	1	LS	$ 18,000	$ 18,000
3	Dewatering	1	LS	$ 216,000	$ 216,000
4	Remove Existing Headwall and Gates	13	CY	$ 300	$ 4,000
					$ 313,000
	ADULT FISH EXCLUSION BARRIER				
5	Excavation	112	CY	$ 15	$ 2,000
6	Sheet-piles	935	SF	$ 26	$ 24,000
7	H-piles	14	EA	$ 1,000	$ 14,000
8	Concrete (Walls)	41	CY	$ 800	$ 33,000
9	Concrete (Slab)	17	CY	$ 500	$ 9,000
10	Gates & Brackets (Flap Gates)	1	LS	$ 9,000	$ 9,000
11	Fish Excluder Racks	243	SF	$ 50	$ 12,000
12	Excluder Rack Metalwork	1	LS	$ 2,000	$ 2,000
13	Working Platform	73	SF	$ 25	$ 2,000
14	Grating	70	SF	$ 25	$ 2,000
15	Access Bridge	6	CY	$ 800	$ 5,000
					$ 114,000
	FISH SCREEN				
16	Excavation	305	CY	$ 15	$ 5,000
17	Sheet-piles	2560	SF	$ 26	$ 67,000
18	H-piles	31	EA	$ 1,000	$ 31,000
19	Concrete (Walls)	56	CY	$ 800	$ 45,000
20	Concrete (Slab)	30	CY	$ 500	$ 15,000
21	Concrete (Access Bridge)	7	CY	$ 800	$ 6,000
22	Gates & Brackets (Fish Screen Control)	1	LS	$ 21,000	$ 21,000
23	Wedgewire Screen & Installation	216	SF	$ 150	$ 32,000
24	Louvers & Installation	216	SF	$ 100	$ 22,000
25	Screen Cleaning System	1	LS	$ 18,000	$ 18,000
26	Electrical Control Unit (Screen Cleaner)	1	LS	$ 15,000	$ 15,000
27	Trash Racks	527	SF	$ 26	$ 14,000
28	Trash Rack Metalwork	1	LS	$ 5,000	$ 5,000
29	Grating	478	SF	$ 25	$ 12,000
30	Stage & Flow Direction Sensors	3	EA	$ 10,000	$ 30,000
31	Electrical Control Unit (Sensors & Gates)	1	LS	$ 30,000	$ 30,000
32	Control Unit Building	1	LS	$ 20,000	$ 20,000
33	Dewatering Panels	546	SF	$ 7	$ 4,000
					$ 392,000
34	**Construction Cost**				$ **819,000**
35	**Contingency @ 25%**				$ 205,000
36	**Construction Cost Subtotal**				**$ 1,024,000**
37	**Engineering @ 50%**				$ 512,000
38	**Environmental @ 3%**				$ 31,000
39	**Construction Inspection @15%**				$ 154,000
40	**Contract Admin @ 10%**				$ 102,000
41	**Total**				**$ 1,820,000**

Table 11. Conical fish screen alternative preliminary cost estimate.

Pumping Plant No. 3 - Conical Fish Screen Alternative
Preliminary Cost Estimate for Design and Construction

ITEM	DESCRIPTION	QUANTITY	UNIT	UNIT COST	TOTAL COST
	MISCELLANEOUS				
1	Mobilization/Demobilization	1	LS	$ 75,000	$ 75,000
2	Site Work, Access & Mitigation	1	LS	$ 17,000	$ 17,000
3	Dewatering	1	LS	$ 204,000	$ 204,000
4	Remove Existing Headwall and Gates	13	CY	$ 300	$ 4,000
					$ 300,000
	ADULT FISH EXCLUSION BARRIER				
5	Excavation	100	CY	$ 15	$ 2,000
6	Sheet-piles	1045	SF	$ 26	$ 27,000
7	H-piles	17	EA	$ 1,000	$ 17,000
8	Concrete (Walls)	36	CY	$ 800	$ 29,000
9	Concrete (Slab)	15	CY	$ 500	$ 8,000
10	Gates & Brackets (Flap Gates)	1	LS	$ 9,000	$ 9,000
11	Fish Excluder Racks	243	SF	$ 50	$ 12,000
12	Excluder Rack Metalwork	1	LS	$ 2,000	$ 2,000
13	Working Platform	112	SF	$ 25	$ 3,000
					$ 109,000
	FISH SCREEN				
14	Excavation	301	CY	$ 15	$ 5,000
15	Sheet-piles	1960	SF	$ 26	$ 51,000
16	H-piles	6	EA	$ 1,000	$ 6,000
17	Concrete (Walls)	27	CY	$ 800	$ 22,000
18	Concrete (Slab)	36	CY	$ 500	$ 18,000
19	Gates & Brackets (Fish Screen Control)	1	LS	$ 9,000	$ 9,000
20	Conical Screen & Installation	2	EA	$ 84,000	$ 168,000
21	Stage & Flow Direction Sensors	3	EA	$ 10,000	$ 30,000
22	Electrical Control Unit (Sensors & Gates)	1	LS	$ 30,000	$ 30,000
23	Control Unit Building	1	LS	$ 20,000	$ 20,000
					$ 359,000
24	**Construction Cost**				**$ 768,000**
25	**Contingency @ 25%**				$ 192,000
26	**Construction Cost Subtotal**				**$ 960,000**
27	**Engineering @ 50%**				$ 480,000
28	**Environmental @ 3%**				$ 29,000
29	**Construction Inspection @15%**				$ 144,000
30	**Contract Admin @ 10%**				$ 96,000
31	**Total**				**$ 1,710,000**

Table 12. Cylindrical fish screen alternative preliminary cost estimate.

Pumping Plant No. 3 - Cylindrical Fish Screen Alternative
Preliminary Cost Estimate for Design and Construction

ITEM	DESCRIPTION	QUANTITY	UNIT	UNIT COST	TOTAL COST
	MISCELLANEOUS				
1	Mobilization/Demobilization	1	LS	$ 75,000	$ 75,000
2	Site Work, Access & Mitigation	1	LS	$ 18,000	$ 18,000
3	Dewatering	1	LS	$ 209,000	$ 209,000
4	Remove Existing Headwall and Gates	13	CY	$ 300	$ 4,000
					$ 306,000
	ADULT FISH EXCLUSION BARRIER				
5	Excavation	100	CY	$ 15	$ 2,000
6	Sheet-piles	1045	SF	$ 26	$ 27,000
7	H-piles	17	EA	$ 1,000	$ 17,000
8	Concrete (Walls)	36	CY	$ 800	$ 29,000
9	Concrete (Slab)	15	CY	$ 500	$ 8,000
10	Gates & Brackets (Flap Gates)	1	LS	$ 9,000	$ 9,000
11	Fish Excluder Racks	243	SF	$ 50	$ 12,000
12	Excluder Rack Metalwork	1	LS	$ 2,000	$ 2,000
13	Working Platform	112	SF	$ 25	$ 3,000
					$ 109,000
	FISH SCREEN				
14	Excavation	342	CY	$ 15	$ 5,000
15	Sheet-piles	2200	SF	$ 26	$ 57,000
16	H-piles	7	EA	$ 1,000	$ 7,000
17	Concrete (Walls)	33	CY	$ 800	$ 26,000
18	Concrete (Slab)	35	CY	$ 500	$ 18,000
19	Gates & Brackets (Fish Screen Control)	1	LS	$ 9,000	$ 9,000
20	Cylindrical Screen & Installation	2	EA	$ 94,000	$ 188,000
21	Stage & Flow Direction Sensors	3	EA	$ 10,000	$ 30,000
22	Electrical Control Unit (Sensors & Gates)	1	LS	$ 30,000	$ 30,000
23	Control Unit Building	1	LS	$ 20,000	$ 20,000
					$ 390,000
24	**Construction Cost**				$ **805,000**
25	**Contingency @ 25%**				$ 201,000
26	**Construction Cost Subtotal**				**$ 1,006,000**
27	**Engineering @ 50%**				$ 503,000
28	**Environmental @ 3%**				$ 30,000
29	**Construction Inspection @15%**				$ 151,000
30	**Contract Admin @ 10%**				$ 101,000
31	**Total**				**$ 1,790,000**

PRELIMINARY ENGINEERING DRAWINGS FOR

LOWER BUTTE CREEK PROJECT
SUTTER BYPASS
PUMPING PLANT NO. 3
FISH SCREENING PROJECT

SUTTER COUNTY, CALIFORNIA

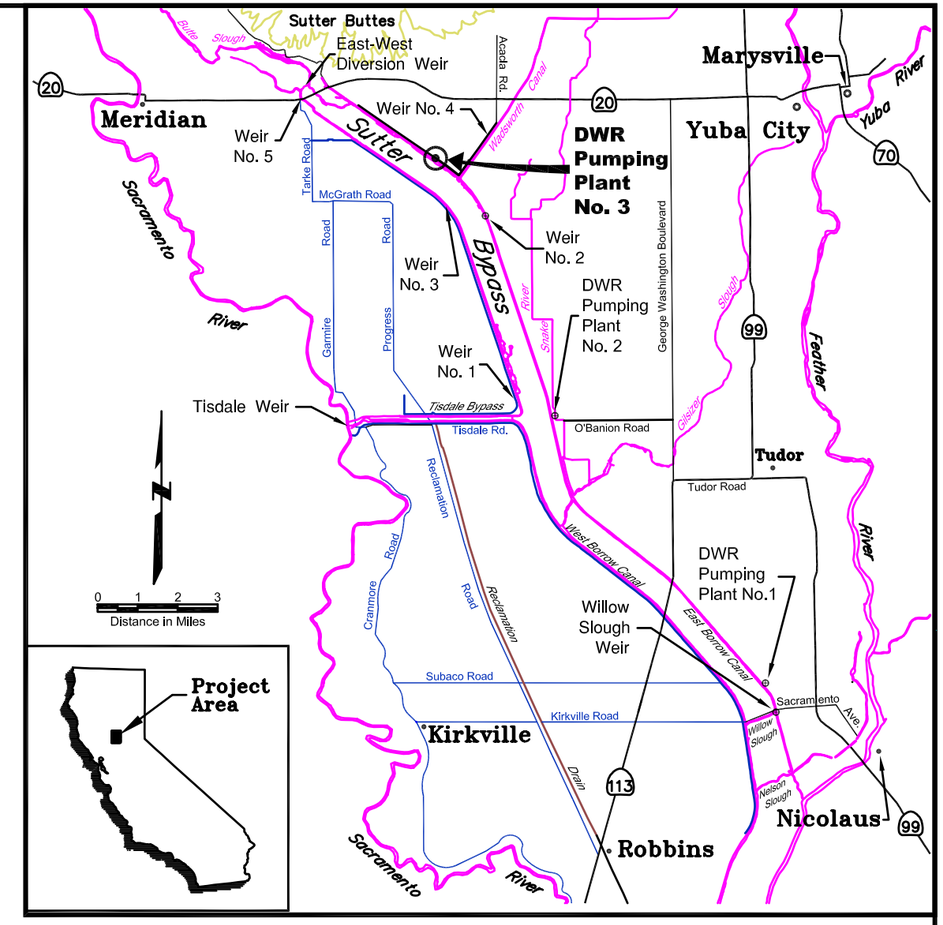

INDEX OF SHEETS

Sheet 21 of 30 – Title Sheet and Area Map
Sheet 22 of 30 – General Plan
Sheet 23 of 30 – Isometric Views
Sheet 24 of 30 – Flat Plate Fish Screen Site Plan
Sheet 25 of 30 – Flat Plate Fish Screen Plan and Elevation
Sheet 26 of 30 – Conical Fish Screen Site Plan
Sheet 27 of 30 – Conical Fish Screen Plan and Sections
Sheet 28 of 30 – Cylindrical Fish Screen Site Plan
Sheet 29 of 30 – Cylindrical Fish Screen Plan and Sections
Sheet 30 of 30 – Fish Screen Details

Note: All Proposed Work Denoted in Upper Case Text

PRELIMINARY
SUBJECT TO REVISION

PUMPING PLANT NO. 3 Sutter Bypass near Yuba City, California	Title Sheet and Area Map	STATE OF CALIFORNIA THE RESOURCES AGENCY DEPARTMENT OF WATER RESOURCES NORTHERN DISTRICT Revision Date: March 6, 2002	Drawing: 3_title_and_loc_maps_1.1.dwg Sheet 21 of 30

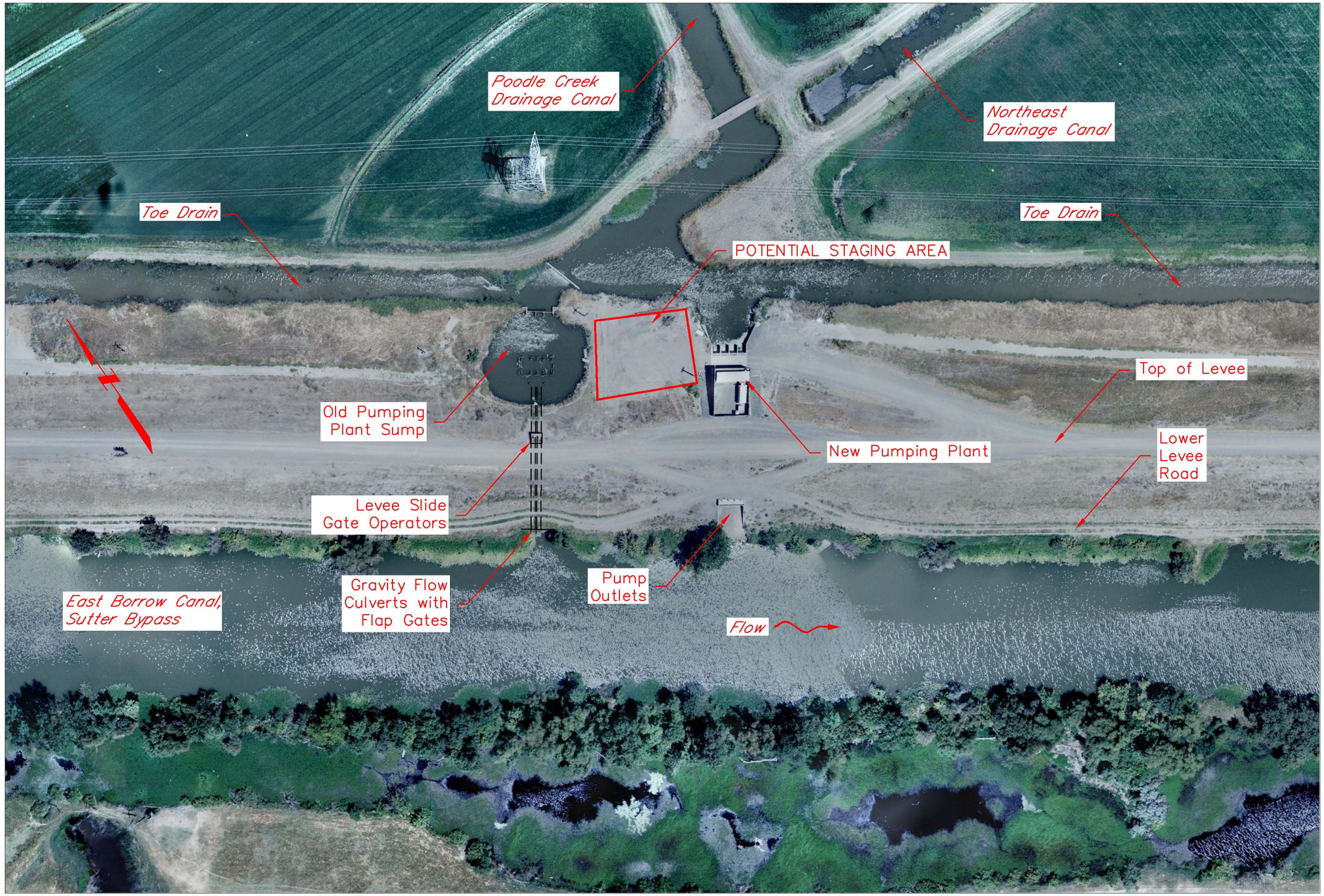

Note:

1) Photograph taken June 30, 2000.

0 100 200

Scale in Feet

PUMPING PLANT NO. 3 Sutter Bypass near Yuba City, California	General Plan	STATE OF CALIFORNIA THE RESOURCES AGENCY DEPARTMENT OF WATER RESOURCES NORTHERN DISTRICT Revision Date: March 18, 2002	Drawing: PP3_topo.dwg Sheet 22 of 30

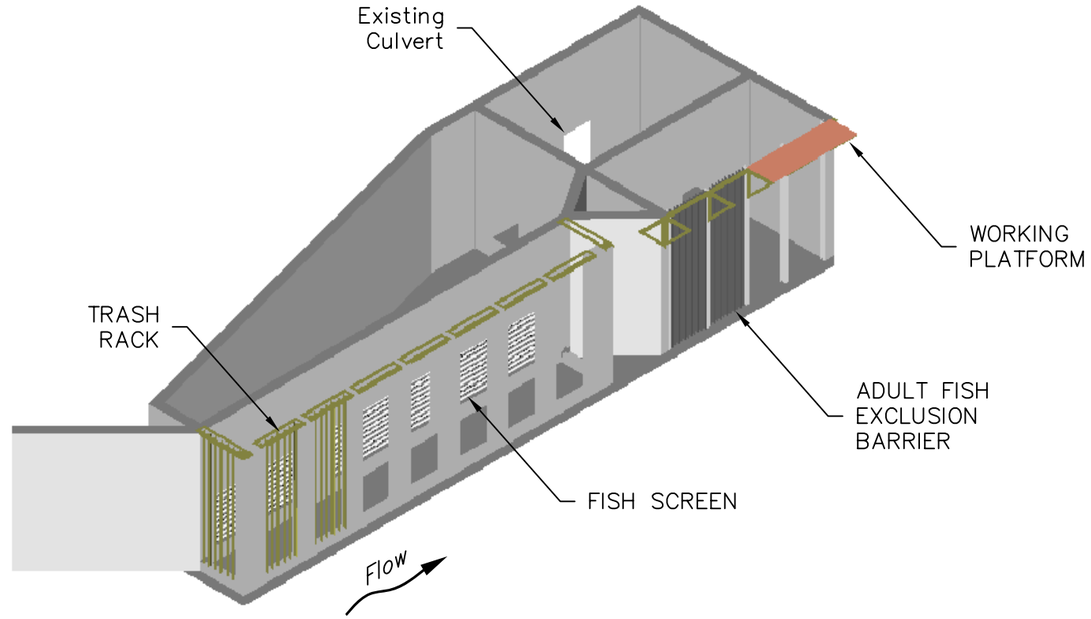

Flat Plate Fish Screen

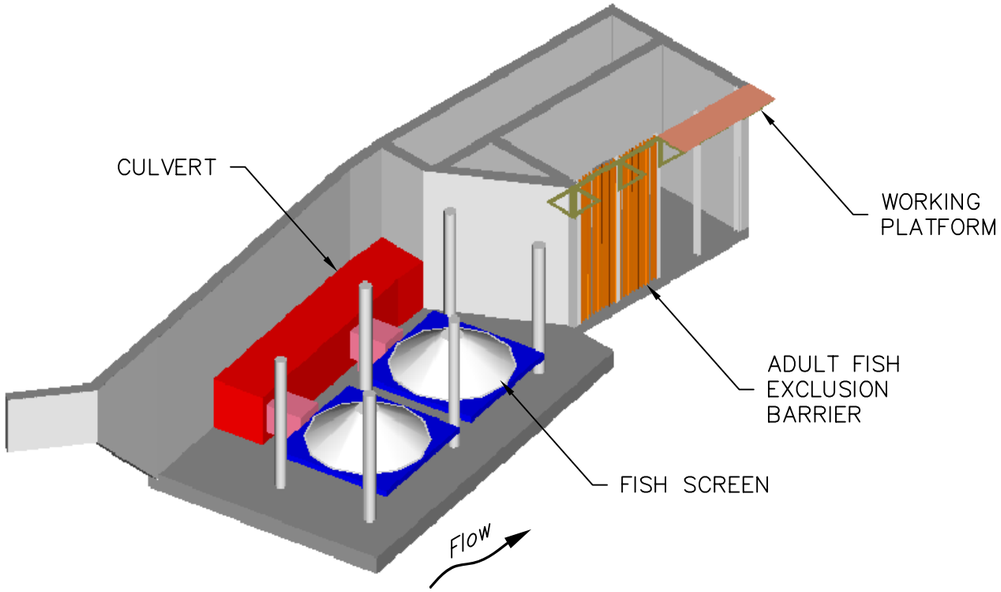

Conical Fish Screen

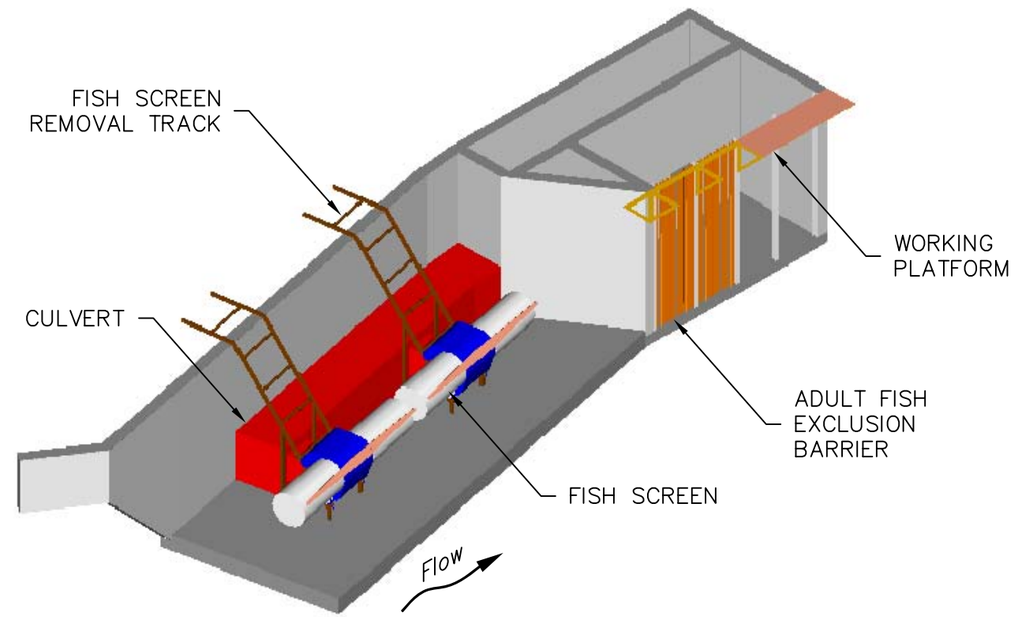

Cylindrical Fish Screen

PUMPING PLANT NO. 3 Sutter Bypass near Yuba City, California	Isometric Views	STATE OF CALIFORNIA THE RESOURCES AGENCY DEPARTMENT OF WATER RESOURCES NORTHERN DISTRICT Revision Date: February 7, 2002	Drawing: Iso_Views.dwg Sheet 23 of 30

Notes:
1) Photograph taken June 30, 2000.
2) Vertical datum NAVD 88, feet.
3) Contour interval = 1 foot.

0 20 40
Scale in Feet

PUMPING PLANT NO. 3 Sutter Bypass near Yuba City, California	Flat Plate Fish Screen Site Plan	STATE OF CALIFORNIA THE RESOURCES AGENCY DEPARTMENT OF WATER RESOURCES NORTHERN DISTRICT Revision Date: March 18, 2002	Drawing: PP3_topo.dwg Sheet 24 of 30

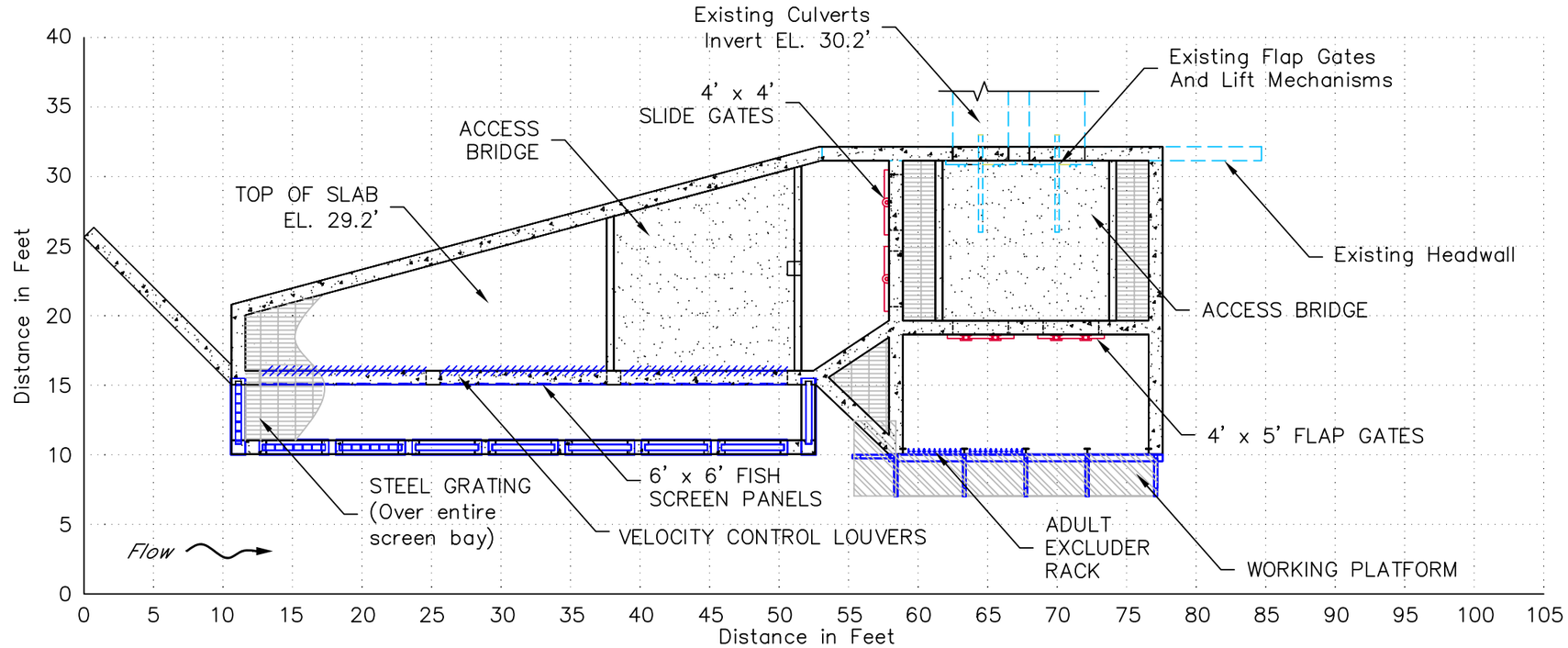

Plan

Scale: 1" = 10'

Notes:
1) Vertical datum NAVD 88, feet.
2) Survey performed July 2000.
3) See Sheet 30 for fish screen detail.
4) Fish screen cleaning mechanism not shown.
5) Footings/sheet-pile cutoff walls not shown.
6) 2 adult excluder sections not shown.
7) 6 trash rack sections not shown.

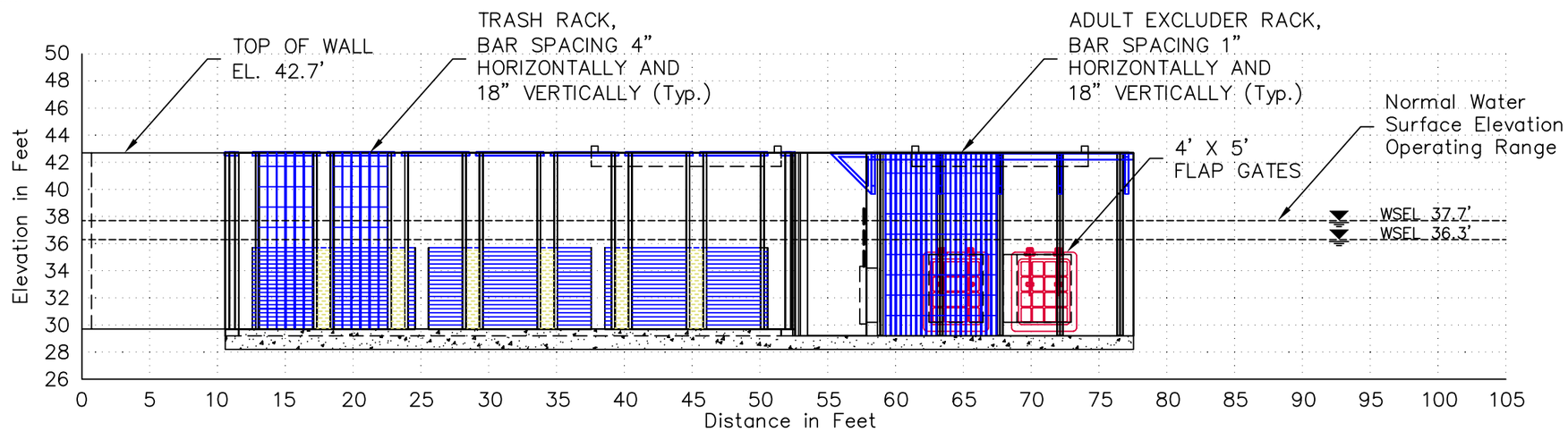

Elevation

Scale: 1" = 10'

PUMPING PLANT NO. 3 Sutter Bypass near Yuba City, California	Flat Plate Fish Screen Plan and Elevation	STATE OF CALIFORNIA THE RESOURCES AGENCY DEPARTMENT OF WATER RESOURCES NORTHERN DISTRICT Revision Date: March 12, 2002	Drawing: Plate_Plan_ and_Profile.dwg Sheet 25 of 30

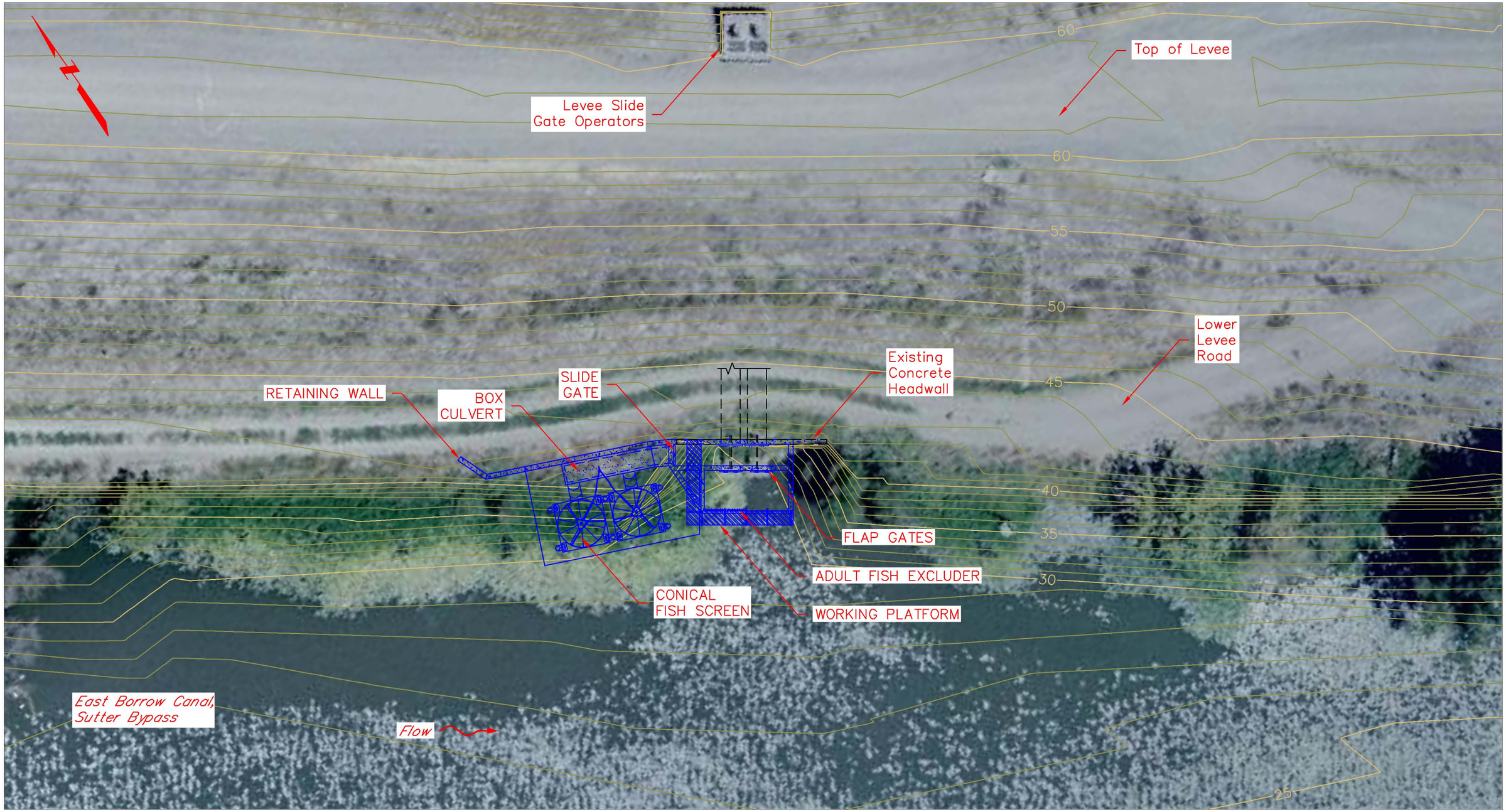

Notes:

1) Photograph taken June 30, 2000.
2) Vertical datum NAVD 88, feet.
3) Contour interval = 1 foot.

0 20 40
Scale in Feet

PUMPING PLANT NO. 3 Sutter Bypass near Yuba City, California	Conical Fish Screen Site Plan	STATE OF CALIFORNIA THE RESOURCES AGENCY DEPARTMENT OF WATER RESOURCES NORTHERN DISTRICT Revision Date: March 18, 2002	Drawing: PP3_topo.dwg Sheet 26 of 30

Notes:
1) Vertical datum NAVD 88, feet.
2) Survey performed July 2000.
3) See Sheet 30 for fish screen detail.
4) Footings/sheet-pile cutoff walls not shown.
5) 2 adult excluder sections not shown.

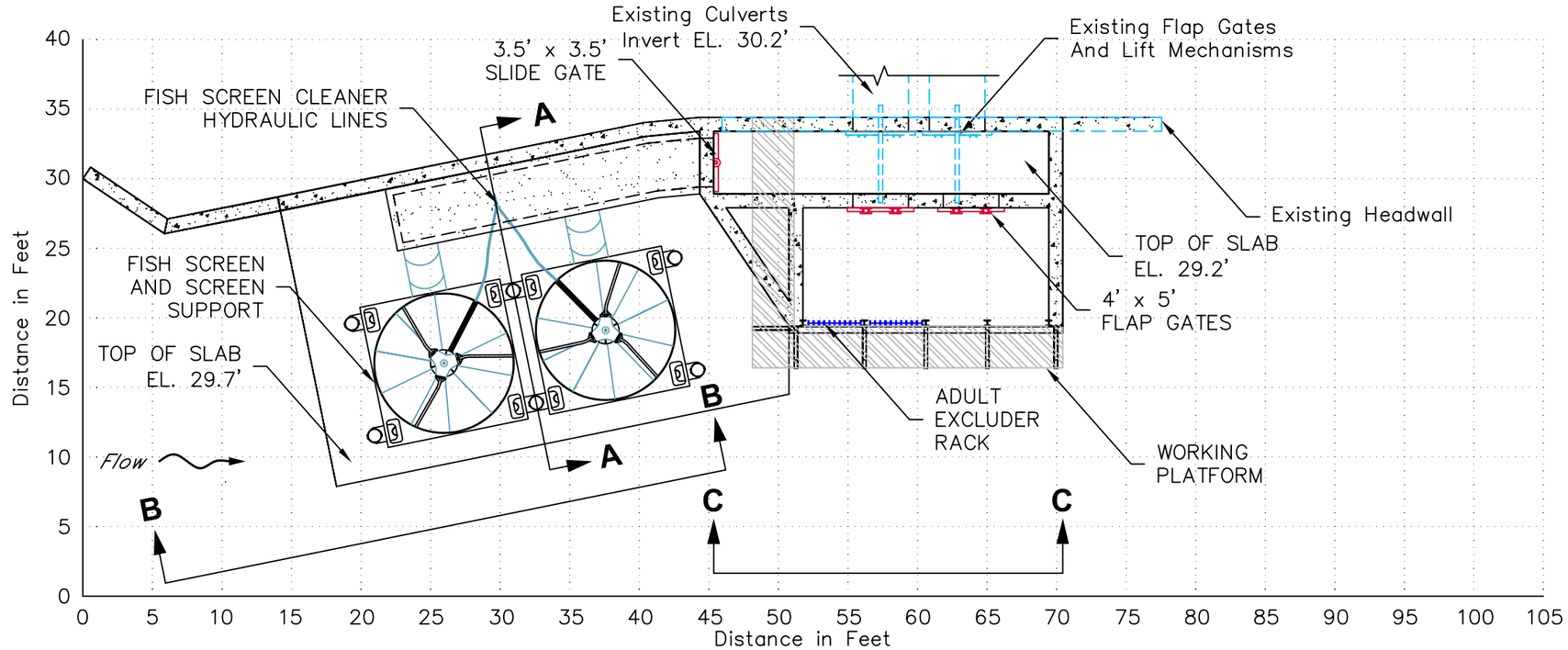

Plan

Scale: 1" = 10'

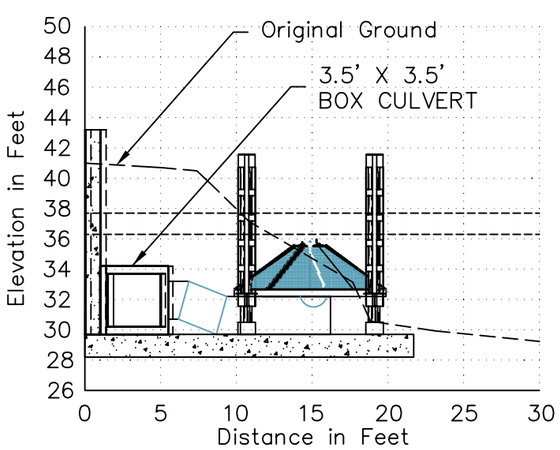

Section A - A

Scale: 1" = 10'

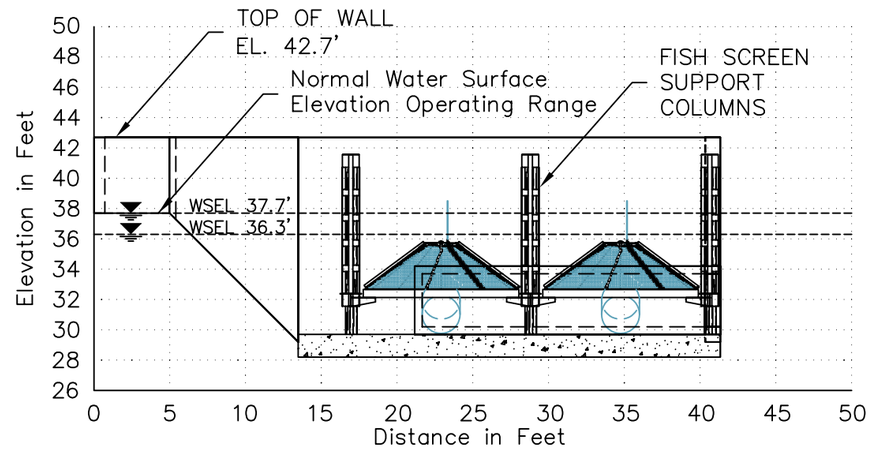

Section B - B

Scale: 1" = 10'

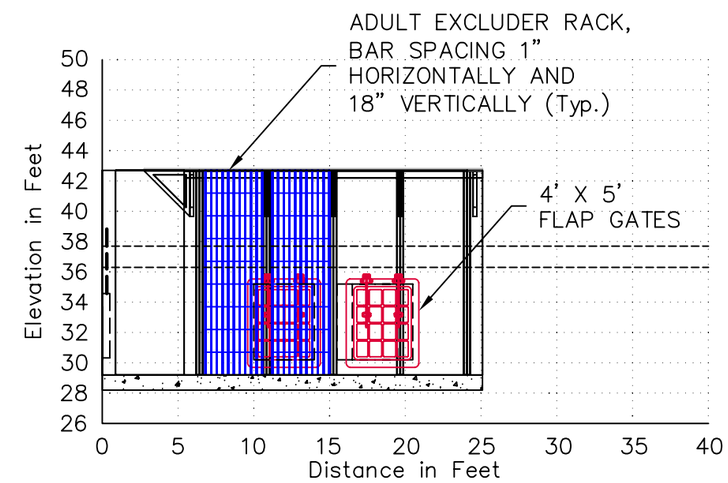

Section C - C

Scale: 1" = 10'

PUMPING PLANT NO. 3 Sutter Bypass near Yuba City, California	Conical Fish Screen Plan and Sections	STATE OF CALIFORNIA THE RESOURCES AGENCY DEPARTMENT OF WATER RESOURCES NORTHERN DISTRICT Revision Date: March 12, 2002	Drawing: Cone_Plan_ and_Profile.dwg Sheet 27 of 30

Notes:

1) Photograph taken June 30, 2000.
2) Vertical datum NAVD 88, feet.
3) Contour interval = 1 foot.

0 20 40
Scale in Feet

PUMPING PLANT NO. 3 Sutter Bypass near Yuba City, California	Cylindrical Fish Screen Site Plan	STATE OF CALIFORNIA THE RESOURCES AGENCY DEPARTMENT OF WATER RESOURCES NORTHERN DISTRICT Revision Date: March 19, 2002	Drawing: PP3_topo.dwg Sheet 28 of 30

Notes:
1) Vertical datum NAVD 88, feet.
2) Survey performed July 2000.
3) See Sheet 30 for fish screen detail.
4) Footings/sheet-pile cutoff walls not shown.
5) 2 adult excluder sections not shown.

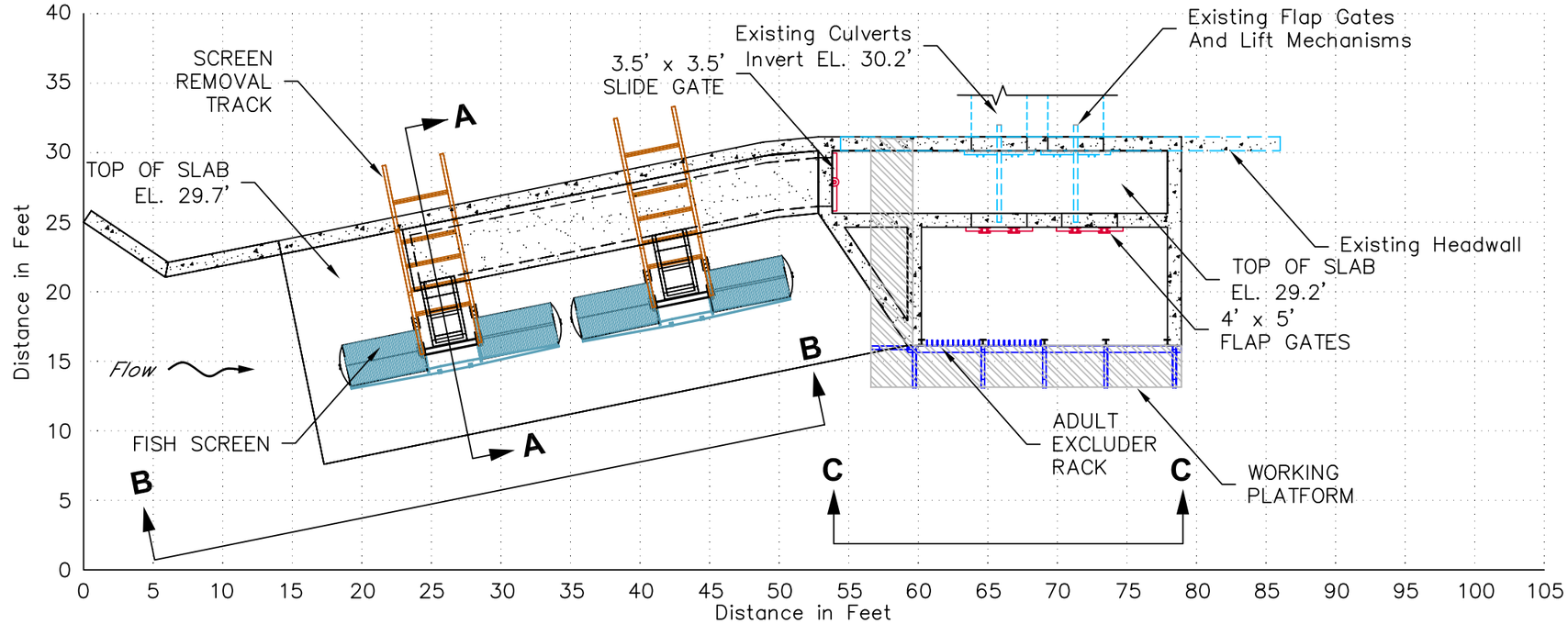

Plan

Scale: 1" = 10'

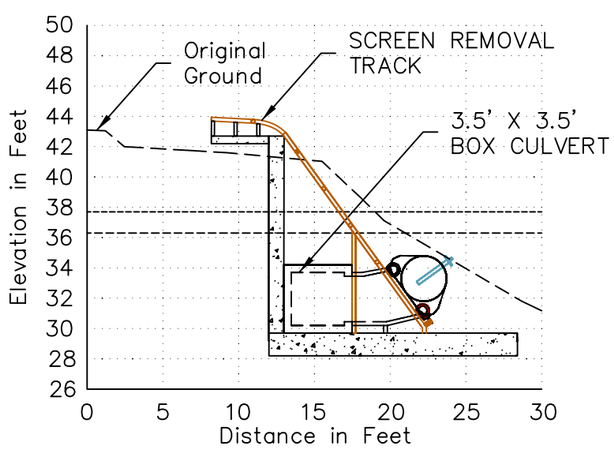

Section A - A

Scale: 1" = 10'

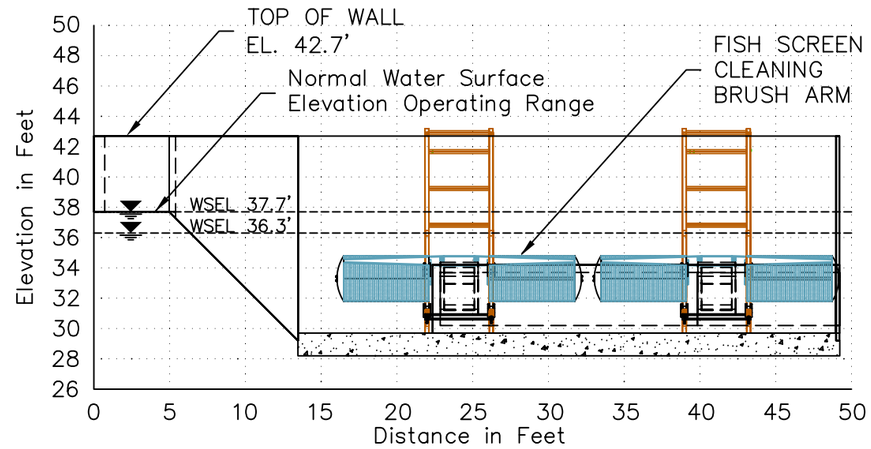

Section B - B

Scale: 1" = 10'

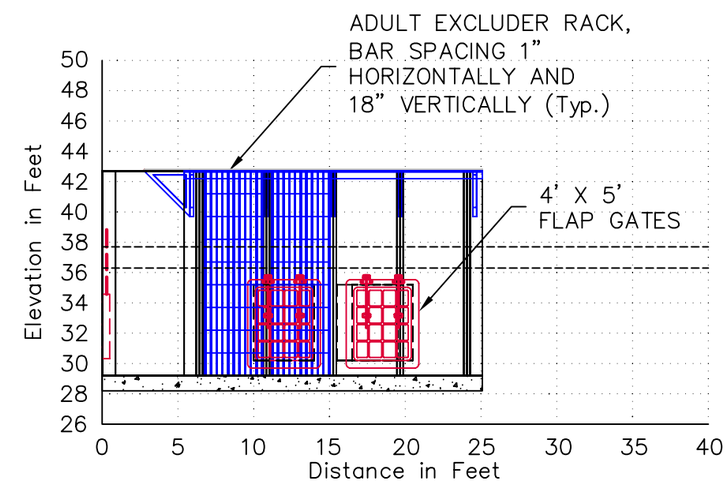

Section C - C

Scale: 1" = 10'

PUMPING PLANT NO. 3 Sutter Bypass near Yuba City, California	Cylindrical Fish Screen Plan and Sections	STATE OF CALIFORNIA THE RESOURCES AGENCY DEPARTMENT OF WATER RESOURCES NORTHERN DISTRICT Revision Date: March 12, 2002	Drawing: Cylinder_Plan_and_Profile.dwg Sheet 29 of 30

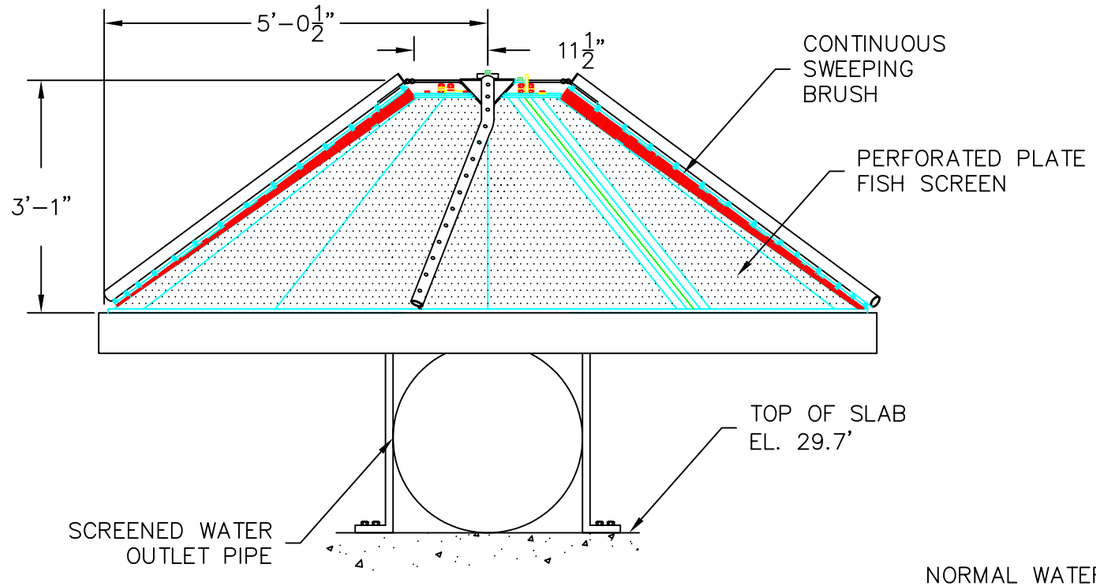

Conical Fish Screen Detail

Scale: 1/2" = 1'

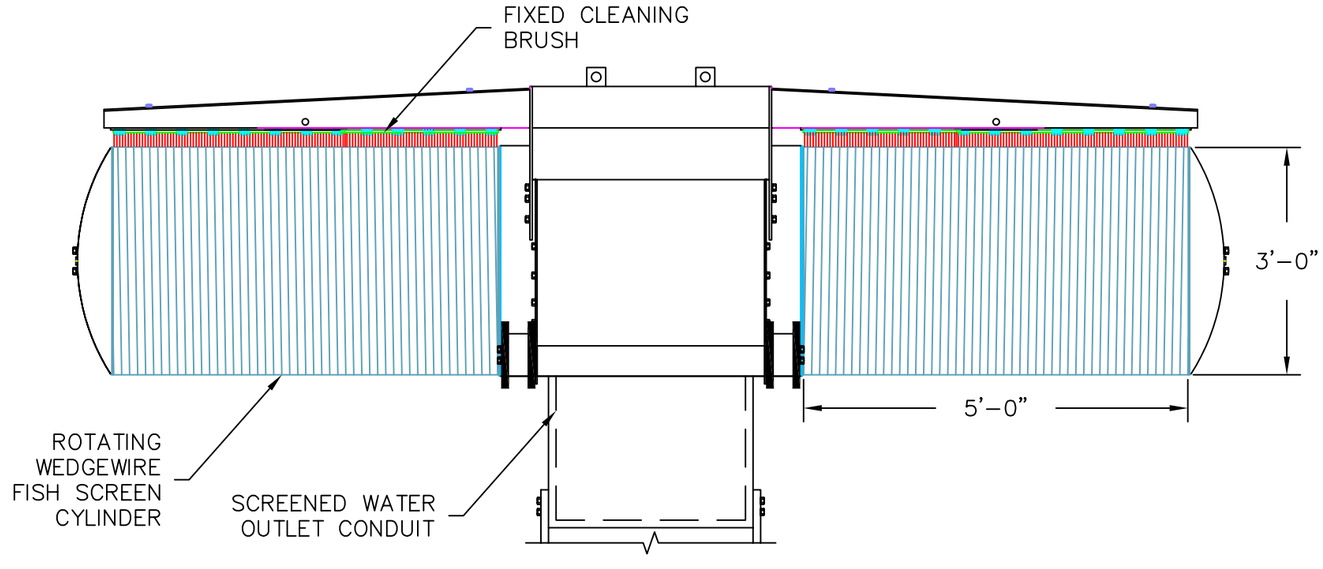

Cylindrical Fish Screen Detail

Scale: 1/2" = 1'

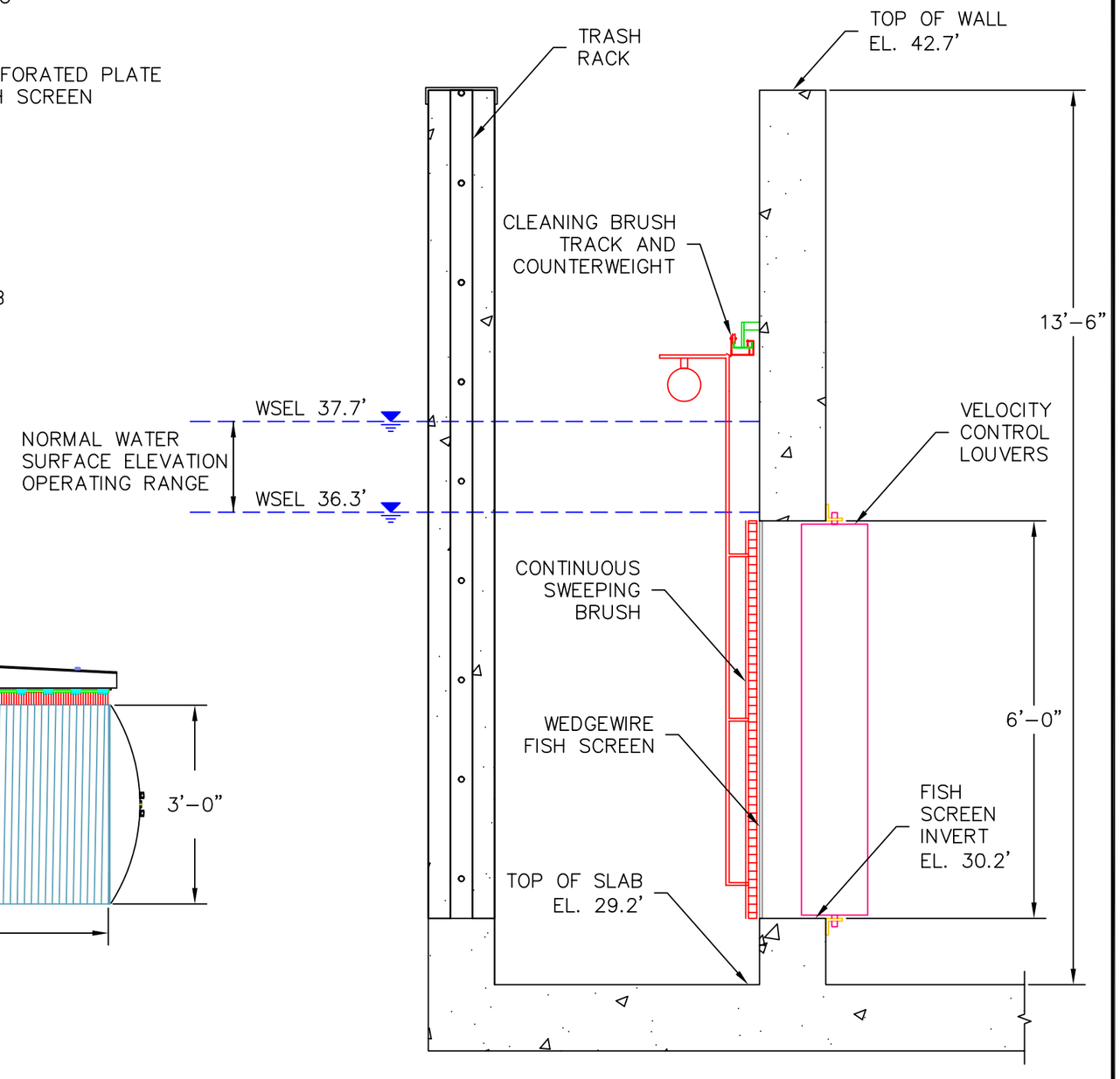

Flat Plate Fish Screen Detail

Scale: 1/2" = 1'

PUMPING PLANT NO. 3 Sutter Bypass near Yuba City, California	Fish Screen Details	STATE OF CALIFORNIA THE RESOURCES AGENCY DEPARTMENT OF WATER RESOURCES NORTHERN DISTRICT Revision Date: February 8, 2002	Drawing: Screen_Sect.dwg Sheet 30 of 30

Appendix A Table of Contents

Meeting Notes: January 5, 2000 by Olen Zirkle A-2
Meeting Notes: May 9, 2001 by Olen Zirkle A-5
Meeting Notes: August 21, 2001 by Olen Zirkle A-9
Meeting Notes: August 21, 2001 Partial Meeting Summary (DWR Project portion) by K. Dossey A-13
Letter From DWR to USFWS Re: Operation and Maintenance of Proposed Fish Screens A-15
Letter From MBK Engineers to Ducks Unlimited Re: Water Rights and Estimated Peak Demand Flows..... A-17
Letter From ND to Sutter County Clerk/Recorder Re: Notice of Exemption for Geologic Exploration A-20
Letter From ND to The Reclamation Board Re: Permission to Conduct Geologic Exploration A-24

LOWER BUTTE CREEK PROJECT
Sutter Bypass East-Side
DWR Pumping Plants Meeting
January 5, 2000

Attendees: Paul Ward – CDFG, Randy Beckwith – DWR, John Icanberry – FWS/AFRP, Art Winslow – DWR, Steve Thomas – NMFS, Curtis Anderson – DWR, Joel Miller – FWS/CVPIA, Mike Peters FWS/Sutter Refuge, Paul Russell, - Sutter Extension WD, Jim Coe – DWR, Fred Jurick –CDFG, Kevin Dossey – DWR, Elena Slagle – CWA, Dick Akin – Akin Ranch, Al Montna – Montna Farms, Dan Keppen NCWA, Nicole Van Vleck – Montna Farms, Olen Zirkle – DU.

Olen Zirkle opened the meeting with self introductions. He then gave a brief history of the Lower Butte Creek Project and specifically the East Side of Sutter Bypass. He noted that the stakeholders on the east side were pursuing two approaches to compliance with fish passage requirements. They were working with both state and federal regulatory agencies on developing a basis for an HCP/Programmatic 2081 Permit including an incidental take permit for unscreened small pumps. On a second front, they were continuing to develop data for screening their small pumps. This meeting in furtherance of that effort was to discuss issues relating to the three large DWR pumping plants which supply water to stakeholders' small pumps outside of the Sutter Bypass levee.

Nicole Van Vleck, Montna Farms, expressed concerns of the local landowners/diverters. She said they want the fish screening project to be a "water rights neutral" process. They also want to be able to keep farming, operations and maintenance as they are currently.

Art Winslow, DWR Project Representative, gave a history of the DWR Pumping Plants. He noted that the pumps were installed in 1940 and were operated for flood control until 1982 at which time they were decommissioned and the bowls removed. Remaining were the three below level 36" pipes at each site which delivered gravity flow flood water into the bypass under certain head conditions and delivered irrigation water outside the bypass during the crop year. In recognition of the irrigation needs, the landowners outside the bypass were issued licenses insuring them the right to pump the gravity flow water. Art pointed out that at least two pipes at each pumping plant served a dual purpose of flowing flood water into the bypass and irrigation water out of the bypass.

Jim Coe, DWR Chief, Flood Control System Integration Section, expanded on DWR's concerns for the pumps. He stated that the pumps, although decommissioned, still divert flood water into the Sutter Bypass during the early winter and late spring when flows are low and too small for the main flood control pumps. He was concerned that fish screens would impair the flood control function of these structures and that the screens might cause a problem with debris. Coe said that the Sutter Yard works

closely with the landowners and adjust the screw gates at each of the three pumps depending on landowner demand and operational requirements for elevations within the bypass. He said that there were no meters on the pumps and that one to two gates were open at each site during the irrigation pumping season.

A general discussion on DWR's role followed.

- Total demand outside the bypass is estimated to approach 100 cfs
- DWR's position is that O&M on screens would be landowners obligation
- Dick Akin pointed out that the landowners had no mechanism to collect the pro-rata cost of operating the screens
- It was pointed out that flood flows would create an attractant flow for adult salmon and this would be DWR's responsibility. How would DWR handle the O&M on this portion of the screening cost
- Currently, landowners do not operate the pumping plant facilities. Any adjustment is done by the Sutter Yard.
- There needs to be more research done on flows both in and out of the bypass through the pumping plants
- The landowners wanted to know what the long-term cost of O&M. It was pointed out that the screens would be designed for a 50 year life.
- The landowners were concerned about catastrophic loss of the screens due to large debris. Paul Ward pointed out that the current operating agreements now in force indemnified landowners from the cost.

Paul Ward, CDFG Project Representative, was asked to discuss the fisheries issues surrounding the pumping plants and the east side of the Sutter Bypass. He said that the introduction of juveniles to the Sutter Bypass, including the east side could not be controlled due to incidental flooding. Because the bypass also takes Sacramento River water, all of the listed fish species are present in the bypass at any given time. Dick Akin questioned Paul about the 45 cfs fish water. His concern was that in low-flow years that landowner would have to guarantee the 45 cfs flow and absorb all of the channel losses. Paul stated that the 45 cfs was new water and would not impact the existing flows. When questioned about shelf life and protection from further screening requirements, Paul stated that it was Department procedure to not require additional screening until all unscreened diversions had been screened. Under current conditions, this would be a very long time.

Joel Miller, Refuge and Wildlife Program Specialist for Fish & Wildlife Service/CVPIA, talked about refuge water supply and how it would impact the east side of the Sutter Bypass. He stated that the Bureau of Reclamation had an obligation to supply the refuges with their historical supply of water and that contracts to guarantee that supply were now being negotiated. Specifically, negotiations were currently underway with Sutter Extension Water District on bringing approximately 60 cfs to the Sutter Refuge through Sutter Extension's system. It was Joel's opinion that the delivery, if agreement was reached with Sutter Extension, would not have much of an effect on the DWR pumping plants.

Curtis Anderson, Senior Engineer for the DWR Northern District, said he was concerned about the debris problem. As the engineer in charge of the design project, he was concerned about getting needed assistance from landowners. He questioned whether pumping plants 1 &2 could be combined. The landowners felt that this was probably unworkable, but they agreed to look at it. Curtis offered to research surveys of the area and to conduct topographic surveys and analyze the feasibility of combining the diversions, all as part of the preliminary investigation.

Fred Jurick, funding coordinator for CDFG, talked about various funding sources for the screening project design. He said there were two pots of state funds. The 4-Pumps funds came from mitigation fees charged for the state pumps in the Delta and the Tracy Pumps funds come from the federal pumps. Currently there is $200,000 available from the Tracy Pumps fund which can be used for preliminary design. He would need a scope of work and budget to start the funding process. Curtis Anderson agreed to get a scope of work and budget to him by the end of January. Olen Zirkle, asked that Curtis review the documents with the landowners and get their input before sending a final product to Jurick. Jurick went on to say that a certain amount of O&M can be built into a funding request and that it had been done in other instances.

The meeting was adjourned with no further comments or concerns.

Action Items:

1. Art Winslow will take the issue of adult fish barriers back to DWR for further discussion.
2. Paul Ward will get latest fish count and fish migration information for the Sutter Bypass to Dan Keppen.
3. Curtis Anderson to prepare a scope of work and budget with input from landowners and get it to Fred Jurick by January 31, 2000.

Lower Butte Creek Project

Department of Water Resources Pumping Plants Fish Screening Project
Sutter Bypass East Borrow Canal
May 9, 2001 Stakeholder Meeting
2:00 pm, Montna Farms, Dingville, CA

AGENDA

- Introductions and Handouts
- Project Background and Need for Fish Screens (Ward or Zirkle)
- Overview of Work-to-Date by DWR Northern District (Dossey)
- O&M Agreement with DWR Division of Flood Management (Winslow)
- General Design Considerations and Alternatives (Dossey)
- Water Demands for Fish Screen Design Flows (Kienlen)
- Operational and Functional Design Parameters at Each Site (Connor, Kennedy, Snodgrass)
- Discussion of Other Design Considerations and Operational Needs
- Estimated Work Schedule
- Set Next Meeting Date

DEPARTMENT OF WATER RESOURCES PUMPING PLANT MEETING
Lower Butte Creek/Sutter Bypass East Side

Meeting Minutes

MEETING DATE: May 9, 2001

MEETING TIME: 2:00 p.m.

LOCATION: Dingville, CA

ATTENDEES:

Steve Thomas, NMFS
Randy Beckwith, DWR
Nancy Snodgrass, DWR
Scott Kennedy, DWR
John Oji, Oji Bros. Farms
Paul Ward, DFG
Jason Cooper, DWR
Kevin Dossey, DWR
Gary Kienlen, MBK Engineers
George Heise, CDFG
Curtis Anderson, DWR
Teresa Connor, DWR
David Nall, Farmer
Dave Rose, DFG
John Icanberry, USFWS-AFRP
Dick Akin, Water Users Assoc.
Ken Dickerson, DWR
Olen Zirkle, DU
Art Winslow, DWR

NOTE: The following Flood Management, Department of Water Resource attendees joined the meeting already in progress.

Keith Swanson, DWR
Stein Buer, DWR
Rod Mayer, DWR

ACTION ITEMS:

1. Department of Water Resources to measure the flow at Pumping Plant (PP) 2 to determine flow velocity.

2. MBK to revise demand at PP 1 & 2.

3. Department of Water Resources to finalize plans for each PP by July 2001.

DECISIONS MADE:

1. PP 1 & 3 will need to be screened to final max and email as determined by MBK analysis.

2. PP #2 needs more study before any decision can be made of screen size.

MEETING SUMMARY AND DISCUSSION

Kevin Dossey opened the meeting by welcoming the attendees to the meeting.

Attendees then introduced themselves and gave a brief background on what their involvement with the project has been.

Minutes from the May 5, 2000 meeting were handed out to update meeting participation on PP issues.

Dick Akin pointed out that the minutes should reflect that DWR PP's drain Yuba City, as well as adjacent agricultural land. Olen Zirkle talked about the history of the Lower Butte Creek project and the issues on the east side of the Sutter Bypass.

Kevin Dossey gave a brief history of the PP effort:

a. Arranged for funding from Tracy Mitigation for preliminary design
b. Took aerial photo of the three sites
c. Developed conceptual plan based on flow data from the Sutter Yard and MBK Engineer. (Attached)

Art Winslow talked about DWR's commitment to operate and maintain the screen. He handed out a letter to Wayne White illustrating DWR's commitment.

Kevin Dossey described project components:

1. Adult exclusive barrier
2. Several screens were explored
    a. Flat Plate
    b. Cylindrical
    c. Conical
3. DWR is leaning toward flat plate screens with two different cleaning systems
    a. Air Burst – (not good in high sediment and algae conditions)
    b. Brush systems
4. Screen Consideration
    a. Access
    b. Cleaning
    c. 2-Way Flow
    d. Vandalism
    e. Flooding
5. Design flow
    a. Head differential? (Not limiting)
    b. PP Structure (No limiting)

c. Pumping demand outside levee still undetermined

Gary Keinlen discussed flow demand by PP. (See handout)

Teresa Connor went over existing condition for PP #1 and showed the aerial photo. The flow was estimated to be 70-130 cfs based on a head differential of .05 -.1 ft. She said that DWR is measuring stage on a daily basis and the DWR Northern District is measuring velocity when staff is available to drive from Red Bluff.

Scott Kennedy talked about PP #2. He said that there was very little flow through this plant toward land-side (4 days in 3 years.) Scott questioned the need for screens due to low incidence of negative flow. The conceptual plan includes a 50 cfs screen using one culvert.

The group discussed other options:

a. Close gate for flow days and drain water from #1.
b. Land owner could agree to shutting off water
c. Could use passive screen with no cleaners
d. Atkin asked that DWR consider Sutter Extension membership and supplying water from that source.

PP #3 – Nancy Snodgrass

a. PP certain two 4-ft. x 5-ft. culverts
b. Design flow = 56 CFS
c. Fish Screen = 5.5’ x 50'
d. Chart shows flat water condition but flow probably exists

Other items discussed within the group included maintenance and safety issues. They are a big problem at each site.

The meeting was adjourned.

LOWER BUTTE CREEK PROJECT
Agency Update on Sutter Bypass Projects
Ducks Unlimited Office, Rancho Cordova, CA
9:00 am, August 21, 2001

AGENDA

I. Introductions

II. Additions to Agenda

III. Reviews of DWR Pumping Plant List
- Opinion Letter - MBK
- List of Authorized Diverters

IV. Review of Sutter Bypass East Side Project
- Scope of Work -- MOA

V. Review of Scope of Work and Budgets for West Side Projects
- NFWF Contract – E-W Weir, Weir #5, Giusti/Weir #1 Alternates
- Bureau of Reclamation Contract – Weir #3
- BA/BO
- IS/EA

VI. Review of Weir #1 Study
- Review of Montgomery Watson Scope of Work
- Status Report on Project
- Status Report on Amaral Ranch Water Purchase/Easement Proposal

VII. Review of Proposed CALFED 2002 PSP Projects
- Butte Sink/White Mallard Status Report (Capriola)
- Butte Sink Construction Budget
- White Mallard Construction Budget
- Discussion Of Sub-project Ranking

LOWER BUTTE CREEK PROJECT
Agency Update on Sutter Bypass Projects

Meeting Minutes

MEETING DATE: August 21, 2001

MEETING TIME: 9:00a.m.

LOCATION: Ducks Unlimited Office, Rancho Cordova, CA

ATTENDEES:

Paul Ward
Rob Capriola
Olen Zirkle
John Icanberry
Steve Thomas
Linda Rodgers
Art Winslow
Buford Holt
Kevin Dossey

ACTION ITEMS:

4. Olen Zirkle will develop the ESA Approach Flow Chart and distribute to the group

5. Olen will forward a copy of the Sutter Bypass BA to NMFS Sacramento office

6. Olen will call Mike Acietuno and get a biologist involved in the ESA Approach

7. Rob Capriola will contact Obermeyer to get an example of a successful air bladder operated gate

8. Rob will convene a meeting on the Butte Sink management plan

DECISIONS MADE

1. Department of Water Resources (DWR) will proceed with the Pumping Plant design subject to the MBK list

2. Fish Flows will be placed on the ESA Approach list of issues for the Sutter Bypass MOA in lieu of CDFG listing water rights on the MBK list as significant impact on the Pumping Plant CEQA Document

MEETING SUMMARY AND DISCUSSION

Introductions were made of all the attendees. Olen Zirkle asked for additions to the agenda. Paul Ward requested that New Diversions be discussed under Agenda Item III.

Olen opened the discussion of Sutter Bypass DWR Pumping Plant Screen in Project by passing out a letter and list from MBK Engineering. He stated that MBK concluded that the diverters named on the list had a right to divert through the DWR Pumping Plants and that based on earlier Water Board findings that the right extended to the East Borrow Channel of the Sutter Bypass. Paul objected to the conclusion stating that he had not had seen the letter before the meeting and that he felt that the diverters in question did not have a right to the East Borrow Channel flows. He said there is a CEQA Impact and that he will have to note a finding of significant impact in the CEQA document. He suggests a Water Board ruling as a compromise.

Olen stated that the stakeholders would not agree to a Water Board hearing and that they were not be willing to stay in the process if any further discussions of water rights took place. Olen reiterated that the Steering Committee in its original meetings and letters to stakeholders indicated that water rights would not be an issue. Paul Ward however, reiterated that fish passage facilities funded by public dollars would only be constructed to accommodate legal water rights. This stipulation was specified to the landowners at the beginning of the process, and all previously constructed projects have held to that requirement.

Buford Holt suggested a settlement using state or federal water as trade, specifically using Level 4 refuge water supply as fish flows. He suggested using the MOA process to work through water rights and flow issues.

Paul Ward further noted that applications are now at the State Board for winter flooding extensions for existing permits along the east side of the Sutter Bypass. He said that he would have to protest these new applications. Olen Zirkle pointed out that these applications covered the right to winter flood rice, which was important to waterfowl in the area. He further noted that this area of the Central Valley was deficient in winter waterfowl habitat and the loss of this type of habitat would be very detrimental.

Olen discussed ESA Approach noting that the contracts with the Bureau of Reclamation and Jones & Stokes had been signed. Paul said that it will take more time than envisioned because of legal review on the CDFG side and because the whole process is precedent setting. Olen agreed to distribute a flow chart of the process to attendees.

Olen went over Weir #1 status including the funding for the project. He discussed the three alternatives including removal of Weir # 1, upgrading Weir #1 and replacing Weir #1 with rock groins and a cutoff wall. Olen said Montgomery Watson was working on boring samples and would have a decision by the end of September.

Rob discussed the Butte Sink Project:

- Bifurcation project will start next week to finish the high flow bypass, bring in electric power and upgrade the road
- BA is progressing on the Butte Sink water control modification projects. The BA is under final review at Jones & Stokes and will be ready for administrative review in the near future
- Cooperative Management Plan for the Butte Sink is in its final draft form and will be ready for public review in the near future
- The operations agreement is nearing completion, meanwhile, the partners are working off of the old agreement for day-to-day management

Paul said the stream flow gauges are ready to go in pending the signing of the Bifurcation Operations Agreement. One issue is the review of the Schorr easement to determine if it allows for the gauges.

Paul said CDFG is still waiting on the Cooperative Management Agreement on Butte Sink from Jones & Stokes. He said that operation of the Butte Sink, as a flow through system is a CEQA issue because of past operations that stranded fish. He also said there was a cumulative issue on the operation of the water control structures noting that the operators of the North Weir will have to coordinate with the operators of the Morton Weir to assure water delivery to the southern part of the Sink.

Jones and Stokes had offered to put the operations plans for the various weirs into the BA. In that example, the BO would have the operations plan as a requirement on the owners. Paul stated that the BO has no teeth if the species in de-listed. He felt that the project needs a document that goes beyond listing issue.

Rob closed his report on the Butte Sink by noting the Butte Sink Waterfowl Association is still working on the formation of a district. If they can get a district formed, some of the issues of operation will be resolved.

Olen than gave a brief update on funding and handed out a list ranking the various weir upgrades being proposed to CALFED and CVPIA for construction funding. He said that there would be two CALFED grants, Butte Sink and White Mallard. Paul reiterated his concern that the weirs listed as priority #1 be completed first if funds were short. He requested that the proposal note the priority listing and that the two proposals were linked with all priority #1 structures be funded before any other structures were funded regardless of project.

The meeting was adjourned.

LOWER BUTTE CREEK PROJECT

Agency Update on Sutter Bypass Projects, August 21, 2000

DRAFT

Partial Meeting Summary by K. Dossey (DWR Project portion):

Attendees:

Olen Zirkle - Ducks Unlimited
Linda Rodgers - Ducks Unlimited
Paul Ward - California Dept. of Fish and Game
Art Winslow - California Dept. of Water Resources, Executive Offices
Kevin Dossey - California Dept. of Water Resources, Northern District
John Icanberry - United States Fish and Wildlife Service
Steve Thomas - National Marine Fisheries Service
Buford Holt - United States Bureau of Reclamation

Olen Zirkle distributed the "official" MBK Engineers' letter, dated August 14, 2001 and signed by Gary Kienlen, that explained the basis for the determination of potential demand flows for use in the designs of fish screens at the DWR Pumping Plants along the Sutter Bypass East Borrow Canal. The estimated peak demand flows listed by MBK are the same as were distributed on 5/25/01. The letter stated MBK's opinion that the State Water Resources Control Board (SWRCB) Order 79-22 supports the claim that the drains and creeks east of the Sutter Bypass levee, which are named as the source of water for most of the diverters' water rights, and the Sutter Bypass East Borrow Canal constitute a "common supply". Their legal counsel supports that opinion.

Paul Ward said he is uncomfortable with the MBK numbers and believes that most of the SWRCB license holders listed by MBK do not have a right to divert water from the EBC, but only from the drain water originating outside of the Sutter Bypass. Olen stated that the goal of this project is to prevent the loss of fish from the Lower Butte Creek system, and that everyone agreed up-front that water rights would not be an issue. Art Winslow, DWR representative on the Lower Butte Creek Steering Committee, said DWR pursued the legality at one point, but did not rule on it because it is an SWRCB issue. He said DWR counsel and management agree with the SWRCB Order and that the water has been diverted through the pumping plants for a long time. Therefore, DWR will not cut off the diverters.

Paul suggested that setting up gaging stations to monitor flows and actual water diversion quantities may be a logical next step for this project. Kevin Dossey pointed out that a few years of monitoring flows may not lead to a definitive maximum demand flow. Olen said monitoring will just delay the project, and could lead to the "take" of listed anadromous fish, for which DWR would be responsible. Paul said the water rights issue should be addressed in the CEQA document. And he said it is likely that DFG would protest the CEQA document because constructing fish screens sized for

potentially “illegal” diversion of water from the stream system, which consequently harms fish, is not acceptable. Protest of the CEQA documents by DFG would likely result in the need for a full EIS/EIR before construction of the project could occur.

Further discussion led to a suggestion by Buford Holt that we should move forward without necessarily agreeing with the diversion quantity. John Icanberry suggested that a cooperative agreement be developed that would specify a minimum flow remain in the system below the diversions. Paul said an agreement would need to specify that at least 40 cfs would always be flowing at the Willow Slough gage, downstream of the pumping plants, from October through June. It was also suggested that any MOA should specify sequencing of water use to minimize the instantaneous peak demand flows. Olen said that may not be possible because when farmers are ready for water, they “need it now”. However, he thought that as long as their water rights are not protested, they would be reasonable and continue to leave a minimum flow in the system, and agree to an MOA.

DWR’s contract with the DFG for completing preliminary designs has already been extended to March 01, 2002. Based on the discussions at the meeting and further discussion with Art Winslow, DWR engineers will proceed with preliminary designs of the fish screens. However, this does not preclude further investigation by others of the legitimacy of water rights or investigation of actual water usage.

Mr. Wayne White, Field Supervisor
U.S. Fish and Wildlife Service
2800 Cottage Way
Sacramento, California 95825-1846

Dear Mr. White:

This letter responds to the verbal request of the Steering Committee of the Lower Butte Creek Project for the Department of Water Resources' continued assurance that it will operate and maintain fish screens to be constructed on the three State pumping plants in the Sutter Bypass. As you know, the Lower Butte Creek Project's objective is to improve fish passage in the channels of Butte Creek, Butte Slough, and the East and West Borrow Channels of the Sutter Bypass. These channels are important for the migration of both adults and juveniles to and from the upper reaches of Butte Creek – an important habitat for steelhead and the spring- and fall-run of Chinook salmon. In addition, recent sampling has found winter-run Chinook salmon in the borrow channels of the bypass. These winter-run Chinook, which were marked at the Livingston Stone Hatchery near the base of Shasta Dam and released near Redding, entered the bypass from river overflows.

The Department is a stakeholder in the East Borrow Channel because the State owns and operates pumping plants at three locations along the east levee of the Sutter Bypass. There are two plants at each site. The newer plants, built around 1980, pump their discharge up and over the levee while the older pumping plants, built in the 1950s, utilize horizontal pipes that pass beneath the levees. At times, when water levels are low in the bypass, water can flow by gravity through the pipes of the older plants into the bypass. Conversely, when bypass water levels are higher than in the drainage canal, water can flow from the bypass through the gravity pipes to irrigation and drainage canals outside the bypass. Because the pipes associated with the old plants are unscreened, fish (including listed endangered species) can escape the bypass through them. Therefore, it is important to install, operate, and maintain efficient and reliable fish screens on these pipes to protect these fish.

The estimated cost to operate and maintain the proposed fish screens is $20,000 per year. Based on this cost estimate, the Department will operate and maintain these fish screens, once they are installed on the pipes of the three older pumping plants. The Department will also be pleased to work with you to help identify the appropriate funding source for replacement of the screens at the end of their useful life.

The Department is committed to improving fish passage in the Butte Creek system. We want to see this stream system remain a strong and reliable habitat for steelhead and spring- and fall-run Chinook salmon.

The Steering Committee and others involved in the Lower Butte Creek Project are to be commended for the important progress made to date. This project will stand out for its accomplishments.

Sincerely,

Jonas Minton
Deputy Director

Wayne White letter JMinton
AWinslow:Ramona Malinowski
Spell checked 03/13/01

MBK ENGINEERS
Water Resources • Flood Control • Water Rights

RECEIVED
AUG 15 2001
By

Joseph D. Countryman, P.E.
Gilbert Cosio, Jr., P.E.
Marc Van Camp, P.E.

Angus Norman Murray
1913 - 1985

Consultants:
Joseph I. Burns, P.E.
Donald E. Kienlen, P.E.

August 13, 2001

Mr. Olen Zirkle
Ducks Unlimited, Inc.
3074 Gold Canal Dr.
Rancho Cordova, CA 95670-6116

Dear Mr. Zirkle,

In accordance with your request, we have reviewed the water rights pertaining to the lands east of the Sutter Bypass which utilize the drains leading to the three Department of Water Resources (DWR) pumping plants on the East Borrow Pit. The purpose of our review was to determine the rights of the water users to divert water from the various channels and drains which lead to the DWR pumping plants and to estimate the water requirements of these water users. Our review included researching the files at the Division of Water Rights as well as meeting with individual land holders and water users. Attached is a table identifying the water right licenses and permits which apply to these lands.

Based on our review of the licenses and permits, it is our opinion that the holders of the water rights listed on the attached table may divert water from the drains and channels which feed the DWR pumping plants. Further, it is our opinion these rights apply not only to water flowing toward the pumping plants but also to water which, due to hydrological conditions, flows into these channels from the East Borrow Pit. This opinion is based on a review of the various licenses and the California Water Code and is supported by State Water Resources Control Board (SWRCB) Order WR 79-22. Order WR 79-22 determined that Poodle Creek and the East Borrow Pit channel constitute a common supply. This determination was reaffirmed in SWRCB Order 79-34. Because the conditions at the other two pumping plants are similar to that found at Pumping Plant 3 (Poodle Creek) i.e., structures in the East Borrow Pit channel back water up to the pumping plant and into the channels outside of the bypass, we conclude the channels and drains leading to Pumping Plants 1 and 2 and the East Borrow Pit constitute a common supply. We have discussed this issue and position with legal counsel who agree with our conclusion.

The attached table provides our estimate of the potential demand, maximum rate of diversion, at each of the three DWR pumping stations on the East Borrow Pit. Our estimate is

2450 Alhambra Boulevard, 2nd Floor • Sacramento, California 95817 • Phone: (916) 456-4400 • Fax: (916) 456-0253 • Email: mbk@mbkengineers.com

based on the quantities authorized under the various water rights and our discussions with the water right holders regarding their cropping patterns and irrigation practices. We have estimated the potential demand by applying a factor of 1 cubic foot per second (cfs) per 40 irrigated acres. This factor is used by the SWRCB in estimating the instantaneous demand for rice land. In some cases, the calculated instantaneous demand exceeds the quantity identified in the water right license. However, because the licenses allow the rate of diversion rate to be averaged over a 30-day period, we feel the 1 cfs to 40-acre factor is a reasonable estimate of the demand during the rice flood-up period. In certain cases, we have limited the calculated demand based on discussions with the individual water user regarding actual irrigation practices. The total estimated peak demand identified for each pumping plant assumes all water users are diverting at the same time and no other water source is available. These assumptions have been used to assure fish screens are designed in such a way as not to impact the water users ability to divert water from these channels.

Please call if you have any questions.

Sincerely,
MBK ENGINEERS

Gary Kienlen

Gary Kienlen, P.E.

GK/mv
D:\WPDOCS-2001\G K\L0814011.DOC

Enclosure

cc: Ms. Nicole VanVleck
Mr. Dick Akin
Mr. John Oji
Mr. Al Montna
Mr. Stuart Somach

Sutter Bypass - Butte Slough Water Users

Name	Application Number	Permit/ License	Quantity (cfs)	Permitted Acres	Adjusted Acres [1]	Estimated Peak Demand [2,3]
PUMP PLANT #1 (Chandler)						
Akin Ranch	5754	L 3755	13.7	687	687	17.2
Akin Ranch	25883	L 12264	6.7	356.49	82	2.1
Elysian Farms, Inc. et al	8830	L 2704	12.54	520.87	521	13
Akers, Joseph et al	9515	L 2761	15	1456.98	320	0
Akers, Joseph et al	11058	L 3642	15	2384.73	2385	32
Etcheverry, Juan	14867	L 4773	15	470	470	11.8
Rai, Joginder	15996	L 10046	1.48	320	320	8
M L Farms, Inc.	16539	L 8953	3	315.3	315	7.9
Davit	25936	L12089	0.45	66	66	1.7
Total			**82.87**		**5166**	**93.7**
PUMP PLANT #2 (Obanion)						
Akin Ranch	5754	L 3755	13.7	687	687	17.2
Akin Ranch	25883	L 12264	6.7	356.49	82	2.1
Creps Family	11025	L 3088	2	75	75	1.9
Dettling	11916		11.6	464.2	464	11.6
Dettling	14685		7	464.2	0	0
Etcheverry, Juan	14867	L 4773	15	470	470	11.8
Total			**56.0**		**1778**	**44.6**
PUMP PLANT #3 (Wadsworth)						
Bihlman, D	10983	L 3312	4	154.6	154.6	3.9
Bohannon	22969	L 10576	3.67	147	147	3.7
Bumpus	10787	L 4002	3	280	280	7
Bumpus	10788	L 3281	3	215	215	5.4
Bumpus	24637	L 12203	4.2	215	215	5.4
Bumpus	24638	L 12204	2.6	136.1	0	0
Bumpus	24639	L 12205	3	176.1	176.1	4.4
Davis	10769	L3360	0.55	44	44	1.1
Davis	10905	L 3152	2.5	100	100	2.5
Davis	12926	L4066	3	116	116	2.9
Davis	14686	L 4582	3	100	100	2.5
Davis	7988A	L 2034A	1.5	112.4	112.4	2.8
Morehead	23673	P 16304	2	48.84	48.84	1.2
Tarke, James	13605	L 3832	3	128	128	3.2
Tarke, James	19749	L 8012	5	404	404	10.1
Total			**44.02**		**2240.9**	**56.1**

[1] Adjusted Acres account for overlapping water rights

[2] Estimated as the higher of 1cfs/40ac or the permitted diversion rate. One cfs per 40 acres is the flow rate used by the Division of Water Rights for justification of diversion rates for water right applications for irrigation of rice.

[3] Some quantities are limited based on discussions with water users regarding actual irrigation practices and to account for overlapping water rights.

September 28, 2001

Ms. Lanna B. Smith
Sutter County Clerk/Recorder
433 Second Street
Yuba City, California 95991

Dear Ms. Smith:

Enclosed is a Notice of Exemption for the Sutter Bypass Fish Screen Geologic Exploration. The project involves geologic exploration (auger drilling) along the Sutter Bypass in central Sutter County. This exploration is being conducted by the Department of Water Resources as part of an investigation of potential fish screen design alternatives. Data collection involves drilling six 8-inch diameter auger holes to 60 feet.

If you have any questions or need additional information concerning this project, please contact me at (530) 529-7388 or David Bogener at (530) 529-7329.

Sincerely,

Andrew Corry, Acting Chief
Water Management Branch

Enclosures

Sutter Bypass NOE-lm-010928.doc

DBogener:Lori Miles

Spell Check: 9/28/01

NOTICE OF EXEMPTION

To: Office of Planning and Research
1400 Tenth Street, Room 121
Post Office Box 3044
Sacramento, California 95812-3044

Ms. Lanna B. Smith
Sutter County Clerk/Recorder
433 Second Street
Yuba City, California 95991

From: Department of Water Resources
Northern District
2440 Main Street
Red Bluff, California 96080

Project Title: Enclosed is a Notice of Exemption for the Sutter Bypass Fish Screen Geologic Exploration

Project Location: Eastern Sutter County
(See attached figure)

Project Location: Specific locations include
T 13N, R 3E, east central section 33
T14N, R 2E, southwest corner section 26
T15N, R 2E, west central Section 29

Description of Nature, Purpose, and Beneficiaries of Project:

The proposed project involves drilling six 8-inch diameter auger holes along the Sutter Bypass in central Sutter County (see attached figures). The purpose of the proposed project is to collect basic geologic data on geologic substructure to facilitate cost estimates and project design.

Drilling will be conducted using a large rubber-wheeled drill rig (similar to a CME 750) using hollow-stem augers. Additional support vehicles including a semi-tractor-lowboy trailer for drill rig transport, drill rig support vehicle, and pickup trucks will be parked on-site. The drilling rig and associated equipment will occupy an area of approximately 100 feet by 50 feet. Drilling will occur between October and January 2001 during daylight hours only. Geologic exploration will take approximately two days at each of the three locations. No occupied dwellings are present within 3/4 miles of any drill locations. No site improvements other than possibly weedeating (to reduce fire hazard) will be required for site preparation at these drill sites. No

improvements or ground disturbance will be required to allow vehicular access to the drill locations. Materials excavated from the auger hole will be backfilled and compacted upon project completion. Any extra material will be spread on the existing gravel access roads.

Potential site impacts include minor disturbance of the ground surface within and adjacent to the drill location and a temporary increase in noise levels during drilling. No trees or shrubs will be removed. No discharge of sediment will occur. If subsurface historical or archeological resources are uncovered during excavation, all work will stop immediately until the Department Archeologist is consulted.

All of the proposed drilling locations are on State lands. Field surveys for State and federally "listed" plants and animals, jurisdictional wetlands, and surface archaeological/historical resources were completed at each of the proposed drill locations, with no unavoidable adverse impacts identified.

The purpose of the proposed project is to collect basic geologic data on geologic substructure. Project beneficiaries include the California Department of Water Resources, CALFED, and California water users.

Name of Public Agency Approving Project: California Department of Water Resources

Name of Person or Agency Carrying Out Project: California Department of Water Resources

Exempt Status: Categorical exemption for basic data collection (Section 15306) Categorical exemption for minor alteration of land (Section 15304)

Reasons Why the Project Is Exempt: Section 15306-basic data collection, research, experimental management, and resource evaluation activities, which do not result in a serious or major disturbance to an environmental resource.

Section 15304 (f) Minor trenching and backfilling where the surface of the land is restored and the project does not involve removal of healthy, mature, scenic trees.

Contact Person: Dave Bogener, Environmental Specialist
Department of Water Resources
2440 Main Street
Red Bluff, California 96080
(530) 529-7329

Signature: _____

Date Received for Filing at OPR_____

Ms. Lanna B. Smith
Sutter County Clerk/Recorder
433 Second Street
Yuba City, California 95991

Office of Planning and Research
1400 Tenth Street, Room 121
Post Office Box 3044
Sacramento, California 95812-3044

DEPARTMENT OF WATER RESOURCES
NORTHERN DISTRICT
2440 MAIN STREET
RED BLUFF, CA 96080-2398

November 2, 2001

Mr. Stephen T. Bradley, Chief Engineer
The Reclamation Board
State of California
1416 Ninth Street, Room 1623
Sacramento, California 95814

Dear Mr. Bradley:

The Department of Water Resources, Northern District needs permission to conduct Geologic Exploration activities on State Reclamation Board land lying within the levees of the Sutter Bypass. The DWR Division of Engineering, Project Geology Section will oversee the drilling work.

You have already received copies of the proposed Geologic Exploration Program and the California Environmental Quality Act Notice of Exemption for the proposed work. The proposal is to begin work on November 5, 2001. The drilling should be completed by November 19, 2001. The six 8-inch auger holes will be drilled through the existing access roads, near the inside toe of the levee, to a depth of up to 60 feet. The holes will be capped with a cement grout immediately after completion of the drilling. Thus, they will be sealed before the flood season begins. The levee and work area will be left in the same condition as it was prior to the drilling work.

1. Only the work described above is authorized.

2. The borings on the levee section shall be backfilled with a cement-bentonite slurry prior to November 30, 2001.

3. The project work area shall be restored to at least the same condition that existed prior to commencement of work.

4. DWR will be responsible for repairing any and all damages to the levee section and floodway caused by DWR in its performance of this geologic drilling project.

5. DWR Floodplain Inspection Section will be notified by calling (916) 574-1213, at least 5 days prior to start of work.

6. This letter does not relieve Northern District of the responsibility to obtain authorization from all concerned federal, State, and local agencies; or to satisfy all California CEQA requirements.

7. The Reclamation Board shall not be held liable for any damages resulting from granting this approval, operation of the flood control project, releases of water from storage reservoirs, or by runoff from upstream watersheds.

If you agree to allow the proposed Geologic Exploration Program to go forward as described, please sign and date where indicated below and fax a signed copy to my attention at (530) 529-7322.

DWR has permission to conduct the geologic exploration work as described above.

Stephen T. Bradley

Stephen T. Bradley, Chief Engineer
The Reclamation Board

11-8-01

Date

If you have questions or need additional information, you may contact Tim Todd, Project Geology at (916) 323-8938 or me at (530) 529-7348.

Sincerely,

Curtis K Anderson

Curtis Anderson, Chief
Engineering Studies Section

Appendix B Table of Contents

Pumping Plant No. 1 Stage Differential Chart B-2
Pumping Plant No. 1 Frequency Curve B-3
Pumping Plant No. 2 Stage Differential Chart B-4
Pumping Plant No. 2 Frequency Curve B-5
Pumping Plant No. 3 Stage Differential Chart B-6
Pumping Plant No. 3 Frequency Curve B-7

Pumping Plant No. 1 - Stage Differential Chart

(Positive values indicate East Borrow Canal (EBC) stage is higher than sump stage)
(Negative values indicate EBC stage is lower than sump stage)

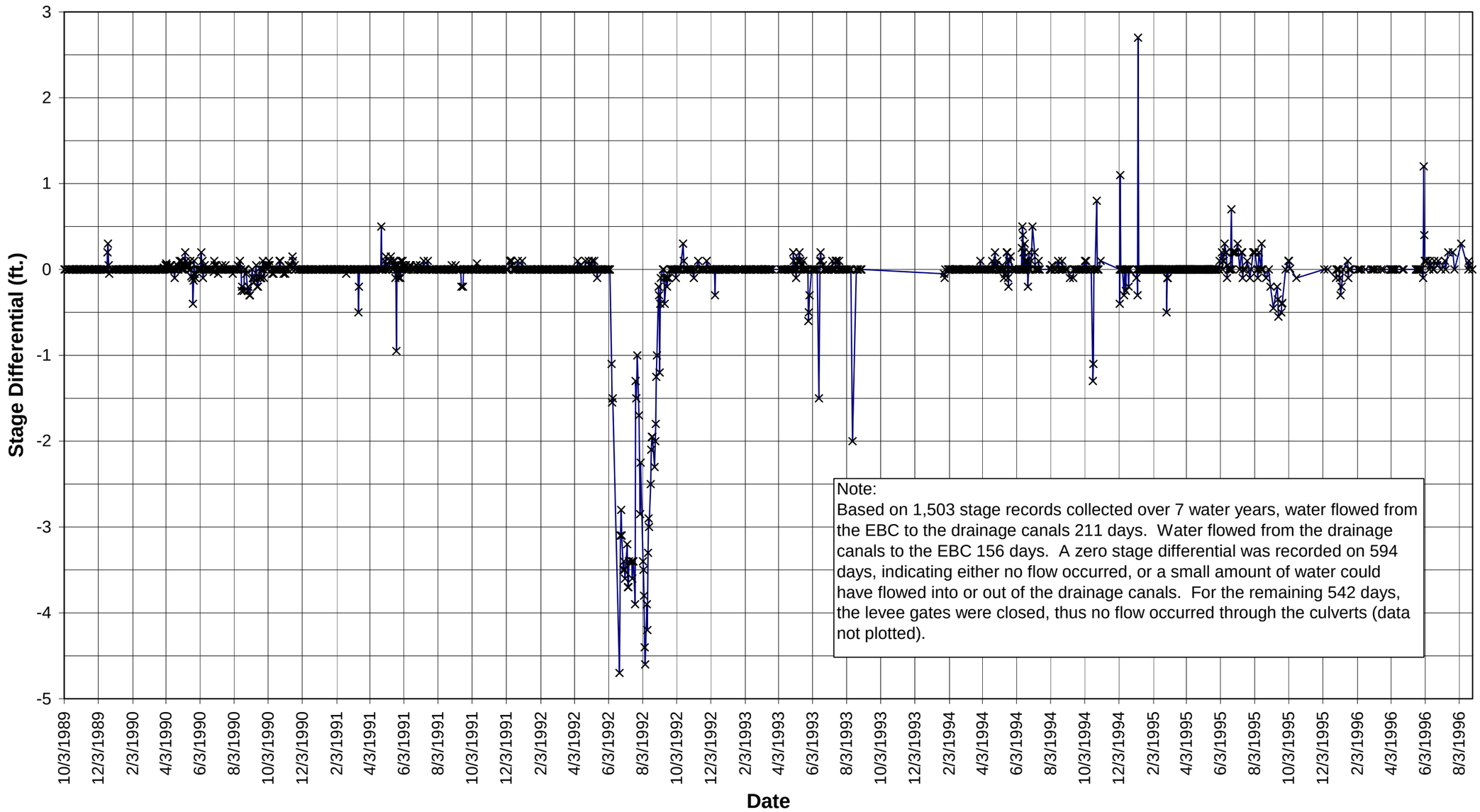

(Based on intermittent records from water years 1990 through 1996)

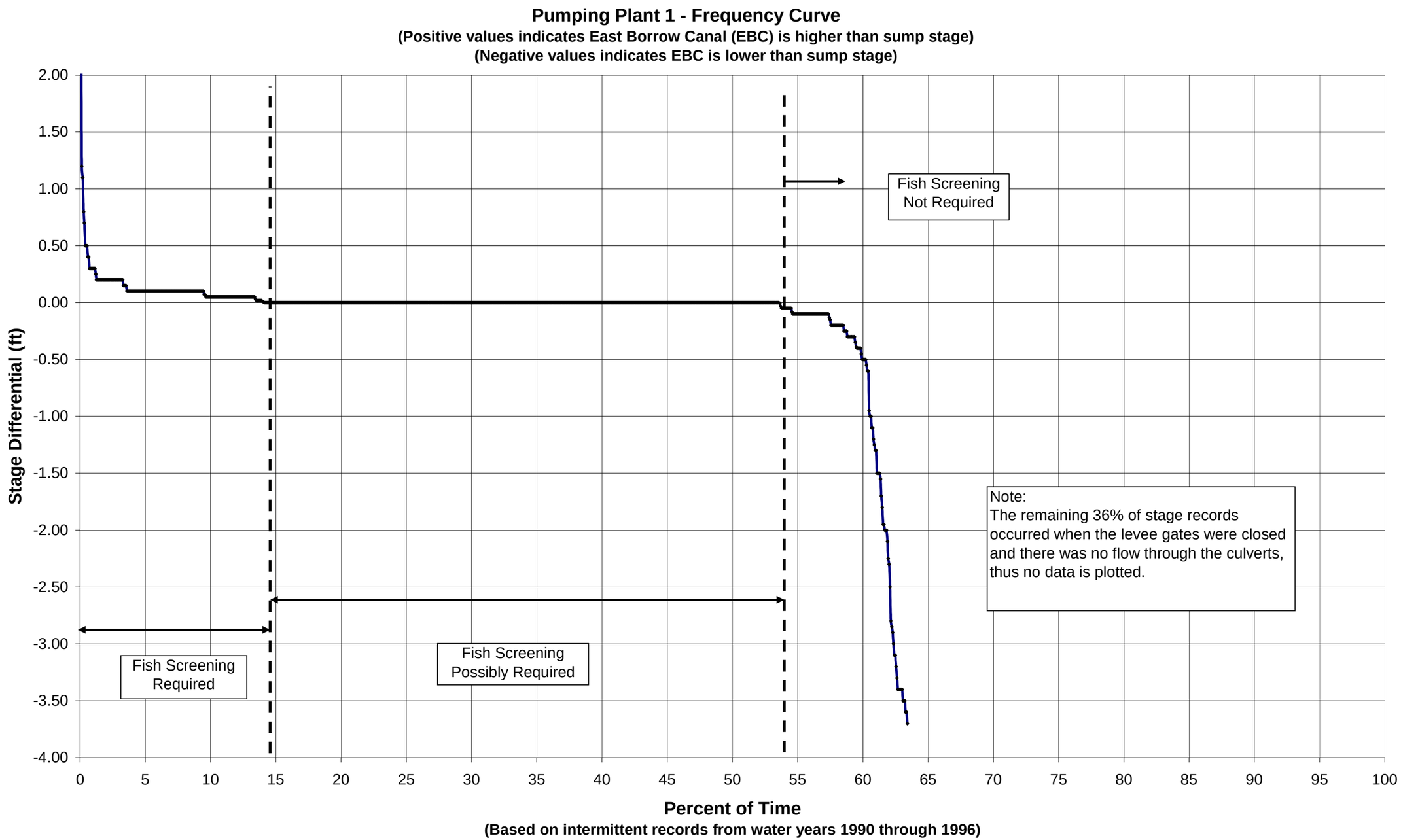
Pumping Plant 1 - Frequency Curve
(Positive values indicates East Borrow Canal (EBC) is higher than sump stage)
(Negative values indicates EBC is lower than sump stage)
Stage Differential (ft)
2.00
1.50
1.00
0.50
0.00
-0.50
-1.00
-1.50
-2.00
-2.50
-3.00
-3.50
-4.00
0
5
10
15
20
25
30
35
40
45
50
55
60
65
70
75
80
85
90
95
100
Fish Screening Not Required
Fish Screening Possibly Required
Fish Screening Required
Note:
The remaining 36% of stage records occurred when the levee gates were closed and there was no flow through the culverts, thus no data is plotted.
Percent of Time
(Based on intermittent records from water years 1990 through 1996)

Pumping Plant 2 - Stage Differential Chart
(Positive values indicate East Borrow Canal (EBC) stage is higher than sump stage)
(Negative values indicate EBC stage is lower than sump stage)

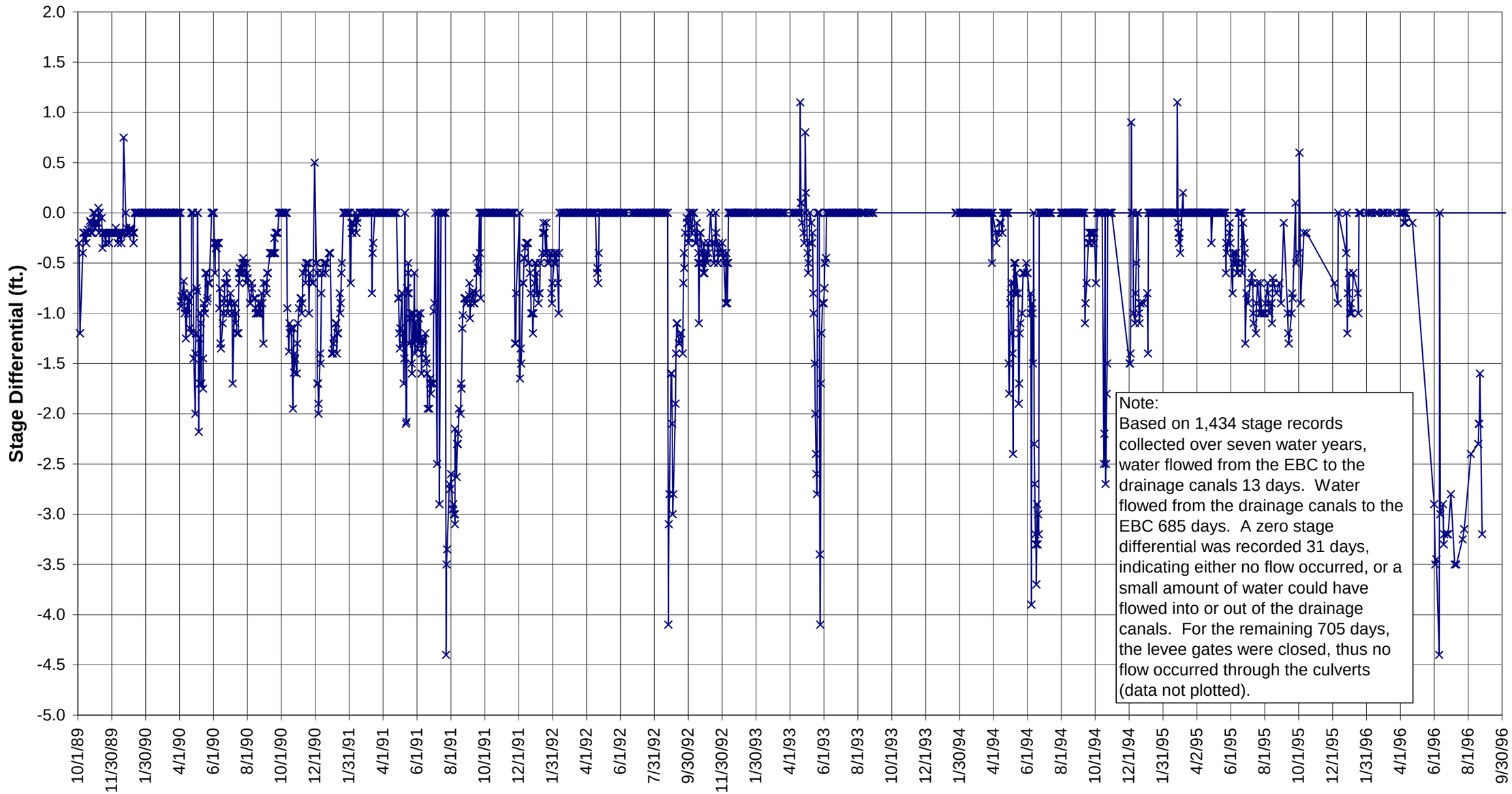

(Based on intermittent records from water years 1990 through 1996)

Pumping Plant No. 2 - Frequency Curve
(Positive stage values indicate East Borrow Canal (EBC) is higher than sump stage)
(Negative values indicate EBC is lower than sump stage)

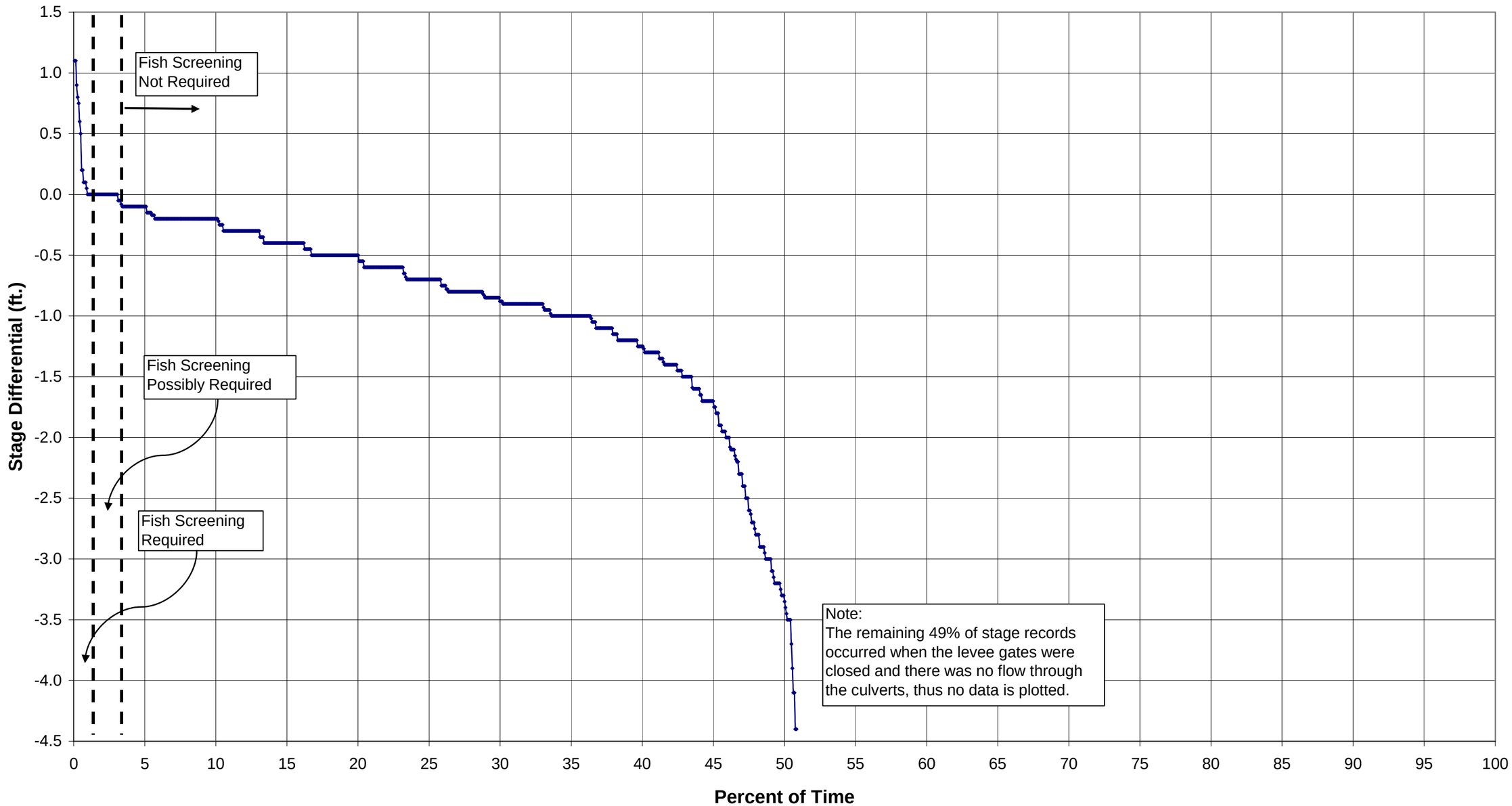

Percent of Time
(Based on intermittent records from water years 1990 through 1996)

Pumping Plant No. 3 - Stage Differential Chart

(Positive values indicate East Borrow Canal (EBC) stage is higher than sump stage)

(Negative values indicate EBC stage is lower than sump stage)

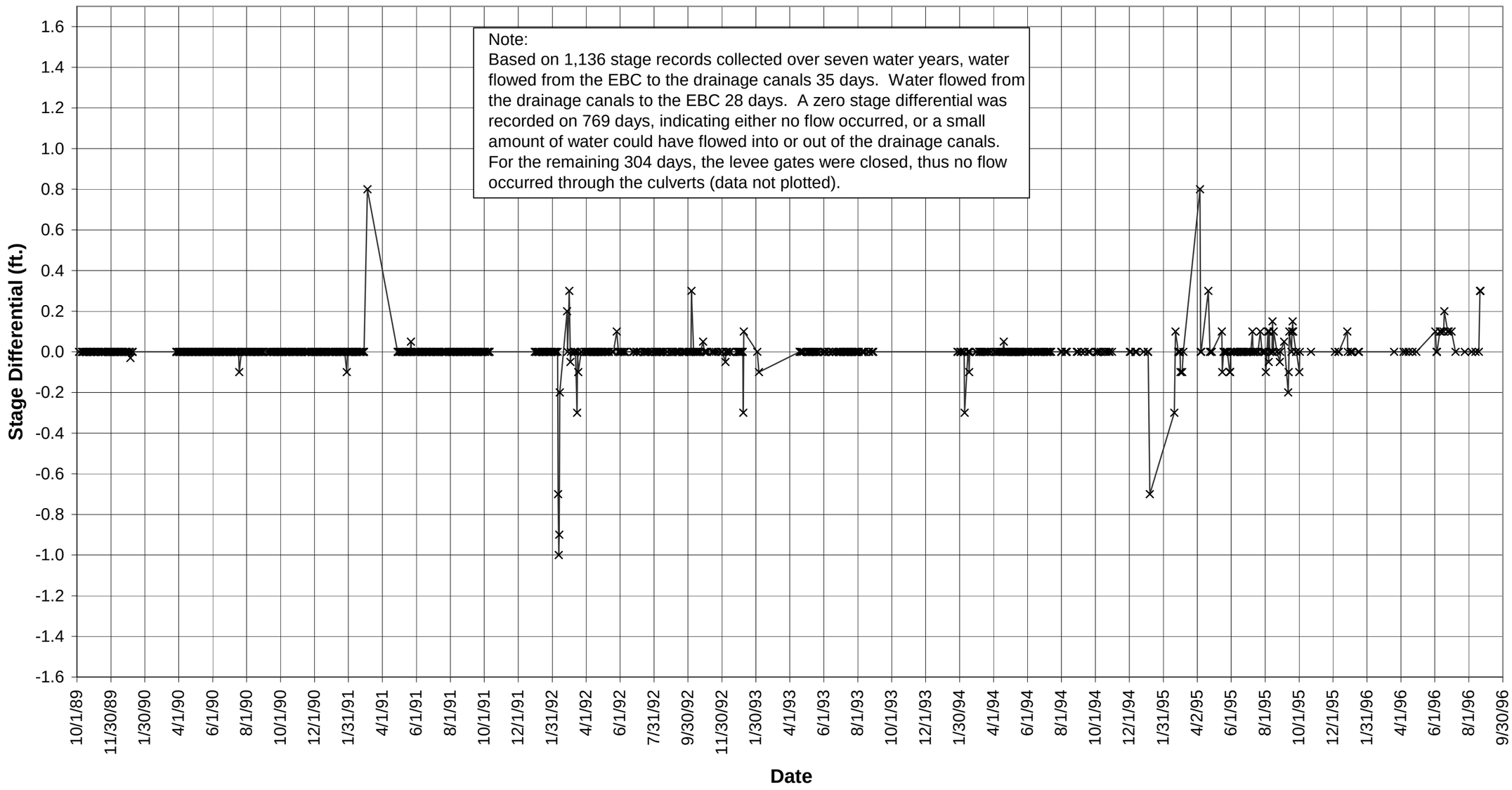

(Based on intermittent records from water years 1990 through 1996)

Pumping Plant No. 3 - Frequency Curve
(Positive values indicate East Borrow Canal (EBC) is higher than sump stage)
(Negative values indicate EBC is lower than sump stage)

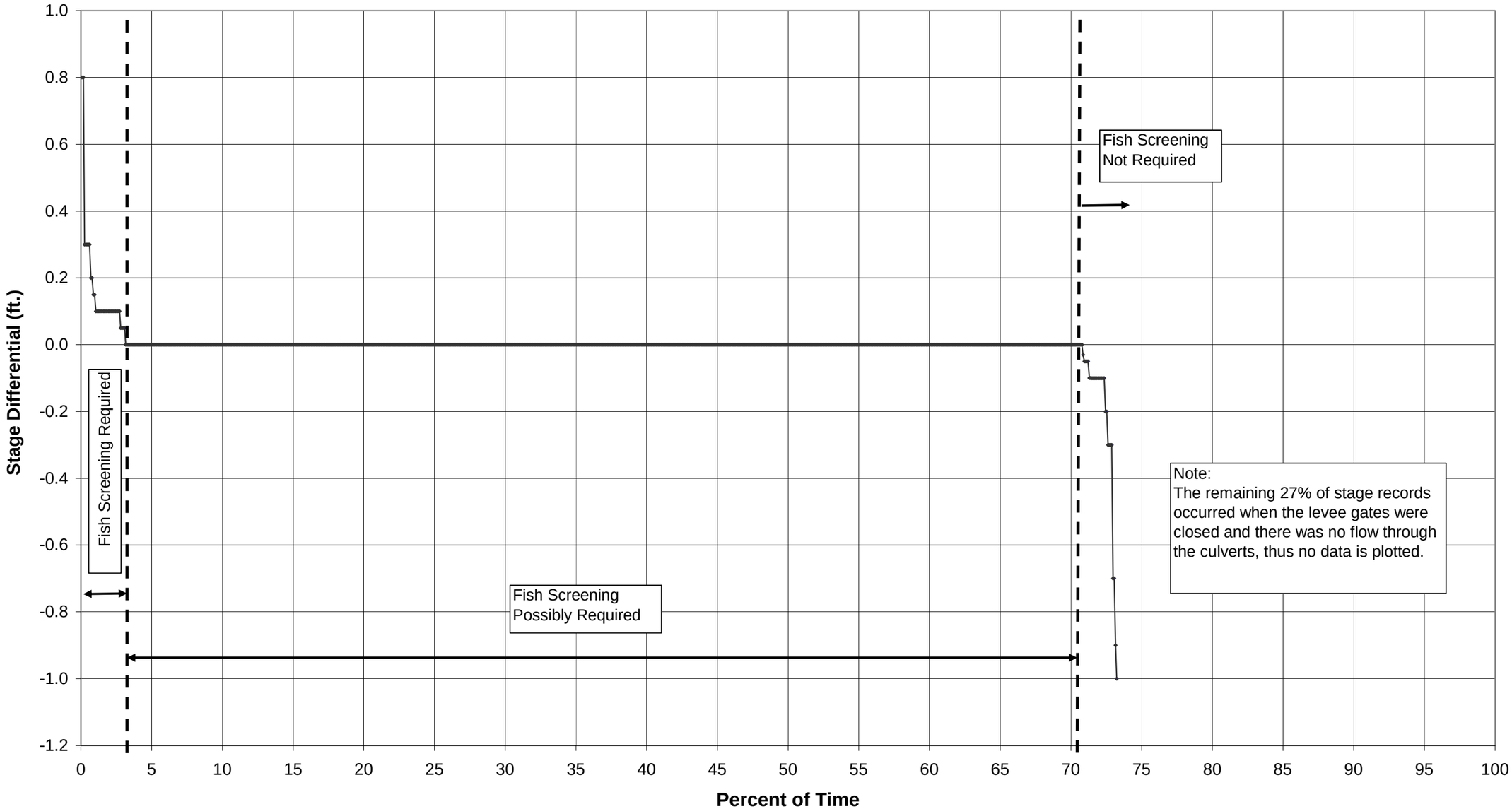

Percent of Time
(Based on intermittent records from water years 1990 through 1996)

Appendix C Table of Contents

Preliminary Environmental Review of the Lower Butte Creek - Sutter Bypass Department of Water Resources Pumping Plants Fish Screening Project C-2
Table 1. Preliminary Environmental Issues Associated with the Lower Butte Creek - Sutter Bypass Department of Water Resources Pumping Plants Fish Screening Project C-4
Table 2. Special Status Species Known to Occur in the Project Vicinity C-5
Table 3. Environmental Permits Potentially Required for the Proposed Lower Butte Creek - Sutter Bypass Department of Water Resources Pumping Plants Fish Screening Project C-6

March 18, 2002

To: Kevin Dossey

From: Dave Bogener

Preliminary Environmental Review of the Lower Butte Creek - Sutter Bypass Department of Water Resources Pumping Plants Fish Screening Project

Per your request, Ms. Gail Kuenster and I conducted a preliminary evaluation of the three proposed fisheries restoration projects at the DWR Pumping Plants along the Sutter Bypass. The purpose of these projects is to minimize impacts to fisheries resources through the installation of adequate fish screening of diverted water at these three locations.

A preliminary list of potential environmental impacts associated with the proposed projects is presented in Table 1. Potentially significant environmental issues related to water use and impacts to State and federally "listed" aquatic species have been identified. I recommend that both of these issues be evaluated prior to initiation of final design as they may influence project design, timing, and project construction options. Evaluation of the water use issues should include the regulatory agencies including the National Marine Fishery Service, California Department of Fish and Game, U.S. Fish and Wildlife Service, and Regional Water Quality Control Board. Project permitting may be delayed until the water use issues have been examined and finalized through a stakeholders' process. I further recommend that informal consultation with DFG, USF&WS, and NMFS occur prior to final design. This informal consultation will help identify the in-channel construction period and development of project avoidance measures to minimize short-term construction related impacts to species protected under the State or federal Endangered Species acts (Table 2). Specifically, these consultations should focus on avoidance measures related to Sacramento splittail, chinook salmon, steelhead, and giant garter snake as all of these species are known to occur within the project area and have the potential to be directly effected by the proposed project. Limited additional survey for other species including valley elderberry longhorn beetle, rose mallow, and San Francisco campion, may also be required during development of the project design. None of these species were identified during initial field reconnaissance of the immediate project area. However, access improvements, staging areas, and materials stockpiles areas were not identified at the time of the initial site survey.

The proposed project will require a US Army Corp. of Engineers 404 Permit for Clean Water Act compliance (Table 3). The dredge and fill quantities involved in the project may preclude use of Nationwide Permits (streamlined permit process) and require submittal of an individual permit which may require mitigation. The 404 permit will provide the federal nexus for a Section 7 consultation under the federal ESA. A formal ESA consultation requires up to 135 days for agency review after project design, timing, and avoidance/mitigation have been identified. Consultation with both NMFS

and USF&WS will be required for project compliance. National Environmental Protection Act compliance will be required if any federal funding is involved in the project.

A RWQCB Water Quality Certification will be required for compliance with Section 401 of the Clean Water Act. This certification will identify project specific best management practices to minimize project impacts to beneficial uses of water. These BMPs may include criteria to reduce erosion, sedimentation, hazardous material releases. BMPs will also provide criteria for de-watering and construction methods, and monitoring requirements. If all three projects proceed together for permitting, a RWQCB stormwater permit may be required if total soil disturbance exceeds 5 acres. Soil disturbance would include any access improvements, staging areas, materials stockpile areas and construction areas. A DFG Streambed Alteration Agreement (1601) will be required to address project related impacts to bed, bank, channel and associated vegetation. This agreement requires California Environmental Quality Act compliance at the time of the 1601 submittal. The proposed projects are categorically exempt under CEQA. However, the ESA take issues may require preparation of an Initial Study and subsequent Mitigated Negative Declaration or EIR for project CEQA compliance. Several species protected only under the State Endangered Species Act occur in this portion of Sutter County including bank swallow, willow flycatcher, western yellow-billed cuckoo, and Swainson's hawk. The project as currently designed would not result in modification of bank swallow, willow flycatcher, or western yellow-billed cuckoo habitat. However, evaluation of potential project impacts on nesting Swainson's hawks will require pre-project survey of areas within ½ mile of the project area during the nesting season to meet the survey protocol for this migratory raptor. Approval of the State Reclamation Board will be required prior to working in the floodplain at this location. As previously stated, water use issues have been identified as a significant project related concern. Resolution of this issue is required prior to final design, environmental permitting, and documentation.

Compliance with local ordinances may be required if some entity other than a State Agency permits and constructs the project.

If you have any questions concerning the information provided, please contact me at (530) 529-7329.

Table 1. Preliminary Environmental Issues Associated with the Lower Butte Creek - Sutter Bypass Department of Water Resources Pumping Plants Fish Screening Project

Aesthetics	Minor, short-term construction related impacts may occur
Agricultural Resources	Minor, short-term construction related impacts may occur if agricultural lands are used for staging or materials storage
Air Quality	Minor short-term construction related impacts may require dust abatement practices
Biological Resources	Potentially significant ESA take issues related to in-channel construction window, dewatering, and screen design may occur
Cultural Resources	Project impacts to historical resources should be avoidable Potential impacts to cultural resources unlikely but project will require cultural evaluation by specialist for permitting
Geology and Soils	Pre-project testing of materials to be removed for toxins and pesticide levels is suggested
Hazards and Hazardous Materials	Increased risk of release (cement or fuel) associated with the project. Project design should minimize risk
Hydrology and Water Quality	Potential short-term impacts to water quality during dewatering and construction.
Land Use and Planning	No issues or impacts identified
Mineral Resources	No issues or impacts identified
Noise	Short-term construction related impacts may occur. Limit construction activities to daylight hours.
Population and Housing	No issues or impacts identified
Public Services	No issues or impacts identified
Recreation	Short-term construction related impacts may occur related to recreational fishing.
Transportation/Traffic	No issues or impacts identified
Utilities and Service Systems	No issues or impacts identified
Public Health	No issues or impacts identified
Environmental Justice	No issues or impacts identified

Table 2. Special Status Species Known to Occur in the Project Vicinity

Class	Scientific name	Common name	Status
Plants			
	Layia serptentrionalis	Colusa layia	CNPS 1B
	Silene verecunda ssp. Verecunda	San Francisco campion	CNPS 1B
	Hibiscus lasiocarpus	rose mallow	CNPS 2
Invertebrates			
	Lepidurus packardi	vernal pool tadpole shrimp	FE
	Desmocerus californicus dimorphus	valley elderberry longhorn beetle	FT
Fish			
	Pogonichthys macrolepidotus	Sacramento splittail	FT
	Oncoryhynchus tshawyyscha	winter-run chinook salmon	FE,SE
	Oncoryhynchus tshawyyscha	spring-run chinook salmon	ST, FT
	Oncoryhynchus tshawyyscha	fall-run chinook salmon	FC
	Oncoryhynchus tshawyyscha	late fall-run chinook salmon	FC
	Oncorhynchus mykiss	steelhead -Central Valley ESU	FT
Reptiles			
	Thamnophis gigas	giant garter snake	FT
Birds			
	Riparia riparia	bank swallow	ST
	Empidonax traillii	willow flycatcher	ST
	Coccyzus americanus occidentalis	western yellow-billed cuckoo	SE, FC
	Buteo swainsoni	Swainson's hawk	ST

Key
CNPS 1B-rare, threatened or endangered in California or elsewhere
CNPS 2-rare, threatened or endangered in California but more common elsewhere
FE-federal endangered
FT-federal threatened
SE-State endangered
ST-State threatened

Table 3. Environmental Permits Potentially Required for the Proposed Lower Butte Creek - Sutter Bypass Department of Water Resources Pumping Plants Fish Screening Project

Federal
USACE 404 Permit - Individual Permit (may require mitigation)
Project does not appear to meet the requirements for use of USACOE Nationwide Permits
Federal Endangered Species Act Compliance (see table 2)
Federally listed species are present, will need federal nexus for Section 7 ESA consultation
Nepa Compliance (if federal funds or approvals are involved)
State
RWQCB 401 Water Quality Certification
RWQCB Stormwater Permit (if ground disturbance involves more than 5 acres)
DFG 1600 Agreement (requires CEQA compliance)
CEQA Compliance (Categorical exemptions may apply)
State Endangered Species Act Compliance (see table 2)
Reclamation Board Approvals
Local
Sutter County grading and or tree ordinance

Appendix D Table of Contents

DFG Fish Screening Criteria D-2
NMFS Fish Screening Criteria for Anadromous Salmonids D-8

STATE OF CALIFORNIA

RESOURCES AGENCY

DEPARTMENT OF FISH AND GAME

FISH SCREENING CRITERIA

June 19, 2000

1. STRUCTURE PLACEMENT

A. Streams And Rivers (flowing water): The screen face shall be parallel to the flow and adjacent bankline (water's edge), with the screen face at or streamward of a line defined by the annual low-flow water's edge.

The upstream and downstream transitions to the screen structure shall be designed and constructed to match the bankline, minimizing eddies upstream of, in front of, and downstream of, the screen.

Where feasible, this "on-stream" fish screen structure placement is preferred by the California Department of Fish and Game.

B. In Canals (flowing water): The screen structure shall be located as close to the river source as practical, in an effort to minimize the approach channel length and the fish return bypass length. This "in canal" fish screen location shall only be used where an "on-stream" screen design is not feasible. This situation is most common at existing diversion dams with headgate structures.

The current National Marine Fisheries Service - Southwest Region criteria for these types of installations shall be used (Attachment A).

C. Small Pumped Diversions: Small pumped diversions (less than 40 cubic-feet per second) which are screened using "manufactured, self-contained" screens shall conform to the National Marine Fisheries Service - Southwest Region criteria (Attachment A).

D. Non-Flowing Waters (tidal areas, lakes and reservoirs): The preferred location for the diversion intake structure shall be offshore, in deep water, to minimize fish contact with the diversion. Other configurations will be considered as exceptions to the screening criteria as described in Section 5.F. below.

2. APPROACH VELOCITY (Local velocity component perpendicular to the screen face

A. Flow Uniformity: The design of the screen shall distribute the approach velocity

uniformly across the face of the screen. Provisions shall be made in the design of the screen to allow for adjustment of flow patterns. The intent is to ensure uniform flow distribution through the entire face of the screen as it is constructed and operated.

B. Self-Cleaning Screens: The design approach velocity shall not exceed:

1. Streams and Rivers (flowing waters) - Either:

a. 0.33 feet per second, where exposure to the fish screen shall not exceed fifteen minutes, or

b. 0.40 feet per second, for small (less than 40 cubic-feet per second) pumped diversions using "manufactured, self-contained" screens.

2. In Canals (flowing waters) - 0.40 feet per second, with a bypass entrance located every one-minute of travel time along the screen face.

3. Non-Flowing Waters (tidal areas, lakes and reservoirs) - The specific screen approach velocity shall be determined for each installation, based on the species and life stage of fish being protected. Velocities which exceed those described above will require a variance to these criteria (see Section 5.F. below).

(Note: At this time, the U.S. Fish and Wildlife Service has selected a 0.2 feet per second approach velocity for use in waters where the Delta smelt is found. Thus, fish screens in the Sacramento-San Joaquin Estuary should use this criterion for design purposes.)

C. Screens Which Are Not Self-Cleaning: The screens shall be designed with an approach velocity one-fourth that outlined in Section B. above. The screen shall be cleaned before the approach velocity exceeds the criteria described in Section B.

D. Frequency Of Cleaning: Fish screens shall be cleaned as frequently as necessary to prevent flow impedance and violation of the approach velocity criteria. A cleaning cycle once every 5 minutes is deemed to meet this standard.

E. Screen Area Calculation: The required wetted screen area (square feet), excluding the area affected by structural components, is calculated by dividing the **maximum** diverted flow (cubic-feet per second) by the allowable approach velocity (feet per second). Example:

1.0 cubic-feet per second / 0.33 feet per second = 3.0 square feet

Unless otherwise specifically agreed to, this calculation shall be done at the **minimum** stream stage.

3. SWEEPING VELOCITY (Velocity component parallel to screen face)

A. In Streams And Rivers: The sweeping velocity should be at least two times the allowable approach velocity.

B. In Canals: The sweeping velocity shall exceed the allowable approach velocity. Experience has shown that sweeping velocities of 2.0 feet per second (or greater) are preferable.

C. Design Considerations: Screen faces shall be designed flush with any adjacent screen bay piers or walls, to allow an unimpeded flow of water parallel to the screen face.

4. SCREEN OPENINGS

A. Porosity: The screen surface shall have a minimum open area of 27 percent. We recommend the maximum possible open area consistent with the availability of appropriate material, and structural design considerations.

The use of open areas less than 40 percent shall include consideration of increasing the screen surface area, to reduce slot velocities, assisting in both fish protection and screen cleaning.

B. Round Openings: Round openings in the screening shall not exceed 3.96mm (5/32in). In waters where steelhead rainbow trout fry are present, this dimension shall not exceed 2.38mm (3/32in).

C. Square Openings: Square openings in screening shall not exceed 3.96mm (5/32in) measured diagonally. In waters where steelhead rainbow trout fry are present, this dimension shall not exceed 2.38mm (3/32in) measured diagonally.

D. Slotted Openings: Slotted openings shall not exceed 2.38mm (3/32in) in width. In waters where steelhead rainbow trout fry are present, this dimension shall not exceed 1.75mm (0.0689in).

5. SCREEN CONSTRUCTION

A. Material Selection: Screens may be constructed of any rigid material, perforated, woven, or slotted that provides water passage while physically excluding fish. The largest possible screen open area which is consistent with other project requirements should be used. Reducing the screen slot velocity is desirable both to protect fish and to ease cleaning requirements. Care should be taken to avoid the use of materials with sharp edges or projections which could harm fish.

B. Corrosion and Fouling Protection: Stainless steel or other corrosion-resistant material is the screen material recommended to reduce clogging due to corrosion. The use of both active and passive corrosion protection systems should be considered.

Consideration should be given to anti-fouling material choices, to reduce biological fouling problems. Care should be taken not to use materials deemed deleterious to fish and other wildlife.

C. Project Review and Approval: Plans and design calculations, which show that all the applicable screening criteria have been met, shall be provided to the Department before written approval can be granted by the appropriate Regional Manager.

The approval shall be documented in writing to the project sponsor, with copies to both the Deputy Director, Habitat Conservation Division and the Deputy Director, Wildlife and Inland Fisheries Division. Such approval may include a requirement for post-construction evaluation, monitoring and reporting.

D. Assurances: All fish screens constructed after the effective date of these criteria shall be designed and constructed to satisfy the current criteria. Owners of existing screens, approved by the Department prior to the effective date of these criteria, shall not be required to upgrade their facilities to satisfy the current criteria unless:

1. The controlling screen components deteriorate and require replacement (i.e., change the opening size or opening orientation when the screen panels or rotary drum screen coverings need replacing),

2. Relocation, modification or reconstruction (i.e., a change of screen alignment or an increase in the intake size to satisfy diversion requirements) of the intake facilities, or

3. The owner proposes to increase the rate of diversion which would result in violation of the criteria without additional modifications.

E. Supplemental Criteria: Supplemental criteria may be issued by the Department for a project, to accommodate new fish screening technology or to address species-specific or site-specific circumstances.

F. Variances: Written variances to these criteria may be granted with the approval of the appropriate Regional Manager and concurrence from both the Deputy Director, Habitat Conservation Division and the Deputy Director, Wildlife and Inland Fisheries Division. At a minimum, the rationale for the variance must be described and justified in the request.

Evaluation and monitoring may be required as a condition of any variance, to ensure that the requested variance does not result in a reduced level of protection for the aquatic resources.

It is the responsibility of the project sponsor to obtain the most current version of the appropriate fish screen criteria. Project sponsors should contact the Department of Fish and Game, the National Marine Fisheries Service (for projects in marine and anadromous waters) and the U.S. Fish and Wildlife Service (for projects in anadromous and fresh waters) for guidance.

Copies of the current criteria are available from the Department of Fish and Game through the appropriate Regional office, which should be the first point of contact for any fish screening project.

Northern California and North Coast Region; 601 Locust Street, Redding, CA 96001 - (916) 225-2300.

Sacramento Valley and Central Sierra Region; 1701 Nimbus Drive, Rancho Cordova, CA 95670 - (916) 358-2900.

Central Coast Region; 7329 Silverado Trail/P.O. Box 46, Yountville, CA 94599 -(707) 944-5500.

San Joaquin Valley-Southern Sierra Region; 1234 E. Shaw Avenue, Fresno, CA 93710 - (209) 243-4005.

South Coast Region; 4649 View Crest Avenue, San Diego, CA 92123 - (619) 467-4201.

Eastern Sierra and Inland Deserts Region; 4775 Bird Farms Road, Chino Hills, CA 91709 - (909) 597-9823.

Marine Region; 20 Lower Ragsdale Drive, #100, Monterey, CA 93940 - (831) 649-2870.

Technical assistance can be obtained directly from the Habitat Conservation Division; 1416 Ninth Street, Sacramento, CA 95814 - (916) 653-1070.

The current National Marine Fisheries Service criteria are available from their Southwest Region; 777 Sonoma Avenue, Room 325, Santa Rosa, CA 95402 - (707) 575-6050.

California Department of Fish and Game Region Map (PDF, 35KB)
This map is in Adobe PDF format. To view it you must have Adobe Acrobat Reader. If you do not have the reader, click here to download. Get Acrobat Reader

Attachment A: National Marine Fisheries Service - Southwest Region Fish Screening Criteria

California Department of Fish and Game

State Headquarters

Resources Building
1416 Ninth Street, 12th Floor
Saramento, CA 95814
(916) 653-7664

Regional Headquarters

Northern California and North Coast Region
601 Locust Street
Redding, CA 96001
(530) 225-2300

Sacramento Valley and Central Sierra Region
1701 Nimbus Road
Rancho Cordova, CA 95670
(916) 358-2900

Central Coast Region
7329 Silverado Trail
Yountville, CA 94599
(707) 944-5500

San Joaquin Valley and Southern Sierra Region
1234 E. Shaw Avenue
Fresno, CA 93710
(209) 243-4005

South Coast Region
4949 View Crest Ave.
San Diego, CA 92123
(619) 467-4201

Eastern Sierra and Inland Deserts Region
4775 Bird Farm Road
Chino Hills, CA 91709
(909) 597-9823

Marine Region
20 Lower Ragsdale Drive #100
Monterey, CA 93940
(831) 649-2870

Field Offices

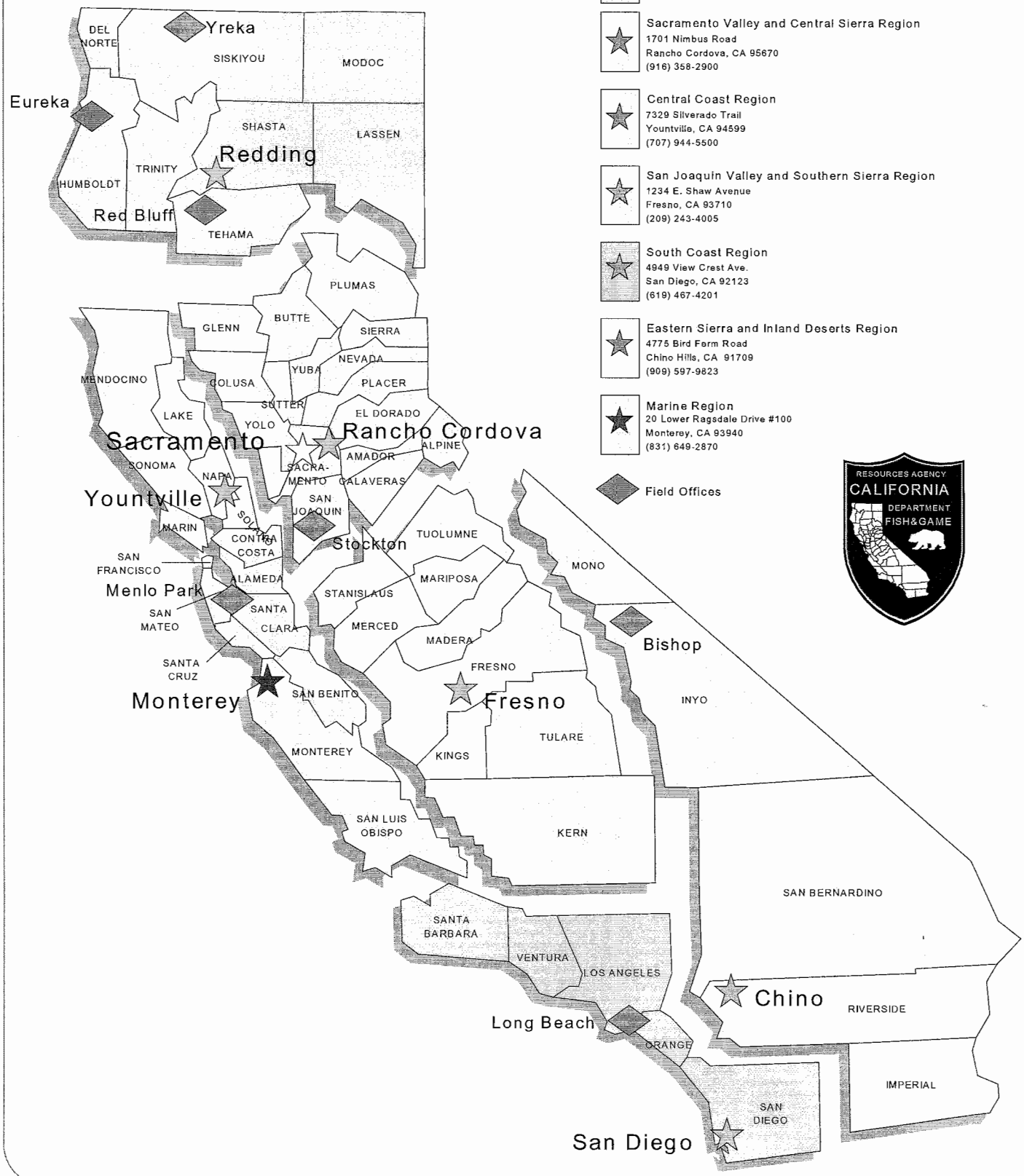

National Marine Fisheries Service
Southwest Region

Fish Screening Criteria
for
Anadromous Salmonids

January 1997

Fish Screening Criteria for Anadromous Salmonids (1)

National Marine Fisheries Service
Southwest Region

January 1997

Table of Contents

I. General Considerations
II. General Procedural Guidelines
III. Screen Criteria for Juvenile Salmonids
A. Structure Placement
B. Approach Velocity
C. Sweeping Velocity
D. Screen Face Material
E. Civil Works and Structural Features
F. Juvenile Bypass System Layout
G. Bypass Entrance
H. Bypass Conduit Design
I. Bypass Outfall
J. Operations and Maintenance
K. Modified Criteria for Small Screens (Diversion Flow less than 40 cfs)

I. General Considerations

This document provides guidelines and criteria for functional designs of downstream migrant fish passage facilities at hydroelectric, irrigation, and other water withdrawal projects. It is promulgated by the National Marine Fisheries Service (NMFS), Southwest Region as a result of its authority and responsibility for prescribing fishways under the Endangered Species Act (ESA), the Federal Power Act, administered by the Federal Energy Regulatory Commission (FERC), and the Fish and Wildlife Coordination Act (FWCA), administered by the U.S. Fish & Wildlife Service.

The guidelines and criteria are general in nature. There may be cases where site constraints or extenuating circumstances dictate a waiver or modification of one or more of these criteria. Conversely, where there is an opportunity to protect fish, site-specific criteria may be added. Variances from established criteria will be considered on a project-by-project basis.

The swimming ability of fish is a primary consideration in designing a fish screen facility. Research shows that swimming ability varies depending on multiple factors relating to fish physiology, biology, and the aquatic environment. These factors include: species, physiological development, duration of swimming time required, behavioral aspects, physical condition, water quality, temperature, lighting conditions, and many others. Since conditions affecting swimming ability are variable and complex, screen criteria must be expressed in general terms and the specifics of any screen design must address on-site conditions.

NMFS may require project sponsors to investigate site-specific variables critical to the fish screen system design. This investigation may include fish behavioral response to hydraulic conditions, weather conditions (ice, wind, flooding, etc.), river stage-discharge relationships, seasonal operations, sediment and debris problems, resident fish populations, potential for creating predation opportunity, and other pertinent information. The size of salmonids present at a potential screen site usually is not known, and can change from year-to-year based on flow and temperature conditions. Thus, adequate data to describe the size-time relationship requires substantial sampling over a number of years. NMFS will normally assume that fry-sized salmonids are present at all sites unless adequate biological investigation proves otherwise. The burden of proof is the responsibility of the owner of the screen facility.

New facilities which propose to utilize unproven fish protection technology frequently require: 1) development of a biological basis for the concept;

2) demonstration of favorable behavioral responses in a laboratory setting;

3) an acceptable plan for evaluating the prototype installation;

4) an acceptable alternate plan should the prototype not adequately protect fish. Additional information can be found in Experimental Fish Guidance Devices, position statement of the National Marine Fisheries Service, Southwest Region, January 1994.

Striped Bass, Herring, Shad, Cyprinids, and other anadromous fish species may have eggs and/or very small fry which are moved with any water current (tides, streamflows, etc.). Installations where these species are present may require individual evaluation of the proposed project using more conservative screening requirements. In instances where state or local regulatory agencies require more stringent screen criteria to protect species other than salmonids, NMFS will generally defer to the more conservative criteria.

General screen criteria and procedural guidelines are provided below. Specific exceptions to these criteria occur in the design of small screen systems (less than 40 cubic feet per second) and certain small pump intakes. These exceptions are listed in Section K, Modified Criteria for Small Screens, and in the separate addendum entitled: Juvenile Fish Screen Criteria For Pump Intakes, National Marine Fisheries Service, Portland, Oregon, May 9, 1996.

II. General Procedural Guidelines

For projects where NMFS has jurisdiction, such as FERC license applications and ESA consultations, a functional design must be developed as part of the application or consultation. These designs must reflect NMFS design criteria and be acceptable to NMFS. Acceptable designs typically define type, location, method of operation, and other important characteristics of the fish screen facility. Design drawings should show structural dimensions in plan, elevation, and cross-sectional views, along with important component details. Hydraulic information should include: hydraulic capacity, expected water surface elevations, and flows through various areas of the structures. Documentation of relevant hydrologic information is required. Types of materials must be identified where they will directly affect fish. A plan for operations and maintenance procedures should be included- i.e., preventive and corrective maintenance procedures, inspections and reporting requirements, maintenance logs, etc.- particularly with respect to debris, screen cleaning, and sedimentation issues. The final detailed design shall be based on the functional design, unless changes are agreed to by NMFS.

All juvenile passage facilities shall be designed to function properly through the full range of hydraulic conditions expected at a particular project site during fish migration periods, and shall account for debris and sedimentation conditions which may occur.

III. Screen Criteria for Juvenile Salmonids

A. Structure Placement

1. General:

The screened intake shall be designed to withdraw water from the most appropriate elevation, considering juvenile fish attraction, appropriate water temperature control downstream or a combination thereof.
The design must accommodate the expected range of water surface elevations.

For on-river screens, it is preferable to keep the fish in the main channel rather than put them through intermediate screen bypasses. NMFS decides whether to require intermediate bypasses for on-river,
straight profile screens by considering the biological and hydraulic conditions existing at each individual project site.

2. Streams and Rivers:

Where physically practical, the screen shall be constructed at the diversion entrance. The screen face should be generally parallel to river flow and aligned with the adjacent bankline. A smooth transition
between the bankline and the screen structure is important to minimize eddies and undesirable flow patterns in the vicinity of the screen. If trash racks are used, sufficient hydraulic gradient is required to route
juvenile fish from between the trashrack and screens to safety. Physical factors that may preclude screen construction at the diversion entrance include excess river gradient, potential for damage by large
debris, and potential for heavy sedimentation. Large stream-side installations may require intermediate bypasses along the screen face to prevent excessive exposure time. The need for intermediate bypasses
shall be decided on a case-by-case basis.

2. Canals:

Where installation of fish screens at the diversion entrance is undesirable or impractical, the screens may be installed at a suitable location downstream of the canal entrance. All screens downstream of the
diversion entrance shall provide an effective juvenile bypass system- designed to collect juvenile fish and safely transport them back to the river with minimum delay. The angle of the screen to flow should be
adequate to effectively guide fish to the bypass. Juvenile bypass systems are part of the overall screen system and must be accepted by NMFS.

3. Lakes, Reservoirs, and Tidal Areas:

a. Where possible, intakes should be located off shore to minimize fish contact with the facility. Water velocity from any direction toward the screen shall not exceed the allowable approach velocity. Where

possible, locate intakes where sufficient sweeping velocity exists. This minimizes sediment accumulation in and around the screen, facilitates debris removal, and encourages fish movement away from the screen face.

b. If a screened intake is used to route fish past a dam, the intake shall be designed to withdraw water from the most appropriate elevation in order to provide the best juvenile fish attraction to the bypass channel as well as to achieve appropriate water temperature control downstream. The entire range of forebay fluctuations shall be accommodated by the design, unless otherwise approved by NMFS.

B. Approach Velocity

Definition: Approach Velocity is the water velocity vector component perpendicular to the screen face.

Approach velocity shall be measured approximately three inches in front of the screen surface.

1. Fry Criteria - less than 2.36 inches {60 millimeters (mm)} in length.

If a biological justification cannot demonstrate the absence of fry-sized salmonids in the vicinity of the screen, fry will be assumed present and the following criteria apply:

Design approach velocity shall not exceed-

Streams and Rivers: 0.33 feet per second

Canals: 0.40 feet per second

Lakes, Reservoirs, Tidal: 0.33 feet per second (salmonids) (2)

2. Fingerling Criteria - 2.36 inches {60 mm} and longer

If biological justification can demonstrate the absence of fry-sized salmonids in the vicinity of the screen, the following criteria apply:

Design approach velocity shall not exceed -

All locations: 0.8 feet per second

3. The total submerged screen area required (excluding area of structural components) is calculated by dividing the maximum diverted flow by the allowable approach velocity. (Also see Section K,

Modified Criteria for Small Screens, part 1).

4. The screen design must provide for uniform flow distribution over the surface of the screen, thereby minimizing approach velocity. This may be accomplished by providing adjustable porosity control on the downstream side of the screens, unless it can be shown unequivocally (such as with a physical hydraulic model study) that localized areas of high velocity can be avoided at all flows.

C. Sweeping Velocity

Definition: Sweeping Velocity is the water velocity vector component parallel and adjacent to the screen face.

1. Sweeping Velocity shall be greater than approach velocity. For canal installations, this is accomplished by angling screen face less than 45 relative to flow (see Section K, Modified Criteria for Small Screens). This angle may be dictated by specific canal geometry, or hydraulic and sediment conditions.

D. Screen Face Material

1. Fry criteria

If a biological justification cannot demonstrate the absence of fry-sized salmonids in the vicinity of the screen, fry will be assumed present and the following criteria apply for screen material:

a. Perforated plate: screen openings shall not exceed 3/32 inches (2.38 mm), measured in diameter.

b. Profile bar: screen openings shall not exceed 0.0689 inches (1.75 mm) in width.

c. Woven wire: screen openings shall not exceed 3/32 inches (2.38 mm), measured diagonally. (e.g.: 6-14 mesh)

d. Screen material shall provide a minimum of 27% open area.

2. Fingerling Criteria

If biological justification can demonstrate the absence of fry-sized salmonids in the vicinity of the screen, the following criteria apply for screen material:

a. Perforated plate: Screen openings shall not exceed 1/4 inch (6.35 mm) in diameter.

b. Profile bar: screen openings shall not exceed 1/4 inch (6.35 mm) in width

c. Woven wire: Screen openings shall not exceed 1/4 inch (6.35 mm) in the narrow direction

d. Screen material shall provide a minimum of 40% open area.

3. The screen material shall be corrosion resistant and sufficiently durable to maintain a smooth and uniform surface with long term use.

E. Civil Works and Structural Features

1. The face of all screen surfaces shall be placed flush with any adjacent screen bay, pier noses, and walls, allowing fish unimpeded movement parallel to the screen face and ready access to bypass routes.

2. Structural features shall be provided to protect the integrity of the fish screens from large debris. Trash racks, log booms, sediment sluices, or other measures may be needed. A reliable on-going preventive maintenance and repair program is necessary to ensure facilities are kept free of debris and the screen mesh, seals, drive units, and other components are functioning correctly.

3. Screens located in canals - surfaces shall be constructed at an angle to the approaching flow, with the downstream end terminating at the bypass system entrance.

4. The civil works design shall attempt to eliminate undesirable hydraulic effects (e.g.- eddies, stagnant flow zones) that may delay or injure fish, or provide predator opportunities. Upstream training wall(s), or some acceptable variation thereof, shall be utilized to control hydraulic conditions and define the angle of flow to the screen face. Large facilities may require hydraulic monitoring to identify and correct areas of concern.

F. Juvenile Bypass System Layout

Juvenile bypass systems are water channels which transport juvenile fish from the face of a screen to a relatively safe location in the main migratory route of the river or stream. Juvenile bypass systems are necessary for screens located in canals because anadromous fish must be routed back to their main migratory route. For other screen locations and configurations, NMFS accepts the option which, in its judgement, provides the highest degree of fish protection given existing site and project constraints.

1. The screen and bypass shall work in tandem to move out-migrating salmonids (including adults) to the bypass outfall with minimum injury or delay. Bypass entrance(s) shall be designed such that out-migrants can easily locate and enter them. Screens installed in canal diversions shall be constructed with the downstream end of the screen terminating at a bypass entrance. Multiple bypass entrances (intermediate bypasses) shall be employed if the sweeping velocity will not move fish to the bypass within 60 seconds (3) assuming the fish are transported at this velocity. Exceptions will be made for sites without satisfactory hydraulic conditions, or for screens built on river banks with satisfactory river conditions.

2. All components of the bypass system, from entrance to outfall, shall be of sufficient hydraulic capacity to minimize the potential for debris blockage.

3. To improve bypass collection efficiency for a single bank of vertically oriented screens, a bypass training wall may be located at an angle to the screens.

4. In cases where insufficient flow is available to satisfy hydraulic requirements at the main bypass entrance(s), a secondary screen may be required. Located in the main screen's bypass channel, a secondary screen allows the prescribed bypass flow to be used to effectively attract fish into the bypass entrance(s) while allowing all but a reduced residual bypass flow to be routed back (by pump or gravity) for the primary diversion use. The residual bypass flow (not passing through the secondary screen) then conveys fish to the bypass outfall location or other destination.

5. Access is required at locations in the bypass system where debris accumulation may occur.

6. The screen civil works floor shall allow fish to be routed to the river safely in the event the canal is dewatered. This may entail a sumped drain with a small gate and drain pipe, or similar provisions.

G. Bypass Entrance

1. Each bypass entrance shall be provided with independent flow control, acceptable to NMFS.

2. Bypass entrance velocity must equal or exceed the maximum velocity vector resultant along the screen, upstream of the entrance. A gradual and efficient acceleration into the bypass is required to minimize delay of out-migrants.

3. Ambient lighting conditions are required from the bypass entrance to the bypass flow control.

4. The bypass entrance must extend from floor to water surface.

H. Bypass Conduit Design

1. Smooth interior pipe surfaces and conduit joints shall be required to minimize turbulence, debris accumulation, and the risk of injury to juvenile fish. Surface smoothness must be acceptable to the NMFS.

2. Fish shall not free-fall within a confined shaft in a bypass system.

3. Fish shall not be pumped within the bypass system.

4. Pressure in the bypass pipe shall be equal to or above atmospheric pressure.

5. Extreme bends shall be avoided in the pipe layout to avoid excessive physical contact between small fish and hard surfaces and to minimize debris clogging . Bypass pipe centerline radius of curvature (R/D)
shall be 5 or greater. Greater R/D may be required for supercritical velocities.

6. Bypass pipes or open channels shall be designed to minimize debris clogging and sediment deposition and to facilitate cleaning. Pipe diameter shall be 24 inches (0.610 m) or greater and pipe velocity shall
be 2.0 fps (0.610 mps) or greater, unless otherwise approved by NMFS. (See Modified Criteria for Small Screens) for the entire operational range.

7. No closure valves are allowed within bypass pipes.

8. Depth of flow in a bypass conduit shall be 0.75 ft. (0.23 m) or greater, unless otherwise authorized by NMFS (See Modified Criteria for Small Screens).

9. Bypass system sampling stations shall not impair normal operation of the screen facility.

10. No hydraulic jumps should exist within the bypass system.

I. Bypass Outfall

1. Ambient river velocities at bypass outfalls should be greater than 4.0 fps (1.2 mps), or as close as obtainable.

2. Bypass outfalls shall be located and designed to minimize avian and aquatic predation in areas free of eddies, reverse flow, or known predator habitat.

3. Bypass outfalls shall be located where there is sufficient depth (depending on the impact velocity and quantity of bypass flow) to avoid fish injuries at all river and bypass flows.

4. Impact velocity (including vertical and horizontal components) shall not exceed 25.0 fps (7.6 mps).

5. Bypass outfall discharges shall be designed to avoid adult attraction or jumping injuries.

J. Operations and Maintenance

1. Fish Screens shall be automatically cleaned as frequently as necessary to prevent accumulation of debris. The cleaning system and protocol must be effective, reliable, and satisfactory to NMFS. Proven cleaning technologies are preferred.

2. Open channel intakes shall include a trash rack in the screen facility design which shall be kept free of debris. In certain cases, a satisfactory profile bar screen design can substitute for a trash rack.

3. The head differential to trigger screen cleaning for intermittent type systems shall be a maximum of 0.1 feet (.03 m), unless otherwise agreed to by NMFS.

4. The completed screen and bypass facility shall be made available for inspection by NMFS, to verify compliance with design and operational criteria.

5. Screen and bypass facilities shall be evaluated for biological effectiveness and to verify that hydraulic design objectives are achieved.

K. Modified Criteria for Small Screens (Diversion Flow less than 40 cfs)

The following criteria vary from the standard screen criteria listed above. These criteria specifically apply to lower flow, surface-oriented screens (e.g.- small rotating drum screens). Forty cfs is the approximate cut off; however, some smaller diversions may be required to apply the general criteria listed above, while some larger diversions may be allowed to use the "small screen" criteria below. NMFS will decide on a case-by-case basis depending on site constraints.

1. The required screen area is a function of the approach velocity listed in Section B, Approach Velocity, Parts 1, 2, and 3 above. Note that "maximum" refers to the greatest flow diverted, not necessarily the water right.

2. Screen Orientation:

a. For screen lengths six feet or less, screen orientation may be angled perpendicular to the flow.

b. For screen lengths greater than six feet, screen-to-flow angle must be less than 45 degrees. (See Section C Sweeping Velocity, part 1).

c. For drum screens, design submergence shall be 75% of drum diameter. Submergence shall not exceed 85%, nor be less than 65% of drum diameter.

d. Minimum bypass pipe diameter shall be 10 in (25.4 cm), unless otherwise approved by NMFS.

e. Minimum pipe depth is 1.8 in (4.6 cm) and is controlled by designing the pipe gradient for minimum bypass flow.

Questions concerning this document can be directed to NMFS Hydraulic Engineering Staff at:

National Marine Fisheries Service

Southwest Region

777 Sonoma Ave. Room 325

Santa Rosa, CA 95402

Phone: 707-575-6050

Adopted,

Date:

Authorizing Signature:

1. Adapted from NMFS, Northwest Region

2. Other species may require different approach velocity standards, e.g.- in California, the U.S. Fish & Wildlife Service requires 0.2 fps approach velocity where delta smelt are present in the tidal areas of the San Francisco Bay estuary.

3. In California, 60 second exposure time applies to screens in canals, using a 0.4 fps approach velocity. Where more conservative approach velocities are used, longer exposure times may be approved on a

case-by-case basis, and exceptions to established criteria shall be treated as variances.

Policies
Habitat Conservation Division
Southwest Region Home Page