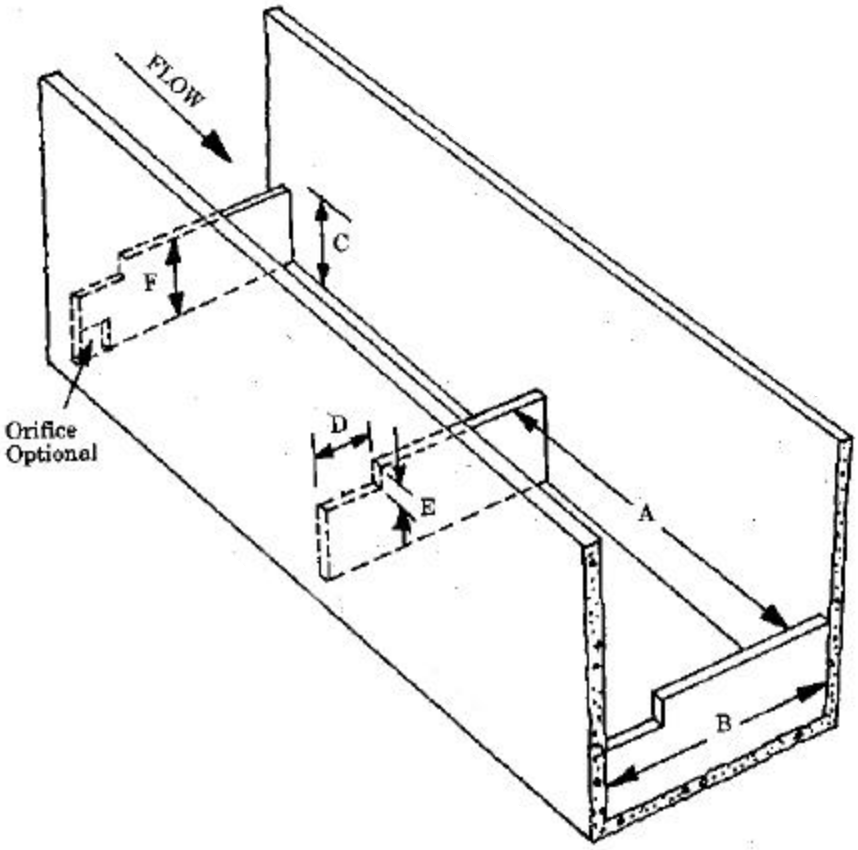

A	Pool Length	6′	8′	10′
B	Pool Width	4′	6′	8′
C	Water Depth	3′	4′	6′
D	Slot Width	.5′	.5′	.5′
E	Slot Depth	.5′	.5′	.5′
F	Baffle Height	2.5′	3.5′	5.25′
	Water Depth in Notch	12″	12″	15″
	Discharge in CFS Min	1.65	4.0	4.0
	Normal	5.0	12.3	25.0
	Max.	24.0	36.0	48.0
	Drop Per Pool	1′	1′	1′

Source: USACO Fisheries Handbook

MBK ENGINEERS
2450 Alhambra Boulevard, 2nd Floor
Sacramento, California 95817
(916) 456-4400

Hayer Dam Modification Feassibity Study

Pool & Weir Fish Passage Ladder

Figure 3-1