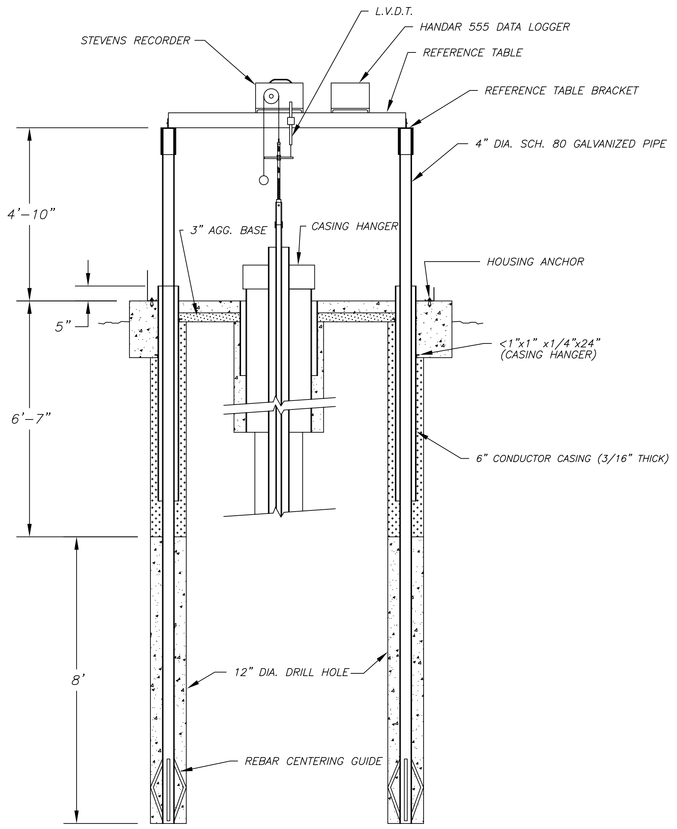

NOTE: Extensometer tension lever and pedistal are not shown, see detail x-x.

SECTION A-A
SCALE: 1"=2'

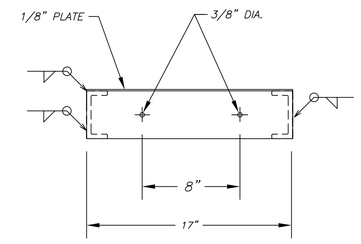

END SECTION

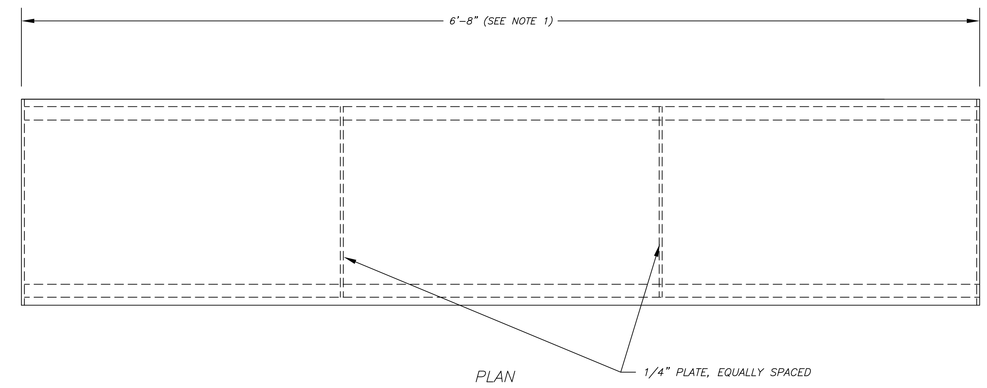

PLAN

REFERENCE TABLE
SCALE: 1"=6"

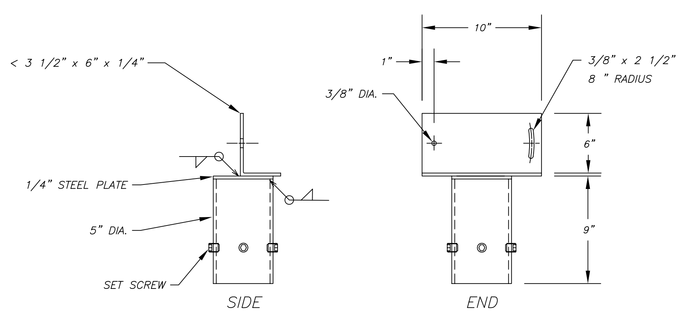

REFERENCE TABLE BRACKET DETAIL
SCALE: 1"=6"

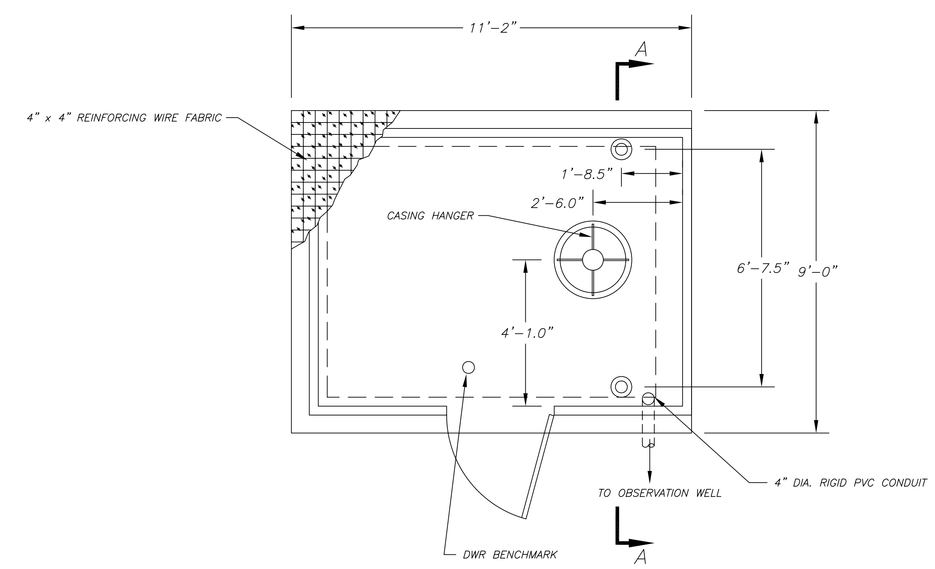

BUILDING FLOOR PLAN
SCALE: 1"=2'

NOTES

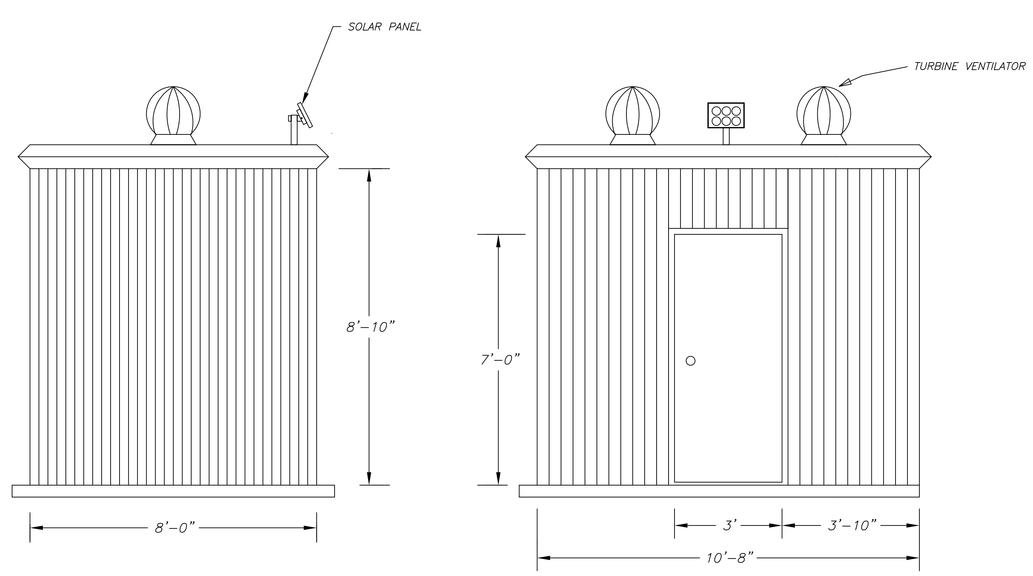

BUILDING
SCALE: 1"=2'

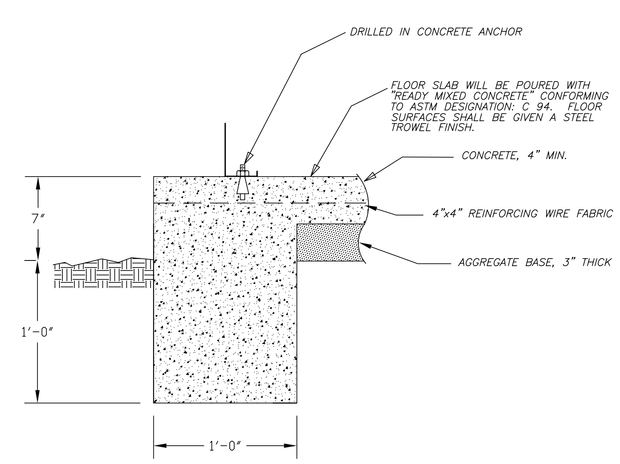

HOUSING ANCHOR DETAIL
SCALE: 1"=6"

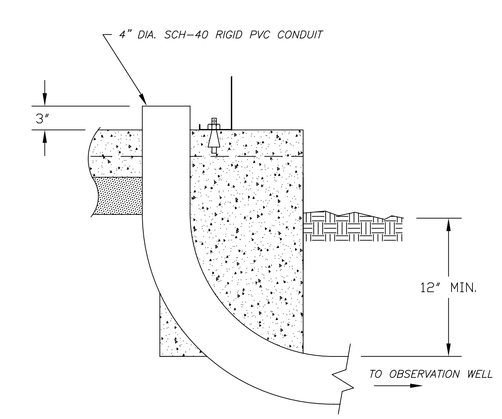

PVC CONDUIT TO PIEZOMETER
SCALE: 1"=6"

STATE OF CALIFORNIA
THE RESOURCES AGENCY
DEPARTMENT OF WATER RESOURCES
DIVISION OF LOCAL ASSISTANCE
CENTRAL DISTRICT

AMERICAN BASIN
CONJUNCTIVE USE PROJECT

EXTENSOMETER

AS-BUILT

DESIGNED BY:	DATE:	APPROVAL RECOMMENDED:	DATE:
TOCCOY DUDLEY	7/22/91		
JAN SWEIGERT	7/22/91	APPROVED BY:	DATE:
TIM TALBERT	10/25/94	DRAWING NO.	SHEET NO. C 1

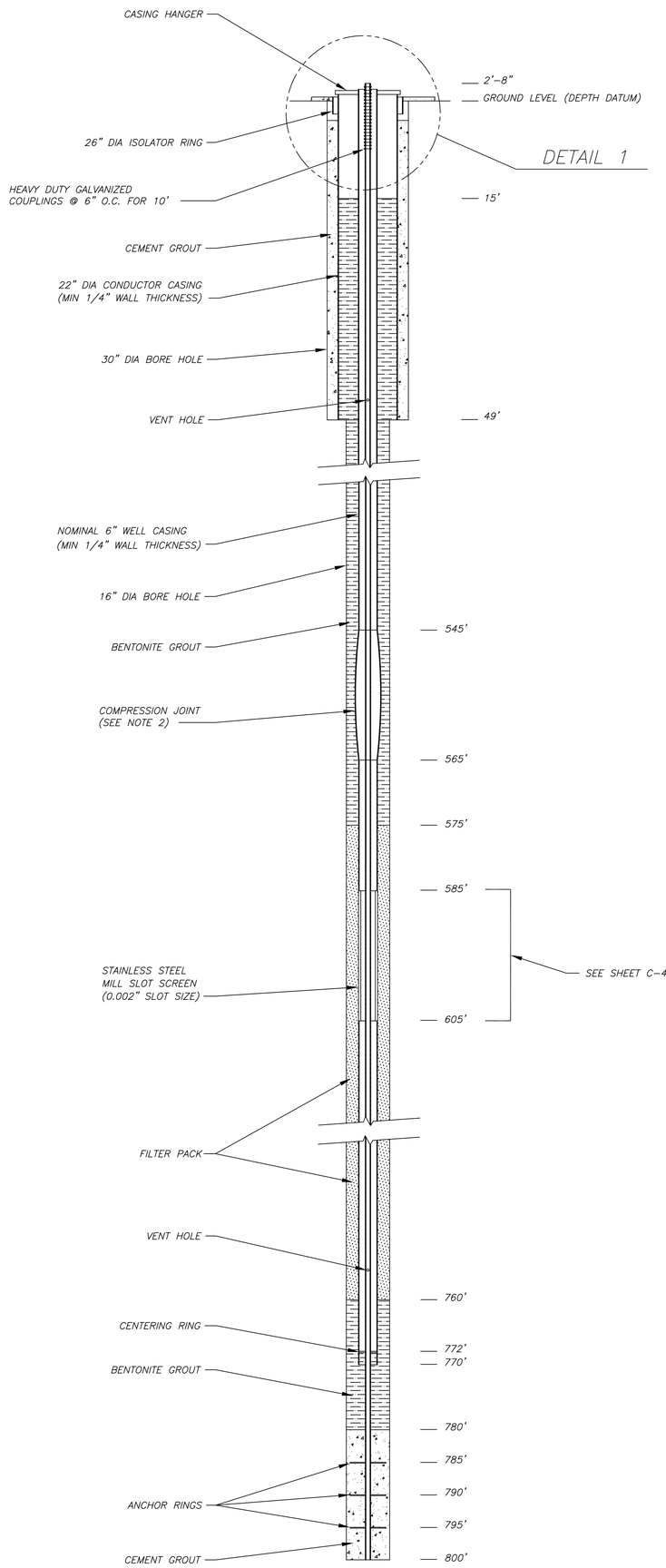

NOTE: Interfaces of soil materials shown above are not to scale. Depths of interfaces will be determined during drilling by the field geologist.

EXTENSOMETER ELEMENT

SCALE: HORIZONTAL 1" = 2'
VERTICAL 1" = 10'

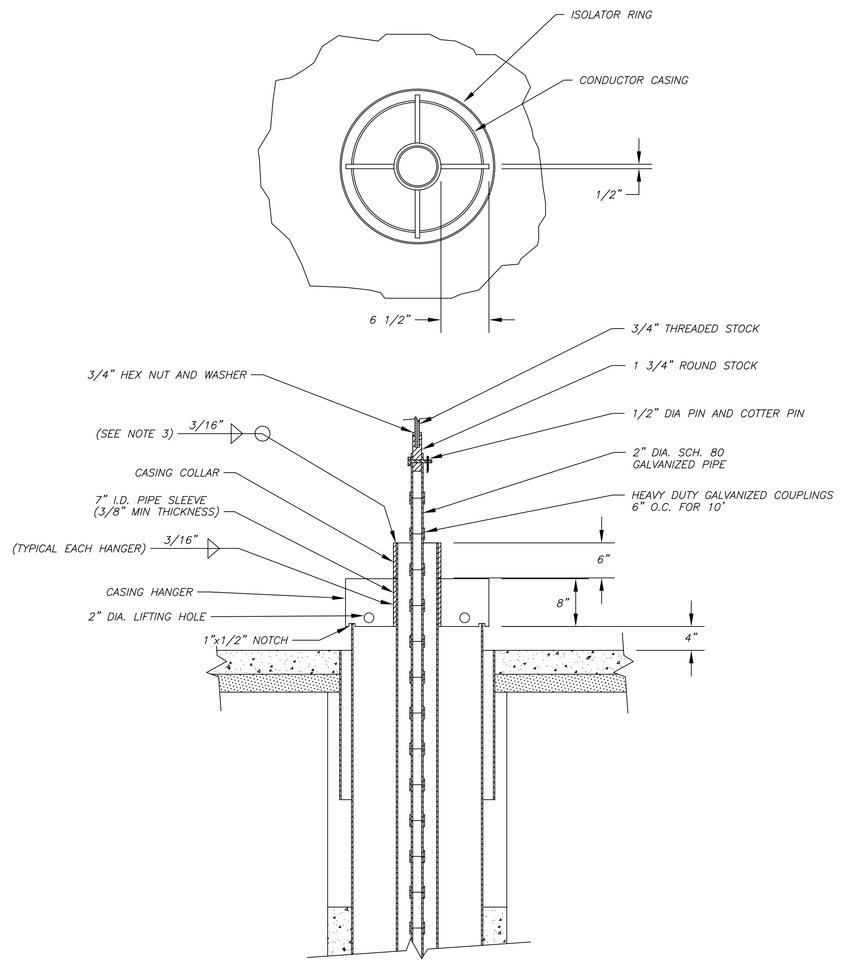

DETAIL 1

SCALE: 1"=1'

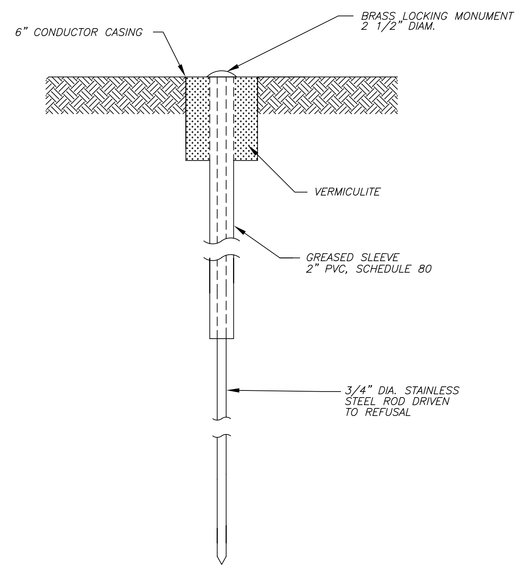

GPS BENCHMARK DETAIL

SCALE: 1"=6"

(SEE NOTE 1)

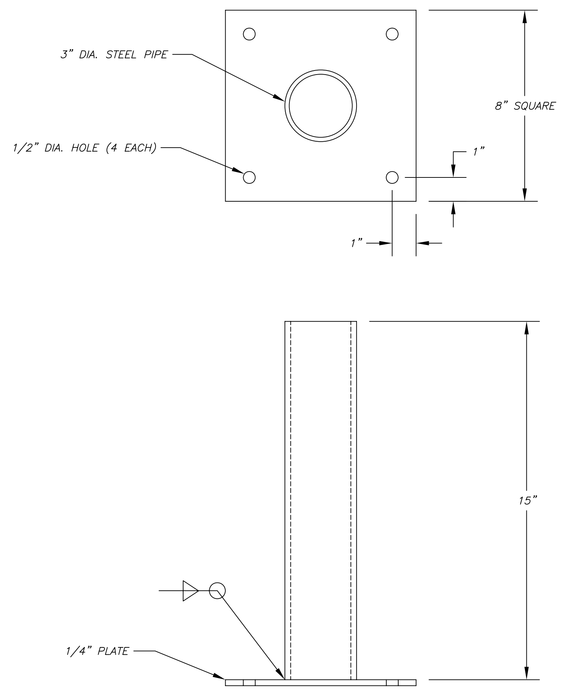

NOTE: PAINT ALL SURFACES WITH RUST RESISTANT PAINT.

SOLAR PANEL BRACKET

SCALE: 1"=3"

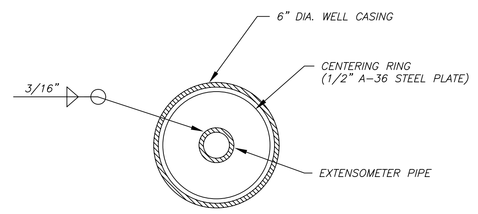

CENTERING RING DETAIL

SCALE: 1"=1'

NOTES

1. BENCHMARK WILL BE INSTALLED IN GROUND AT A LOCATION SUITABLE FOR GPS SATELLITE COLLECTION.
2. RASCO MOSS COMPRESSION JOINT.
3. GRIND COLLAR FLAT TO MATCH VANES BEFORE WELDING.

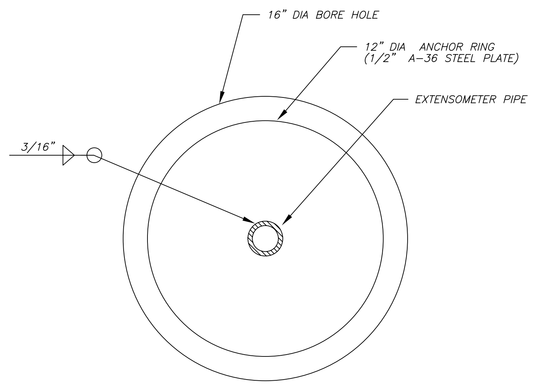

ANCHOR RING DETAIL

SCALE: 1"=4"

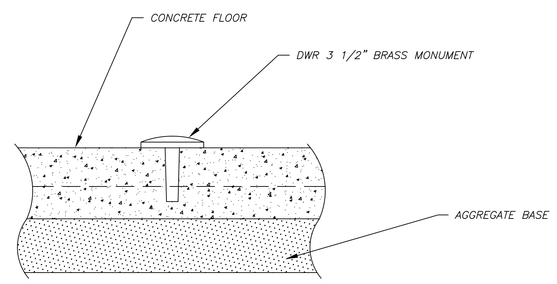

BENCHMARK DETAIL

SCALE: 1"=4"

STATE OF CALIFORNIA
THE RESOURCES AGENCY
DEPARTMENT OF WATER RESOURCES
DIVISION OF LOCAL ASSISTANCE
CENTRAL DISTRICT

AMERICAN BASIN
CONJUNCTIVE USE PROJECT

EXTENSOMETER

AS-BUILT

DESIGNED BY:	DATE:	APPROVAL RECOMMENDED:	DATE:
TOCCOY DUDLEY	7/22/91		
JAN SWEIGERT	7/22/91	APPROVED BY:	DATE:
TIM TALBERT	10/25/94	DRAWING NO.	SHEET NO. C 2

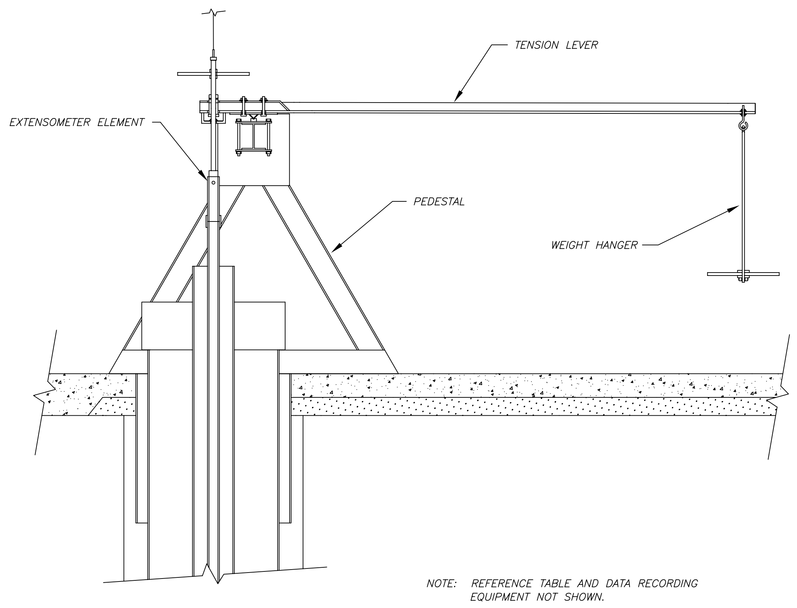

TENSION LEVER & PEDESTAL DETAIL
SCALE: 1"=12"

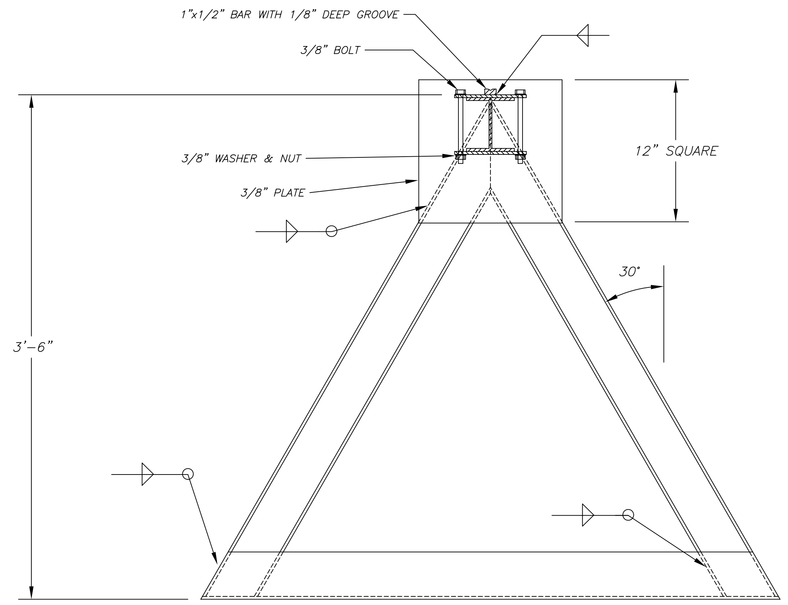

TENSION LEVER SECTION A-A
SCALE: 1"=6"

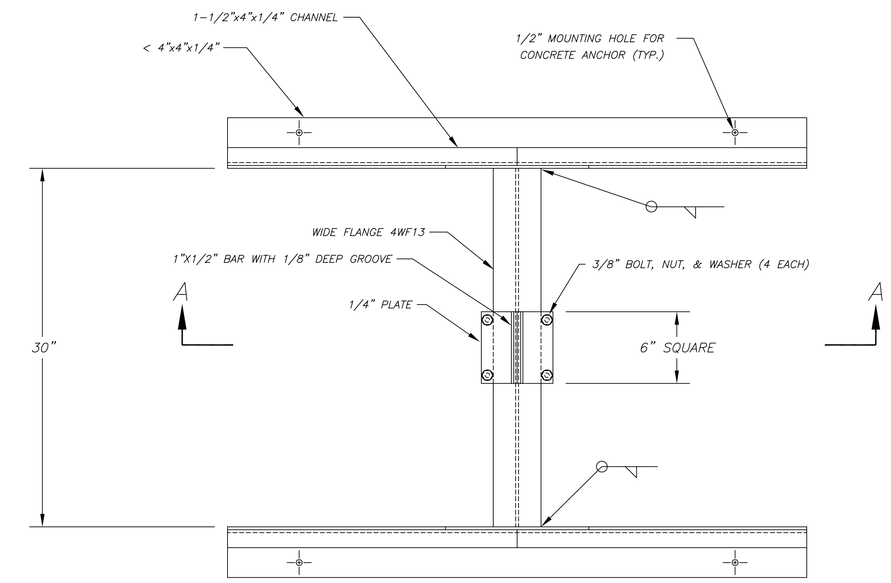

TENSION LEVER PEDESTAL DETAIL
SCALE: 1"=6"

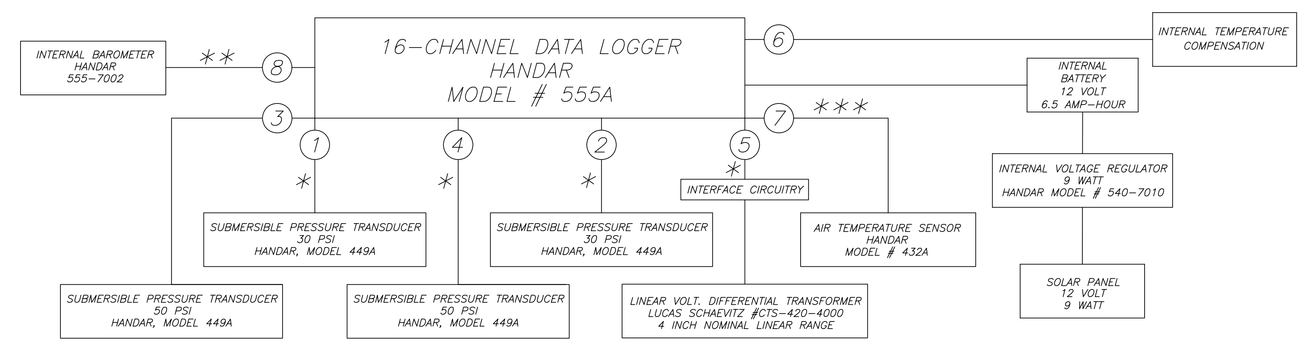

* 4-20ma CURRENT LOOP CONNECTION
** 0-5V DIFFERENTIAL VOLTAGE CONNECTION
*** 5V SINGLE-ENDED CONNECTION WITH PULL-UP RESISTOR
(#) CHANNEL NUMBER

INSTRUMENTATION SCHEMATIC

NOTES

1. FINAL DIMENSION FOR REFERENCE TABLE TO BE DETERMINED AFTER REFERENCE TABLE SUPPORTS ARE IN PLACE.

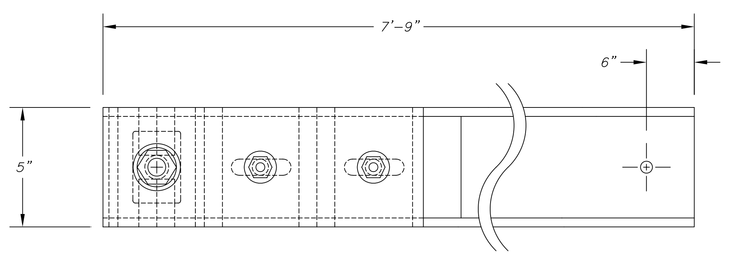

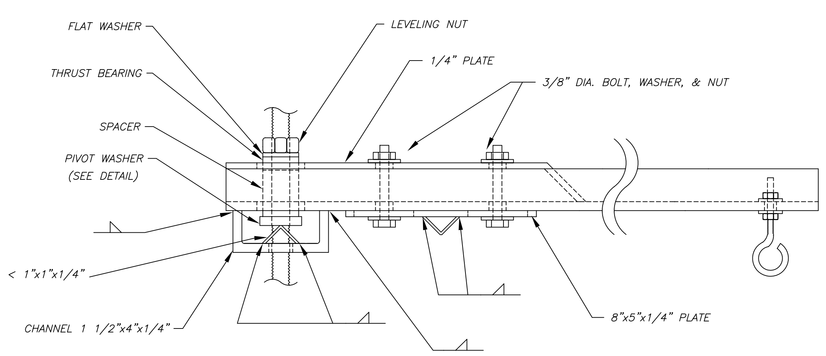

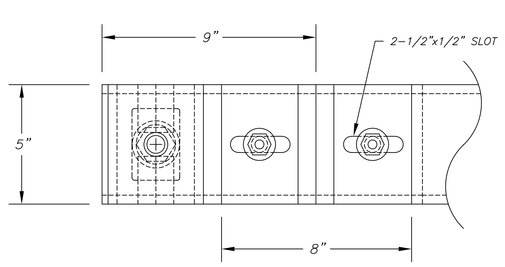

TENSION LEVER DETAIL
SCALE: 1"=3"

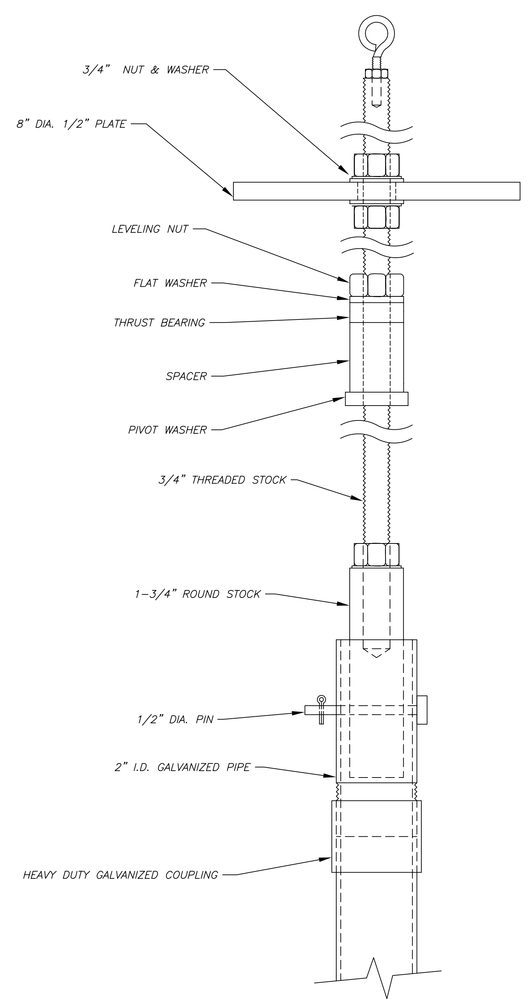

NOTE: TENSION LEVER NOT SHOWN

CONNECTOR DETAIL
SCALE: 1"=2"

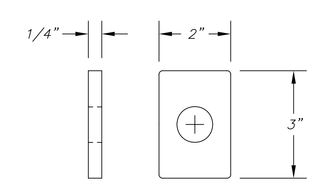

PIVOT WASHER
SCALE: 1"=2"

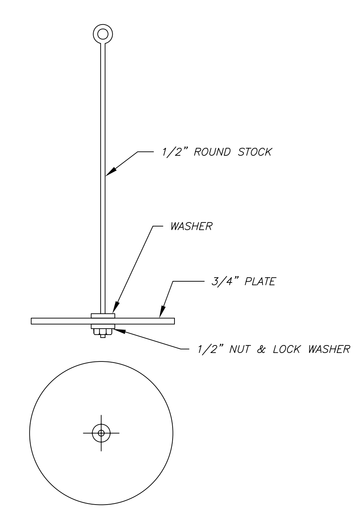

WEIGHT HANGER DETAIL
SCALE: 1"=6"

STATE OF CALIFORNIA
THE RESOURCES AGENCY
DEPARTMENT OF WATER RESOURCES
DIVISION OF LOCAL ASSISTANCE
CENTRAL DISTRICT

AMERICAN BASIN
CONJUNCTIVE USE PROJECT

EXTENSOMETER

AS-BUILT

DESIGNED BY:	DATE:	APPROVAL RECOMMENDED:	DATE:
TOCCOY DUDLEY	7/22/91		
JAN SWEIGERT	7/22/91	APPROVED BY:	DATE:
TIM TALBERT	10/25/94	DRAWING NO.	SHEET NO. C 3

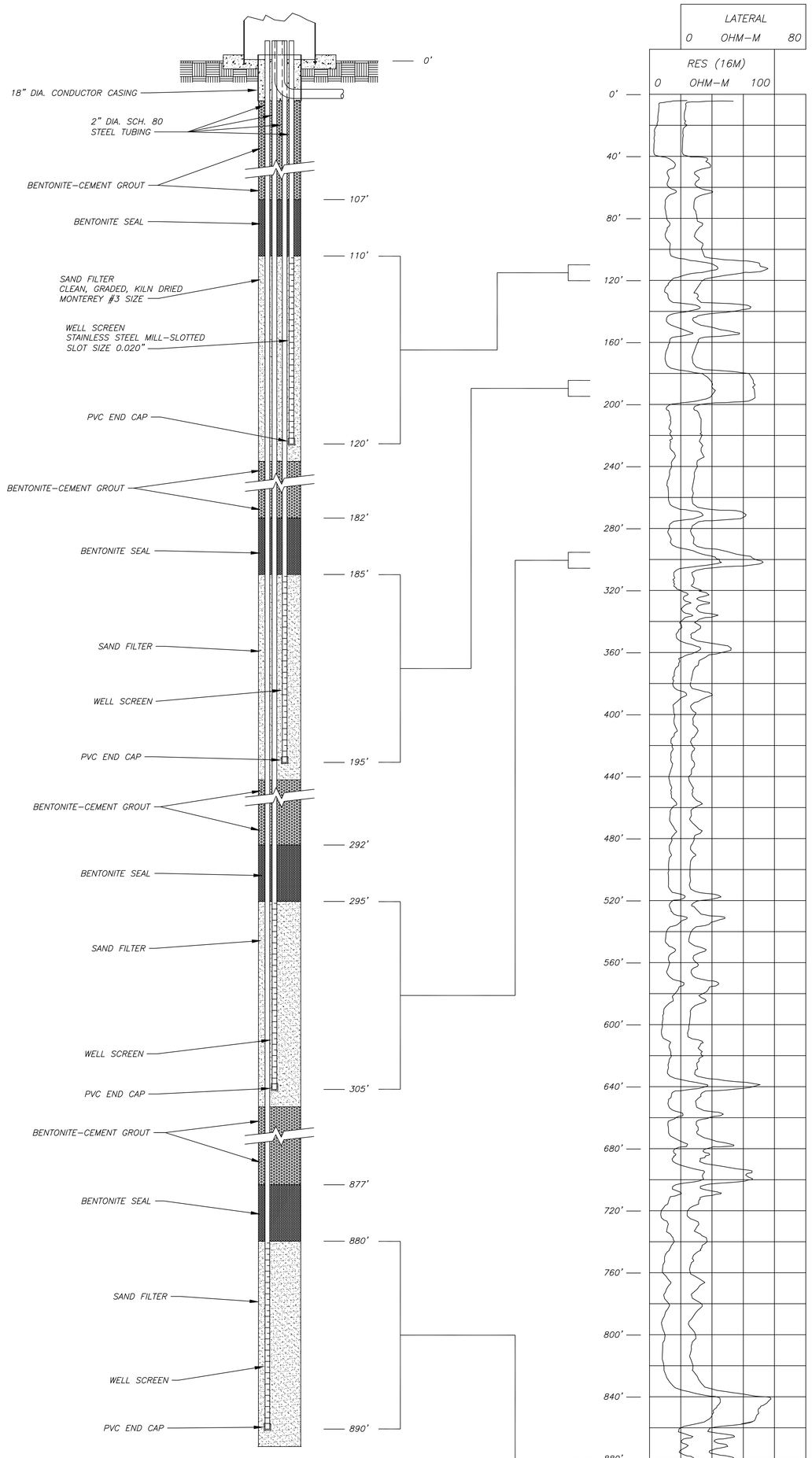

OBSERVATION WELL

SCALE: HORIZ. 1"=6"
VERT. 1"=3'

ELECTRIC LOG

SEE SHEET C-2 FOR
EXTENSOMETER SCREEN DETAIL
(SEE NOTE 1)

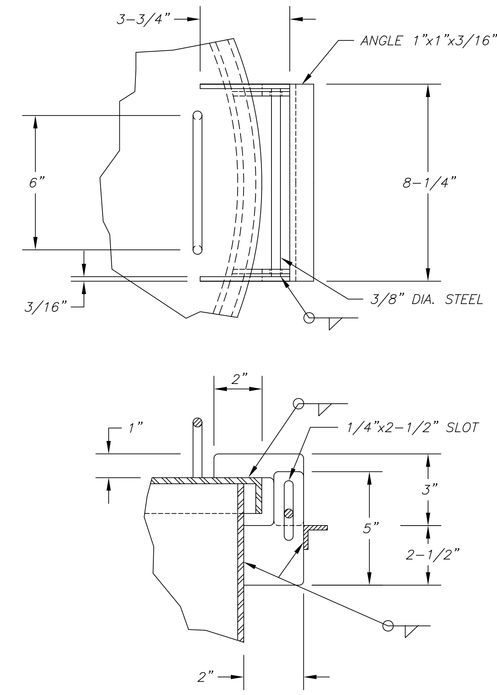

HINGE DETAIL

SCALE: 1"=3"

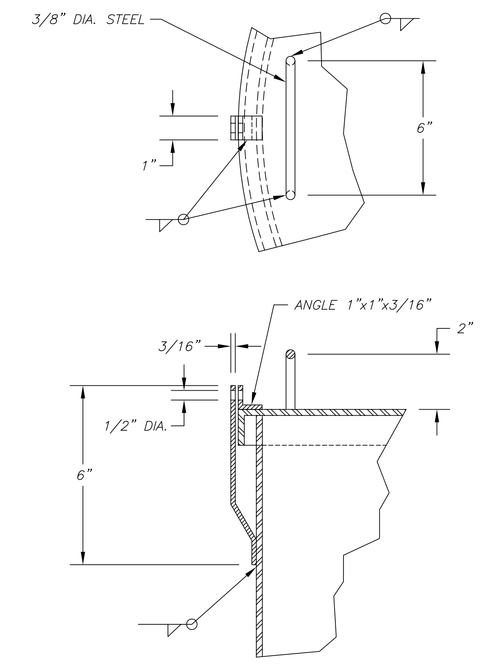

LOCK DETAIL

SCALE: 1"=3"

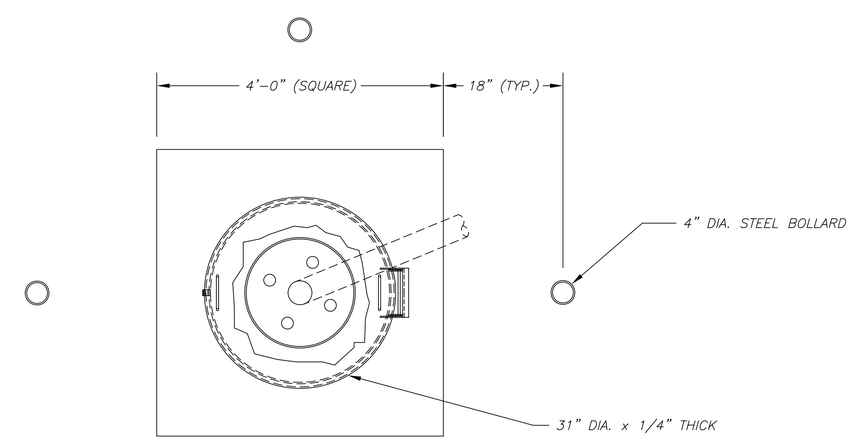

NOTES

1. DRILLING FLUID PLUGGED FORMATION DURING CONSTRUCTION. MEASURED WATER LEVELS ARE NOT REPRESENTATIVE.

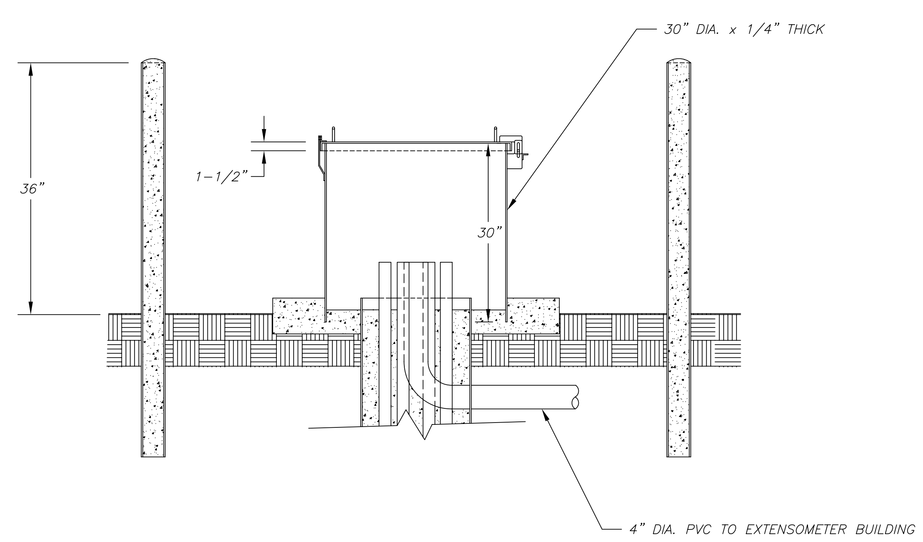

DETAIL 1

SCALE: 1"=12"

STATE OF CALIFORNIA
THE RESOURCES AGENCY
DEPARTMENT OF WATER RESOURCES
DIVISION OF LOCAL ASSISTANCE
CENTRAL DISTRICT

AMERICAN BASIN
CONJUNCTIVE USE PROJECT

EXTENSOMETER

AS-BUILT

DESIGNED BY:	DATE:	APPROVAL RECOMMENDED:	DATE:
TOCCOY DUDLEY	7/22/91		
JAN SWEIGERT	7/22/91	APPROVED BY:	DATE:
TIM TALBERT	10/25/94	DRAWING NO.	SHEET NO. C 4