FF/BIO 4ATR/87-14

THE EFFECTS OF TRASHRACK AND BYPASS DESIGN AND PREDATOR CONTROL ON PREDATION LOSSES OF JUVENILE CHINOOK SALMON AT HALLWOOD-CORDUA FISH SCREEN

ROBERT M. KANO
Department of Fish and Game

Technical Report 14

November 1987

A Cooperative Study by the:
CALIFORNIA DEPARTMENT OF WATER RESOURCES
CALIFORNIA DEPARTMENT OF FISH AND GAME
STATE WATER RESOURCES CONTROL BOARD
U.S. FISH AND WILDLIFE SERVICE
U.S. BUREAU OF RECLAMATION
U.S. GEOLOGICAL SURVEY

Technical Report 14
FF/BIO 4ATR/87-14

THE EFFECTS OF TRASHRACK AND BYPASS DESIGN AND PREDATOR CONTROL ON PREDATION LOSSES OF JUVENILE CHINOOK SALMON AT HALLWOOD-CORDUA FISH SCREEN

By

Robert M. Kano
Department of Fish and Game

November 1987

ABSTRACT

Fluorescent spray-dyed chinook salmon were used to evaluate predation losses at the Hallwood-Cordua fish screen. Tests were conducted to determine losses at trashracks with 6-inch and 12-inch bar spacings, and when no trashrack was present. Tests were with a bypass system that exited the fish screen at 90 degrees to the water flow and with a bypass aligned with the flow. Predator removal by electroshocking was also evaluated.

Losses were significantly greater for salmon passing through the trashracks (13.0-28.0 percent) than when no trashrack was present (10.7-10.9 percent). Predation losses were not significantly different between trashracks with 6-inch (20.5-26.6 percent and 12-inch (20.8-26.3 percent) bar spacings. Significantly lower losses of marked salmon resulted when the bypass was in line with the water flow (6.1-7.6 percent) than when the 90 degree configuration was used (10.1-14.3 percent). Removal of predators from the fish screen reduced losses of salmon by about 4 percent.

ACKNOWLEDGEMENTS

Don Schlicting and Richard Thompson at Feather River Hatchery provided test fish. Jack Hanson (Inland Fisheries Branch) and Alan Baracco provided marking materials and equipment and aided in fish marking. Personnel of Elk Grove Screen Shop helped throughout the testing. Ron Lunsford and Jim Gibboney of the Department of Water Resources Central District provided invaluable design and construction expertise. Alan Pickard and Alan Baracco assisted in planning and carrying out the study.

Barry Collins and Dan Odenweller edited this report. Janet Boranian, Helen Hardy, and Ann Eden typed the manuscript.

CONTENTS

ABSTRACT iii

ACKNOWLEDGEMENTS v

Chapter 1. INTRODUCTION 1

Chapter 2. METHODS AND MATERIALS 3

Trashrack Evaluations 3
Bypass Evaluations 4
Predator Control Evaluations 4

Chapter 3. RESULTS 7

Trashrack Evaluations 7
Bypass Evaluations 8
Predator Control Evaluation 8

Chapter 4. DISCUSSION 15

REFERENCES 17

Figures

1 Diagram of the Hallwood-Cordua Fish Screen System 1

2 Locations of Old and New Trashracks 3

3 Configurations of Old and Modified Bypass Systems 4

4 Plan and Cross Section of Electrode Placement for Electrofishing System 5

Tables

1 Release and Recovery Data for Marked Chinook Salmon, and Chi-Square Analysis for 1980 Hallwood-Cordua Trashrack Evaluations 10

2 Release and Recovery Data for Marked Chinook Salmon, and Chi-Square Analysis for 1981 Hallwood-Cordua Trashrack Evaluations 11

3 Release and Recovery Data for Marked Chinook Salmon, and Chi-Square Analysis for 1980 and 1981 Hallwood-Cordua Trashrack Evaluations 12

4 Release and Recovery Data for Marked Chinook Salmon, and Chi-Square Analysis for 1981 Hallwood-Cordua Predator Control Evaluation 13

5 Numbers and Mean Sizes of Sacramento Squawfish and Steelhead Rainbow Trout Caught by Electrofishing During Hallwood-Cordua Trashrack Evaluations 14

Chapter 1. INTRODUCTION

The potential loss of juvenile fish to predation is a serious consideration in the design and operation of fish screens. Concentration and stressing of small fish near screens and accumulation of predator fish around screen structures are undesirable effects of the diversion and screening of water. Conditions that increase prey vulnerability or enhance predator opportunities must be understood to develop facilities that minimize losses.

During the summers of 1980 and 1981, the Department of Fish and Game investigated the effects of fish screen design on losses of juvenile chinook salmon (Oncorhynchus tshawytscha) at the Hallwood-Cordua fish screen on the Yuba River near Marysville, California (Figure 1).

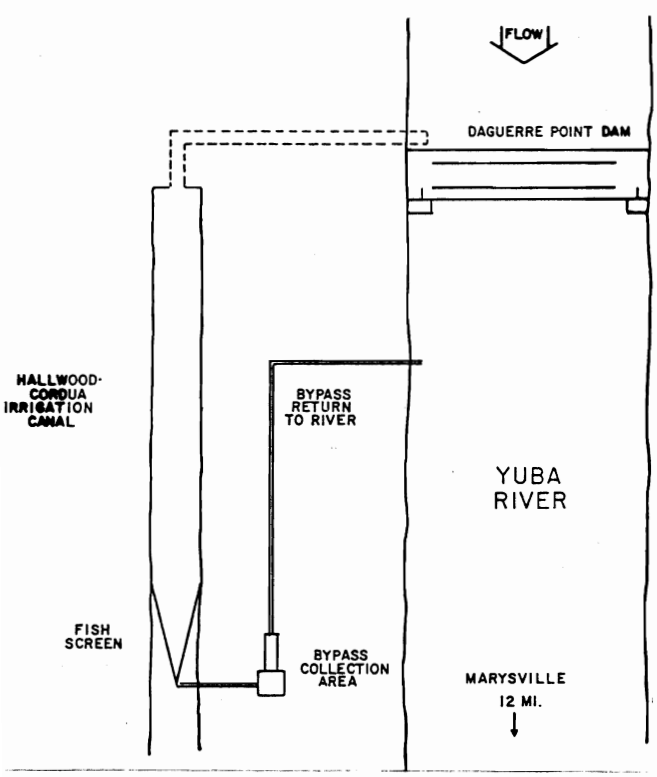

Figure 1. DIAGRAM OF THE HALLWOOD-CORDUA FISH SCREEN SYSTEM (Not to Scale)

The fish screen is in a diversion channel, and consists of vertical aluminum perforated plates forming a "V", with the wide end facing upstream. At the downstream end of the "V", fish are bypassed from the screen into a collection trough. A more detailed description of the screen and its operation is contained in a report of evaluations conducted in 1977 and 1978 (Hall 1979). Results of that study revealed significant losses near the fish screen of downstream migrant chinook salmon. Losses were attributed to predation, as large numbers of juvenile salmon accumulated and appeared to become disoriented in the narrow portion of the screen.

Trashrack and bypass designs were identified as probable factors contributing to predation losses. The trashrack was in the transition area between the screen and the bypass, and consisted of steel bars spaced 1 inch apart. The location and bar spacing of this trashrack may have posed a behavioral barrier, delaying fish movement into the bypass section. Hansen and Li (1983) found that chinook salmon fingerlings exhibited negative responses to passage through trashracks with bar spacings less than 6 inches apart.

Fish were bypassed out of the screen through an 8 inch I.D. line, which exited the screen near the bottom of the channel, and was oriented at 90 degrees to the flow of water. This exit location may have made it difficult for fish to find the bypass. The bypass design depended on gravity flow to create attracting velocities. During normal operation of the fish screen, debris that accumulated on the screen surfaces in the bypass was not removed. This procedure increased the head in this area so maximum velocity through the

exit could be maintained. However, reducing the screen open area in the bypass disrupted water movement, which was characterized by a "rollback" of water extending upstream of the trashrack.

The "rollback" phenomenon and the associated predation loss potential was similar (but on a smaller scale) to that observed below the Red Bluff Diversion Dam on the Sacramento River near Red Bluff (F.A. Hall, Memorandum to Department of Fish and Game, Bay Delta Predation Files). In the Hallwood-Cordua fish screen, the "rollback" disoriented salmon moving downstream, and along with the configuration of the bypass exit, increased transit time through the screen.

Large numbers of predators were observed near the fyke of the screen. The primary predator fish in the diversion canal was the Sacramento squawfish (Ptychocheilus grandis). Squawfish were seen downstream of schools of salmon at the upstream face of the screen, as well as holding near the trashrack. This genus has been recognized as an opportunistic predator when large numbers of juvenile salmonids have been artifically concentrated or stressed (Brown and Moyle, 1981). Predation by northern squawfish (Ptychocheilus oregonensis) has accounted for much of the loss of hatchery released salmon fry in Oregon (Zimmer, 1953) and Idaho (McPhee and Reid, 1971).

This report describes tests conducted to determine effects that changes in the Hallwood-Cordua trashrack and bypass would have on predation losses. The primary intent of screen modifications was to eliminate delay in movement of salmon past the screen. Predator removal from a portion of the diversion channel was also attempted. Each modification and the predator control was evaluated by release and recovery of marked chinook salmon.

Chapter 2. METHODS AND MATERIALS

Juvenile chinook salmon were obtained from Feather River Hatchery in Oroville. Fish were selected from the fall run production stock (1979 and 1980 brood years) raised under normal hatchery procedures.

Salmon were marked at the hatchery with fluorescent pigment dye applied by high pressure spray, following methods presented by Phinney et al (1967). Each year, separate groups of fish were marked with red, green, or yellow pigment. Fish were marked 2 weeks before the tests to allow marking mortality to stabilize. Retention of the color pigment was checked throughout the testing period to adjust the estimated numbers of marked fish released.

After marking, salmon were held at the hatchery until needed for a test. Each test used a randomly selected portion of the marked fish, which was transported to the study area in aerated tanks. Two color groups were used for a test. One color (test group) was released upstream of the area where losses were to be evaluated, and the second color (control group) was released downstream. Both groups were released simultaneously by transferring fish from the tanks to the channel in 5-gallon buckets.

Depending on objectives of a particular test, fish were released during the day or at night. When both day and night tests were made, night releases were about 36 hours after day test releases. Evaluations of each screen modification were separated by several days to allow maximum recovery of test fish.

Chinook salmon recovered after passing through the screen facility were examined under an ultraviolet lamp for fluorescent markers. A single adhering particle of pigment was the criterion for judging a fish to be marked. Marked salmon, identified by color, were counted, and fork lengths (FL) measured to the nearest millimeter.

Trashrack Evaluations

The original trashrack, located in the screen apex, was replated by a structure built 59 feet upstream from the mouth of the fish screen (Figure 2).

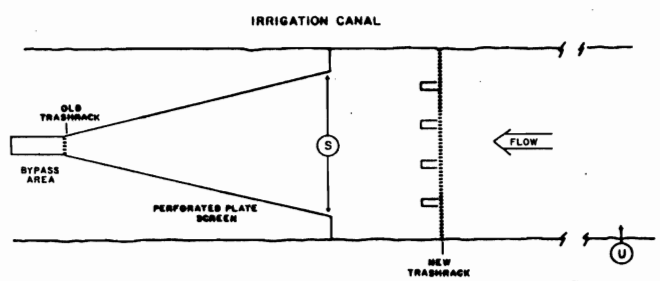

S = Group Released Across Mouth of Screen
U = Group Released Upstream of the Screen

Figure 2. LOCATIONS OF OLD AND NEW TRASHRACKS (Not to Scale)

The new trashrack, covering the entire width and depth of the diversion canal, consisted of five vertical panels of hollow stainless steel bars. Each bar was 3/4 inch wide and 3 inches long. Trashrack panels with the bars spaced either 6 inches or 12 inches apart were used.

In 1980, a series of tests was conducted to evaluate predation losses of salmon encountering the 6-inch-spaced trashrack. One test was done to determine if school size affected trashrack losses. Fish were released at night either in a large group at one

time (mass release) or in smaller groups over a longer period (dribbled releases of about 50 fish every 15 minutes). A second test was done to compare recoveries of day and night dribble-released fish.

In a separate series of tests, salmon losses were evaluated when no trashrack bars were present, using both day and night releases. For all trashrack tests, one group of marked salmon was released into the channel 250 feet upstream of the fish screen and a second group was released across the mouth of the screen.

Bypass Evaluations

Changes in the screen bypass were made to reduce delay of fish in the screen caused by the rollback of water and to make the bypass exit more accessible. A new bypass, positioned higher in the water column and aligned with the flow was constructed by extending the downstream end of the fish screen (Figure 3).

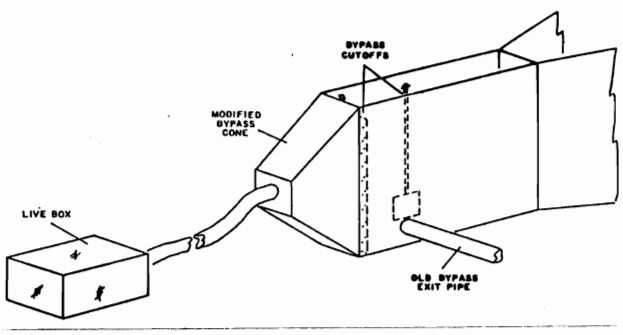

Figure 3. CONFIGURATIONS OF OLD AND MODIFIED BYPASS SYSTEMS (Not to Scale)

The extension was a flattened cone 11.3 feet long and 1.75 feet wide. The cone tapered from a height of 7.75 feet at its attachment to the screen, to 0.9 feet at the end. The sides of the cone consisted of sheet metal, and the upper and lower sloped surfaces were aluminum perforated plate screening with 5/32-inch holes on 7/32-inch centers. An 8-inch flex hose led fish from the cone to a floating live box for recovery.

In 1980 tests were run to compare the effects of bypass configurations. During these tests, the modified bypass cone was positioned so that the exit was just below the water surface. In this position, the cone guided fish toward the surface before they reached the exit. A perforated plate cutoff screen was placed at the opening of the cone during tests of the original bypass. Marked salmon were released in mass groups at night. One color group was distributed across the mouth of the screen; the second group was introduced into the bypass area downstream of the "rollback" of water.

In 1981 the cone of the modified bypass was lowered 3.5 feet, placing the bypass exit at about mid-depth in the channel. The cone forced fish to either surface or sound, depending on their position in the water column, before reaching the exit. Tests were conducted to compare salmon losses for this configuration to that of the old bypass. Releases were made both during the day and at night to test each bypass. Locations and methods of release were similar to those used in the 1980 tests.

Predator Control Evaluations

Removal of predators from the Hallwood-Cordua diversion was limited to the channel area downstream of the new trashrack structure and into the "V" of the screen itself. In 1980, attempts to capture predator fish using gill nets, SCUBA divers, angling, and backpack electroshocker were unsuccessful. In 1981, an electrofishing system was devised to remove predators. The system consisted of stationary gridwork of 48 electrodes hung vertically in the water (Figure 4).

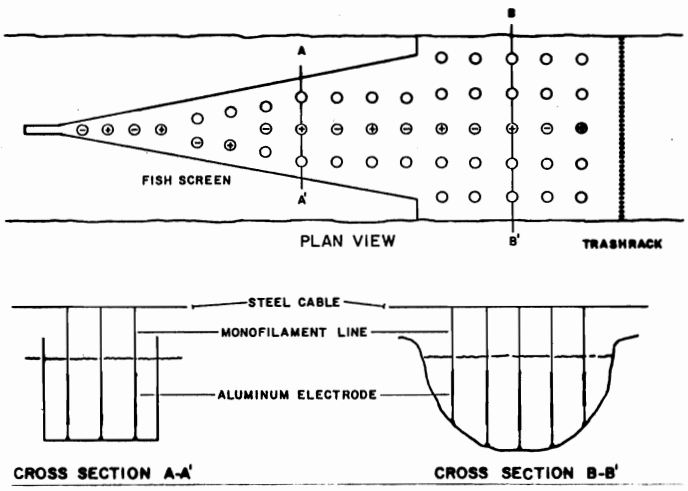

Rows across the canal were wired as cathode (+) and anode (-) arrays.

Figure 4. PLAN AND CROSS SECTION OF ELECTRODE PLACEMENT FOR ELECTROFISHING SYSTEM (Not to Scale)

Electrodes were made of 1.6-inch O.D. aluminum conduit, suspended by 200-pound test monofilament from 3/16-inch aircraft cable running across the channel. Electrodes were anchored to keep them vertical. Pairs of electrode rows were wired to produce an electrical field between them. Each pair of rows could be actuated independently of adjacent rows. Power was supplied by two 10-KW diesel generators. Calculated field strength varied from 6.0 amps at 200 volts AC at the trashrack to 1.6 amps at 133 volts AC at the lower end of the screen structure.

Before predator removal, two groups of marked salmon were released at night to evaluate predation loss in the "target" area. One color group was released from the trashrack, and the second was released into the bypass. After evaluating recoveries, the electrofishing test was conducted.

Beginning with the upstream electrode array, we alternately activated the next downstream array, in effect "walking" an electrical field down the channel and into the screen. Fish were either stunned or herded into the bypass, where they were recovered, identified, counted, and measured. Stomach samples were taken from predator species and preserved in formaldehyde for determination of feeding activity.

Predator removal began in the afternoon and continued at intervals into the evening. Just after sunset, a gill net was stretched across the upstream side of the trashrack structure to block escape of predators and to prevent immigration into the area. Electrofishing was conducted until predators were no longer captured. Marked salmon were again released at the trashrack and bypass locations to evaluate the effect of predator removal.

Chapter 3. RESULTS

Recoveries of marked chinook salmon were analyzed using chi-square analysis to determine if differences in recoveries from various release groups were statistically significant. Recoveries from upstream and downstream release groups were compared, as were recoveries from groups released upstream for different tests.

Trashrack Evaluations

For trashrack tests in 1980, recoveries of marked salmon released at the mouth of the screen were significantly higher ($P<0.005$) than recoveries of groups released upstream from the 6-inch trashrack (Table 1). Recoveries from the mass night release test were 88.8 percent for salmon introduced near the screen and 72.4 percent for the upstream release ($X^2 = 94.8$). When salmon were dribble released, recoveries from the day test were 91.0 percent for releases at the screen and 83.8 percent for upstream releases ($X^2 = 25.8$); for the night test, recoveries were 91.3 percent and 86.8 percent, respectively ($X^2 = 10.4$).

The lower recoveries of salmon from upstream releases would indicate that the trashrack contributed to some of the loss. This may well be the case, since test results when the trashrack was removed showed no significant difference ($P>0.05$) between screen and upstream recoveries. Salmon recoveries were 91.5 percent from the screen releases and 89.1 percent from the upstream group for the day test ($X^2 = 3.6$) and 91.7 percent and 89.3 percent, respectively, for the night test ($X^2 = 3.7$). Further substantiation is found in comparison of upstream group recoveries for the mass night releases with and without the trashrack. Recoveries were significantly lower ($X^2 = 100.0$, $P<0.005$) for salmon passing through the trashrack.

Analysis of upstream group recoveries for the night mass (88.8 percent) versus dribbled (91.3 percent) releases showed significantly higher recoveries when salmon passed through the trashrack in smaller groups (($X^2 = 66.5$, $P<0.005$). No significant difference at the 5 percent level was found for the upstream group between day and night tests of dribbled releases (($X^2 = 3.6$) or day and night tests when no trashrack was present ($X^2 = 0.01$).

For trashrack tests conducted in 1981, recoveries of marked salmon released near the fish screen were again significantly higher ($P<0.005$) than recoveries of fish released upstream from the 6-inch trashrack (Table 2). The day test recovered 83.3 percent of salmon from the screen and 73.4 percent of the upstream group ($X^2 = 32.2$). Recoveries from the night test were 87.0 percent from the screen and 79.5 percent from upstream ($X^2 = 23.2$).

When the 12-inch trashrack was tested, recoveries from screen-released groups were also significantly higher than recoveries of upstream-released groups. The day test recovered 80.1 percent of marked salmon released into the screen and 73.7 percent of those released upstream ($X^2 = 12.4$, $P<0.005$). Night test recoveries were 89.2 percent from the screen group and 79.2 percent from upstream ($X^2 = 17.1$, $P<0.005$). The results again indicate there are losses associated with salmon encountering a trashrack.

To determine if trashrack interbar spacing affected losses, upstream recoveries were compared between tests. Analysis showed that recoveries were not significantly different at the 5 percent level between the two trashrack sizes when releases were made either during the day (X^2 = 0.02) or at night (X^2 = 0.03). Comparison of 6-inch trashrack day and night test upstream recoveries showed significantly higher recoveries of night released salmon (X^2 = 11.8, $P<0.005$). A higher percentage of fish was also recovered from the night releases through the 12-inch trashrack than from day releases (X^2 = 8.3, $P<0.005$).

Bypass Evaluations

For bypass tests conducted in 1980, recoveries of salmon released directly into the old bypass were significantly higher ($P<0.005$) than for those released at the mouth of the screen (Table 3). Of the bypass group, 91.0 percent were recovered; for the screen releases, 85.7 percent were recovered (X^2 = 9.20). When the modified bypass was tested, recoveries were 93.3 percent from the bypass and 92.5 percent from the screen group, and there was no significant difference in recoveries.

In these tests, the modified bypass seemed to reduce losses within the confines of the fish screen that were associated with the old bypass. Although the "rollback" phenomenon was not entirely eliminated, the extent of water disruption was diminished, and the fewer salmon aggregated near the end of the screen. Comparison of recoveries from screen releases for the old and modified bypass tests showed significantly higher recoveries for the modified bypass (X^2 = 24.9, $P<0.005$).

During 1981 tests of the old bypass, recoveries of marked salmon were again significantly higher for bypass released groups than for those released at the screen mouth (Table 3). For the day test, recoveries were 94.7 percent for the bypass group and 89.9 percent for the screen releases (X^2 = 11.2, $P<0.005$). For the night test, recoveries were 94.6 percent for the bypass group and 88.9 percent for screen releases (X^2 = 14.2, $P<0.005$).

Evaluation of the modified bypass showed results similar to the 1980 tests. No significant difference was found between recoveries of bypass and screen groups for either the day test (X^2 = 1.3) or night test (X^2 = 0.08). Positioning the modified bypass cone lower in the water column further diminished the rollback of water. Comparison of screen recoveries showed no significant difference in recoveries between day and night tests for the old bypass (X^2 = 0.6) or the modified bypass (X^2 = 1.5). However, recovery of screen released salmon was significantly higher ($P<0.005$) for the modified bypass than the old bypass for day tests (X^2 = 11.2) and night tests (X^2 = 22.8).

Predator Control Evaluation

Recoveries of spray-dyed salmon released during the 1981 predator control evaluation (Table 4) were analyzed to determine the effectiveness of predator removal in reducing losses. Chi-square analysis revealed that recovery of bypass released fish (93.3 percent) was significantly higher than recovery of salmon released from the trashrack (90.7 percent) before predator removal was attempted (X^2 = 5.9, $P<0.05$).

No significant difference was found between recoveries of bypass (95.1 percent) and trashrack (94.8 percent) groups after predator removal (X^2 = 0.08). Recoveries of

trashrack released salmon were significantly greater after predator removal than before (X^2 = 14.7).

Using the electrofishing array, 25 Sacramento squawfish (Ptychocheilus grandis) and 17 steelhead rainbow trout (Salmo gairdnerii) were captured from the diversion channel (Table 5). Two squawfish and one steelhead were also removed from the upstream side of the block net. Squawfish ranged from 6.8 to 17.1 inches FL; steelhead ranged from 4.8 to 19.3 inches FL. Stomach contents of 20 squawfish were examined; fish parts were found in five samples, of which three contained recognizable salmonids. The steelhead stomach samples contained no fish.

TABLE 1. Release and Recovery Data for Marked Chinook Salmon, and Chi-Square Analysis for 1980 Hallwood-Cordua Trashrack Evaluations.

	Screen Group			Upstream Group			Chi-Square
	No. Released	No. Recovered	% Recovered	No. Released	No. Recovered	% Recovered	(Screen vs. Upstream Recoveries)
15.2 cm (6 in.) Trashrack							
Mass Night Test	1,100	977	88.8	1,118	810	72.4	94.8 ***
Dribble Day Test	1,113	1,013	91.0	1,049	879	83.8	25.8 ***
Dribble Night Test	945	863	91.3	1,020	885	86.8	10.4 ***
No Trashrack							
Mass Day Test	1,029	942	91.5	1,082	964	89.1	3.6 NS
Mass Night Test	1,095	1,004	91.7	1,088	971	89.3	3.7 NS

Chi-Square, Upstream Recoveries

15.2 cm Trashrack:	Mass Night vs. Dribble Night	66.5 ***
	Dribble Day vs. Dribble Night	3.6 NS
No Trashrack:	Day vs. Night	0.01 NS
With Trashrack Mass Night vs. No Trashrack Mass Night		100.0 ***

*** $p<0.005$
NS Not Significant, $p>0.05$

TABLE 2. Release and Recovery Data for Marked Chinook Salmon and Chi-Square Analysis for 1981 Hallwood-Cordua Trashrack Evaluations

	Screen Group			Upstream Group			Chi-Square
	No. Released	No. Recovered	% Recovered	No. Released	No. Recovered	% Recovered	(Screen vs. Upstream Recoveries)
15.2 cm (6 in.) Trashrack							
Day Test	1,104	920	83.3	1,109	814	73.4	32.2 ***
Night Test	1,104	960	87.0	1,180	938	79.5	23.2 ***
30.5 cm (12 in.) Trashrack							
Day Test	1,121	898	80.1	1,003	739	73.7	12.4 ***
Night Test	1,008	899	89.2	980	776	79.2	17.1 ***

Chi-Square, Upstream Recoveries	
15.2 cm Trashrack: Day vs. night	11.8 ***
30.5 cm Trashrack: Day vs. Night	8.3 ***
Day Tests: 15.2 cm vs. 30.5 cm Trashrack	0.02 NS
Night Tests: 15.2 cm vs. 30.5 cm Trashrack	0.03 NS

*** $p<0.005$
NS Not significant, $p>0.05$

TABLE 3. Release and Recovery Data for Marked Chinook Salmon and Chi-Square Analysis of 1980 and 1981 Hallwood-Cordua Bypass Elevations.

	Bypass Group			Screen Group			Chi-Square
	No. Released	No. Recovered	% Recovered	No. Released	No. Recovered	% Recovered	(Bypass vs. Screen Recoveries)
1980 Tests							
Old Bypass							
Night Test	545	496	91.0	1,064	912	85.7	9.2 ***
Modified Bypass							
Night Test	549	512	93.3	1,061	981	92.5	0.3 NS
Chi-Square, Screen Recoveries							
Old Bypass vs. Modified Bypass				24.9 ***			
1981 Tests							
Old Bypass							
Day Test	567	537	94.7	1,057	950	89.9	11.1 ***
Night Test	537	508	94.6	1,104	981	88.9	14.2 ***
Modified Bypass							
Day Test	511	487	95.3	1,044	980	93.9	1.3 NS
Night Test	531	497	93.6	1,021	943	92.4	0.08 NS
Chi-Square, Screen Recoveries							
Old Bypass, Day vs. Night				0.6 NS			
Modified Bypass, Day vs. Night				1.4 NS			
Day Test, Old vs. Modified Bypass				11.2 ***			
Night Test, Old vs. Modified Bypass				22.8 ***			

*** $p<0.005$
NS Not significant, $p>0.05$

TABLE 4. Release and Recovery Data for Marked Chinook Salmon and Chi-Square Analysis for Hallwood-Cordua Predator Control Evaluation.

	Bypass Group			Trashrack Group			Chi-Square
	No. Released	No. Recovered	% Recovered	No. Released	No. Recovered	% Recovered	(Bypass vs. Trashrack Group Recoveries)
Before Predator Removal	626	588	93.9	1,243	1,127	90.7	5.9 ***
After Predator Removal	631	600	95.1	1,147	1,087	94.8	0.08 NS

Chi-Square, Trashrack Group Recoveries

Before vs. After Predator Removal 14.7 ***

*** p 0.005
NS Not significant, p 0.05

TABLE 5. Numbers and Mean Sizes of Sacramento Squawfish and Steelhead Rainbow Trout Caught by Electrofishing During Hallwood-Cordua Predator Control Evaluation.

			SACRAMENTO SQUAWFISH		STEELHEAD	
	Shocking Duration Per Array	Total Shocking Time (min)	No. Captured	$\bar{X}$ FL (cm)	No. Captured	$\bar{X}$ FL (cm)
1 July 1981						
1430	20	3.4	10	35.9	6	30.7
1745	30	7.6	7	35.4	2	20.5
2115	30	8.2	3	37.3	3	44.9
2200	30	9.6	3	29.9	4	40.2
2230	30	8.0	2	33.8	2	32.5
TOTAL ($\bar{x}$ FL)		36.8	25	(35.0)	17	(34.4)

Chapter 4. DISCUSSION

This investigations of trashracks with 6- and 12-inch bar spacings revealed that losses of salmon passing through the trashracks were significantly higher than concurrent losses of salmon released downstream of the trashracks. Losses for groups of fish released upstream of the trashrack ranged between 13.2 and 27.6 percent, while downstream losses were between 8.7 and 19.9 percent. Similar evaluations with the trashracks removed resulted in lower losses in groups released upstream (10.7 to 10.9 percent), but losses were not statistically different from losses in the downstream groups (8.3 to 8.5 percent).

Evidently the presence of the trashrack increased the likelihood of predation. The trashracks probably increased the structural complexity of the environment (Cooper and Crowder, 1979), providing an area where maximum foraging efficiencies and the highest densities of predators could occur.

Squawfish were seen immediately downstream of the trashracks and near eddies created by the trashrack and supporting structures. In the tests, mass releases of salmon approaching the trashrack incurred greater losses than dribbled releases. Under ordinary circumstances, schooling behavior of a prey fish would tend to reduce predator effectiveness (Breder, 1967). Predator advantages afforded by the trashracks apparently offset the protection of the school, particularly since the school was an artificial aggregation of fish.

Tests releasing salmon at night showed reduced losses over day releases, probably reflecting the tendency of the school to disperse under darkness (Breder, 1967), as well as a lower feeding efficiency by sight-oriented squawfish (Eggers, 1978).

Losses that resulted from salmon passing through either the 6-inch or 12-inch trashrack were not significantly different, ranging between 27 percent for day tests and 21 percent for night tests. Again, losses may be attributed to the presence of the trashracks and the opportunities that they provide to predators.

These evaluations of the Hallwood-Cordua bypass system focused on reducing the disorientation of salmon by the "rollback" of water and the forced accumulation of fish near the end of the screen. Tests of the old bypass system revealed that losses of fish released at the screen mouth were greater than losses of salmon released directly into the bypass. Screen losses ranged from 10.1 to 14.3 percent; bypass-released losses were between 5.3 to 9.0 percent.

Delay and disorientation probably caused the increased susceptibility to predation. The changes made in the bypass design reduced losses of the screen-released group by between 6.1 and 7.6 percent. While bypass modifications did not entirely eliminate flow disruption, salmon did not accumulate in the end of the screen in large numbers. The modified bypass apparently speeded transit of salmon through the screen, reducing opportunities for predators.

Removal of Sacramento squawfish and steelhead from the vicinity of the fish screen reduced predation loss of chinook salmon by about 4 percent. The effect of predator removal was only temporary, however, as the area was immediately repopulated by predators from the upstream portion of the canal once the block net was removed. Since removal efforts did not cover a large portion of the canal, it was inevitable

that predators could return, being attracted by the concentration of prey in the screen area. Many of the potential predators undoubtedly resided in the section of canal between the diversion dam and the screen, making periodic excursions into the screen area to feed. Squawfish on the downstream side of the screen were also attracted by the salmon, but had no way of getting to the prey.

This study provided further information on the nature of predation losses at various locations within fish protective facilities and strategies for reducing such losses. Structural modification of the Hallwood-Cordua bypass resulted in decreased loss of salmon. However, the construction of a trashrack created a new area where predation could occur.

Trashracks may have inherent predation problems due to the nature of their function and structure and to the behavioral responses of predator and prey species. Reactions of those species likely to be found at a particular trashrack site need to be considered in designing the trashrack to minimize losses. Predator removal can be used to reduce predation losses, providing control techniques employed are frequent and extensive enough to affect a large portion of the predator population. Removal of predators cannot replace properly designed screens that minimize accumulation of predators and prey.

REFERENCES

Brown, Larry R. and Peter B. Moyle. 1981. The impact of squawfish on salmonid populations: A review. North American Journal of Fisheries Management. 1:104-111.

Breder, C.M., Jr. 1967. On the survival value of fish schools. Zoologica 52(4):25-40)

Cooper, W.E. and L.B. Crowder. 1979. Patterns of predation in simple and complex environments. In: H. Clepper (ed.) Predator-prey systems in fisheries management. Sport Fishing Institute. Washington, D.C.

Eggers, D.M. 1978. Limnetic feeding behavior of juvenile sockeye salmon in Lake Washington and predator avoidance. Limnol. Oceanogr. 23(6):1114-1125.

Hall, F.A. 1979. An evaluation of downstream migrant chinook salmon (Oncorhynchus tshawytscha) losses at Hallwood-Cordua Fish Screen Anad. Fish. Br. Admin. Rpt. #79-5.

MacPhee, C. and G.E. Reid. 1971. St. Joe River cutthroat trout and northern squawfish studies. Idaho Fish and Game Department.

Phinney, D., D.M. Miller and M.L. Dahlberg. 1967. Mass marking young salmonids with fluorescent pigment. Trans. Amer. Fish. Soc. 962):157-162.

Zimmer, P.D. 1953. Observations on hatchery releases and squawfish predation in the Little White Salmon River in spring of 1953. U.S.F.W.S. Regional Office, Portland, Oregon.