FF/BIO-4ATR/82-5

PASSAGE OF JUVENILE CHINOOK SALMON, *ONCORHYNCHUS TSHAWYTSCHA*, AND AMERICAN SHAD, *ALOSA SAPIDISSIMA*, THROUGH VARIOUS TRASHRACK BAR SPACINGS

HARVEY H. READING
DEPARTMENT of FISH AND GAME

Technical Report 5

October 1982

INTERAGENCY ECOLOGICAL STUDY PROGRAM FOR THE SACRAMENTO-SAN JOAQUIN ESTUARY

A Cooperative Study by the:

CALIFORNIA DEPARTMENT OF WATER RESOURCES
CALIFORNIA DEPARTMENT OF FISH AND GAME
U.S. BUREAU OF RECLAMATION
U.S. FISH AND WILDLIFE SERVICE

PASSAGE OF JUVENILE CHINOOK SALMON, *ONCORHYNCHUS TSHAWYTSCHA*, AND AMERICAN SHAD, *ALOSA SAPIDISSIMA*, THROUGH VARIOUS TRASHRACK BAR SPACINGS[1/]

by

Harvey H. Reading[2/]
Bay-Delta Fishery Project
4001 North Wilson Way
Stockton, CA 95205

ABSTRACT

Passage of juvenile chinook salmon and American shad through trashrack bar spacings from 7.6 to 30.5 cm (3 to 12 in.) was investigated. Evaluations were conducted during daylight and night conditions with channel velocities of 30.5, 61.0, and 91.4 cm/s (1, 2, and 3 ft/s). Salmon passage appeared to be independent of trashrack bar spacings. Passage increased as channel velocity increased.

American shad passage also increased as channel velocity increased. Passage through trashrack bar spacings less than 22.8 cm (9.0 in.) was significantly reduced at an approach velocity of 30.5 cm/s (1 ft/s).

1/ Interagency Ecological Study Program for the Sacramento-San Joaquin Estuary, Technical Report No. 5. October, 1982.

2/ Present address: Department of Fish and Game, 2440 Main Street, Red Bluff, CA 96080.

INTRODUCTION

The design for the proposed Peripheral Canal intake and fish facilities included a trashrack at the head of an off-river intake channel. In the past, the criterion for selection of trashrack bar spacing has been to prevent debris from entering the facilities with little regard given to how fish react to the trashrack structure. Evaluations at the Hallwood-Cordua fish screen on the Yuba River indicated that significantly higher predation losses occurred for juvenile chinook salmon when a trashrack was present than when on was not (Dept. Fish and Game, unpublished). Such losses could adversely affect juvenile chinook salmon and American shad migrating past any large-scale water diversion which include trashrack structures unless the trashracks are designed to minimize delay in passage, while still protecting downstream structures.

The goal of this study was to determine acceptable combinations of bar spacings and channel velocities for the efficient passage of downstream migrating chinook salmon and American shad.

METHODS

Evaluations took place during 1980 and 1981 at the Fish Screen Test Facility at Hood, California. Unfiltered Sacramento River water was used exclusively for pre-test holding and for testing.

Testing was conducted in a 1.22 m (4 ft) wide wood-sided flume with a concrete floor (Figure 1). An adjustable rectangular weir at the flume's outlet allowed for regulation and measurement of channel velocities. Velocities tested were 30.5, 61.0, and 91.4 cm/s (1.0, 2.0, and 3.0 ft/s). A sloping aluminum screen with 3.96 mm (5/32 in.) diameter perforations on 5.56 mm (7/32 in.) centers located between the trashrack and the weir prevented the escape of fish from the test area. Another screen of the same material, lowered onto the upstream face of the trashrack at the conclusion of a test, separated fish that passed through the trashrack from those not passed.

The trashrack, constructed from redwood slats 0.95 cm (0.38 in.) wide and 9.5 cm (3.75 in.) deep, mounted in a steel frame, was positioned at an angle of 45 deg in the downstream direction. Bar spacings, adjusted by varying the number of bar slats present in the frame, included 7.6, 15.2, 22.8, and 30.5 cm (3.0, 6.0, 9.0, and 12.0 in.). During control tests, the trashrack was removed from the flume.

In addition to bar spacings and channel velocity, the effects of daylight and darkness on passage were evaluated.

A transparent plastic box, 61 cm (24 in.) long, 40.6 cm (16 in.) wide, and 19.1 cm (7.5 in.) deep, located 3.1 m (10.0 ft) upstream from the center of the trashrack, allowed fish to be released underwater at a depth of 45.7

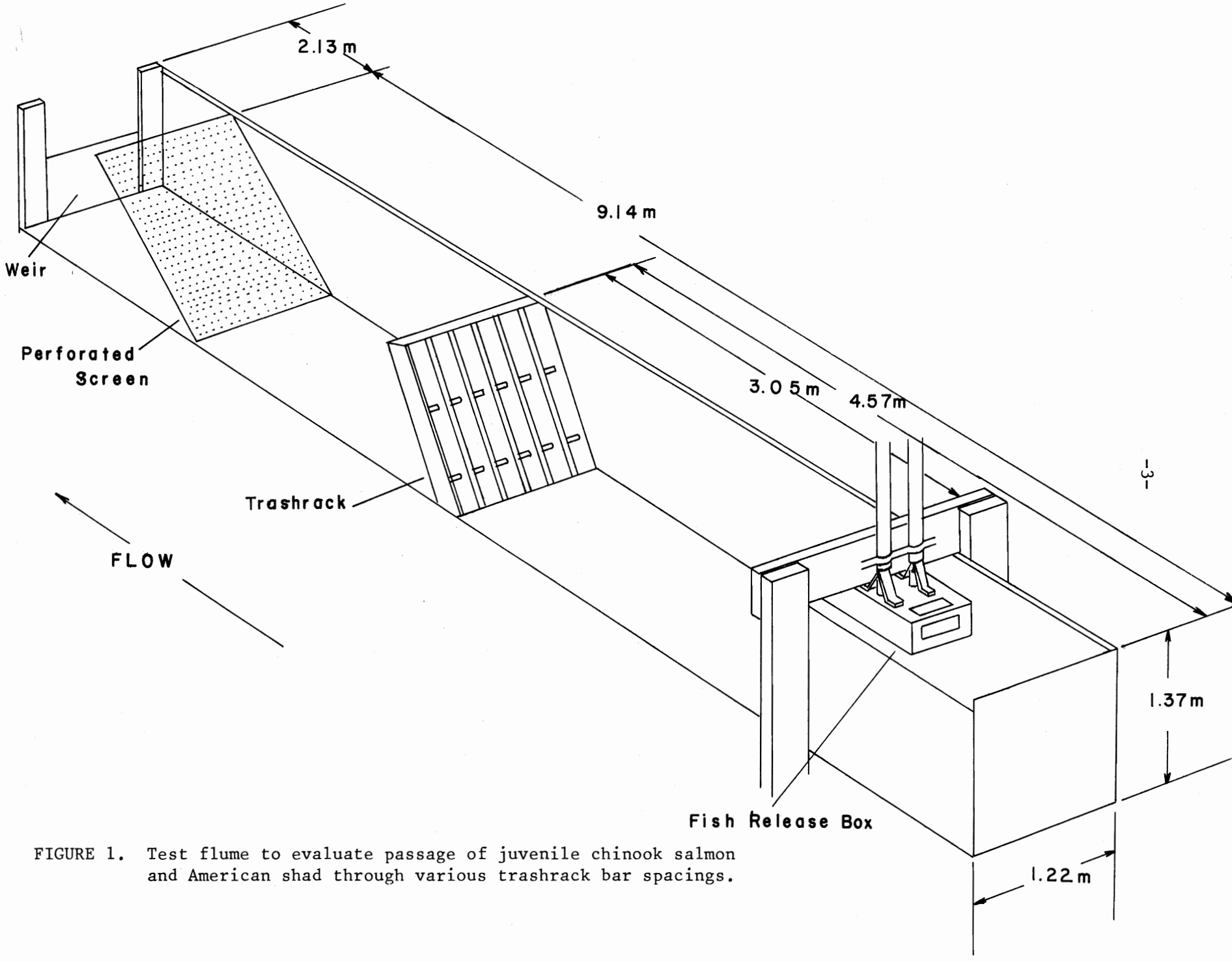

FIGURE 1. Test flume to evaluate passage of juvenile chinook salmon and American shad through various trashrack bar spacings.

cm (18 in.). Screened openings at the ends of the release box permitted water to flow through it, which allowed the test fish to acclimate to the flow before being released.

Juvenile American shad, collected with beach seines from the Sacramento River and the Delta, ranged in average size from 35 to 78 mm (1.4 to 3.1 in.) fork length (FL). Shad tests were conducted from July through October, 1980.

Juvenile chinook salmon, collected primarily with beach seines from the Sacramento and American rivers, ranged in average size from 35 to 75 mm (1.4 to 3.0 in.) FL during the course of testing. Near the study's end, as seining success declined, fish were collected from the Hallwood-Cordua fish screen on the Yuba River, approximately 24 km (15 miles) east of Marysville, California. Salmon tests were conducted from February through June, 1981.

Fish were held at the test facility for at least 24 h in stainless steel or epoxy-lined steel tanks before testing. Sacramento River water flowed constantly through these tanks at approximately 11.4 l/min (3 gal/min). Fish were fed Oregon moist pellets twice per day, in the morning and at night, during pre-test holding, but not fed for at least 2 h prior to testing.

Groups of 25 fish were tested and the test duration was 5 min. A 5 min flow acclimation period, with fish in the release box at a depth of 45.7 cm (18 in.), preceded the release of fish for testing. At the conclusion of a test, the separating screen was installed, fish were collected from the flume, measured to the nearest 0.5 mm (0.02 in.) FL, and released into the Sacramento River.

Because results of the early shad tests with the channel velocity at 30.5 cm/s (1.0 ft/s) indicated shad preferred to remain at an upstream location in the test flume, a series of tests were conducted using a release point 1.8 m (6.0 ft) downstream from the trashrack. Groups of 50 fish were used for these tests.

Analysis of variance techniques were used to statistically compare the results, expressed in percent passage, at the various parameter combinations. Results presented in this report are averages, obtained after arcsin transformation, reconverted to percent values. Significant in this report means the null hypothesis is rejected at the 5% level of significance.

RESULTS

Salmon passage appeared to be independent of trashrack bar spacing at all channel velocities evaluated. Passage increased significantly with increasing channel velocity and became nearly complete at 61.0 cm/s (2.0 ft/s) (Table 1). At 30.5 cm/s (1.0 ft/s), passage at night was significantly higher than during daylight tests. Although no significant differences were found in passage at the various bar spacings at 30.5 cm/s (1.0 ft/s),

TABLE 1. Average percent passage of juvenile chinook salmon at various trash-rack bar spacings, channel velocities and light condition. Number of replicate tests: ( ).

Channel Velocity (cm/s)	Light Condition	Trashrack Bar Spacing (cm) 7.6	15.2	22.8	30.5	Control 121.9
		Average % Passage				
30.5	Day	39.7 (10)	49.8 (10)	51.1 (11)	34.9 (11)	44.8 (10)
30.5	Night	76.7 (10)	87.3 (10)	91.1 (10)	87.2 (10)	87.7 (10)
61.0	Day	97.9 (10)	96.3 (10)	92.0 (10)	96.4 (10)	97.8 (10)
61.0	Night	87.8 (10)	96.9 (10)	95.4 (10)	94.1 (10)	93.2 (10)
91.4	Day	98.3 (10)	99.8 (11)	98.5 (10)	99.3 (9)	99.6 (10)
91.4	Night	98.2 (10)	98.6 (10)	98.4 (10)	92.4 (10)	97.2 (10)

the highest percent passage was at a bar spacing of 22.8 cm (9.0 in.) during both day and night tests.

Shad passage also increased significantly with increasing channel velocity, with almost complete passage occurring during the day at 91.4 cm/s (3.0 ft/s) and at 61.0 cm/s (2.0 ft/s) at night (Table 2). A significant increase in passage at night compared with passage during daylight occurred at both 30.5 and 61.0 cm/s (1.0 and 2.0 ft/s).

Shad passage during the day from the upstream releases at 30.5 cm/s (1.0 ft/s) did not vary greatly in response to different bar spacings. On the average, between 90 and 100% of the shad released upstream remained upstream at all bar spacings and the control tests.

There was no significant difference in upstream passage from downstream releases among the 22.8 cm (9.0 in.), 30.5 cm (12.0 in.), and control bar spacings, but passage at these spacings was significantly higher than that at the 7.6 and 15.2 cm (3.0 and 6.0 in.) spacings. Passage at 7.6 and 15.2 cm (3.0 and 6.0 in.) bar spacings did not differ significantly.

Viewing the passage data obtained during the day at 30.5 cm/s (1.0 ft/s) from the standpoint of average percent upstream of the trashrack at the conclusion of a test regardless of where they were released, produced the following:

1. Comparison of results from upstream releases with downstream releases showed no significant difference in percent upstream during control tests, and

2. As bar spacing increased the upstream passage of fish from downstream releases increased until, at 30.5 cm (12.0 in.), no significant difference in percent upstream existed between upstream and downstream releases (Figure 2).

DISCUSSION

The results obtained with chinook salmon indicate that channel velocity is the most important factor in passing young salmon through trashracks. This is surprising in light of the results obtained by Hanson and Li (in press), which indicate that bar spacings less than 15 cm (5.9 in.) may act as a barrier to salmon passage at 30.5 cm/s (1.0 ft/s). The higher passage at night in our tests at 30.5 cm/s (1.0 ft/s) also seems to conflict with Hanson and Li's results which indicated similar passage times under lighted and darkened conditions. Similar to Hanson and Li's results, we also had the greatest passage of salmon at 30.5 cm/s (1.0 ft/s) at a bar spacing of 22.8 cm (9.0 in.).

Based on their results with salmon and our study's results with American shad, one would expect to see a significant interaction between bar spacing and salmon passage. Had time permitted conducting a series of downstream releases with salmon, perhaps such an interaction would have emerged.

TABLE 2. Average percent passage of juvenile American shad at various trash-rack bar spacings, channel velocities and light conditions. Number of replicate tests: ( ).

Channel Velocity (cm/s)	Light Condition	Trashrack Bar Spacing (cm) 7.6	15.2	22.8	30.5	Control 121.9
		Average % Passage				
Fish Released Upstream from trashrack.						
30.5	Day	9.1 (19)	0.8 (10)	3.7 (9)	2.5 (9)	9.4 (21)
30.5	Night	84.9 (11)	74.0 (9)	63.0 (10)	55.8 (9)	84.5 (12)
61.0	Day	67.2 (20)	58.2 (9)	70.5 (10)	56.3 (11)	77.2 (24)
61.0	Night	100 (10)	99.8 (9)	99.8 (9)	99.3 (9)	99.5 (11)
91.4	Day	97.2 (13)	99.9 (9)	99.9 (12)	100 (3)	99.6 (19)
91.4	Night	99.7 (9)	99.8 (5)	100 (9)	100 (3)	99.2 (12)
Fish Released Downstream from Trashrack		Average % Passage Upstream				
30.5	Day	3.1 (2)	30.4 (3)	78.9 (2)	89.9 (2)	88.1 (2)

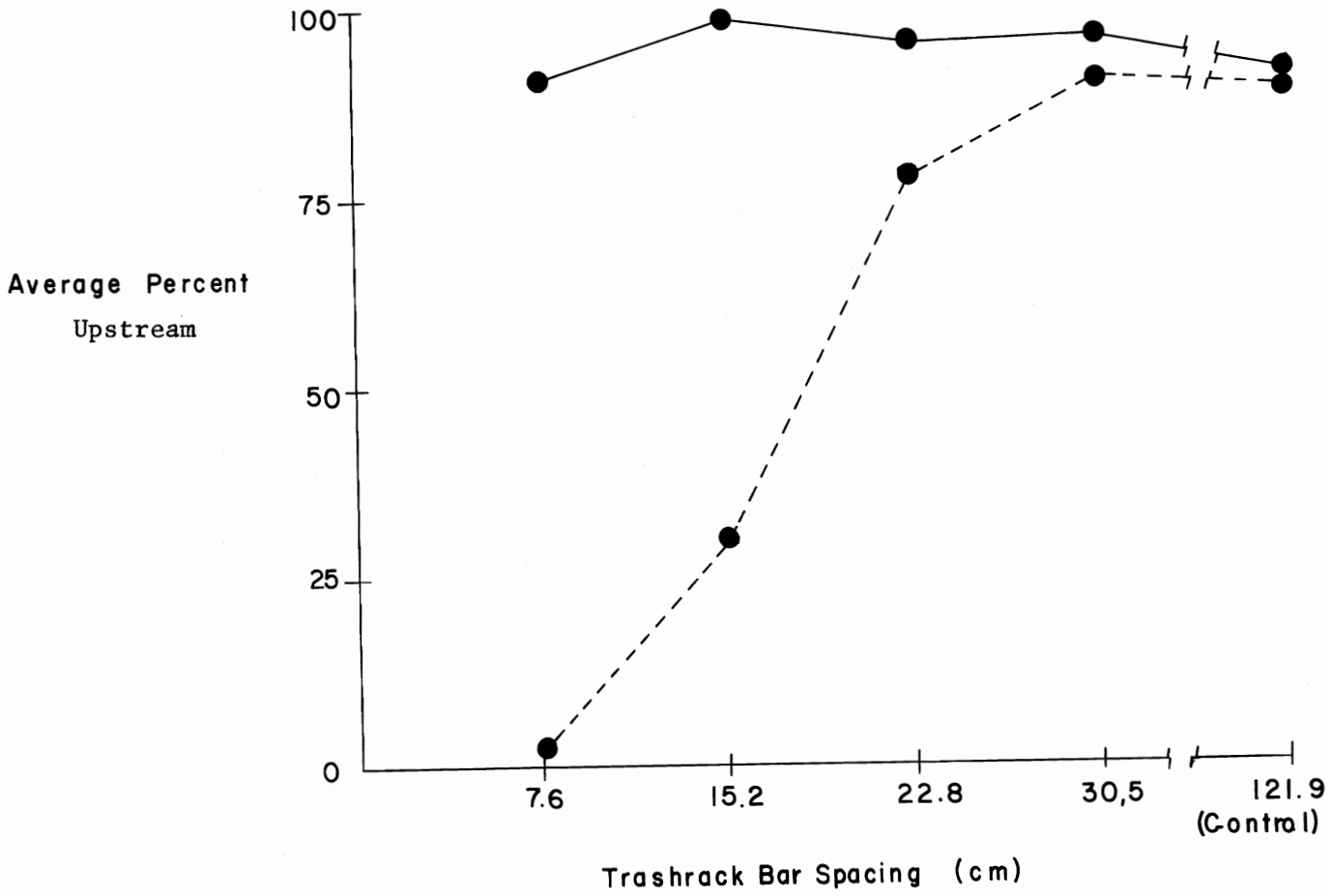

FIGURE 2. Average percent of juvenile American shad found upstream from the trashrack at various bar spacings in daylight at a channel velocity of 30.5 cm/s. Upstream releases (——), downstream releases(----).

The American shad results indicate that a bar spacing of at least 22.8 cm (9.0 in.) is needed to prevent the delay of downstream migrants of this species. Bar spacings less than 22.8 cm (9.0 in.) significantly reduce the passage of young American shad, which could cause populations of young shad to suffer significant losses to predation.

The relationship of shad passage at night to size appears to bear out the logical assumption that larger fish are stronger swimmers, but the failure to maintain the same average fish size for all tests may have masked a possible interaction at night between shad passage and trashrack bar spacing.

ACKNOWLEDGMENTS

Thanks are due to Ronald Lunsford and James Gibboney, Department of Water Resources, for engineering and maintaining the test flume and associated apparatus; to Alan Pickard, Dan Odenweller, and Robert Kano, Department of Fish and Game, for providing assistance during testing and editorial advice; and finally to the seasonal employees of the Departments of Fish and Game and Water Resources who provided most of the effort required to complete the study.

LITERATURE CITED

Hanson, C. H. and H. W. Li. Behavioral response of juvenile chinook salmon, Oncorhynchus tshawytscha, to trashracks bar spacing. (In press, Calif. Fish and Game.)