OC PUBLIC WORKS

SANTA ANA, CALIFORNIA

BRYAN SPEEGLE, DIRECTOR

PLANS FOR CONSTRUCTION OF

HASTER RETARDING BASIN AND HASTER BASIN PUMP STATION PROJECT

OCFCD FACILITY No. C05B02

MAY 2010

FUNDED BY: ORANGE COUNTY FLOOD CONTROL DIVISION
MAINTAINED BY: ORANGE COUNTY FLOOD CONTROL DIVISION

70% PLAN SUBMITTAL

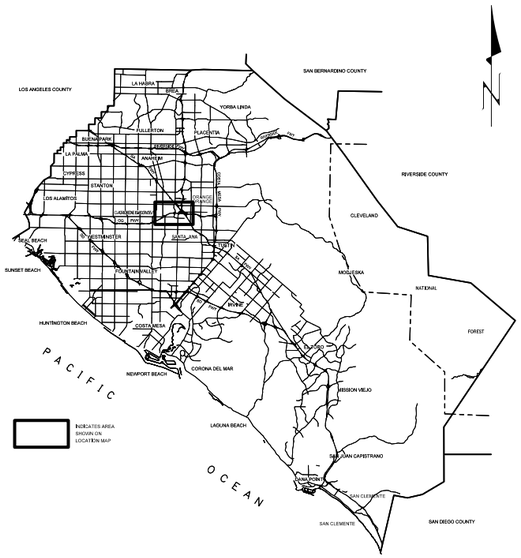

VICINITY MAP

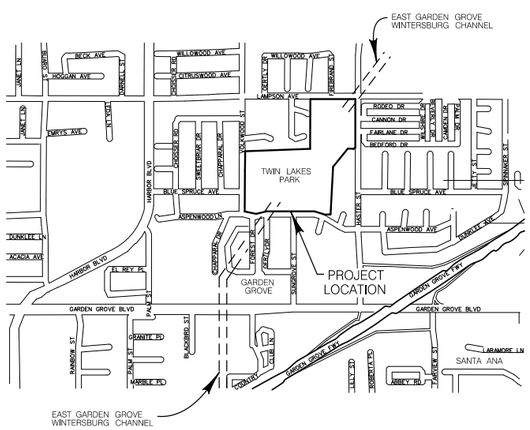

LOCATION MAP

UTILITY OWNER	PHONE NO.	CONTACT
SOUTHERN CALIFORNIA EDISON	(714) 796–9932	KIM GURULE
AT&T CALIFORNIA	(714) 666–5503	KERRI KINNEY
GARDEN GROVE SANITARY DISTRICT	(714) 741–5349	DAVID ENTSMINGER
GARDEN GROVE WATER DIVISION	(714) 741–5349	DAVID ENTSMINGER
GARDEN GROVE TRAFFIC DIVISION	(714) 741–5190	GEORGE ALLEN
THE GAS COMPANY	(714) 634–5016	FRANK WINN
TIME WARNER CABLE	(714)903–8446	DAVE DOLNEY

BENCH MARK:

–

BASIS OF BEARINGS:

THE BEARINGS SHOWN HEREON ARE BASED ON THE BEARING BETWEEN O.C.S. HORIZONTAL CONTROL STATION GPS NO. 3073 AND STATION GPS NO. 3074, BEING S00°39'55"W, PER RECORDS ON FILE IN THE OFFICE OF THE ORANGE COUNTY SURVEYOR.

CITY OF GARDEN GROVE

APPROVED: _____
KEITH JONES, DIRECTOR OF PUBLIC WORKS DATE

RESOURCES AND DEVELOPMENT MANAGEMENT DEPARTMENT

SUBMITTED: _____
PHILLIP JONES, P.E., MANAGER
FLOOD CONTROL DESIGN DATE

RECOMMENDED: _____
NADEEM H. MAJAJ, P.E. DATE
ASSISTANT DIRECTOR OF PUBLIC WORKS
FLOOD CONTROL DIVISION

APPROVED: _____
IGNACIO OCHOA DATE
DIRECTOR OF PUBLIC WORKS

PREPARED BY

AKM

PREPARED UNDER RESPONSIBLE CHARGE OF:

REGISTERED PROFESSIONAL ENGINEER JOHN A. LOAGUE No. 50292 Exp. 6/30/09 CIVIL STATE OF CALIFORNIA

JOHN A. LOAGUE, P.E., PRINCIPAL ENGINEER DATE

NO.	DESCRIPTION	SHT.	APPROVED	DATE

REVISIONS

W. O. NO. _____–_____
DWG. NO. _____–_____

SHEET 1 OF 104

NATIONAL POLLUTANT DISCHARGE ELIMINATION SYSTEM (NPDES) NOTES

1. IN CASE OF EMERGENCY, CALL AT WORK PHONE * OR HOME PHONE *
2. SEDIMENT FROM AREAS DISTURBED BY CONSTRUCTION SHALL BE RETAINED FROM THE SITE USING STRUCTURAL CONTROLS TO THE MAXIMUM EXTENT PRACTICAL.
3. APPROPRIATE BMP'S FOR CONSTRUCTION-RELATED MATERIALS, WASTE, SPILLS SHALL BE IMPLEMENTED TO MINIMIZE TRANSPORT FROM THE SITE TO THE STREETS, DRAINAGE FACILITIES, OR ADJOINING PROPERTIES VIA RUNOFF, VEHICLE TRACKING, OR WIND.
4. STOCKPILES OF SOIL SHALL BE PROPERLY CONTAINED TO MINIMIZE SEDIMENT TRANSPORT FROM THE SITE TO STREETS, DRAINAGE FACILITIES OR ADJACENT PROPERTIES VIA RUNOFF, VEHICLE TRACKING, OR WIND.
5. RUNOFF FROM EQUIPMENT AND VEHICLE WASHING SHALL BE CONTAINED AT CONSTRUCTION SITES UNLESS TREATED TO REDUCE OR REMOVE SEDIMENT OR OTHER POLLUTANTS.
6. ALL CONSTRUCTION CONTRACTOR AND SUBCONTRACTOR PERSONNEL ARE TO BE MADE AWARE OF THE REQUIRED BEST MANAGEMENT PRACTICES AND GOOD HOUSEKEEPING MEASURES FOR THE PROJECT SITE AND ANY ASSOCIATED CONSTRUCTION STAGING AREAS.
7. AT THE END OF EACH DAY OF CONSTRUCTION ACTIVITY ALL CONSTRUCTION DEBRIS AND WASTE MATERIALS SHALL BE COLLECTED AND PROPERLY DISPOSED IN TRASH OR RECYCLE BINS.
8. CONSTRUCTION SITES SHALL BE MAINTAINED IN SUCH A CONDITION THAT AN ANTICIPATED STORM DOES NOT CARRY WASTES OR POLLUTANTS OFF THE SITE. DISCHARGES OF MATERIAL OTHER THAN STORMWATER ONLY WHEN NECESSARY FOR PERFORMANCE AND COMPLETION OF CONSTRUCTION PRACTICES AND WHERE THEY DO NOT; CAUSE OR CONTRIBUTE TO A VIOLATION OF ANY WATER QUALITY STANDARD; CAUSE OR THREATEN TO CAUSE POLLUTANT, CONTAINMENT, OR NUISANCE; OR CONTAIN A HAZARDOUS SUBSTANCE IN QUANTITY REPORTABLE UNDER FEDERAL REGULATIONS 40 CFR PARTS 117 AND 302.
9. POTENTIAL POLLUTANTS INCLUDE BUT ARE NOT LIMITED TO: SOLID OR LIQUID CHEMICAL SPILLS; WASTE FROM PAINTS, STAINS, SEALANTS, GLUES, LIMES, PESTICIDES, HERBICIDES, WOOD PRESERVATIVES AND SOLVENTS; ASBESTOS FIBERS, PAINT FLAKES OR STUCCO FRAGMENTS; FUELS, OILS, LUBRICANTS, AND HYDRAULIC, RADIATOR OR BATTERY FLUIDS; FERTILIZERS, VEHICLE/EQUIPMENT WASH WATER AND CONCRETE WASH WATER; CONCRETE, DETERGENT OR FLOATABLE WASTES; WASTES FROM ANY ENGINE/EQUIPMENT STEAM CLEANING OR CHEMICAL DEGREASING AND SUPERCHLORINATED POTABLE WATER LINE FLUSHING. DURING CONSTRUCTION, PERMITTEE SHALL DISPOSE OF SUCH MATERIALS IN A SPECIFIED AND CONTROLLED TEMPORARY AREA OFF-SITE, PHYSICALLY SEPARATED FROM POTENTIAL STORMWATER RUNOFF, WITH ULTIMATE DISPOSAL IN ACCORDANCE WITH LOCAL, STATE AND FEDERAL REQUIREMENTS.
10. DEWATERING OF CONTAMINATED GROUND WATER, OR DISCHARGING CONTAMINATED SOILS VIA SURFACE EROSION IS PROHIBITED. DEWATERING OF NON-CONTAMINATED GROUNDWATER REQUIRES A NATIONAL POLLUTANT DISCHARGE ELIMINATION SYSTEM PERMIT FROM RESPECTIVE STATE REGIONAL WATER QUALITY CONTROL BOARD.
11. GRADED AREAS ON THE PERMITTED AREA PERIMETER MUST DRAIN AWAY FROM THE FACE OF SLOPES AT THE CONCLUSION OF EACH WORKING DAY. DRAINAGE IS TO BE DIRECTED TOWARD DESILTING FACILITIES.
12. THE PERMITTEE AND CONTRACTOR SHALL BE RESPONSIBLE AND SHALL TAKE NECESSARY PRECAUTIONS TO PREVENT PUBLIC TRESPASS ONTO AREAS WHERE IMPOUNDED WATER CREATES A HAZARDOUS CONDITION.
13. THE PERMITTEE AND CONTRACTOR SHALL INSPECT THE EROSION CONTROL WORK AND INSURE THAT THE WORK IS IN ACCORDANCE WITH THE APPROVED PLANS.
14. THE PERMITTEE SHALL NOTIFY ALL GENERAL CONTRACTORS, SUBCONTRACTORS, MATERIAL SUPPLIERS, LESSEES, AND PROPERTY OWNERS THAT DUMPING OF CHEMICALS INTO THE STORM DRAIN SYSTEM TO THE WATERSHED IS PROHIBITED.
15. EQUIPMENT AND WORKERS FOR EMERGENCY WORK SHALL BE MADE AVAILABLE AT ALL TIMES DURING THE RAINY SEASON. NECESSARY MATERIALS SHALL BE MADE AVAILABLE ON SITE AND STOCKPILED AT CONVENIENT LOCATIONS TO FACILITATE RAPID CONSTRUCTION OF TEMPORARY DEVICES WHEN RAIN IS IMMINENT.
16. ALL REMOVABLE EROSION PROTECTIVE DEVICES SHALL BE IN PLACE AT THE END OF EACH WORKING DAY WHEN THE 5-DAY RAIN PROBABILITY FORECAST EXCEEDS 40%.
17. SEDIMENTS FROM AREAS DISTURBED BY CONSTRUCTION SHALL BE RETAINED ON SITE USING EFFECTIVE COMBINATION OF EROSION AND SEDIMENT CONTROLS TO THE MAXIMUM EXTENT PRACTICABLE, AND STOCKPILES OF SOIL SHALL BE PROPERLY CONTAINED MINIMIZE SEDIMENT TRANSPORT FROM THE SITE TO STREETS, DRAINAGE FACILITIES OF ADJACENT PROPERTIES VIA RUNOFF, VEHICLE TRACKING, OR WING.
18. APPROPRIATE EMPS FOR CONSTRUCTION-RELATED MATERIALS, WASTE, SPILLS OR RESIDUES SHALL BE IMPLEMENTED AND RETAINED ONSITE TO MINIMIZE TRANSPORT FROM THE SITE TO STREETS, DRAINAGE FACILITIES, OR ADJOINING PROPERTY BY WIND OR RUNOFF.

CONSULTANTS

DESIGN ENGINEER

AKM CONSULTING ENGINEERS
553 WALD
IRVINE, CA 92618
(949) 753-7333

GEOTECHNICAL ENGINEER

NINYO & MOORE
GEOTECHNICAL AND ENVIRONMENTAL
SCIENCES CONSULTANTS
475 GODDARD, SUITE 200
IRVINE, CA 92618
(949) 753-7070

ARCHITECT

KNITTER & ASSOCIATES
20151 SW BIRCH, SUITE 100
NEWPORT BEACH, CA 92660-1794
(949) 752-1177

PROJECT DATA

PROJECT ADDRESS

12952 LAMPSON AVE
GARDEN GROVE, CA 92840

OWNER

ORANGE COUNTY FLOOD CONTROL DIVISION
COUNTY OF ORANGE
300 N. FLOWER STREET
SANTA ANA, CALIFORNIA 92701

BUILDING CODE

CALIFORNIA ELECTRIC CODE
CALIFORNIA PLUMBING CODE
CALIFORNIA BUILDING CODE
CALIFORNIA MECHANICAL CODE

TYPE OF CONSTRUCTION

TYPE: TYPE V
OCCUPANCY: U (PUBLIC UTILITY)

BUILDING USE

BUILDING WILL NOT BE USED FOR ANY PUBLIC USE.

GEOTECHNICAL REPORT

REPORT TITLE:
"GEOTECHNICAL EVALUATION
PROPOSED PUMP STATION AND BASIN GRADING
HASTER BASIN/TWIN LAKES PARK
GARDEN GROVE, CALIFORNIA"
DATED AUGUST 19, 2005
PREPARED BY NINYO & MOORE

CONSTRUCTION ACCESS

PRIMARY CONSTRUCTION ACCESS WILL BE
FROM A NEWLY CONSTRUCTED ACCESS ROAD
ON HASTER STREET SOUTH OF LAMPSON AVE.
LOCATED IN THE NORTHEAST CORNER OF THE BASIN.

COUNTY OF ORANGE CALIFORNIA

MARK	DESCRIPTION	DATE	APPR.

PREPARED UNDER THE RESPONSIBLE CHARGE OF:

REGISTERED PROFESSIONAL ENGINEER JOHN A. LOAGUE No. 50292 Exp. 6/30/09 CIVIL STATE OF CALIFORNIA

DATE

DESIGNED BY: GLEN DEITER
DRAWN BY: CADD
CHECKED BY: JOHN LOAGUE
DRAWING CODE: F06-101-7
FILE NAME: -
PLOT DATE: $DATE$
SCALE: AS SHOWN

OC PUBLIC WORKS

PREPARED BY: AKM CONSULTING ENGINEERS

HASTER RETARDING BASIN (C05B02) PUMP STATION

CONSULTANTS AND PROJECT DATA

Sheet Reference Number

G-1

70% PLAN SET
INDEX OF DRAWINGS

GENERAL

1. T1 TITLE SHEET, VICINITY MAP, LOCATION MAP
2. G1 CONSULTANTS AND PROJECT DATA
3. G2 INDEX OF DRAWINGS
4. G3 LEGENDS, SYMBOLS AND ABBREVIATIONS
5. G4 SURVEY MAP I
6. G5 SURVEY MAP II

DEMOLITION

7. D1 DEMOLITION SITE PLAN
8. D2 DEMOLITION PLAN SOUTH WEST CORNER OF HASTER BASIN
9. D3 LAKE SUBMERSIBLE PUMP STATION DEMOLITION PLAN
10. D4 DEMOLITION OF WELL BUILDING AND DESTRUCTION OF EXISTING WELL
11. D5 24-INCH PUMP TO WASTE DISCHARGE STRUCTURE DEMOLITION PLAN
12. D6 LAKE SKIMMER STRUCTURE DEMOLITION PLAN

CIVIL

13 C1 OVERALL GRADING SITE PLAN
14. C2 GRADING PLAN I
15. C3 GRADING PLAN II
16. C4 GRADING PLAN III
17. C5 GRADING PLAN IV
18. C6 BASIN CROSS SECTIONS I
19. C7 BASIN CROSS SECTIONS II
20. C8 CITY OF GARDEN GROVE WELL PUMP TO WASTE LINE
21. C9 ROAD PROFILE FROM STA.10+00.00 TO STA.14+00.00
22. C10 ROAD PROFILE FROM STA.14+00.00 TO STA.17+00.00
23. C11 ROAD PROFILE FROM STA.17+00.00 TO STA.21+00.00
24. C12 ROAD PROFILE FROM STA.21+00.00 TO STA.23+00.00
25. C13 ROAD PROFILE FROM STA.23+00.00 TO STA.27+00.00
26. C14 ROAD PROFILE FROM STA.27+00.00 TO STA.31+00.00
27. C15 ROAD PROFILE FROM STA.31+00.00 TO STA.35+00.00
28 C16 ROAD PROFILE FROM STA.35+00.00 TO STA.37+00.00
29. C17 ROAD PROFILE FROM STA.37+00.00 TO STA.41+00.00
30. C18 ROAD PROFILE FROM STA.41+00.00 TO STA.44+00.00
31. C19 ROAD PROFILE FROM STA.44+00.00 TO STA.48+00.00
32. C20 ROAD PROFILE FROM STA.48+00.00 TO STA.51+15.00
33. C21 FLOOD WALL DETAILS
34. C22 CATCH BASIN DETAILS
35. C23 BASIN DRAIN PIPE AND INLET STRUCTURE
36. C24 HASTER STREET ACCESS ROAD
37. C25 SUMP ACCESS ROAD SECTION
38. C26 ELECTRIC GATE PLAN,SECTION AND DETAILS
39. C27 MANUAL GATE PLAN, SECTION AND DETAILS
40. C28 SWING GATE ELEVATION AND DETAILS
41. C29 CITY OF GARDEN GROVE WELL TEMPORARY BLOW-OFF TO WASTE LINE
42. C30 WATER METER INSTALLATION
43. C31 MECHANICAL BUILDING SECTIONS
44. C32 4-INCH SEWER LINE AND 6-INCH WATERLINE PROFILES

ARCHITECTURAL

45. A1 PUMP STATION BUILDING ELEVATIONS WEST AND NORTH
46. A2 PUMP STATION BUILDING ELEVATIONS EAST AND SOUTH
47. A3 PUMP STATION SLAB INTEFACE PLAN
48. A4 PUMP STATION FIRST FLOOR PLAN
49. A5 PUMP STATION ROOF PLAN
50. A6 PUMP STATION BUILDING SECTIONS EAST AND WEST
51. A7 PUMP STATION BUILDING SECTIONS NORTH AND SOUTH
52. A8 PUMP STATION BUILDING SECTIONS NORTH AND SOUTH
53. A9 HAZARD HOUSE BUILDING ELEVATIONS AND SECTION
54. A10 HAZARD HOUSE SLAB INTERFACE PLAN, FLOOR PLAN AND ROOF PLAN
55. A11 PUMP STATION ARCHITECTURAL DETAILS I
56. A12 PUMP STATION GENERAL NOTES I
57. A13 PUMP STATION GENERAL NOTES 2

STRUCTURAL

58. S1 STRUCTURAL NOTES
59. S2 SUMP FLOOR PLAN
60. S3 BUILDING FLOOR PLAN
61. S4 ROOF FRAMING PLAN
62. S5 PUMP ROOM SECTION A
63. S6 PUMP ROOM SECTION B
64. S7 PUMP ROOM SECTION C
65. S8 PUMP ROOM SECTION D
66. S9 PUMP ROOM SECTION E
67. S10 BUILDING TRUSS ELEVATIONS
68. S11 DETAILS I
69. S12 DETAILS II

MECHANICAL

70. M1 PUMP STATION FLOOR PLAN
71. M2 SUMP PLAN
72. M3 PUMP STATION SECTION
73. M4 ENGINE AND RIGHT ANGLE DRIVE PLAN AND ELEVATION
74. M5 RESTROOM DETAILS
75. M6 ENGINE EXHAUST DETAILS
76. M7 DRIVE SHAFT DETAILS
77. M8 TRENCH DETAILS
78. M9 SUMP PUMP DETAILS
79. M10 SUMP VENTILATION PLAN VENTILATION DETAILS
80. M11 SUMP PUMP BRACKET DETAILS
81. M12 WALL PENETRATION AND HEAT
82. M13 EXCHANGER DETAILS
83. M14 PROPANE STORAGE
84. M15 PROPANE STORAGE DETAILS
85. M16 HAZARD HOUSE
86. M17 ISOMETRIC DIAGRAM AIR LINES

ELECTRICAL

87. E1 ELECTRICAL NOTES
88. E2 SINGLE LINE DIAGRAM
89. E3 ELECTRICAL SITE PLAN
90. E4 LIGHTING PLAN I
91. E5 LIGHTING PLAN (LOWER LEVEL)
92. E6 POWER PLAN (TOP PLAN)
93. E7 MASTER CONTROL/TELEMETRY PANEL MICROCONTROLLER PROGRAMMING LOGIC DIAGRAM I
94. E8 MASTER CONTROL/TELEMETRY PANEL MICROCONTROLLER PROGRAMMING LOGIC DIAGRAM II
95. E9 MASTER CONTROL/TELEMETRY PANEL MICROCONTROLLER PROGRAMMING LADDER DIAGRAM III
96. E10 MICROCONTROLLER ENGINE CONTROL PANEL I/O
97. E11 MASTER PUMP STATION MICROCONTROLLER DIGITAL INPUTS
98. E12 MASTER PUMP STATION MICROCONTROLLER DIGITAL AND ANALOG I/O
99. E13 SUMP PUMP 1 CONTROL DIAGRAM AND PANEL LAYOUT
100. E14 SUMP PUMP 2 CONTROL DIAGRAM AND PANEL LAYOUT
101. E15 SLICE GATE ACTUATOR DIAGRAM
102. E16 GROUNDING PLAN AND DETAILS
103. E17 SCE ELECTRICAL DETAILS
104. I-1 PROCESS AND INSTRUMENTATION DIAGRAM

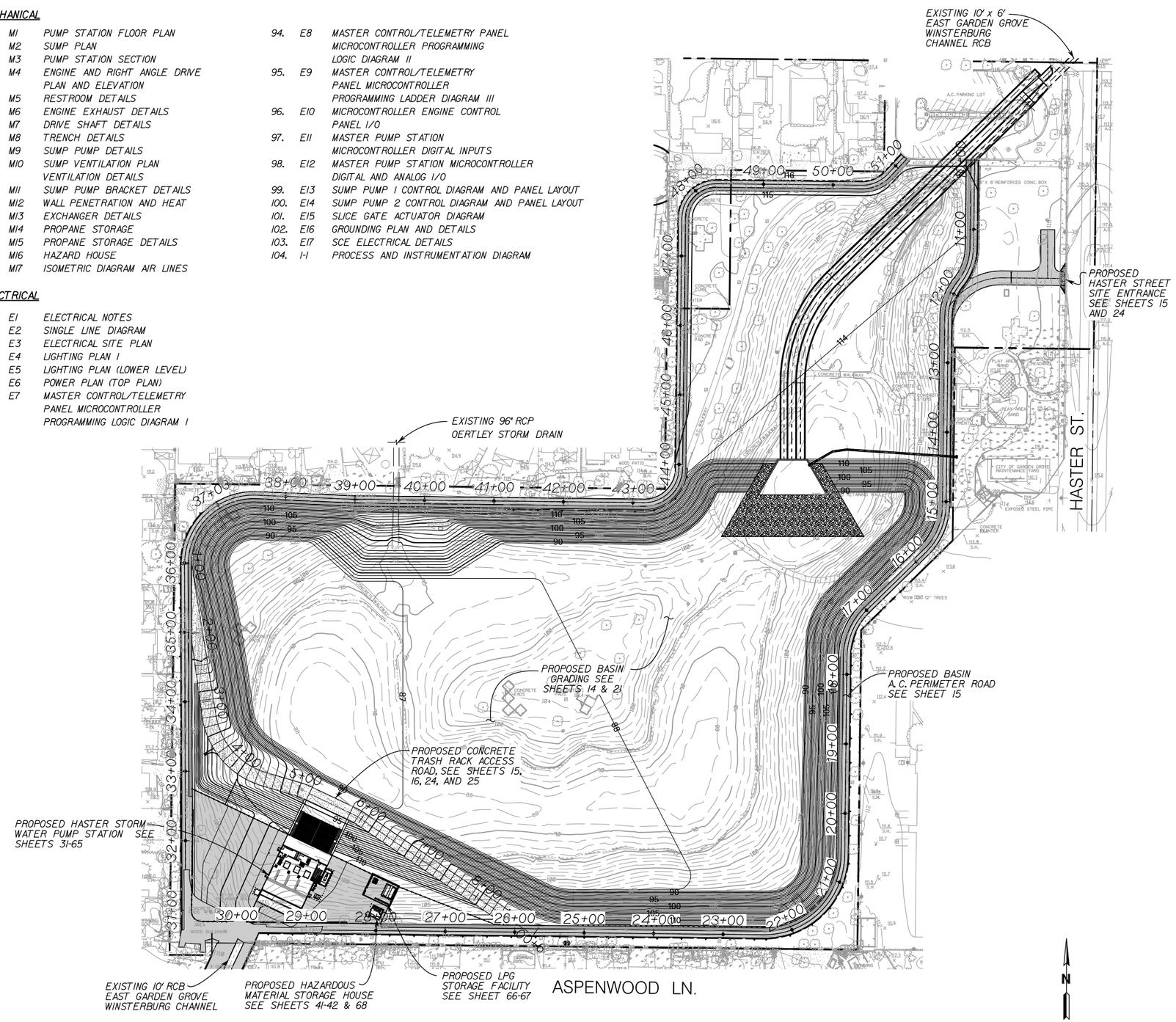

INDEX MAP

COUNTY OF ORANGE CALIFORNIA

MARK	DESCRIPTION	DATE	APPR.

PREPARED UNDER THE RESPONSIBLE CHARGE OF:

REGISTERED PROFESSIONAL ENGINEER JOHN A. LOAGUE No. 50092 Exp. 6/30/09 CIVIL STATE OF CALIFORNIA

DATE

DESIGNED BY:

DRAWN BY: CADD

CHECKED BY: JOHN LOAGUE

DRAWING CODE: F06-101-7

FILE NAME: -

PLOT DATE: ##DATE#

SCALE: AS SHOWN

OC PUBLIC WORKS

PREPARED BY: AKM CONSULTING ENGINEERS

HASTER RETARDING BASIN (C05902) PUMP STATION

INDEX OF DRAWINGS

Sheet Reference Number

G-2

ABBREVIATIONS AND SYMBOLS

AB	AGGREGATE BASE
AC	ASPHALT CONCRETE
APPROX	APPROXIMATE
ANG	ANGLE
AT&T	AMERICAN TELEPHONE & TELEGRAH
BC	BEGIN CURVE
BEG	BEGIN
BOT	BOTTOM
CAB	CRUSHED AGGREGATE BASE
CML&C	CEMENT MOTAR LINED AND COATED
CML	CEMENT MORTOR LINED
CONC	CONCRETE
CL	CENTER LINE
CULV	CULVERT
DIA	DIAMETER
DIP	DUCTILE IRON PIPE
DW	DOMESTIC WATER
E	EAST
EC	END CURVE
ECC	ECCENTRIC
EF	EACH FACE
EL	ELEVATION
EP	EDGE OF PAVEMENT
ETC	ETCETERAS
EXIST	EXISTING
FF	FINISHED FLOOR
FG	FINISHED GROUND
FL	FLOW LINE
FLG'D	FLANGED
FNPT	FEMALE NATIONAL PIPE THREAD
FS	FINISHED SURFACE
GGWD	GARDEN GROVE WATER DEPARTMENT
HORIZ	HORIZONTAL
HP	HIGH POINT
IE	INVERT ELEVATION
INT	INTERSECTION
INV	INVERT
JS	JUNCTION STRUCTURE
L	LENGTH
LT	LEFT
LPG	LIQUID PETROLEUM GAS
MAX	MAXIMUM
MIN	MINIMUM
MJ	MECHANICAL JOINT
N	NORTH
NG	NATURAL GAS
NO	NORMALLY OPEN
NPT	NATIONAL PIPE THREAD
NTS	NOT TO SCALE
OCFCD	ORANGE COUNTY FLOOD CONTROL DISTRICT
PCC	PORTLAND CEMENT CONCRETE
PL	PROPERTY LINE
PSD	PUMPED STORM DRAIN
PT	POINT
PVI	POINT OF VERTICAL INTERSECTION
PVMT	PAVEMENT
RDMD	RESOURCES AND DEVELOPMENT MANAGEMENT DEPARTMENT
R	RADIUS
RT	RIGHT
RCB	REINFORCED CONCRETE BOX
RCP	REINFORCED CONCRETE PIPE
REINF	REINFORCING
RET	RETAINING
R/W	RIGHT OF WAY
S	SLOPE
SCE	SOUTHERN CALIFORNIA EDISON
SCL	SURVEY CONTROL LINE
SCH	SCHEDULE
SD	STORM DRAIN
SDMH	STORM DRAIN MANHOLE
SFM	SEWER FORCE MAIN
SHT	SHEET
ST	STREET
STA	STATION
STD	STANDARD
T	TANGENT
TC	TOP CURB
TF	TOP FOOTING
TOC	TOP OF CONCRETE
TW	TOP WALL
TYP	TYPICAL

ABBREVIATIONS AND SYMBOLS

V	VELOCITY
VAR	VARIES
VERT	VERTICAL
W	WATER
WWF	WELDED WIRE FABRIC
WS	WATER SURFACE
W/	WITH
@	AT
&	AND
XFMR	TRANSFORMER

SYMBOLS

	CENTERLINE
	PROPERTY LINE
	NEW STRUCTURE OR FACILITY
	EXISTING STRUCTURE OR FACILITY
	NEW FENCE
x	EXISTING FENCE
10	CONTOUR LINE, FINISHED GRADE
10.00 TC / 10.00 FL	FINISHED SPOT ELEVATION
10.00 TC	EXISTING SPOT ELEVATION
E	EXISTING UNDERGROUND ELECTRIC POWER
C	EXISTING CABLE TV LINE
T	EXISTING TELEPHONE LINE
G	EXISTING GAS MAIN
PP	EXISTING POWER POLE
TP	EXISTING TELEPHONE POLE
E	EXISTING OVERHEAD ELECTRICIAL (CALLOUT ON PLANS IF LESS THAN 12' HIGH)
EXST PVMT	EXISTING PAVEMENT
	LOT LINE
	CURB & GUTTER
	EASEMENT LINE
	AIR VAC VALVE ASSEMBLY
	BLOWOFF ASSEMBLY

SYMBOLS

	BUSHES, TREES, GROUND COVER
	MARSH OR SWAMP
	NEW ASPHALT PAVEMENT
	NEW CONCRETE PAVEMENT

POWER POLE LEGEND

	- EXIST POLE TO BE REMOVED
	- EXIST POLE TO REMAIN (PROTECT IN PLACE)
	- PROPOSED NEW POLE

COUNTY OF ORANGE CALIFORNIA

MARK	DESCRIPTION	DATE	APPR.

PREPARED UNDER THE RESPONSIBLE CHARGE OF:

REGISTERED PROFESSIONAL ENGINEER JOHN A. LOAGUE No. 50292 Exp. 6/30/09 CIVIL STATE OF CALIFORNIA

DATE

DESIGNED BY:

DRAWN BY: CADD

CHECKED BY: JOHN LOAGUE

DRAWING CODE: F06-101-7

FILE NAME: -

PLOT DATE: $DATE$

SCALE: AS SHOWN

OC PUBLIC WORKS

PREPARED BY: AGM CONSULTING ENGINEERS

HASTER RETARDING BASIN (C05B02) PUMP STATION

LEGENDS, SYMBOLS AND ABBREVIATIONS

Sheet Reference Number

G-3

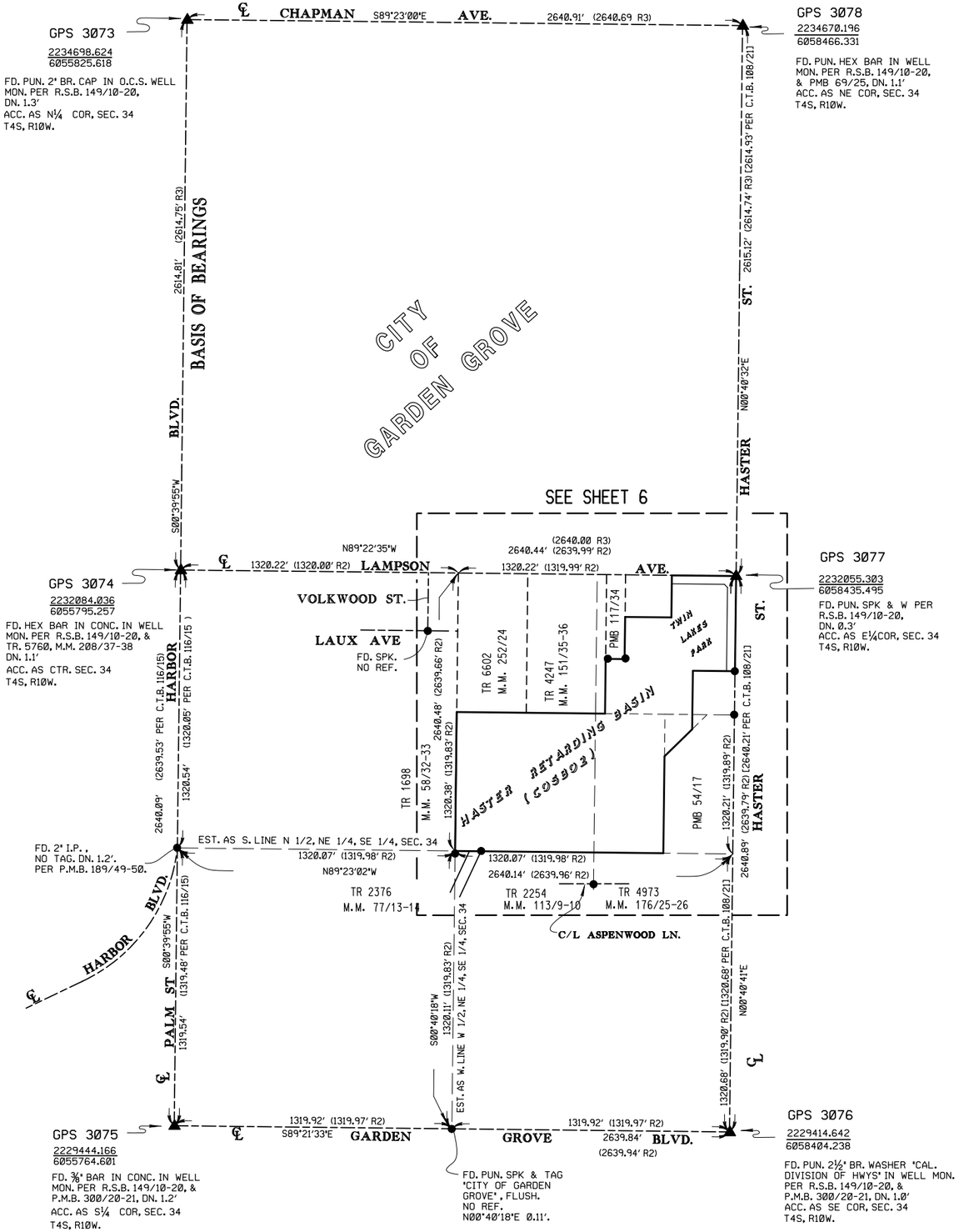

REFERENCE

[R1] = RECORD PER 5855/862 O.R.
[R2] = RECORD PER TR. 4973, M.M. 176/25-26
[R3] = RECORD PER TR. 2012, M.M. 55/47-49
[R4] = RECORD PER TRACT 1698 M.M. 58/32-33

HORIZONTAL DATUM

THE BEARINGS AND DISTANCES SHOWN HEREON ARE TO BE USED FOR TOPOGRAPHIC RELATIONSHIPS ONLY AND ARE NOT INTENDED FOR LAND ACQUISITION OR BOUNDARY PURPOSES.

A RECORD OF SURVEY IS RECOMMENDED PRIOR TO ANY FUTURE PROPERTY ACQUISITIONS.

HORIZONTAL DATUM

COORDINATES ARE BASED ON THE CALIF. COORDINATE SYSTEM (CCS83), ZONE 6, 1983 NORTH AMERICAN DATUM (1991.35 EPOCH, O.C.S. GPS ADJUSTMENT).

ALL DISTANCES SHOWN ARE GROUND, UNLESS OTHERWISE NOTED. TO OBTAIN GRID DISTANCE MULTIPLY GROUND DISTANCE BY 0.99998432.

BASIS OF BEARINGS

THE BEARINGS SHOWN HEREON ARE BASED ON THE BEARING BETWEEN O.C.S. HORIZONTAL CONTROL STATION GPS NO. 3073 AND STATION GPS NO. 3074, BEING S00°39'55"W, PER RECORDS ON FILE IN THE OFFICE OF THE ORANGE COUNTY SURVEYOR.

N

300 150 0 300 600

SCALE IN FEET
1 inch = 300 ft.

COUNTY OF ORANGE CALIFORNIA

MARK	DESCRIPTION	DATE	APPR.

PREPARED UNDER THE RESPONSIBLE CHARGE OF:

REGISTERED PROFESSIONAL ENGINEER JOHN A. LOAGUE No. 50092 Exp. 6/30/09 CIVIL STATE OF CALIFORNIA

DATE

DESIGNED BY: GLEBE DEITER
DRAWN BY: CADD
CHECKED BY: JOHN LOAGUE
DRAWING CODE: F06-101-7
FILE NAME: -
PLOT DATE: $DATE$
SCALE: AS SHOWN

OC PUBLIC WORKS

PREPARED BY: AKM CONSULTING ENGINEERS

HASTER RETARDING BASIN (COSBO2) PUMP STATION

SURVEY MAP I

Sheet Reference Number

G-4

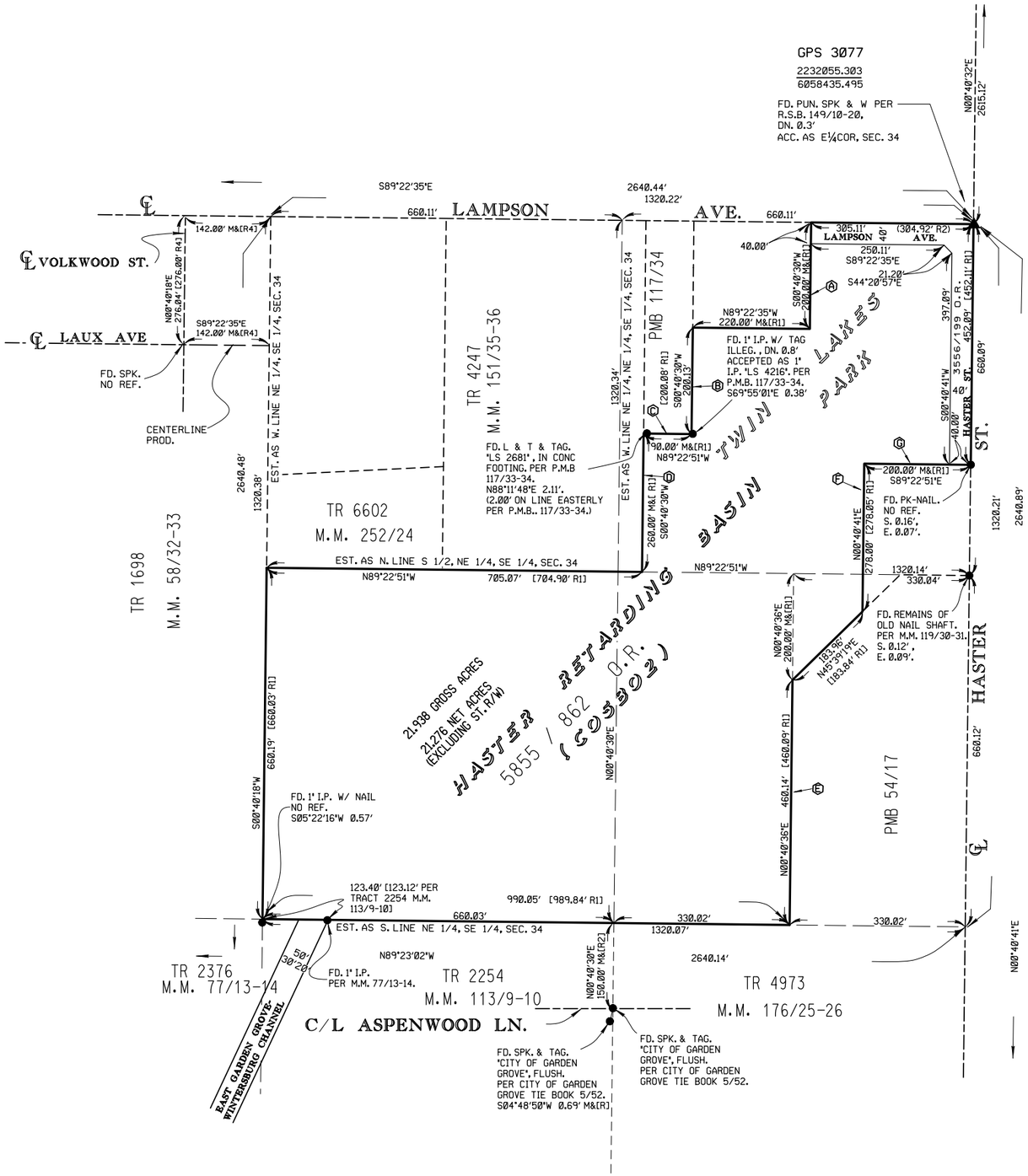

REFERENCE

[R1] = RECORD PER 5855/862 O.R.
[R2] = RECORD PER TR. 4973, M.M. 176/25-26
[R3] = RECORD PER TR. 2012, M.M. 55/47-49
[R4] = RECORD PER TRACT 1698 M.M. 58/32-33

SECTION LINE REFERENCE

Ⓐ = EST. AS E. LINE OF WEST 355' OF NE 1/4, NE 1/4, SE 1/4, SEC. 34.

Ⓑ = EST. AS E. LINE OF WEST 135' OF NE 1/4, NE 1/4, SE 1/4, SEC. 34.

Ⓒ = EST. AS N. LINE OF SOUTH 260' OF NE 1/4, NE 1/4, SE 1/4, SEC. 34.

Ⓓ = EST. AS E. LINE OF WEST 45' OF NE 1/4, NE 1/4, SE 1/4, SEC. 34.

Ⓔ = EST AS W. LINE OF EAST 1/2, OF SE 1/4, NE 1/4, SE 1/4, SEC. 34.

Ⓕ = EST. AS W. LINE OF EAST 200' OF NE 1/4, SE 1/4, SEC. 34

Ⓖ = EST. AS N. LINE OF SOUTH 208' OF NE 1/4, NE 1/4, SE 1/4, SEC. 34

COUNTY OF ORANGE CALIFORNIA

MARK	DESCRIPTION	DATE	APPR.

PREPARED UNDER THE RESPONSIBLE CHARGE OF:

REGISTERED PROFESSIONAL ENGINEER JOHN A. LOAGUE No. 50092 Exp. 6/30/09 CIVIL STATE OF CALIFORNIA

DATE

DESIGNED BY: GLEEE DEITER
DRAWN BY: CADD
CHECKED BY: JOHN LOAGUE
DRAWING CODE: F06-101-7
FILE NAME: -
PLOT DATE: $DATE$
SCALE: AS SHOWN

OC PUBLIC WORKS

PREPARED BY: AKM CONSULTING ENGINEERS

HASTER RETARDING BASIN (C05802) PUMP STATION

SURVEY MAP II

Sheet Reference Number

G-5

DEMOLITION NOTES

ITEM	DESCRIPTION	QTY
1	REMOVE EXISTING A.C. PARK PERIMETER ROAD AND RIDING TRAIL	30,000 SQ FT
2	DEMO 2500 GPM LAKE SUBMERSIBLE PUMP STATION PER SHEET 9	1
3	DEMO 24-INCH PUMP STATION INTAKE	250 LF
4	DESTROY 200-FT. LAKE FILL/RECIRCULATION WELL PER SHEET 8	1
5	DEMO 4-INCH AND 6-INCH PVC FILL/RECIRCULATION PIPE (ABANDONED)	2,600 LF
6	PARTIAL DEMO OF 24-INCH RCP CITY OF GARDEN GROVE DOMESTIC WELL. PUMP TO WASTE DISCHARGE PIPE. SEE DETAILS ON SHEET 11. INSTALL NEW TEMPORARY LINE PRIOR TO DEMO	100 LF
7	DEMO 10-INCH ACP AND 12-INCH ACP LOW FLOW DIVERSION SUCTION PIPE (ABANDON)	1200 LF
8	DEMO 8' x 10' TO 8' HIGH, LOW FLOW DIVERSION PUMP STATION POURED IN PLACE VAULT FILLED WITH PEA GRAVEL (ABANDONED)	1
9	DEMO 12-INCH ACP LOW FLOW DIVERSION DISCHARGE PIPE (ABANDONED)	600 LF
10	DEMO 4-INCH AND 6-INCH PVC IRRIGATION PUMP INTAKE PIPE	350LF
11	DEMO EXISTING TRASH RACK	1
12	DEMO LOW FLOW DIVERSION/IRRIGATION SYSTEM ELECTRICAL SERVICE AND PANELS	1
13	DEMO IRRIGATION PUMP 2 AND 3 ELECTRIC SERVICE PANEL AND CONDUIT	1
14	DEMO PACKAGED 4-INCH IRRIGATION PUMP SYSTEM	3
15	3'-6" x 5'-0" JUNCTION BOX AND 18" CMP LINES IN AND OUT (PROTECT IN PLACE)	1
16	RELOCATE EXISTING PARK SIGN AND CONCRETE PAD	1
17	EXISTING PICNIC BENCH AND CONCRETE PAD TO BE REMOVED	21
18	EXISTING EXERCISE STATION TO BE REMOVED	4
19	10-INCH DI AND 12-INCH ACP SUBMERSIBLE PUMP STATION DISCHARGE PIPE TO BE REMOVED.	60 LF
20	-	-
21	LAKE SKIMMERS TO BE REMOVED. SEE SHEET 12 FOR DEMOLITION PLAN	3
22	24-INCH DRAIN STRUCTURE FROM CITY OF GARDEN GROVE WELL #29. FOR DEMOLITION PLAN SEE SHEET 11.	1
23	DEMO CONCRETE WALKWAY	16,000 SQ FT
24	REMOVE EXISTING SCE SERVICE POLE. COORDINATE WITH SCE	1
25	REMOVE EXISTING A.C. PAVEMENT	10,100 SQ FT
26	REMOVE EXISTING CHAIN LINK FENCE	900 LF
27	REMOVE EXISTING RAILING	220 LF

TREE DESCRIPTION	QUANTITY
DIAMETER ≤ 5"	10
5"< DIAMETER ≤ 10"	11
10" DIAMETER ≤ 15"	44
15" DIAMETER ≤ 20"	36
20" DIAMETER ≤ 25"	9
TREE ABOVE 25" DIAMETER	1

LEGEND

- EXISTING TREE TO PROTECT IN PLACE
- EXISTING TREE TO REMOVE
- EXISTING AC WALKWAY TO BE REMOVED
- EXISTING CONCRETE WALKWAY TO BE REMOVED

COUNTY OF ORANGE CALIFORNIA

MARK	DESCRIPTION	DATE	APPR.

PREPARED UNDER THE RESPONSIBLE CHARGE OF:

REGISTERED PROFESSIONAL ENGINEER JOHN A. LOAGUE No. 50092 Exp. 6/30/09 CIVIL STATE OF CALIFORNIA

DATE

DESIGNED BY:
DRAWN BY: CADD
CHECKED BY: JOHN LOAGUE
DRAWING CODE: F06-101-7
FILE NAME:
PLOT DATE: $DATE$
SCALE: AS SHOWN

OC PUBLIC WORKS

PREPARED BY: AKM CONSULTING ENGINEERS

HASTER RETARDING BASIN (C05B02) PUMP STATION

DEMOLITION SITE PLAN

Sheet Reference Number

D-1

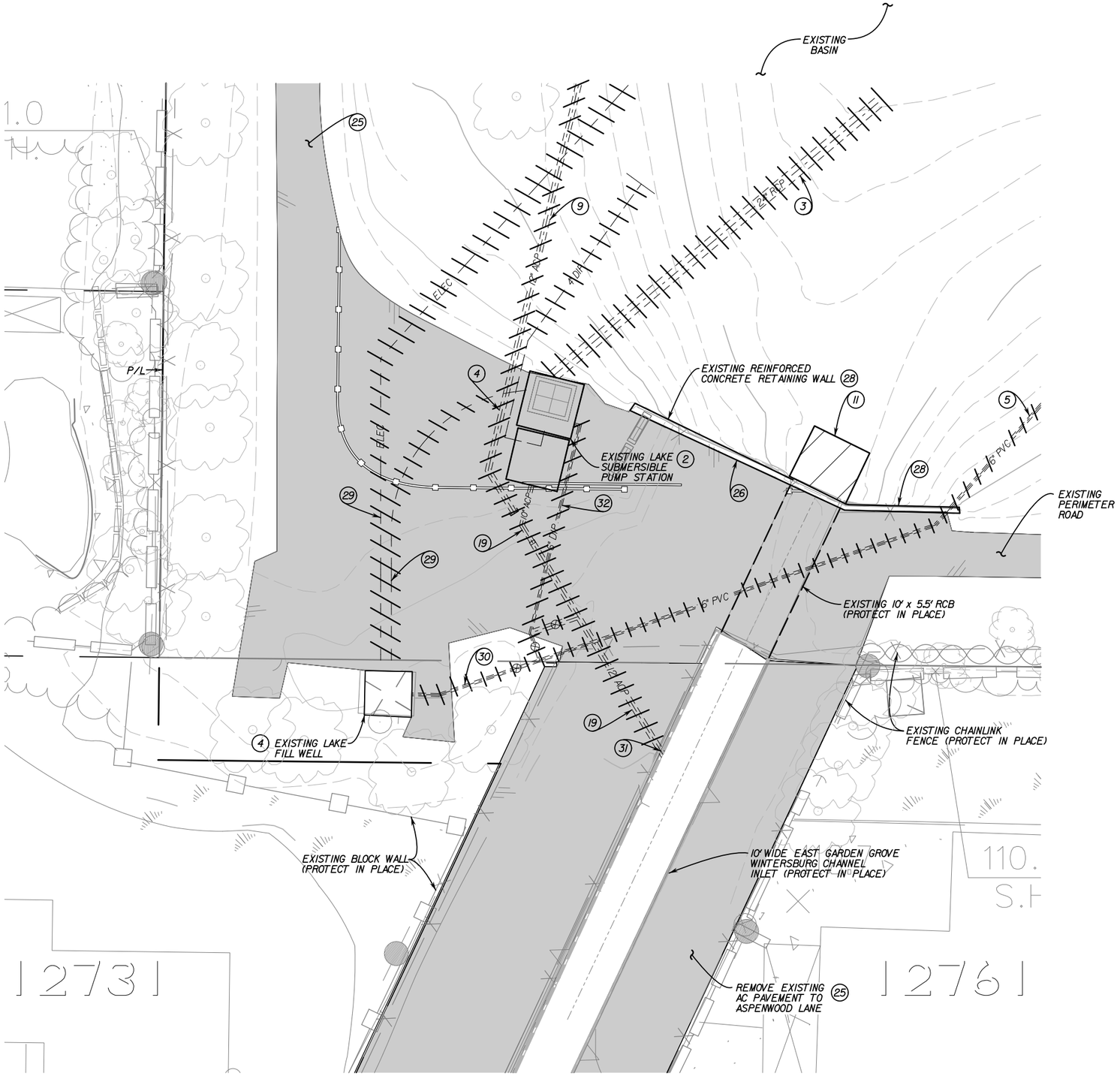

DEMOLITION NOTES

ITEM	DESCRIPTION	QTY
2	DEMO 2500 GPM LAKE SUBMERSIBLE PUMP STATION PER SHEET 9	1
3	DEMO 24-INCH PUMP STATION INTAKE	250 LF
4	DESTROY 200-FT. LAKE FILL/RECIRCULATION WELL PER SHEET 10	1
5	DEMO 4-INCH AND 6-INCH PVC FILL/RECIRCULATION PIPE (ABANDONED)	2,600 LF
9	DEMO 12-INCH ACP LOW FLOW DIVERSION DISCHARGE PIPE (ABANDONED)	600 LF
11	DEMO EXISTING TRASH RACK	1
19	10-INCH DI AND 12-INCH ACP SUBMERSIBLE PUMP STATION DISCHARGE PIPE TO BE REMOVED.	60 LF
25	REMOVE EXISTING A.C. PAVEMENT	10,100 SQ FT
26	REMOVE EXISTING CHAIN LINK FENCE	870 LF
28	REMOVE EXISTING REINFORCED RETAINING WALL	870 LF
29	DEMO 1-INCH ELECTRICAL CONDUIT	
30	DEMO 6-INCH STEEL FILL LINE	
31	-	
32	DEMO EXISTING 6" DIP	44 LF

N

20 10 0 20 40

SCALE IN FEET
1 Inch = 10 ft.

COUNTY OF ORANGE CALIFORNIA

MARK	DESCRIPTION	DATE	APPR.

PREPARED UNDER THE RESPONSIBLE CHARGE OF:

REGISTERED PROFESSIONAL ENGINEER JOHN A. LOAGUE No. 50092 Exp. 6/30/09 CIVIL STATE OF CALIFORNIA

DATE

DESIGNED BY:

DRAWN BY: CADD

CHECKED BY: JOHN LOAGUE

DRAWING CODE: F06-101-7

FILE NAME: -

PLOT DATE: $DATE$

SCALE: AS SHOWN

OC PUBLIC WORKS

PREPARED BY: AGM CONSULTING ENGINEERS

HASTER RETARDING BASIN (C05802) PUMP STATION

DEMOLITION PLAN SOUTHWEST CORNER OF HASTER BASIN

Sheet Reference Number

D-2

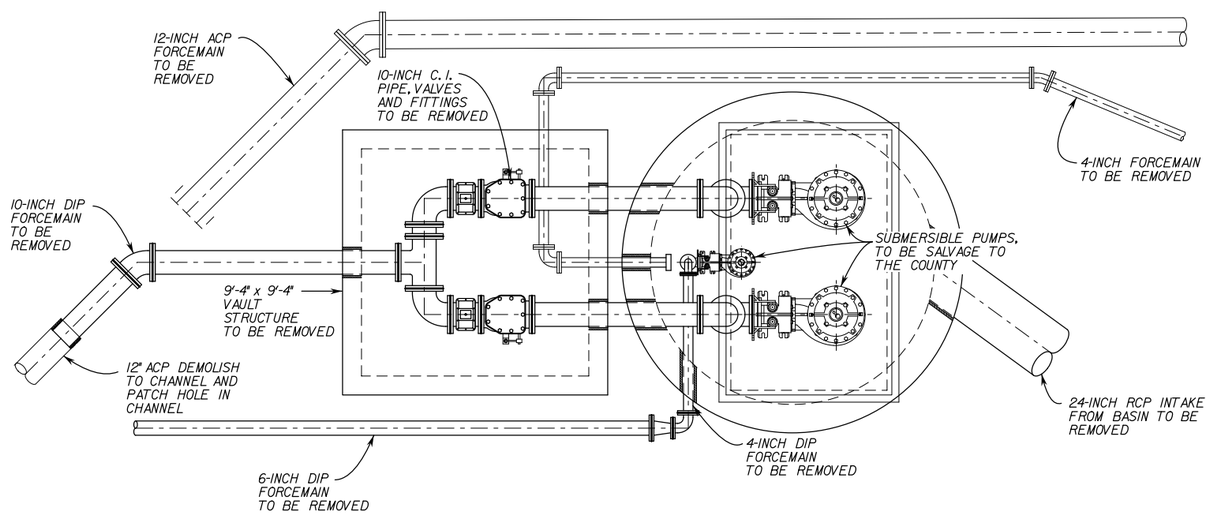

EXISTING LAKE SUBMERSIBLE PUMP STATION PLAN

SCALE: 3/8" = 1'-0"

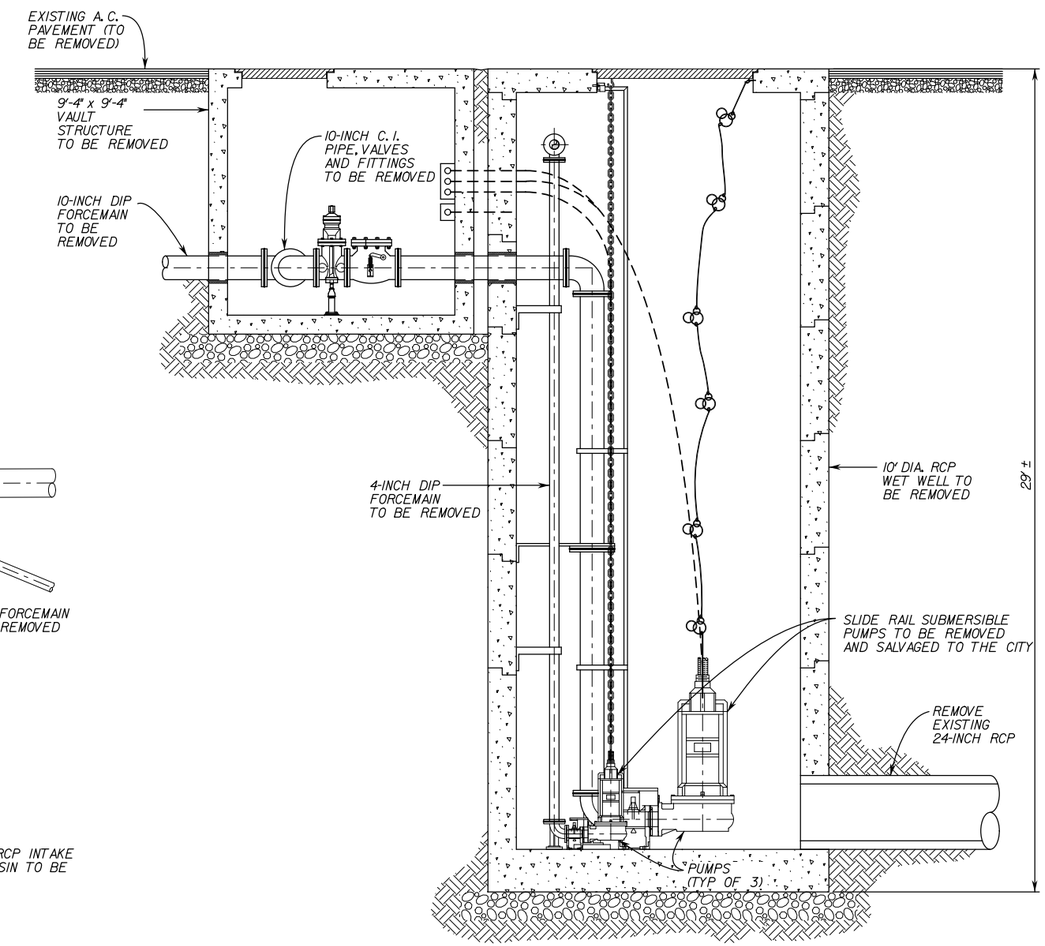

EXISTING LAKE SUBMERSIBLE PUMP STATION SECTION

SCALE: 3/8" = 1'-0"

NOTES:

1. DEMOLISH ALL STRUCTURES, PIPINGS, ELECTRICAL AND APPURTENANCES
2. THE PLANS SHOW ONLY THE MAJOR COMPONENTS LOCATED WITHIN THE PUMP STATION. THE CONTRACTOR SHALL REMAIN RESPONSIBLE FOR REMOVING ALL MATERIAL AND EQUIPMENT LOCATED WITHIN THE PUMP STATION BUT NOT SHOWN, INCLUDING CONDUIT, WIRE, LIGHTS, AND MISCELLANEOUS PIPING.
3. NOTIFY ORANGE COUNTY PUBLIC WORKS 72 HOURS IN ADVANCE OF DEMOLITION WORK.
4. EXISTING PUMPS SHALL BE REMOVED AND DELIVERED TO THE COUNTY OF ORANGE MAINTENANCE YARD BY THE CONTRACTOR AT NO ADDITIONAL COST TO THE COUNTY.
5. BACKFILL AND COMPACT PUMP STATION AREA AFTER DEMOLITION.
6. FOR CONTINUATION OF EXISTING PIPING TO BE REMOVED SEE SHEET 8.

COUNTY OF ORANGE CALIFORNIA

MARK	DESCRIPTION	DATE	APPR.

PREPARED UNDER THE RESPONSIBLE CHARGE OF:

REGISTERED PROFESSIONAL ENGINEER JOHN A. LOAGUE No. 50092 Exp. 6/30/09 CIVIL STATE OF CALIFORNIA

DATE

DESIGNED BY:

DRAWN BY: CADD

CHECKED BY: JOHN LOAGUE

DRAWING CODE: F06-101-7

FILE NAME: -

PLOT DATE: $DATE$

SCALE: AS SHOWN

OC PUBLIC WORKS

PREPARED BY: AKM CONSULTING ENGINEERS

HASTER RETARDING BASIN (C05B02) PUMP STATION

LAKE SUBMERSIBLE PUMP SATION DEMOLITION PLAN

Sheet Reference Number

D-3

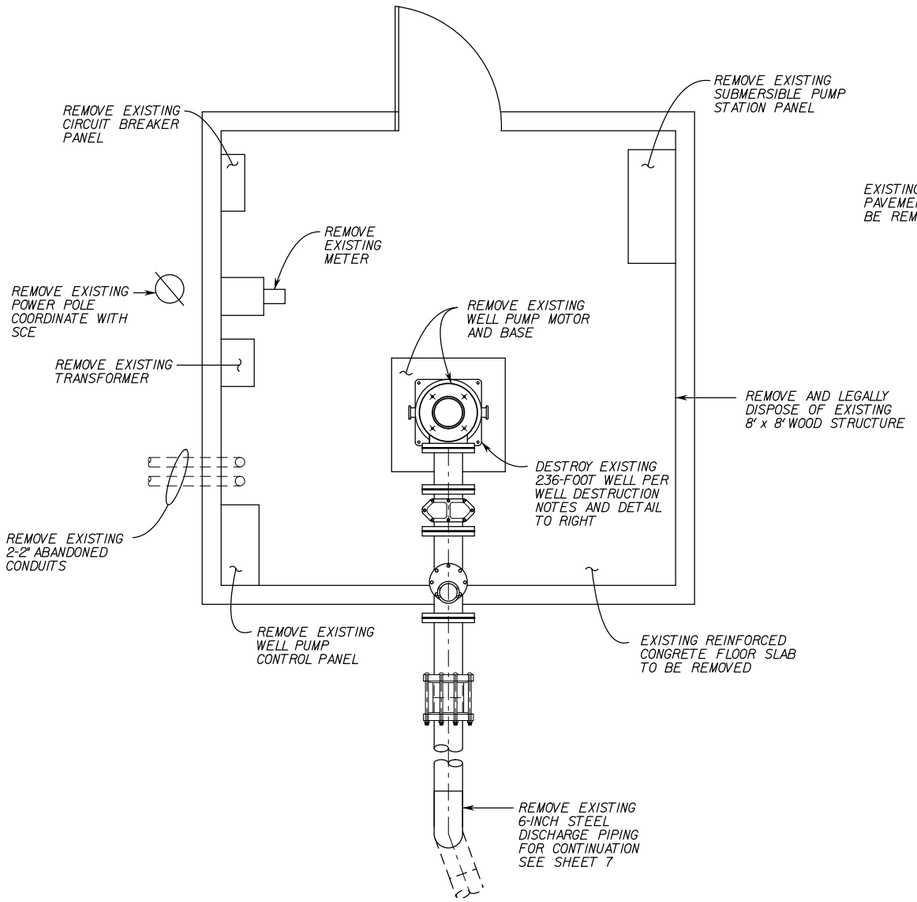

LAKE FILL WELL PLAN

SCALE: 3/4" = 1'-0"

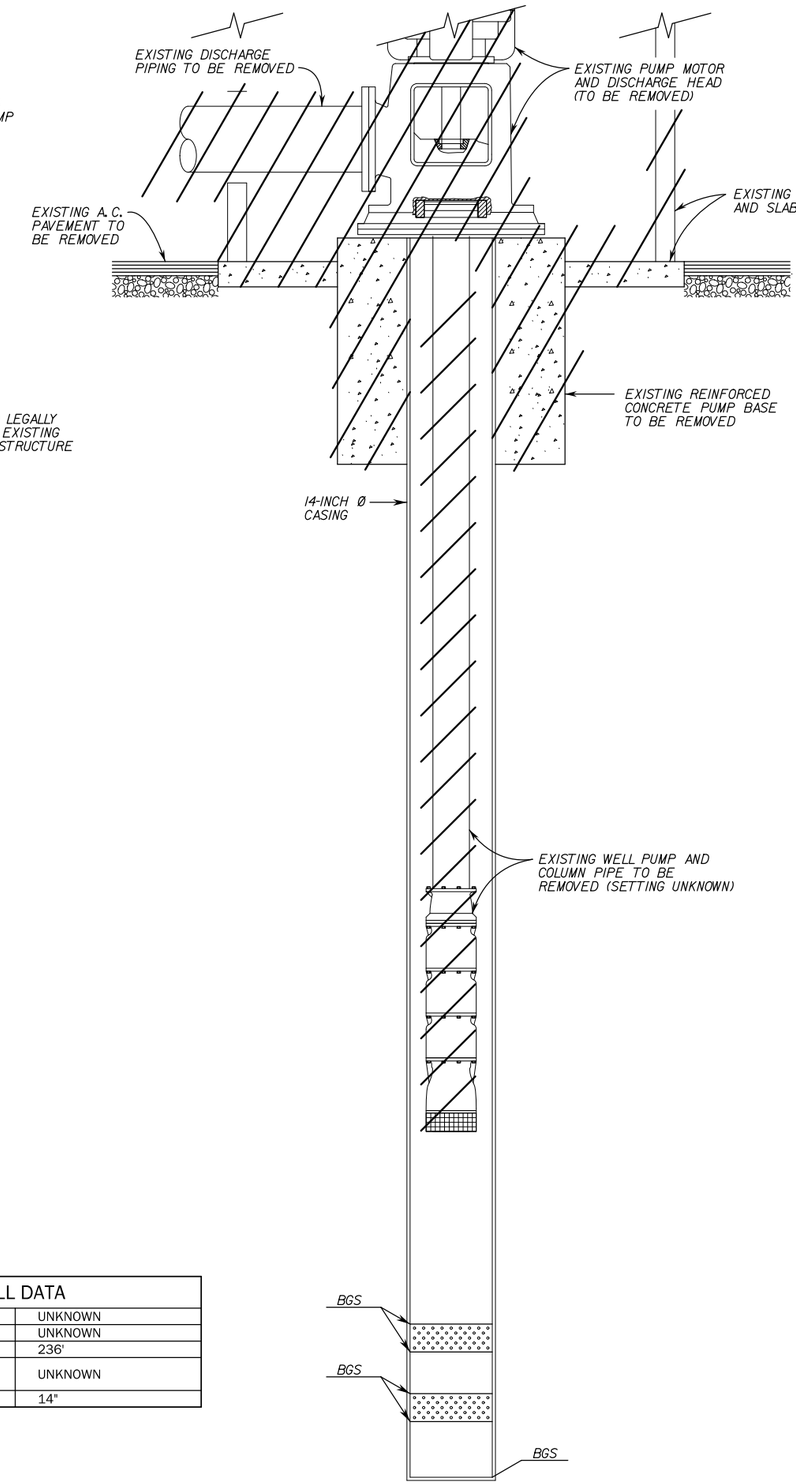

EXISTING WELL SECTION

NOT TO SCALE

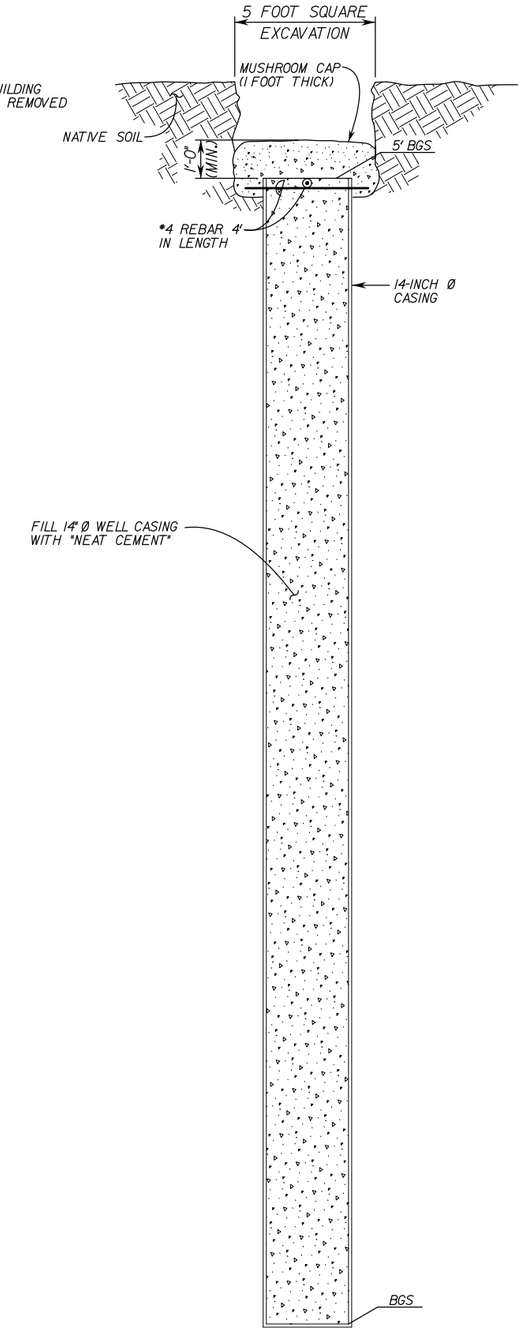

PROPERLY DESTRUCTED WELL SECTION

NOT TO SCALE

WELL DESTRUCTION NOTES

1. COMPLETE THE "APPLICATION FOR WELL DESTRUCTION PERMIT" AND HAVE A CITY OF GARDEN GROVE REPRESENTATIVE SIGN THE PERMIT AND SUBMIT TO ORANGE COUNTY HEALTH CARE AGENCY.
2. CONTRACTOR MUST HAVE A C-57 LICENSE.
3. REMOVE ALL OBSTRUCTIONS, CONTAMINANTS, AND PUMPING APPARATUS FROM THE WELL CASING BY WIRE BRUSHING AND BAILING
4. CONDUCT COLOR VIDEO SURVEY TO EXAMINE THE PHYSICAL CONDITION OF THE CASING.
5. EXCAVATE AROUND CASING, A MINIMUM OF SIX (6) FEET DEEP. CUT CASING ONE (1) FOOT ABOVE EXCAVATION.
6. DRILL FOUR (4) HOLES IN THE CASING AND INSTALL #4 REBAR 4 FEET IN LENGTH
7. FILL THE EXCAVATION TO GRADE.
8. WELL DESTRUCTION SHALL COMPLY WITH THE STATE OF CALIFORNIA WATER WELL STANDARDS SECTION 23.

WELL DATA	
DRILLED BY:	UNKNOWN
METHOD OF DRILLING:	UNKNOWN
TOTAL DEPTH:	236'
PERFORATED:	UNKNOWN
WELL DIAMETER	14"

INDICATES MATERIAL OR EQUIPMENT TO BE REMOVED BY THE CONTRACTOR.

COUNTY OF ORANGE CALIFORNIA

MARK	DESCRIPTION	DATE	APPR.

PREPARED UNDER THE RESPONSIBLE CHARGE OF:

REGISTERED PROFESSIONAL ENGINEER JOHN A. LOAGUE No. 50292 Exp. 6/30/09 CIVIL STATE OF CALIFORNIA

DATE

DESIGNED BY:
DRAWN BY: CADD
CHECKED BY: JOHN LOAGUE
DRAWING CODE: F06-101-7
FILE NAME: -
PLOT DATE: $DATE$
SCALE: AS SHOWN

OC PUBLIC WORKS

PREPARED BY: AKM CONSULTING ENGINEERS

HASTER RETARDING BASIN (C05802) PUMP STATION

DEMOLITION OF WELL BUILDING AND DESTRUCTION OF EXISTING WELL

Sheet Reference Number

D-4

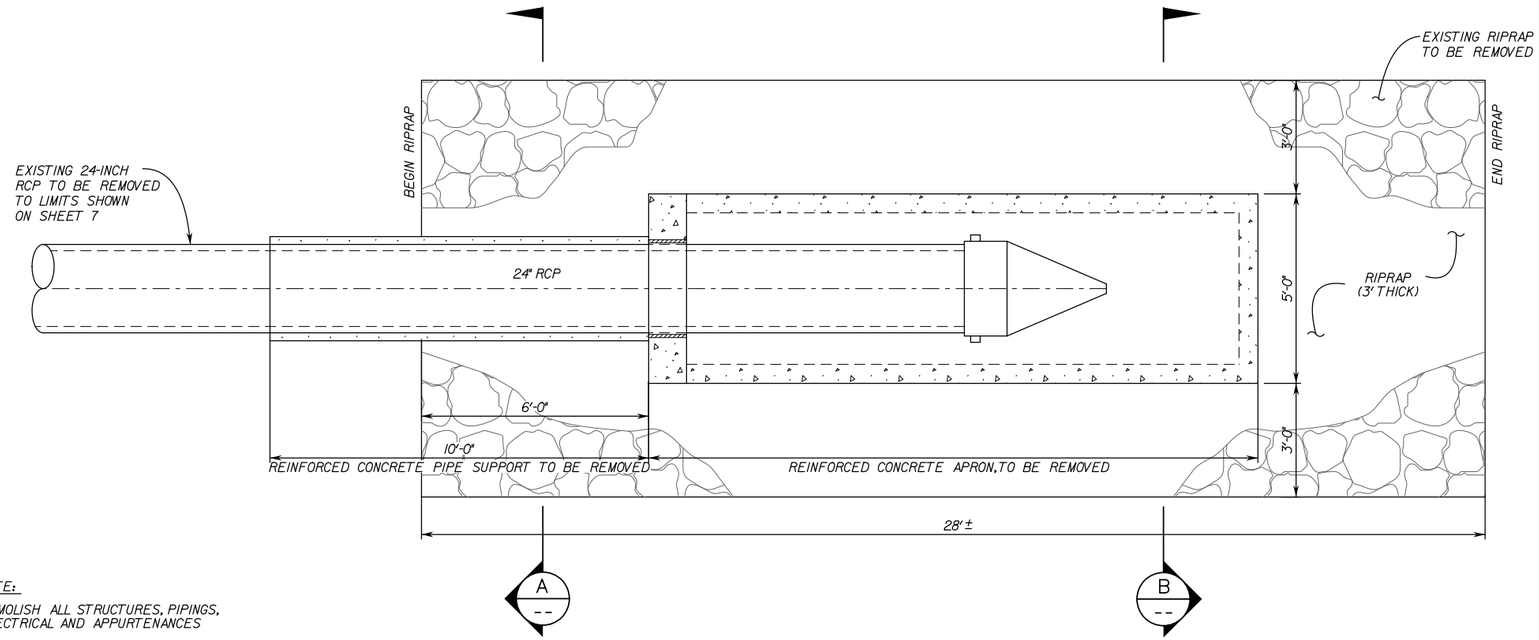

NOTE:

DEMOLISH ALL STRUCTURES, PIPINGS, ELECTRICAL AND APPURTENANCES

PLAN

SCALE: 1/2" = 1'-0"

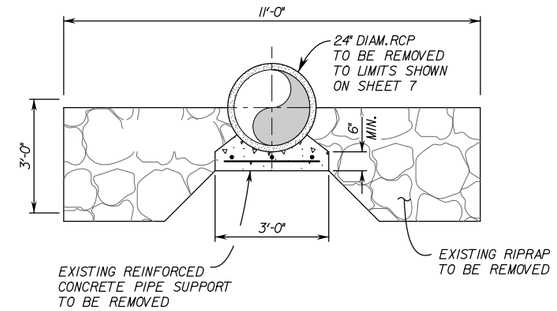

SECTION A

SCALE: 1/2" = 1'-0"

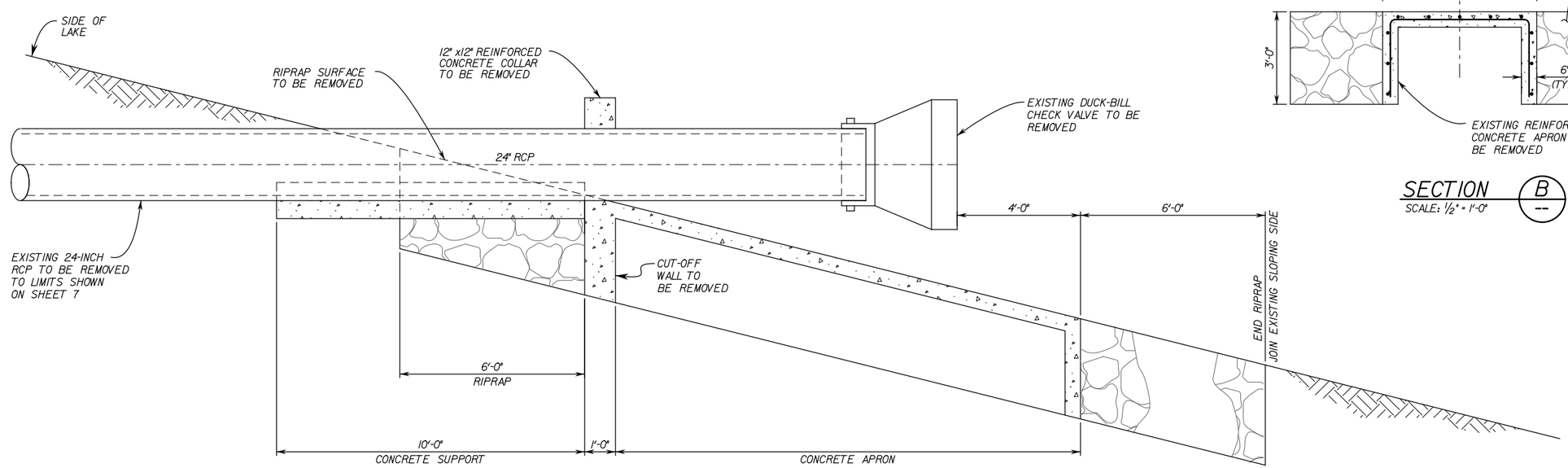

NOTES:

1. DEMOLISH ALL STRUCTURE, PIPING, AND APPURTENANCES.
2. NOTIFY CITY OF GARDEN GROVE AND ORANGE COUNTY PUBLIC WORKS 72 HOURS IN ADVANCE OF DEMOLITION.
3. BACKFILL AND COMPACT DISCHARGE STRUCTURE AREA AFTER DEMOLITION.

ELEVATION

SCALE: 1/2" = 1'-0"

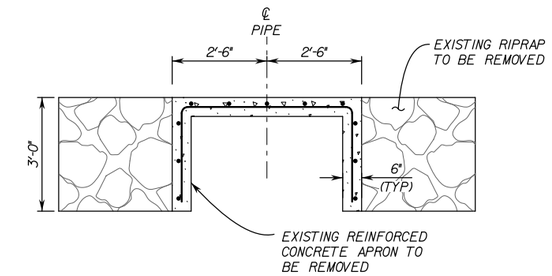

SECTION B

SCALE: 1/2" = 1'-0"

COUNTY OF ORANGE CALIFORNIA

MARK	DESCRIPTION	DATE	APPR.

PREPARED UNDER THE RESPONSIBLE CHARGE OF:

REGISTERED PROFESSIONAL ENGINEER JOHN A. LOAGUE No. 50092 Exp. 6/30/09 CIVIL STATE OF CALIFORNIA

DATE

DESIGNED BY:

DRAWN BY: CADD

CHECKED BY: JOHN LOAGUE

DRAWING CODE: F06-101-7

FILE NAME: -

PLOT DATE: $DATE$

SCALE: AS SHOWN

OC PUBLIC WORKS

PREPARED BY: AGM CONSULTING ENGINEERS

HASTER RETARDING BASIN (C05B02) PUMP STATION

24-INCH PUMP TO WASTE DISCHARGE STRUCTURE DEMOLITION PLAN

Sheet Reference Number

D-5

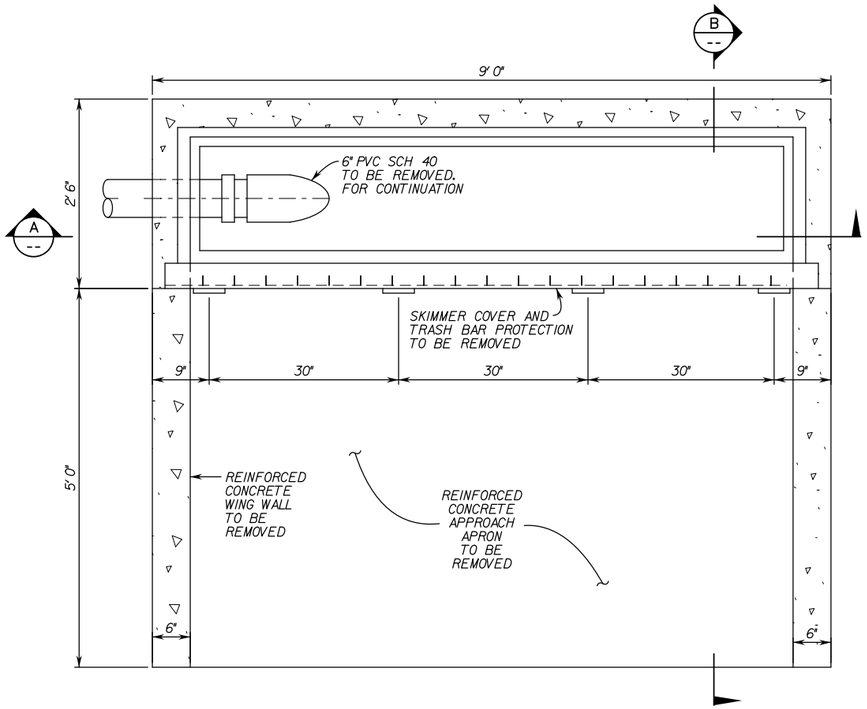

SKIMMER STRUCTURE PLAN

SCALE: 1" = 1'-0"

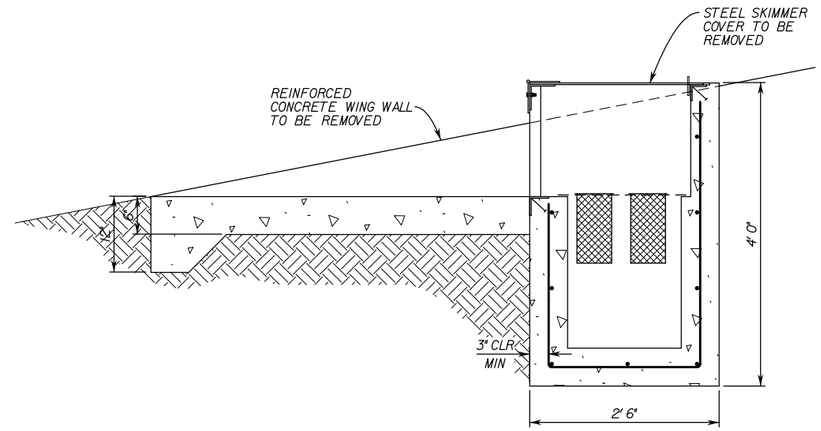

SKIMMER STRUCTURE - TRANSVERSE SECTION (B / --)

SCALE: 1" = 1'-0"

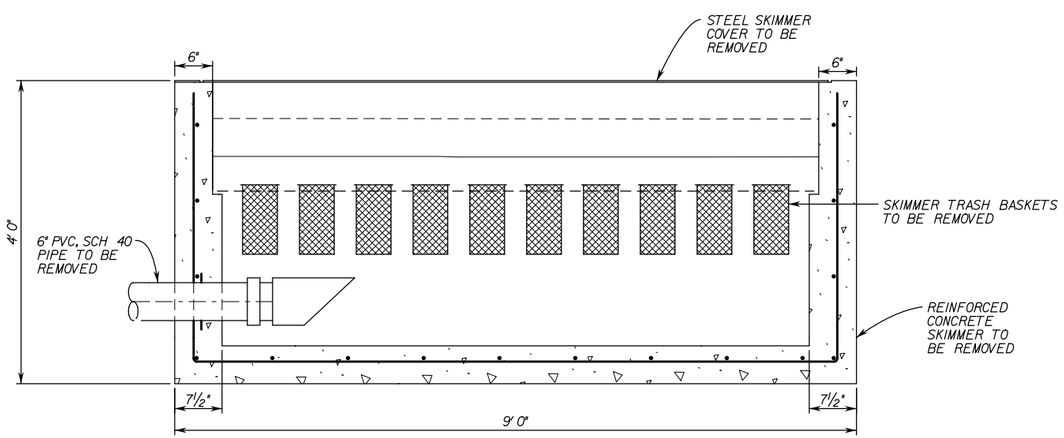

SKIMMER STRUCTURE SECTION (A / --)

SCALE: 1" = 1'-0"

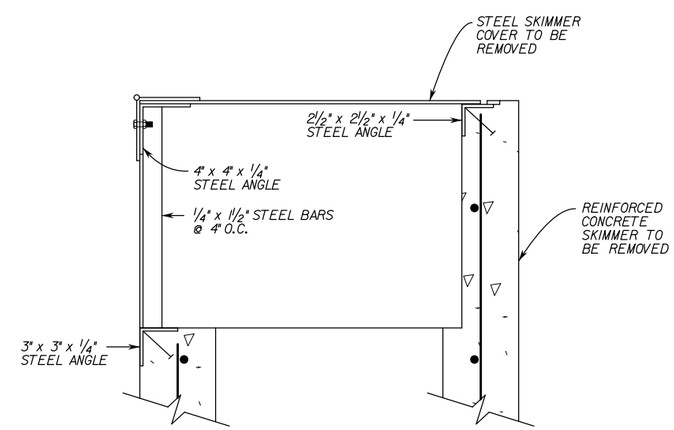

SKIMMER STRUCTURE COVER

SCALE: ½" = 1'-0"

COUNTY OF ORANGE CALIFORNIA

MARK	DESCRIPTION	DATE	APPR.

PREPARED UNDER THE RESPONSIBLE CHARGE OF:

REGISTERED PROFESSIONAL ENGINEER JOHN A. LOAGUE No. 50292 Exp. 6/30/09 CIVIL STATE OF CALIFORNIA

DATE

DESIGNED BY:

DRAWN BY: CADD

CHECKED BY: JOHN LOAGUE

DRAWING CODE: F06-101-7

FILE NAME: -

PLOT DATE: $DATE$

SCALE: AS SHOWN

OC PUBLIC WORKS

PREPARED BY: AKM CONSULTING ENGINEERS

HASTER RETARDING BASIN (C05802) PUMP STATION

LAKE SKIMMER STRUCTURE DEMOLITION PLAN

Sheet Reference Number

D–6

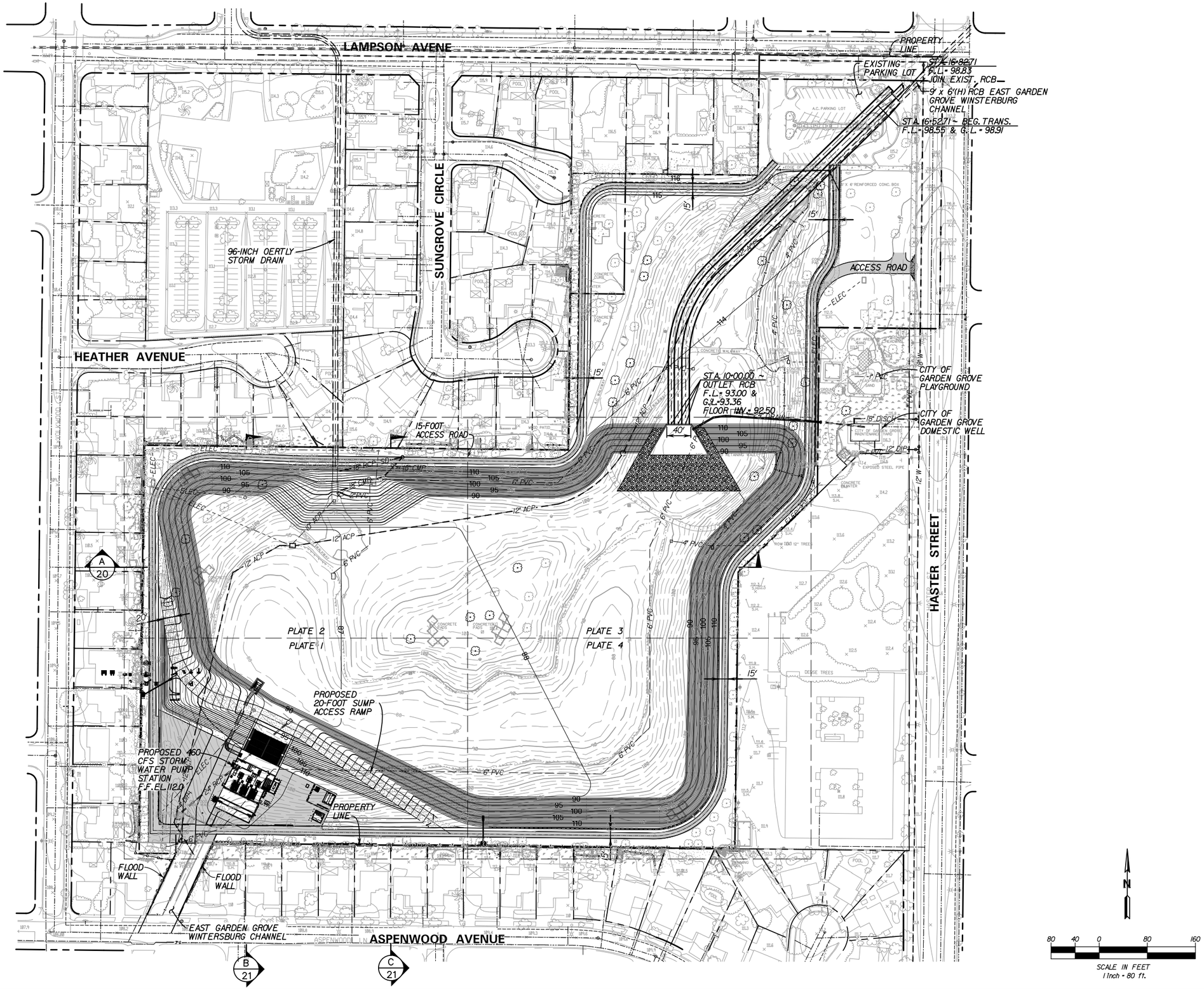

COUNTY OF ORANGE CALIFORNIA

MARK	DESCRIPTION	DATE	APPR.

PREPARED UNDER THE RESPONSIBLE CHARGE OF:

REGISTERED PROFESSIONAL ENGINEER JOHN A. LOAGUE No. 50092 Exp. 6/30/09 CIVIL STATE OF CALIFORNIA

DATE

DESIGNED BY:

DRAWN BY: CADD

CHECKED BY: JOHN LOAGUE

DRAWING CODE: F06-101-7

FILE NAME:

PLOT DATE: $DATE$

SCALE: AS SHOWN

OC PUBLIC WORKS

PREPARED BY: AKM CONSULTING ENGINEERS

HASTER RETARDING BASIN (C05B02) PUMP STATION

OVERALL GRADING SITE PLAN

Sheet Reference Number

C–1

MATCHLINE SEE SHEET 18

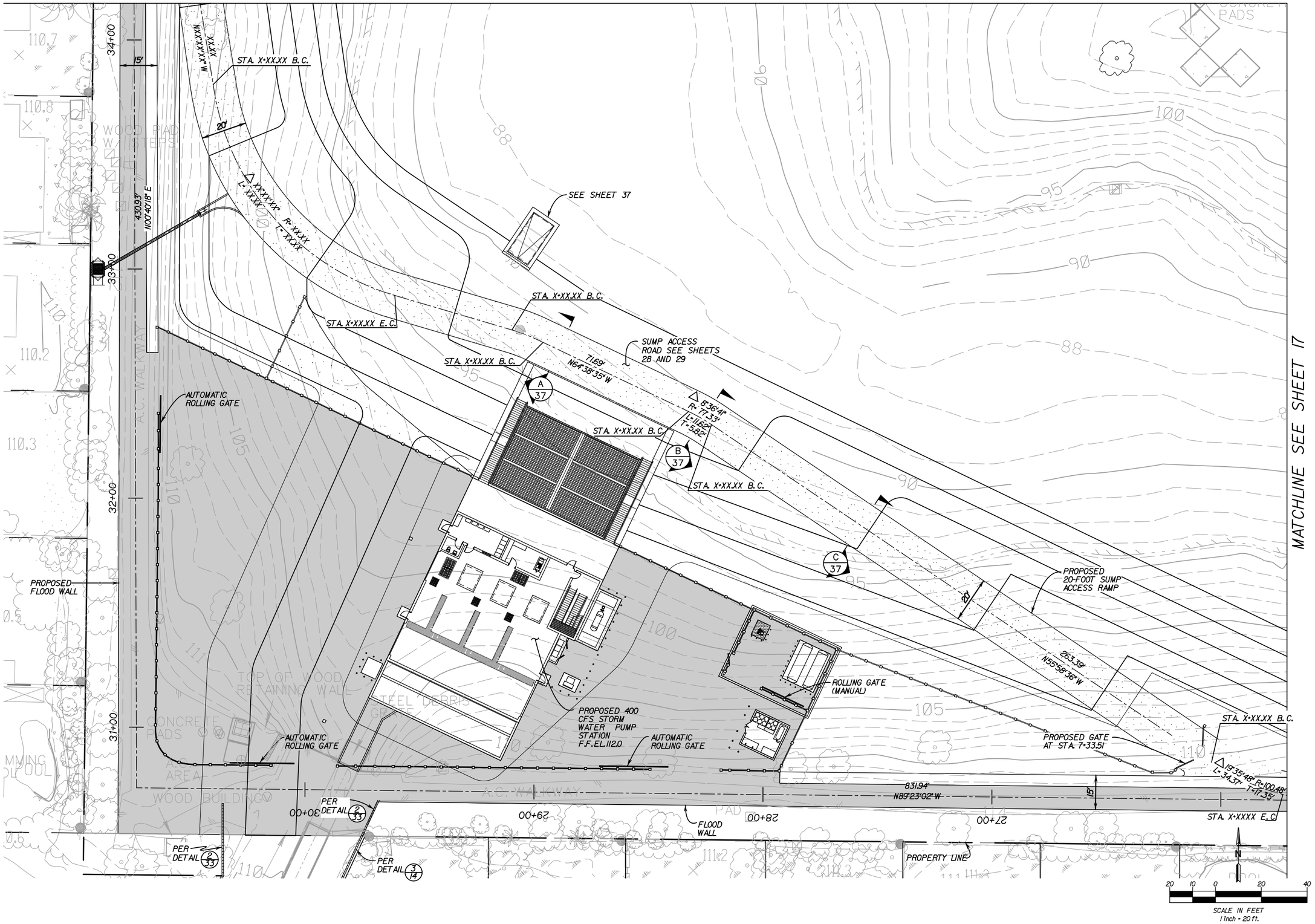

MATCHLINE SEE SHEET 17

COUNTY OF ORANGE CALIFORNIA

MARK	DESCRIPTION	DATE	APPR.

PREPARED UNDER THE RESPONSIBLE CHARGE OF:

REGISTERED PROFESSIONAL ENGINEER JOHN A. LOAGUE No. 50092 Exp. 6/30/09 CIVIL STATE OF CALIFORNIA

DATE

DESIGNED BY:

DRAWN BY: CADD

CHECKED BY: JOHN LOAGUE

DRAWING CODE: F06-101-7

FILE NAME: -

PLOT DATE: $DATE$

SCALE: AS SHOWN

OC PUBLIC WORKS

PREPARED BY: AKM CONSULTING ENGINEERS

HASTER RETARDING BASIN (C05802) PUMP STATION

GRADING PLAN I

Sheet Reference Number

C-2

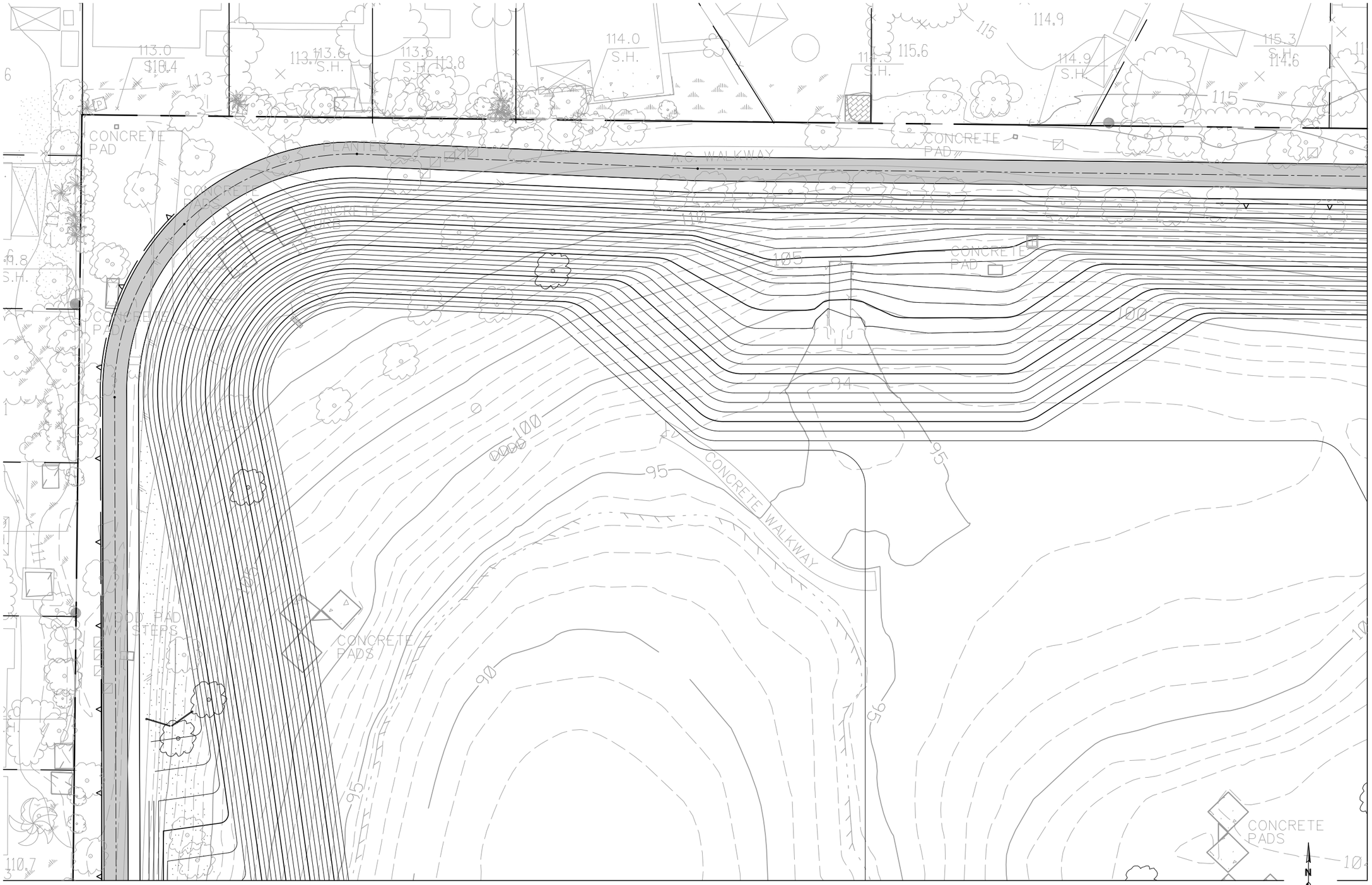

COUNTY OF ORANGE CALIFORNIA

MARK	DESCRIPTION	DATE	APPR.

PREPARED UNDER THE RESPONSIBLE CHARGE OF:

REGISTERED PROFESSIONAL ENGINEER JOHN A. LOAGUE No. 50092 Exp. 6/30/09 CIVIL STATE OF CALIFORNIA

DATE

DESIGNED BY:

DRAWN BY: CADD

CHECKED BY: JOHN LOAGUE

DRAWING CODE: F06-101-7

FILE NAME: -

PLOT DATE: $DATE$

SCALE: AS SHOWN

OC PUBLIC WORKS

PREPARED BY: AGI CONSULTING ENGINEERS

HASTER RETARDING BASIN (C05B02) PUMP STATION

GRADING PLAN II

Sheet Reference Number

C-3

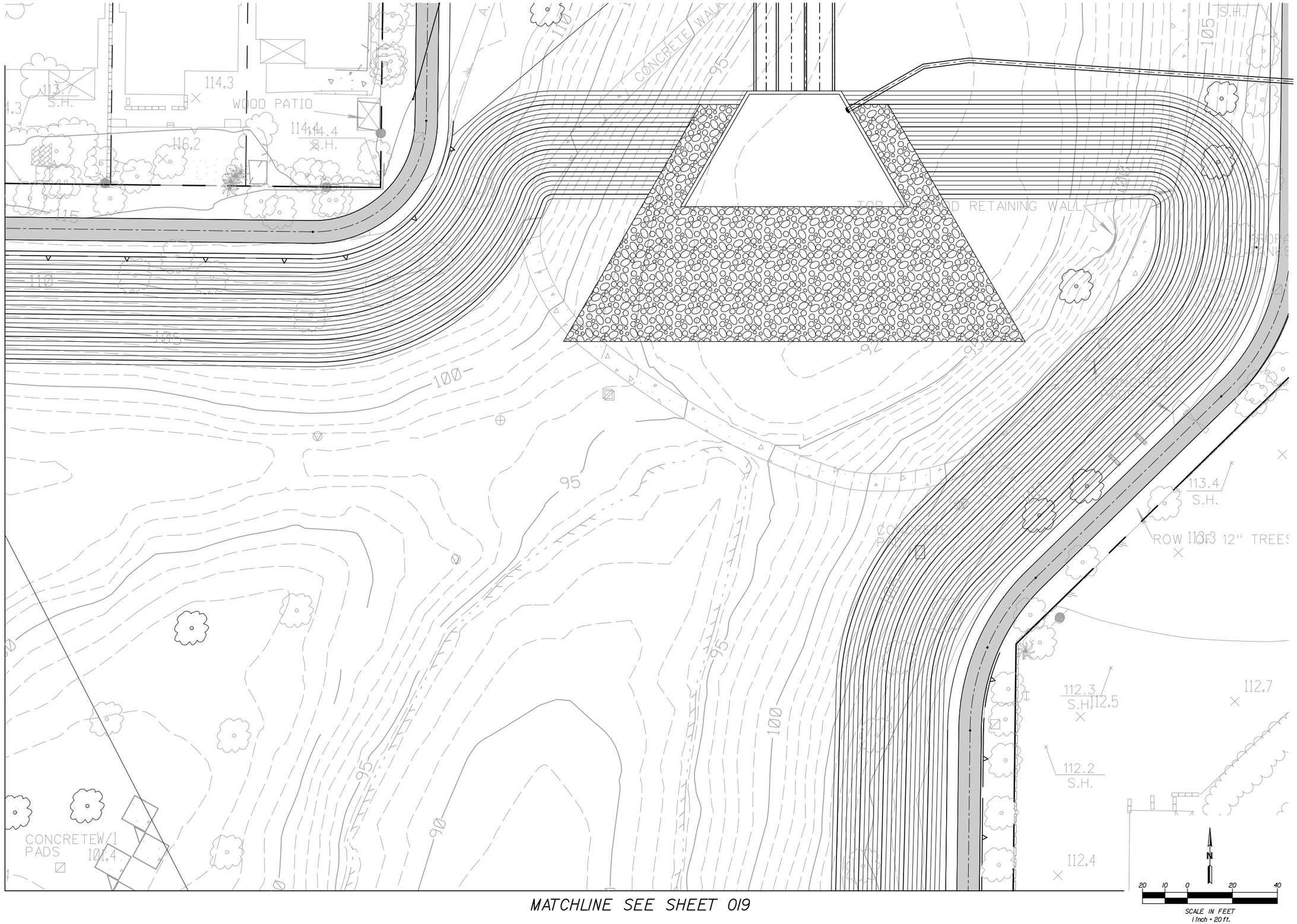

COUNTY OF ORANGE CALIFORNIA

MARK	DESCRIPTION	DATE	APPR.

PREPARED UNDER THE RESPONSIBLE CHARGE OF:

REGISTERED PROFESSIONAL ENGINEER JOHN A. LOAGUE No. 50092 Exp. 6/30/09 CIVIL STATE OF CALIFORNIA

DATE

DESIGNED BY:

DRAWN BY: CADD

CHECKED BY: JOHN LOAGUE

DRAWING CODE: F06-101-7

FILE NAME:

PLOT DATE: $DATE$

SCALE: AS SHOWN

OC PUBLIC WORKS

PREPARED BY: AKM CONSULTING ENGINEERS

HASTER RETARDING BASIN (C05802) PUMP STATION

GRADING PLAN III

Sheet Reference Number

C-4

Sheet 16 of 104

MATCHLINE SEE SHEET 018

MATCHLINE SEE SHEET 016

COUNTY OF ORANGE CALIFORNIA

MARK	DESCRIPTION	DATE	APPR.

PREPARED UNDER THE RESPONSIBLE CHARGE OF:

REGISTERED PROFESSIONAL ENGINEER JOHN A. LOAGUE No. 50292 Exp. 6/30/09 CIVIL STATE OF CALIFORNIA

DATE

DESIGNED BY:

DRAWN BY: CADD

CHECKED BY: JOHN LOAGUE

DRAWING CODE: F06-101-7

FILE NAME:

PLOT DATE: $DATE$

SCALE: AS SHOWN

OC PUBLIC WORKS

PREPARED BY: AKM CONSULTING ENGINEERS

HASTER RETARDING BASIN (CO5B02) PUMP STATION

GRADING PLAN IV

Sheet Reference Number

C-5

Sheet 17 of 104

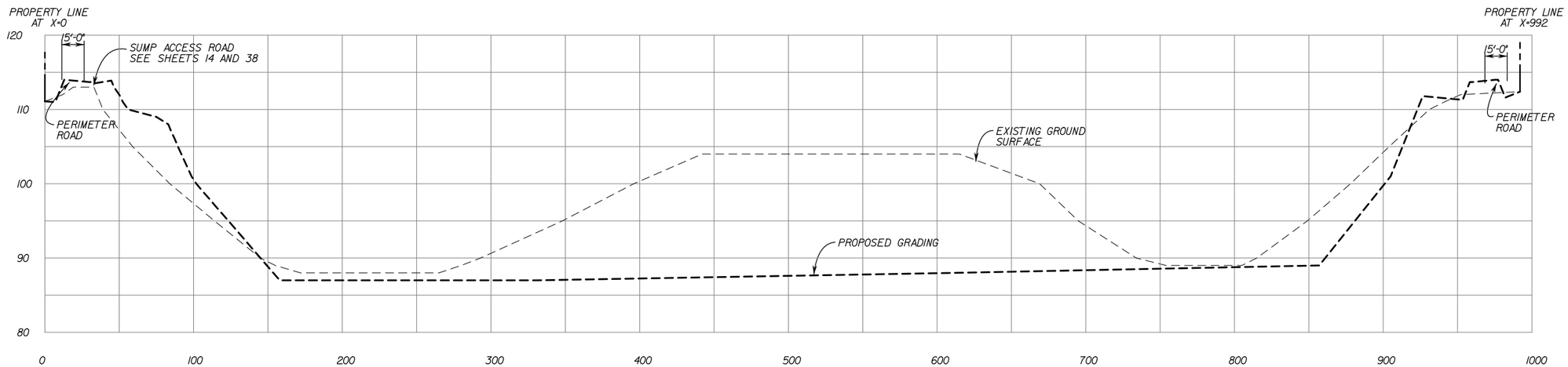

SECTION A
SCALE: HORIZ. 1" = 40'
VERT. 1" = 8'

COUNTY OF ORANGE CALIFORNIA

MARK	DESCRIPTION	DATE	APPR.

PREPARED UNDER THE RESPONSIBLE CHARGE OF:

REGISTERED PROFESSIONAL ENGINEER JOHN A. LOAGUE No. 50292 Exp. 6/30/09 CIVIL STATE OF CALIFORNIA

DATE

DESIGNED BY:

DRAWN BY: CADD

CHECKED BY: JOHN LOAGUE

DRAWING CODE: F06-101-7

FILE NAME: -

PLOT DATE: $DATE$

SCALE: AS SHOWN

OC PUBLIC WORKS

PREPARED BY: AKM CONSULTING ENGINEERS

HASTER RETARDING BASIN (C05B02) PUMP STATION

BASIN CROSSECTION I

Sheet Reference Number

C-6

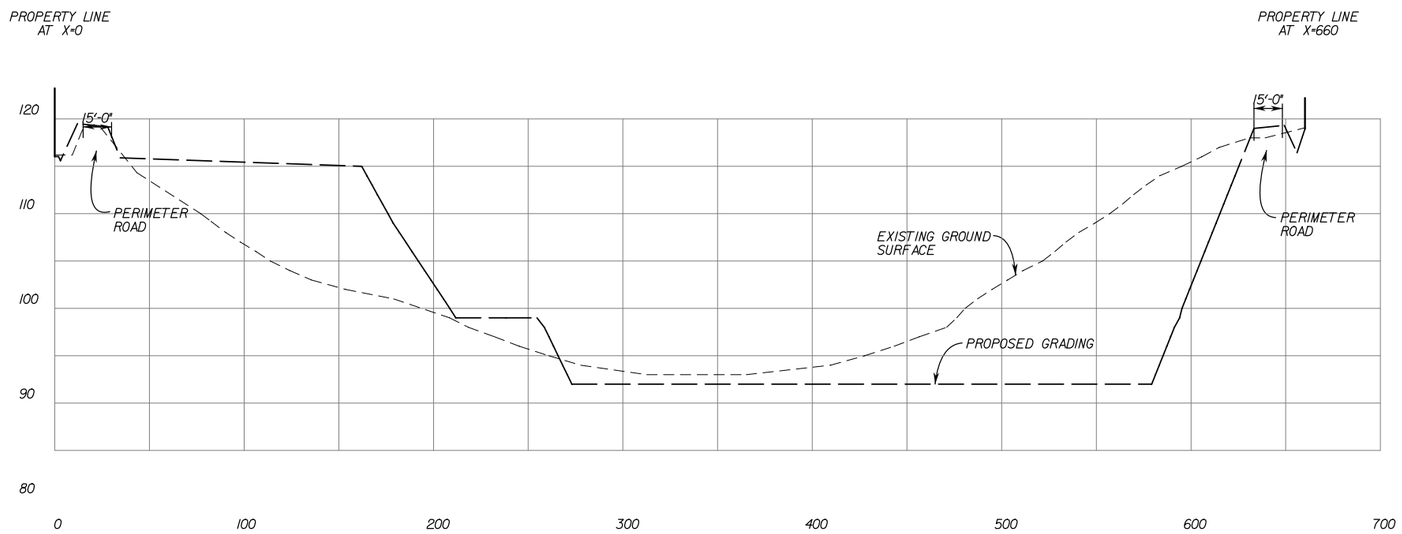

SECTION B
SCALE: HORIZ. 1" = 40'
VERT. 1" = 8'

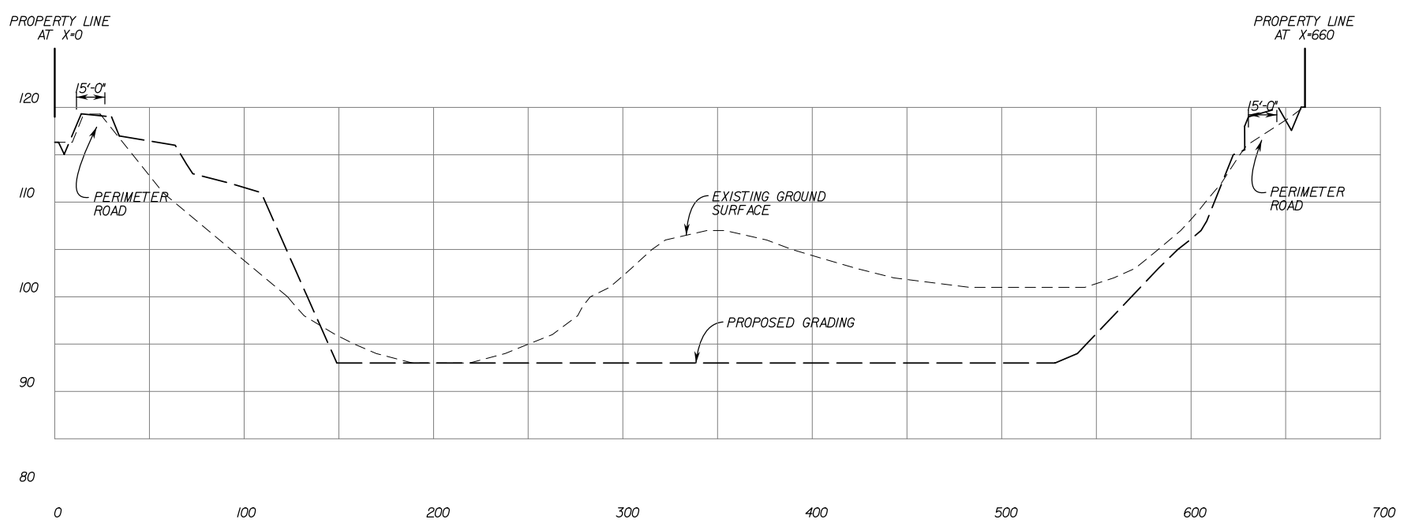

SECTION C
SCALE: HORIZ. 1" = 40'
VERT. 1" = 8'

COUNTY OF ORANGE CALIFORNIA

MARK	DESCRIPTION	DATE	APPR.

PREPARED UNDER THE RESPONSIBLE CHARGE OF:

REGISTERED PROFESSIONAL ENGINEER JOHN A. LOAGUE No. 50292 Exp. 6/30/09 CIVIL STATE OF CALIFORNIA

DATE

DESIGNED BY:

DRAWN BY: CADD

CHECKED BY: JOHN LOAGUE

DRAWING CODE: F06-101-7

FILE NAME: -

PLOT DATE: $DATE$

SCALE: AS SHOWN

OC PUBLIC WORKS

PREPARED BY: AKM CONSULTING ENGINEERS

HASTER RETARDING BASIN (C05802) PUMP STATION

BASIN CROSSECTION II

Sheet Reference Number

C-7

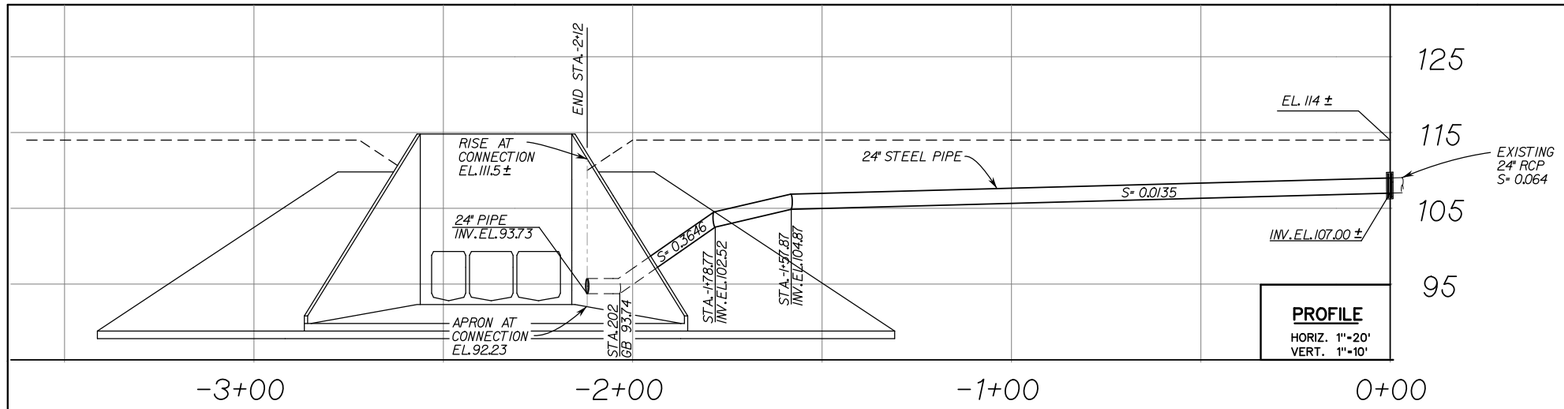

PROFILE

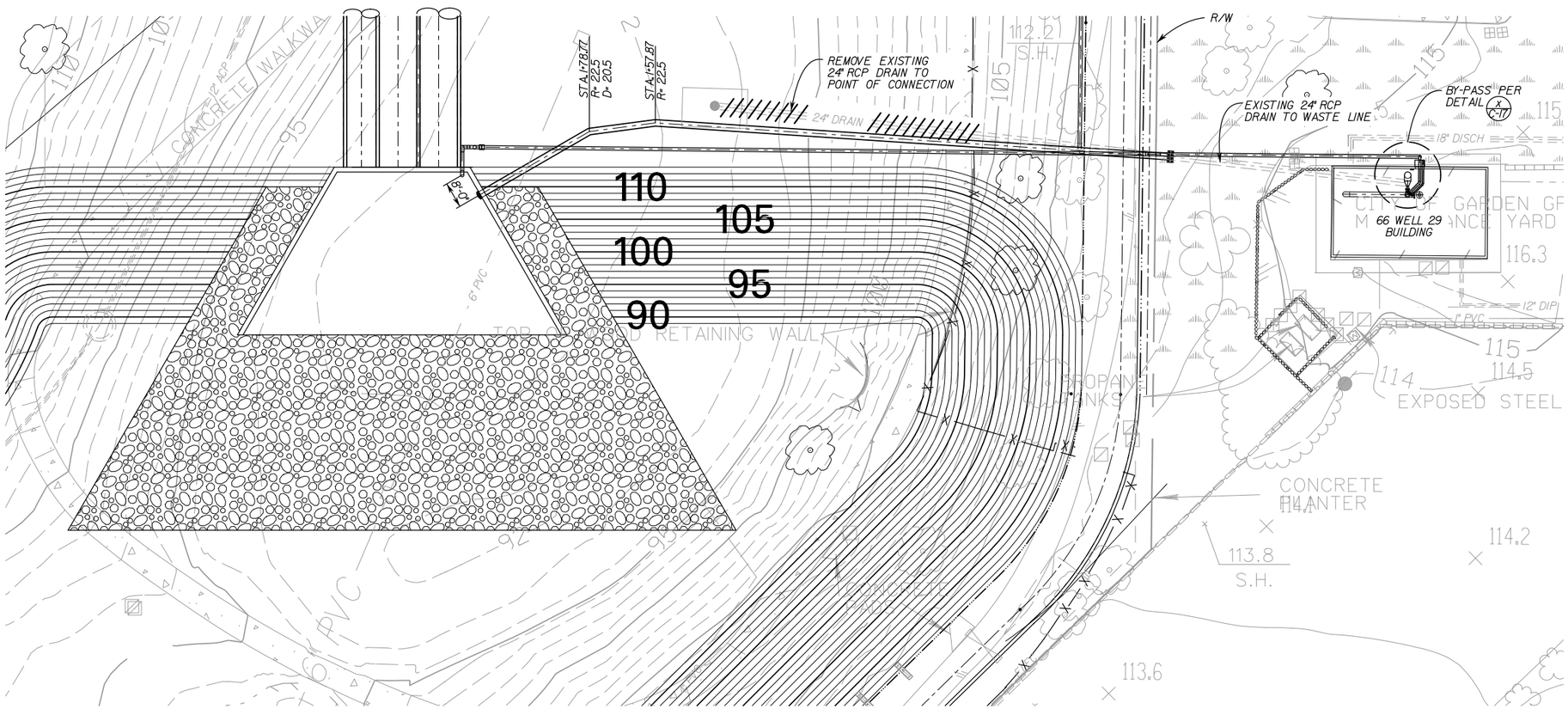

PLAN

COUNTY OF ORANGE CALIFORNIA

MARK	DESCRIPTION	DATE	APPR.

PREPARED UNDER THE RESPONSIBLE CHARGE OF:

REGISTERED PROFESSIONAL ENGINEER JOHN A. LOAGUE No. 50092 Exp. 6/30/09 CIVIL STATE OF CALIFORNIA

DATE

DESIGNED BY: REN WEITING
DRAWN BY: CADD
CHECKED BY: JOHN LOAGUE
DRAWING CODE: F06-101-7
FILE NAME: -
PLOT DATE: $DATE$
SCALE: AS SHOWN

OC PUBLIC WORKS

PREPARED BY: AKM CONSULTING ENGINEERS

HASTER RETARDING BASIN (C05802) PUMP STATION

CITY OF GARDEN GROVE WELL PUMP TO WASTE LINE

Sheet Reference Number

C–8

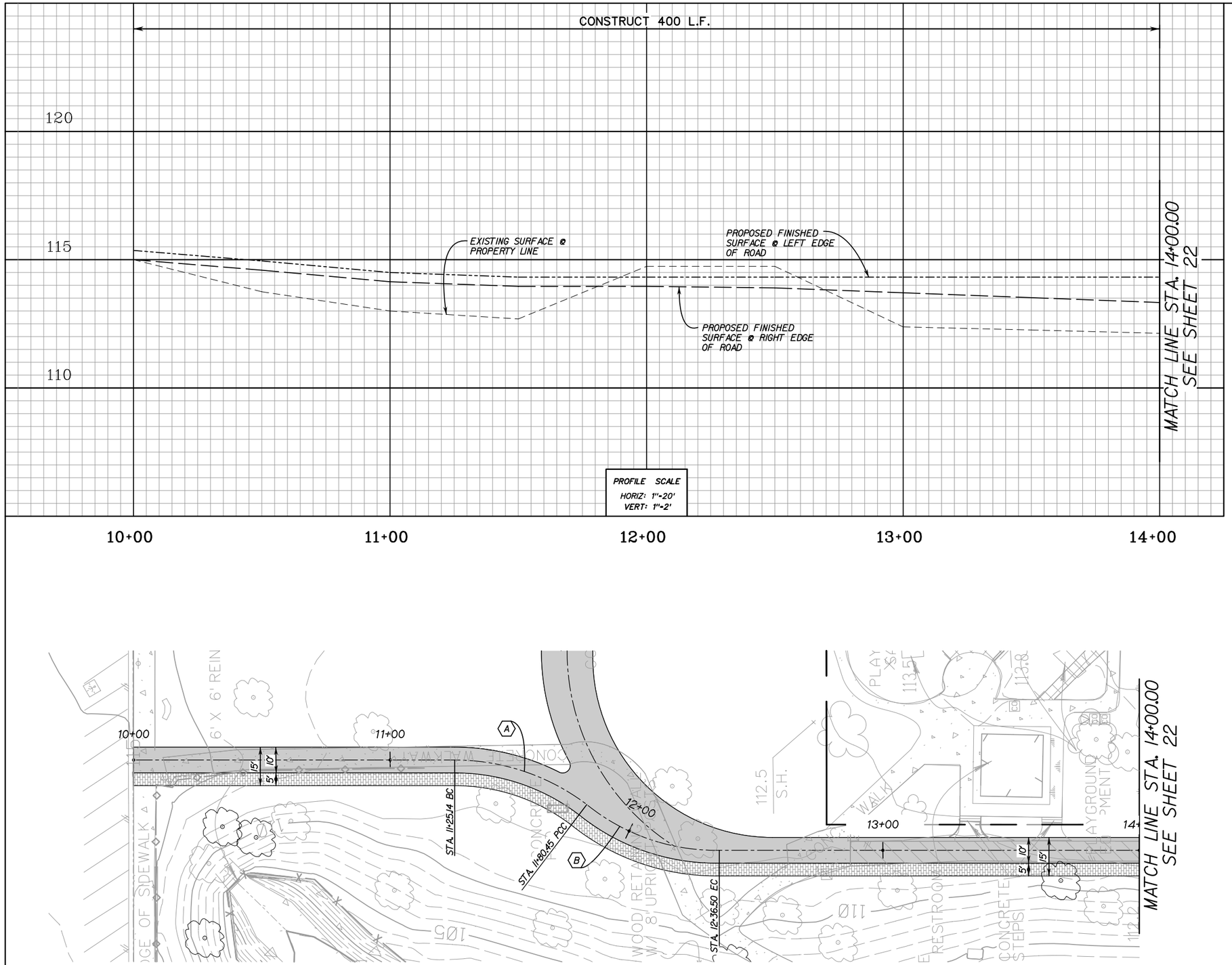

CURVE DATA				
	△	R	L	T
A	37°11'48"	85.26'	55.35'	28.69'
B	38°59'59"	80.00'	54.45'	29.47'

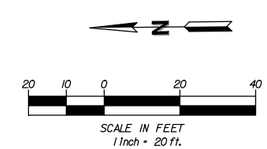

COUNTY OF ORANGE CALIFORNIA

MARK	DESCRIPTION	DATE	APPR.

PREPARED UNDER THE RESPONSIBLE CHARGE OF:

REGISTERED PROFESSIONAL ENGINEER FLOYD B. WOLAROFF No. 060987 Exp. 06/30/09 CIVIL STATE OF CALIFORNIA

DATE

DESIGNED BY: BLOOMENTER
DRAWN BY: CADD
CHECKED BY: JOHN LOAGUE
DRAWING CODE: F06-101-7
FILE NAME: -
PLOT DATE: $DATE$
SCALE: AS SHOWN

OC PUBLIC WORKS

PREPARED BY: AKM CONSULTING ENGINEERS

HASTER RETARDING BASIN (C05802)
PUMP STATION

ROAD PROFILE
FROM STA. 10+00.00
TO STA. 14+00.00

Sheet Reference Number

C–9

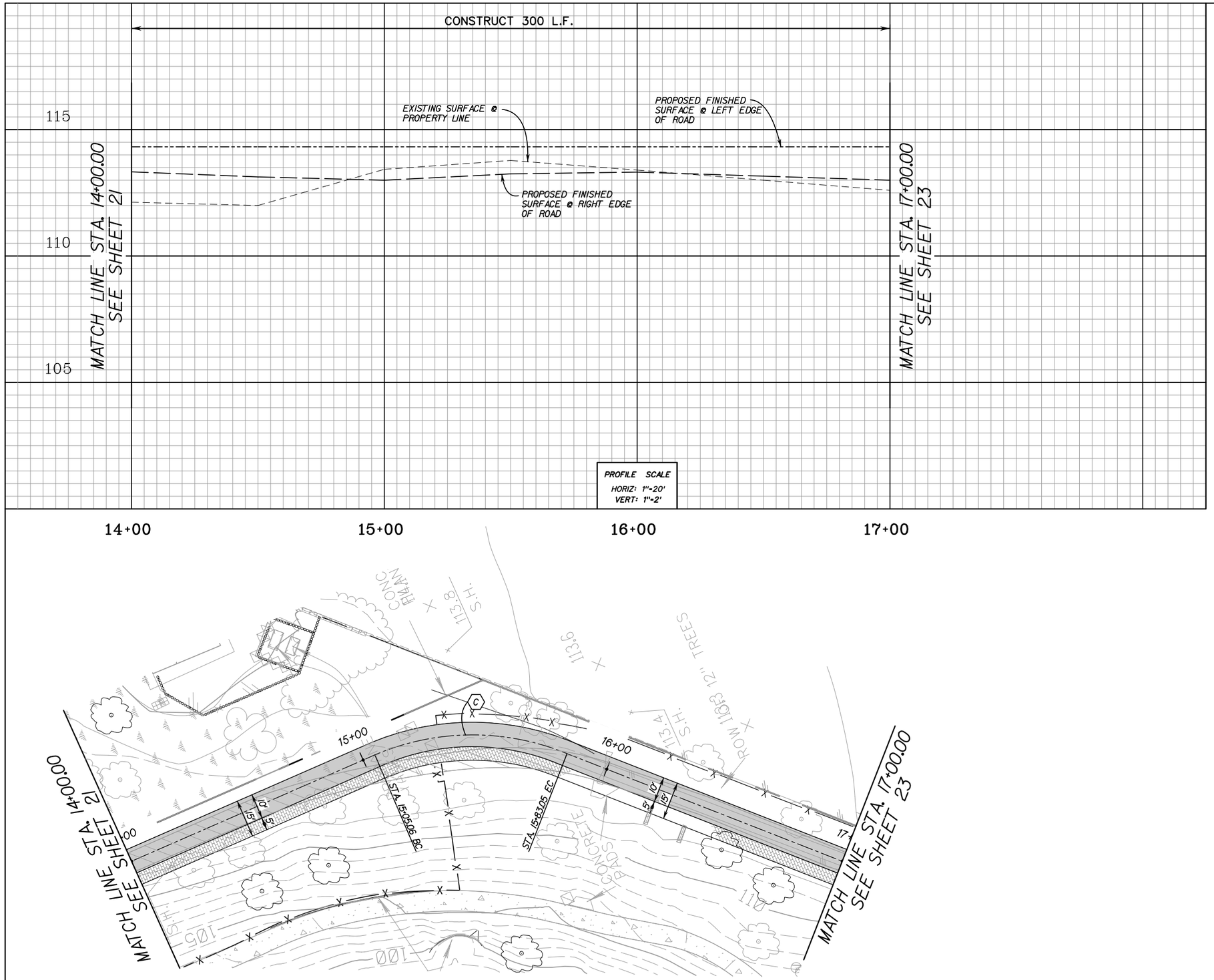

CURVE DATA				
	△	R	L	T
C	45°30'09"	98.26'	78.03'	41.21'

20 10 0 20 40

SCALE IN FEET
1 Inch = 20 ft.

COUNTY OF ORANGE CALIFORNIA

MARK	DESCRIPTION	DATE	APPR.

PREPARED UNDER THE RESPONSIBLE CHARGE OF:

REGISTERED PROFESSIONAL ENGINEER FLORIN B. MOJARADO No. 062887 Exp. 06/30/09 CIVIL STATE OF CALIFORNIA

DATE

DESIGNED BY: BLUEBERVUTER
DRAWN BY: CADD
CHECKED BY: JOHN LOAGUE
DRAWING CODE: F06-101-7
FILE NAME: -
PLOT DATE: $DATE$
SCALE: AS SHOWN

OC PUBLIC WORKS

PREPARED BY: AKM CONSULTING ENGINEERS

HASTER RETARDING BASIN (C05802)
PUMP STATION

ROAD PROFILE
FROM STA. 14+00.00
TO STA. 17+00.00

Sheet Reference Number

C–10

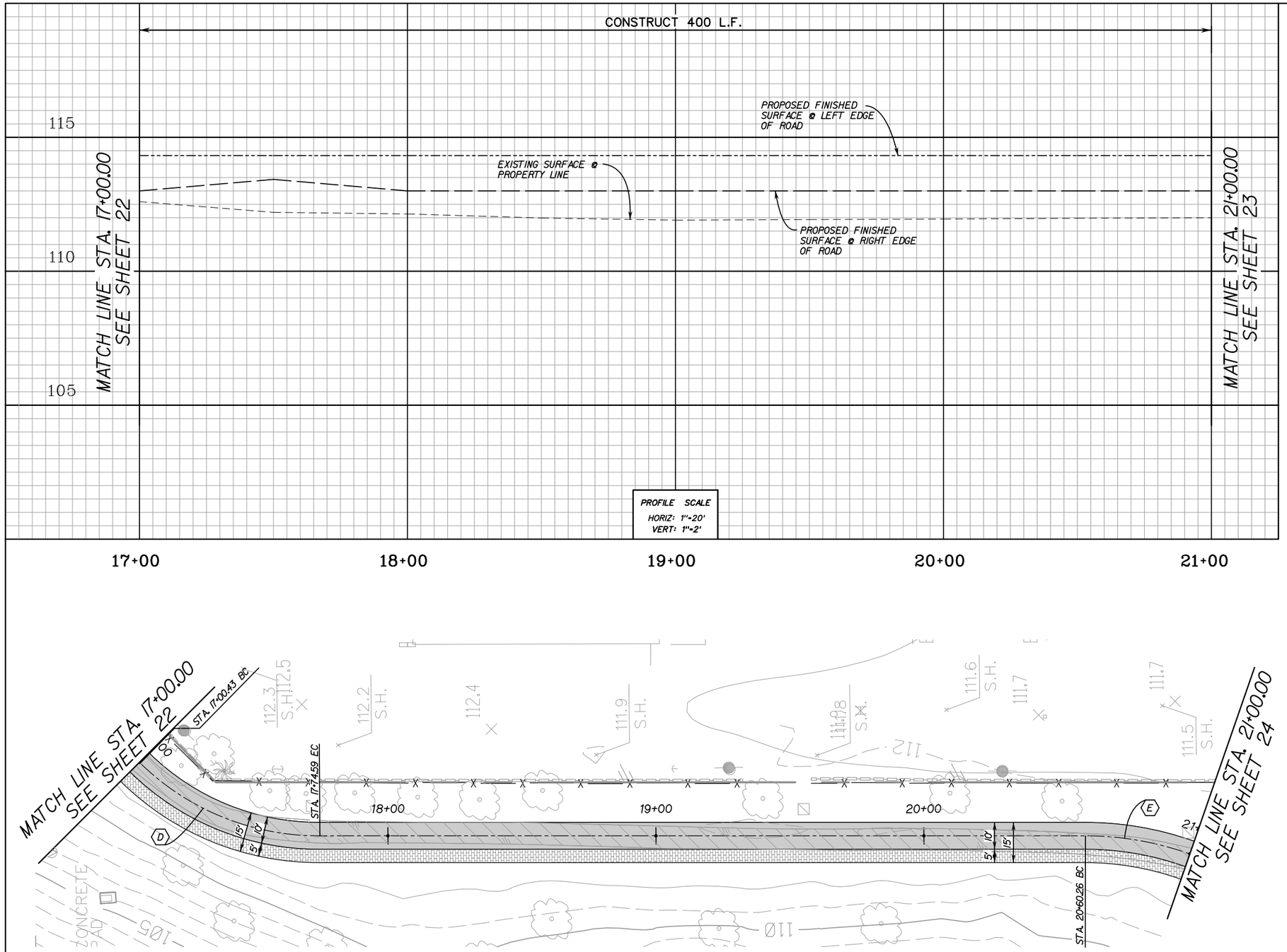

CURVE DATA				
	△	R	L	T
D	45°18'03"	94.95'	74.16'	39.62'
E	89°52'28"	116.01'	181.83'	115.61'

N

20 10 0 20 40

SCALE IN FEET
1 Inch = 20 ft.

COUNTY OF ORANGE CALIFORNIA

MARK	DESCRIPTION	DATE	APPR.

PREPARED UNDER THE RESPONSIBLE CHARGE OF:

REGISTERED PROFESSIONAL ENGINEER FUNWAI B. WU-MORRIS No. 062887 Exp. 6/30/09 CIVIL STATE OF CALIFORNIA

DATE

DESIGNED BY: BLAGRAVE/LITER
DRAWN BY: CADD
CHECKED BY: JOHN LOAGUE
DRAWING CODE: F06-101-7
FILE NAME: -
PLOT DATE: DATE
SCALE: AS SHOWN

OC PUBLIC WORKS

PREPARED BY: AKM CONSULTING ENGINEERS

HASTER RETARDING BASIN (C05802)
PUMP STATION

ROAD PROFILE
FROM STA. 17+00.00
TO STA. 21+00.00

Sheet Reference Number

C–11

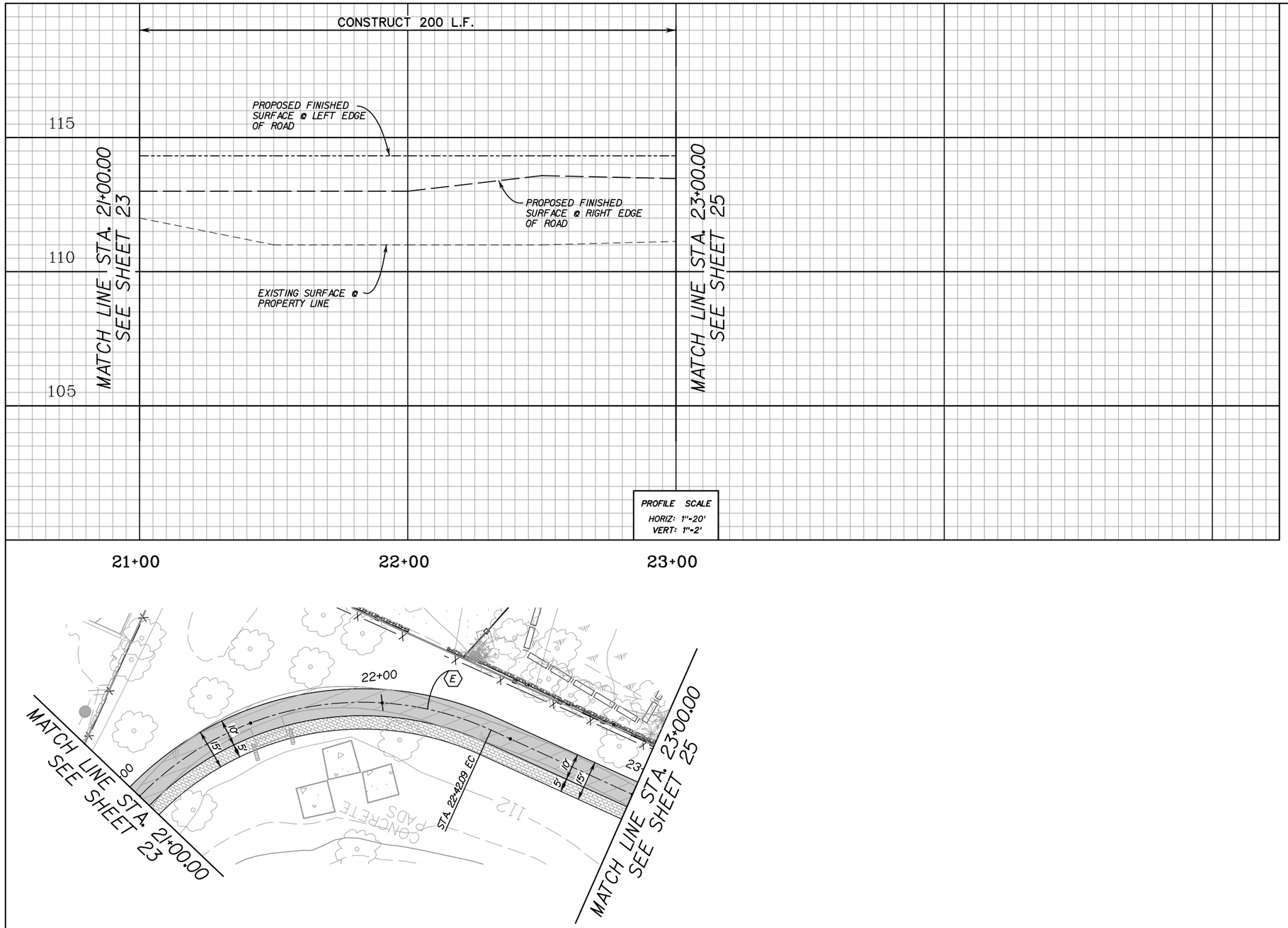

CURVE DATA				
	△	R	L	T
E	89°52'28"	116.01'	181.83'	115.61'

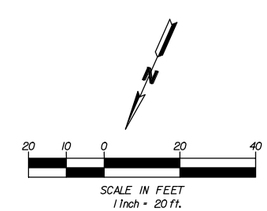

COUNTY OF ORANGE CALIFORNIA

MARK	DESCRIPTION	DATE	APPR.

PREPARED UNDER THE RESPONSIBLE CHARGE OF:

REGISTERED PROFESSIONAL ENGINEER FLORIAN B. WOJNAROWICZ No. 060987 Exp. 06/30/09 CIVIL STATE OF CALIFORNIA

DATE

DESIGNED BY: BLOOMENEITER
DRAWN BY: CADD
CHECKED BY: JOHN LOAGUE
DRAWING CODE: F06-101-7
FILE NAME: -
PLOT DATE: DATE
SCALE: AS SHOWN

OC PUBLIC WORKS

PREPARED BY: AKM CONSULTING ENGINEERS

HASTER RETARDING BASIN (C05802) PUMP STATION

ROAD PROFILE FROM STA. 21+00.00 TO STA. 23+00.00

Sheet Reference Number

C-12

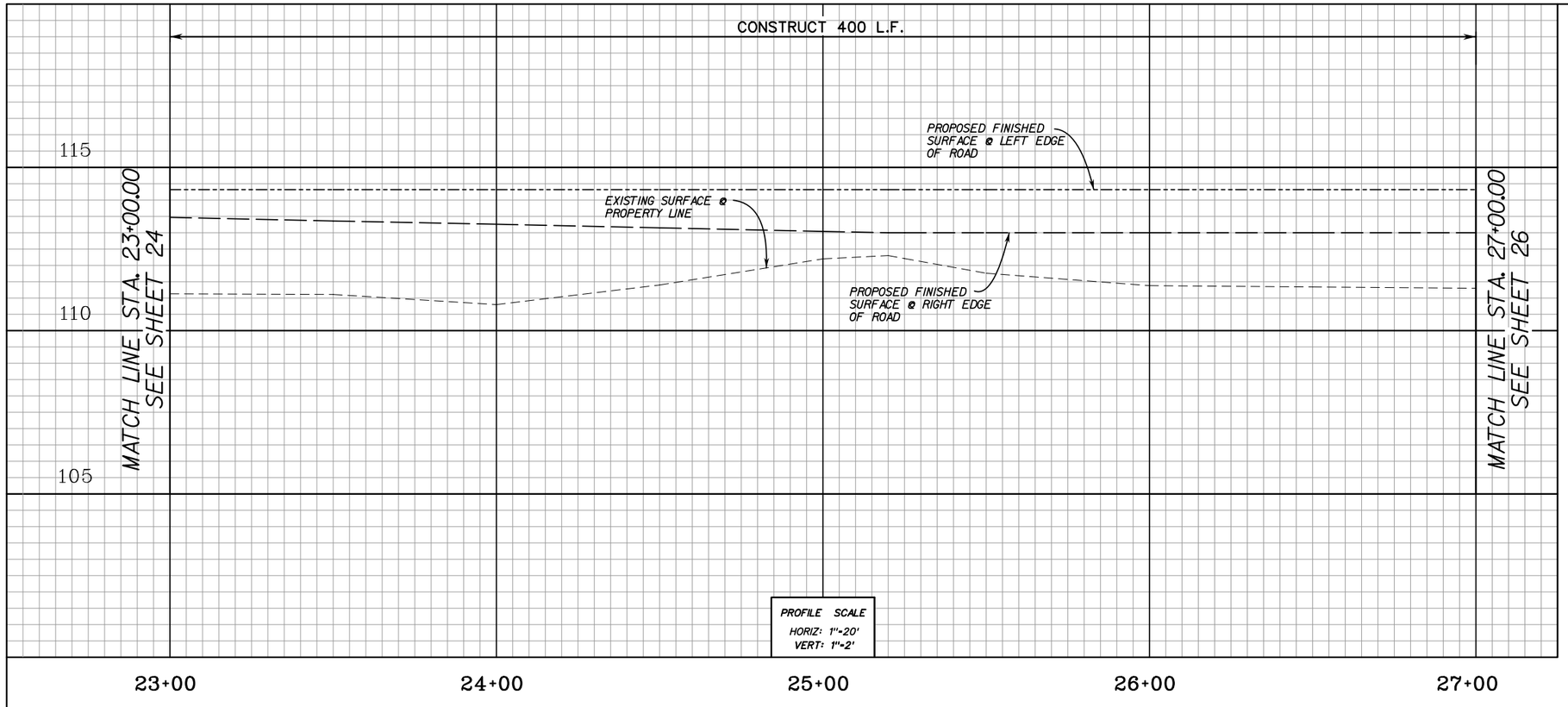

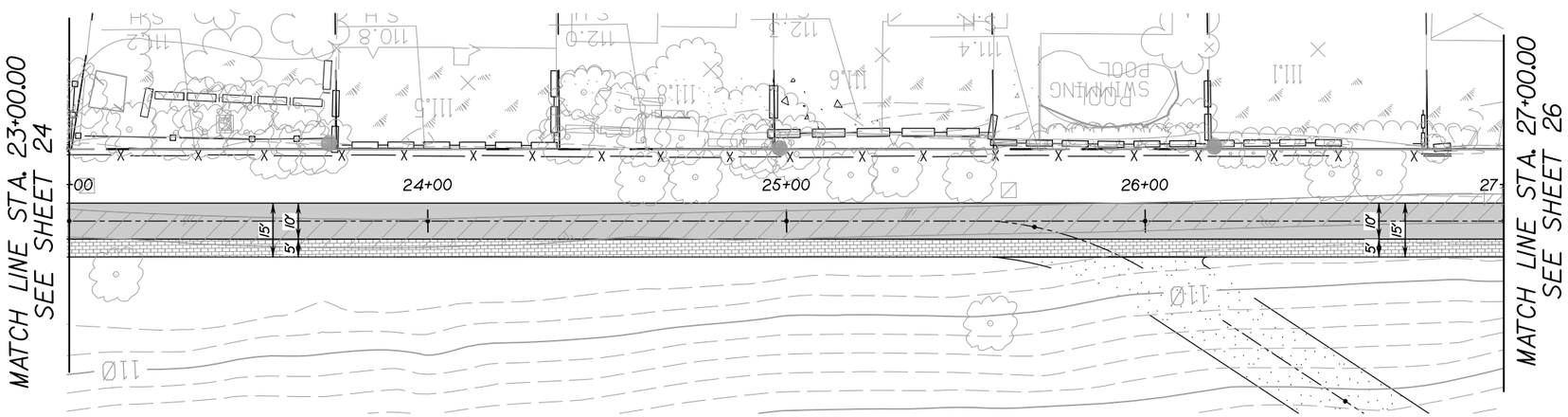

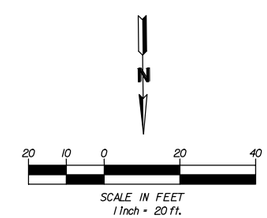

COUNTY OF ORANGE CALIFORNIA

MARK	DESCRIPTION	DATE	APPR.

PREPARED UNDER THE RESPONSIBLE CHARGE OF:

REGISTERED PROFESSIONAL ENGINEER FLORIAN B. WOJNAROWICZ No. 060987 Exp. 06/30/09 CIVIL STATE OF CALIFORNIA

DATE

DESIGNED BY: BLAGRAVE/BITER

DRAWN BY: CADD

CHECKED BY: JOHN LOAGUE

DRAWING CODE: F06-101-7

FILE NAME: -

PLOT DATE: $DATE$

SCALE: AS SHOWN

OC PUBLIC WORKS

PREPARED BY: AKM CONSULTING ENGINEERS

HASTER RETARDING BASIN (C05802)
PUMP STATION

ROAD PROFILE
FROM STA. 23+00.00
TO STA. 27+00.00

Sheet Reference Number

C–13

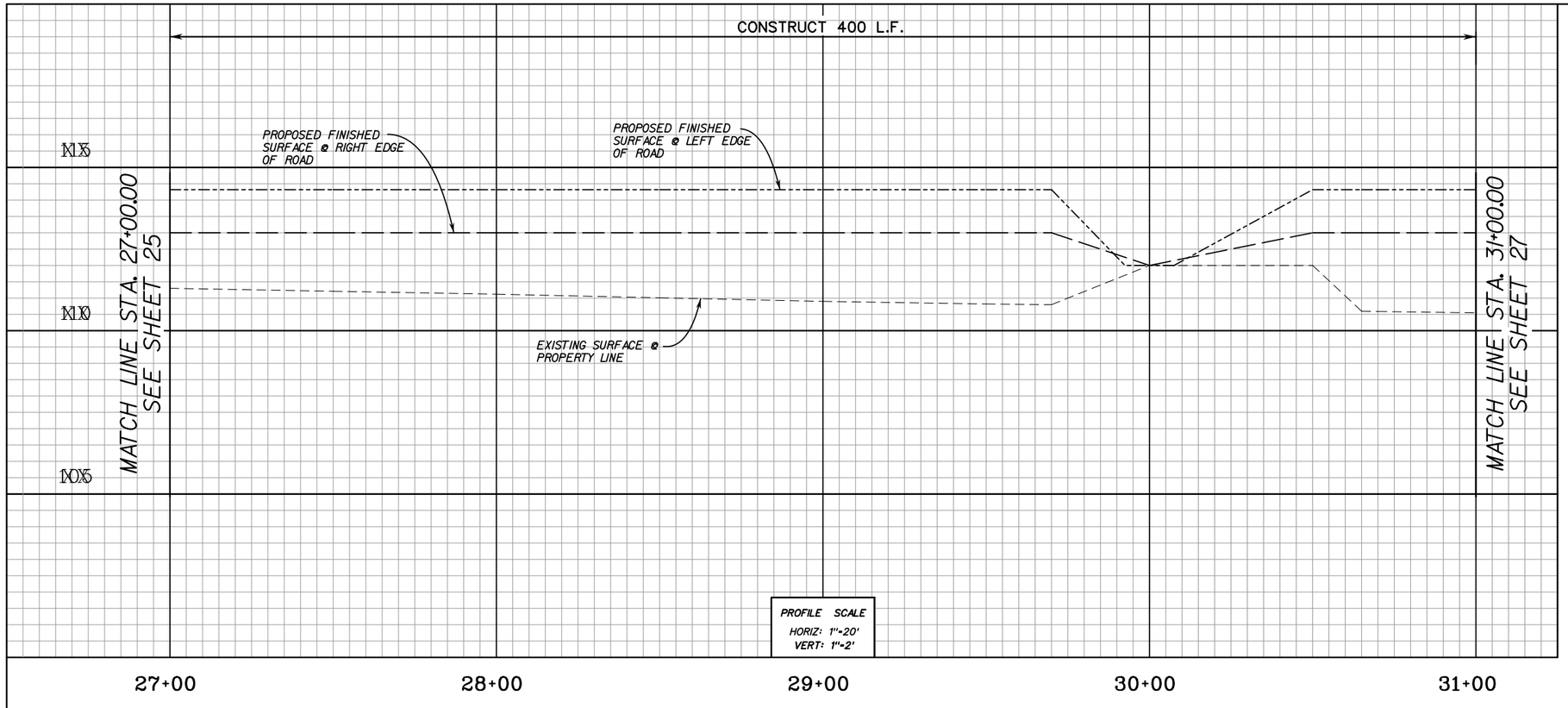

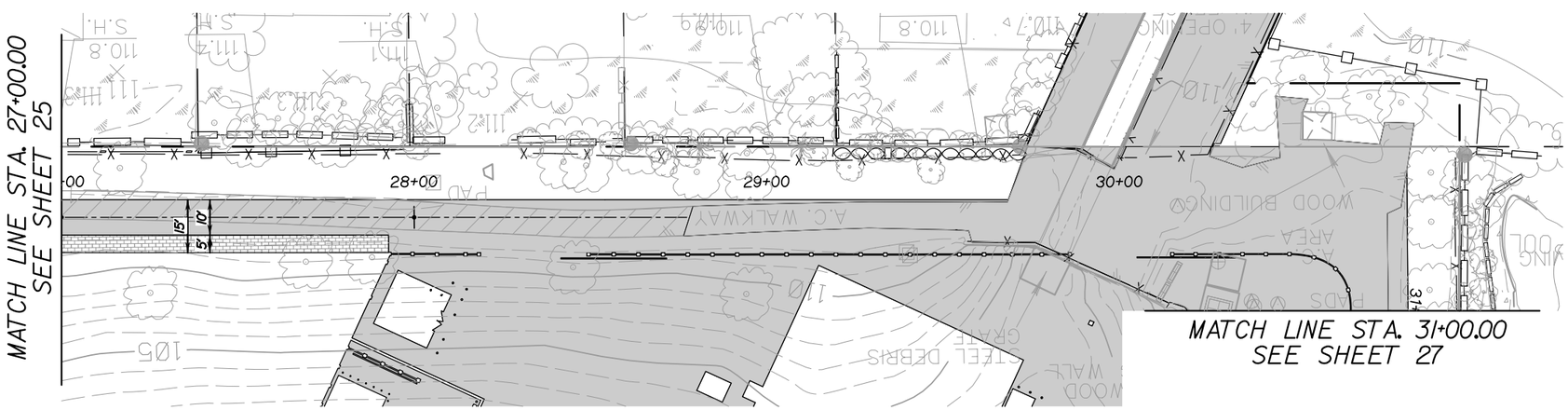

N

20 10 0 20 40

SCALE IN FEET
1 Inch = 20 ft.

COUNTY OF ORANGE CALIFORNIA

MARK	DESCRIPTION	DATE	APPR.

PREPARED UNDER THE RESPONSIBLE CHARGE OF:

REGISTERED PROFESSIONAL ENGINEER FLORIAN B. WOJNAROWICZ No. 060987 Exp. 06/30/09 CIVIL STATE OF CALIFORNIA

DATE

DESIGNED BY: BLAGRAVE/BUTTER
DRAWN BY: CADD
CHECKED BY: JOHN LOAGUE
DRAWING CODE: F06-101-7
FILE NAME: -
PLOT DATE: DATE
SCALE: AS SHOWN

OC PUBLIC WORKS

PREPARED BY: AKM CONSULTING ENGINEERS

HASTER RETARDING BASIN (C05802) PUMP STATION

ROAD PROFILE
FROM STA. 27+00.00
TO STA. 31+00.00

Sheet Reference Number

C–14

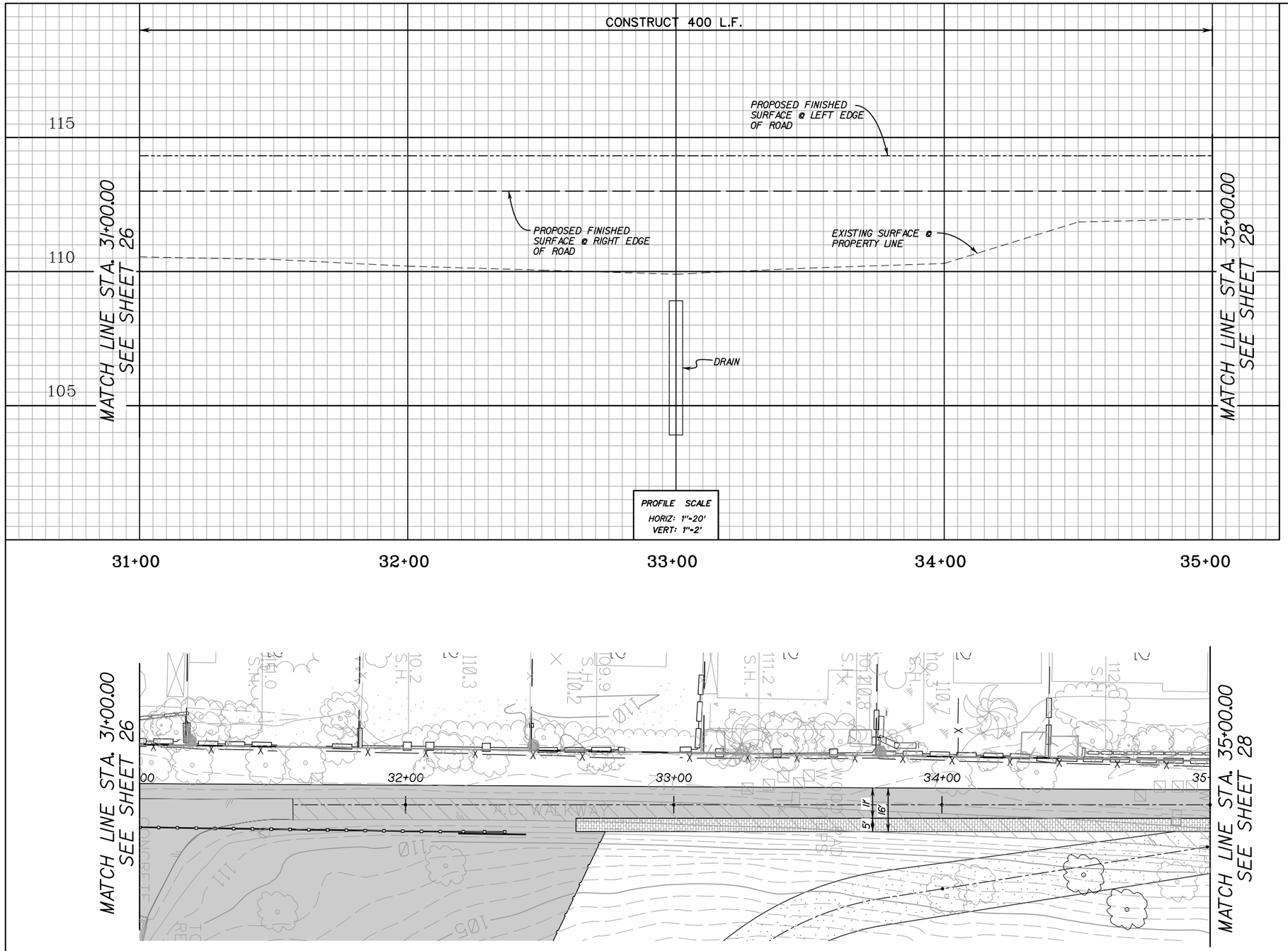

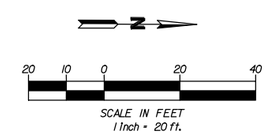

COUNTY OF ORANGE CALIFORNIA

MARK	DESCRIPTION	DATE	APPR.

PREPARED UNDER THE RESPONSIBLE CHARGE OF:

REGISTERED PROFESSIONAL ENGINEER FLOYD B. WOLANSKI No. 60997 Exp. 6/30/09 CIVIL STATE OF CALIFORNIA

DATE

DESIGNED BY: BLAKE WEITER
DRAWN BY: CADD
CHECKED BY: JOHN LOAGUE
DRAWING CODE: F06-101-7
FILE NAME: -
PLOT DATE: DATE
SCALE: AS SHOWN

OC PUBLIC WORKS

PREPARED BY: AKM CONSULTING ENGINEERS

HASTER RETARDING BASIN (C05802)
PUMP STATION

ROAD PROFILE
FROM STA. 31+00.00
TO STA. 35+00.00

Sheet Reference Number

C–15

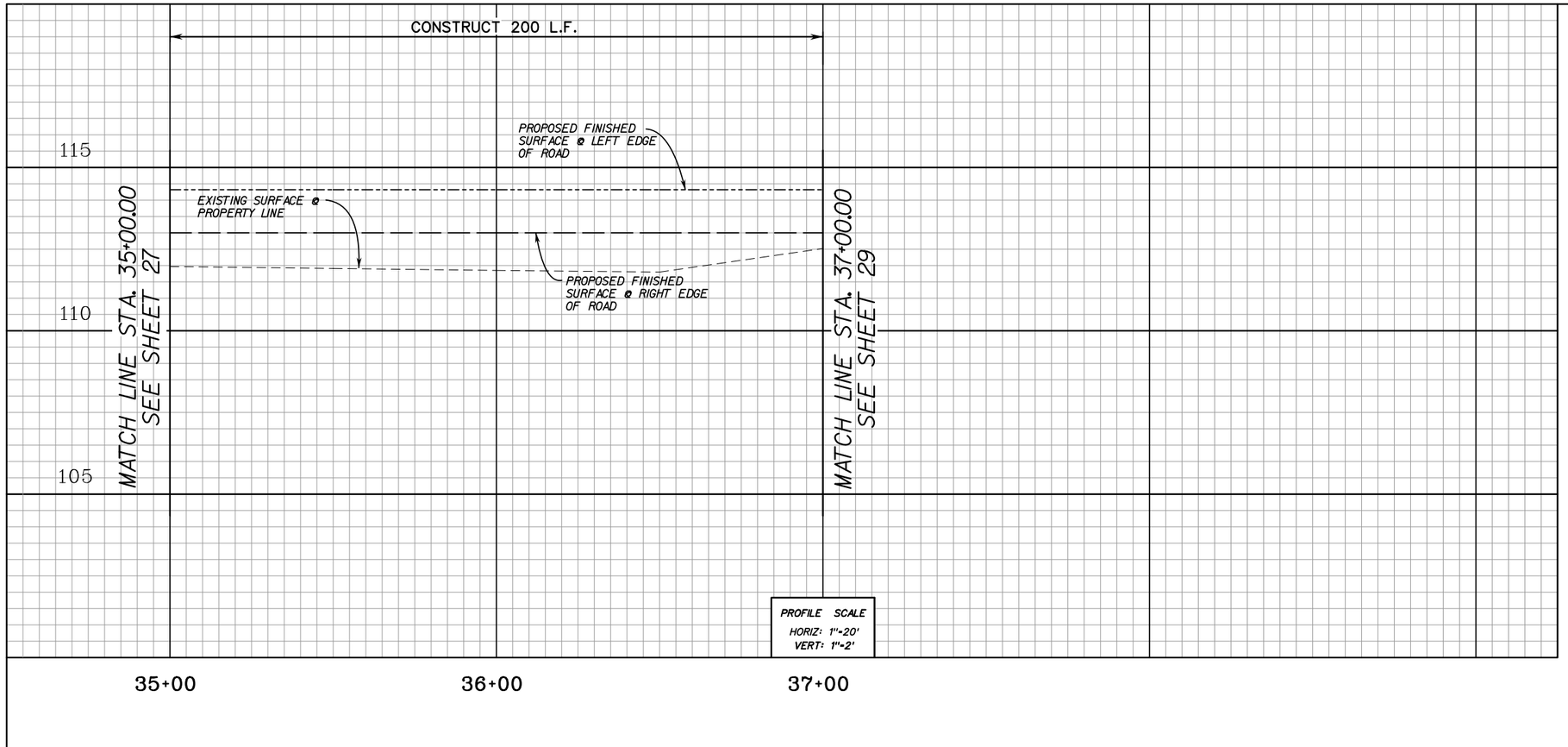

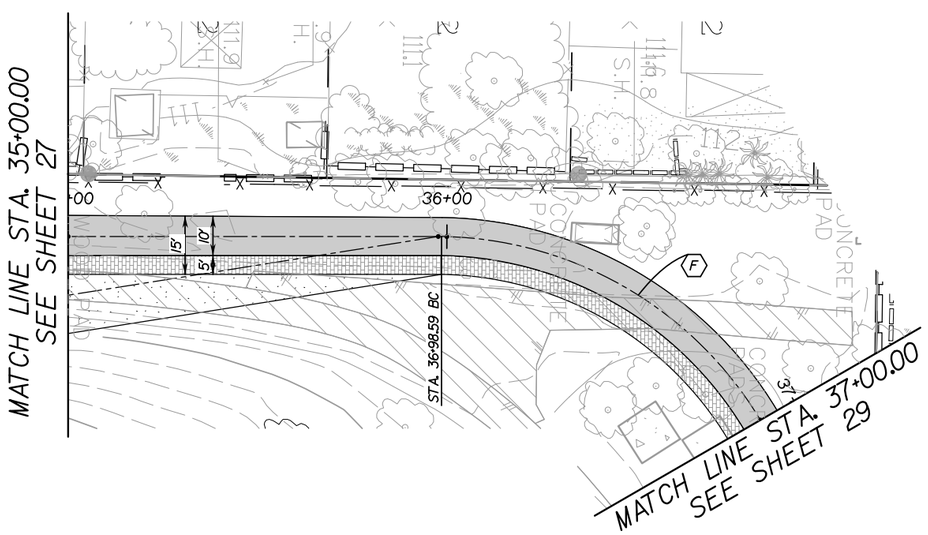

CURVE DATA				
	△	R	L	T
F	89°56'10"	100.08'	157.09'	99.97'

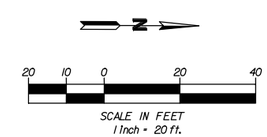

COUNTY OF ORANGE CALIFORNIA

MARK	DESCRIPTION	DATE	APPR.

PREPARED UNDER THE RESPONSIBLE CHARGE OF:

REGISTERED PROFESSIONAL ENGINEER FLORIAN B. WOJNAROWICZ No. 060987 Exp. 06/30/09 CIVIL STATE OF CALIFORNIA

DATE

DESIGNED BY: BLAIR WEITER
DRAWN BY: CADD
CHECKED BY: JOHN LOAGUE
DRAWING CODE: F06-101-7
FILE NAME: -
PLOT DATE: DATE
SCALE: AS SHOWN

OC PUBLIC WORKS

PREPARED BY: AKM CONSULTING ENGINEERS

HASTER RETARDING BASIN (C05802) PUMP STATION

ROAD PROFILE FROM STA. 350.00 TO STA. 370.00

Sheet Reference Number

C–16

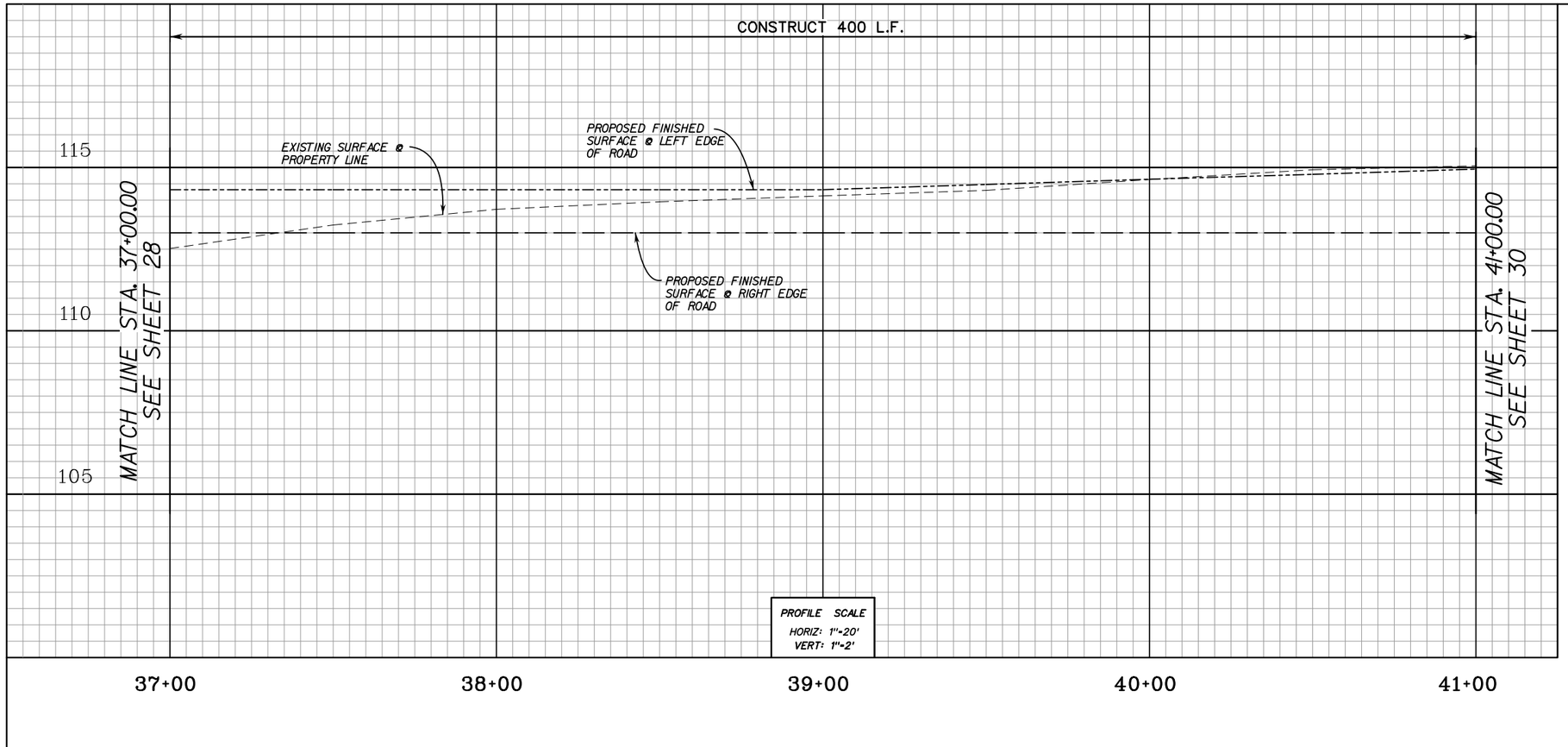

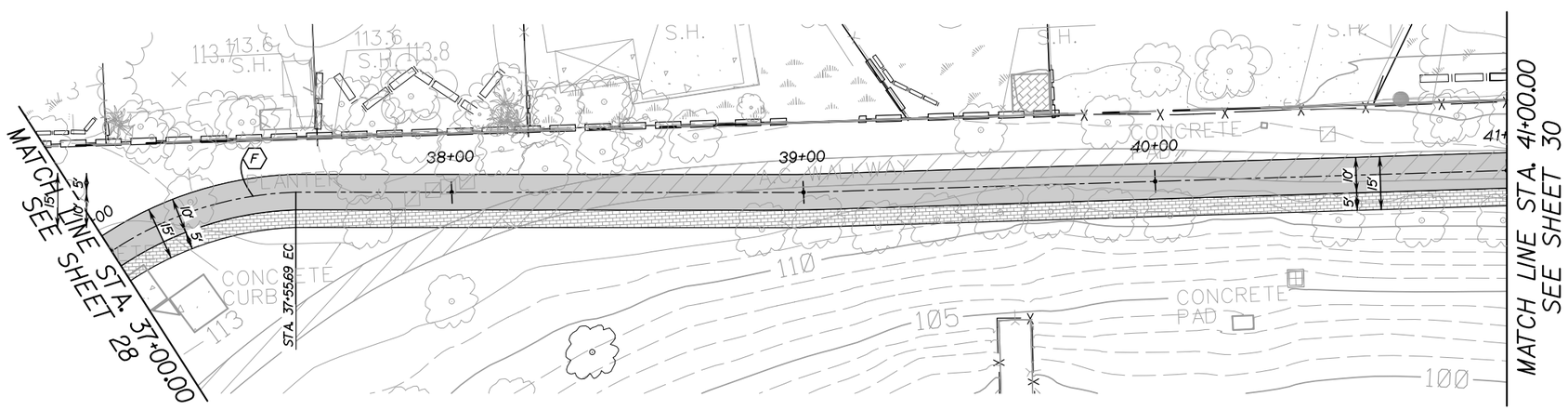

CURVE DATA				
	△	R	L	T
F	89°56'10"	100.08'	157.09'	99.97'

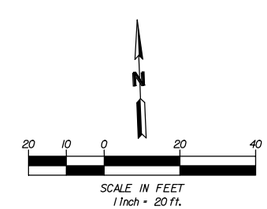

COUNTY OF ORANGE CALIFORNIA

MARK	DESCRIPTION	DATE	APPR.

PREPARED UNDER THE RESPONSIBLE CHARGE OF:

REGISTERED PROFESSIONAL ENGINEER FLORIAN B. WOJNAROWICZ No. 060987 Exp. 06/30/09 CIVIL STATE OF CALIFORNIA

DATE

DESIGNED BY: BLAIR NEUTER
DRAWN BY: CADD
CHECKED BY: JOHN LOAGUE
DRAWING CODE: F06-101-7
FILE NAME: -
PLOT DATE: DATE
SCALE: AS SHOWN

OC PUBLIC WORKS

PREPARED BY: AKM CONSULTING ENGINEERS

HASTER RETARDING BASIN (C05802)
PUMP STATION

ROAD PROFILE
FROM STA. 370.00
TO STA. 410.00

Sheet Reference Number

C–17

Sheet 29 of 104

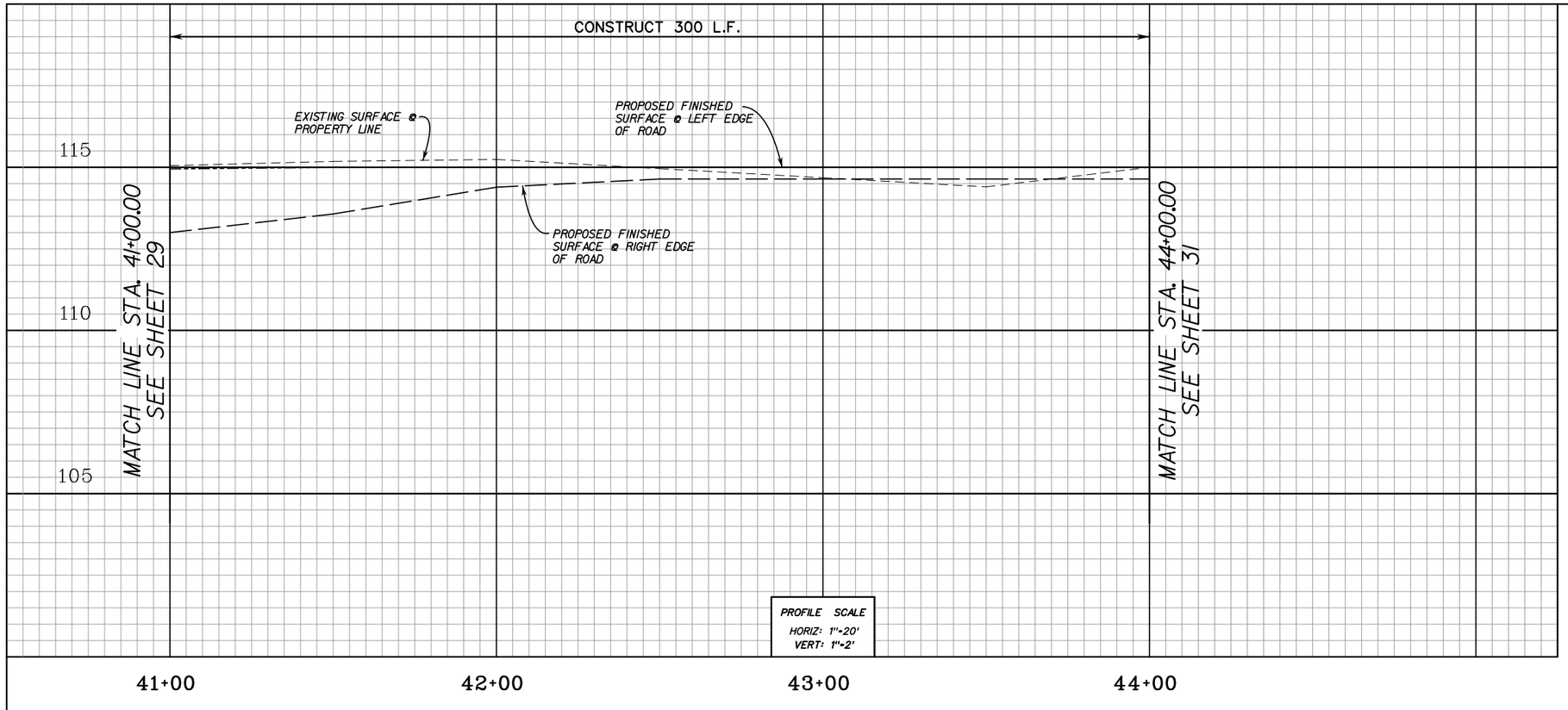

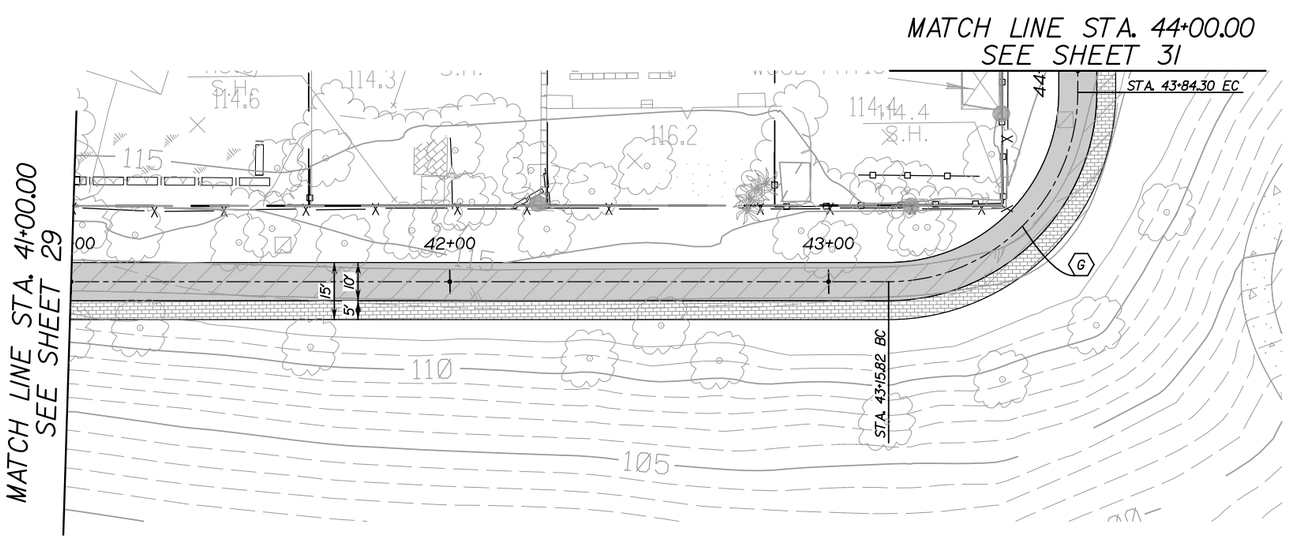

CURVE DATA				
	Δ	R	L	T
G	89°55'58"	50.00'	78.48'	49.94'

N

20 10 0 20 40

SCALE IN FEET
1 Inch = 20 ft.

COUNTY OF ORANGE CALIFORNIA

MARK	DESCRIPTION	DATE	APPR.

PREPARED UNDER THE RESPONSIBLE CHARGE OF:

REGISTERED PROFESSIONAL ENGINEER FLORIAN B. WOJNAROWICZ No. 060987 Exp. 06/30/09 CIVIL STATE OF CALIFORNIA

DATE

DESIGNED BY: BLAIR WEITER
DRAWN BY: CADD
CHECKED BY: JOHN LOAGUE
DRAWING CODE: F06-101-7
FILE NAME: -
PLOT DATE: DATE
SCALE: AS SHOWN

OC PUBLIC WORKS

PREPARED BY: AKM CONSULTING ENGINEERS

HASTER RETARDING BASIN (C05802) PUMP STATION

ROAD PROFILE FROM STA. 410.00 TO STA. 440.00

Sheet Reference Number

C–18

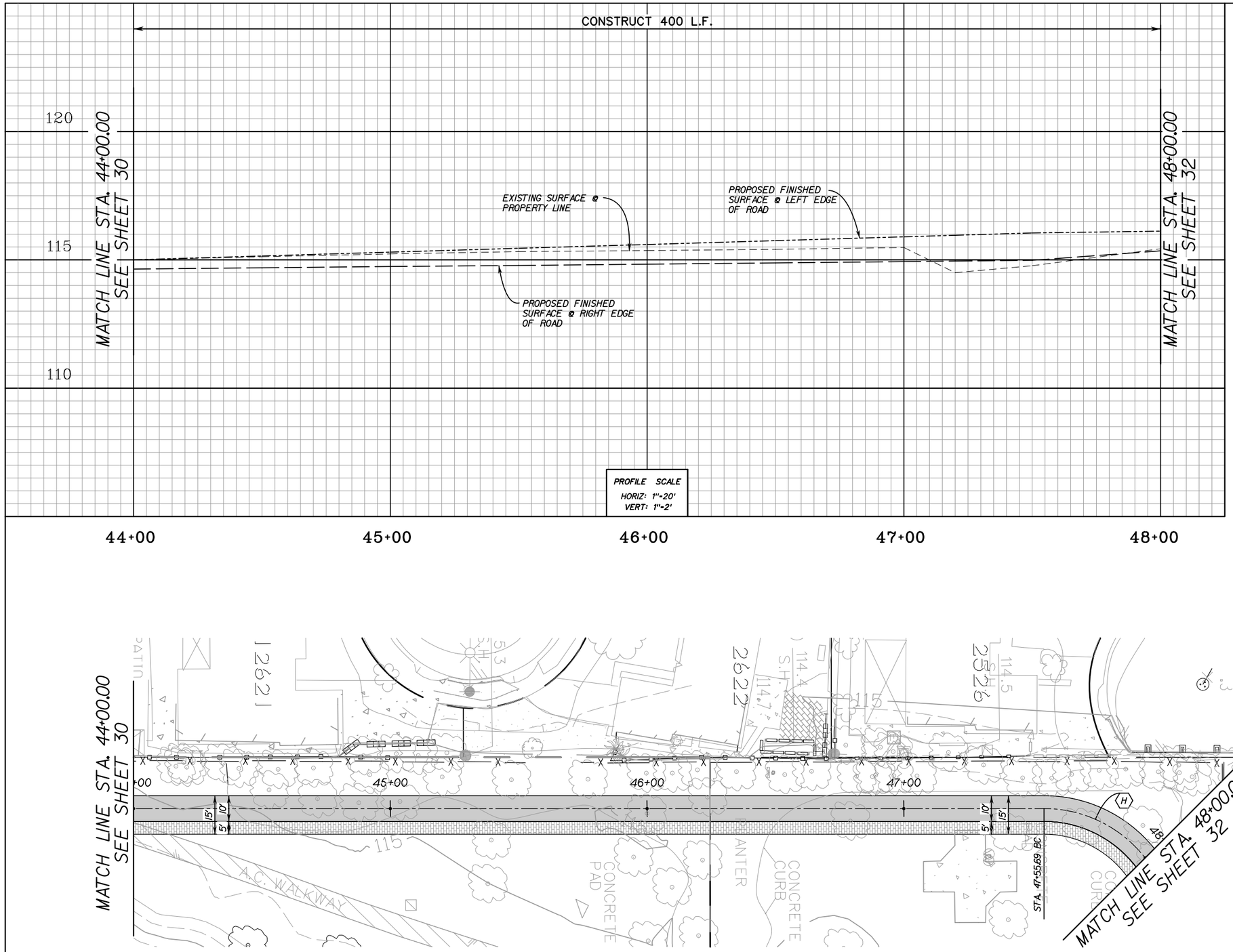

CURVE DATA				
	△	R	L	T
H	89°56'55"	50.00'	78.49'	49.96'

N

20 10 0 20 40

SCALE IN FEET
1 Inch = 20 ft.

COUNTY OF ORANGE CALIFORNIA

MARK	DESCRIPTION	DATE	APPR.

PREPARED UNDER THE RESPONSIBLE CHARGE OF:

REGISTERED PROFESSIONAL ENGINEER
FUNWAH B. WU-HOBIC
No. 60997
Exp. 6/30/09
CIVIL
STATE OF CALIFORNIA

DATE

DESIGNED BY: BLOOMENTER
DRAWN BY: CADD
CHECKED BY: JOHN LOAGUE
DRAWING CODE: F06-101-7
FILE NAME: -
PLOT DATE: $DATE$
SCALE: AS SHOWN

OC PUBLIC WORKS

PREPARED BY: AKM CONSULTING ENGINEERS

HASTER RETARDING BASIN (C05802)
PUMP STATION

ROAD PROFILE
FROM STA. 44+00.00
TO STA. 48+00.00

Sheet Reference Number

C–19

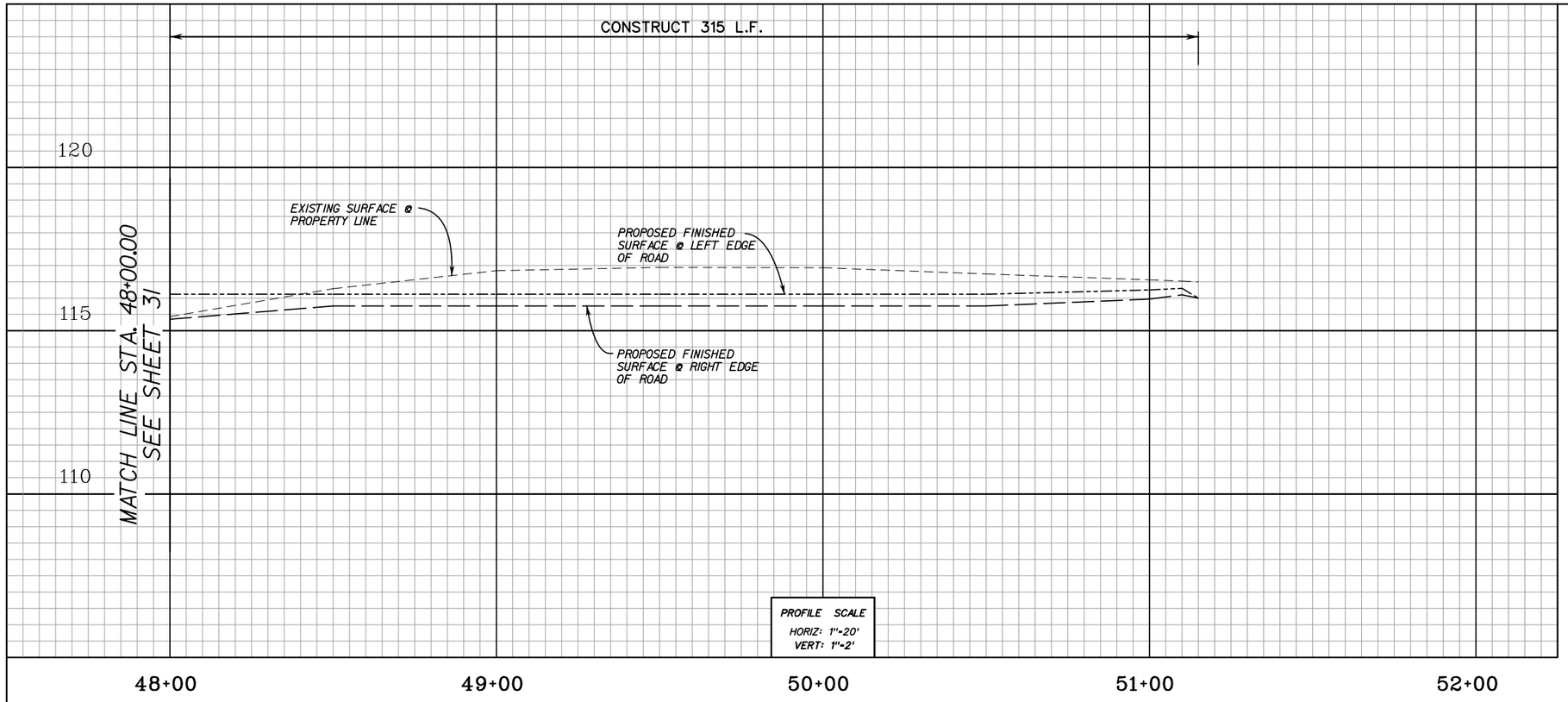

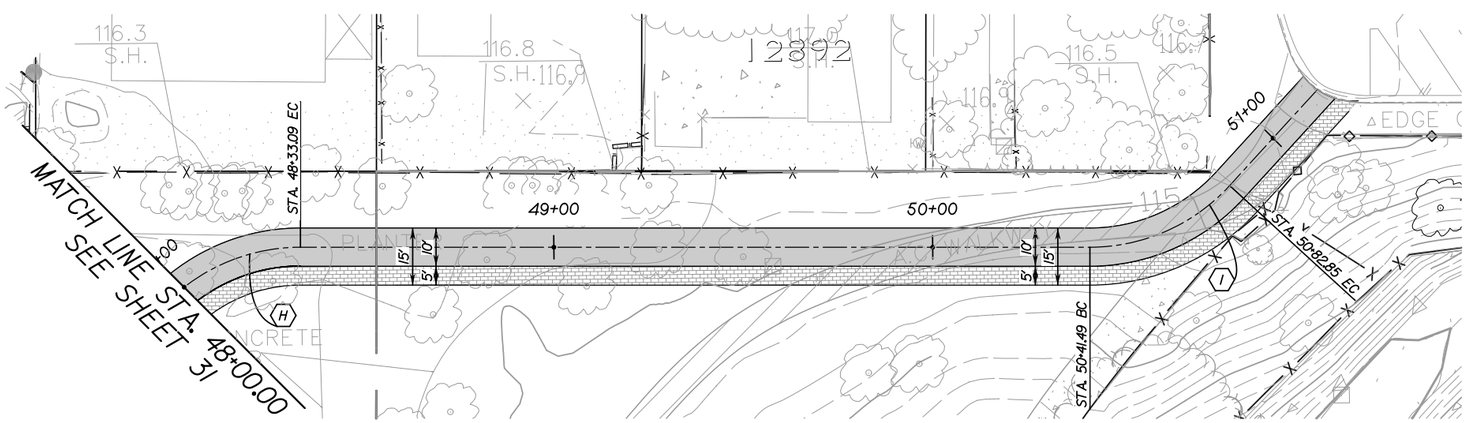

CURVE DATA				
	△	R	L	T
H	89°56'55"	50.00'	78.49'	49.96'
I	47°34'05"	50.00'	41.51'	22.04'

N

20 10 0 20 40

SCALE IN FEET
1 Inch = 20 ft.

COUNTY OF ORANGE CALIFORNIA

MARK	DESCRIPTION	DATE	APPR.

PREPARED UNDER THE RESPONSIBLE CHARGE OF:

REGISTERED PROFESSIONAL ENGINEER FLORIAN B. WOJNAROWICZ No. 060987 Exp. 6/30/09 CIVIL STATE OF CALIFORNIA

DATE

DESIGNED BY: BLAGRAVE/BUTTER
DRAWN BY: CADD
CHECKED BY: JOHN LOAGUE
DRAWING CODE: F06-101-7
FILE NAME: -
PLOT DATE: DATE
SCALE: AS SHOWN

OC PUBLIC WORKS

PREPARED BY: AKM CONSULTING ENGINEERS

HASTER RETARDING BASIN (C05802)
PUMP STATION

ROAD PROFILE
FROM STA. 48+00.00
TO STA. 51+15.00

Sheet Reference Number

C-20

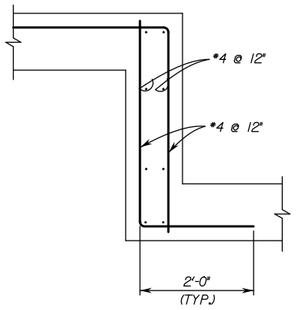

STEP FOOTING DETAIL

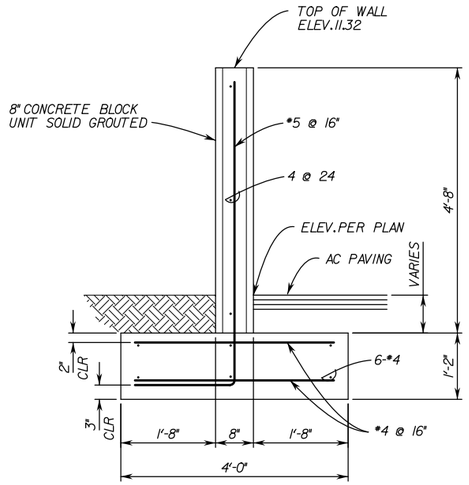

FLOOD WALL DETAIL 2/14

STA.28+00 TO STA.29+00
STA.30+00 TO STA.31+0

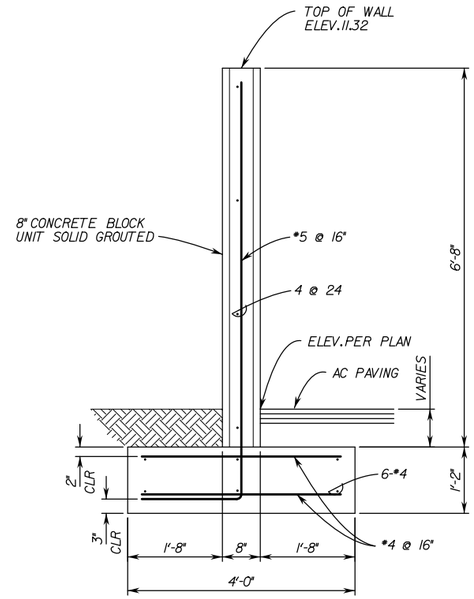

FLOOD WALL DETAIL 3/14

COUNTY OF ORANGE CALIFORNIA

MARK	DESCRIPTION	DATE	APPR.

PREPARED UNDER THE RESPONSIBLE CHARGE OF:

REGISTERED PROFESSIONAL ENGINEER JOHN A. LOAGUE No. 50092 Exp. 6/30/09 CIVIL STATE OF CALIFORNIA

DATE

DESIGNED BY:

DRAWN BY: CADD

CHECKED BY: JOHN LOAGUE

DRAWING CODE: F06-101-7

FILE NAME: -

PLOT DATE: $DATE$

SCALE: AS SHOWN

OC PUBLIC WORKS

PREPARED BY: AKM CONSULTING ENGINEERS

HASTER RETARDING BASIN (C05802) PUMP STATION

FLOOD WALL DETAILS

Sheet Reference Number

C-21

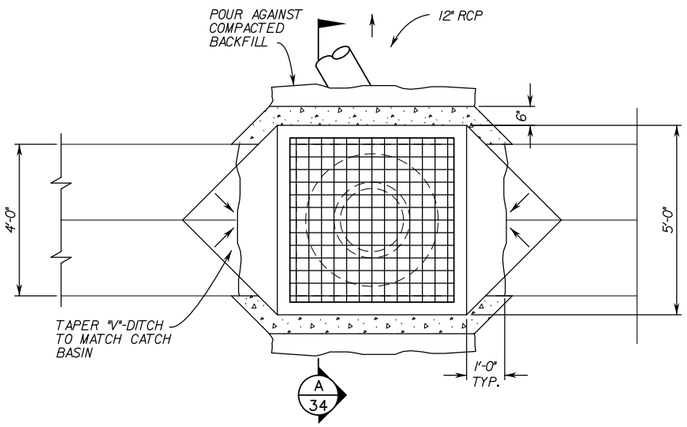

PLAN

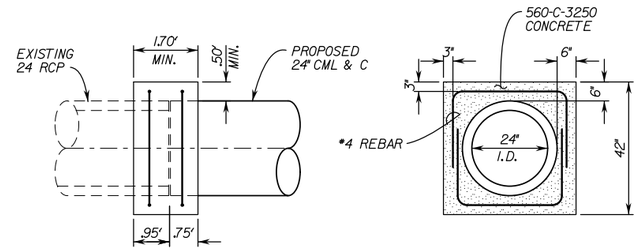

SIDE VIEW

FRONT VIEW

CONCRETE COLLAR DETAIL
(WELL 29" TO WASTE LINE)

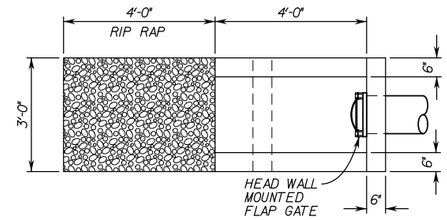

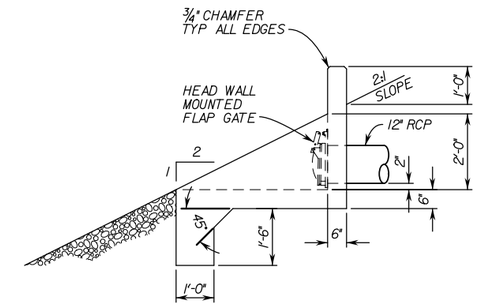

ROAD DRAIN HEAD WALL
& FLAP GATE

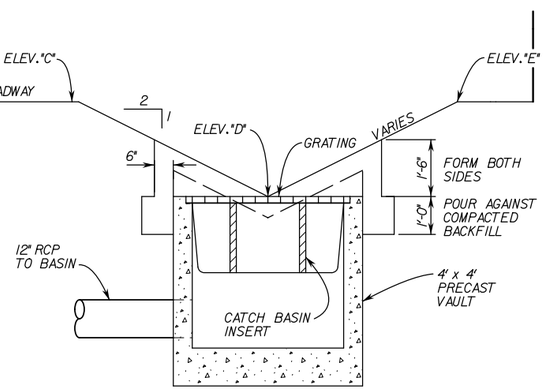

SECTION "A"

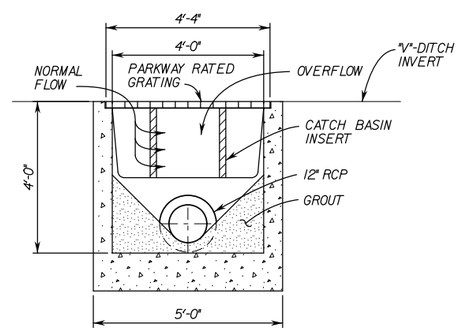

SECTION

PRECAST CONCRETE CATCH BASIN
WITH INSERT
@ 25+25 & 33+00

COUNTY OF ORANGE CALIFORNIA

MARK	DESCRIPTION	DATE	APPR.

PREPARED UNDER THE RESPONSIBLE CHARGE OF:

REGISTERED PROFESSIONAL ENGINEER JOHN A. LOAGUE No. 50292 Exp. 6/30/09 CIVIL STATE OF CALIFORNIA

DATE

DESIGNED BY:
DRAWN BY: CADD
CHECKED BY: JOHN LOAGUE
DRAWING CODE: F06-101-7
FILE NAME:
PLOT DATE: $DATE$
SCALE: AS SHOWN

OC PUBLIC WORKS

PREPARED BY: AKM CONSULTING ENGINEERS

HASTER RETARDING BASIN (C05802)
PUMP STATION

CATCH BASIN DETAILS

Sheet Reference Number

C-22

Sheet 34 of 104

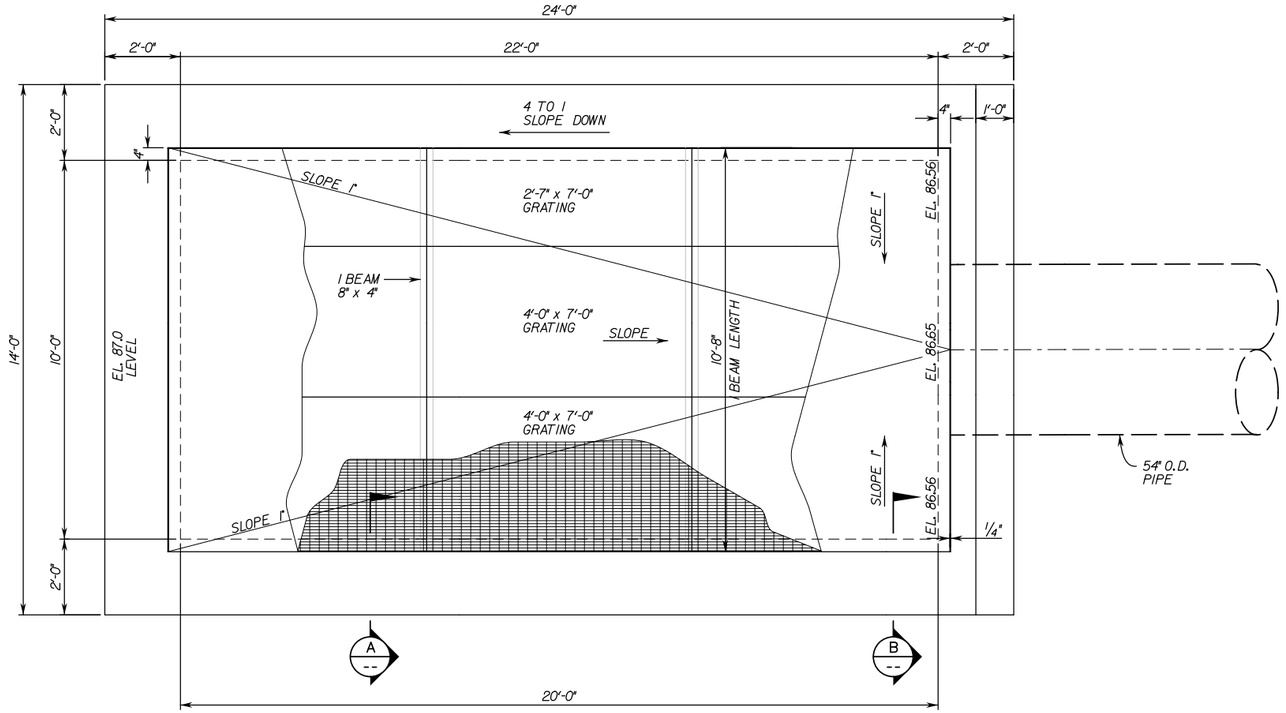

54" BASIN DRAIN INLET STRUCTURE PLAN VIEW

SCALE: 1/2" = 1'-0"

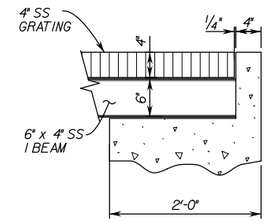

SECTION A

SCALE: 1" = 1'-0"

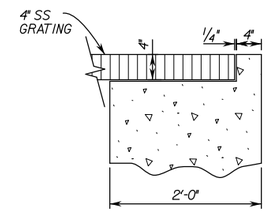

SECTION B

SCALE: 1" = 1'-0"

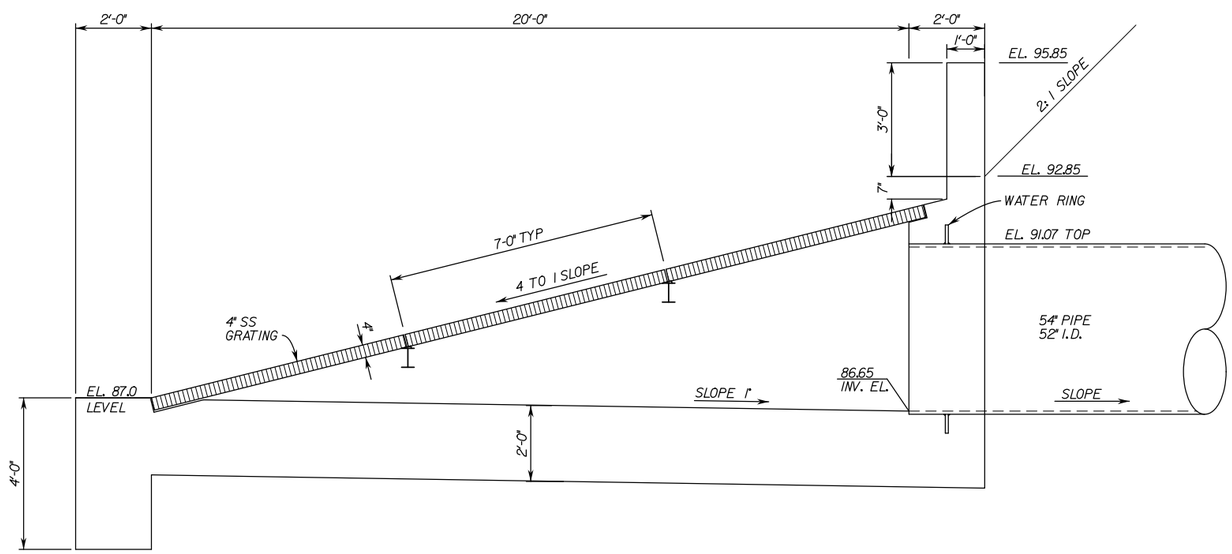

54" BASIN DRAIN INLET STRUCTURE SECTION VIEW

SCALE: 1/2" = 1'-0"

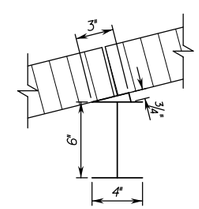

6x4 SS I BEAM

NOT TO SCALE

NOTE:
USE 3" x 1/4" SS ANGLE
CUT 1 LEG TO 3/4" & STITCH
WELD TO TOP OF I BEAM

COUNTY OF ORANGE CALIFORNIA

MARK	DESCRIPTION	DATE	APPR.

PREPARED UNDER THE RESPONSIBLE CHARGE OF:

REGISTERED PROFESSIONAL ENGINEER JOHN A. LOAGUE No. 50292 Exp. 6/30/09 CIVIL STATE OF CALIFORNIA

DATE

DESIGNED BY:

DRAWN BY: CADD

CHECKED BY: JOHN LOAGUE

DRAWING CODE: F06-101-7

FILE NAME: -

PLOT DATE: $DATE$

SCALE: AS SHOWN

OC PUBLIC WORKS

PREPARED BY: AKM CONSULTING ENGINEERS

HASTER RETARDING BASIN (C05802) PUMP STATION

BASIN DRAIN PIPE AND INLET STRUCTURE

Sheet Reference Number

C-23

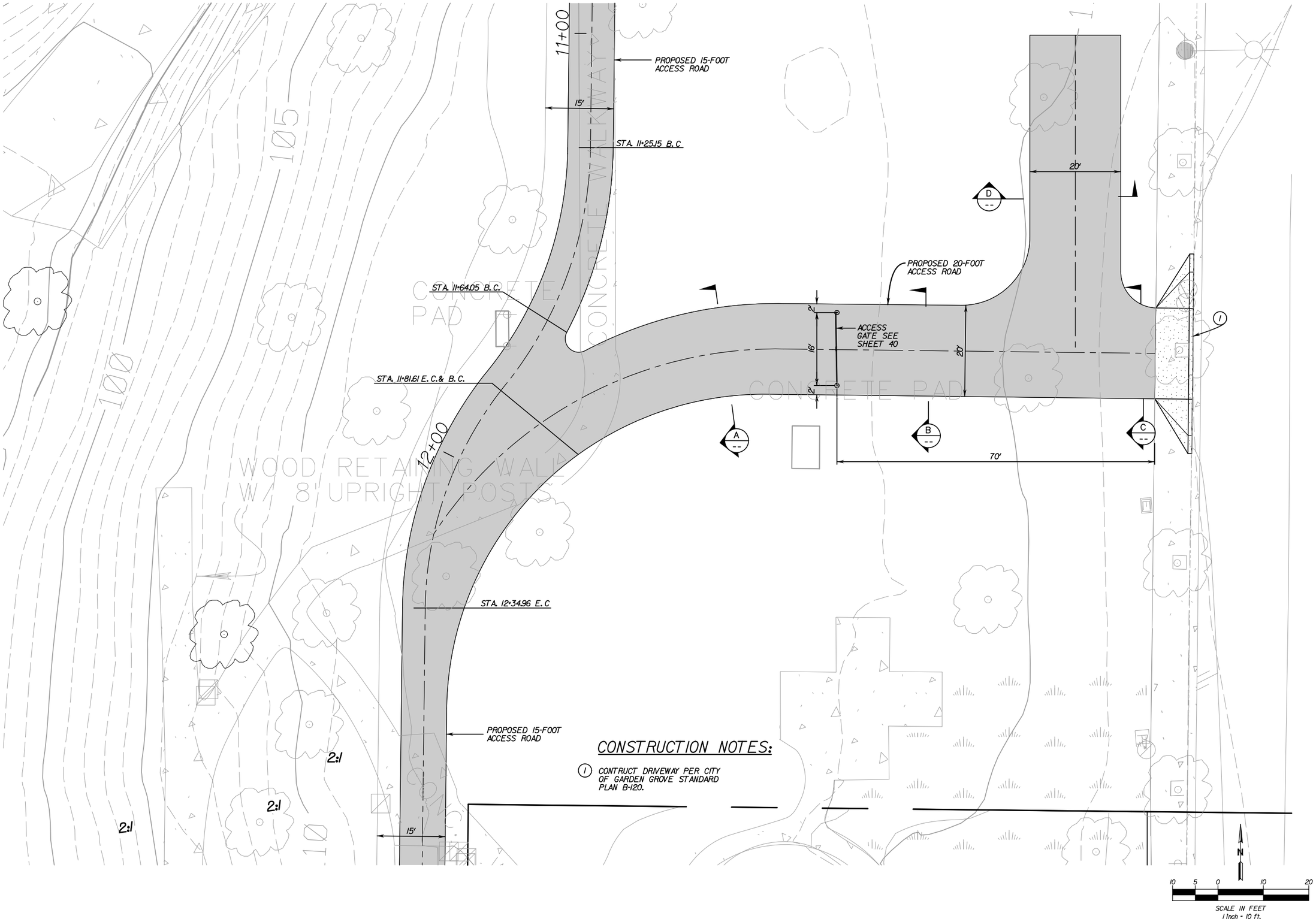

CONSTRUCTION NOTES:

1. CONTRUCT DRIVEWAY PER CITY OF GARDEN GROVE STANDARD PLAN B-120.

COUNTY OF ORANGE CALIFORNIA

MARK	DESCRIPTION	DATE	APPR.

PREPARED UNDER THE RESPONSIBLE CHARGE OF:

REGISTERED PROFESSIONAL ENGINEER JOHN A. LOAGUE No. 50092 Exp. 6/30/09 CIVIL STATE OF CALIFORNIA

DATE

DESIGNED BY:

DRAWN BY: CADD

CHECKED BY: JOHN LOAGUE

DRAWING CODE: F06-101-7

FILE NAME: -

PLOT DATE: $DATE$

SCALE: AS SHOWN

OC PUBLIC WORKS

PREPARED BY: AKM CONSULTING ENGINEERS

HASTER RETARDING BASIN (C05802) PUMP STATION

HASTER STREET ACCESS ROAD

Sheet Reference Number

C-24

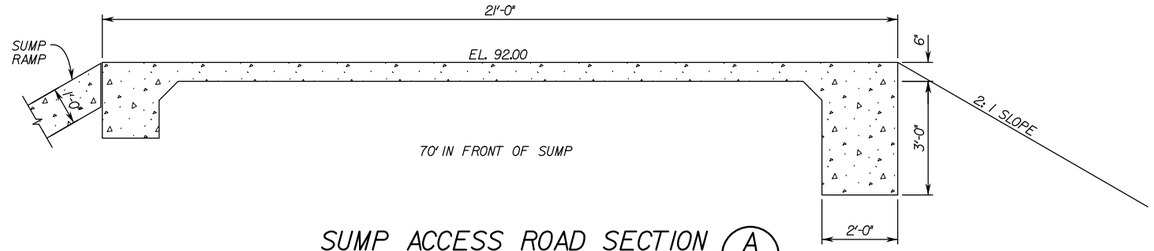

SUMP ACCESS ROAD SECTION A/14

SCALE: 1/2" = 1'-0"

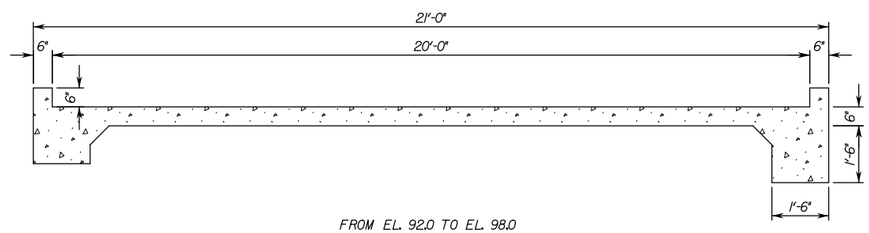

FROM EL. 92.0 TO EL. 98.0

SUMP ACCESS ROAD SECTION B/14

SCALE: 1/2" = 1'-0"

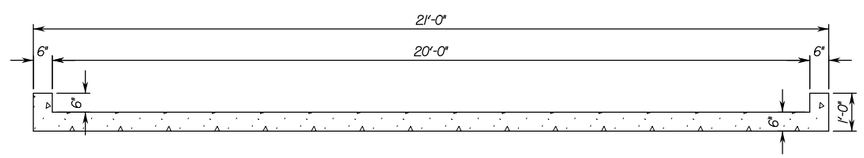

FROM EL. 98.0 TO EL. 114.0

SUMP ACCESS ROAD SECTION C/14

SCALE: 1/2" = 1'-0"

COUNTY OF ORANGE CALIFORNIA

MARK	DESCRIPTION	DATE	APPR.

PREPARED UNDER THE RESPONSIBLE CHARGE OF:

REGISTERED PROFESSIONAL ENGINEER JOHN A. LOAGUE No. 50292 Exp. 6/30/09 CIVIL STATE OF CALIFORNIA

DATE

DESIGNED BY: GLEN DEITER
DRAWN BY: CADD
CHECKED BY: JOHN LOAGUE
DRAWING CODE: F06-101-7
FILE NAME: -
PLOT DATE: $DATE$
SCALE: AS SHOWN

OC PUBLIC WORKS

PREPARED BY: AKM CONSULTING ENGINEERS

HASTER RETARDING BASIN (C05B02) PUMP STATION

SUMP ACCESS ROAD SECTION

Sheet Reference Number

C-25

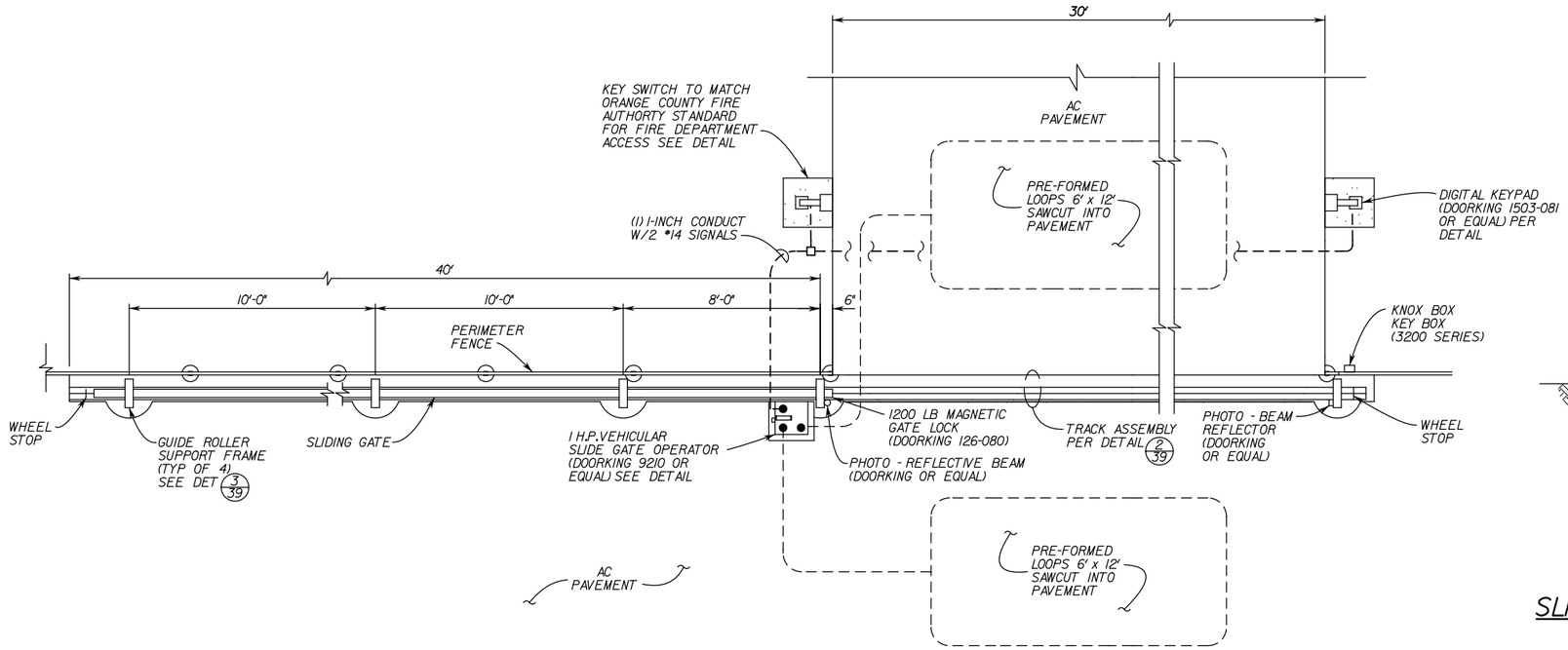

PLAN

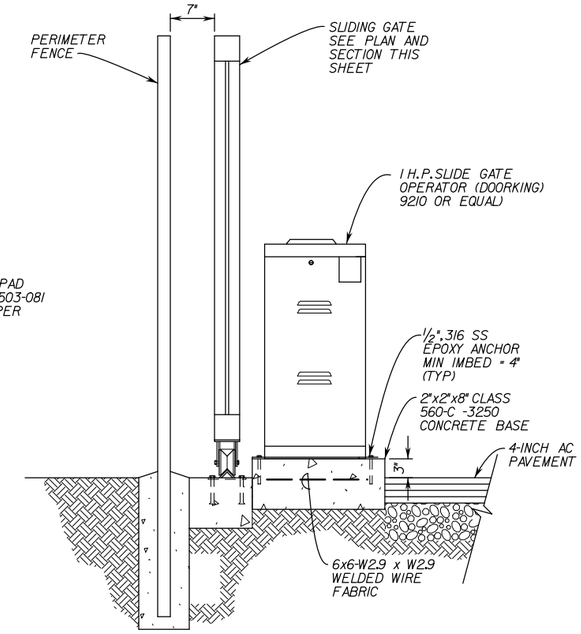

SLIDE GATE OPERATOR BASE DETAIL

SCALE: NONE

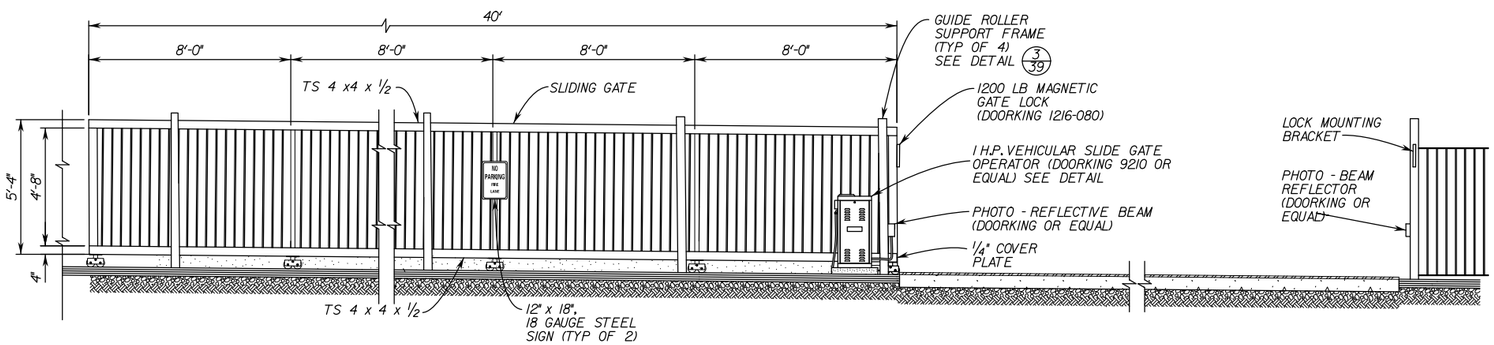

SLIDING ELECTRIC GATE PLAN AND ELEVATION

SCALE: NONE

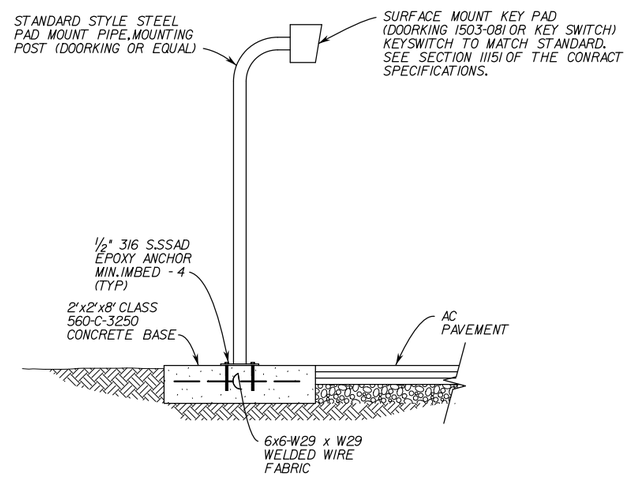

KEYPAD/KEYSWITCH DETAIL

SCALE: NONE

COUNTY OF ORANGE CALIFORNIA

MARK	DESCRIPTION	DATE	APPR.

PREPARED UNDER THE RESPONSIBLE CHARGE OF:

REGISTERED PROFESSIONAL ENGINEER JOHN A. LOAGUE No. 50092 Exp. 6/30/09 CIVIL STATE OF CALIFORNIA

DATE

DESIGNED BY: GLEN DEITER
DRAWN BY: CADD
CHECKED BY: JOHN LOAGUE
DRAWING CODE: F06-101-7
FILE NAME: -
SCALE: AS SHOWN
PLOT DATE: $DATE$

OC PUBLIC WORKS

PREPARED BY: AKM CONSULTING ENGINEERS

HASTER RETARDING BASIN (C05802) PUMP STATION

ELECTRIC GATE PLAN, SECTION AND DETAILS

Sheet Reference Number

C-26

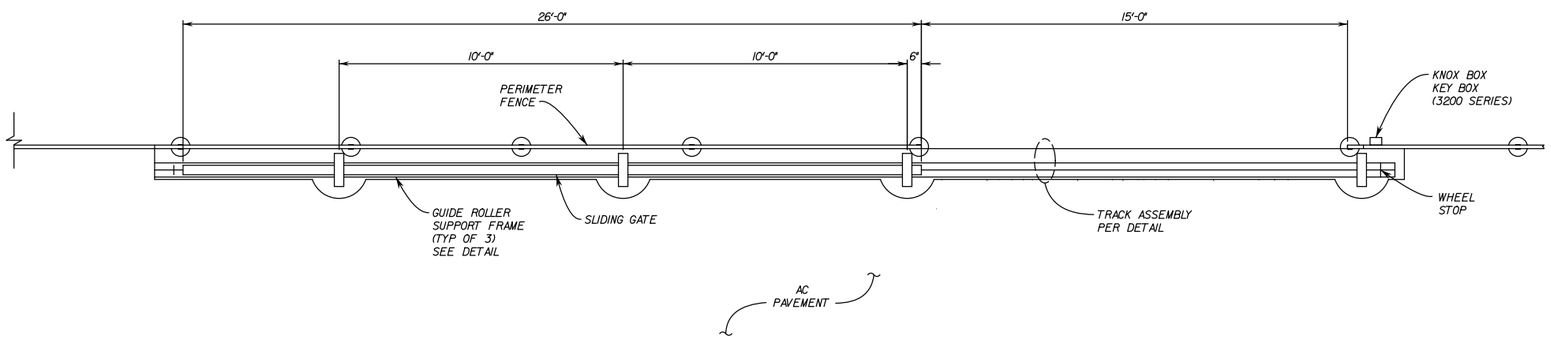

PLAN

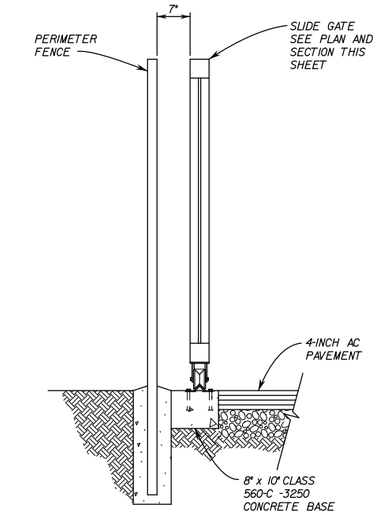

TRACK BASE DETAIL

SCALE: 3/4" = 1'-0"

1/38

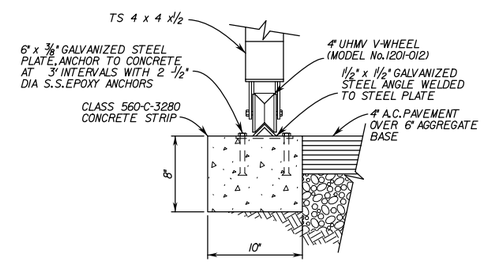

TRACK ASSEMBLY DETAIL

SCALE: 1 1/2" = 1'-0"

2/38

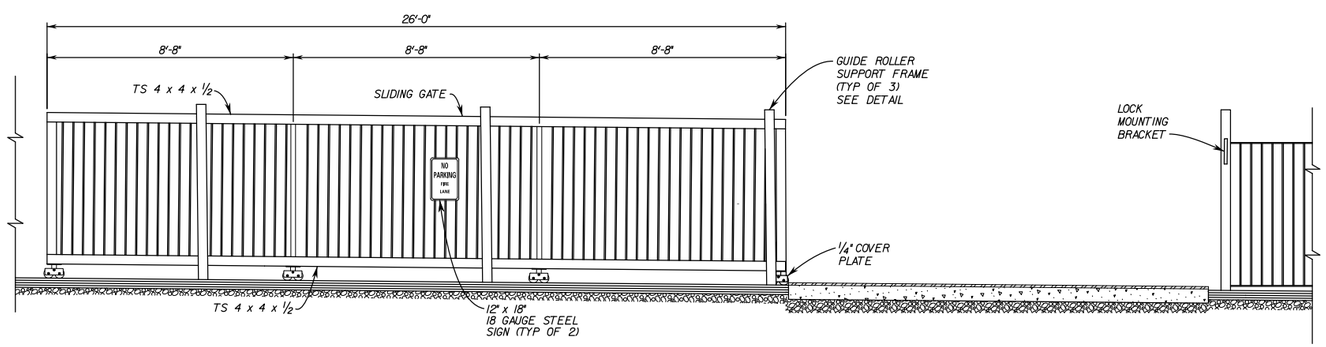

SLIDE MANUAL GATE PLAN AND ELEVATION

SCALE: 3/8" = 1'-0"

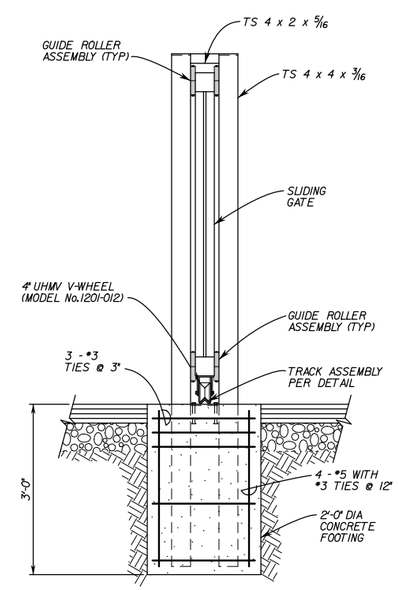

GUIDE ROLLER SUPPORT FRAME

SCALE: 3/4" = 1'-0"

3/38

COUNTY OF ORANGE CALIFORNIA

MARK	DESCRIPTION	DATE	APPR.

PREPARED UNDER THE RESPONSIBLE CHARGE OF:

REGISTERED PROFESSIONAL ENGINEER FOUAD B. MOUMNEH No. 062887 Exp. 06/30/09 CIVIL STATE OF CALIFORNIA

DATE

DESIGNED BY: BLAKE WINTER
DRAWN BY: CADD
CHECKED BY: JOHN LOAGUE
DRAWING CODE: F06-101-7
FILE NAME:
PLOT DATE: $DATE$
SCALE: AS SHOWN

OC PUBLIC WORKS

PREPARED BY: AKM CONSULTING ENGINEERS

HASTER RETARDING BASIN (C05802) PUMP STATION

MANUAL GATE PLAN, SECTION AND DETAILS

Sheet Reference Number

C-27

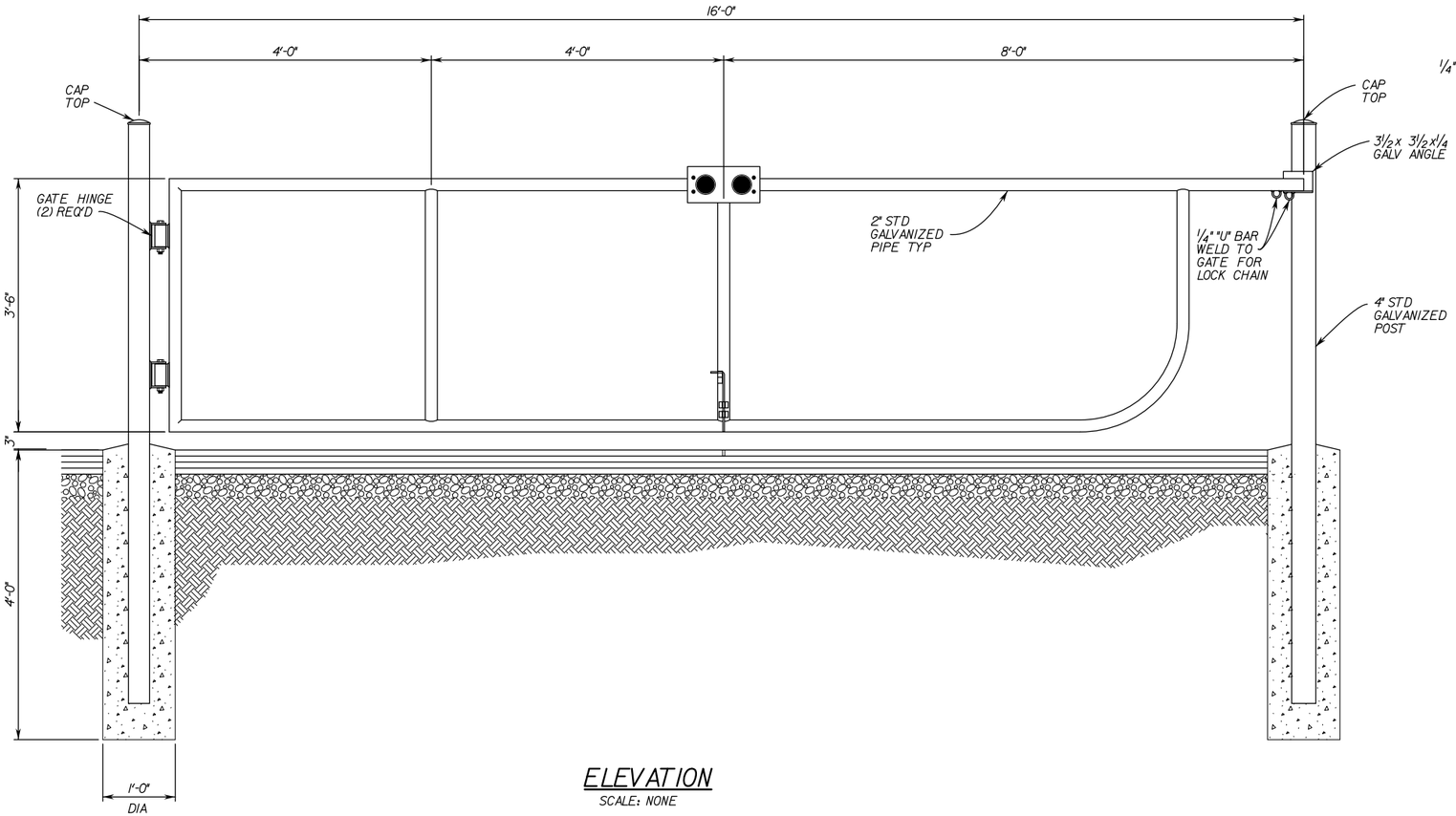

ELEVATION

SCALE: NONE

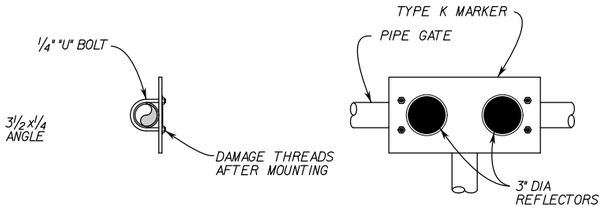

WARNING SIGN MOUNTING PIPE GATE

SCALE: NONE

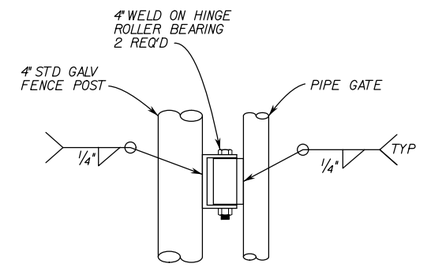

GATE HINGE DETAIL

SCALE: NONE

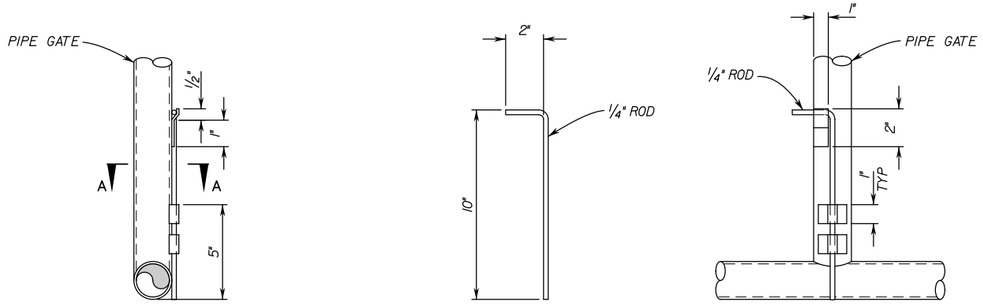

GATE RETAINING DEVICE DETAIL

SCALE: NONE

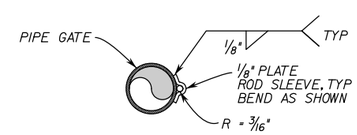

SECTION A - A

SCALE: NONE

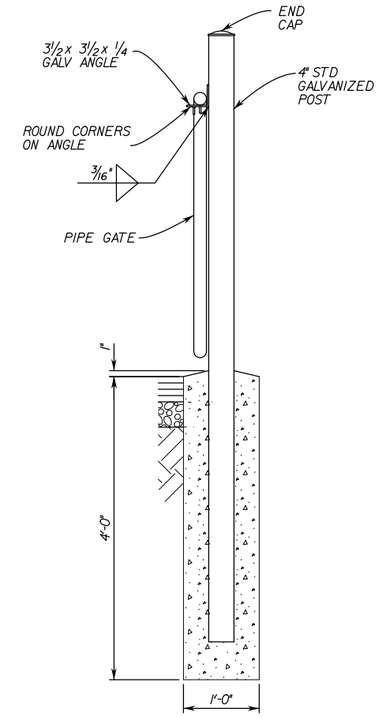

END POST DETAIL

SCALE: NONE

COUNTY OF ORANGE CALIFORNIA

MARK	DESCRIPTION	DATE	APPR.

PREPARED UNDER THE RESPONSIBLE CHARGE OF:

REGISTERED PROFESSIONAL ENGINEER FOWAD B. MOUNSEF No. 60997 Exp. 6/30/09 CIVIL STATE OF CALIFORNIA

DATE

DESIGNED BY: BLAIR WEITER
DRAWN BY: CADD
CHECKED BY: JOHN LOAGUE
DRAWING CODE: F06-101-7
FILE NAME: -
PLOT DATE: $DATE$
SCALE: AS SHOWN

OC PUBLIC WORKS

PREPARED BY: AKM CONSULTING ENGINEERS

HASTER RETARDING BASIN (C05B02) PUMP STATION

SWING GATE ELEVATION AND DETAILS

Sheet Reference Number

C-28

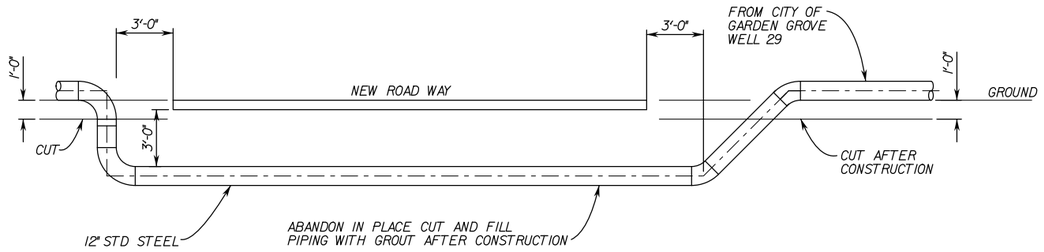

ROAD CROSSING BLOW-OFF TO WASTE BY-PASS LINE

SCALE: 1/4" = 1'-0"

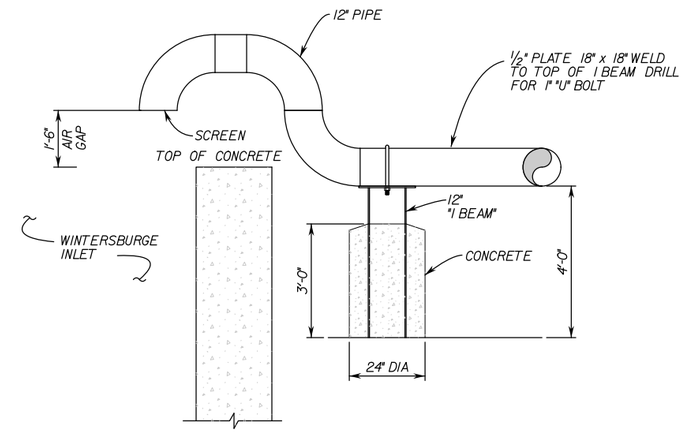

VIEW A - A

SCALE: 1/2" = 1'-0"

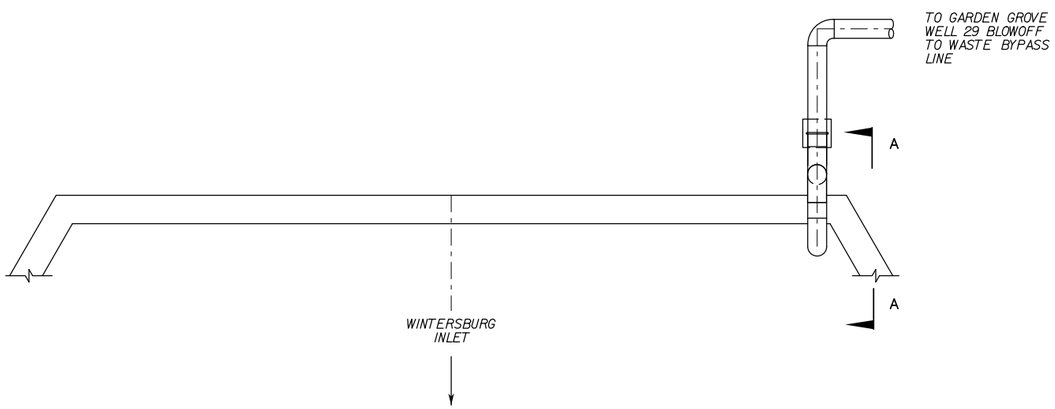

2500 GPM 12" PIPE = 7 FPS
50,000 GAL x 2 STARTS/DAY = 100,000 GAL

ADD 100,000 GAL/DAY TO PUMPING CAPACITY

PLAN VIEW

SCALE: 1/4" = 1'-0"

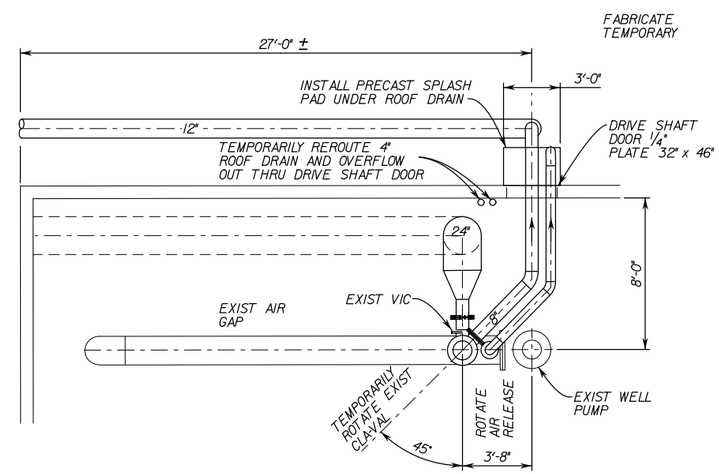

ALL EQUIPMENT TO BE PLACED BACK IN ORIGINAL LOCATION AND REPAINTED AFTER BY PASS IS NO LONGER NEEDED.

GARDEN GROVE WELL 29 BLOWOFF TO WASTE BYPASS LINE

SCALE: 1/4" = 1'-0"

COUNTY OF ORANGE CALIFORNIA

MARK	DESCRIPTION	DATE	APPR.

PREPARED UNDER THE RESPONSIBLE CHARGE OF:

REGISTERED PROFESSIONAL ENGINEER JOHN A. LOAGUE No. 50292 Exp. 6/30/09 CIVIL STATE OF CALIFORNIA

DATE

DESIGNED BY: GLEN DEITER
DRAWN BY: CADD
CHECKED BY: JOHN LOAGUE
DRAWING CODE: F06-101-7
FILE NAME: -
PLOT DATE: $DATE$
SCALE: AS SHOWN

OC PUBLIC WORKS

PREPARED BY: AKM CONSULTING ENGINEERS

HASTER RETARDING BASIN (C05802) PUMP STATION

CITY OF GARDEN GROVE WELL TEMPORARY BLOW-OFF TO WASTE LINE

Sheet Reference Number

C-29

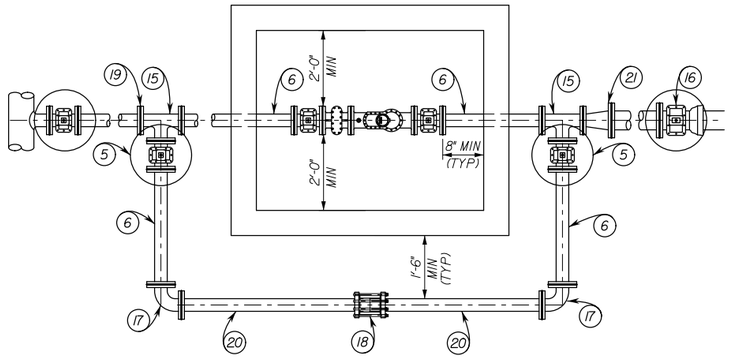

ITEM NO.	DESCRIPTION	QTY.	SIZE
1.	COMPOUND WATER METER SRH SENSUS W/ TOUCH READ METER	1	4"
2.	BRONZE STRAINER	1	4"
3.	RESILIENT WEDGE GATE VALVE, FLG'D W/2" OPERATING NUT	4	4"
4.	TAPPING SLEEVE AND GATE VALVE PER STD. B-750	1	8"x 4"
5.	GATE VALVE CAN ASSEMBLY PER STD. B-753	1	
6.	DUCTILE IRON PIPE SPOOL, FLG'D	6	4"
7.	AWWA C-900 PVC WATER MAIN PIPE, CLASS 200	1	6"
8.	SERVICE SADDLE FOR DIP PIPE, WITH 2" FEMALE I.P.THREADS	2	
9.	-		
10.	-		
11.	-		
12.	-		
13.	METER VAULT	1	
14.	-		
15.	DUCTILE IRON TEE, FLG'D	2	4"
16.	RESILIENT WEDGE GATE VALVE, FLG x MJ	1	6"
17.	DUCTILE IRON 90° BEND, FLG'D		4"
18.	FLEX COUPLING (SMITH BLAIR)		4"
19.	FLANGE COUPLING ADAPTOR FLG x MJ		4"
20.	DUCTILE IRON PIPE SPOOL, FLG'D x P.E. (CUT TO FIT)	1	4"
21.	DUCTILE IRON FLG x FLG CONC REDUCER	1	4" x 6"

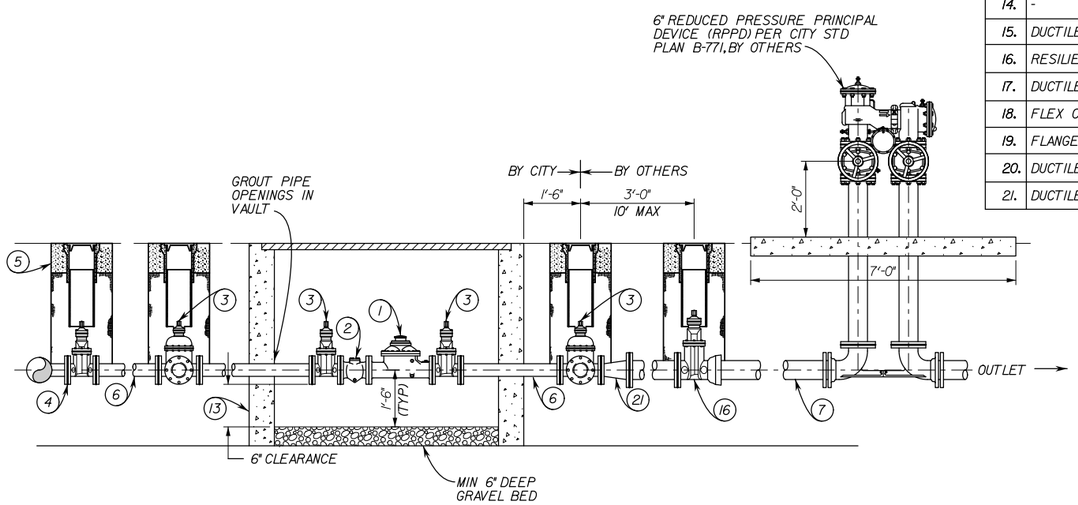

4" COMPOUND WATER METER AND SERVICE INSTALLATION

COUNTY OF ORANGE CALIFORNIA

MARK	DESCRIPTION	DATE	APPR.

PREPARED UNDER THE RESPONSIBLE CHARGE OF:

REGISTERED PROFESSIONAL ENGINEER FOWAD B. MOUNBOUC No. 060887 Exp. 6/30/10 CIVIL STATE OF CALIFORNIA

DATE

DESIGNED BY: BLAIR WEITER
DRAWN BY: CADD
CHECKED BY: JOHN LOAGUE
DRAWING CODE: F06-101-7
FILE NAME:
PLOT DATE: $DATE$
SCALE: AS SHOWN

OC PUBLIC WORKS

PREPARED BY: AKM CONSULTING ENGINEERS

HASTER RETARDING BASIN (C05B02) PUMP STATION

WATER METER INSTALLATION

Sheet Reference Number

C-30

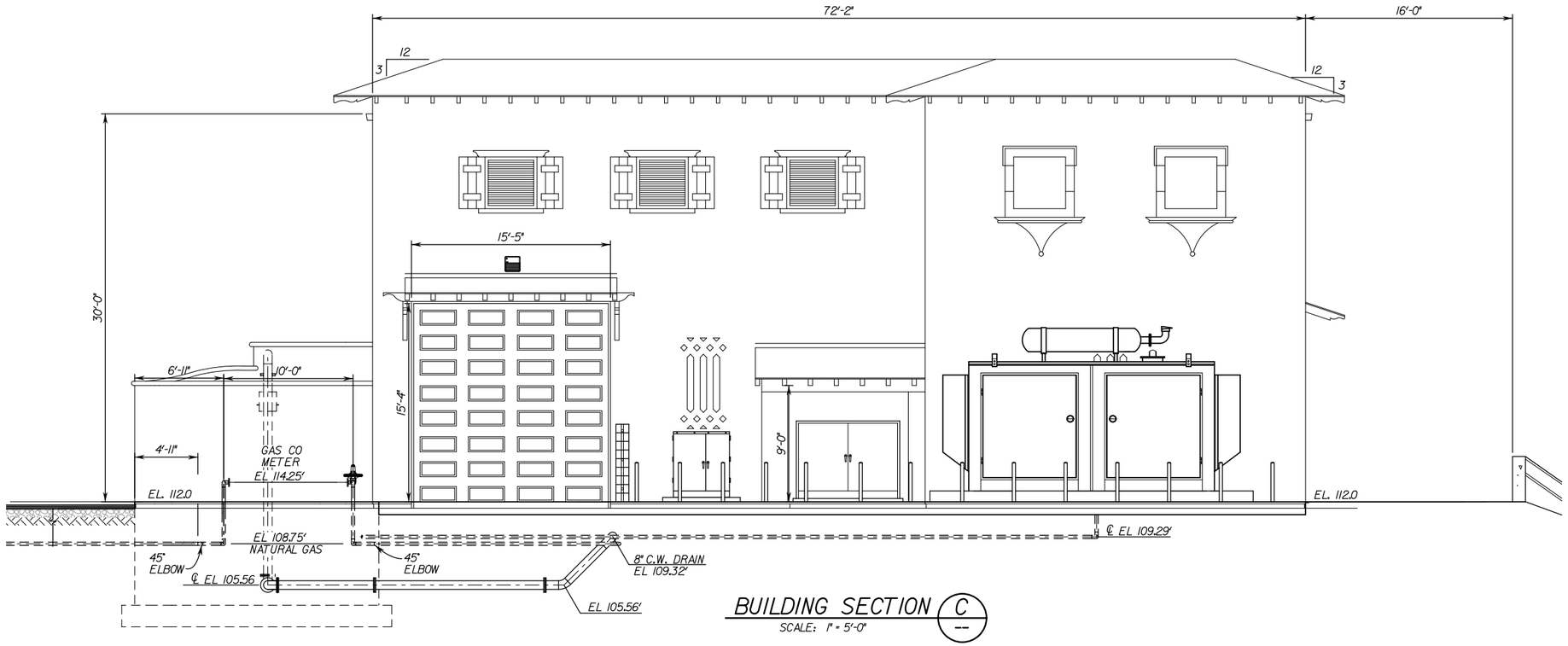

BUILDING SECTION C
SCALE: 1" = 5'-0"

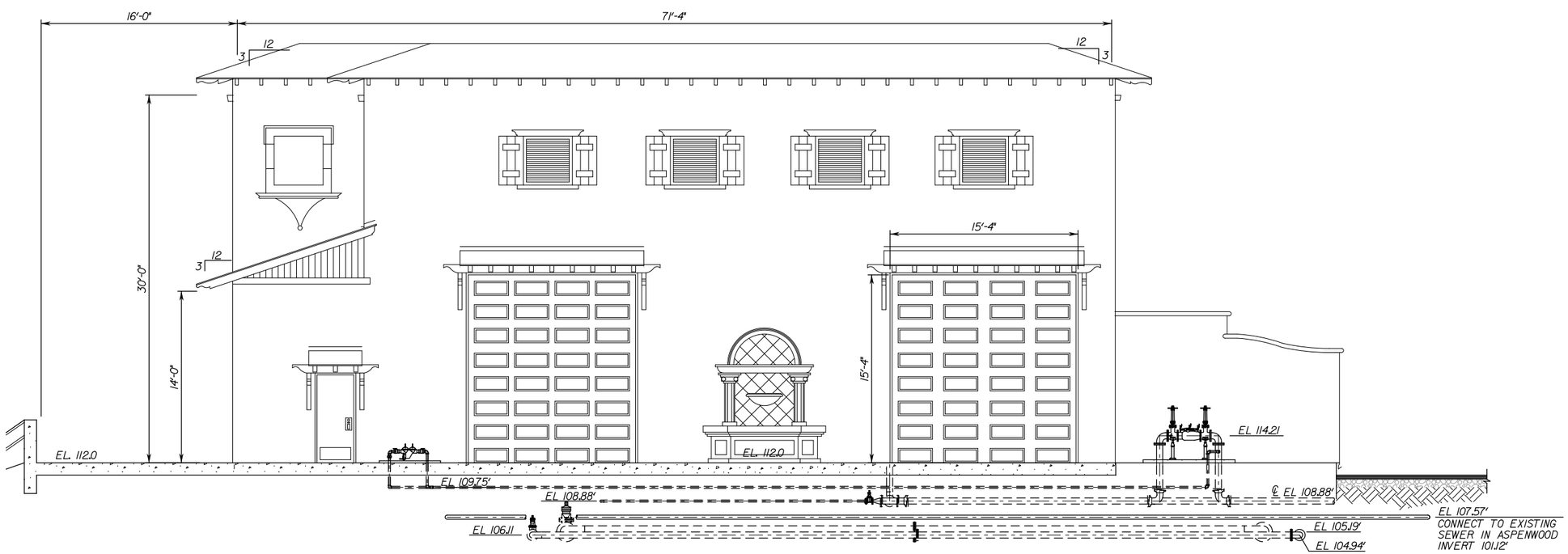

BUILDING SECTION D
SCALE: 1" = 5'-0"

COUNTY OF ORANGE CALIFORNIA

MARK	DESCRIPTION	DATE	APPR.

PREPARED UNDER THE RESPONSIBLE CHARGE OF:

REGISTERED PROFESSIONAL ENGINEER JOHN A. LOAGUE No. 50292 Exp. 6/30/09 CIVIL STATE OF CALIFORNIA

DATE

DESIGNED BY:

DRAWN BY: CADD

CHECKED BY: JOHN LOAGUE

DRAWING CODE: F06-101-7

FILE NAME: -

PLOT DATE: $DATE$

SCALE: AS SHOWN

OC PUBLIC WORKS

PREPARED BY: AKM CONSULTING ENGINEERS

HASTER RETARDING BASIN (C05802) PUMP STATION

MECHANICAL BUILDING SECTIONS

Sheet Reference Number

C-31

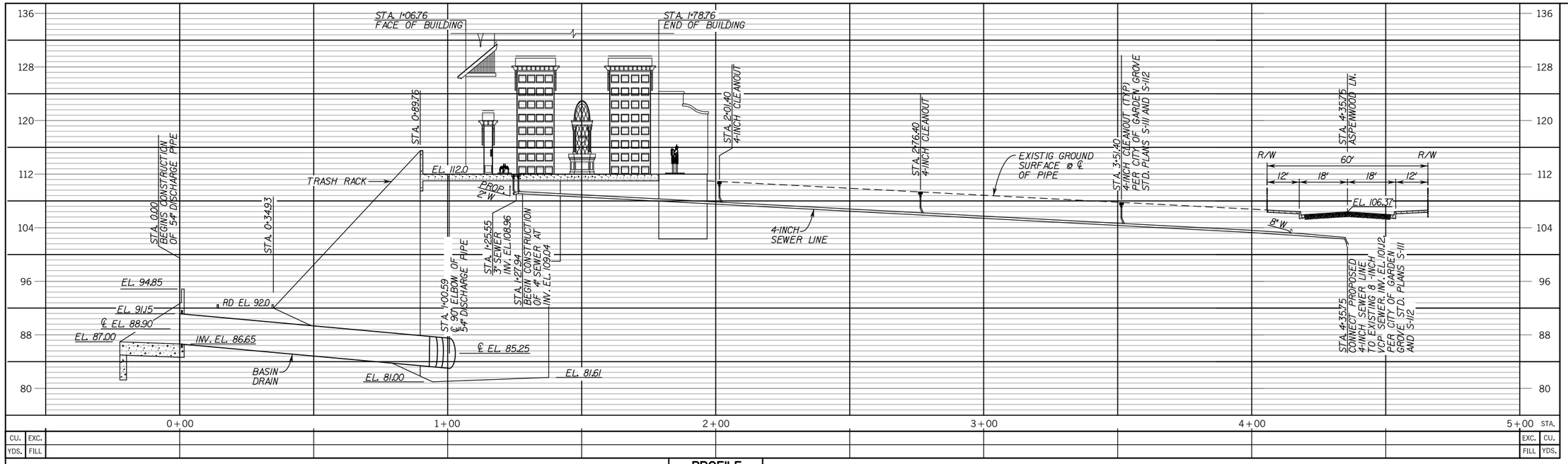

PROFILE
HORIZ. 1"=20'
VERT. 1"=8'

PIPING PROFILE

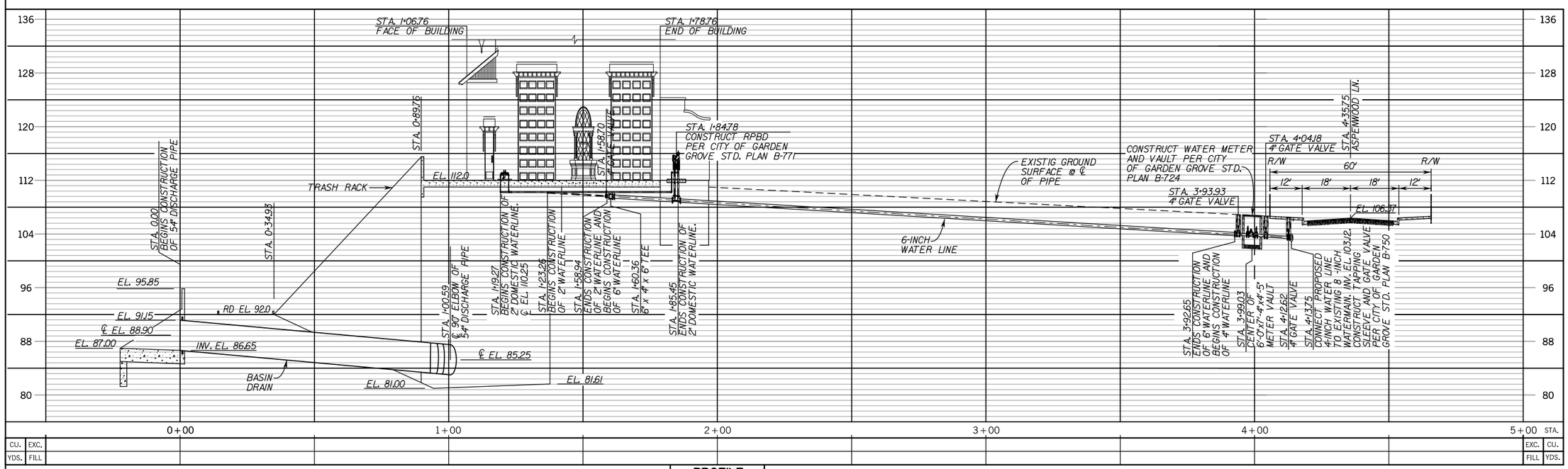

PROFILE
HORIZ. 1"=20'
VERT. 1"=8'

PIPING PROFILE

COUNTY OF ORANGE CALIFORNIA

MARK	DESCRIPTION	DATE	APPR.

PREPARED UNDER THE RESPONSIBLE CHARGE OF:

REGISTERED PROFESSIONAL ENGINEER JOHN A. LOAGUE No. 50292 Exp. 6/30/09 CIVIL STATE OF CALIFORNIA

DATE

DESIGNED BY: BLOOMENMEITER
DRAWN BY: CADD
CHECKED BY: JOHN LOAGUE
DRAWING CODE: F06-101-7
FILE NAME: -
PLOT DATE: DATE
SCALE: AS SHOWN

OC PUBLIC WORKS

PREPARED BY: AKM CONSULTING ENGINEERS

HASTER RETARDING BASIN (C05802) PUMP STATION

4-INCH SEWER LINE AND 6-INCH WATERLINE PROFILES

Sheet Reference Number

C-32

GENERAL STRUCTURAL NOTES

LOADS:

1. CODE: THE CALIFORNIA BUILDING CODE, 2007 EDITION (C.B.C.)

2. LOADS:
   ROOF LOAD = 20 PSF MINIMUM
   FLOOR LOAD = 100 PSF MINIMUM
   CBC WIND PRESSURE = 85 MPH WIND SPEED
   EXPOSURE C
   CBC SEISMIC SITE CLASS = D, Fa =1.0, Fv =1.5,
   Ss =1.37, S1 =0.49, SEISMIC DESIGN CATEGORY = D

3. REFER TO INDIVIDUAL STRUCTURE DRAWINGS FOR ADDITIONAL LOADS, NOTES, AND REQUIREMENTS.

4. UNIT WEIGHTS:
   SOIL = 120 PCF
   FLUID = 62.5 PCF

GENERAL:

1. CONTRACTOR SHALL VERIFY ALL CONTROLLING FIELD DIMENSIONS AND SITE CONDITIONS BEFORE ORDERING OR FABRICATING ANY MATERIALS.

2. STRUCTURAL DIMENSIONS RELATED TO MECHANICAL OR STRUCTURAL EQUIPMENT SHALL BE VERIFIED BY THE CONTRACTOR PRIOR TO CONSTRUCTION.

3. STRUCTURAL DRAWINGS SHALL BE USED IN COORDINATION WITH CIVIL, ARCHITECTURAL, MECHANICAL, ELECTRICAL AND SHOP DRAWINGS PROVIDED BY EQUIPMENT MANUFACTURER.

4. IT IS THE RESPONSIBILITY OF THE CONTRACTOR TO PRESERVE AND PROTECT ADJACENT STRUCTURES. SHEETING AND SHORING SHALL BE INSTALLED AS REQUIRED TO RETAIN EARTH BANKS AND PROTECTING EXISTING STRUCTURES.

5. SPECIAL INSPECTION (OWNER FURNISHED) IS REQUIRED IN ACCORDANCE WITH CBC CHAPTER 17 ON THE FOLLOWING PORTIONS OF THE WORK.
   CONCRETE PLACEMENT
   REINFORCING STEEL PLACEMENT
   MASONRY PLACEMENT
   STRUCTURAL WELDING
   ANCHORS, EMBEDS AND BOLTS INSTALLED IN CONCRETE
   GRADING, EXCAVATION, AND BACKFILLING

FOUNDATIONS:

1. FOUNDATION DESIGN IS BASED ON GEOTECHNICAL INVESTIGATION REPORT PREPARED BY NINYO & MOORE PROJECT NO. 205715002 DATED AUGUST 19, 2005.

2. IT IS THE RESPONSIBILITY OF THE CONTRACTOR TO FAMILIIARIZE WITH THE GEOTECHNICAL REPORT REGARDING THE NATURE OF THE SOILS THAT MAY BE ENCOUNTERED DURING THE COURSE OF THE FOUNDATION AND SITE WORK.

3. ALL EARTHWORK INCLUDING EXCAVATION, OVER-EXCAVATION AND BACKFILL, ETC., SHALL BE PERFORMED IN ACCORDANCE WITH THE SAID GEOTECHNICAL REPORT.

4. FOUNDATION EXCAVATION SHALL BE INSPECTED BY THE PROJECT GEOTECHNICAL ENGINEER DURING EXCAVATION AND PRIOR TO PLACEMENT OF REINFORCING STEEL OR CONCRETE.

5. THE PROJECT GEOTECHNICAL ENGINEER DURING CONSTRUCTION, SHALL EVALUATE THE DEPTH AND LATERAL EXTENT OF EXCAVATIONS FOR FOOTINGS AND SLABS.

6. NO BACKFILL SHALL BE PLACED BEHIND WALLS UNTIL THE CONCRETE HAS ATTAINED THE SPECIFIED COMPRESSIVE STRENGTH.

7. EXCAVATIONS SHALL BE SHORED AS REQUIRED TO PREVENT SUBSIDENCE OF DAMAGE TO ADJACENT EXISTING STRUCTURES. STREETS, UTILITIES, ETC.

FRAMEWORK, SHORING AND BRACING:

1. CONSTRUCTION SHORING AND BRACING OF FORMWORK SHALL BE IN ACCORDANCE WITH CHAPTER 4 OF ACI 301 "SPECIFICATIONS FOR STRUCTURAL CONCRETE FOR BUILDINGS" AND ACI 347 "RECOMMENDED PRACTICE FOR CONCRETE FORMWORK".

2. STRUCTURES HAVE BEEN DESIGNED FOR OPERATIONAL LOADS ON THE COMPLETED STRUCTURES. CONTRACTOR IS RESPONSIBLE FOR ALL WORK RELATING TO CONSTRUCTION ERECTION METHODS, BRACING, SHORING, RIGGING, GUYS, SCAFFOLDING, FORMWORK, AND OTHER WORK REQUIRED TO SAFELY PERFORM THE WORK.

3. WALLS TIED TO ELEVATED FLOOR OR ROOF SLABS SHALL BE BRACED AND REMOVAL OF BRACING FOLLOWED BY BACKFILLING SHALL NOT BE ALLOWED UNTIL THE SLAB IS COMPLETE AND HAS ATTAINED 100% OF ITS SPECIFIED COMPRESSIVE STRENGTH AND ALL ROOF AND FLOOR DECKING IS IN PLACE AND WELDED.

4. TEMPORARY SHORING SHALL REMAIN IN PLACE UNTIL ELEVATED CONCRETE FLOOR OR ROOF DECKS HAVE REACHED 28-DAY DESIGN STRENGTH AS DETERMINED BY CYLINDER BREAKS.

CONCRETE:

1. ALL CAST-IN-PLACE CONCRETE SHALL HAVE A MINIMUM 28 DAY COMPRESSIVE STRENGTH OF 4500 PSI, EXCEPT 3000 PSI FOR SECONDARY CONCRETE ELEMENTS SUCH AS CURBS, SIDEWALKS, AND PIPE/CONDUIT ENCASEMENTS.

2. CONSTRUCTION JOINTS INDICATED ARE SUGGESTED LOCATIONS. CONTRACTOR MAY REVISE LOCATION OF JOINTS, SUBJECT TO SPECIFIED REQUIREMENTS, AND SHALL SUBMIT ALL JOINT LOCATIONS FOR REVIEW BY THE ENGINEER. ADDITIONAL CONSTRUCTION JOINT LOCATIONS, AS REQUIRED FOR CONSTRUCTION, SHALL BE SUBMITTED FOR REVIEW.

3. CONTINUOUS WATERSTOPS, AS SPECIFIED, SHALL BE INSTALLED IN ALL CONSTRUCTION JOINTS IN WALLS OF WATER HOLDING STRUCTURES, CHANNELS, AND BELOW GRADE STRUCTURES, EXCEPT WHERE SPECIFICALLY NOTED OTHERWISE.

4. ROUGHEN AND CLEAN ALL CONSTRUCTION JOINTS IN WALLS AND SLABS AS SPECIFIED PRIOR TO PLACING ADJACENT CONCRETE. SANDBLASTING OR OTHER PREPARATION OF HORIZONTAL AND VERTICAL JOINTS IS REQUIRED.

5. THE CONTRACTOR SHALL COORDINATE PLACEMENT OF ALL OPENINGS, CURBS, DOWELS SLEEVES, CONDUITS, BOLTS AND INSERTS PRIOR TO PLACEMENT OF CONCRETE.

6. MECHANICAL AND ELECTRICAL EQUIPMENT SUPPORTS, ANCHORAGES, OPENINGS, RECESSES, AND REVEALS NOT SHOWN ON THE STRUCTURAL DRAWINGS BUT REQUIRED BY OTHER CONTRACT DRAWINGS, SHALL BE PROVIDED FOR PRIOR TO PLACING CONCRETE.

4. FOR PIPE PENETRATIONS NOT SHOWN SEE MECHANICAL DRAWINGS.

8. NO ALUMINUM CONDUIT OR PRODUCTS CONTAINING ALUMINUM OR ANY OTHER MATERIAL INJURIOUS TO THE CONCRETE SHALL BE EMBEDDED IN THE CONCRETE.

METAL DECK:

1. METAL ROOF DECK SHALL BE GALVANIZED DECK 1½"X 18" GA. TYPE HSB-36 AS MANUFACTURED BY VERCO MANUFACTURING COMPANY OR APPROVED EQUAL FOR VERTICAL AND LATERAL LOAD.

2. WELDING SHALL BE DONE IN ACCORDANCE WITH AWS D1.3 "STRUCTURAL WELDING CODE - SHEET STEEL". WELDING FILLER MATERIAL SHALL BE AWS A5.1 OR A5.5 E70XX ELECTRODES. WELDERS SHALL BE AWS CERTIFIED.

3. ROOF DECK SHEETS SHALL BE FASTENED TO THE SUPPORTING ROOF STEEL BY ½" DIAMETER PUDDLE WELDS AS FOLLOWS:
   WELD PER SHEET TO SUPPORT: 7
   SIDE SEAM WELD: 2'-0" ON CENTERS
   PARALLEL EDGE: 12" ON CENTERS

4. DECKING SHALL HAVE MINIMUM 2" BEARING ON ALL SUPPORTS.

5. DECKING SHALL BE CONTINUOUS OVER 2 SPANS MINIMUM, EXCEPT WHERE SHOWN OTHERWISE.

6. THE DECK SHALL BE REINFORCED AT OPENINGS PER MANUFACTURER'S REQUIREMENTS.

CONCRETE REINFORCING:

1. REINFORCING STEEL SHALL CONFORM TO ASTM A615, GRADE 60. REINFORCING TO BE WELDED SHALL CONFORM TO ASTM A706 GRADE 60. FABRICATION AND PLACEMENT OF REINFORCING STEEL SHALL BE IN ACCORDANCE WITH CRSI MSP-1 "MANUAL OF STANDARD PRACTICE" AND ACI 301 "SPECIFICATIONS FOR STRUCTURAL, CONCRETE FOR BUILDING".

2. CLEARANCE FOR REINFORCEMENT BARS, UNLESS SHOWN OTHERWISE, SHALL BE
   A. WHEN PLACED ON GROUND: ---3"
   B. ALL OTHER CONCRETE SURFACES:
      #5 BAR OR SMALLER ----2"
      #6 BAR OR LARGER -----2"

3. REFER TO WALL CORNER AND WALL INTERSECTION REINFORCING DETAILS.

4. ALL BENDS, UNLESS OTHERWISE SHOWN, SHALL BE A 90 DEGREE STANDARD HOOK AS DEFINED IN LATEST EDITION OF ACI 318.

5. ALL WALL CORNER AND WALL INTERSECTION REINFORCEMENT BARS SHALL BE CONTINUOUS AROUND CORNERS AND THROUGH COLUMNS OR PILASTERS.

METAL FABRICATIONS:

1. ALL STRUCTURAL STEEL SHALL CONFORM TO ASTM A-36 UNLESS SHOWN OTHERWISE. SQUARE OR RECTANGULAR STEEL TUBING SHALL CONFORM TO ASTM A-500, GRADE B. STEEL PIPE SHALL BE A501 OR ASTM A53, GRADE B.

2. ALL STRUCTURAL STEEL SHALL BE FABRICATED AND ERECTED IN CONFORMANCE WITH THE AISC MANUAL OF STEEL CONSTRUCTION, CURRENT EDITION.

3. ALL BOLTS SHALL BE HIGH STRENGTH BOLTS CONFORMING TO ASTM A325-N (OR A325-SC WHERE INDICATED) UNLESS OTHERWISE SHOWN. BOLTS INDICATED AS MACHINE BOLTS (MB) OR ANCHOR BOLTS (AB) SHALL CONFORM TO ASTM A307 FOR CARBON STEEL, A193 FOR STAINLESS STEEL, AND A153 FOR GALVANIZED STEEL EXCEPT WHERE SPECIFICALLY INDICATED OTHERWISE. ALL JOINT CONTACT SURFACES SHALL BE CLEAN AND FREE FROM OIL, DIRT AND PAINT.

4. ALL WELDS SHALL BE DONE BY AWS CERTIFIED WELDERS AND SHALL CONFORM TO AWS D 1.1, LATEST EDITION. ALL BUTT WELDS ARE COMPLETE PENETRATION UNLESS INDICATED OTHERWISE. WELD FILLER METAL SHALL BE AWS A5.1 OR A5.5 E70XX ELECTRODES.

5. ALL WELDS FOUND DEFECTIVE SHALL BE REPAIRED AND/OR REPLACED AND RETESTED FOR ADEQUACY AT THE CONTRACTOR'S EXPENSE.

6. AT ALL FIELD WELDS, AT EMBED PLATES, AND ANGLES, LOW HEAT AND INTERMITTENT WELDS SHALL BE UTILITIZED TO AVOID SPALLING OR CRACKING THE EXISTING CONCRETE.

7. ALL STRUCTURAL STEEL, TO BE EMBEDDED IN CONCRETE SHALL BE CLEAN AND FREE OF PAINT, OIL OR DIRT.

8. NO HOLES OTHER THAN THOSE SPECIFICALLY DETAILED SHALL BE ALLOWED THROUGH STRUCTURAL STEEL MEMBERS. NO CUTTING OR BURNING OF STRUCTURAL STEEL WILL BE PERMITTED WITHOUT APPROVAL OF THE ENGINEER.

COUNTY OF ORANGE CALIFORNIA

MARK	DESCRIPTION	DATE	APPR.

PREPARED UNDER THE RESPONSIBLE CHARGE OF:

REGISTERED PROFESSIONAL ENGINEER RONALD W. WONG No. S3896 Exp. 3/31/11 STRUCTURAL STATE OF CALIFORNIA

DATE

DESIGNED BY:
DRAWN BY: CADD
CHECKED BY: JOHN LOAGUE
DRAWING CODE: F06-101-7
FILE NAME:
PLOT DATE: $DATE$
SCALE: AS SHOWN

OC PUBLIC WORKS

PREPARED BY: AKM CONSULTING ENGINEERS

HASTER RETARDING BASIN (C05802) PUMP STATION

STRUCTURAL NOTES

Sheet Reference Number

S-1

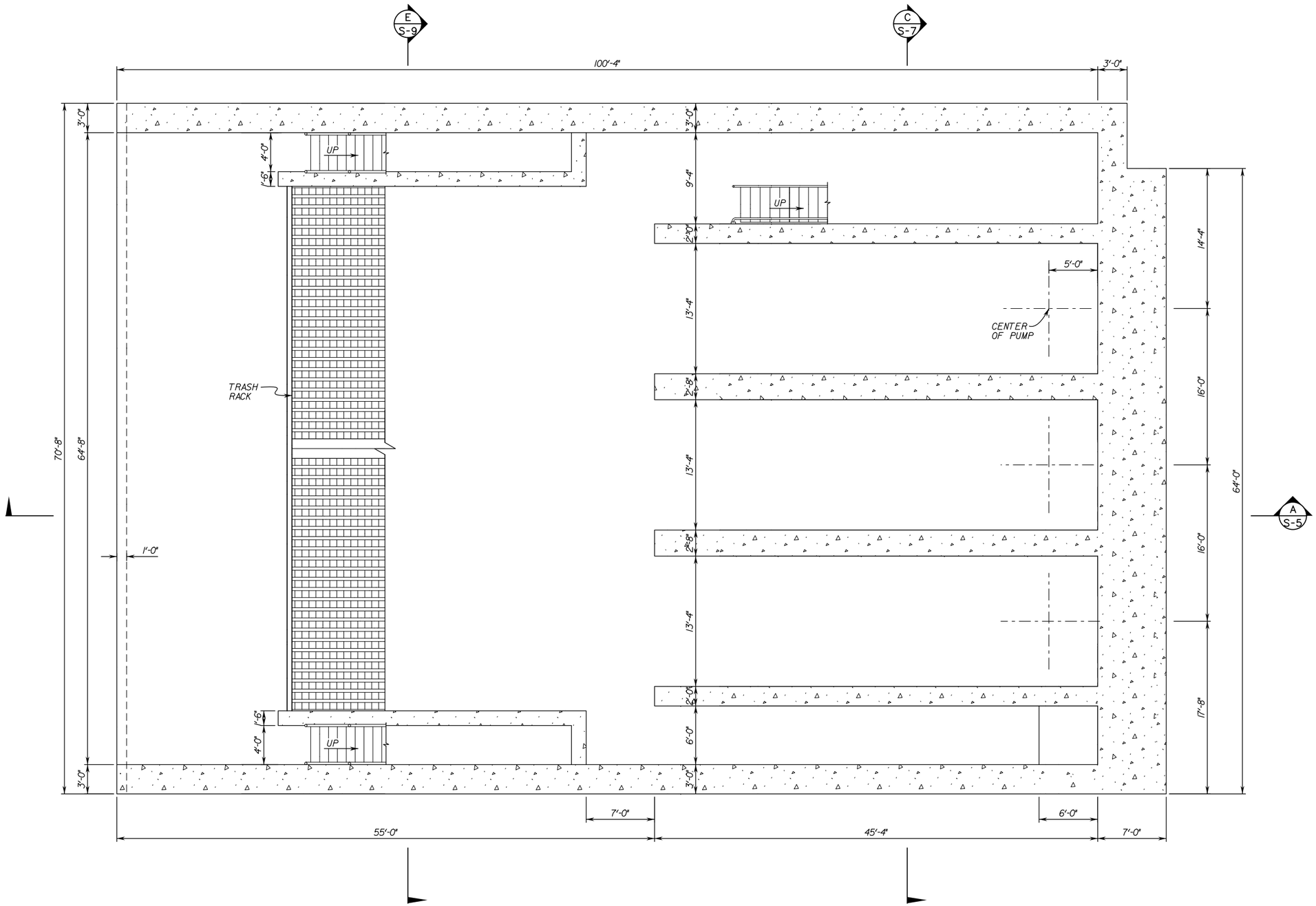

SUMP FLOOR PLAN

SCALE: 3/16" = 1'-0"

COUNTY OF ORANGE CALIFORNIA

MARK	DESCRIPTION	DATE	APPR.

PREPARED UNDER THE RESPONSIBLE CHARGE OF:

REGISTERED PROFESSIONAL ENGINEER RONALD W. WONG No. S3886 Exp. 3/31/11 STRUCTURAL STATE OF CALIFORNIA

DATE

DESIGNED BY:

DRAWN BY: CADD

CHECKED BY: JOHN LOAGUE

DRAWING CODE: F06-101-7

FILE NAME:

PLOT DATE: $DATE$

SCALE: AS SHOWN

OC PUBLIC WORKS

PREPARED BY: AKM CONSULTING ENGINEERS

HASTER RETARDING BASIN (C05B02) PUMP STATION

SUMP FLOOR PLAN

Sheet Reference Number

S-2

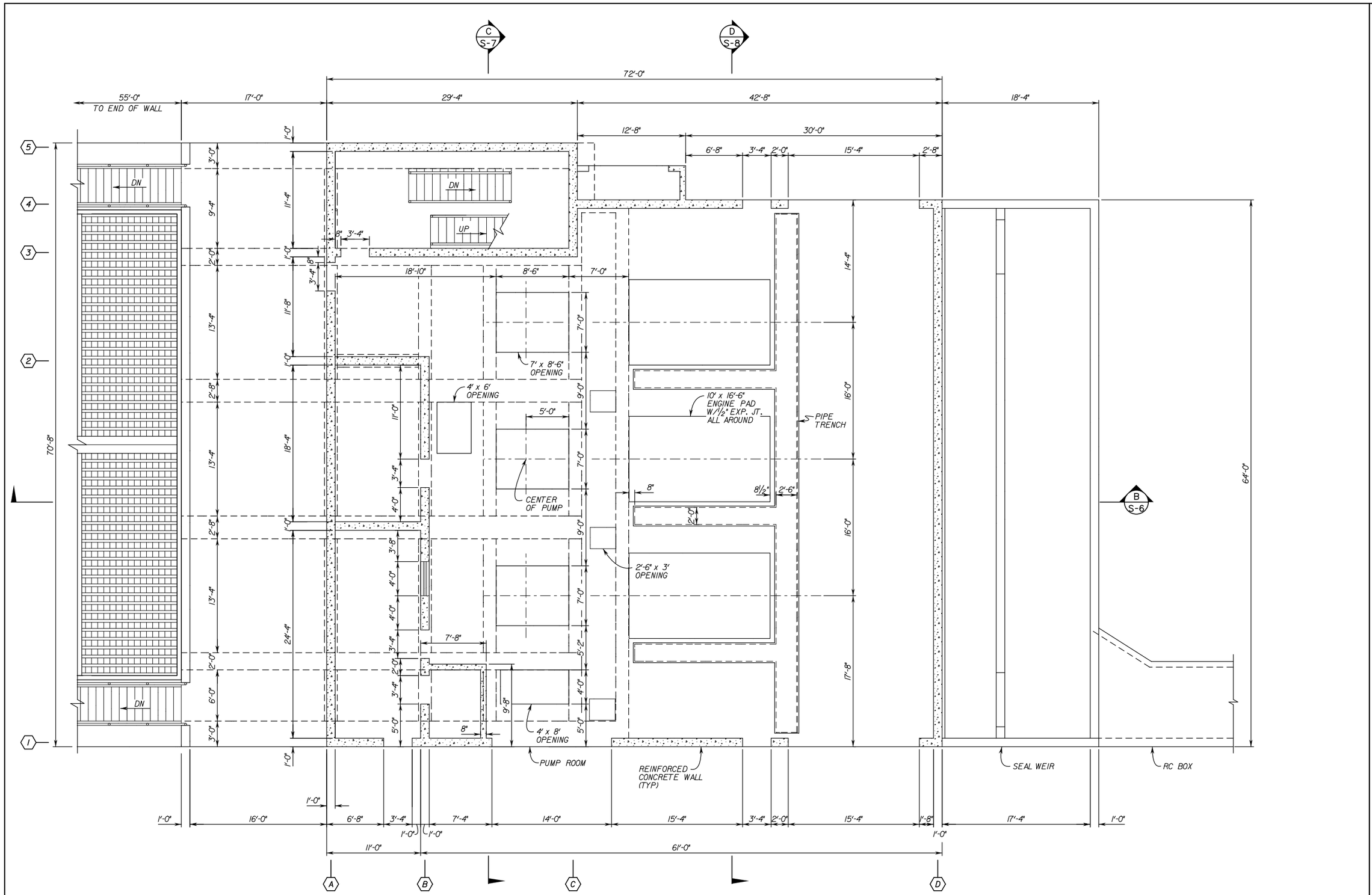

BUILDING FLOOR PLAN

SCALE: 3/16" = 1'-0"

COUNTY OF ORANGE CALIFORNIA

MARK	DESCRIPTION	DATE	APPR.

PREPARED UNDER THE RESPONSIBLE CHARGE OF:

REGISTERED PROFESSIONAL ENGINEER RONALD W. WONG No. S3896 Exp. 3/31/11 STRUCTURAL STATE OF CALIFORNIA

DATE

DESIGNED BY:

DRAWN BY: CADD

CHECKED BY: JOHN LOAGUE

DRAWING CODE: F06-101-7

FILE NAME:

PLOT DATE: $DATE$

SCALE: AS SHOWN

OC PUBLIC WORKS

PREPARED BY: AKM CONSULTING ENGINEERS

HASTER RETARDING BASIN (C05B02) PUMP STATION

BUILDING FLOOR PLAN

Sheet Reference Number

S-3

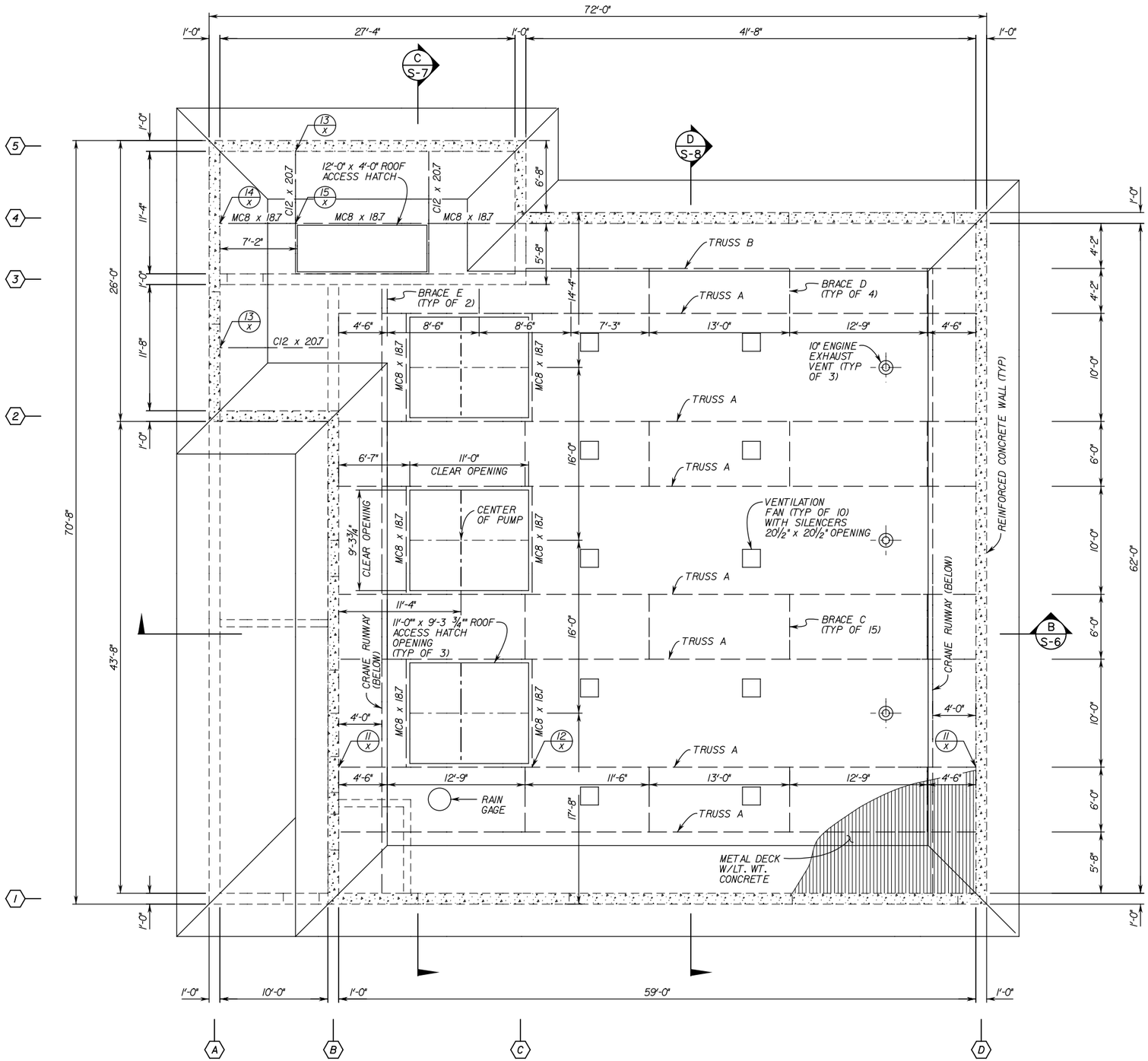

ROOF FRAMING PLAN

SCALE: 3/16" = 1'-0"

COUNTY OF ORANGE CALIFORNIA

MARK	DESCRIPTION	DATE	APPR.

PREPARED UNDER THE RESPONSIBLE CHARGE OF:

REGISTERED PROFESSIONAL ENGINEER RONALD W. WONG No. S3896 Exp. 3/31/11 STRUCTURAL STATE OF CALIFORNIA

DATE

DESIGNED BY:

DRAWN BY: CADD

CHECKED BY: JOHN LOAGUE

DRAWING CODE: F06-101-7

FILE NAME: -

PLOT DATE: $DATE$

SCALE: AS SHOWN

OC PUBLIC WORKS

PREPARED BY: AKM CONSULTING ENGINEERS

HASTER RETARDING BASIN (C05B02) PUMP STATION

ROOF FRAMING PLAN

Sheet Reference Number

S-4

Sheet 61 of 104

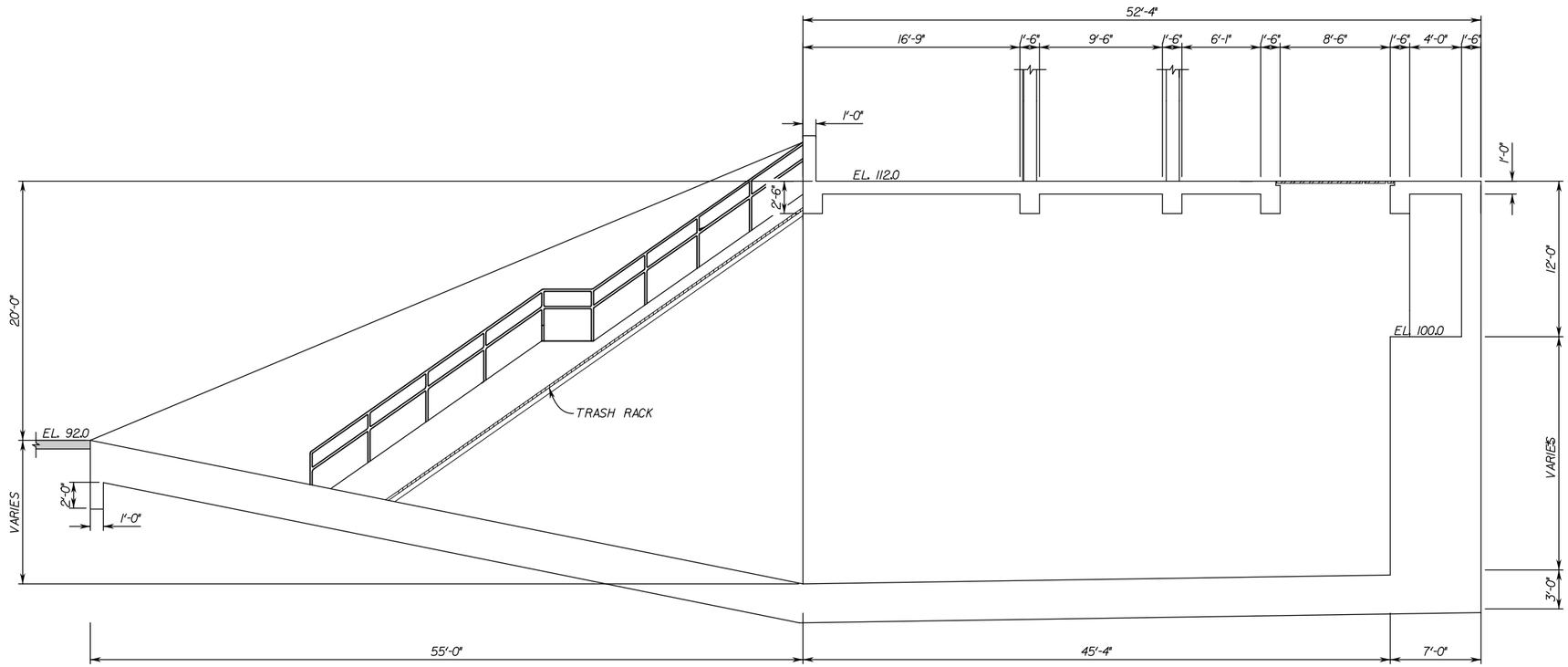

SECTION A S-2
SCALE: 3/16" = 1'-0"

COUNTY OF ORANGE CALIFORNIA

MARK	DESCRIPTION	DATE	APPR.

PREPARED UNDER THE RESPONSIBLE CHARGE OF:

REGISTERED PROFESSIONAL ENGINEER RONALD W. WONG No. S3886 Exp. 3/31/11 STRUCTURAL STATE OF CALIFORNIA

DATE

DESIGNED BY:

DRAWN BY: CADD

CHECKED BY: JOHN LOAGUE

DRAWING CODE: F06-101-7

FILE NAME: -

PLOT DATE: $DATE$

SCALE: AS SHOWN

OC PUBLIC WORKS

PREPARED BY: AKM CONSULTING ENGINEERS

HASTER RETARDING BASIN (C05B02) PUMP STATION

PUMP ROOM SECTION A

Sheet Reference Number

S-5

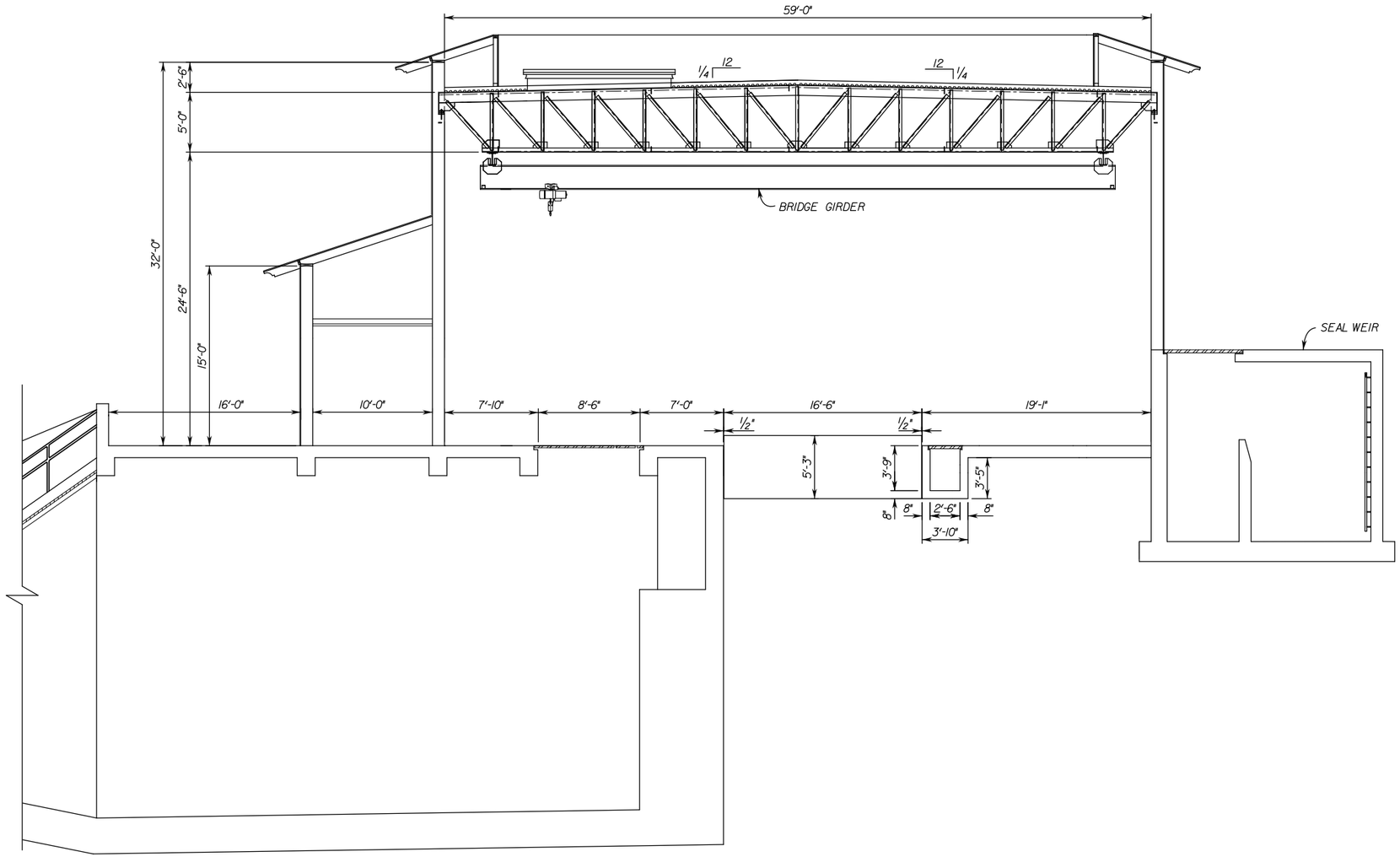

SECTION B S-3, S-4
SCALE: 3/16" = 1'-0"

COUNTY OF ORANGE CALIFORNIA

MARK	DESCRIPTION	DATE	APPR.

PREPARED UNDER THE RESPONSIBLE CHARGE OF:

REGISTERED PROFESSIONAL ENGINEER FONG-LD W. WONG No. S3896 Exp. 3/31/11 STRUCTURAL STATE OF CALIFORNIA

DATE

DESIGNED BY:
DRAWN BY: CADD
CHECKED BY: JOHN LOAGUE
DRAWING CODE: F06-101-7
FILE NAME: -
PLOT DATE: $DATE$
SCALE: AS SHOWN

OC PUBLIC WORKS

PREPARED BY: AKM CONSULTING ENGINEERS

HASTER RETARDING BASIN (C05802) PUMP STATION

PUMP ROOM SECTIONS B

Sheet Reference Number

S-6

Sheet 63 of 104

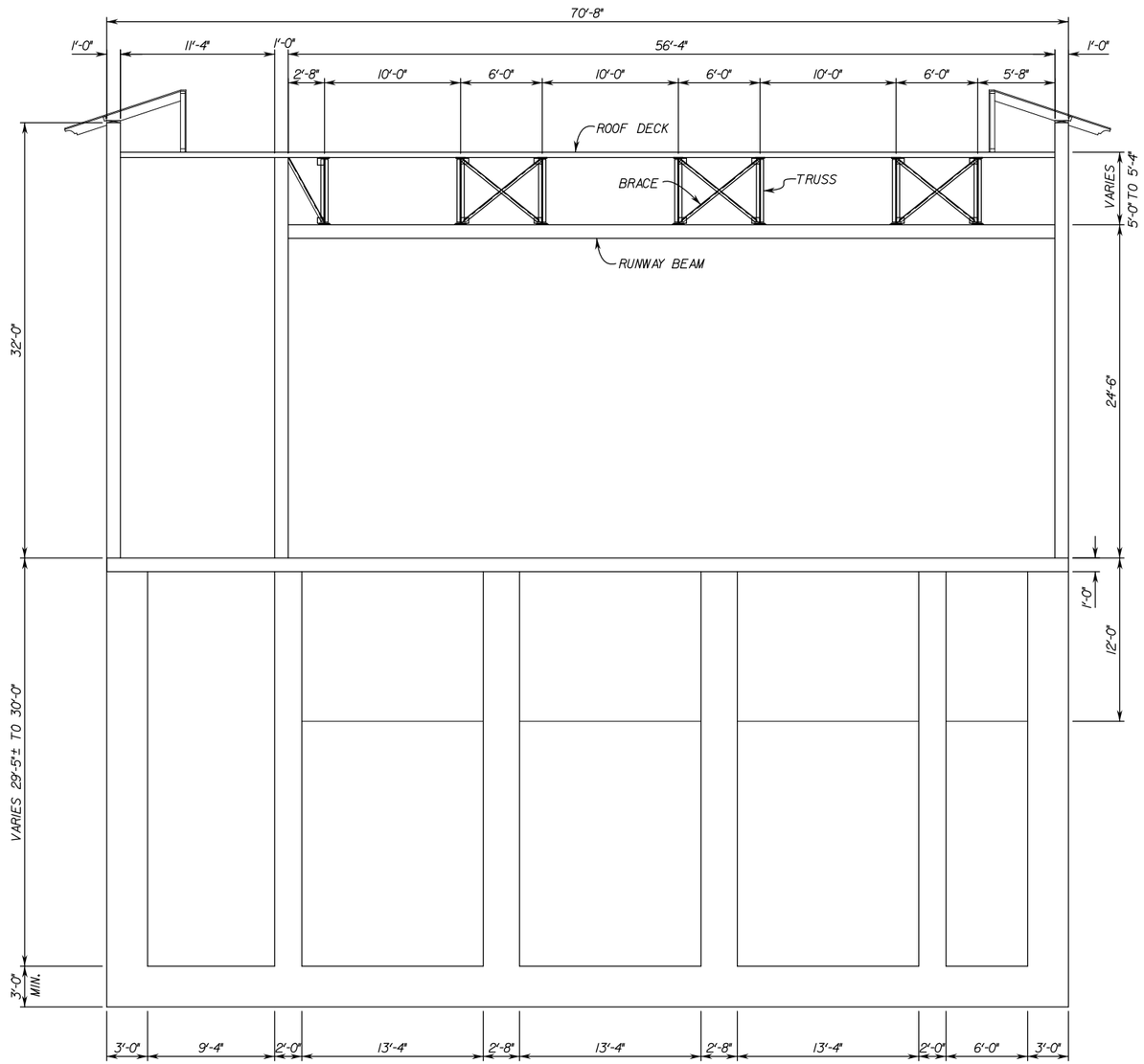

SECTION C
SCALE: 3/16" = 1'-0"
S-2, S-3, S-4

COUNTY OF ORANGE CALIFORNIA

MARK	DESCRIPTION	DATE	APPR.

PREPARED UNDER THE RESPONSIBLE CHARGE OF:

REGISTERED PROFESSIONAL ENGINEER RONALD W. WONG No. S3896 Exp. 3/31/11 STRUCTURAL STATE OF CALIFORNIA

DATE

DESIGNED BY:

DRAWN BY: CADD

CHECKED BY: JOHN LOAGUE

DRAWING CODE: F06-101-7

FILE NAME: -

PLOT DATE: $DATE$

SCALE: AS SHOWN

OC PUBLIC WORKS

PREPARED BY: AKM CONSULTING ENGINEERS

HASTER RETARDING BASIN (C05B02) PUMP STATION

PUMP ROOM SECTION C

Sheet Reference Number

S-7

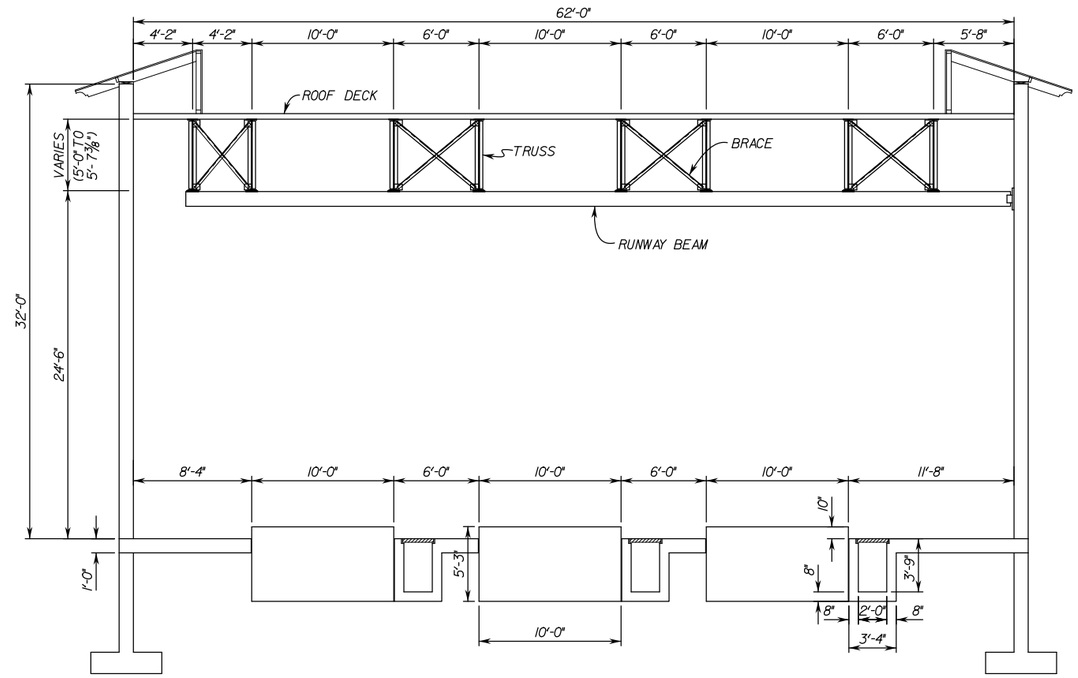

SECTION D S-3, S-4

SCALE: 3/16" = 1'-0"

COUNTY OF ORANGE CALIFORNIA

MARK	DESCRIPTION	DATE	APPR.

PREPARED UNDER THE RESPONSIBLE CHARGE OF:

REGISTERED PROFESSIONAL ENGINEER RONALD W. WONG No. S3886 Exp. 3/31/11 STRUCTURAL STATE OF CALIFORNIA

DATE

DESIGNED BY:

DRAWN BY: CADD

CHECKED BY: JOHN LOAGUE

DRAWING CODE: F06-101-7

FILE NAME: -

PLOT DATE: $DATE$

SCALE: AS SHOWN

OC PUBLIC WORKS

PREPARED BY: AGM CONSULTING ENGINEERS

HASTER RETARDING BASIN (C05B02) PUMP STATION

PUMP ROOM SECTION D

Sheet Reference Number

S-8

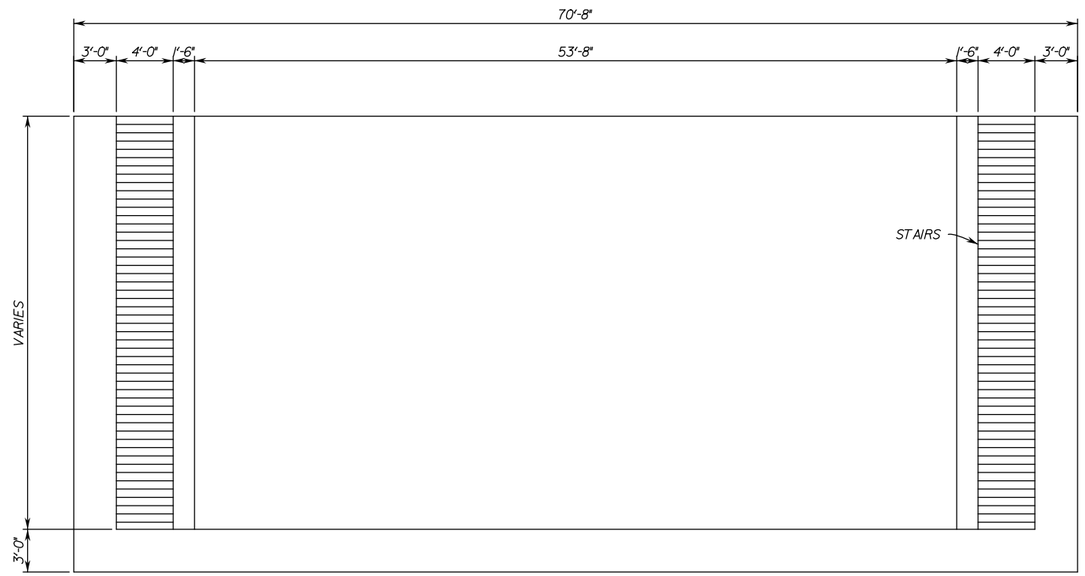

SECTION E / S-2

SCALE: 3/16" = 1'-0"

COUNTY OF ORANGE CALIFORNIA

MARK	DESCRIPTION	DATE	APPR.

PREPARED UNDER THE RESPONSIBLE CHARGE OF:

REGISTERED PROFESSIONAL ENGINEER RONALD W. WONG No. S3886 Exp. 3/31/11 STRUCTURAL STATE OF CALIFORNIA

DATE

DESIGNED BY:

DRAWN BY: CADD

CHECKED BY: JOHN LOAGUE

DRAWING CODE: F06-101-7

FILE NAME: -

PLOT DATE: $DATE$

SCALE: AS SHOWN

OC PUBLIC WORKS

PREPARED BY: AKM CONSULTING ENGINEERS

HASTER RETARDING BASIN (C05B02) PUMP STATION

STRUCTURAL SECTION E

Sheet Reference Number

S-9

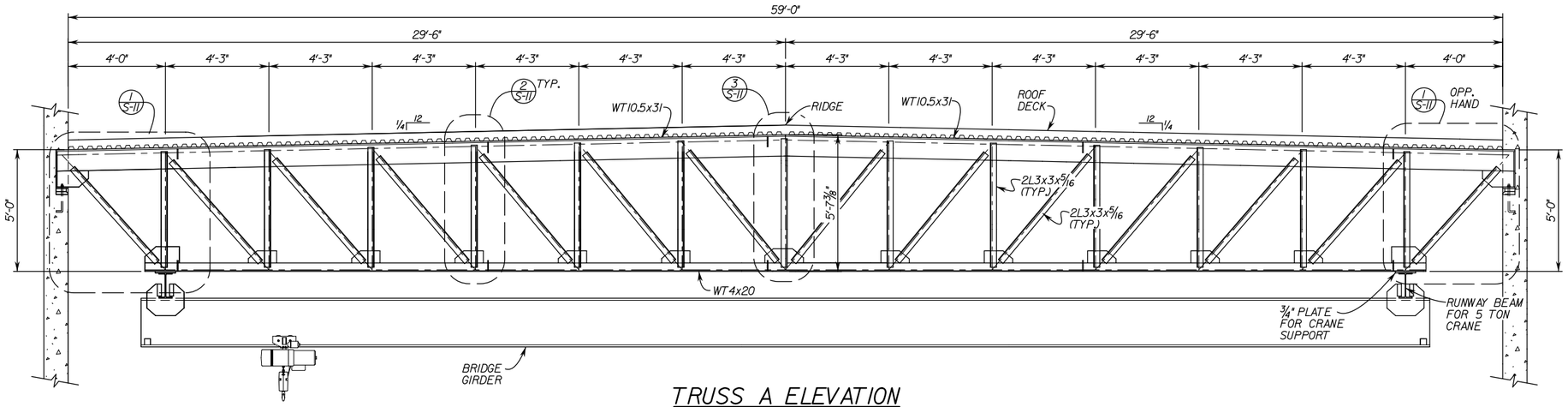

TRUSS A ELEVATION

SCALE: 3/8" = 1'-0"

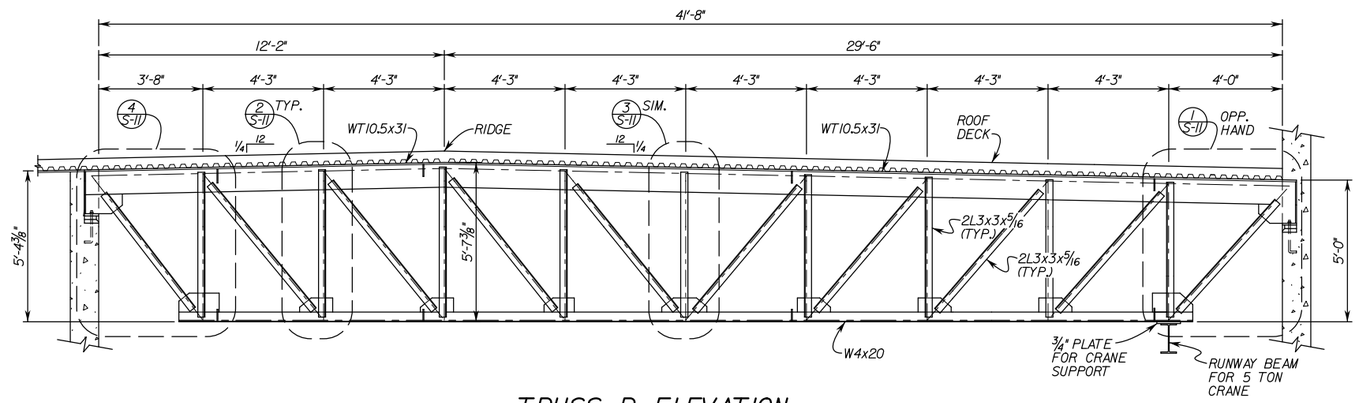

TRUSS B ELEVATION

SCALE: 3/8" = 1'-0"

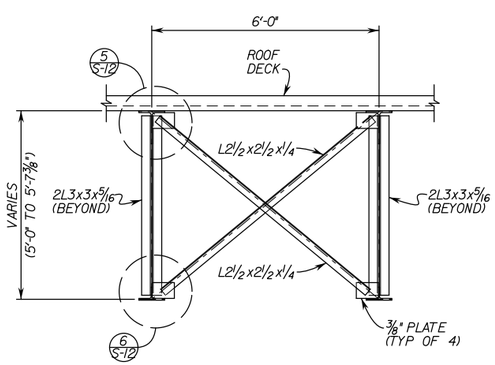

BRACE C ELEVATION

SCALE: 1/2" = 1'-0"

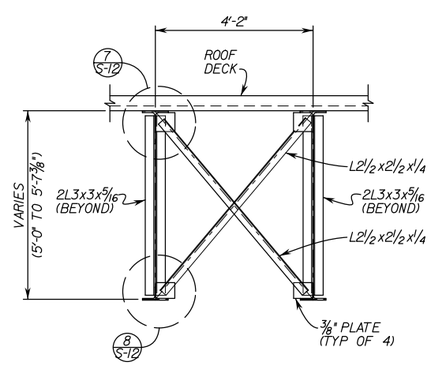

BRACE D ELEVATION

SCALE: 1/2" = 1'-0"

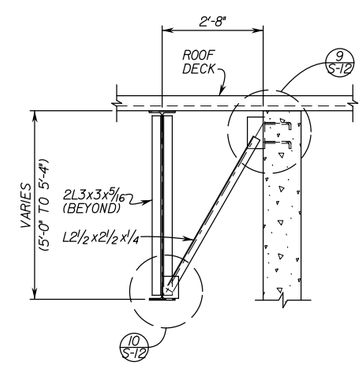

BRACE E ELEVATION

SCALE: 1/2" = 1'-0"

COUNTY OF ORANGE CALIFORNIA

MARK	DESCRIPTION	DATE	APPR.

PREPARED UNDER THE RESPONSIBLE CHARGE OF:

REGISTERED PROFESSIONAL ENGINEER RONALD W. WONG No. S3886 Exp. 3/31/11 STRUCTURAL STATE OF CALIFORNIA

DATE

DESIGNED BY:

DRAWN BY: CADD

CHECKED BY: JOHN LOAGUE

DRAWING CODE: F06-101-7

FILE NAME: -

PLOT DATE: $DATE$

SCALE: AS SHOWN

OC PUBLIC WORKS

PREPARED BY: AKM CONSULTING ENGINEERS

HASTER RETARDING BASIN (C05B02) PUMP STATION

BUILDING TRUSS ELEVATIONS

Sheet Reference Number

S-10

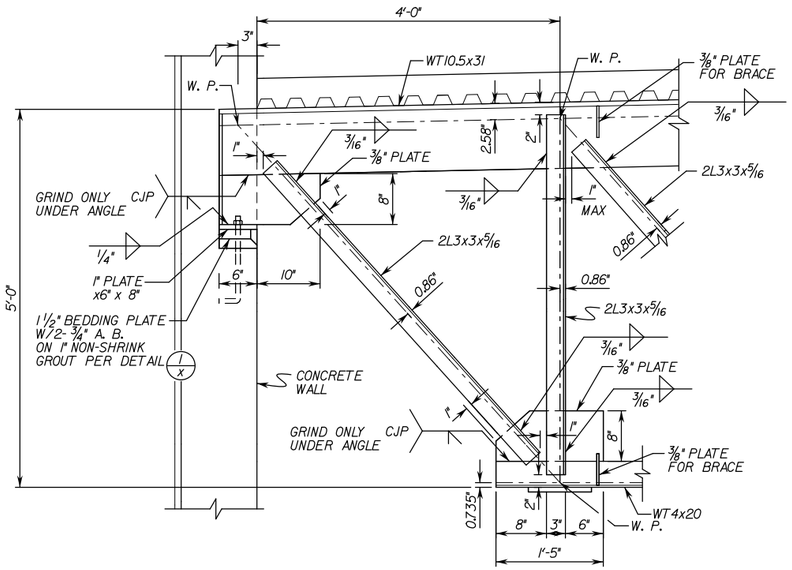

DETAIL 1 / S-10
SCALE: 1" = 1'-0"

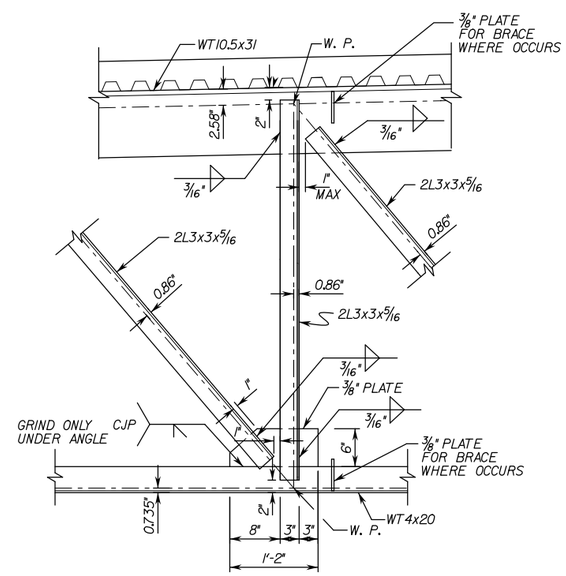

DETAIL 2 / S-10
SCALE: 1" = 1'-0"

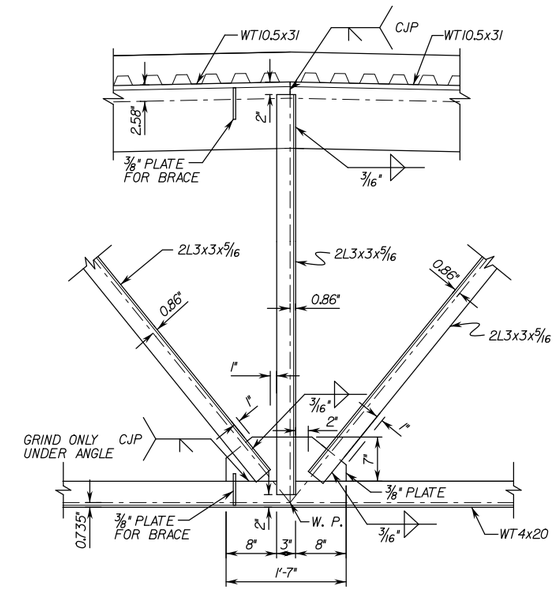

DETAIL 3 / S-10
SCALE: 1" = 1'-0"

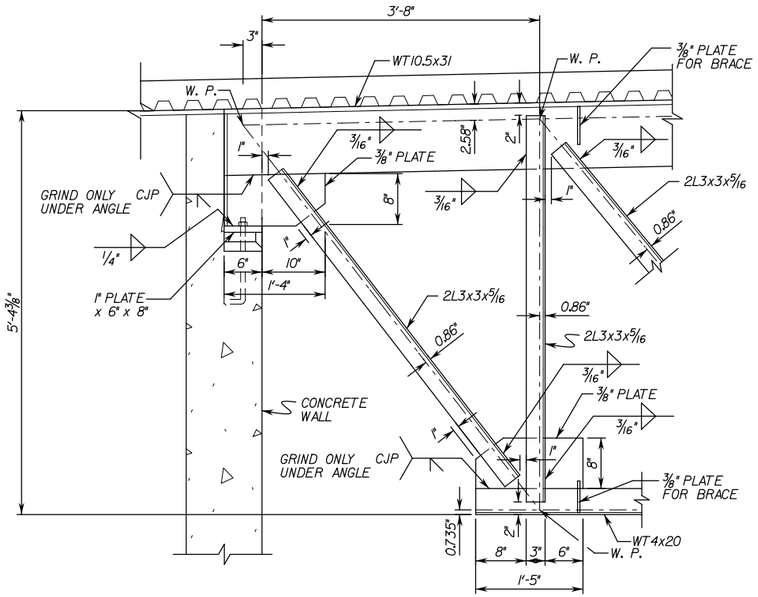

DETAIL 4 / S-10
SCALE: 1" = 1'-0"

COUNTY OF ORANGE CALIFORNIA

MARK	DESCRIPTION	DATE	APPR.

PREPARED UNDER THE RESPONSIBLE CHARGE OF:

REGISTERED PROFESSIONAL ENGINEER RONALD W. WONG No. S3896 Exp. 3/31/11 STRUCTURAL STATE OF CALIFORNIA

DATE

DESIGNED BY:
DRAWN BY: CADD
CHECKED BY: JOHN LOAGUE
DRAWING CODE: F06-101-7
FILE NAME: -
PLOT DATE: $DATE$
SCALE: AS SHOWN

OC PUBLIC WORKS

PREPARED BY: AKM CONSULTING ENGINEERS

HASTER RETARDING BASIN (C05802) PUMP STATION

DETAILS 1

Sheet Reference Number

S-11

$FILE$

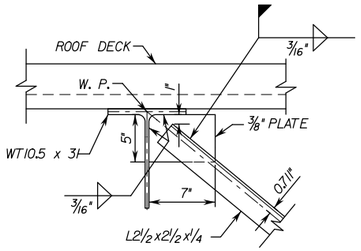

DETAIL 5 / S-10
SCALE: 1 1/2" = 1'-0"

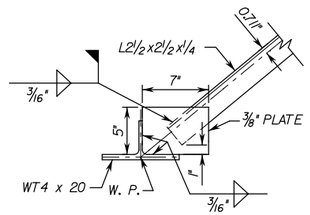

DETAIL 6 / S-10
SCALE: 1 1/2" = 1'-0"

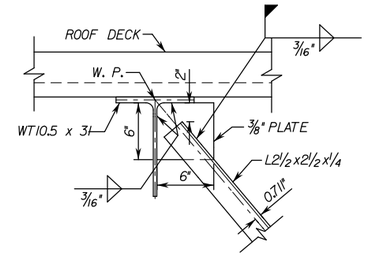

DETAIL 7 / S-10
SCALE: 1 1/2" = 1'-0"

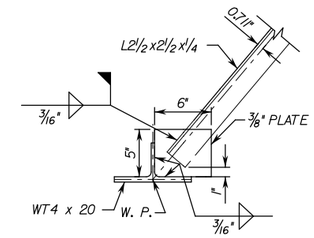

DETAIL 8 / S-10
SCALE: 1 1/2" = 1'-0"

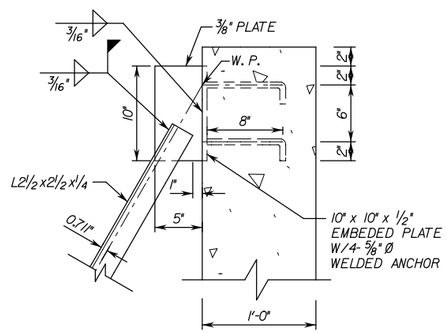

DETAIL 9 / S-10
SCALE: 1 1/2" = 1'-0"

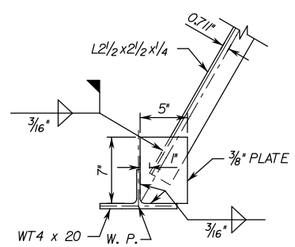

DETAIL 10 / S-10
SCALE: 1 1/2" = 1'-0"

COUNTY OF ORANGE CALIFORNIA

MARK	DESCRIPTION	DATE	APPR.

PREPARED UNDER THE RESPONSIBLE CHARGE OF:

REGISTERED PROFESSIONAL ENGINEER KONG W. WONG No. S3886 Exp. 3/31/11 STRUCTURAL STATE OF CALIFORNIA

DATE

DESIGNED BY:
DRAWN BY: CADD
CHECKED BY: JOHN LOAGUE
DRAWING CODE: F06-101-7
FILE NAME:
PLOT DATE: $DATE$
SCALE: AS SHOWN

OC PUBLIC WORKS

PREPARED BY: AKM CONSULTING ENGINEERS

HASTER RETARDING BASIN (C05B02) PUMP STATION

DETAILS

Sheet Reference Number

S–12

$FILE$

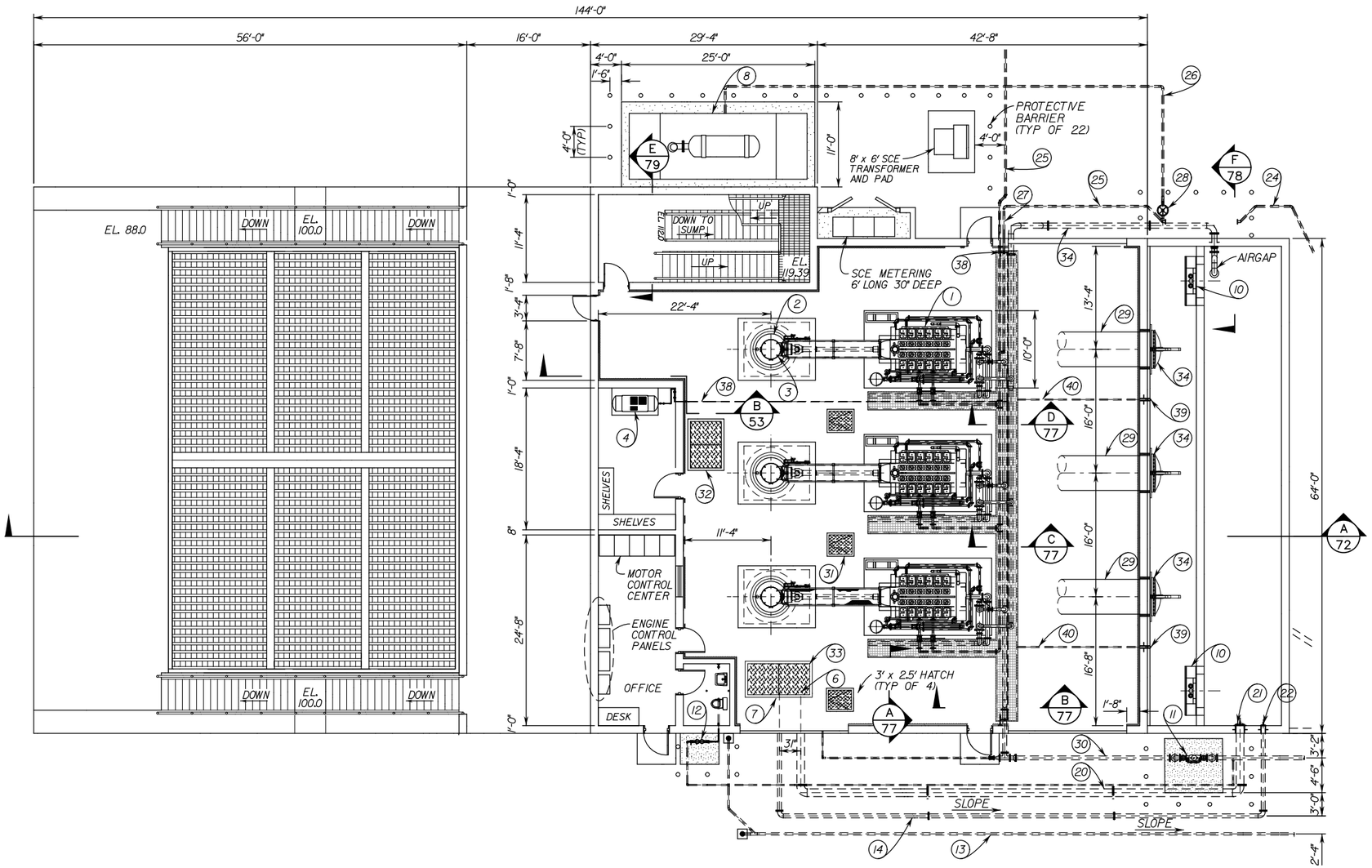

BUILDING MECHANICAL PLAN (TOP FLOOR)

SCALE: 1/8" = 1'-0"

LIST OF MATERIALS

ITEM	DESCRIPTION	SIZE	QTY
1	NATURAL GAS ENGINE, WAUKESHA 5790 G	--	3
2	PROPELLER PUMP, JOHNSTON 48 PO 54" DISCHARGE	54"	3
3	RIGHT ANGLE GEAR DRIVE WATER COOLED, AMARILLO SL 1500 3: 1 RATIO	--	3
4	AIR COMPRESSOR, ATLAS COPCO GAI-100T AFF	--	1
5	-	-	-
6	SUMP PUMP, WEMCO 8 x 6 x 17L 3000 GPM AT 17' TDH	6"	1
7	SUMP PUMP, WEMCO 6 x 11M 500 GPM AT 29' TDH	6"	1
8	GENERATOR, CATERPILLAR G3412 350 KW @ 60 Hz	--	1
9	SLUCE GATE, MANUAL OPERATOR	54"	1
10	SLUCE GATE, MOTOR OPERATOR	54"	2
11	REDUCED PRESSURE BACKFLOW DEVICE, FEBCO MASTER SERIES 880 V WITH VALVE SETTER	6"	1
12	REDUCED PRESSURE BACKFLOW DEVICE, FEBCO MASTER SERIES	2"	1
13	SEWER PIPE, PVC DRAINAGE WASTE AND VENT	4"	--
14	SCHEDULE 40S 316 STAINLESS STEEL PIPE	6"	--
15	125# FLANGED NON RISING STEM RESILIENT WEDGE GATE VALVE WITH 2" OPERATING NUT	6"	1
16	125# FLANGED NON RISING STEM RESILIENT WEDGE GATE VALVE WITH 2" OPERATING NUT	12"	1
17	125# FLANGED NON RISING STEM RESILIENT WEDGE GATE VALVE WITH 2" OPERATING NUT	4"	1
18	DUCTILE IRON TEE FLANGED	6"	1
19	DUCTILE IRON REDUCER FLANGED	6" x 4"	1
20	SCHEDULE 40S 316 STAINLESS STEEL PIPE	12"	--
21	FLAP GATE WATERMAIN F-55	12"	1
22	FLAP GATE WATERMAIN F-55	6"	1
23	FLAP GATE WATERMAIN F-55	8"	1
24	GAS CO. SERVICE	--	--
25	SCH 80 SEAMLESS PIPE COATED PER SPEC	4"	--
26	SCH 80 SEAMLESS PIPE COATED PER SPEC	2 1/2"	--
27	SCH 80 SEAMLESS PIPE COATED PER SPEC	3"	--
28	FISHER SERIES 99 GAS REGULATOR SET AT 1 P.S.I.	2"	1
29	PIPE CML&C 1" WALL	54"	--
30	PVC CLASS 200	6"	--
31	2'-6" x 3" FLOOR HATCHES	--	3
32	4' x 6' FLOOR HATCHES	--	1
33	4' x 8' FLOOR HATCH	--	1
34	FLAP GATE WATERMAIN F-55	54"	3
35	150# BRASS ADAPTER FLANGE x 2" SWT	4"	1
36	150# ISOLATION GASKET SET	4"	1
37	125# FLANGE x MJ ADAPTER	6"	1
38	1" NPT AIR CONNECTION	1"	3
39	FLAP GATE WATERMAIN F-55	2"	2
40	CASTIRON DRAIN	2"	2

COUNTY OF ORANGE CALIFORNIA

MARK	DESCRIPTION	DATE	APPR.

PREPARED UNDER THE RESPONSIBLE CHARGE OF:

REGISTERED PROFESSIONAL ENGINEER JOHN A. LOAGUE No. 50092 Exp. 6/30/09 CIVIL STATE OF CALIFORNIA

DATE

DESIGNED BY:
DRAWN BY: CADD
CHECKED BY: JOHN LOAGUE
DRAWING CODE: F06-101-7
FILE NAME: -
PLOT DATE: $DATE$
SCALE: AS SHOWN

OC PUBLIC WORKS

PREPARED BY: AKM CONSULTING ENGINEERS

HASTER RETARDING BASIN (C05802) PUMP STATION

PUMP STATION FLOOR PLAN

Sheet Reference Number

M1

Sheet 70 of 104

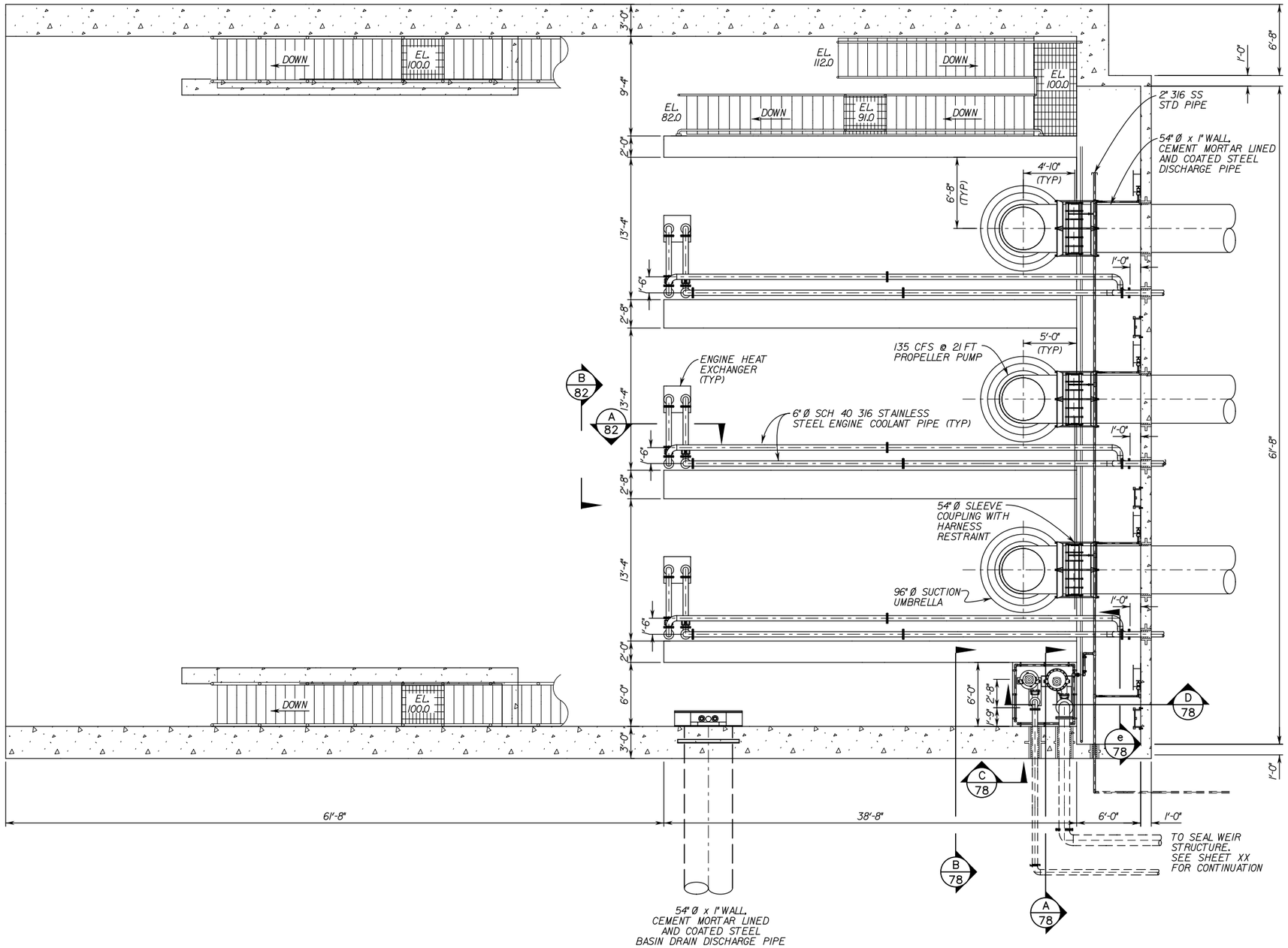

BUILDING MECHANICAL PLAN (BOTTOM FLOOR)

SCALE: 3/16" = 1'-0"

COUNTY OF ORANGE CALIFORNIA

MARK	DESCRIPTION	DATE	APPR.

PREPARED UNDER THE RESPONSIBLE CHARGE OF:

REGISTERED PROFESSIONAL ENGINEER JOHN A. LOAGUE No. 50292 Exp. 6/30/09 CIVIL STATE OF CALIFORNIA

DATE

DESIGNED BY:

DRAWN BY: CADD

CHECKED BY: JOHN LOAGUE

DRAWING CODE: F06-101-7

FILE NAME: -

PLOT DATE: $DATE$

SCALE: AS SHOWN

OC PUBLIC WORKS

PREPARED BY: AKM CONSULTING ENGINEERS

HASTER RETARDING BASIN (C05802) PUMP STATION

SUMP PLAN

Sheet Reference Number

M-2

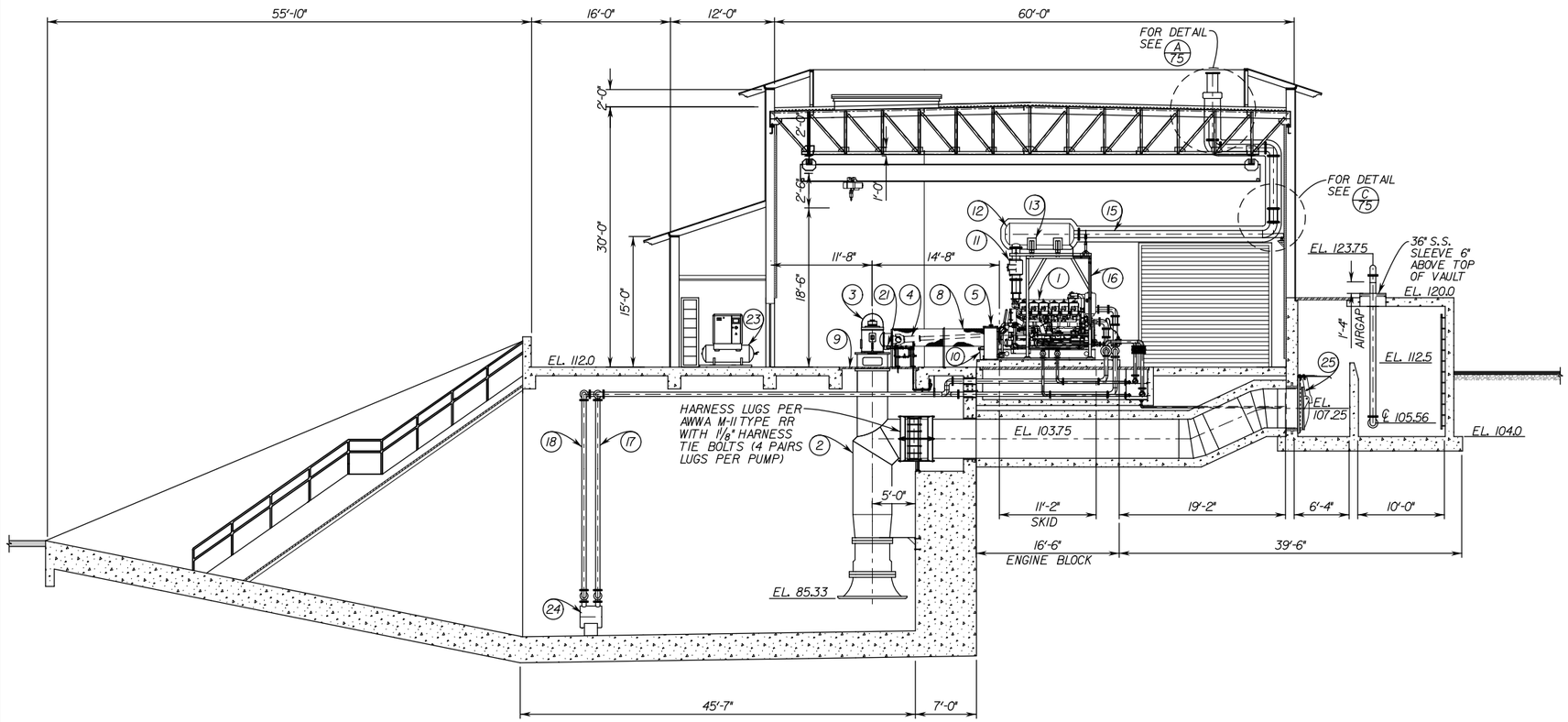

MECHANICAL SECTION A/70

SCALE: 1/8" = 1'-0"

LIST OF MATERIALS

ITEM	DESCRIPTION	SIZE	QTY
1	NATURAL GAS ENGINE, WAUKESHA 5790 G	--	1
2	PROPELLER PUMP, JOHNSTON 48 PO 54" DISCHARGE	54"	1
3	RIGHT ANGLE GEAR DRIVE WATER COOLED, AMARILLO SL-1500 3:1 RATIO	--	1
4	DRIVE SHAFT WITH UNIVERSAL JOINTS	--	1
5	POWER TAKE OFF/ CLUTCH TWIN DISC SP-321-P-00	--	1
6	AUXILARY HEAT EXCHANGER 5" JACKET WATER IN & OUT 4" COOLING WATER IN & OUT	5	1
7	LUBE OIL FILTER	--	1
8	DRIVE SHAFT GUARD	--	1
9	PUMP MOUNTING PLATE	2"	1
10	BATTERY BOX 2-8D-3 BATTERIES	--	1
11	CATALYTIC CONVERTER, FLANGED	10"	1
12	SILENCER, FLANGED GT EXHAUST SYSTEMS INC 201-6100 SUPER CRITICAL GRADE	10"	1
13	SILENCER SUPPORT 316 STAINLESS STEEL	--	1
14	TOLCO 318/319 PIPE SUPPORT 316 STAINLESS STEEL	-	1
15	10" SCHEDULE 40S 316 STAINLESS STEEL	--	--
16	SILENCER AND CATALYTIC CONVERTER SUPPORT 316 STAINLESS STEEL	-	1
17	ENGINE COOLING WATER IN, SCH 40S 316 STAINLESS STEEL	6"	-
18	ENGINE COOLING WATER OUT, SCH 40S 316 STAINLESS STEEL	6"	-
19	AUXILLARY COOLING WATER IN, SCH 40S 316 STAINLESS STEEL	6"	-
20	AUXILLARY COOLING WATER OUT, SCH 40S 316 STAINLESS STEEL	6"	-
21	RIGHT ANGLE GEAR DRIVE HEAT EXCHANGER, NPT	1"	1
22	AUXILLARY COOLING WATER SHUT OFF VALVES 125# FLANGED 316 STAINLESS STEEL NON RISING STEM GATE VALVE 220 DEGREE FAHRENHEIT SERVICE 316 STAINLESS STEEL	4"	2
23	AIR COMPRESSOR, ATLAS COPCO GAI-100T AFF	-	--
24	HEAT EXCHANGER, ENGINE COOLING	6"	-
25	FLAP GATE WATERMAIN F-55	54"	--
26	FLAP GATE WATERMAIN F-55	8"	--
		-	-

COUNTY OF ORANGE CALIFORNIA

MARK	DESCRIPTION	DATE	APPR.

PREPARED UNDER THE RESPONSIBLE CHARGE OF:

REGISTERED PROFESSIONAL ENGINEER JOHN A. LOAGUE No. 50092 Exp. 6/30/09 CIVIL STATE OF CALIFORNIA

DATE

DESIGNED BY:
DRAWN BY: CADD
CHECKED BY: JOHN LOAGUE
DRAWING CODE: F06-101-7
FILE NAME: -
PLOT DATE: $DATE$
SCALE: AS SHOWN

OC PUBLIC WORKS

PREPARED BY: AKM CONSULTING ENGINEERS

HASTER RETARDING BASIN (C05B02) PUMP STATION

PUMP STATION SECTION

Sheet Reference Number

M-3

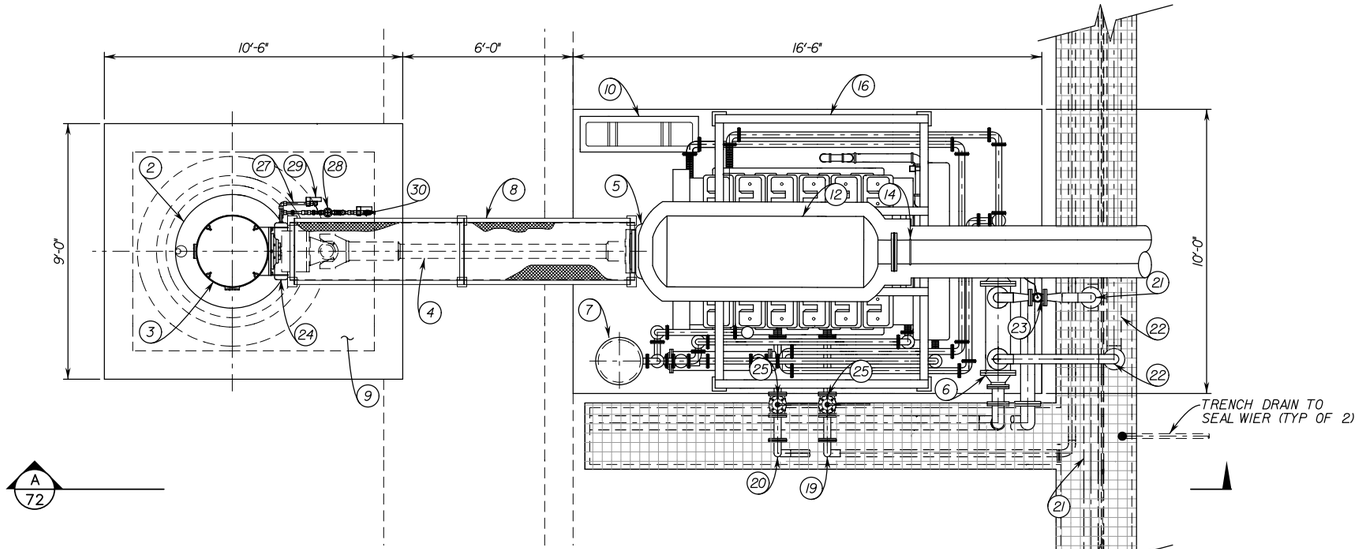

TYPICAL ENGINE AND RIGHT ANGLE GEAR DRIVE PLAN

SCALE: 3/8" = 1'-0"

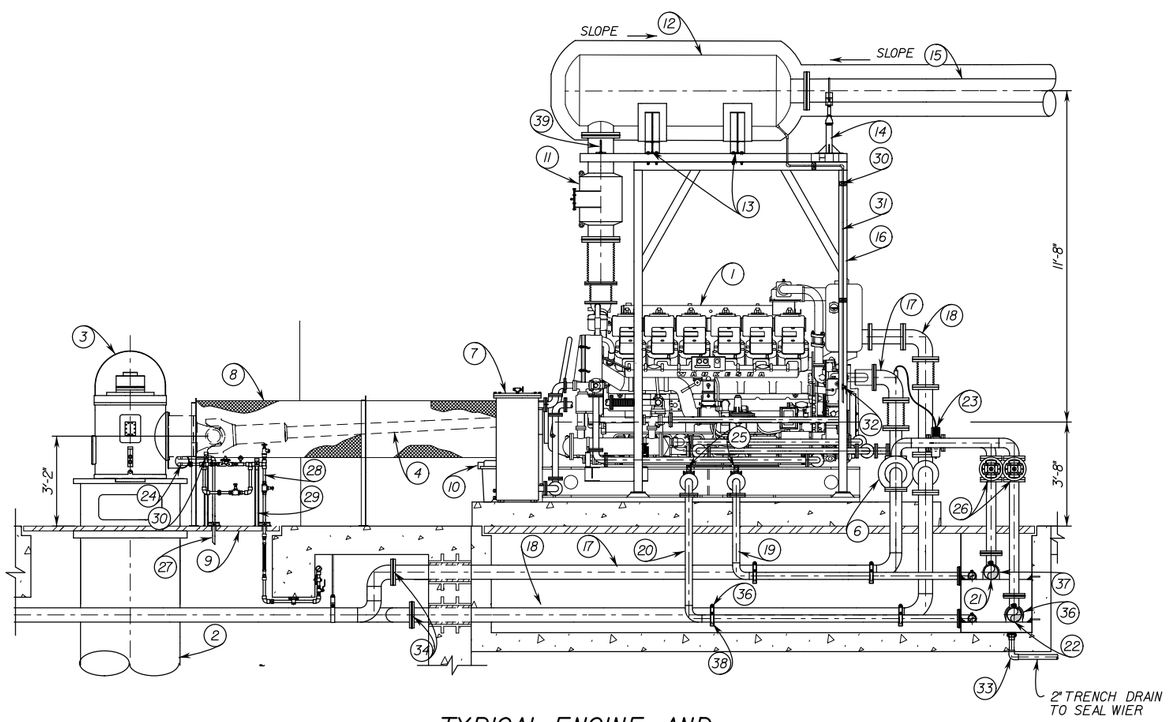

TYPICAL ENGINE AND RIGHT ANGLE GEAR DRIVE ELEVATION

A
72

SCALE: 3/8" = 1'-0"

LIST OF MATERIALS

ITEM	DESCRIPTION	SIZE	QTY
1	NATURAL GAS ENGINE, WAUKESHA 5790 G	--	1
2	PROPELLER PUMP, JOHNSTON 48 PO 54" DISCHARGE	54"	1
3	RIGHT ANGLE GEAR DRIVE WATER COOLED, AMARILLO SL 1500 3: 1 RATIO	--	1
4	DRIVE SHAFT WITH UNIVERSAL JOINTS, 3° SLOPE	--	1
5	POWER TAKE-OFF CLUTCH, TWIN DISC SP-321-P-00	--	1
6	AUXILIARY HEAT EXCHANGER 5" JACKET WATER IN AND OUT 4" COOLING WATER IN AND OUT	5"	1
7	LUBE OIL FILTER	--	1
8	DRIVE SHAFT GUARD SEE SHEET M-6	--	1
9	PUMP MOUNTING PLATE	2"	1
10	BATTERY BOX 2-8D-3 BATTERIES	--	1
11	CATALYTIC CONVERTER, FLANGED	10"	1
12	SILENCER, FLANGED GT EXHAUST SYSTEMS INC. 201-6100 SUPER CRITICAL GRADE WITH CALCIUM SILICATES RIDGID INSULATION WITH SS JACKET	10"	1
13	SILENCER SUPPORT 316 STAINLESS STEEL (E/M-5)	--	1
14	TOLCO 318-319 PIPE SUPPORT 316 STAINLESS STEEL	10"	1
15	SCHEDULE 40S 316 STAINLESS STEEL PIPE WITH 6" CALCIUM SILICATE RIDGID INSULATION WITH SS JACKET	10"	--
16	SILENCER AND CATALYTIC CONVERTER SUPPORT (B/M-5) 316 STAINLESS STEEL	--	1
17	ENGINE COOLING WATER IN, SCH 40S 316 STAINLESS STEEL	6"	--
18	ENGINE COOLING WATER OUT, SCH 40S 316 STAINLESS STEEL	6"	--
19	NATURAL GAS SUPPLY 7 PSI, SCH 80 SMLS PIPE	3"	--
20	LPG SUPPLY 7 PSI, SCH 80 SMLS PIPE	3"	--
21	AUXILIARY COOLING WATER IN, SCH 40S 316 STAINLESS STEEL	6"	--
22	AUXILIARY COOLING WATER OUT, SCH 40S 316 STAINLESS STEEL	6"	--
23	AUXILIARY COOLING TEMPERATURE MODULATING VALVE, FLANGED	2 1/2"	1
24	RIGHT ANGLE GEAR DRIVE HEAT EXCHANGE, NPT	1"	1
25	GAS SHUT-OFF VALVES, PLUG VALVE 150# FLANGED	3"	2
26	AUXILIARY COOLING WATER SHUT-OFF VALVES 125# FLANGED 316 STAINLESS STEEL NON RISING STEM GATE VALVE 220°F AHRENHEIT SERVICE 316 STAINLESS STEEL	4"	2
27	RIGHT ANGLE GEAR DRIVE HEAT EXCHANGER DRAIN TO SUMP PUMP, TYPE "K" COPPER	1"	1
28	RIGHT ANGLE GEAR DRIVE HEAT EXCHANGER SOLENOID TO VALVE MANIFOLD, TYPE "K" COPPER	1"	1
29	STAINLESS STEEL UNISTRUT CHANNEL	1 5/8"	AS REQ'D
30	UNISTRUT CLAMP WITH INSERT (TYP)	1"	AS REQ'D
31	316 S. S. CONDISATE DRAIN PIPE	1/2"	AS REQ'D
32	316 STAINLESS STEEL BALL VALVE	1/2"	1
33	SUMP DRAIN	2"	AS REQ'D
34	VICTAULIC FLANGE STAINLESS STEEL	6"	2
35	1 5/8" STRUT CHANNEL 316 SS	1 5/8"	AS REQ'D
36	1 5/8" STRUT-CLAMP WITH THERMOPLASTIC ELASTONER CUSHION	6"	AS REQ'D
37	1 5/8" STRUT-CLAMP WITH THERMOPLASTIC ELASTONER CUSHION	4"	AS REQ'D
38	1 5/8" STRUT-CLAMP WITH THERMOPLASTIC ELASTONER CUSHION	3"	-
39	CATALYTIC CONVERTER SUPPORT (D/M-5)	10"	1

COUNTY OF ORANGE CALIFORNIA

MARK	DESCRIPTION	DATE	APPR.

PREPARED UNDER THE RESPONSIBLE CHARGE OF:

REGISTERED PROFESSIONAL ENGINEER JOHN A. LOAGUE No. 50092 Exp. 6/30/09 CIVIL STATE OF CALIFORNIA

DATE

DESIGNED BY:
DRAWN BY: CADD
CHECKED BY: JOHN LOAGUE
DRAWING CODE: F06-101-7
FILE NAME:
PLOT DATE: $DATE$
SCALE: AS SHOWN

OC PUBLIC WORKS

PREPARED BY: AKM CONSULTING ENGINEERS

HASTER RETARDING BASIN (C05B02) PUMP STATION

ENGINE AND RIGHT ANGLE GEAR DRIVE PLAN AND ELEVATION

Sheet Reference Number

M-4

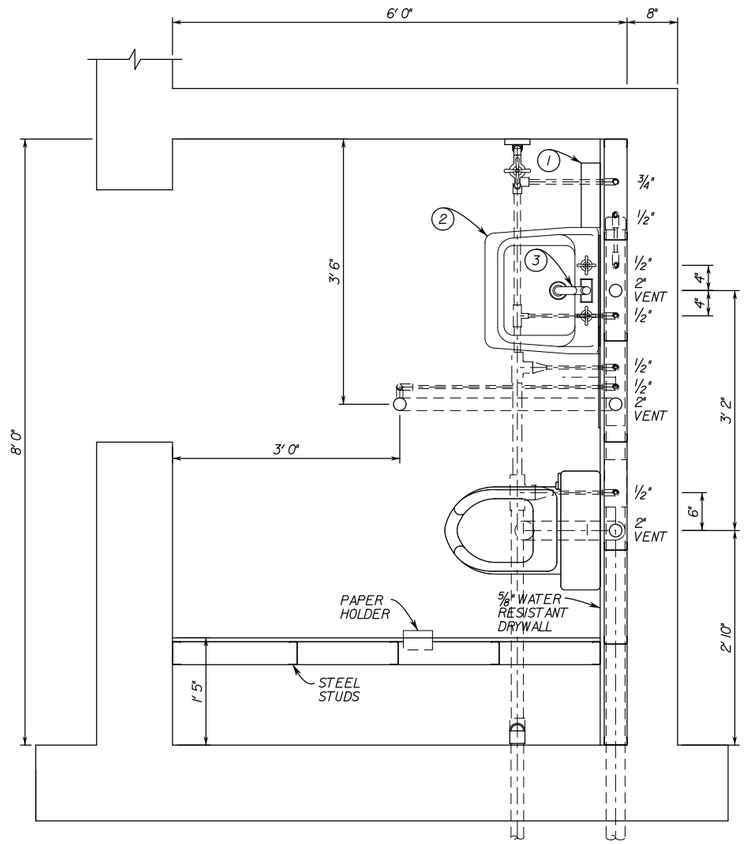

RESTROOM PLAN

SCALE: 1" = 1'-0"

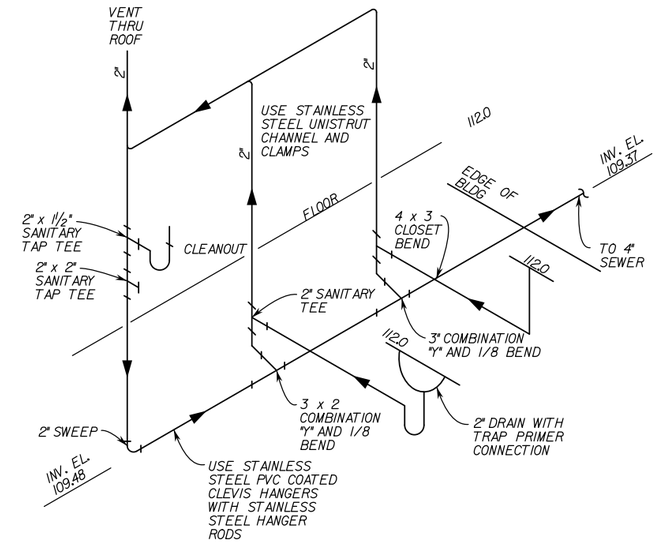

WASTE AND VENT SYSTEM

NOT TO SCALE

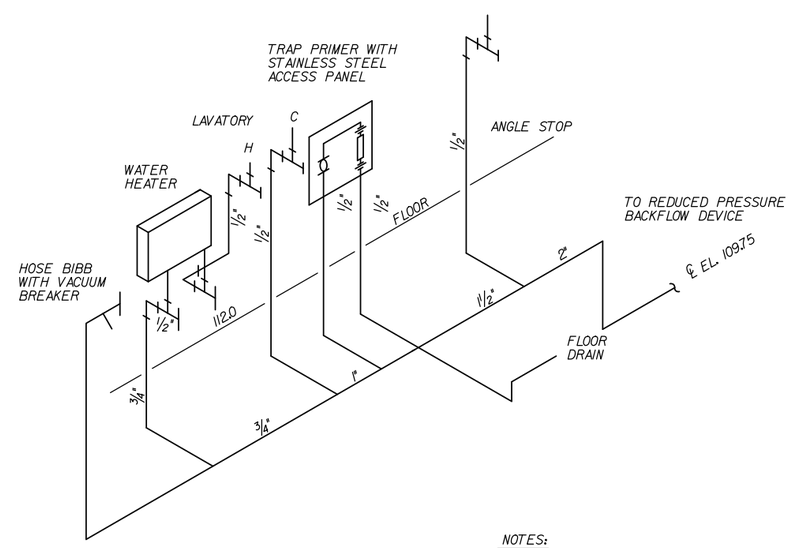

NOTES:

1. ALL COPPER TUBING SHALL BE TYPE "K" RIGID.
2. ALL COPPER TUBING SHALL BE SUPPORTED BY S.S. UNISTRUT CHANNEL WITH VIBRACLAMPS.

LIST OF MATERIALS

NO.	ITEM	DESCRIPTION
1	WATER HEATER	BOSCH POWER STAR AE 9.5 40 AMPS 240V 12.25" WIDE, 6.5" HIGH, 1/2" CONNECTIONS
2	LAVATORY	AMERICAN STANDARD COMRADE WALL HUNG 0124J31 WITH CONCEALED ARMS, COLOR; WHITE
3	LAVATORY FAUCET	AMERICAN STANDARD TROPIC 7038.2012 HANDLE CENTERSET WITH POP UP
4	WATER CLOSET	AMERICAN STANDARD CADET 3 FLOW WISE ELONGATED TOILET 2832J28 COLOR; WHITE SEAT 5325J01 COLOR; WHITE

COUNTY OF ORANGE CALIFORNIA

MARK	DESCRIPTION	DATE	APPR.

PREPARED UNDER THE RESPONSIBLE CHARGE OF:

REGISTERED PROFESSIONAL ENGINEER JOHN A. LOAGUE No. 50092 Exp. 6/30/09 CIVIL STATE OF CALIFORNIA

DATE

DESIGNED BY: GLEEE DEITER
DRAWN BY: CADD
CHECKED BY: JOHN LOAGUE
DRAWING CODE: F06-101-7
FILE NAME: -
PLOT DATE: $DATE$
SCALE: AS SHOWN

OC PUBLIC WORKS

PREPARED BY: AKM CONSULTING ENGINEERS

HASTER RETARDING BASIN (C05802) PUMP STATION

RESTROOM DETAILS

Sheet Reference Number

M–5

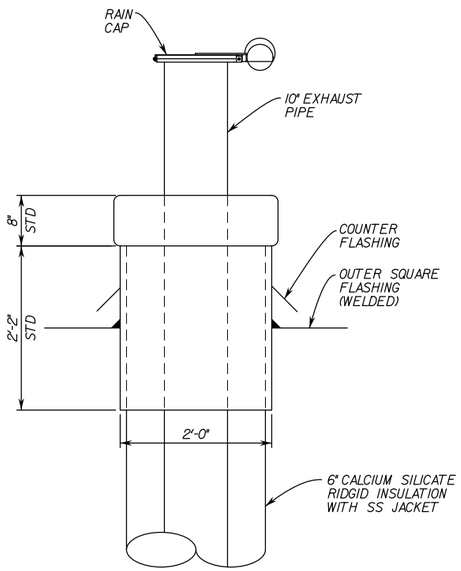

ROOF THIMBLE (A/72)

SCALE: 1" = 1'-0"

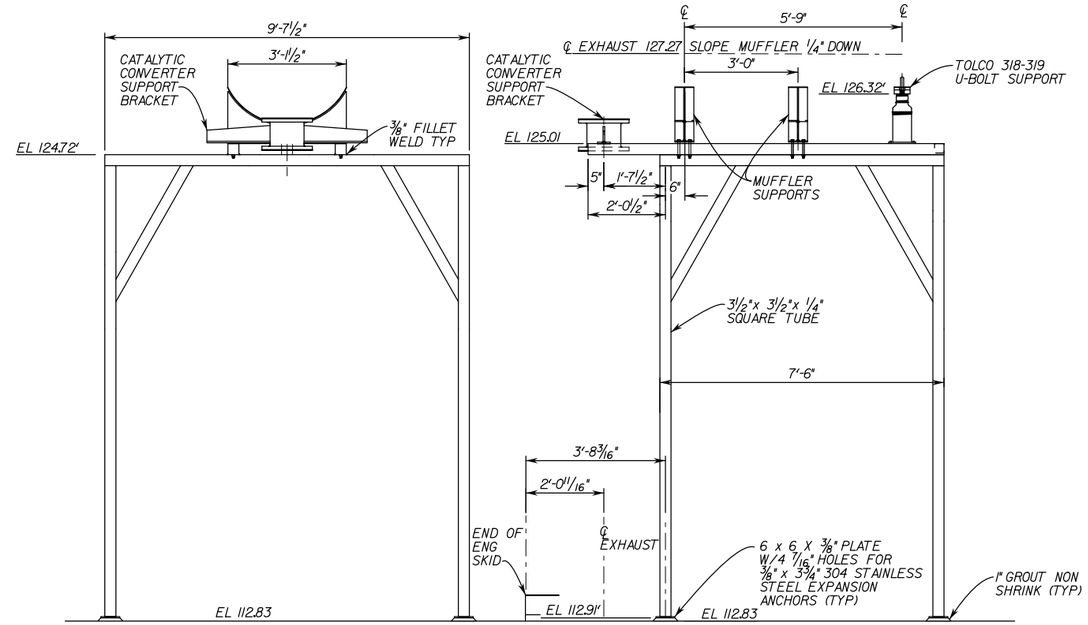

MUFFLER SUPPORT (B/72)

SCALE: ½" = 1'-0"

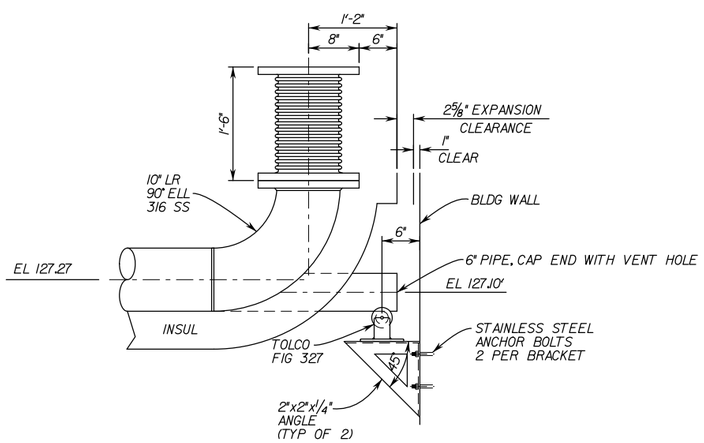

ROLLER SUPPORT (C/72)

SCALE: 1" = 1'-0"

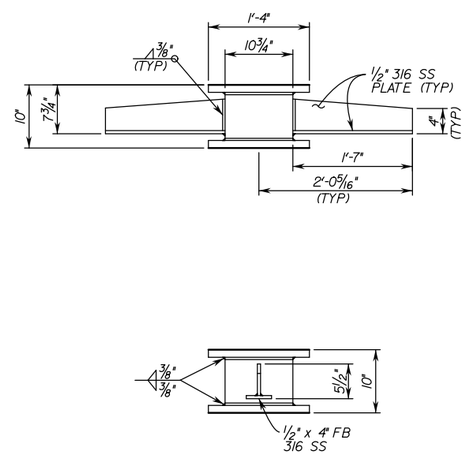

CATALYTIC CONVERTER SUPPORT BRACKET (D/72)

SCALE: 1" = 1'-0"

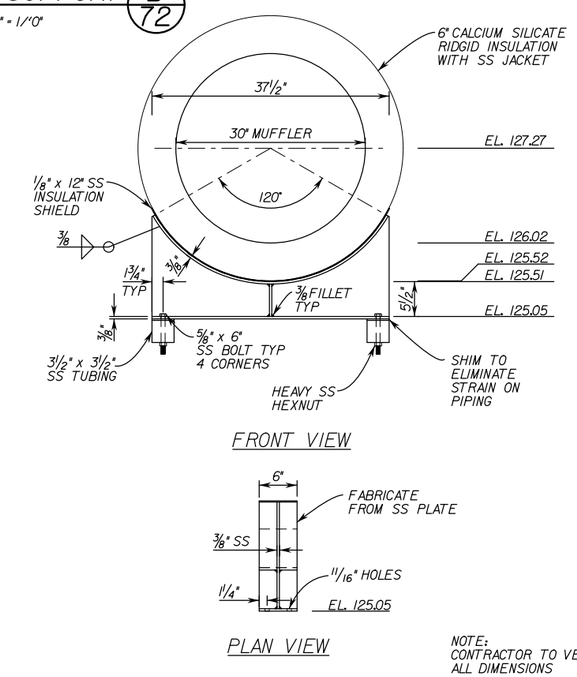

NOTE:
CONTRACTOR TO VERIFY ALL DIMENSIONS

MUFFLER SUPPORT (E/72)

SCALE: 1" = 1'-0"

COUNTY OF ORANGE CALIFORNIA

MARK	DESCRIPTION	DATE	APPR.

PREPARED UNDER THE RESPONSIBLE CHARGE OF:

REGISTERED PROFESSIONAL ENGINEER JOHN A. LOAGUE No. 50092 Exp. 6/30/09 CIVIL STATE OF CALIFORNIA

DATE

DESIGNED BY:
DRAWN BY: CADD
CHECKED BY: JOHN LOAGUE
DRAWING CODE: F06-101-7
FILE NAME:
PLOT DATE: $DATE$
SCALE: AS SHOWN

OC PUBLIC WORKS

PREPARED BY: AKM CONSULTING ENGINEERS

HASTER RETARDING BASIN (C05B02) PUMP STATION

ENGINE EXHAUST DETAILS

Sheet Reference Number

M–6

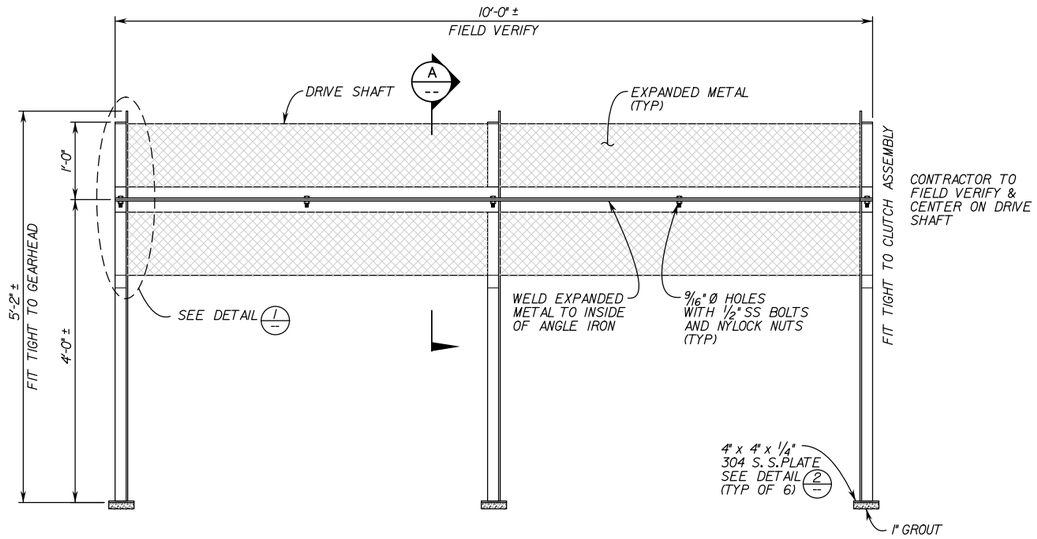

DRIVE SHAFT GUARD ELEVATION

SCALE: 1" = 1'-0"

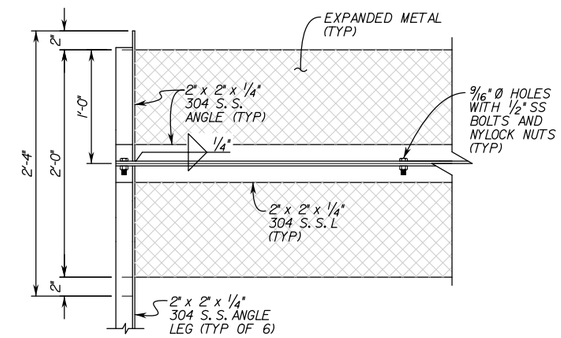

DRIVE SHAFT GUARD DETAIL 1 --

SCALE: 1 1/2" = 1'-0"

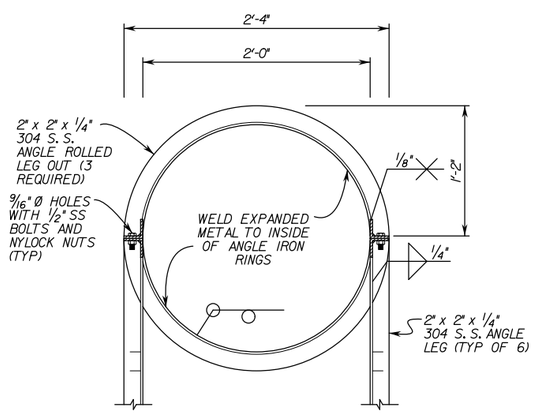

DRIVE SHAFT GUARD SECTION A --

SCALE: 1 1/2" = 1'-0"

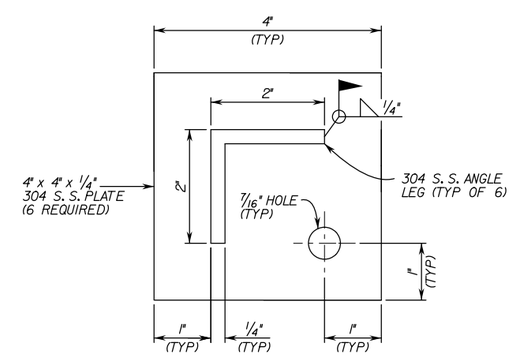

DRIVE SHAFT PLATE DETAIL 2 --

SCALE: 3/4" = 1"

COUNTY OF ORANGE CALIFORNIA

MARK	DESCRIPTION	DATE	APPR.

PREPARED UNDER THE RESPONSIBLE CHARGE OF:

REGISTERED PROFESSIONAL ENGINEER JOHN A. LOAGUE No. 50292 Exp. 6/30/09 CIVIL STATE OF CALIFORNIA

DATE

DESIGNED BY:

DRAWN BY: CADD

CHECKED BY: JOHN LOAGUE

DRAWING CODE: F06-101-7

FILE NAME: -

PLOT DATE: $DATE$

SCALE: AS SHOWN

OC PUBLIC WORKS

PREPARED BY: AKM CONSULTING ENGINEERS

HASTER RETARDING BASIN (C05802) PUMP STATION

DRIVE SHAFT DETAILS

Sheet Reference Number

M-7

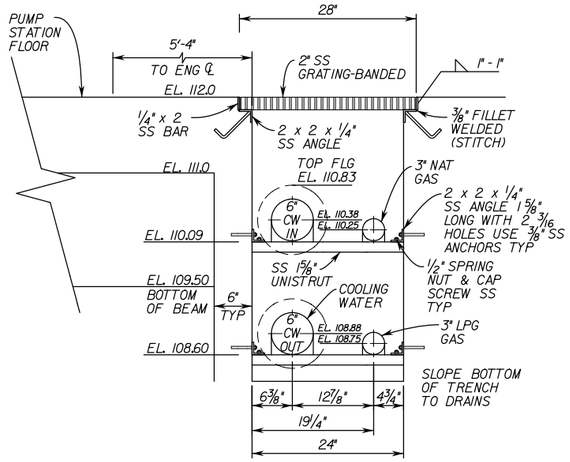

TRENCH SECTION A/70
SCALE: 1" = 1'-0"

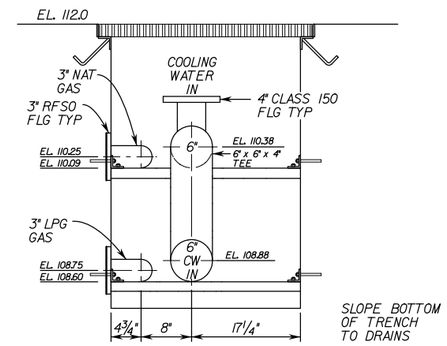

TRENCH SECTION B/70
SCALE: 1" = 1'-0"

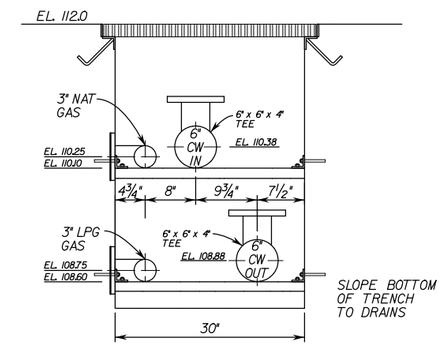

TRENCH SECTION C/70
SCALE: 1" = 1'-0"

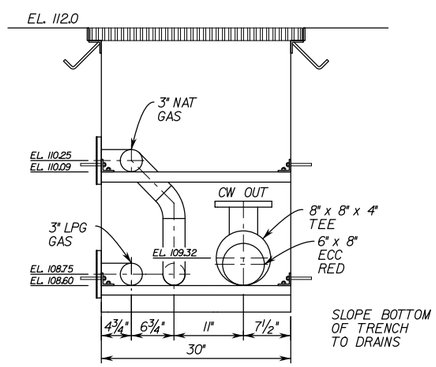

TRENCH SECTION D/70
SCALE: 1" = 1'-0"

NOTE:

USE STAINLESS STEEL STRUT CLAMPS WITH THERMOPLASTIC ELASTOMER INSERT TYP ALL TRENCH SECTIONS

COUNTY OF ORANGE CALIFORNIA

MARK	DESCRIPTION	DATE	APPR.

PREPARED UNDER THE RESPONSIBLE CHARGE OF:

REGISTERED PROFESSIONAL ENGINEER JOHN A. LOAGUE No. 50092 Exp. 6/30/09 CIVIL STATE OF CALIFORNIA

DATE

DESIGNED BY:

DRAWN BY: CADD

CHECKED BY: JOHN LOAGUE

DRAWING CODE: F06-101-7

FILE NAME: -

PLOT DATE: $DATE$

SCALE: AS SHOWN

OC PUBLIC WORKS

PREPARED BY: AKM CONSULTING ENGINEERS

HASTER RETARDING BASIN (C05802) PUMP STATION

TRENCH DETAILS

Sheet Reference Number

M–8

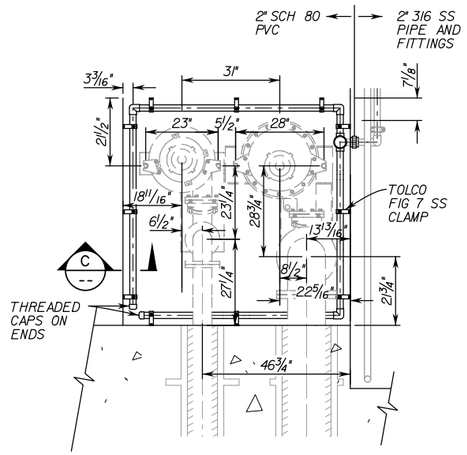

SUMP PIPING PLAN

SCALE: 1/2" = 1'-0"

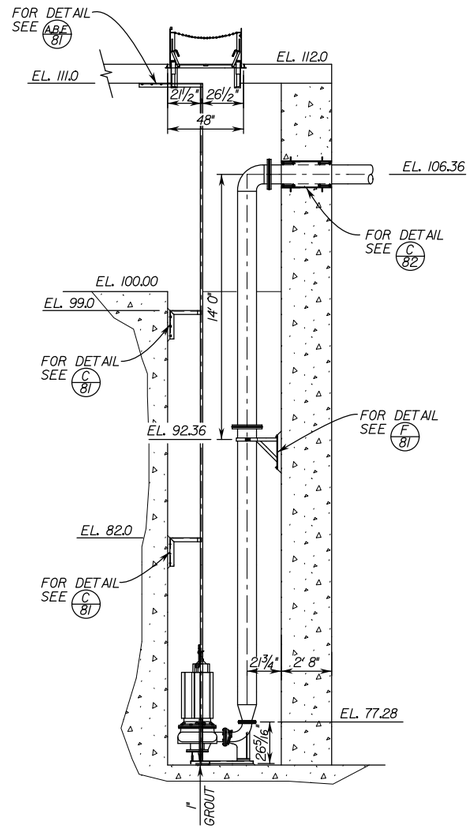

SUMP SECTION A/71

SCALE: 1/4" = 1'-0"

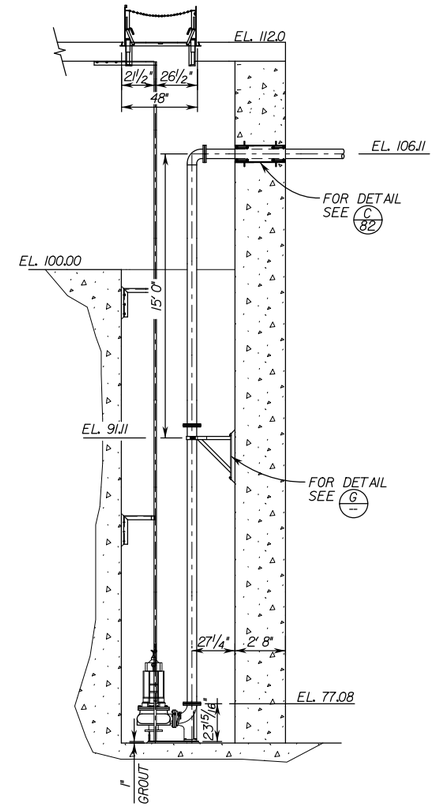

SUMP SECTION B/71

SCALE: 1/4" = 1'-0"

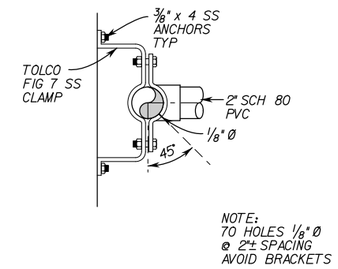

PIT AGITATION SYSTEM SECTION C

NOT TO SCALE

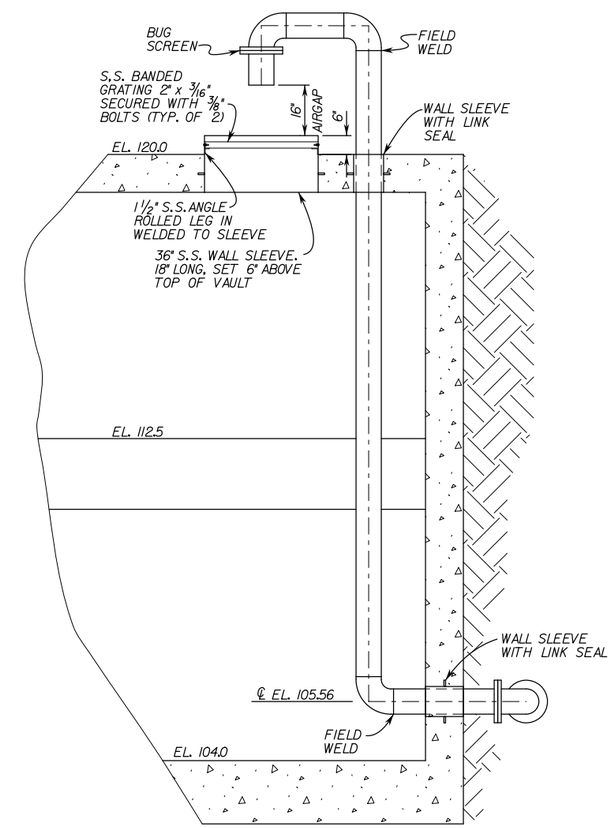

AIRGAP SECTION F/70

NOT TO SCALE

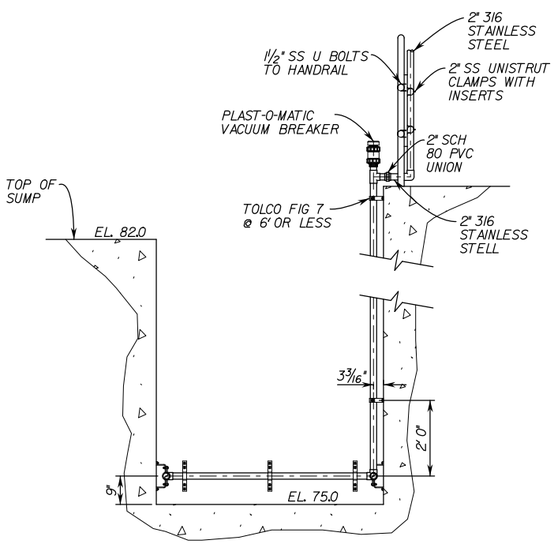

SUMP PUMP PIT AGITATION SYSTEM SECT D/71

SCALE: 1/2" = 1'-0"

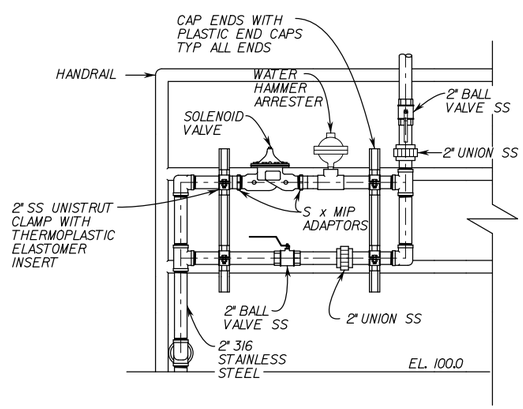

SUMP PUMP PIT AGITATION VALVE MINIFOLD E/71

SCALE: 1" = 1'-0"

COUNTY OF ORANGE CALIFORNIA

MARK	DESCRIPTION	DATE	APPR.

PREPARED UNDER THE RESPONSIBLE CHARGE OF:

REGISTERED PROFESSIONAL ENGINEER JOHN A. LOAGUE No. 50092 Exp. 6/30/09 CIVIL STATE OF CALIFORNIA

DATE

DESIGNED BY:

DRAWN BY: CADD

CHECKED BY: JOHN LOAGUE

DRAWING CODE: F06-101-7

FILE NAME: -

PLOT DATE: $DATE$

SCALE: AS SHOWN

OC PUBLIC WORKS

PREPARED BY: AKM CONSULTING ENGINEERS

HASTER RETARDING BASIN (C05802) PUMP STATION

SUMP PUMP DETAILS

Sheet Reference Number

M-9

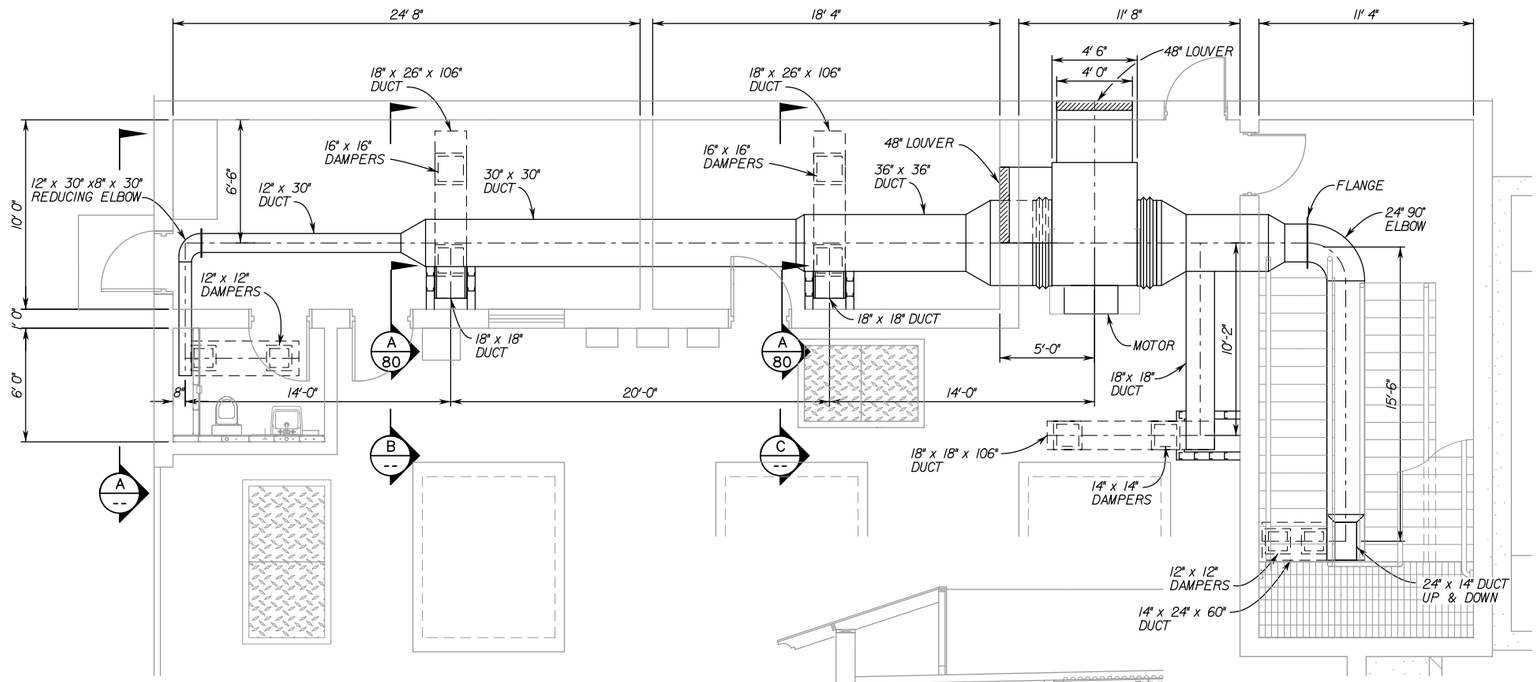

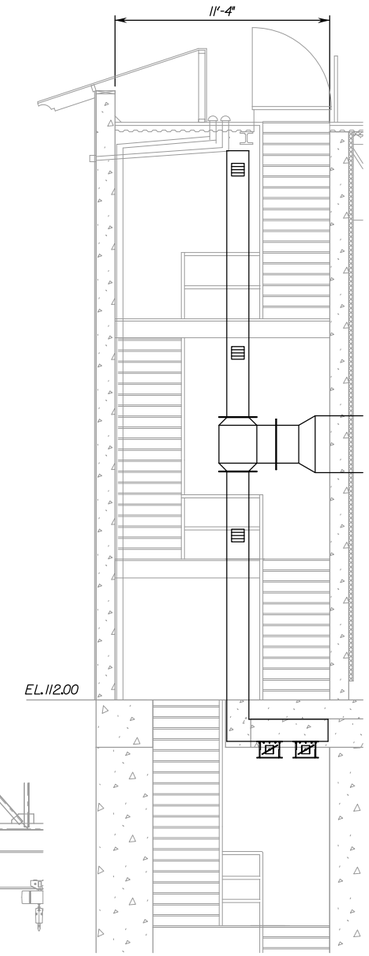

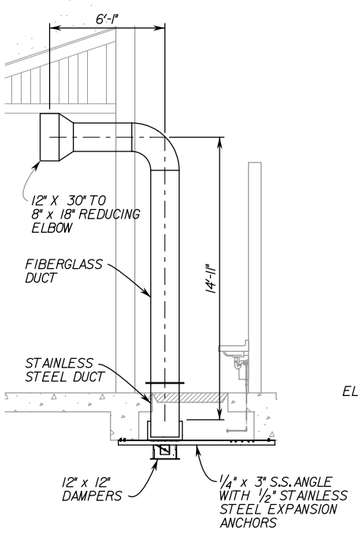

SECTION A -

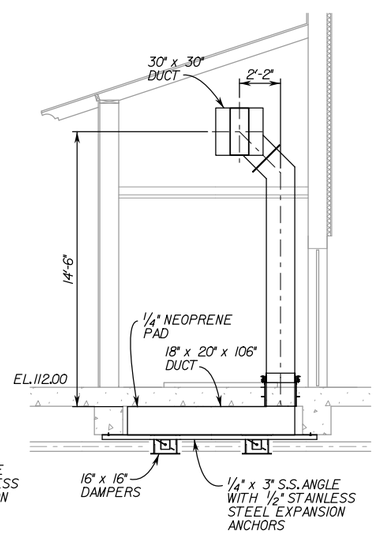

SECTION B -

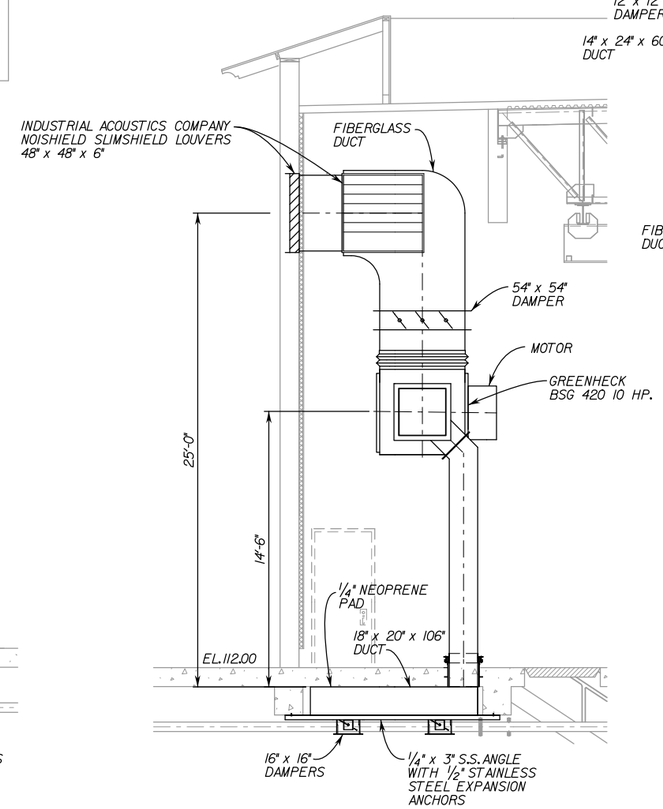

SECTION C -

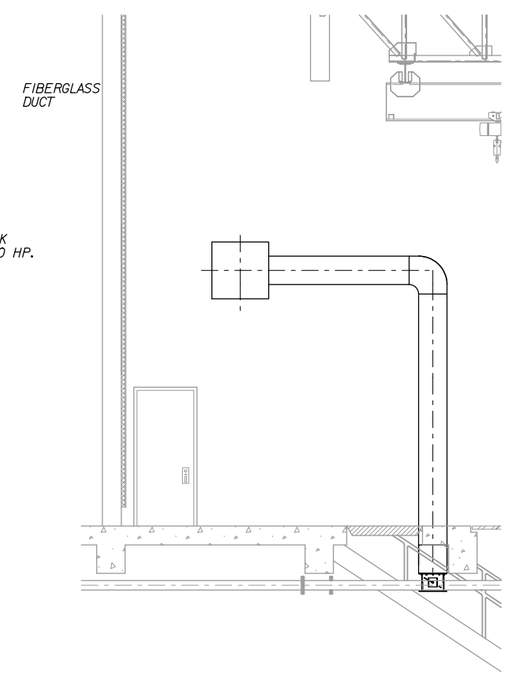

COUNTY OF ORANGE CALIFORNIA

MARK	DESCRIPTION	DATE	APPR.

PREPARED UNDER THE RESPONSIBLE CHARGE OF:

REGISTERED PROFESSIONAL ENGINEER JOHN A. LOAGUE No. 50292 Exp. 6/30/09 CIVIL STATE OF CALIFORNIA

DATE

DESIGNED BY: GLEN DEITER
DRAWN BY: CADD
CHECKED BY: JOHN LOAGUE
DRAWING CODE: F06-101-7
FILE NAME: -
PLOT DATE: $DATE$
SCALE: AS SHOWN

OC PUBLIC WORKS

PREPARED BY: AKM CONSULTING ENGINEERS

HASTER RETARDING BASIN (C05802) PUMP STATION

SUMP VENTILATION PLAN

Sheet Reference Number

M–10

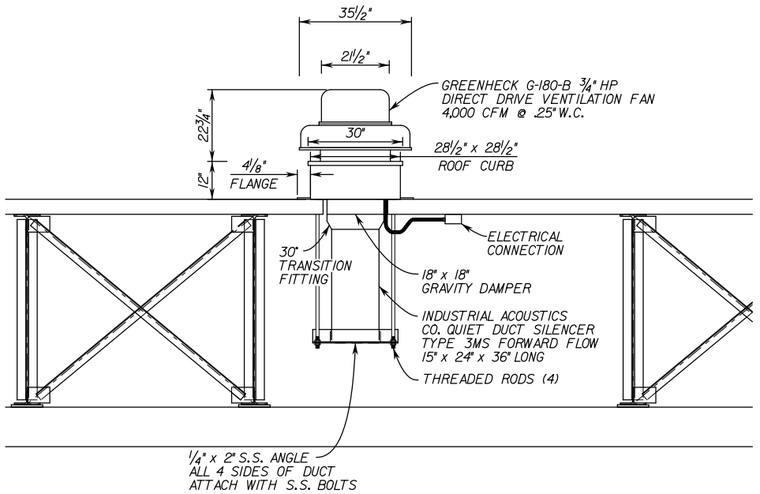

ROOF FAN DETAIL (4 / S-10)

NOT TO SCALE

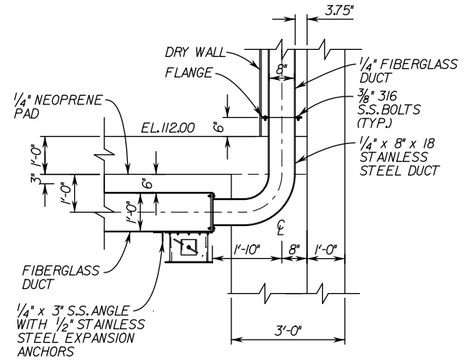

STAINLESS STEEL DUCT (A / 79)

NOT TO SCALE

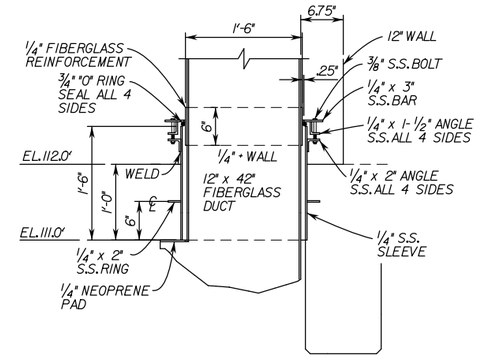

FLOOR SLEEVE W/MOISTURE SEAL (B / 79)

NOT TO SCALE

MARK	DESCRIPTION	DATE	APPR.

PREPARED UNDER THE RESPONSIBLE CHARGE OF:

REGISTERED PROFESSIONAL ENGINEER JOHN A. LOAGUE No. 50092 Exp. 6/30/09 CIVIL STATE OF CALIFORNIA

DATE

DESIGNED BY: GLEN DEITER

DRAWN BY: CADD

CHECKED BY: JOHN LOAGUE

DRAWING CODE: F06-101-7

FILE NAME: -

PLOT DATE: $DATE$

SCALE: AS SHOWN

OC PUBLIC WORKS

PREPARED BY: AKM CONSULTING ENGINEERS

HASTER RETARDING BASIN (C05B02) PUMP STATION

VENTILATION DETAILS

Sheet Reference Number

M-11

Sheet 80 of 104

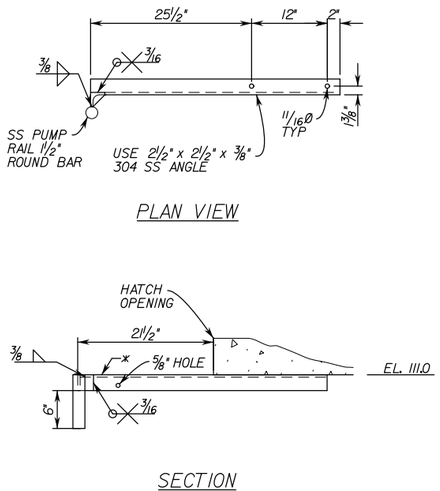

TOP LEFT SUMP PUMP RAIL GUIDE (A/78)

x @ EL. 111.0
SCALE: 1" = 1'-0"

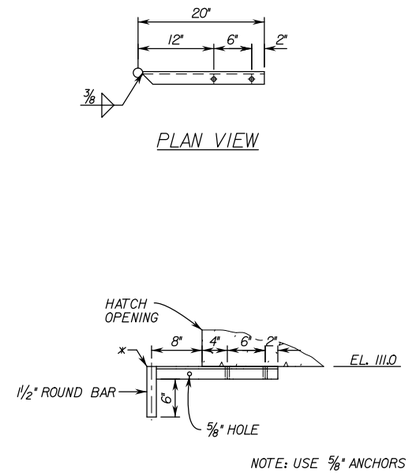

TOP RIGHT SUMP PUMP RAIL GUIDE (B/78)

x @ EL. 111.0
SCALE: 1" = 1'-0"

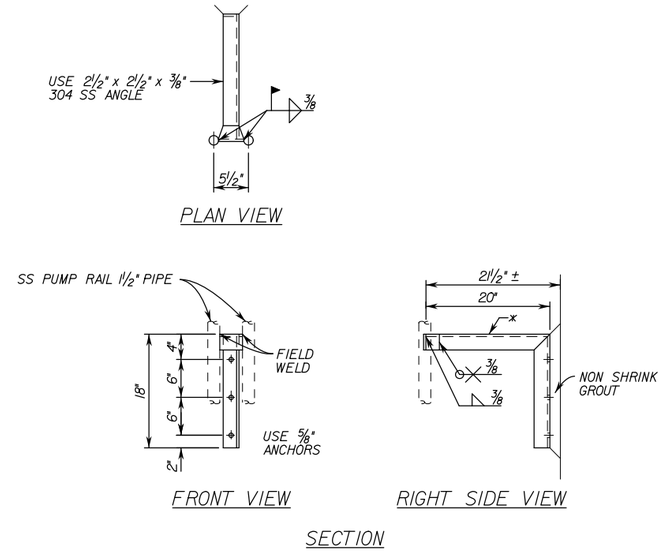

SUMP PUMP SLIDERAIL INTERMEDIATE CENTER SUPPORTS (C/78)

x (2) REQ'D 1 @ EL. 87.0 & 1 @ EL. 99.0

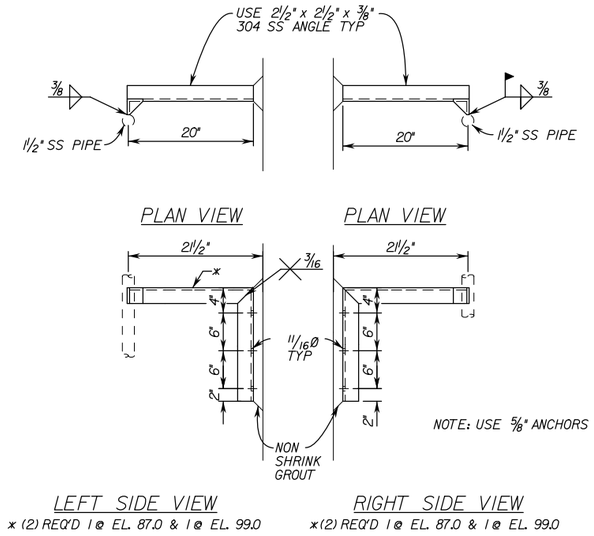

x (2) REQ'D 1 @ EL. 87.0 & 1 @ EL. 99.0
x (2) REQ'D 1 @ EL. 87.0 & 1 @ EL. 99.0

SUMP PUMP SLIDERAIL INTERMEDIATE SIDE SUPPORTS (D/-)

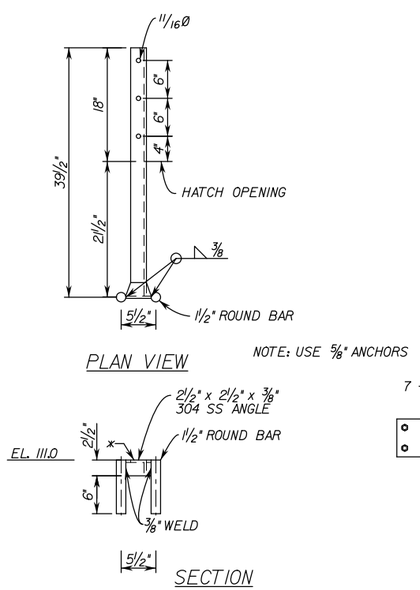

TOP CENTER SUMP PUMP GUIDE RAIL (E/78)

x @ EL. 111.0
SCALE: 1" = 1'-0"

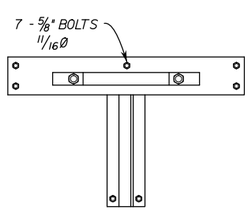

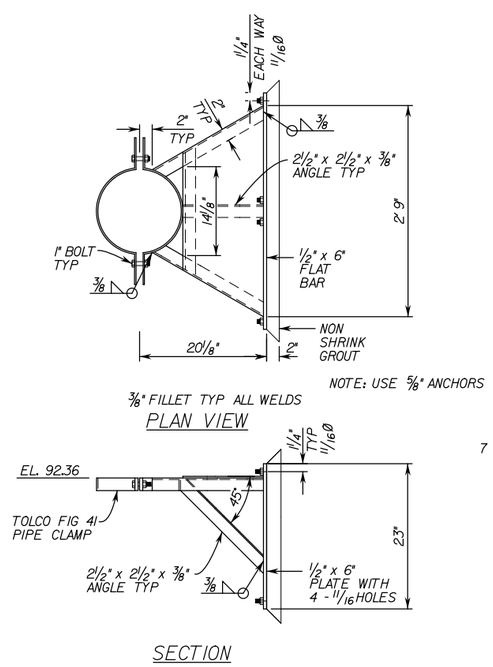

SUMP PUMP PIPE SUPPORT (LARGE PUMP) (F/78)

SCALE: 1" = 1'-0"

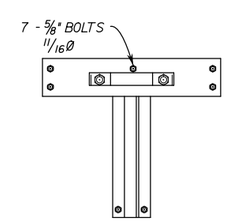

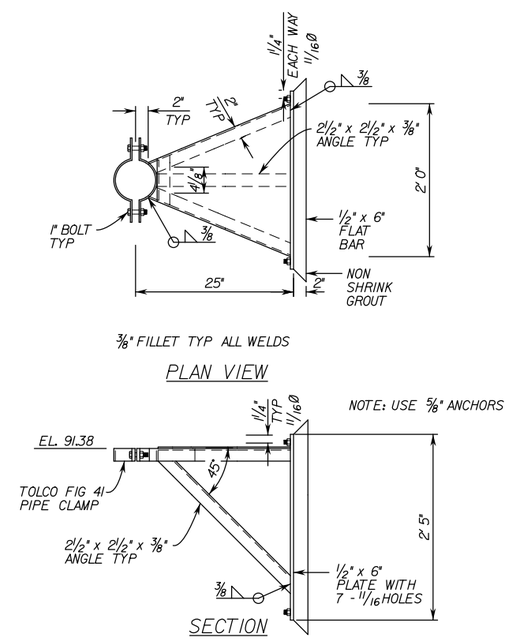

SUMP PUMP PIPE SUPPORT (SMALL PUMP) (G/78)

SCALE: 1" = 1'-0"

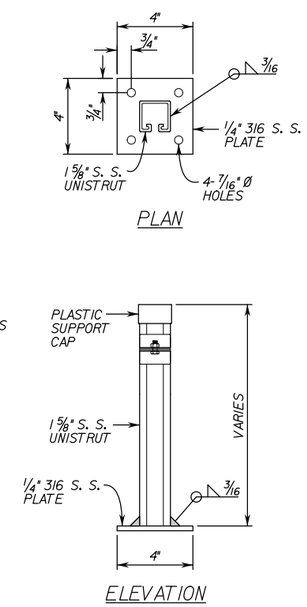

UNISTRUT SUPPORT DETAIL (H/-)

SCALE: 1/4" = 1'-0"

COUNTY OF ORANGE CALIFORNIA

MARK	DESCRIPTION	DATE	APPR.

PREPARED UNDER THE RESPONSIBLE CHARGE OF:

REGISTERED PROFESSIONAL ENGINEER JOHN A. LOAGUE No. 50092 Exp. 6/30/09 CIVIL STATE OF CALIFORNIA

DATE

DESIGNED BY: GLEN DEITER
DRAWN BY: CADD
CHECKED BY: JOHN LOAGUE
DRAWING CODE: F06-101-7
FILE NAME: -
PLOT DATE: $DATE$
SCALE: AS SHOWN

OC PUBLIC WORKS

PREPARED BY: AKM CONSULTING ENGINEERS

HASTER RETARDING BASIN (C05802) PUMP STATION

SUMP PUMP BRACKET DETAILS

Sheet Reference Number

M-12

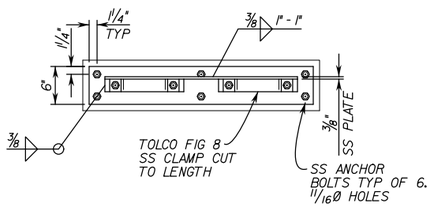

FRONT VIEW

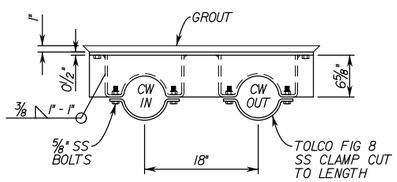

PLAN VIEW
9 REQ'D

WET WELL HEAT EXCHANGER PIPE SUPPORTS (A/71)

SCALE: 1" = 1'-0"

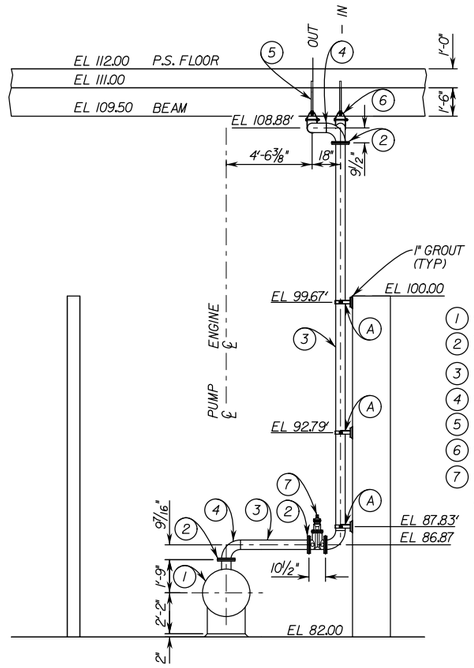

1. HEAT EXCHANGER PER SPEC
2. 6" CLASS 150 304 STAINLESS STEEL FLAT FACED SLIP ON FLANGES
3. 6" SCHEDULE 40 S 304 STAINLESS STEEL PIPE
4. 6" SCHEDULE 40 S 304 STAINLESS STEEL 90° ELLS
5. ¾" 304 SS RODS CUT AND THREADED TO LENGTH
6. 6" I. P. S. STIRRUP HANGERS
7. 6" 125 # FLANGED NON RISING STEM GATE VALVE WITH 2" OPERATING NUT SUITABLE FOR 220 DEGREE FAHRENHEIT SERVICE

HEAT EXCHANGER (B/71)

SCALE: ¼" = 1'-0"

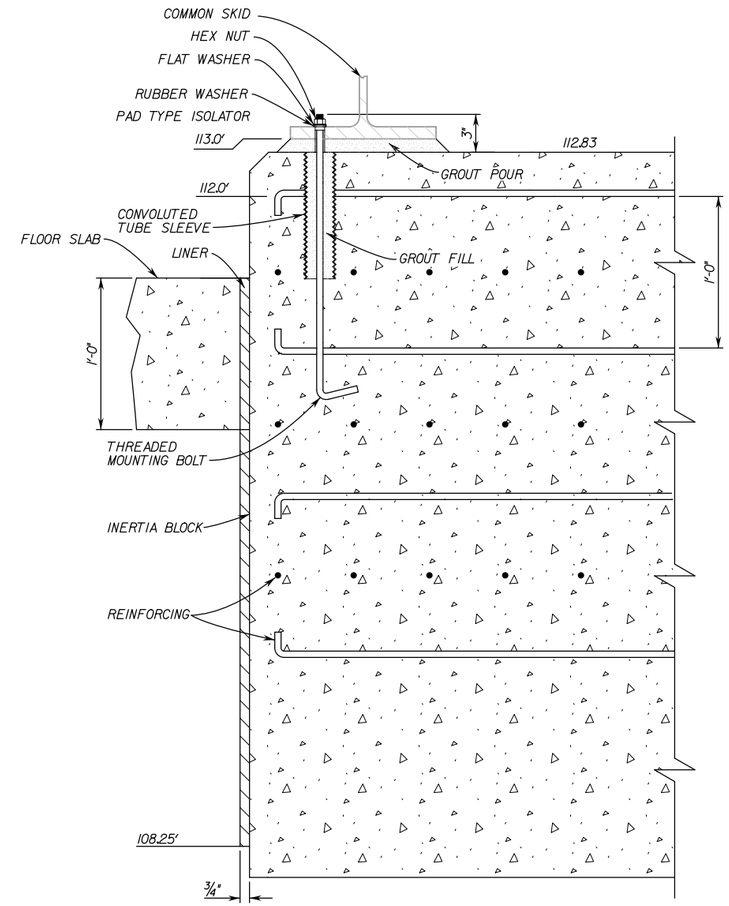

SCHEMATIC FOR PAD VIBRATION ISOLATOR MOUNTING BASE CONSTRUCTION

SCALE: NONE

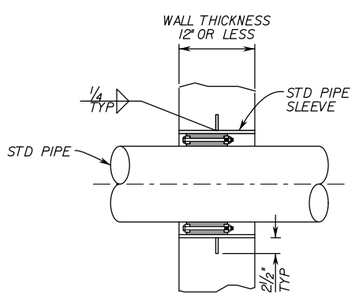

NOTE:
USE SINGLE LINK SEAL WITH SS HDWE IN STD 304 SS PIPE SLEEVE WITH SINGLE WATER STOP RING

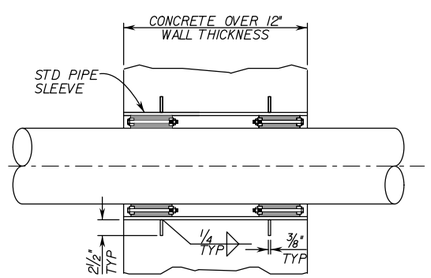

NOTE:
USE DOUBLE LINK SEAL WITH SS HDWE IN STD 304 SS PIPE SLEEVE WITH DOUBLE WATER STOP RING

TYPICAL WALL PENETRATION DETAIL (C/78)

USING LINK SEAL & CAST IN PLACE WALL SLEEVES
NOT TO SCALE

PIPE SIZE (NOM.)	ACTUAL OUTSIDE DIAMETER (O.D.)	STAINLESS STEEL SLEEVE SIZE (INCHES)	LINK-SEAL SIZE NO.	LINKS PER SEAL
1¼"	1.66	3*	LS-275-C	7
1½"	1.90	3.5*	LS-300-C	5
2"	2.38	4*	LS-300-C	6
2½"	2.88	4	LS-200-C	9
3"	3.50	5	LS-300-C	8
4"	4.50	6	LS-300-C	10
6"	6.63	10	LS-475-C	9
8"	8.63	12	LS-475-C	12
10"	10.75	14	LS-425-C	10
12"	12.75	16	LS-425-C	12
14"	14.00	18	LS-400-C	13
16"	16.00	20	LS-400-C	15
18"	18.00	24	LS-500-C	16
20"	20.00	24	LS-400-C	18
22"	22.00	26	LS-400-C	20
24"	24.00	30	LS-500-C	21

COUNTY OF ORANGE CALIFORNIA

MARK	DESCRIPTION	DATE	APPR.

PREPARED UNDER THE RESPONSIBLE CHARGE OF:
REGISTERED PROFESSIONAL ENGINEER JOHN A. LOAGUE No. 50092 Exp. 6/30/09 CIVIL STATE OF CALIFORNIA
DATE

DESIGNED BY:
DRAWN BY: CADD
CHECKED BY: JOHN LOAGUE
DRAWING CODE: F06-101-7
FILE NAME: -
PLOT DATE: $DATE$
SCALE: AS SHOWN

OC PUBLIC WORKS
PREPARED BY: AKM CONSULTING ENGINEERS

HASTER RETARDING BASIN (C05802)
PUMP STATION
WALL PENETRATION AND HEAT EXCHANGER DETAILS

Sheet Reference Number
M-13

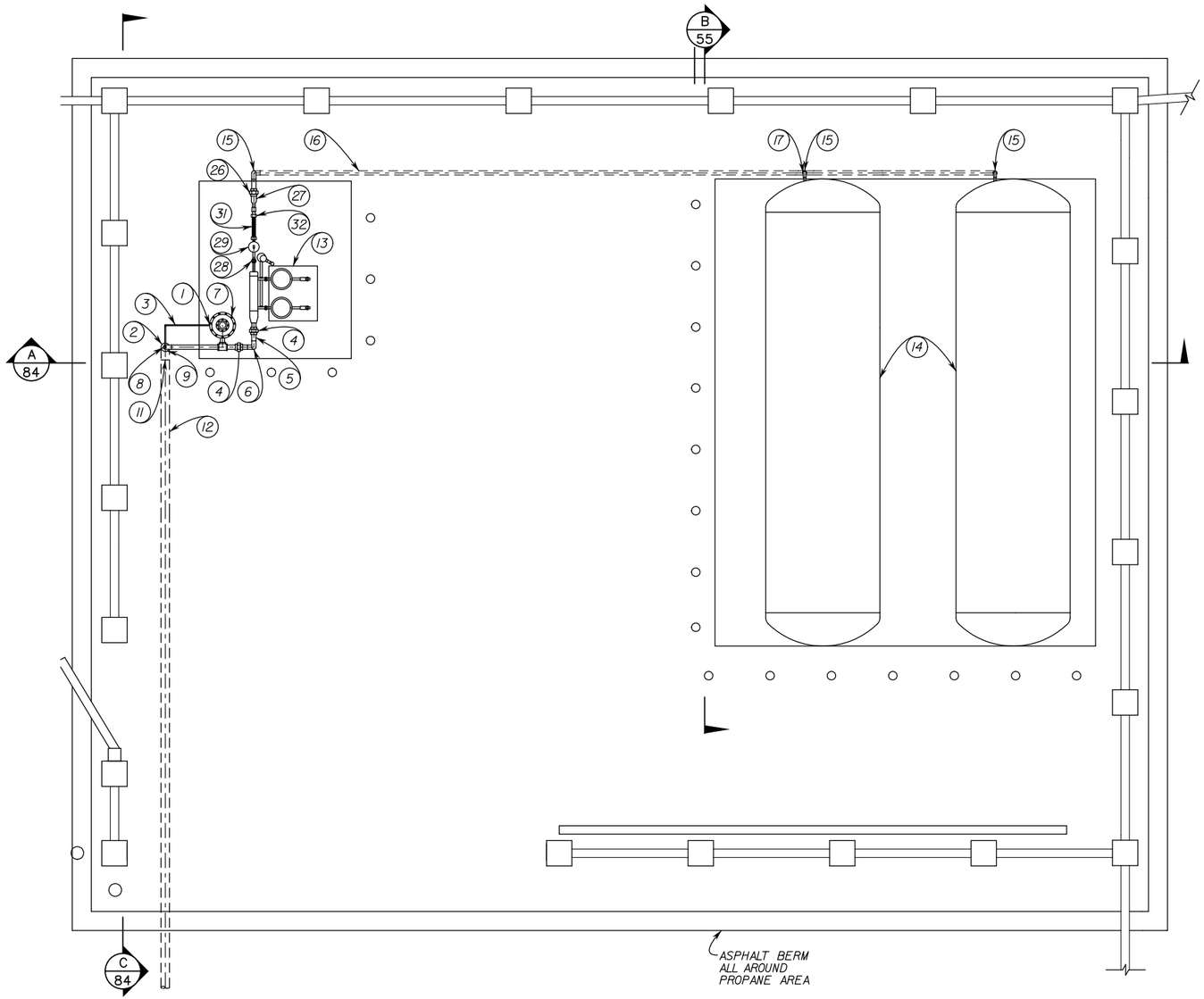

PROPANE PLAN

SCALE: 3/8" = 1'-0"

LIST OF MATERIALS

ITEM	DESCRIPTION	SIZE	QTY
1	I.P.S. x 1/2" O.D. TUBING ADAPTOR	1/2"	1
2	I.P.S. x 1/2" O.D. 90 DEGREE TUBING ADAPTOR	1/2"	1
3	O.D. 316 STAINLESS STEEL TUBING	1/2"	3'
4	3000# FORGED STEEL SCREWED UNION	2"	2
5	SCH 80 SEAMLESS PIPE	2"	10'
6	3000# FORGED STEEL SCREW 90 DEG ELL	2"	2
7	FISHER SERIES 99 GAS REGULATOR SET AT 7 P.S.I.	2"	1
8	3000# FORGED STEEL SCREWED BUSHING	1/2" x 2"	1
9	3000# FORGED STEEL SREWED TEE	2"	1
10	SCH 80 STEEL SWAGE NIPPLE, THREAD SMALL END	2" x 4"	1
11	3000# FORGED STEEL SOCKET WELD 90 DEG ELL	4"	1
12	SCH 80 SEAMLESS PIPE COATED PER SPEC	4"	4'
13	RANSOME RH 400 L.P.G. VAPORIZER		1
14	GALLON L.P.G. TANK	2000	2
15	3000# FORGED STEEL SOCKET WELD 90 DEG ELL	2"	6
16	SCH 80 SEAMLESS PIPE COATED PER SPEC	2"	45'
17	3000# FORGED STEEL SOCKET WELD TEE	2"	1
18	3000# FORGED STEEL SCREWED BUSHING	2" x 1 1/4"	
19	FISHER C407 SERIES INTERNAL VALVE WITH FLOW CONTROL	1 1/4"	1
20	SCH 80 SEAMLESS PIPE	1 1/4"	3'
21	3000# FORGED STEEL SCREWED 90 DEG ELL	1 1/4"	2
22	FISHER N 310 SERIES GLOBE VALVE	1 1/4"	1
23	BRAIDED STAINLESS STEEL HOSE LISTED FOR LPG WITH THREADED CONNECTIONS	1 1/4" x 18"	1
24	3000# FORGED STEEL SCREWED COUPLING	1 1/4"	1
25	SCH 80 STEEL SWAGE NIPPLE	1 1/4" x 2"	2
26	3000# FORGED STEEL SOCKET WELD UNION	2"	3
27	SCH 80 STEEL SWAGE NIPPLE, THREAD SMALL END	2" x 1"	1
28	3000# FORGED STEEL SCREWED UNION	1"	1
29	35 G.P.M. FILTER (L.P.G.)	1"	1
30	3000# FORGED STEEL SOCKET WELD COUPLING	4"	1
31	BRAIDED STAINLESS STEEL HOSE LISTED FOR LPG	1"	1
32	3000# FORGED STEEL SOCKET WELD SCREWED COUPLING	4"	1

COUNTY OF ORANGE CALIFORNIA

MARK	DESCRIPTION	DATE	APPR.

PREPARED UNDER THE RESPONSIBLE CHARGE OF:

REGISTERED PROFESSIONAL ENGINEER JOHN A. LOAGUE No. 50292 Exp. 6/30/09 CIVIL STATE OF CALIFORNIA

DATE

DESIGNED BY: GLEN DEITER
DRAWN BY: CADD
CHECKED BY: JOHN LOAGUE
DRAWING CODE: F06-101-7
FILE NAME: -
PLOT DATE: $DATE$
SCALE: AS SHOWN

OC PUBLIC WORKS

PREPARED BY: AKM CONSULTING ENGINEERS

HASTER RETARDING BASIN (C05802) PUMP STATION

PROPANE STORAGE

Sheet Reference Number

M-14

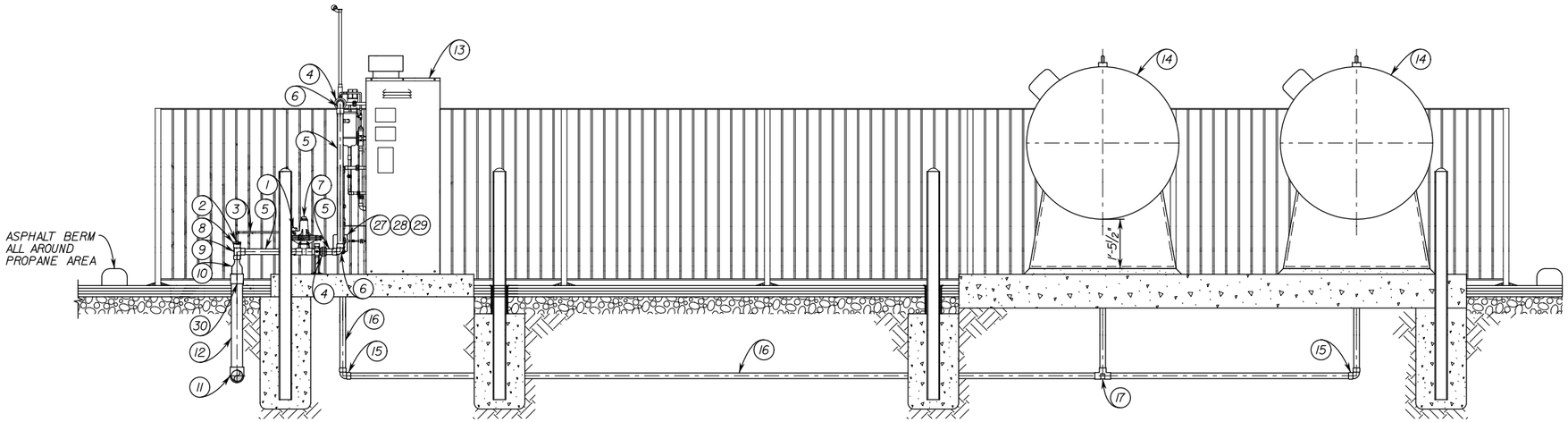

SECTION A/83
SCALE: 1/2" = 1'-0"

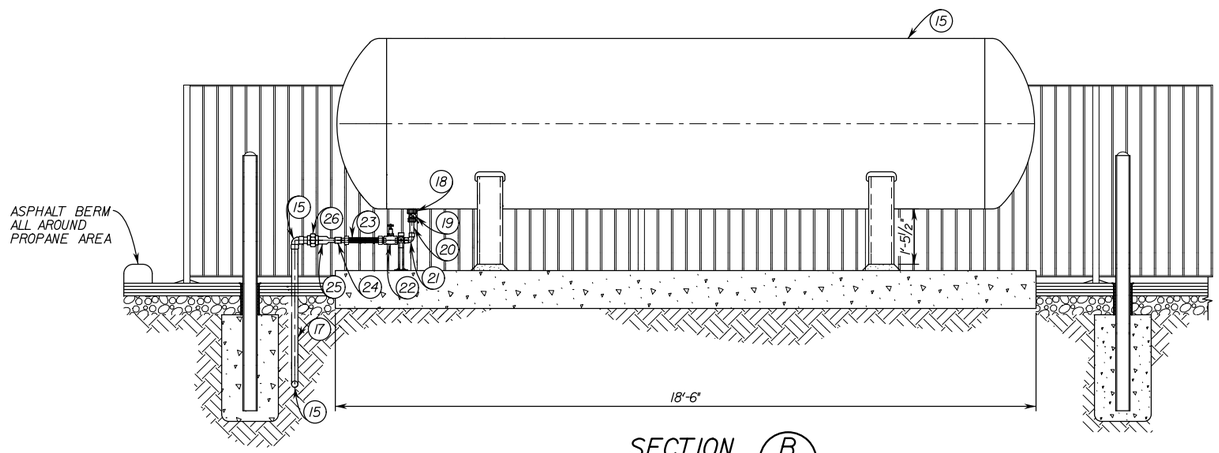

SECTION B/83
SCALE: 1/2" = 1'-0"

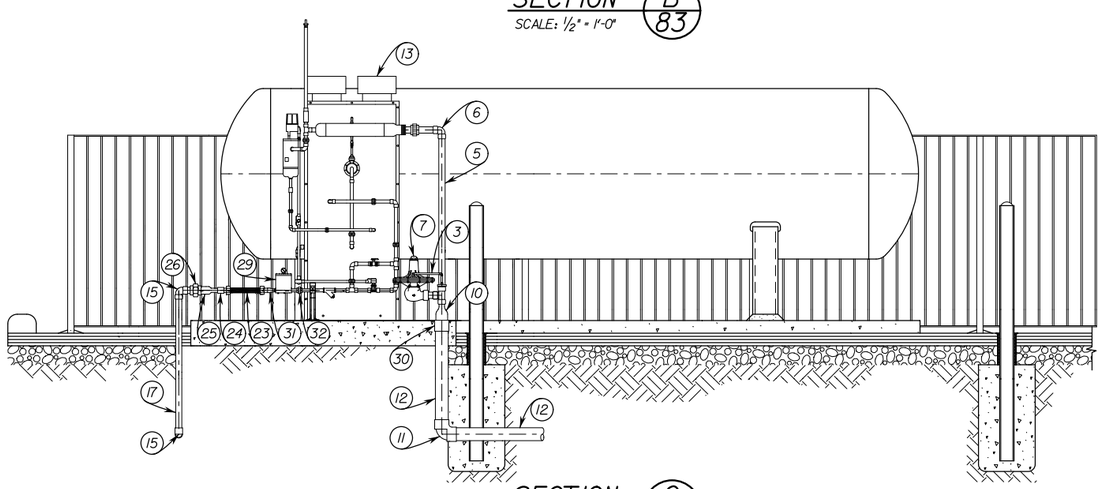

SECTION C/83
SCALE: 1/2" = 1'-0"

NOTE:

1. ALL PIPING TO BE SCH 80 SMLS WITH 3000# FORGE STEEL FITTINGS.
2. ALL UNDERGROUND PIPING TO BE COATED SCH 80 SMLS PIPE PER SPEC

LIST OF MATERIALS

ITEM	DESCRIPTION	SIZE	QTY
1	I.P.S. x 1/2" O.D. TUBING ADAPTOR	1/2"	1
2	I.P.S. x 1/2" O.D. 90 DEGREE TUBING ADAPTOR	1/2"	1
3	O.D. 316 STAINLESS STEEL TUBING	1/2"	3'
4	3000# FORGED STEEL SCREWED UNION	2"	2
5	SCH 80 SEAMLESS PIPE	2"	10'
6	3000# FORGED STEEL SCREW 90 DEG ELL	2"	2
7	FISHER SERIES 99 GAS REGULATOR SET AT 7 P.S.I.	2"	1
8	3000# FORGED STEEL SCREWED BUSHING	1/2" x 2"	1
9	3000# FORGED STEEL SCREWED TEE	2"	1
10	SCH 80 STEEL SWAGE NIPPLE, THREAD SMALL END	2" x 4"	1
11	3000# FORGED STEEL SOCKET WELD 90 DEG ELL	4"	1
12	SCH 80 SEAMLESS PIPE COATED PER SPEC	4"	4'
13	RANSOME RH 400 L.P.G. VAPORIZER		1
14	GALLON L.P.G. TANK	2000	2
15	3000# FORGED STEEL SOCKET WELD 90 DEG ELL	2"	6
16	SCH 80 SEAMLESS PIPE COATED PER SPEC	2"	45'
17	3000# FORGED STEEL SOCKET WELD TEE	2"	1
18	3000# FORGED STEEL SCREWED BUSHING	2" x 1 1/4"	3
19	FISHER C407 SERIES INTERNAL VALVE WITH FLOW CONTROL	1 1/4"	1
20	SCH 80 SEAMLESS PIPE	1 1/4"	3'
21	3000# FORGED STEEL SCREWED 90 DEG ELL	1 1/4"	2
22	FISHER N 310 SERIES GLOBE VALVE	1 1/4"	1
23	BRAIDED STAINLESS STEEL HOSE LISTED FOR LPG WITH THREADED CONNECTIONS	1 1/4" x 18"	1
24	3000# FORGED STEEL SCREWED COUPLING	1 1/4"	1
25	SCH 80 STEEL SWAGE NIPPLE	1 1/4" x 2"	2
26	3000# FORGED STEEL SOCKET WELD UNION	2"	3
27	SCH 80 STEEL SWAGE NIPPLE, THREAD SMALL END	2" x 1"	1
28	3000# FORGED STEEL SCREWED UNION	1"	1
29	35 G.P.M. FILTER (L.P.G.) 300 PSI 35 GPM 5 MICRON	1"	1
30	3000# FORGED STEEL SOCKET WELD COUPLING	4"	1
31	3000# FORGED STEEL SCRD REDUCING COUPLING	1 1/4" x 1"	1
32	3000# FORGED STEEL SCRD UNION	1"	1

COUNTY OF ORANGE CALIFORNIA

MARK	DESCRIPTION	DATE	APPR.

PREPARED UNDER THE RESPONSIBLE CHARGE OF:

REGISTERED PROFESSIONAL ENGINEER JOHN A. LOAGUE No. 50292 Exp. 6/30/09 CIVIL STATE OF CALIFORNIA

DATE

DESIGNED BY: GLEN DEITER
DRAWN BY: CADD
CHECKED BY: JOHN LOAGUE
DRAWING CODE: F06-101-7
FILE NAME:
PLOT DATE: @DATE@
SCALE: AS SHOWN

OC PUBLIC WORKS

PREPARED BY: AKM CONSULTING ENGINEERS

HASTER RETARDING BASIN (C05802) PUMP STATION

PROPANE STORAGE DETAILS

Sheet Reference Number

M-15

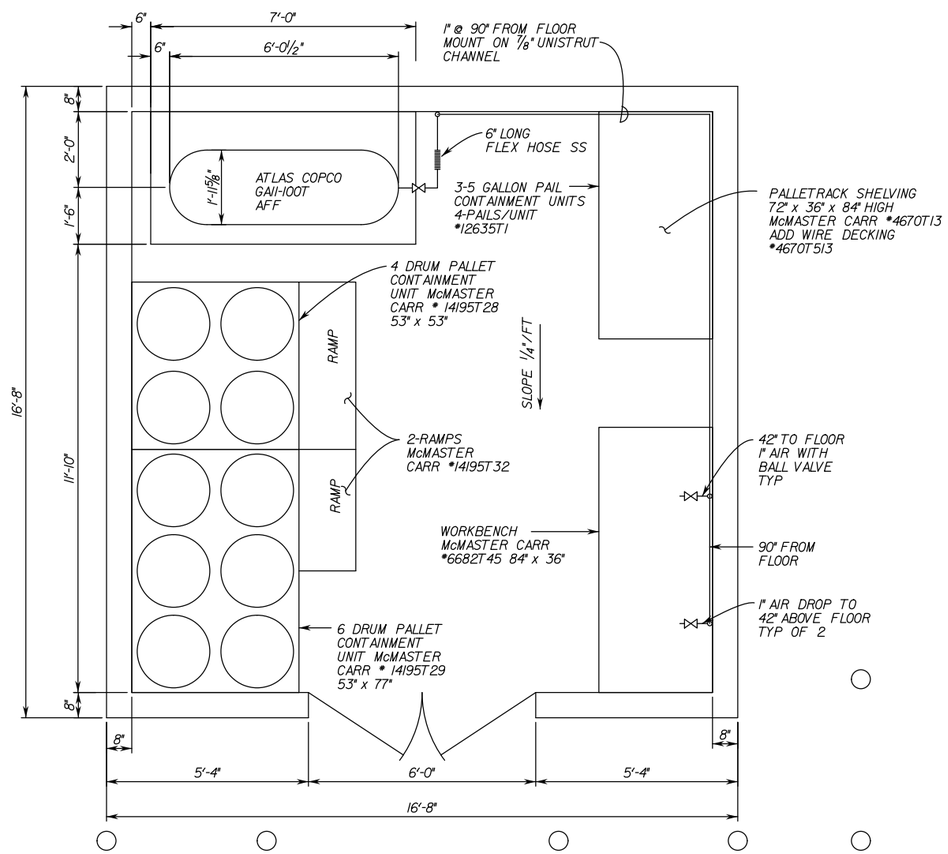

HAZARD HOUSE

SCALE: ½" =1'-0"

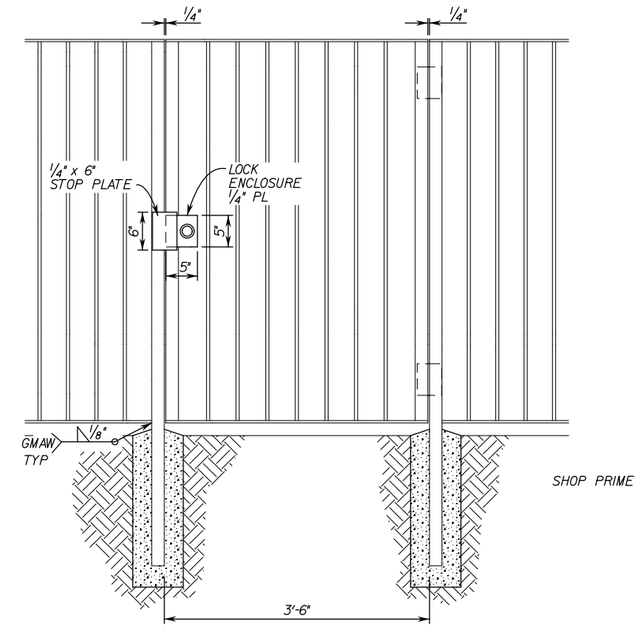

GATE DETAIL

SCALE: 1" =1'-0"

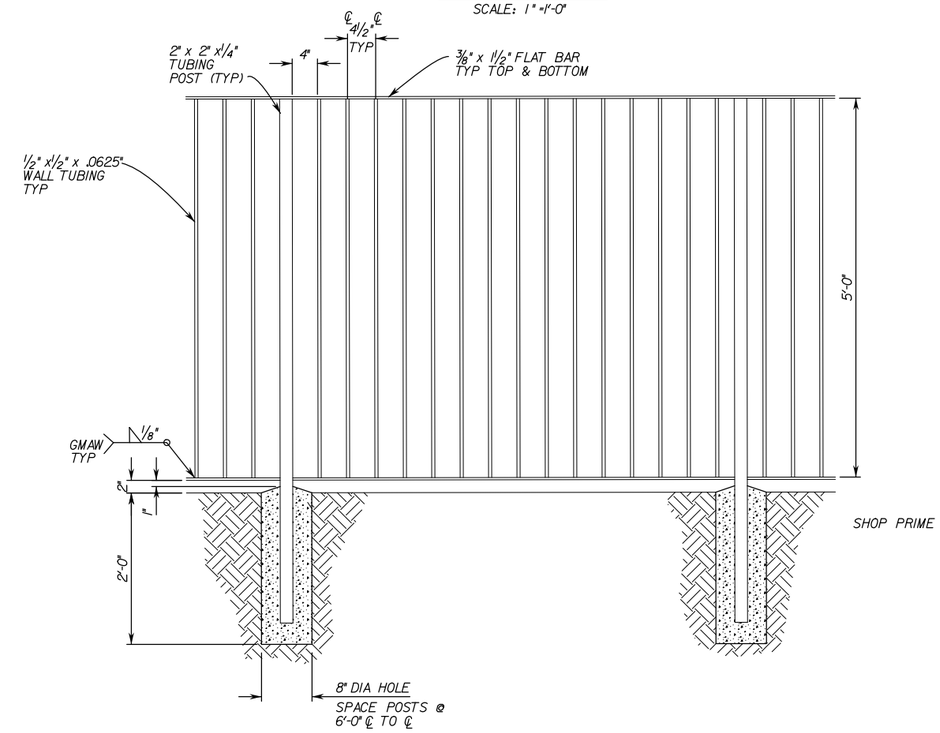

FENCE DETAIL

SCALE: 1" =1'-0"

COUNTY OF ORANGE CALIFORNIA

MARK	DESCRIPTION	DATE	APPR.

PREPARED UNDER THE RESPONSIBLE CHARGE OF:

REGISTERED PROFESSIONAL ENGINEER JOHN A. LOAGUE No. 50292 Exp. 6/30/09 CIVIL STATE OF CALIFORNIA

DATE

DESIGNED BY: GLEN DEITER
DRAWN BY: CADD
CHECKED BY: JOHN LOAGUE
DRAWING CODE: F06-101-7
FILE NAME:
PLOT DATE: #DATE#
SCALE: AS SHOWN

OC PUBLIC WORKS

PREPARED BY: AKM CONSULTING ENGINEERS

HASTER RETARDING BASIN (C05B02) PUMP STATION

HAZARD HOUSE

Sheet Reference Number

M-16

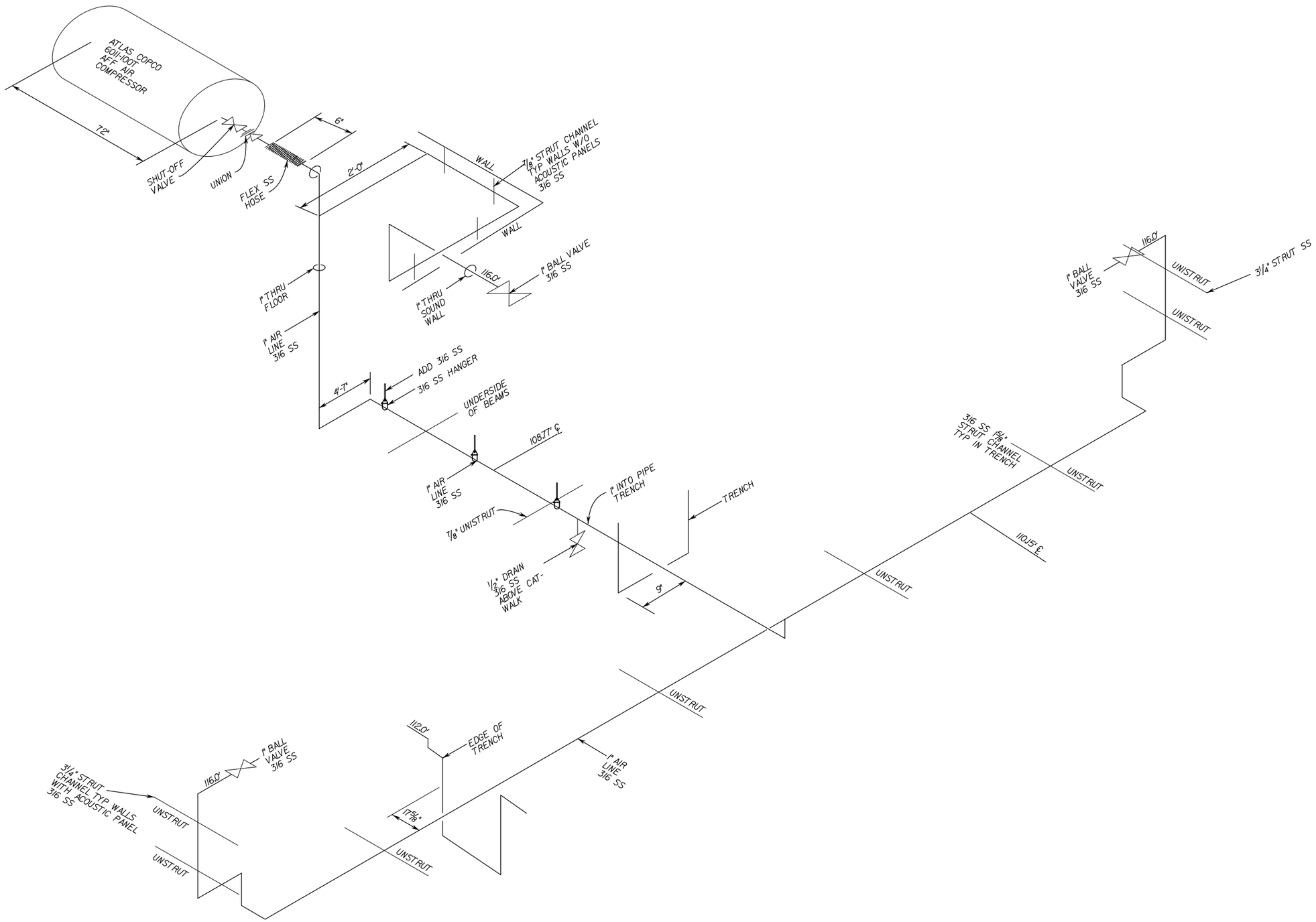

COUNTY OF ORANGE CALIFORNIA

MARK	DESCRIPTION	DATE	APPR.

PREPARED UNDER THE RESPONSIBLE CHARGE OF:

REGISTERED PROFESSIONAL ENGINEER
FOWAD B. MOUNBOUC
No. 060867
Exp. 6/30/10
CIVIL
STATE OF CALIFORNIA

DATE

DESIGNED BY: BLANKENSETTER
DRAWN BY: CADD
CHECKED BY: JOHN LOAGUE
DRAWING CODE: F06-101-7
FILE NAME: -
PLOT DATE: DATE
SCALE: AS SHOWN

OC PUBLIC WORKS

PREPARED BY: AKM CONSULTING ENGINEERS

HASTER RETARDING BASIN
(C05802)
PUMP STATION

ISOMETRIC DIAGRAM
AIR LINES

Sheet Reference Number

M–17

LIST OF SYMBOLS

SYMBOL	DESCRIPTION
	CONDUIT RUN EXPOSED.
	CONDUIT RUN IN FLOOR, SLAB, WALL OR UNDERGROUND.
	FLEXIBLE CONDUIT CONNECTION WITH INTEGRAL GROUND CONDUCTOR
	INCOMING LINE.
	FLUORESCENT LIGHTING FIXTURE. TYPE AND MOUNTING AS NOTED.
S a	SINGLE-POLE TOGGLE SWITCH, 120V, 20A, HUBBLE #1223 "a" DENOTES OUTLETS CONTROLLED BY SWITCH.
S 2	DOUBLE-POLE TOGGLE SWITCH, 120V, 20A HUBBLE #1222.
S M (J) (JB)	MANUAL MOTOR STARTER, 1 HP MAX., 120V WITH OVERLOAD HEATER FOR MOTOR SIZE INDICATED ON PLANS.
WP	DUPLEX CONVENIENCE RECEPTACLE, 2 POLE, 3 WIRE, 120VAC, 20A. MOUNTING HEIGHT AS NOTED. WP = OUTDOOR WEATHERPROOF. GFCI = GROUND FAULT CIRCUIT INTERRUPTER.
	ENCLOSURE TO BE DESCRIBED ON DRAWING.
	SURFACE MOUNTED PANEL.
	LINE DISCONNECT SWITCH. NON-FUSED UNLESS OTHERWISE NOTED. SWITCH RATING AS NOTED ON PLANS OR SPECIFICATIONS. NF = NON-FUSED. F = FUSED.
LOS	CONTROL STATION FOR MOTOR. SEE SCHEMATIC FOR SWITCH ARRANGEMENT. LOS = LOCK-OUT-STOP.
15	ELECTRIC MOTOR, NUMBER INDICATES HORSEPOWER
OR	HASH MARKS INDICATE NUMBER OF #12 AWG CONDUCTORS IN CONDUIT SIZE PER CODE. ARROW INDICATES HOME RUN TO PANEL

SYMBOL	DESCRIPTION
(J) (JB)	JUNCTION BOX. AT ALL OUTDOOR LOCATIONS, BOX SHALL INCLUDE A NEMA 4 ENCLOSURE WITH HUBS FOR ALL CONDUIT ENTRANCES.
▲	DEVICE LOCATED IN FIELD ON OR NEAR PUMP (MOTOR).
	TRANSFORMER. DESCRIPTION AS NOTED ON PLANS OR SPECIFICATIONS.
T	TRANSFORMER.
300AT 400AF	THERMAL MAGNETIC BREAKER. 300 AT INDICATES TRIP AMPS. 400 AF INDICATES FRAME SIZE.
30 *	CIRCUIT BREAKER. UPPER NUMBER IS CONTINUOUS TRIP ELEMENT RATING. * INDICATES FIELD SETTING BASED ON INSTALLED MOTOR.
	FUSE.
(T)	THERMOSTAT. MOUNT AS NOTED ON PLANS.
15 OR 15	SQUIRREL CAGE MOTOR. 15 INDICATES HORSEPOWER.
(M)	POWER COMPANY METERING. SEE PLANS AND SPECIFICATIONS.
	GROUND.
	GROUND WELL.
	NORMALLY OPEN PUSH BUTTON- MOMENTARY TYPE. DOTTED LINE INDICATES DEVICE MOUNTED REMOTE FROM PANEL.
	NORMALLY CLOSED PUSH BUTTON-MOMENTARY TYPE.
LOS	LOCK-OUT-STOP PUSH BUTTON WITH LOCKING DEVICE.
WPFR	NORMALLY OPEN INTERLOCK. LETTERS IDENTIFY RELAY COIL.
WPFR	NORMALLY CLOSED INTERLOCK. LETTERS IDENTIFY RELAY COIL

SYMBOL	DESCRIPTION
WP FR	CONTROL RELAY. LETTERS IN CIRCLE IDENTIFY RELAY COIL
WP CT	TIME DELAY RELAY. LETTERS IN CIRCLE IDENTIFY TIME DELAY RELAY. SEE SCHEMATIC FOR OPERATING PARAMETERS. PROVIDE POWER CONNECTION AS REQUIRED.
NCTO	NORMALLY CLOSED CONTACT TIMED TO OPEN AFTER ENERGIZATION.
NOTC	NORMALLY OPEN CONTACT TIMED TO CLOSE AFTER ENERGIZATION.
NCTC	NORMALLY CLOSED CONTACT. INSTANT OPEN ON ENERGIZATION. TIMED TO CLOSE AFTER DE-ENERGIZATION.
NOTO	NORMALLY OPEN CONTACT. INSTANT CLOSE ON ENERGIZATION. TIMED TO OPEN AFTER DE-ENERGIZATION.
TSH	TEMPERATURE SWITCH. NORMALLY CLOSED.
TSH	TEMPERATURE SWITCH. NORMALLY OPEN.
PSH	PRESSURE SWITCH. OPENS AT HIGH PRESSURE, NORMALLY CLOSED.
PSL	PRESSURE SWITCH. CLOSES AT HIGH PRESSURE, NORMALLY OPEN.
OFF	ON-OFF SWITCH.
R	INDICATING LIGHT. R=RED, G=GREEN, W=WHITE.
	CONDUCTORS-CONNECTED.
	CONDUCTORS- NOT CONNECTED.
RTM	RUN TIME METER.
	SPACE HEATER.
	GROUND ROD 3/4" X 10' COPPERCLAD UNLESS OTHERWISE NOTED.
4	MAGNETIC MOTOR STARTER, NEMA SIZE 4
SS	SOLID STATE STARTER

LIST OF ABBREVIATIONS

A	AMPERE
AC	ALTERNATING CURRENT
A I C	AMPERES INTERRUPTING CAPACITY
ALT	ALTERNATOR
APPROX	APPROXIMATELY
ATS	AUTOMATIC TRANSFER SWITCH
AWG	AMERICAN WIRE GAUGE
BC	BARE COPPER
BKR	BREAKER
BLDG	BUILDING
C	CONDUIT
C & I	CONTROLS & INSTRUMENTATION
CKT	CIRCUIT
CLF	CURRENT LIMITING FUSE
CO	CONDUIT ONLY
COMB	COMBINATION
CONT	CONTROL
CPT	CONTROL POWER TRANSFORMER
CU	COPPER
CVWD	CAPISTRANO VALLEY WATER DISTRICT
DC	DIRECT CURRENT
DISCH	DISCHARGE
DN	DOWN
DPT	DISCHARGE PRESSURE TRANSMITTER
DWG	DRAWING
EF	EXHAUST FAN
FIC	FLOW INDICATOR/CONTROLLER
EL	ELEVATION
EM	EMERGENCY
ESS	ELECTRONIC SOFT START
FE	FLOW TRANSDUCER
FLA	FULL LOAD AMPERES
FLEX	FLEXIBLE
FS	FLOW SWITCH
FT	FOOT
G	GREEN
GEN	GENERATOR SET
GFS	GROUND FAULT SENSOR
GD	GAS DETECTOR
GND	GROUND
HOA	HAND-OFF-AUTOMATIC
HP	HORSEPOWER
HPS	HIGH PRESSURE SWITCH
HZ	HERTZ
INSTR	INSTRUMENTATION
KVA	KILOVOLT AMPERES
KW	KILOWATT
KWH	KILOWATT HOUR
LCL	LEAST COMMON LOAD
LIT	LEVEL INDICATOR TRANSMITTER
LOS	LOCK-OUT STOP
LP	LIGHTING PANEL
LPU	LINE PROTECTION UNIT
LSH	LEVEL SWITCH HIGH
LTG	LIGHTING
LSIG	LONG, SHORT, INSTANTANEOUS, GROUND FAULT
LS	LIMIT SWITCH
M	MOTOR, MAGNETIC STARTER/METER
mA	MILLIAMP
MCC	MOTOR CONTROL CENTER
MCP	MOTOR CIRCUIT PROTECTOR
MH	MANHOLE
MIN	MINIMUM
MTD	MOUNTED
NA	NOT APPLICABLE
N/C	NORMALLY CLOSED
NIC	NOT IN CONTRACT
N/O	NORMALLY OPEN, NUMBER
NTS	NOT TO SCALE
O/L	OVERLOAD
P	POLE, PHASE
PB	PULL BOX, PUSH BUTTON
PI	PRESSURE INDICATOR
PFR	POWER FAIL RELAY
PLC	PROGRAMMABLE LOGIC CONTROLLER
PVC	POLYVINYL CHLORIDE
PRESS	PRESSURE
PSH	PRESSURE SWITCH HIGH
PT	PRESSURE TRANSDUCER
PWR	POWER
REC	RECEPTACLE
RPM	REVOLUTIONS PER MINUTE
RTM	RUNNING TIME METER
RTU	REMOTE TELEMETRY UNIT
SHLD	SHIELDED
SHT	SHEET
SSMC	SOLID STATE MOTOR CONTROLLER
SV	SOLENOID VALVE
TS	TEMPERATURE SWITCH/TORQUE SWITCH
SIGS	SIGNALS
TDR	TIME DELAY RELAY
RTOU	TIME OF USE RELAY
TYP	TYPICAL
TSP	TWISTED SHIELDED PAIR
ULT	ULTRASONIC LEVEL TRANSDUCER
V	VOLT, VOLTMETER
VFD	VARIABLE FREQUENCY DRIVE
W	WATT
WCP	WELL CONTROL PANEL
W/	WITH
WP	WEATHER PROOF
XFMR	TRANSFORMER
XMTR	TRANSMITTER
XP	EXPLOSION PROOF
ZS	POSITION SWITCH (LIMIT SWITCH)

COUNTY OF ORANGE CALIFORNIA

MARK	DESCRIPTION	DATE	APPR.

PREPARED UNDER THE RESPONSIBLE CHARGE OF:

REGISTERED PROFESSIONAL ENGINEER JOHN A. LOAGUE No. 50092 Exp. 6/30/09 CIVIL STATE OF CALIFORNIA

DATE

DESIGNED BY:

DRAWN BY: CADD

CHECKED BY: JOHN LOAGUE

DRAWING CODE: F06-101-7

FILE NAME: -

PLOT DATE: #DATE#

SCALE: AS SHOWN

OC PUBLIC WORKS

PREPARED BY: AKM CONSULTING ENGINEERS

HASTER RETARDING BASIN (C05802) PUMP STATION

ELECTRICAL NOTES

Sheet Reference Number

E-1

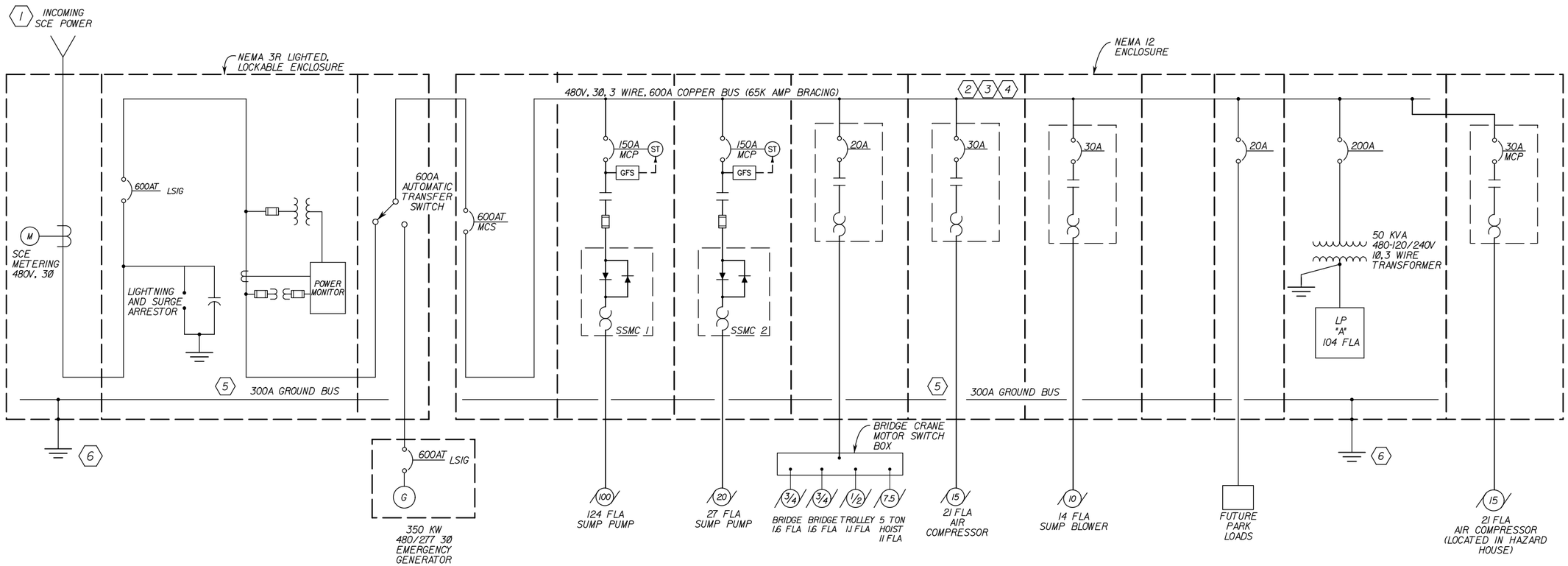

SINGLE LINE DIAGRAM

NOT TO SCALE

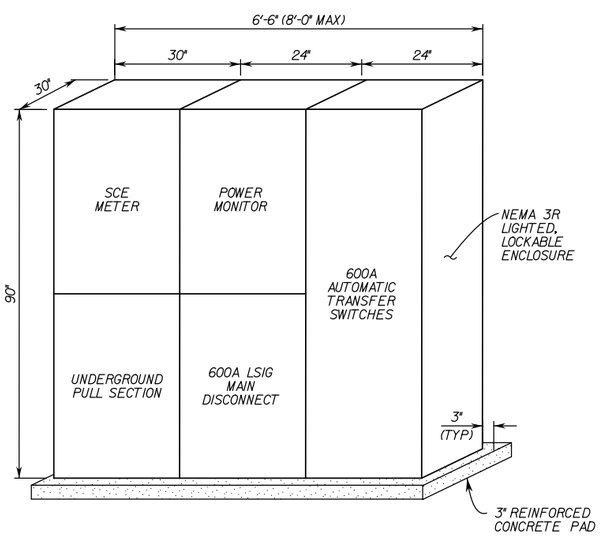

MAIN SWITCHBOARD ELEVATION

NOT TO SCALE

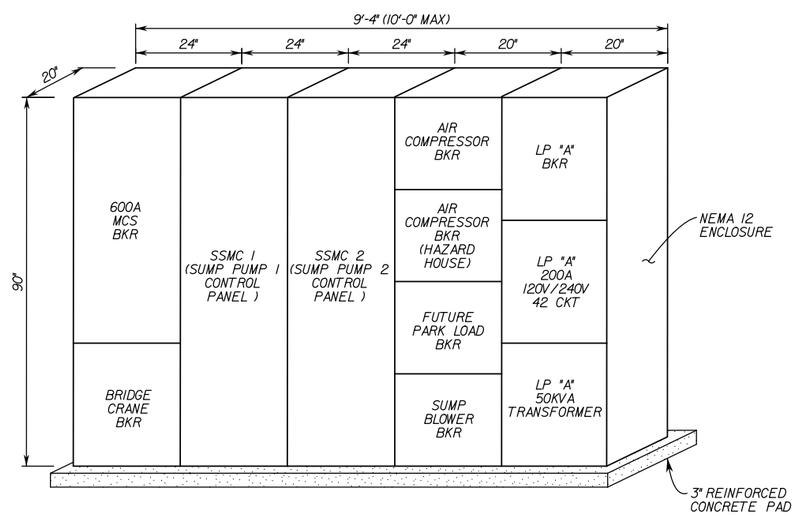

MOTOR CONTROL CENTER ELEVATION

NOT TO SCALE

NOTES:

1. PROVIDE PRIMARY CONDUIT WITH PULL ROPE FROM EXISTING POWER POLE TO NEW TRANSFORMER PER SCE STANDARDS.
2. ALL CIRCUIT BREAKER IN THE MAIN SWITCHBOARD AND THE MOTOR CONTROL CENTER SHALL HAVE AN INTERRUPTING RATING EQUAL TO OR GREATER THAN THE AVAILABLE FAULT CURRENT BUT SHALL NOT BE LESS THAN 30,000 AMPS RMS SYMMETRICAL. VERIFY AVAILABLE FAULT CURRENT WITH SCE.
3. BREAKER TRIP SIZE SHALL BE COORDINATED WITH ACTUAL MOTOR INSTALLED.
4. INSURE ALL LOAD BREAKERS ARE COORDINATED WITH FEEDER BREAKERS. PROVIDE COORDINATION STUDY FOR REVIEW AND APPROVAL BY CITY.
5. PROVIDE 300A GROUND BUS THE FULL LENGTH OF THE ENCLOSURE AND INSTALL UPPER AND GROUND RODS.
6. PROVIDE GROUNDING SYSTEM AS REQUIRED FOR GROUND RESISTANCE OF LESS THAN 5 OHMS.

ELECTRICAL LOAD CALCULATIONS

DESCRIPTION	LOAD
100 HP SUMP PUMP	124A
20 HP SUMP PUMP	27A
BRIDGE CRANE	15A
AIR COMPRESSOR	21A
SUMP BLOWER	14A
AIR COMPRESSOR (HAZARD HOUSE)	21A
FUTURE PARK LOADS	10A
LP "A"	104A
25% OF LARGEST LOAD	31A
TOTAL LOAD	367A

COUNTY OF ORANGE CALIFORNIA

MARK	DESCRIPTION	DATE	APPR.

PREPARED UNDER THE RESPONSIBLE CHARGE OF:

REGISTERED PROFESSIONAL ENGINEER JOHN A. LOAGUE No. 50092 Exp. 6/30/09 CIVIL STATE OF CALIFORNIA

DATE

DESIGNED BY: J. LEE
DRAWN BY: CADD
CHECKED BY: JOHN LOAGUE
DRAWING CODE: F06-101-7
FILE NAME: -
PLOT DATE: $DATE$
SCALE: AS SHOWN

OC PUBLIC WORKS

PREPARED BY: AKM CONSULTING ENGINEERS

HASTER RETARDING BASIN (C05B02) PUMP STATION

SINGLE LINE DIAGRAM

Sheet Reference Number

E-2

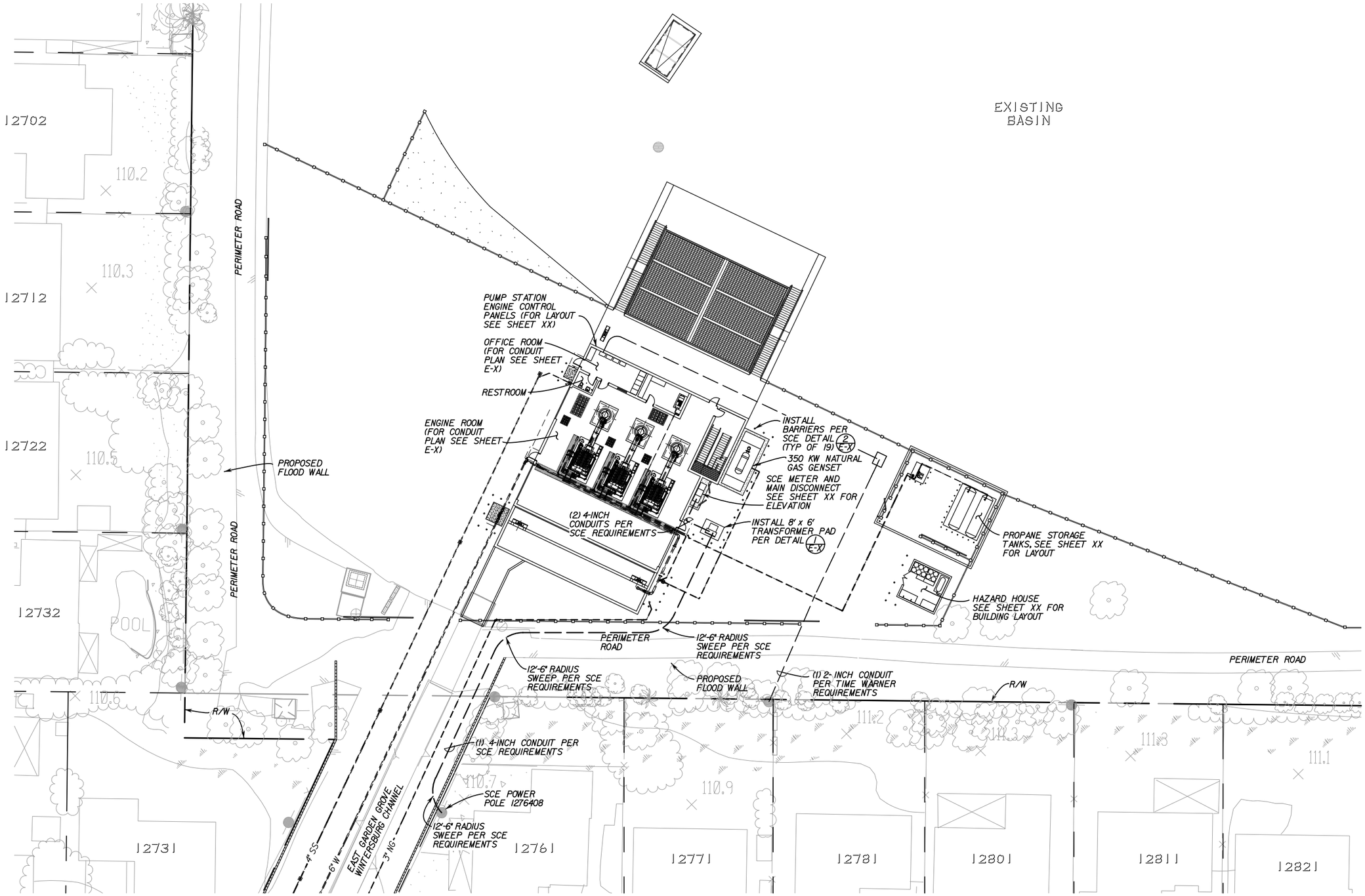

NOTES:

1. CONDUIT PLAN IS DIAGRAMATIC. CONTRACTOR SHALL ROUTE CONDUITS AS NECESSARY FOR FIELD CONDITIONS.
2. CONTRACTOR SHALL PROVIDE PULL BOXES AS REQUIRED FOR INSTALLATION OF WIRING SYSTEM.
3. ALL BURIED CONDUITS SHALL BE CONCRETE ENCASED PER DETAIL X/X
4. SEE CONTRACT SPECIFICATIONS FOR SCE AND TIME WARNER SERVICE PLAN.

COUNTY OF ORANGE CALIFORNIA

MARK	DESCRIPTION	DATE	APPR.

PREPARED UNDER THE RESPONSIBLE CHARGE OF:

REGISTERED PROFESSIONAL ENGINEER JOHN A. LOAGUE No. 50092 Exp. 6/30/09 CIVIL STATE OF CALIFORNIA

DATE

DESIGNED BY:

DRAWN BY: CADD

CHECKED BY: JOHN LOAGUE

DRAWING CODE: F06-101-7

FILE NAME: -

PLOT DATE: DATE$

SCALE: AS SHOWN

OC PUBLIC WORKS

PREPARED BY: AGI CONSULTING ENGINEERS

HASTER RETARDING BASIN (C05B02) PUMP STATION

ELECTRICAL SITE PLAN

Sheet Reference Number

E-3

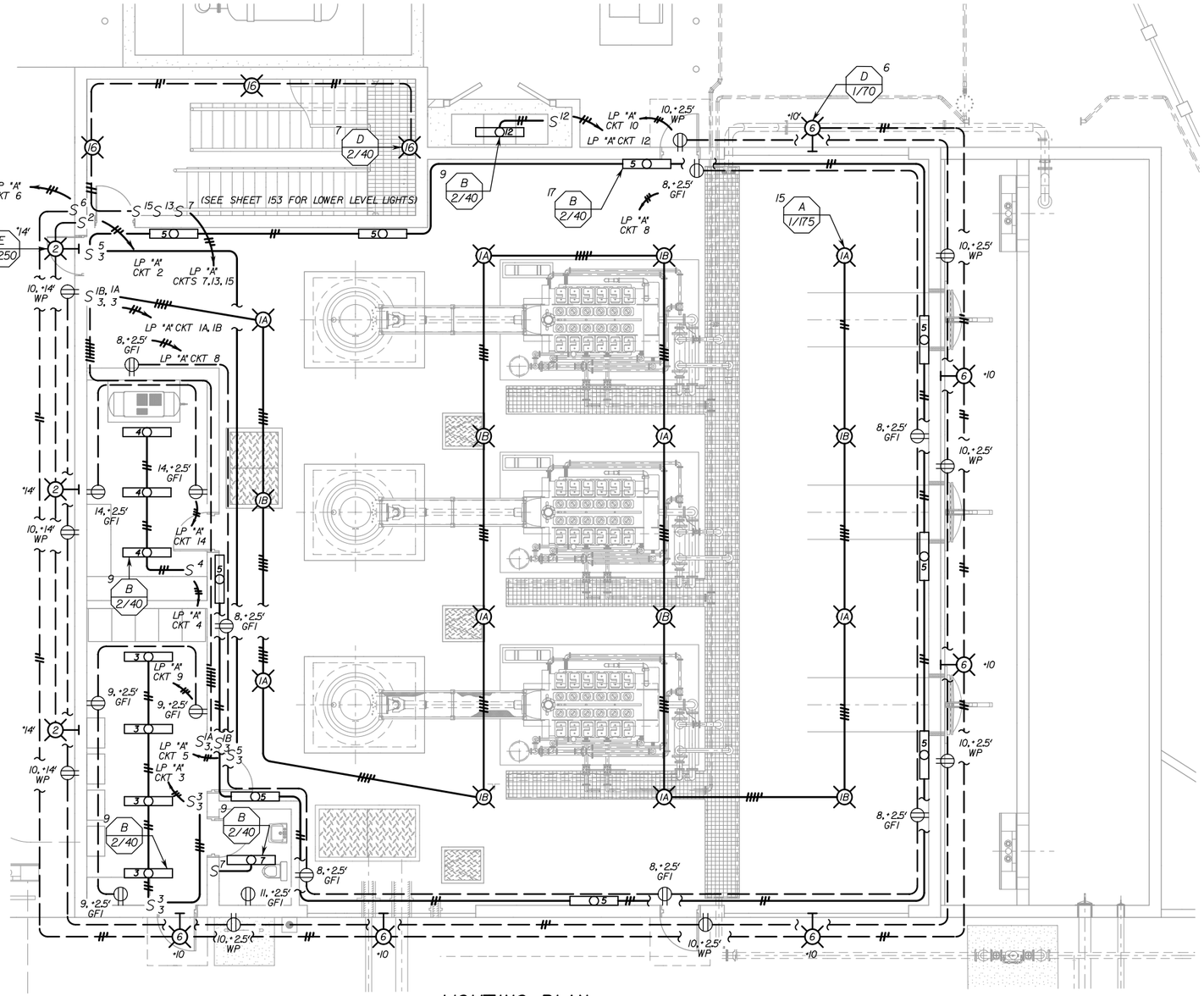

LIGHTING PLAN

SCALE: 3/16" = 1'-0"

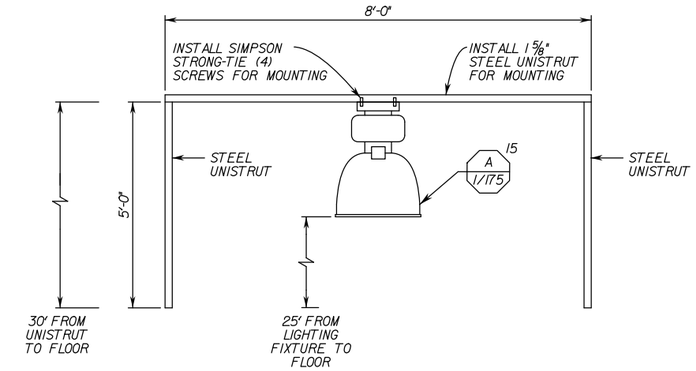

HIGHBAY LIGHT MOUNTING DETAIL 1/--

NOT TO SCALE

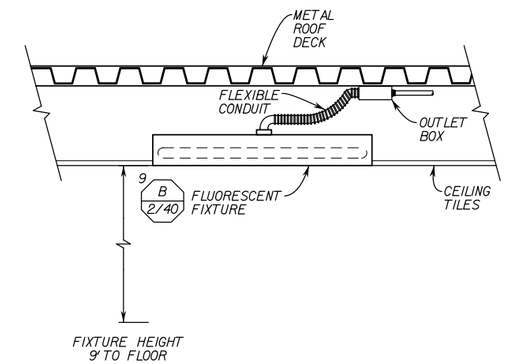

RECESSED FLUORESCENT FIXTURE MOUNTING DETAIL 2/--

NOT TO SCALE

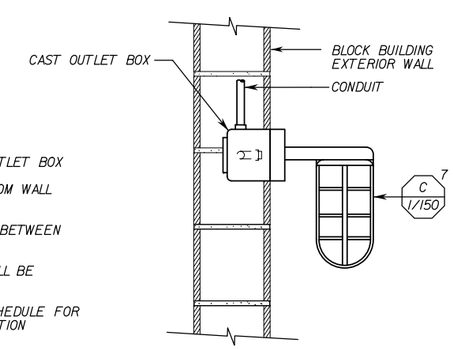

NOTES:

1. PROVIDE CAST OUTLET BOX
2. SET BOX OUT FROM WALL AS SHOWN
3. PROVIDE GASKET BETWEEN BOX AND FIXTURE
4. INSTALLATION SHALL BE WATER-TIGHT
5. SEE FIXTURE SCHEDULE FOR FIXTURE DESCRIPTION

WALL MOUNTED STAIRCASE FIXTURE DETAIL 3/--

NOT TO SCALE

MARK	VOLTAGE	DESCRIPTION	DETAIL
A 1/175	120 VAC	CEILING FIX, 19" SPUN ALUMINUM REFLECTOR. RUGGED TWO-PIECE, DIE CAST ALUMINUM BALLAST HOUSING WITH CORROSION-RESISTANT LECKTROCOTE WITH A FUNISH. HUBBELL SERIES HUBBELL SERIES BL-175-W-8-SD-WH.	1/--
B 2/40	120 VAC	4' FLUORESCENT 2-LAMP SEALED & GASKETED SUITABLE FOR WET LOCATIONS CEILING MOUNTED CORROSION RESISTANT INDUSTRIAL GRADE. HUBBEL DMR SERIES EDS042R-PACA-EI	2/--
C 1/150	120 VAC	WALL MOUNTED, 150 WATT INCANDESCENT LIGHT WITH ALUMINUM WALL BRACKET AND WIRING BOX, UL 1593 FOR USE IN WET LOCATION (HUBBELL VAPORTITES VWGG-150)	3/--

MARK	VOLTAGE	DESCRIPTION	DETAIL
D 1/70	120 VAC	WALL MOUNTED, 70 WATT HPS LAMP WEATHERPROOF, VANDAL PROOF, CORROSION RESISTANT WITH PHOTO SWITCH, HUBBLE PERIMALITER SERIES-0070S-5II	1/E-4
E 2/40	120 VAC	WALL MOUNTED 4' FLUORESCENT 2 LAMP FIXTURE, NEC/CEC/ADA COMPLIANT HUBBLE SLIM WALL MOUNT LIGHT SERIES W4-232-EU	2/E-4
F 1/250	120 VAC	CEILING FIXED, 250 WATT HIGH PRESSURE SODIUM FLOODLIGHT, NEMA 4X, IP66/67 RATED, HUBBELL MARINER™ FLOODLIGHT SERIES SFMZ-25-5-5	3/E-4

LIGHTING FIXTURE SCHEDULE

COUNTY OF ORANGE CALIFORNIA

MARK	DESCRIPTION	DATE	APPR.

PREPARED UNDER THE RESPONSIBLE CHARGE OF:

REGISTERED PROFESSIONAL ENGINEER JOHN A. LOAGUE No. 50292 Exp. 6/30/09 CIVIL STATE OF CALIFORNIA

DATE

DESIGNED BY: J. LEE
DRAWN BY: CADD
CHECKED BY: JOHN LOAGUE
DRAWING CODE: F06-101-7
FILE NAME: -
PLOT DATE: @DATE@
SCALE: AS SHOWN

OC PUBLIC WORKS

PREPARED BY: AKM CONSULTING ENGINEERS

HASTER RETARDING BASIN (C05802) PUMP STATION

LIGHTING PLAN

Sheet Reference Number

E-4

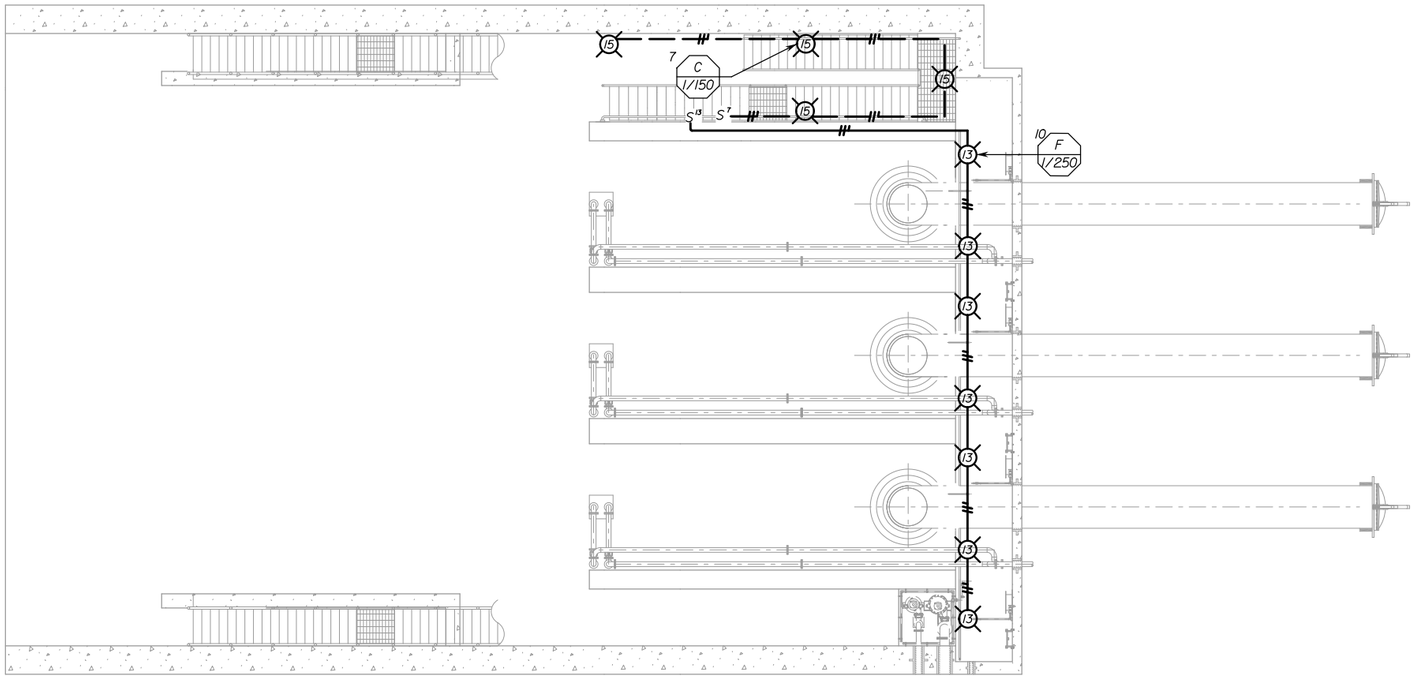

LOWER LEVEL LIGHTING PLAN

SCALE: 3/16" = 1'-0"

NOTES:

1. PROVIDE CAST OUTLET BOX
2. SET BOX OUT FROM WALL AS SHOWN
3. PROVIDE GASKET BETWEEN BOX AND FIXTURE
4. INSTALLATION SHALL BE WATER-TIGHT
5. SEE FIXTURE SCHEDULE FOR FIXTURE DESCRIPTION

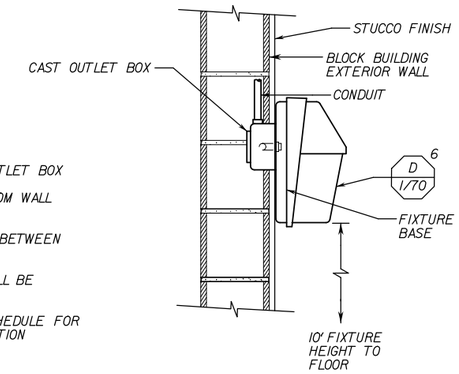

WALL MOUNTED EXTERIOR FIXTURE DETAIL 1/--

NOT TO SCALE

NOTES:

1. PROVIDE CAST OUTLET BOX
2. SET BOX OUT FROM WALL AS SHOWN
3. PROVIDE GASKET BETWEEN BOX AND FIXTURE
4. INSTALLATION SHALL BE WATER-TIGHT
5. SEE FIXTURE SCHEDULE FOR FIXTURE DESCRIPTION

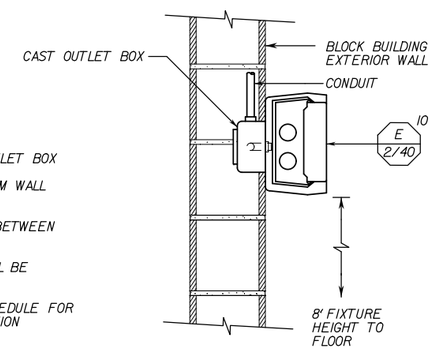

WALL MOUNTED FLUORESCENT FIXTURE DETAIL 2/--

NOT TO SCALE

PANEL "A" SCHEDULE

PANEL NAME LP "A" — MAIN 200A CB

240/120 VOLTS 1 PHASE 3 WIRE — BUS 200 AMP

WATTAGE Ø A	WATTAGE Ø B	DESCRIPTION	REC	LTG	POLE	BKR	CIR	A	B	CIR	BKR	POLE	LTG	REC	DESCRIPTION	WATTAGE Ø A	WATTAGE Ø B
2625		ENGINE ROOM HIGHBAY LIGHTS		15	1	30	1			2	15	1	3		FOREBAY LIGHTS	750	
	400	OFFICE LIGHTS		4	1	15	3			4	15	1	3		STORAGE LIGHTS		300
1000		ENGINE ROOM FLUORESCENT LIGTHS		10	1	15	5			6	15	1	6		EXTERIOR LIGHTS	500	
	100	RESTROOM LIGHTS			1	15	7			8	20	1		7	ENGINE ROOM RECEPTACLES		1260
480		OFFICE RECEPTACLES	3		1	15	9			10	20	1		9	EXTERIOR RECEPTACLES	1620	
	180	RESTROOM RECEPTACLES	1		1	15	11			12	15	1	1		ELECTRICAL ROOM LIGHTS		100
1750		SUMP FLOODLIGHTS		7	1	20	13			14	15	1		2	STORAGE ROOM RECEPTACLES	360	
	600	LOWER STAIRCASE LIGHTS		4	1	15	15			16	20	1	3		UPPER STAIRCASE LIGHTS		450
-		SPARE			1	15	17			18	15	1			SPARE	-	
	-	SPARE			1	20	19			20	20	1			SPARE		-
-		SPARE			1	20	21			22	15	1			SPARE	-	
	-	SPARE			1	20	23			24	15	1			SPARE		-
-		SPARE			1	15	25			26	15	1			SPARE	-	
	-	SPARE			1	20	27			28	20	1			SPARE		-
-		SPARE			1	15	29			30	15	1			SPARE	-	
	-	SPARE			1	15	31			32	15	1			SPARE		-
-		SPARE			1	15	33			34	15	1			SPARE	-	
	-	SPARE			1	15	35			36	15	1			SPARE		-
-		SPARE			1	15	37			38	15	1			SPARE	-	
	-	SPARE			1	15	39			40	15	1			SPARE		-
-		SPARE			1	15	41			42	15	1			SPARE	-	
5855	1280								WATTS/LINE							3230	2110

TOTAL WATTS = 12,475 — AMPS = 52.0

MARK	VOLTAGE	DESCRIPTION	DETAIL
C 1/150	120 VAC	WALL MOUNTED, 150 WATT INCANDESCENT LIGHT WITH ALUMINUM WALL BRACKET AND WIRING BOX, UL 1593 FOR USE IN WET LOCATION (HUBBELL VAPORTITES VWGG-150)	3/E-3
F 1/250	120 VAC	CEILING FIXED, 250 WATT HIGH PRESSURE SODIUM FLOODLIGHT, NEMA 4X, IP66/67 RATED, HUBBELL MARINER™ FLOODLIGHT SERIES SFMZ-25-5-5	3/--

LIGHTING FIXTURE SCHEDULE

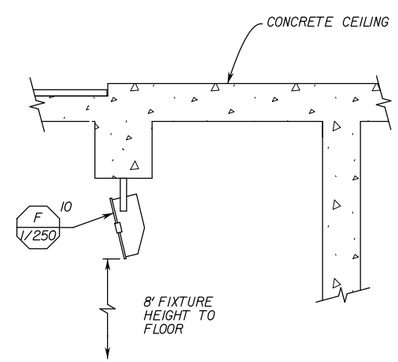

SUMP LIGHTING

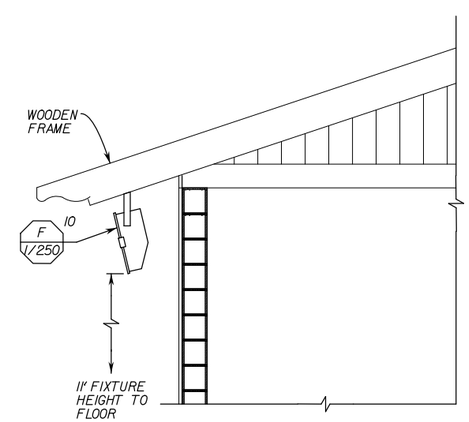

FOREBAY LIGHTING

FLOODLIGHT MOUNTING DETAIL 3/--

NOT TO SCALE

COUNTY OF ORANGE CALIFORNIA

MARK	DESCRIPTION	DATE	APPR.

PREPARED UNDER THE RESPONSIBLE CHARGE OF:

REGISTERED PROFESSIONAL ENGINEER JOHN A. LOAGUE No. 50092 Exp. 6/30/09 CIVIL STATE OF CALIFORNIA

DATE

DESIGNED BY: J. LEE
CHECKED BY: JOHN LOAGUE
DRAWN BY: CADD
DRAWING CODE: F06-101-7
FILE NAME: -
PLOT DATE: $DATE$
SCALE: AS SHOWN

OC PUBLIC WORKS

PREPARED BY: AGI CONSULTING ENGINEERS

HASTER RETARDING BASIN (C05B02) PUMP STATION

LIGHTING PLAN LOWER LEVEL

Sheet Reference Number

E-5

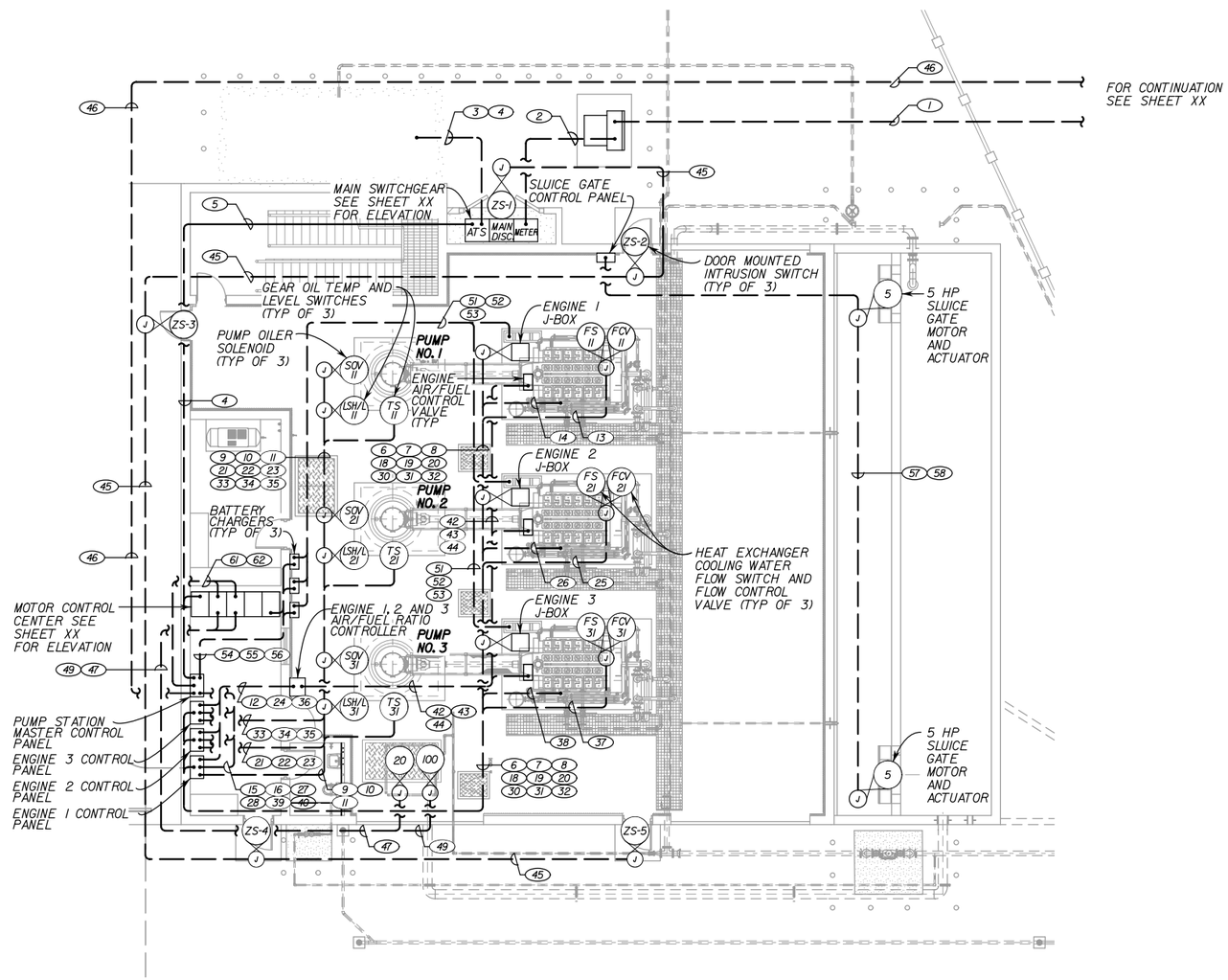

POWER PLAN (TOP FLOOR)

SCALE: 1/8" = 1'-0"

CONDUIT SCHEDULE

CONDUIT NO.	CONDUIT SIZE	CABLE QTY	CABLE SIZE	FROM	TO	REMARKS
1	4"	PULL ROPE PROVIDED BY SCE		SERVICE POLE	SCE TRANSFORMER	PULL ROPE ONLY, CABLE BY SCE
2	(2) 4"	CABLE PROVIDED BY SE		SCE TRANSFORMER	SCE METER	480V, 3Ø POWER, GROUND
3	2 1/2"	6, 2	*4/0, 1	GENERATOR	AUTOMATIC TRANSFER SWITCH	480V, 3Ø POWER, GROUND
4	1"	4	*12	AUTOMATIC TRANSFER SWITCH	GENERATOR CONTROL PANEL	CONTROLS
5	2 1/2"	6, 2	*4/0, 1	AUTOMATIC TRANSFER SWITCH	MCC	480V, 3Ø POWER, GROUND
6	1"	2	*8	ENGINE 1 CONTROL PANEL	ENGINE 1 JUNCTION BOX	24 VDC POWER
7	1"	1	*16 TSP	ENGINE 1 CONTROL PANEL	ENGINE 1 JUNCTION BOX	SIGNAL (TACHOMETER)
8	1"	6	*12	ENGINE 1 CONTROL PANEL	ENGINE 1 JUNCTION BOX	24 VDC POWER, SIGNAL
9	1"	2	*12	ENGINE 1 CONTROL PANEL	ENGINE 1 PUMP OILER SOLENOID VALVE	24 VDC POWER
10	1"	1	*16 TSP	ENGINE 1 RIGHT ANGLE GEAR DRIVE GEAR OIL LEVEL SWITCHGAGE	ENGINE 1 CONTROL PANEL	SIGNAL (GEAR OIL LEVEL)
11	1 1/2"	-	-	ENGINE 1 RIGHT ANGLE GEAR DRIVE TEMPERATURE SENSOR	ENGINE 1 CONTROL PANEL	CONDUIT FOR SWITCHGAGE CAPILLARY TUBES (OIL PRESSURE VACUUM, COOLANT TEMP)
12	1"	2	*12	ENGINE 1 CONTROL PANEL	ENGINE 1 AIR/FUEL RATIO CONTROLLER	24 VDC POWER
13	1"	2, 2	*12, *12	ENGINE 1 CONTROL PANEL	ENGINE 1 HEAT EXCHANGER FLOW SWITCH AND FLOW CONTROL VALVE	24 VDC (FLOW CONTROL VALVE), SIGNAL (FLOW SWITCH)
14	2 1/2"	-	-	ENGINE 1 CONTROL PANEL	ENGINE 1	CONDUIT FOR SWITCHGAGE CAPILLARY TUBES (OIL PRESSURE VACUUM, COOLANT TEMP)
15	1 1/2"	18	*12	ENGINE 1 CONTROL PANEL	PUMP STATION MASTER CONTROL PANEL	SIGNAL (ENGINE RPM)
16	1"	1	*16 TSP	PUMP STATION MASTER PUMP CONTROL PANEL	ENGINE 1 CONTROL PANEL	SIGNAL
17	-	-	-	-	-	-
18	1"	2	*8	ENGINE 2 CONTROL PANEL	ENGINE 2 JUNCTION BOX	24 VDC POWER
19	1"	1	*16 TSP	ENGINE 2 CONTROL PANEL	ENGINE 2 JUNCTION BOX	SIGNAL (TACHOMETER)
20	1"	6	*12	ENGINE 2 CONTROL PANEL	ENGINE 2 JUNCTION BOX	24 VDC POWER, SIGNAL
21	1"	2	*12	ENGINE 2 CONTROL PANEL	ENGINE 2 PUMP OILER SOLENOID VALVE	24 VDC POWER
22	1"	-	*16 TSP	ENGINE 2 RIGHT ANGLE GEAR DRIVE GEAR OIL LEVEL SWITCHGAGE	ENGINE 2 CONTROL PANEL	SIGNAL (GEAR OIL LEVEL)
23	1 1/2"	-	-	ENGINE 2 RIGHT ANGLE GEAR DRIVE TEMPERATURE SENSOR	ENGINE 2 CONTROL PANEL	CONDUIT FOR SWITCHGAGE CAPILLARY TUBES (OIL PRESSURE VACUUM, COOLANT TEMP)
24	1"	2	*12	ENGINE 2 CONTROL PANEL	ENGINE 2 AIR/FUEL RATIO CONTROLLER	24 VDC POWER
25	1"	2, 2	*12, *12	ENGINE 2 CONTROL PANEL	ENGINE 2 HEAT EXCHANGER FLOW SWITCH AND FLOW CONTROL VALVE	24 VDC (FLOW CONTROL VALVE), SIGNAL (FLOW SWITCH)
26	2 1/2"	-	-	ENGINE 2 CONTROL PANEL	ENGINE 2	CONDUIT FOR SWITCHGAGE CAPILLARY TUBES (OIL PRESSURE VACUUM, COOLANT TEMP)
27	1 1/2"	18	*12	ENGINE 2 CONTROL PANEL	PUMP STATION MASTER CONTROL PANEL	SIGNAL (ENGINE RPM)
28	1"	1	*16 TSP	PUMP STATION MASTER PUMP CONTROL PANEL	ENGINE 2 CONTROL PANEL	SIGNAL
29	-	-	-	-	-	-
30	1"	2	*8	ENGINE 3 CONTROL PANEL	ENGINE 3 JUNCTION BOX	24 VDC POWER
31	1"	1	*16 TSP	ENGINE 3 CONTROL PANEL	ENGINE 3 JUNCTION BOX	SIGNAL (TACHOMETER)
32	1"	6	*12	ENGINE 3 CONTROL PANEL	ENGINE 3 JUNCTION BOX	24 VDC POWER, SIGNAL
33	1"	2	*12	ENGINE 3 CONTROL PANEL	ENGINE 3 PUMP OILER SOLENOID VALVE	24 VDC POWER
34	1"	1	*16 TSP	ENGINE 3 RIGHT ANGLE GEAR DRIVE GEAR OIL LEVEL SWITCHGAGE	ENGINE 3 CONTROL PANEL	SIGNAL (GEAR OIL LEVEL)
35	1 1/2"	-	-	ENGINE 3 RIGHT ANGLE GEAR DRIVE TEMPERATURE SENSOR	ENGINE 3 CONTROL PANEL	CONDUIT FOR SWITCHGAGE CAPILLARY TUBES (OIL PRESSURE VACUUM, COOLANT TEMP)
36	1"	2	*12	ENGINE 3 CONTROL PANEL	ENGINE 3 AIR/FUEL RATIO CONTROLLER	24 VDC POWER
37	1"	2, 2	*12, *12	ENGINE 3 CONTROL PANEL	ENGINE 3 HEAT EXCHANGER FLOW SWITCH AND FLOW CONTROL VALVE	24 VDC (FLOW CONTROL VALVE), SIGNAL (FLOW SWITCH)
38	2 1/2"	-	-	ENGINE 3 CONTROL PANEL	ENGINE 3	CONDUIT FOR SWITCHGAGE CAPILLARY TUBES (OIL PRESSURE VACUUM, COOLANT TEMP)
39	1 1/2"	18	*12	ENGINE 3 CONTROL PANEL	PUMP STATION MASTER CONTROL PANEL	SIGNAL (ENGINE RPM)
40	1"	1	*16 TSP	PUMP STATION MASTER PUMP CONTROL PANEL	ENGINE 3 CONTROL PANEL	SIGNAL
41	-	-	-	-	-	-
42	1"	CABLE PROVIDED WITH CONTROLLER		ENGINE 1 AIR/FUEL RATIO CONTROLLER	ENGINE 1 AIR/FUEL CONTROL VALVE	CONTROL VALVE CABLE FURNISHED WITH AIR/FUEL RATIO CONTROLLER
43	1"	CABLE PROVIDED WITH CONTROLLER		ENGINE 2 AIR/FUEL RATIO CONTROLLER	ENGINE 2 AIR/FUEL CONTROL VALVE	CONTROL VALVE CABLE FURNISHED WITH AIR/FUEL RATIO CONTROLLER
44	1"	CABLE PROVIDED WITH CONTROLLER		ENGINE 3 AIR/FUEL RATIO CONTROLLER	ENGINE 3 AIR/FUEL CONTROL VALVE	CONTROL VALVE CABLE FURNISHED WITH AIR/FUEL RATIO CONTROLLER
45	1"	2	*12	DOOR MOUNTED INTRUSION ALARM	PUMP STATION MASTER CONTROL PANEL	INTRUSION SIGNAL
46	2"	PULL ROPE		TELEPHONE SERVICE POLE	PUMP STATION MASTER CONTROL PANEL	CABLE PROVIDED BY TIME WARNER (INSTALL PER TIME WARNER REQUIREMENTS)
47	2"	3, 1	*2/0, 6	SUMP PUMP 1 SSMC	SUMP PUMP 1	480V, 3Ø POWER, GROUND
48	1"	5	*12	SUMP PUMP 1	SUMP PUMP 1 SSMC	JACKETED CONTROL CABLE SUPPLIED WITH PUMP (MOTOR TEMP, SEAL FAIL)
49	2"	3, 1	*10, *12	SUMP PUMP 2 SSMC	SUMP PUMP 2	480V, 3Ø POWER, GROUND
50	1"	5	*12	SUMP PUMP 2	SUMP PUMP 2 SSMC	JACKETED CONTROL CABLE SUPPLIED WITH PUMP (MOTOR TEMP, SEAL FAIL)
51	1"	2	*8	ENGINE 1 BATTERY CHARGER	ENGINE 1 BATTERY	24 VDC POWER
52	1"	2	*8	ENGINE 2 BATTERY CHARGER	ENGINE 2 BATTERY	24 VDC POWER
53	1"	2	*8	ENGINE 3 BATTERY CHARGER	ENGINE 3 BATTERY	24 VDC POWER
54	1"	2	*12	ENGINE 1 BATTERY CHARGER	PUMP STATION MASTER CONTROL PANEL	LOW BATTERY SIGNAL
55	1"	2	*12	ENGINE 2 BATTERY CHARGER	PUMP STATION MASTER CONTROL PANEL	LOW BATTERY SIGNAL
56	1"	2	*12	ENGINE 3 BATTERY CHARGER	PUMP STATION MASTER CONTROL PANEL	LOW BATTERY SIGNAL
57	1 1/2"	-	-	SLUICE GATE 1 ACTUATOR	SLUICE GATE CONTROL PANEL	CONTROLS (GATE OPEN, CLOSE)
58	1 1/2"	-	-	SLUICE GATE 2 ACTUATOR	SLUICE GATE CONTROL PANEL	CONTROLS (GATE OPEN, CLOSE)
59	1"	2	*16 TSP	SLUICE GATE 1 POSITION ENCODER	PUMP STATION MASTER CONTROL PANEL	SLUICE GATE 1 POSITION SIGNAL (% OPEN), AND POWER
60	1"	2	*16 TSP	SLUICE GATE 2 POSITION ENCODER	PUMP STATION MASTER CONTROL PANEL	SLUICE GATE 2 POSITION SIGNAL (% OPEN), AND POWER
61	1"	6	*12	SUMP PUMP CONTROL PANEL	PUMP STATION MASTER CONTROL PANEL	SIGNALS (SUMP PUMP 1 CALL, SUMP PUMP 1 RUN, SUMP PUMP 1 FAIL)
62	1"	6	*12	SUMP PUMP CONTROL PANEL	PUMP STATION MASTER CONTROL PANEL	SIGNALS (SUMP PUMP 2 CALL, SUMP PUMP 2 RUN, SUMP PUMP 2 FAIL)
63	-	-	-	-	-	-
64	-	-	-	-	-	-
65	-	-	-	-	-	-
66	-	-	-	-	-	-
67	-	-	-	-	-	-
68	-	-	-	-	-	-
69	-	-	-	-	-	-
70	-	-	-	-	-	-

COUNTY OF ORANGE CALIFORNIA

MARK	DESCRIPTION	DATE	APPR.

PREPARED UNDER THE RESPONSIBLE CHARGE OF:

REGISTERED PROFESSIONAL ENGINEER JOHN A. LOAQUE No. 50092 Exp. 6/30/09 CIVIL STATE OF CALIFORNIA

DATE

DESIGNED BY:
DRAWN BY: CADD
CHECKED BY: JOHN LOAQUE
DRAWING CODE: F06-101-7
FILE NAME: -
PLOT DATE: $DATE$
SCALE: AS SHOWN

OC PUBLIC WORKS

PREPARED BY: AGI CONSULTING ENGINEERS

HASTER RETARDING BASIN (C05B02) PUMP STATION

POWER PLAN (TOP PLAN)

Sheet Reference Number

E-6

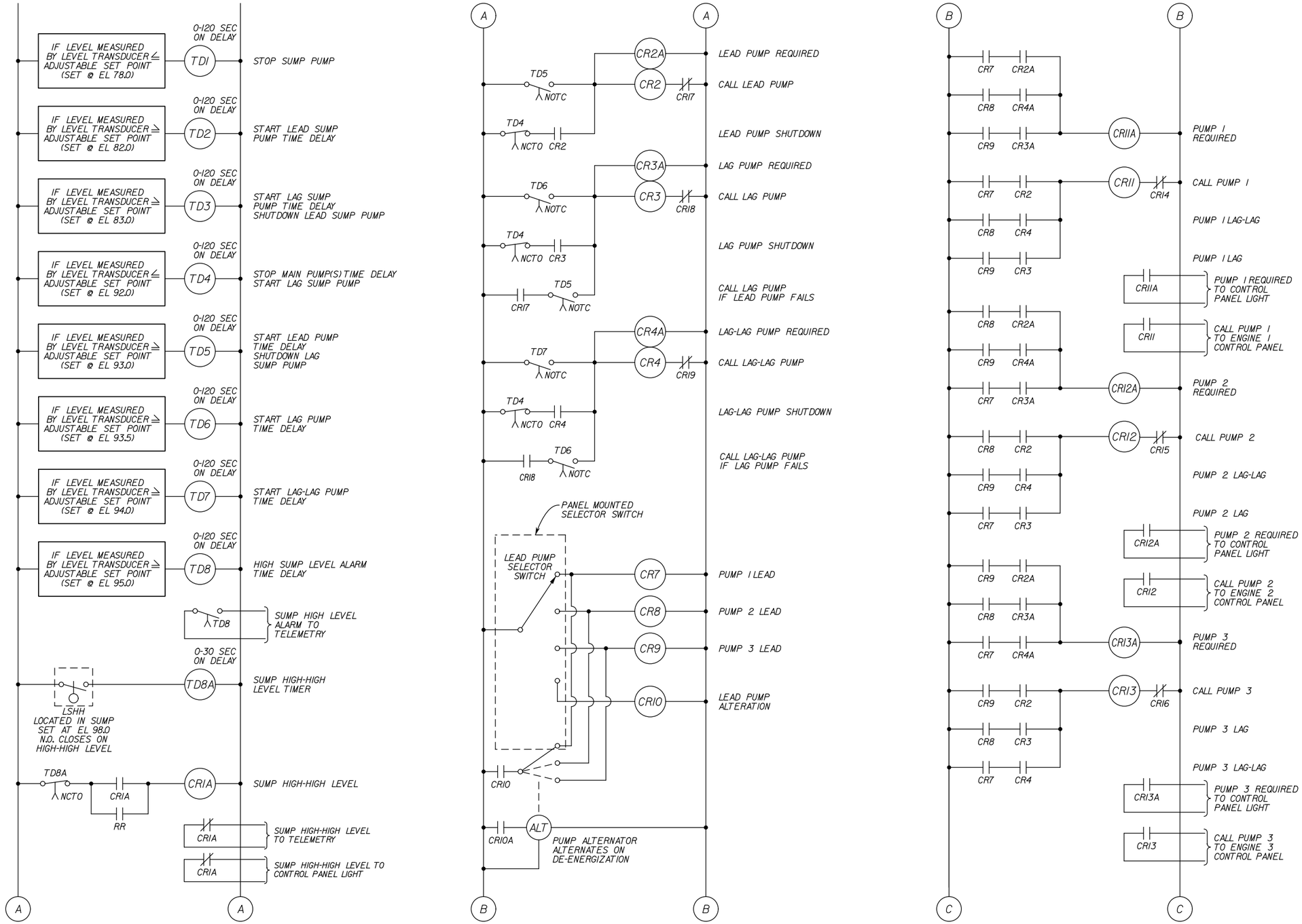

COUNTY OF ORANGE CALIFORNIA

MARK	DESCRIPTION	DATE	APPR.

PREPARED UNDER THE RESPONSIBLE CHARGE OF:

REGISTERED PROFESSIONAL ENGINEER JOHN A. LOAGUE No. 50092 Exp. 6/30/09 CIVIL STATE OF CALIFORNIA

DATE

DESIGNED BY: J. LEE
DRAWN BY: CADD
CHECKED BY: JOHN LOAGUE
DRAWING CODE: F06-101-7
FILE NAME: -
PLOT DATE: $DATE$
SCALE: AS SHOWN

OC PUBLIC WORKS

PREPARED BY: AKM CONSULTING ENGINEERS

HASTER RETARDING BASIN (C05B02) PUMP STATION

MASTER CONTROL/TELEMETRY PANEL MICROCONTROLLER PROGRAMMING LOGIC DIAGRAM I

Sheet Reference Number

E-7