RANCHO CALIFORNIA WATER DISTRICT

VAIL LAKE PUMP STATION

(PROJECT NO. D1317)

CONFORMED SET

NOVEMBER 2009

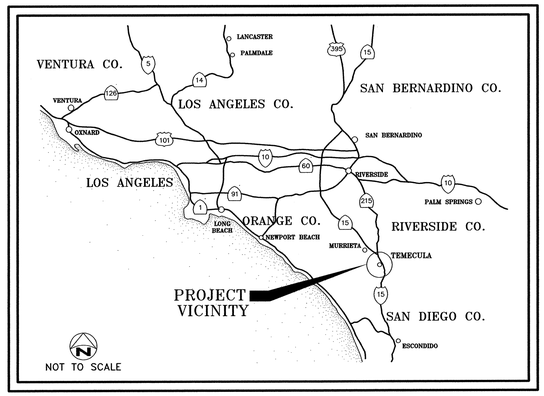

VICINITY MAP

SHEET INDEX

SHEET NO.	DESCRIPTION
G-1	VICINITY MAP, LOCATION MAP, SHEET INDEX
G-2	ABBREVIATIONS, LEGEND, GENERAL NOTES
C-1	SITE PLAN
C-2	GRADING AND DRAINAGE PLAN
C-3	CIVIL SECTION AND DETAILS
C-4	CIVIL DETAILS
M-1	PUMP STATION PLAN
M-2	PUMP STATION SECTIONS AND DETAILS
M-3	METER PAD PLAN AND SECTIONS
M-4	ELECTRICAL BUILDING MECHANICAL PLAN
M-5	MISCELLANEOUS DETAILS
M-6	MISCELLANEOUS DETAILS SHEET 2
S-1	STRUCTURAL STANDARD NOTES
S-2	STRUCTURAL STANDARD DETAILS
S-3	STRUCTURAL REINFORCED CMU NOTES AND STANDARD DETAILS
S-4	ELECTRICAL BUILDING FOUNDATION PLAN
S-5	ELECTRICAL BUILDING ROOF PLAN AND ROOF DETAILS
S-6	ELECTRICAL BUILDING SECTIONS
S-7	PUMP STATION PLAN AND SECTIONS
S-8	FLOW METER SLAB PLANS AND SECTION
E-1	ELECTRICAL SYMBOLS AND ABBREVIATIONS
E-2	SINGLE LINE DIAGRAM
E-2A	4160 VOLT SINGLE LINE DIAGRAM (FOR REFERENCE ONLY)
E-3	SWITCHBOARD AND EQUIPMENT ELEVATION
E-4	ELECTRICAL SITE PLAN
E-5	ELECTRICAL BUILDING AND PUMP STATION POWER AND SIGNAL PLAN
E-6	ELECTRICAL BUILDING AND PUMP STATION SIGNAL AND LIGHTING PLANS
E-7	ELEMENTARY DIAGRAMS
E-8	SCHEDULES
E-9	DETAILS
I-1	PROCESS AND INSTRUMENTATION SYMBOLS
I-2	PROCESS AND INSTRUMENTATION DIAGRAM-BOOSTER PUMPS
I-3	INSTRUMENTATION DETAILS
A-1	FLOOR PLAN, ROOF AND ELEVATIONS
A-2	SCHEDULES AND DETAILS

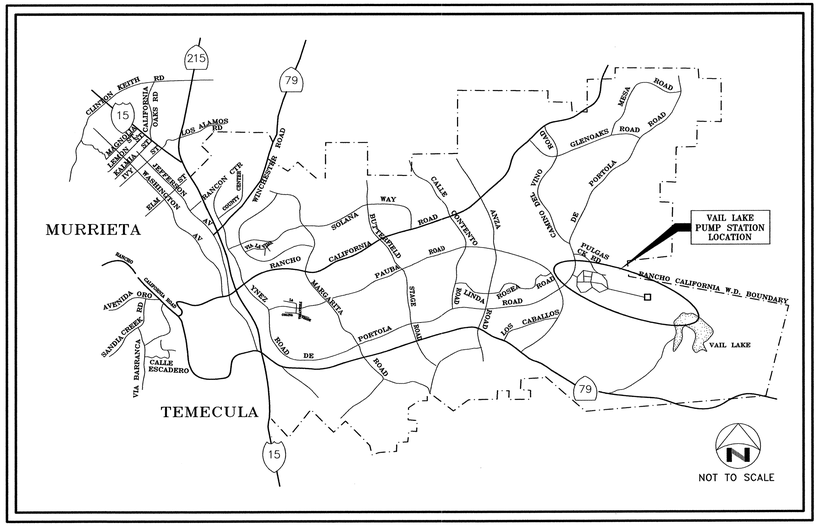

LOCATION MAP

BENCHMARK

THE BENCHMARK FOR THIS SURVEY IS THE COUNTY OF RIVERSIDE BENCHMARK "T-8-81". A 2 1/2" BRASS DISK STAMPED "T-8-81" IN A CONCRETE MONUMENT. LOCATED 53' FROM THE CENTERLINE OF DE PORTOLA ROAD, ONE MILE EAST ON DE PORTOLA ROAD FROM THE INTERSECTION WITH ANZA ROAD. ELEVATION = 1213.679 NGVD 29

BASIS OF BEARINGS

THE BASIS OF BEARINGS FOR THIS SURVEY IS THE NAD83, ZONE 6, GRID BEARING BETWEEN STATION "0210" AND STATION "0207", AS SAID STATIONS ARE SHOWN ON RECORD OF SURVEY 98/75-90, FILED APRIL 5, 1995 IN BOOK 98 OF RECORD OF SURVEYS AT PAGES 75 THRU 90 THE COUNTY RECORDER'S OFFICE OF RIVERSIDE COUNTY,
I.E. N41°49'07"E.
THE COMBINED SCALE FACTOR AT STATION "0207" IS 0.9999051

GRID DISTANCE = GROUND DISTANCE MULTIPLIED BY THE COMBINED SCALE FACTOR.

0207 = FOUND A 2.5" BRASS DISK STAMPED "RIV. CO. SUR. B.M. T-8-81" IN 6" CONCRETE BASE.

N: 2,125,239.571 E: 6,322,344.088 EPOCH 1991.35

0210 = FOUND A 4" BRASS DISK STAMPED "NATIONAL GEODETIC SURVEY, K 1312 1978" IN A 5" PVC COLLAR WITH TREADED CAP.

N: 2,105,799.196 E: 6,304,951.092 EPOCH 1991.35

0210 TO 0207 = N 41°49'07" E, 26,085.33' GRID RECORD, 26,085.37' GRID MEASURED.

UTILITY CONTACTS

SCE PLANNING DEPARTMENT (951) 249-8301

REGISTERED PROFESSIONAL ENGINEER
MATT A. TEBBETTS
No. C 24087
Exp 12-31-09
CIVIL
STATE OF CALIFORNIA
11-23-09

As-Built Drawing No.

DIGALERT
DIAL TOLL FREE
811
AT LEAST TWO DAYS BEFORE YOU DIG
UNDERGROUND SERVICE ALERT(USA) OF SOUTHERN CALIFORNIA

REVISIONS			
NUMBER	DATE	INITIALS	DESCRIPTION
1	11/17/09	NBM	CONFORMED SET

SCALE: NONE
DESIGNED BY: K. TIRADO
DRAWN BY: R. HERNANDEZ
CHECKED BY: B. THOMAS
FILE NAME: 0687100-G01.dwg

Kennedy/Jenks Consultants
SAN DIEGO, CALIFORNIA
10920 VIA FRONTERA, SUITE 110
K/J 0687100.00
APPROVED BY MATT A. TEBBETTS, P.E.
REGISTERED ENGINEER NO. 24087 DATE 11-23-09

Rancho Water
Rancho California Water District
42135 Winchester Road
Temecula, CA 92590
Phone: (951) 296-6900 Fax: (951) 296-6863

RANCHO CALIFORNIA WATER DISTRICT
APPROVED FOR CONSTRUCTION

Andrew Webster	4/29/09		
DIRECTOR OF ENGINEERING	DATE		
Corey Wallace 4/29/09	Ken Cope 4/29/09	CE 4/29/09	TW 4/29/09
ENGINEERING/DATE	CONTRACTS/DATE	OPERATIONS/DATE	MAINTENANCE/DATE

VAIL LAKE PUMP STATION
(PROJECT NO. D1317)

VICINITY MAP, LOCATION MAP, SHEET INDEX

SHEET G-1 OF 35 SHEETS

LAST EDIT DATE: Nov 19, 2009 - 10:22am

K/J CAD FILE: \\rn2\Projects\IRV\2006_Other\0687100_RCWD_Vail_Lake\Eng_and_Design\CAD\Pumps\95percent_DESIGN\0687100-G01.dwg

ABBREVIATIONS

AC	ASPHALT CONCRETE
AV/AR ASSY	AIR VAC/AIR RELEASE ASSEMBLY
AWWA	AMERICAN WATER WORKS ASSOCIATION
BC	BEGINNING OF CURVE
BVCE	BEGIN VERTICAL CURVE ELEVATION
BVCS	BEGIN VERTICAL CURVE STATION
CB	CATCH BASIN
℄	CENTERLINE
C&G	CONCRETE CURB AND GUTTER
CL	CLASS
CML	CEMENT MORTAR LINED
CML&C	CEMENT MORTAR LINED AND COATED
CMU	CONCRETE MASONRY UNIT
CPLG	COUPLING
CONC	CONCRETE
CORP	CORPORATION
DIA	DIAMETER
DWG	DRAWING
EC	END OF CURVE
EF	EACH FACE
ELEV	ELEVATION
ELL	ELBOW
EVCE	END OF VERTICAL CURVE ELEVATION
EVCS	END OF VERTICAL CURVE STATION
EW	EACH WAY
FB	FLAT BAR
FCA	FLANGE COUPLING ADAPTER
F.L.	FLOW LINE
FF	FINISH FLOOR
FG	FINISH GRADE
FLG	FLANGE
F.S.	FINISHED SURFACE
FT	FOOT
GA	GAUGE
GALV	GALVANIZED
G.B.	GRADE BREAK
GE	GROOVED END
HORIZ.	HORIZONTAL
HWL	HIGH WATER LEVEL
IE	INVERT ELEVATION
INV	INVERT
L	LENGTH
MAX	MAXIMUM
MIN.	MINIMUM
(N)	NEW
NEOP	NEOPRENE
NO	NUMBER
NPW	NON POTABLE WATER
O.C.	ON CENTER
O.D.	OUTSIDE DIAMETER
OSHA	OCCUPATIONAL SAFETY AND HEALTH ADMINISTRATION
PVMT	PAVEMENT
PE	PLAIN END
PL	PLATE
PRO	PROFILE
PSI	POUNDS PER SQUARE INCH
PT	POINT
PVI	POINT OF VERTICAL INTERSECTION
R	RADIUS
RES.	RESERVOIR
RSGV	RESILIENT SEATED GATE VALVE
RT	RIGHT
S	SLOPE
SCE	SOUTHERN CALIFORNIA EDISON
SD	STORM DRAIN
SHT	SHEET
SP	STEEL PIPE
SS	STAINLESS STEEL
STD	STANDARD
STL	STEEL
T	TANGENT
TYP	TYPICAL
VC	VERTICAL CURVE
VERT	VERTICAL
VOL	VOLUME
W	WITH
W/O	WITHOUT
WSP	WELDED STEEL PIPE
WT	WEIGHT

LEGEND

- PROPOSED CATCH BASIN
- PROPOSED BROW DITCH
- EXISTING FENCE
- PROPOSED FENCE
- 1489.5 — SPOT ELEVATION
- 1485 — EXISTING CONTOUR
- 1500 — PROPOSED CONTOUR (MAJOR)
- PROPOSED CONTOUR (MINOR)
- EXISTING HEADWALL
- PROPOSED HEADWALL
- RESILENT SEATED GATE VALVE
- STEEL
- CONCRETE
- PROPOSED ASPHALT CONCRETE
- PROPOSED PIPELINE (ABOVE GRADE)
- PROPOSED PIPELINE (BELOW GRADE)
- WATER SURFACE ELEVATION
- PROPOSED RIP-RAP
- CONCRETE ENERGY DISSIPATOR
- BLOW OFF ASSEMBLY

SECTION OR DETAIL REFERENCE

PUMP STATION

SECTION (LETTER) A
DETAIL (NUMERAL) M-4
SHEET DRAWN ON

PIPELINE TRANSMISSION MAIN

SECTION (LETTER) 4
DETAIL (NUMERAL) 23
SHEET DRAWN ON

PIPE AND VALVE SCHEDULE

ID	DESCRIPTION	SIZE	SERVICE	FLOW	MATERIAL
NPW	NON-POTABLE WATER	<3"	B,E	P	CU
NPW	NON-POTABLE WATER	≥4"	B,E	P	WS

MATERIALS

BS	BLACK AND CARBON STEEL
CISP	CAST IRON SOIL PIPE
CML&C	CEMENT MORTAR LINED & COATED STEEL PIPE
CU	COPPER
DI	DUCTILE IRON
FE	FIBERGLASS/EPOXY
GS	GALVANIZED STEEL
PE	POLYETHYLENE
PP	POLYPROPYLENE
PVC	POLYVINYL CHLORIDE
PVDF	POLYVINYLIDENE FLUORIDE
SCI	SILICON CAST IRON
SS	STAINLESS STEEL
VC	VITRIFIED CLAY
WS	WELDED STEEL

SERVICE

B	BURIED IN CONTACT WITH SOIL
C	CONCRETE ENCASED IN CONTACT WITH CONCRETE
E	EXPOSED IN CONTACT WITH THE ATMOSPHERE
S	SUBMERGED CONTINUOUSLY OR INTERMITTENTLY IN CONTACT WITH WATER

FLOW

G	GRAVITY PIPES FLOWING PARTIALLY FULL DUE TO GRAVITY FORCES
P	PRESSURE PIPES WHICH ARE CONTINUOUSLY OR INTERMITTENTLY FLOWING FULL DUE TO PUMPING OR GRAVITY FORCES

GENERAL PIPING NOTES

1. INFORMATION PROVIDED ON THIS SHEET ARE MINIMUM REQUIREMENTS. REFER TO THE SPECIFICATIONS FOR ADDITIONAL REQUIREMENTS.
2. LAY BURIED PIPE TO UNIFORM GRADE BETWEEN INDICATED ELEVATION POINTS. MINIMUM COVER SHALL BE 42" UNLESS OTHERWISE SHOWN.
3. SIZE OF FITTINGS SHOWN ON DRAWINGS SHALL CORRESPOND TO ADJACENT STRAIGHT RUN OF PIPE, UNLESS OTHERWISE INDICATED. TYPE OF JOINT AND FITTING MATERIAL SHALL BE THE SAME AS SHOWN FOR ADJACENT STRAIGHT RUN OF PIPE.
4. NUMBER OF PIPE SUPPORTS SHOWN IS ONLY APPROXIMATE. FINAL SUPPORT REQUIREMENTS SHALL BE DETERMINED IN THE FIELD AND APPROVED BY THE ENGINEER PRIOR TO INSTALLATION. MAXIMUM SPACING SHALL BE SPECIFIED.
5. APPROPRIATE STANDARD WALL PIPE DETAIL SHALL BE USED WHEREVER PIPING PASSES FROM A STRUCTURE TO BACKFILL. PER DETAIL 2 ON SHEET S-2
6. ALL FLEXIBLE CONNECTORS OR FLANGED COUPLING ADAPTERS SHALL BE PROVIDED WITH THRUST TIES, BLOCKS, OR ANCHORS, UNLESS OTHERWISE NOTED. THRUST PROTECTION SHALL BE ADEQUATE FOR TEST PRESSURES SPECIFIED.
7. SYMBOLS, LEGENDS, AND PIPE IDENTIFICATIONS SHOWN SHALL BE FOLLOWED THROUGHOUT THE DRAWINGS. ALL OF THE ITEMS SHOWN ARE NOT NECESSARILY USED IN THE PROJECT.
8. ALL PIPING WITH UNRESTRAINED JOINTS, SHALL BE PROVIDED WITH THRUST PROTECTION AT ALL DIRECTION CHANGES, UNLESS OTHERWISE NOTED. SEE THRUST DETAILS AND NOTES ON DRAWINGS.
9. NUMBER AND LOCATION OF UNIONS SHOWN ON DRAWINGS ARE ONLY APPROXIMATE. PROVIDE ALL UNIONS NECESSARY TO FACILITATE CONVENIENT REMOVAL OF VALVES AND MECHANICAL EQUIPMENT.
10. THE CONTRACTOR IS RESPONSIBLE FOR COORDINATING AND PERFORMING THE CONNECTION OF THE PIPING AND ASSOCIATED APPURTENANCES INSTALLED UNDER THIS CONTRACT TO THE EXISTING PIPING AND FACILITIES, AND TO THE WORK OF OTHER CONTRACTORS.
11. PRIOR TO SUBMITTING PIPING DRAWINGS FOR ANY NEW PIPE THAT IS TO CONNECT TO AN EXISTING PIPE OR STRUCTURE, THE CONTRACTOR SHALL EXPOSE THE EXISTING PIPE OR STRUCTURE TO VERIFY ITS EXACT LOCATION, SIZE, MATERIALS, AND INVERT ELEVATIONS.
12. ALL EXPOSED PIPING IS TO BE PAINTED AND LABELED UNLESS NOTED OTHERWISE PER RCWD TECHNICAL PROVISION DIVISION 8. LABELING SHALL INCLUDE FLOW DIRECTION ARROW AND PIPE USE.
13. ALL PIPING UNDER STRUCTURES TO BE CONCRETE ENCASED UNLESS NOTED OTHERWISE.

GENERAL NOTE

1. **THIS IS A STANDARD LEGEND SHEET. NOT ALL OF THE INFORMATION SHOWN MAY BE USED IN THIS PROJECT.**

PIPE SYMBOLS

DESCRIPTION — SINGLE LINE — DOUBLE LINE

- EXISTING PIPE
- NEW PIPE
- PIPE TO BE REMOVED
- FLANGED, WELD NECK
- FLANGED, SLIP ON
- SCREWED OR SOCKET WELD
- BELL & SPIGOT
- MECHANICAL JOINT
- ELBOW – STRAIGHT
- ELBOW – REDUCING
- ELBOW – DOWN
- ELBOW – UP
- CROSS
- WELD CAP
- BULKHEAD
- REDUCER
- TEE
- TEE – DOWN
- TEE – UP
- UNION
- FLEXIBLE RUBBER CONNECTOR
- FLEXIBLE HOSE CONNECTOR
- FLANGED COUPLING ADAPTER
- FLEXIBLE COUPLING
- DISASSEMBLING JOINT (DJ)
- FLOOR DRAIN
- CLEAN OUT

PIPE SUPPORT DESIGNATION

TXXS — PIPE SUPPORT DESIGNATION (TYPE XX SUPPORT) SEE PIPE SUPPORT DETAILS ON SHEET M-5 FOR SPECIFIC REQUIREMENTS

VALVE DESIGNATION

ACTUATOR SYMBOL

FV 101 — VALVE EQUIPMENT NUMBER, CONTROL VALVES ONLY.

VALVE SYMBOLS

DESCRIPTION — SINGLE LINE — DOUBLE LINE

- GATE VALVE
- GLOBE VALVE
- PLUG VALVE
- SWING CHECK VALVE
- BUTTERFLY (FLANGED)
- BUTTERFLY (WAFER)
- BALL VALVE
- DIAPHRAGM VALVE
- CAPILLARY CONTROL VALVE
- CONTROL VALVE (ELEVATION)
- CONTROL VALVE (PLAN)
- PRESSURE RELIEF VALVE (ELEVATION)
- PRESSURE RELIEF VALVE (PLAN)
- HOSE BIBB (HB)

ACTUATOR SYMBOLS

- MOTOR (M)
- SOLENOID (S)
- PNEUMATIC

FLOWMETER SYMBOLS

DESCRIPTION — SINGLE LINE — DOUBLE LINE

- MAGMETER (M)
- TURBINE METER
- VENTURI METER

DIGALERT — DIAL TOLL FREE 811 AT LEAST TWO DAYS BEFORE YOU DIG — UNDERGROUND SERVICE ALERT(USA) OF SOUTHERN CALIFORNIA

REGISTERED PROFESSIONAL ENGINEER MATTHEW A. TEBBETTS No. C 24087 Exp 12.31.09 CIVIL STATE OF CALIFORNIA 11.23.09

As-Built Drawing No.

REVISIONS			
NUMBER	DATE	INITIALS	DESCRIPTION
1	11/17/09	NBM	CONFORMED SET

SCALE: NTS
DESIGNED BY: R. LYONS
DRAWN BY: HERNANDEZ
CHECKED BY: B. THOMAS
FILE NAME: 0687100-G02.dwg

Kennedy/Jenks Consultants
10920 VIA FRONTERA, SUITE 110
SAN DIEGO, CALIFORNIA 92127
K/J 0687100.00

APPROVED BY MATT A. TEBBETTS, P.E.
REGISTERED ENGINEER NO. 24087 DATE 11-23-09

Rancho Water
Rancho California Water District
42135 Winchester Road
Temecula, CA 92590
Phone: (951) 296-6900 Fax: (951) 296-6863

RANCHO CALIFORNIA WATER DISTRICT
APPROVED
Corey Wallace — ENGINEERING MANAGER — 4/29/09 DATE
APPROVALS

Ken Cope 4/29/09	CE 4/29/09	TW 4/29/09
CONTRACTS/DATE	OPERATIONS/DATE	MAINTENANCE/DATE

VAIL LAKE PUMP STATION (PROJECT NO. D1317)

ABBREVIATIONS, LEGEND, GENERAL NOTES

SHEET G-2 OF 35 SHEETS

K/J CAD FILE:\ \\Vrv2\Projects\IRV\2006_Other\0687100_RCWD_Vail_Lake\Eng_and_Design\CAD\Pumps\95percent_DESIGN\0687100-G02.dwg LAST EDIT DATE: Nov 19, 2009 – 10:33am

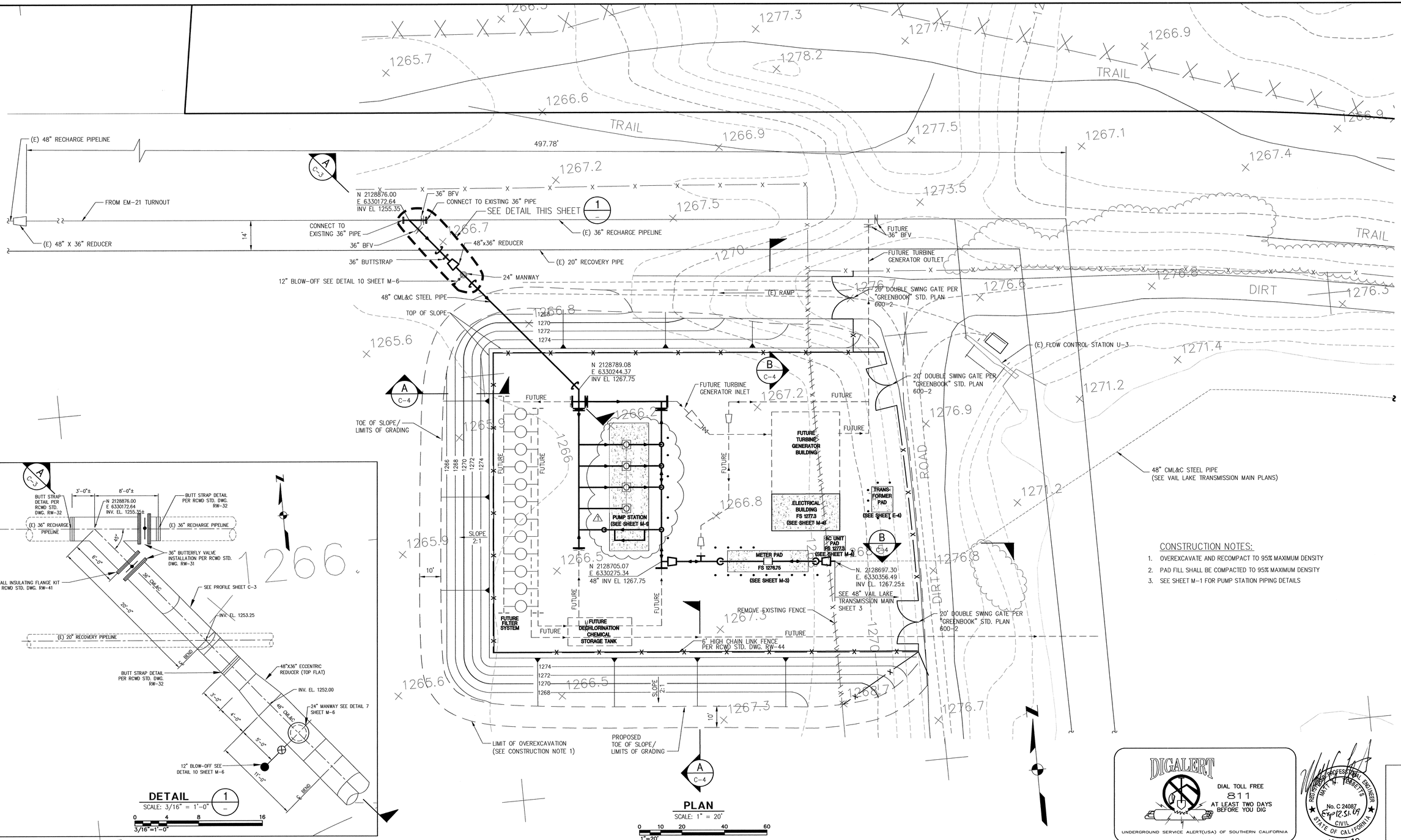

CONSTRUCTION NOTES:

1. OVEREXCAVATE AND RECOMPACT TO 95% MAXIMUM DENSITY
2. PAD FILL SHALL BE COMPACTED TO 95% MAXIMUM DENSITY
3. SEE SHEET M-1 FOR PUMP STATION PIPING DETAILS

DIGALERT
DIAL TOLL FREE 811 AT LEAST TWO DAYS BEFORE YOU DIG
UNDERGROUND SERVICE ALERT(USA) OF SOUTHERN CALIFORNIA

REGISTERED PROFESSIONAL ENGINEER MATT A. TEBBETTS No. C 24087 Exp 12.31.09 CIVIL STATE OF CALIFORNIA
11.23.09

As-Built Drawing No.

REVISIONS			
NUMBER	DATE	INITIALS	DESCRIPTION
1	10/30/09	NBM	ADDENDUM No. 3
2	11/17/09	NBM	CONFORMED SET

SCALE: 1"=20'
DESIGNED BY: K. TIRADO/R. LYONS
DRAWN BY: HERNANDEZ/BXB
CHECKED BY: B. THOMAS
FILE NAME: 0687100-C01.dwg

Kennedy/Jenks Consultants
10920 VIA FRONTERA, SUITE 110
SAN DIEGO, CALIFORNIA 92127
K/J 0687100.00

APPROVED BY MATT A. TEBBETTS, P.E.
REGISTERED ENGINEER NO. 24087 DATE 11.23.09

Rancho Water
Rancho California Water District
42135 Winchester Road
Temecula, CA 92590
Phone: (951) 296-6900 Fax: (951) 296-6863

RANCHO CALIFORNIA WATER DISTRICT
APPROVED
Corey Wallace — ENGINEERING MANAGER — 4/29/09 DATE
APPROVALS

Ken Cope 4/29/09	CE 4/29/09	TW 4/29/09
CONTRACTS/DATE	OPERATIONS/DATE	MAINTENANCE/DATE

VAIL LAKE PUMP STATION (PROJECT NO. D1317)

SITE PLAN

SHEET C-1 OF 35 SHEETS

LAST EDIT DATE: Nov 23, 2009 - 12:17pm

K:\ CAD FILE: \\Wr2\Projects\RV\2006_Other\0687100_RCWD_Vail_Lake\Eng_and_Design\CAD\Pumps\95percent_DESIGN\0687100-C01.dwg

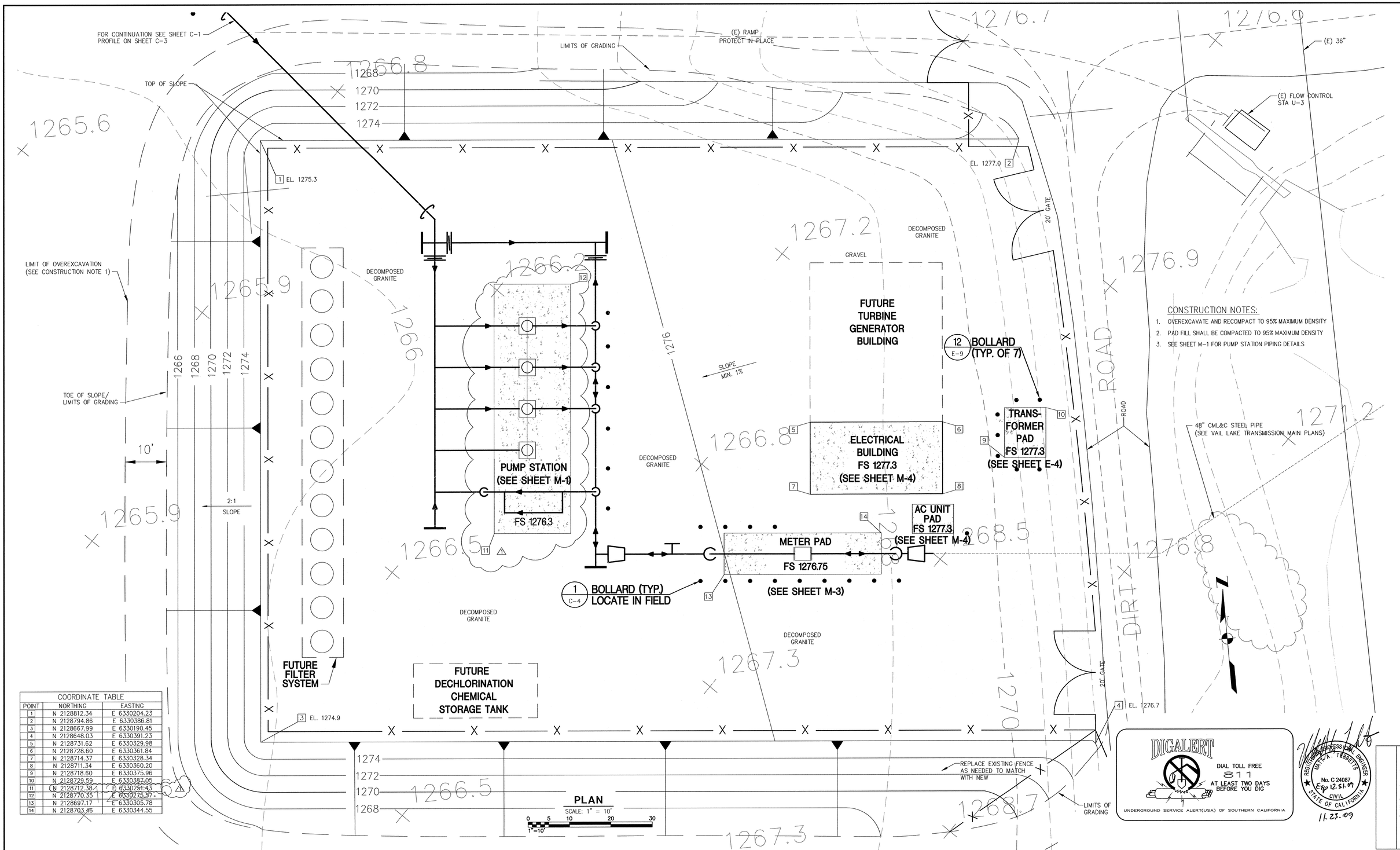

CONSTRUCTION NOTES:

1. OVEREXCAVATE AND RECOMPACT TO 95% MAXIMUM DENSITY
2. PAD FILL SHALL BE COMPACTED TO 95% MAXIMUM DENSITY
3. SEE SHEET M-1 FOR PUMP STATION PIPING DETAILS

COORDINATE TABLE		
POINT	NORTHING	EASTING
1	N 2128812.34	E 6330204.23
2	N 2128794.86	E 6330386.81
3	N 2128667.99	E 6330190.45
4	N 2128648.03	E 6330391.23
5	N 2128731.62	E 6330329.98
6	N 2128728.60	E 6330361.84
7	N 2128714.37	E 6330328.34
8	N 2128711.34	E 6330360.20
9	N 2128718.60	E 6330375.96
10	N 2128729.59	E 6330387.05
11	N 2128712.38	E 6330251.43
12	N 2128770.35	E 6330275.37
13	N 2128697.17	E 6330305.78
14	N 2128703.46	E 6330344.55

REVISIONS			
NUMBER	DATE	INITIALS	DESCRIPTION
1	10/30/09	NBM	ADDENDUM No. 3
2	11/17/09	NBM	CONFORMED SET

SCALE: 1"=10'
DESIGNED BY: K. TIRADO/R. LYONS
DRAWN BY: HERNANDEZ/BXB
CHECKED BY: B. THOMAS
FILE NAME: 0687100-C02.dwg

Kennedy/Jenks Consultants
10920 VIA FRONTERA, SUITE 110
SAN DIEGO, CALIFORNIA 92127
K/J 0687100.00

APPROVED BY MATT A. TEBBETTS, P.E.
REGISTERED ENGINEER NO. 24087 DATE 11.23.09

Rancho Water
Rancho California Water District
42135 Winchester Road
Temecula, CA 92590
Phone: (951) 296-6900 Fax: (951) 296-6863

RANCHO CALIFORNIA WATER DISTRICT
APPROVED
Corey Wallace — ENGINEERING MANAGER — 4/29/09 DATE
APPROVALS

Ken Cope 4/29/09	CE 4/29/09	TW 4/29/09
CONTRACTS/DATE	OPERATIONS/DATE	MAINTENANCE/DATE

VAIL LAKE PUMP STATION
(PROJECT NO. D1317)

GRADING AND DRAINAGE PLAN

SHEET
C-2
OF 35 SHEETS

As-Built Drawing No.

LAST EDIT DATE: Nov 20, 2009 - 6:49pm

K/J CAD FILE: \\Wv2\projects\RWV2006_Other\0687100_RCWD_Vail_Lake\Eng_and_Design\CAD\Pumps\95percent_DESIGN\0687100-C02.dwg

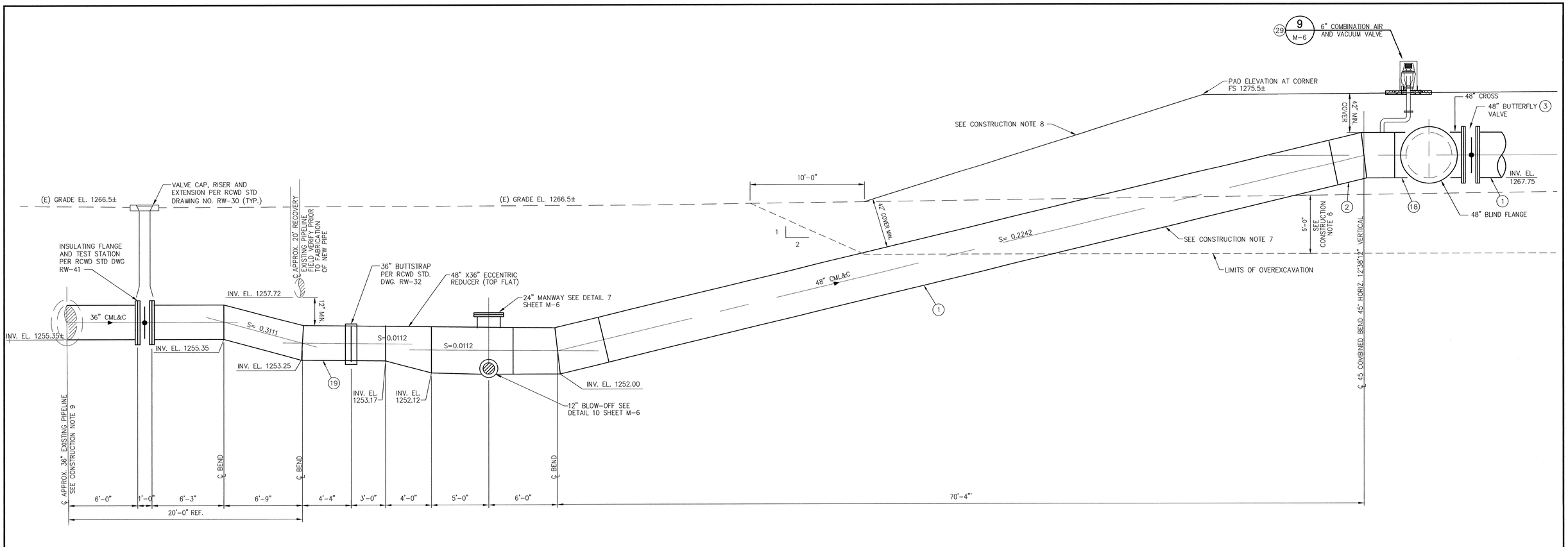

SECTION A C-1
SCALE 1/4"=1'-0"

0 2 4 8 12
1/4"=1'-0"

CONSTRUCTION NOTES:

1. REFERENCE SHEET M-1 FOR MATERIAL CALLOUTS.
2. LAP WELD ALL JOINTS PER RCWD STD DWG. RW-34.
3. MINIMUM DESIGN PRESSURE IS 150 PSI.
4. BELOW GROUND PIPE SHALL BE CEMENT MORTAR LINED AND COATED.
5. ABOVE GROUND PIPE SHALL BE CEMENT MORTAR LINED AND PAINTED PER RCWD SPEC. DIV. 8.
6. OVEREXCAVATE AND RECOMPACT TO 95% MAXIMUM DENSITY.
7. PIPE SHALL NOT BE INSTALLED UNTIL AFTER OVEREXCAVATION AND BACKFILL OF PAD AND PAD FILL EMBANKMENT ROUGH GRADING ARE COMPLETE.
8. PAD FILL SHALL BE COMPACTED TO 95% MAXIMUM DENSITY.
9. CONTRACTOR TO POTHOLE AND VERIFY ELEVATION OF EXISTING PIPELINES PRIOR TO FABRICATION OF PIPE.

DIGALERT
DIAL TOLL FREE
811
AT LEAST TWO DAYS BEFORE YOU DIG
UNDERGROUND SERVICE ALERT(USA) OF SOUTHERN CALIFORNIA

REGISTERED PROFESSIONAL ENGINEER MATT A. TEBBETTS No. C 24087 Exp 12-31-09 CIVIL STATE OF CALIFORNIA
11.25.09

As-Built Drawing No.

REVISIONS			
NUMBER	DATE	INITIALS	DESCRIPTION
1	11/17/09	NBM	CONFORMED SET

SCALE: 1"=10'
DESIGNED BY: K. TIRADO/R. LYONS
DRAWN BY: BXB
CHECKED BY: B. THOMAS
FILE NAME: 0687100-C03.dwg

Kennedy/Jenks Consultants
10920 VIA FRONTERA, SUITE 110
SAN DIEGO, CALIFORNIA 92127
K/J 0687100.00

APPROVED BY MATT A. TEBBETTS, P.E.
REGISTERED ENGINEER NO. 24087 DATE 11-25-09

Rancho Water
Rancho California Water District
42135 Winchester Road
Temecula, CA 92590
Phone: (951) 296-6900 Fax: (951) 296-6863

RANCHO CALIFORNIA WATER DISTRICT
APPROVED
Corey Wallace — ENGINEERING MANAGER — 4/29/09 DATE
APPROVALS

Ken Cope 4/29/09	CE 4/29/09	TW 4/29/09
CONTRACTS/DATE	OPERATIONS/DATE	MAINTENANCE/DATE

VAIL LAKE PUMP STATION (PROJECT NO. D1317)

CIVIL SECTION AND DETAILS

SHEET C-3 OF 35 SHEETS

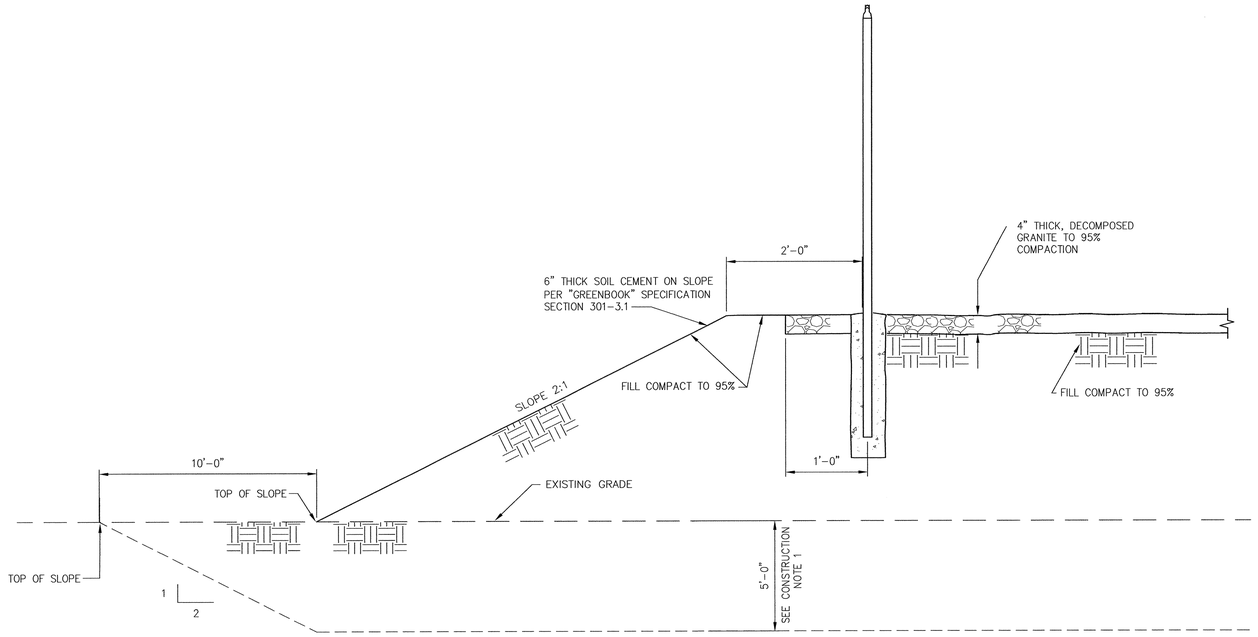

SECTION A / C-1
NOT TO SCALE

NOTES:

1. OVEREXCAVATE AND RECOMPACT TO 95% MAXIMUM DENSITY.

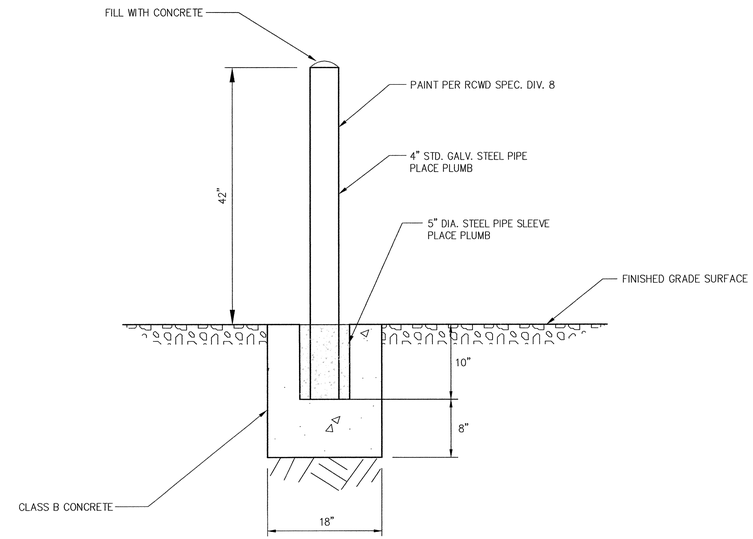

BOLLARD DETAIL 1 / C-2 / M-3
SCALE 1/2"=1'-0"

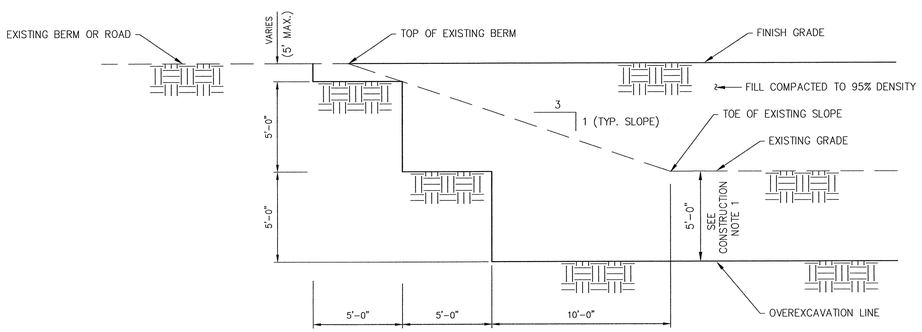

SECTION B / C-1
NOT TO SCALE

NOTES:

1. OVEREXCAVATE AND RECOMPACT TO 95% MAXIMUM DENSITY.

DIGALERT
DIAL TOLL FREE 811 AT LEAST TWO DAYS BEFORE YOU DIG
UNDERGROUND SERVICE ALERT(USA) OF SOUTHERN CALIFORNIA

REGISTERED PROFESSIONAL ENGINEER MATT A. TEBBETTS No. C 24087 Exp. 12-31-09 CIVIL STATE OF CALIFORNIA
11-23-09

As-Built Drawing No.

REVISIONS			
NUMBER	DATE	INITIALS	DESCRIPTION
1	11/17/09	NBM	CONFORMED SET

SCALE: 1"=10'
DESIGNED BY: K. TIRADO/R. LYONS
DRAWN BY: HERNANDEZ/BXB
CHECKED BY: B. THOMAS
FILE NAME: 0687100-C04.dwg

Kennedy/Jenks Consultants
10920 VIA FRONTERA, SUITE 110
SAN DIEGO, CALIFORNIA 92127
K/J 0687100.00

APPROVED BY MATT A. TEBBETTS, P.E.
REGISTERED ENGINEER NO. 24087 DATE - 11-23-09

Rancho Water
Rancho California Water District
42135 Winchester Road
Temecula, CA 92590
Phone: (951) 296-6900 Fax: (951) 296-6863

RANCHO CALIFORNIA WATER DISTRICT
APPROVED
Corey Wallace — ENGINEERING MANAGER — 4/29/09 DATE
APPROVALS

Ken. Cope 4/29/09	CE 4/29/09	TW 4/29/09
CONTRACTS/DATE	OPERATIONS/DATE	MAINTENANCE/DATE

VAIL LAKE PUMP STATION (PROJECT NO. D1317)

CIVIL DETAILS

SHEET C-4 OF 35 SHEETS

CONSTRUCTION NOTES

1. MINIMUM DESIGN PRESSURE IS 150 PSI.
2. LAP WELD ALL JOINTS PER RCWD STD. DWG. RW-34, UNLESS NOTED OTHERWISE INDICATED ON PLANS.
3. TYPE 316SS PIPE SHALL NOT BE LINED OR PAINTED
4. ABOVE GROUND PIPE SHALL BE CEMENT MORTAR LINED AND PAINTED PER RCWD SPEC DIVISION 8.
5. BELOW GROUND PIPE SHALL BE CEMENT MORTAR LINED AND COATED.

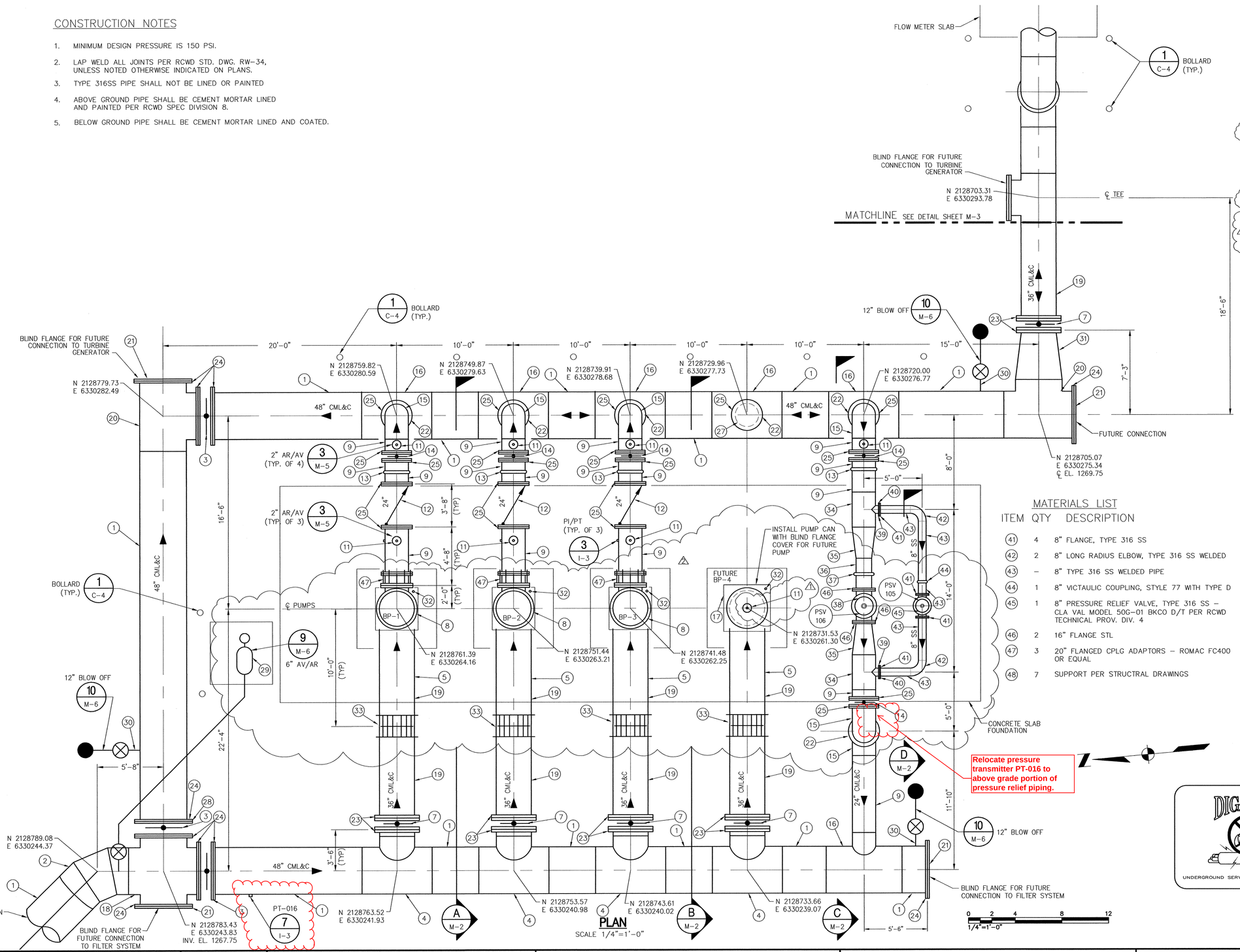

PLAN
SCALE 1/4"=1'-0"

MATERIALS LIST

ITEM	QTY	DESCRIPTION
1	–	48" WELDED STL PIPE
2	1	48" COMBINED BEND ELBOW 45° HORIZ., 12.3° VERTICAL, WELDED STL.
3	3	48" ZERO LEAKAGE, METAL SEATED BUTTERFLY VALVE PER TECHNICAL SPECIFICATION 15051
4	4	48" X 36" REDUCING TEE, WELDED STL
5	–	36" WELDED STL, SEE STRUCTUAL DWGS FOR CONCRETE ENCASED PORTIONS
6	–	NOT USED
7	5	36" ZERO LEAKAGE, METAL SEATED BUTTERFLY VALVE PER TECHNICAL SPECIFICATION 15051
8	3	VERTICAL TURBINE PUMP PER TECHNICAL SPECIFICATION 11215
9	–	24" WELDED STL PIPE
10	–	NOT USED
11	8	2" AV/AR ASS'Y PER DETAIL 3 ON SHEET M-5
12	3	24" SWING CHECK VALVE PER RCWD TECHNICAL PROV. DIV. 4
13	4	24" VICTAULIC COUPLING, STYLE 77 WITH TYPE D VIC RINGS
14	5	24" ZERO LEAKAGE, METAL SEATED BATTERFLY VALVE PER TECHNICAL SPECIFICATION 15051
15	6	24" SHORT RADIUS ELBOW, WELDED STL
16	6	48"X24" REDUCING TEE, WELDED STL
17	1	CAP WITH BLIND FLANGE
18	1	48" CROSS, WELDED STL
19	–	36" WELDED STL PIPE
20	2	48" TEE WELDED STL
21	4	48" BLIND FLANGE STL
22	6	24" INSULATING FLANGE KIT PER RCWD STD. DWG. RW-41 AND RCWD TECHNICAL PROV. DIV. 19
23	10	36" FLANGE STL
24	10	48" FLANGE STL
25	27	24" FLANGE STL
26	4	STEEL PUMP CAN, DESIGN PER SPECIFICATIONS MIN. 1/4" WALL THICKNESS, WSP 42"ø PER TECH SPEC 11215
27	1	24" BLIND FLANGE STL
28	1	48" INSULATING FLANGE KIT PER RCWD STD DWG RW-41 W/ TEST STATION PER RW-40, TECHNICAL PROV. DIV. 19
29	1	6" AV/AR PER DETAIL 9 ON SHEET M-6
30	3	12" BLOWOFF PER DETAIL 10 SHEET M-6
31	1	48" X 36" CONCENTRIC REDUCER, WELDED STL
32	4	DRILL AND TAP 2" NPT INTO PUMP BASE FOR WARRICK E-3 PROBE HOUSING (SEE SHEET E-5)
33	4	36" RESTRAINTED FLEX COUPLING STL
34	2	24" X 8" REDUCING TEE, WELDED STL
35	2	24" X 16" ECCENTRIC REDUCER, WELDED STL, TOP FLAT
36	–	16" WELDED STL PIPE
37	1	16" VICTAULIC COUPLING, STYLE 77 WITH TYPE D
38	1	16" PRESSURE RELIEF VALVE – CLA VAL MODEL 50G-01 BKCO D/T PER RCWD TECHNICAL PROV. DIV. 4
39	2	8" FLANGE STL
40	2	8" INSULATING FLANGE KIT PER RCWD TECH PROV DIV 19

MATERIALS LIST

ITEM	QTY	DESCRIPTION
41	4	8" FLANGE, TYPE 316 SS
42	2	8" LONG RADIUS ELBOW, TYPE 316 SS WELDED
43	–	8" TYPE 316 SS WELDED PIPE
44	1	8" VICTAULIC COUPLING, STYLE 77 WITH TYPE D
45	1	8" PRESSURE RELIEF VALVE, TYPE 316 SS – CLA VAL MODEL 50G-01 BKCO D/T PER RCWD TECHNICAL PROV. DIV. 4
46	2	16" FLANGE STL
47	3	20" FLANGED CPLG ADAPTORS – ROMAC FC400 OR EQUAL
48	7	SUPPORT PER STRUCTRAL DRAWINGS

DIGALERT
DIAL TOLL FREE 811 AT LEAST TWO DAYS BEFORE YOU DIG
UNDERGROUND SERVICE ALERT(USA) OF SOUTHERN CALIFORNIA

REGISTERED PROFESSIONAL ENGINEER MATT A. TEBBETTS No. C 24087 Exp 12-31-09 CIVIL STATE OF CALIFORNIA
11-23-09

As-Built Drawing No.

LAST EDIT DATE: Nov 20, 2009 - 6:25pm

K/J CAD FILE: \\rw2\projects\RV\2006_Other\0687100_RCWD_Vail_Lake\Eng_and_Design\CAD\Pumps\95percent_DESIGN\0687100-M01.dwg

REVISIONS

NUMBER	DATE	INITIALS	DESCRIPTION
1	10/22/09	NBM	2" AVAR ADDED
2	10/30/09	NBM	ADDENDUM No. 3
3	11/17/09	NBM	CONFORMED SET

SCALE: AS SHOWN
DESIGNED BY: K. TIRADO
DRAWN BY: BXB
CHECKED BY: K. TIRADO
FILE NAME: 0687100-M01.dwg

Kennedy/Jenks Consultants
10920 VIA FRONTERA, SUITE 110
SAN DIEGO, CALIFORNIA 92127
K/J 0687100.00

APPROVED BY MATT A. TEBBETTS, P.E.
REGISTERED ENGINEER NO. 24087 DATE 11-23-09

Rancho Water
Rancho California Water District
42135 Winchester Road
Temecula, CA 92590
Phone: (951) 296-6900 Fax: (951) 296-6863

RANCHO CALIFORNIA WATER DISTRICT
APPROVED
Corey Wallace — ENGINEERING MANAGER — 4/29/09 DATE
APPROVALS

Ken Cope 4/29/09	CE 4/29/09	TW 4/29/09
CONTRACTS/DATE	OPERATIONS/DATE	MAINTENANCE/DATE

VAIL LAKE PUMP STATION (PROJECT NO. D1317)

PUMP STATION PLAN

SHEET M-1 OF 35 SHEETS

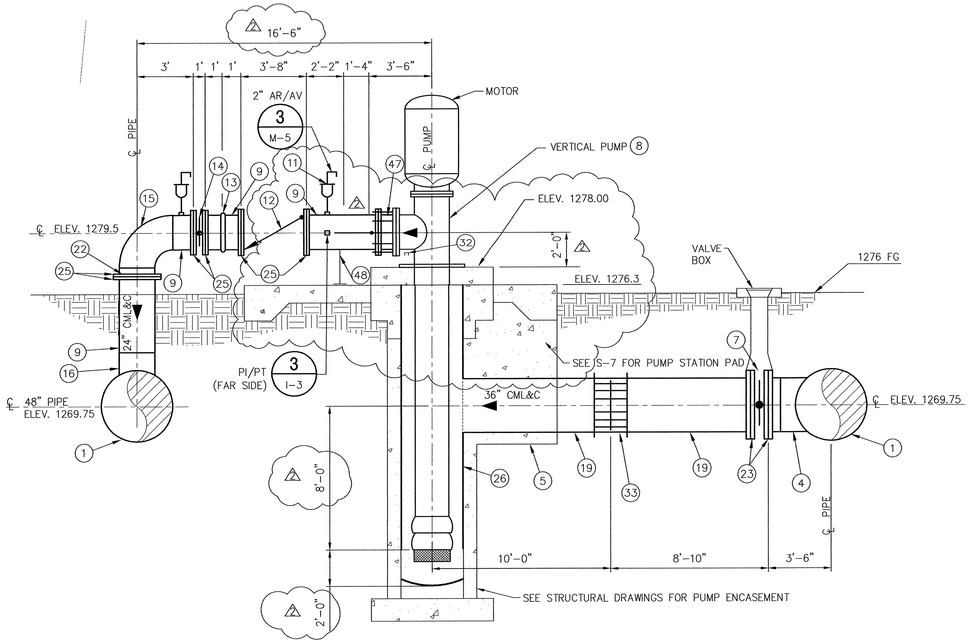

SECTION A / M-1
SCALE 1/4"=1'-0"

0 2 4 8 12
1/4"=1'-0"

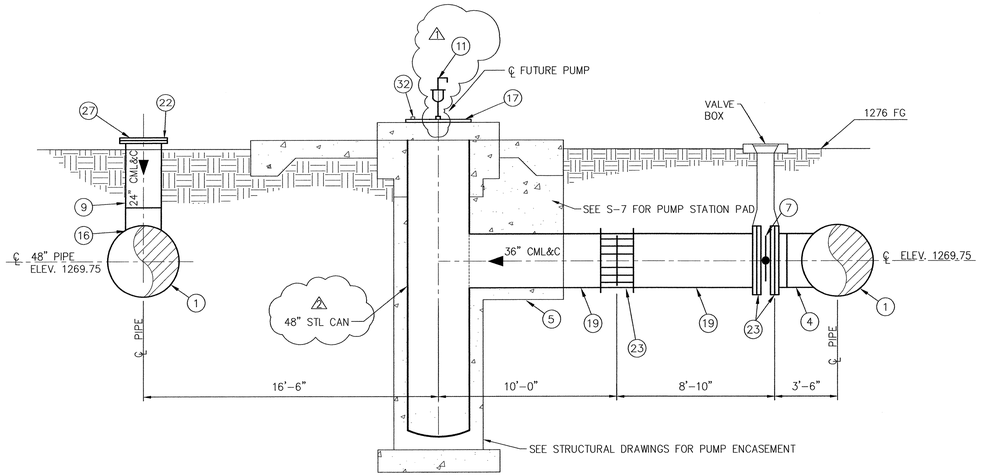

SECTION B / M-1
SCALE 1/4"=1'-0"

0 2 4 8 12
1/4"=1'-0"

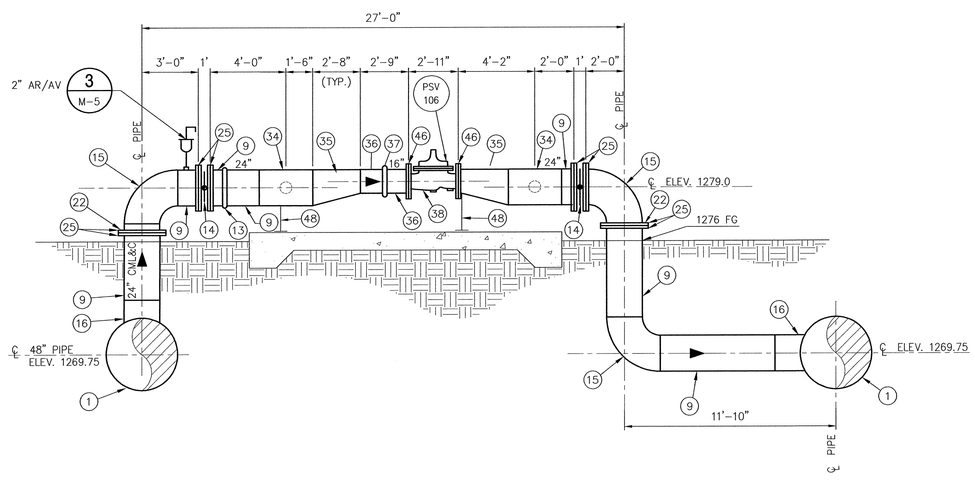

SECTION C / M-1
SCALE 1/4"=1'-0"

0 2 4 8 12
1/4"=1'-0"

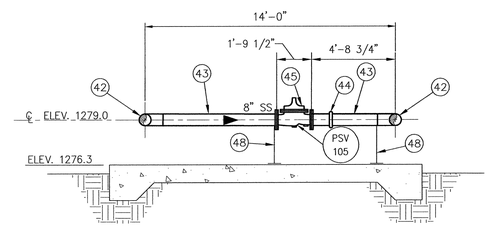

SECTION D / M-1
SCALE 1/4"=1'-0"

0 2 4 8 12
1/4"=1'-0"

MATERIAL LIST

ITEM	DESCRIPTION
1	48" WELDED STL PIPE
4	48"X36" REDUCING TEE, WELDED STL
5	36" WELDED STL, SEE STRUCTAL DWGS FOR CONCRETE ENCASED PORTIONS
7	36" ZERO LEAKAGE, METAL SEATED BATTERFLY VALUE, ADAMS, VANESSA, OR EQUAL, FLANGED, BURIED AWWA SERVICE W/2-INCH OPERATING NUT AND WITH RISER, PER RCWD STD DWG RW-30 AND TECHNICAL SPECIFICATION 15051
8	VERTICAL TURBINE PUMP WITH VORTEX SUPPRESSOR PER TECHNICAL SPECIFICATION 11215
9	24" WELDED STL PIPE
10	NOT USED
11	2" AV/AR ASS'Y PER DETAIL 3 ON SHEET M-5
12	24" SWING CHECK VALVE PER RCWD TECHNICAL PROV. DIV. 4
13	24" VICTAULIC COUPLING, STYLE 77 WITH TYPE D VIC RINGS
14	24" ZERO LEAKAGE, METAL SEATED BATTERFLY VALUE, PER TECHNICAL SPECIFICATION 15051
15	24" SHORT RADIUS ELBOW, STL, WELDED
16	48"X24" REDUCING TEE, STL, WELDED
17	CAP WITH BLIND FLANGE
19	36" WELDED STL PIPE
22	24" INSULATING FLANGE KIT PER RCWD STD. DWG. RW-41, RCWD TECHNICAL PROV. DIV. 19
23	36" FLANGE WELDED STL
25	24" FLANGE WELDED STL
26	STEEL PUMP CAN, DESIGN PER SPECIFICATIONS MIN. 1/4" WALL THICKNESS WSP 42"ø, PER TECHNICAL SPECIFICATION 11215
27	24" BLIND FLANGE STL
30	NOT USED
32	DRILL AND TAP 2" NPT INTO PUMP BASE FOR WARRICK E-3 PROBE HOUSING (SEE SHEET E-5)
33	36" RESTRAINED FLEX COUPLING
34	24" X 8" REDUCING TEE, WELDED STL
35	24" X 16" ECCENTRIC REDUCER, WELDED STL, TOP FLAT
36	16" WELDED STL PIPE
37	16" VICTAULIC COUPLING, STYLE 77 WITH TYPE D
38	16" PRESSURE RELIEF VALVE - CLA VAL MODEL 50G-01 BKCO D/T PER RCWD TECHNICAL PROV. DIV. 4
40	8" INSULATING FLANGE KIT PER RCWD TECHNICAL PROV. DIV. 19
41	8" FLANGE, TYPE 316 SS
42	8" LONG RADIUS ELBOW, TYPE 316 SS
43	8" TYPE 316 SS WELDED PIPE
44	8" VICTAULIC COUPLING, STYLE 77 WITH TYPE D
45	8" PRESSURE RELIEF VALVE, TYPE 316 SS - CLA VAL MODEL 50G-01 BKCO D/T PER RCWD TECHNICAL PROV. DIV. 4
46	16" FLANGE STL
47	24" FLANGED CPLG ADAPTORS - ROMAC FC400 OR EQUAL
48	SUPPORT PER STRUCTURAL DRAWINGS

DIGALERT
DIAL TOLL FREE
811
AT LEAST TWO DAYS BEFORE YOU DIG
UNDERGROUND SERVICE ALERT(USA) OF SOUTHERN CALIFORNIA

REGISTERED PROFESSIONAL ENGINEER MATT A. TEBBETTS No. C 24087 Exp 12.31.09 CIVIL STATE OF CALIFORNIA
11.23.09

As-Built Drawing No.

LAST EDIT DATE: Nov 20, 2009 - 6:42pm

K:\J CAD FILE\ \\Irv2\projects\IRV\2006_Other\0687100_RCWD_Vail_Lake\Eng_and_Design\CAD\Pumps\95percent_DESIGN\0687100-M02.dwg

REVISIONS			
NUMBER	DATE	INITIALS	DESCRIPTION
1	10/22/09	NBM	2" AVAR ADDED
2	10/30/09	NBM	ADDENDUM No. 3
3	11/17/09	NBM	CONFORMED SET

SCALE: AS SHOWN
DESIGNED BY: K. TIRADO/R. LYONS
DRAWN BY: BXB
CHECKED BY: B. THOMAS
FILE NAME: 0687100-M02.dwg

Kennedy/Jenks Consultants
10920 VIA FRONTERA, SUITE 110
SAN DIEGO, CALIFORNIA 92127
K/J 0687100.00

APPROVED BY MATT A. TEBBETTS, P.E.
REGISTERED ENGINEER NO. 24087 DATE 11.23.09

Rancho Water
Rancho California Water District
42135 Winchester Road
Temecula, CA 92590
Phone: (951) 296-6900 Fax: (951) 296-6863

RANCHO CALIFORNIA WATER DISTRICT
APPROVED
Corey Wallace — ENGINEERING MANAGER — 4/29/09 DATE
APPROVALS

Ken Cope 4/29/09	CE 4/29/09	TW 4/29/09
CONTRACTS/DATE	OPERATIONS/DATE	MAINTENANCE/DATE

VAIL LAKE PUMP STATION
(PROJECT NO. D1317)

PUMP STATION SECTIONS AND DETAILS

SHEET
M-2
OF 35 SHEETS

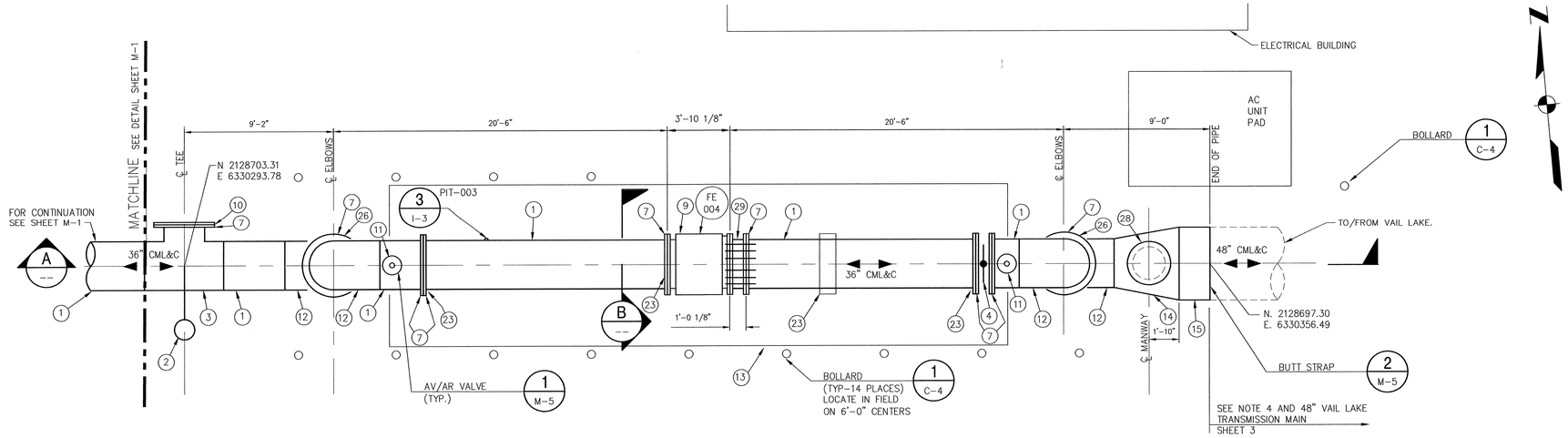

PLAN

SCALE 1/4"=1'-0"

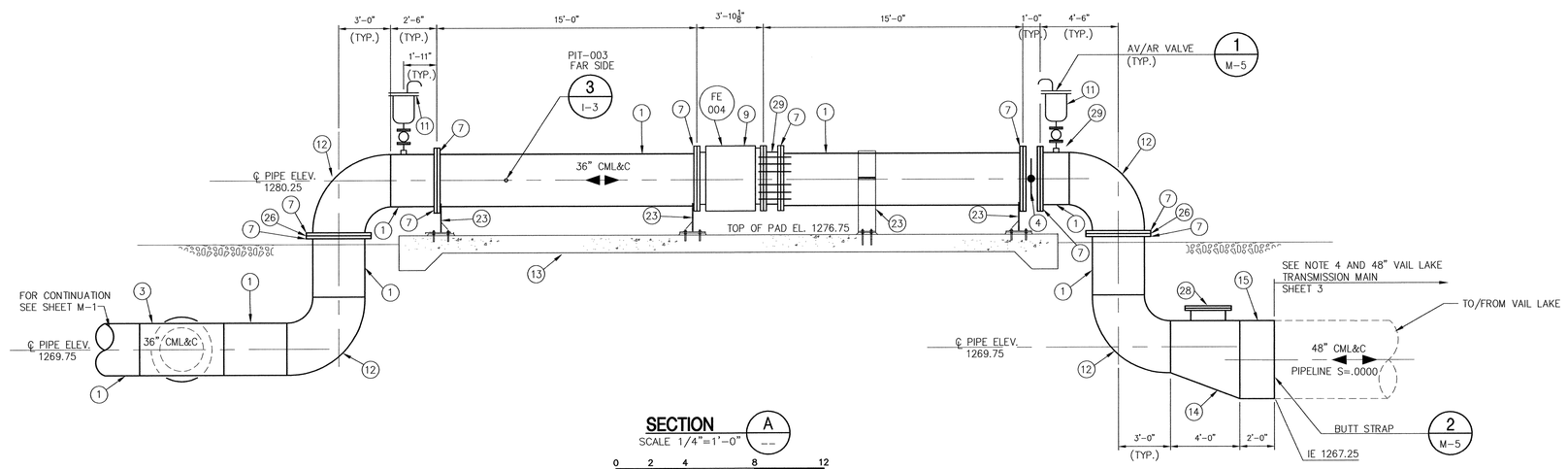

SECTION A

SCALE 1/4"=1'-0"

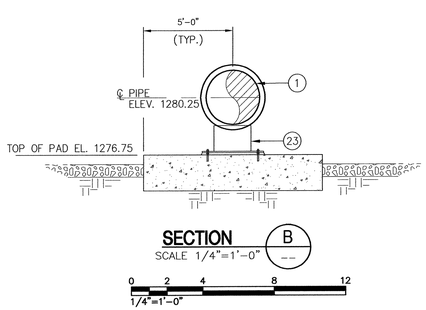

SECTION B

SCALE 1/4"=1'-0"

MATERIALS LIST

ITEM	QTY	DESCRIPTION
1	–	36" WELDED STL PIPE
2	1	C.P.T.S. PER RCWD STD. DETAIL RW-40, TECHNICAL PROV. DIV. 19
3	1	36" TEE, WELDED, STL.
4	1	36" ZERO LEAKAGE, METAL SEATED BUTTERFLY VALVE, ADAMS, VANESSA OR EQUAL, FLANGED, 150 LBS, WITH HANDWHEEL PER TECHNICAL SPECIFICATION 15051
5	–	NOT USED
6	–	NOT USED
7	9	36" FLANGE STL
8	–	NOT USED
9	1	36" ELECTROMAGNETIC FLOWMETER, McCROMETER ULTRA MAG PER RCWD TECHNICAL PROV. DIV. 18 (FE-004)
10	1	36" BLIND FLANGE STL
11	2	4" AV/AR ASS'Y PER DETAIL 1 ON SHEET M-5
12	4	36" SHORT RADIUS FORGED ELBOW, WELDED STL
13	1	10' WIDE X 38' LONG CONCRETE SLAB. CENTER SLAB BETWEEN ELBOWS – SEE STRUCTURAL SHEET S-8
14	1	48"x36" ECCENTRIC REDUCER TOP FLAT, WELDED STL
15	–	48" WELDED STL PIPE
16	–	NOT USED
17	–	NOT USED
18	–	NOT USED
19	–	NOT USED
20	–	NOT USED
21	–	NOT USED
22	–	NOT USED
23	4	SUPPORTS PER STRUCTURAL DWGS
24	–	NOT USED
25	–	NOT USED
26	2	INSULATION FLANGE KIT PER RCWD STD DWG RW-41, RCWD TECHNICAL PROV. DIV. 19
27	–	NOT USED
28	1	24" MANWAY PER DETAIL 7 ON SHEET M-6
29	1	36" DISMANTLING JOINT
30	–	NOT USED
31	–	NOT USED

NOTES

1. ALL ABOVE GRADE STEEL PIPING SHALL BE CEMENT MORTAR LINED AND PAINTED PER RCWD SPEC. DIV. 8.
2. ALL BURIED STEEL PIPING SHALL BE CEMENT MORTAR LINED AND COATED.
3. CONTRACTOR TO SUPPLY/FABRICATE SPOOL PIECE FOR TEMPORARY INSERTION IF METER IS REMOVED FOR REPAIR, ETC.
4. CONNECTION SHALL BE P.E. WELDED, NOT FLANGED AS SHOWN ON VAIL LAKE TRANSMISSION MAIN SHEET 3.
5. MINIMUM DESIGN PRESSURE IS 150 PSI.

DIGALERT
DIAL TOLL FREE 811 AT LEAST TWO DAYS BEFORE YOU DIG
UNDERGROUND SERVICE ALERT(USA) OF SOUTHERN CALIFORNIA

REGISTERED PROFESSIONAL ENGINEER MATT A. TEBBETTS No. C 24087 Exp. 12.31.09 CIVIL STATE OF CALIFORNIA
11.23.09

As-Built Drawing No.

REVISIONS			
NUMBER	DATE	INITIALS	DESCRIPTION
1	11/17/09	NBM	CONFORMED SET

SCALE: AS SHOWN
DESIGNED BY: K. TIRADO/R. LYONS
DRAWN BY: BXB
CHECKED BY: B. THOMAS
FILE NAME: 0687100-M03.dwg

Kennedy/Jenks Consultants
10920 VIA FRONTERA, SUITE 110
SAN DIEGO, CALIFORNIA 92127
K/J 0687100.00

APPROVED BY MATT A. TEBBETTS, P.E.
REGISTERED ENGINEER NO. 24087 DATE 11-23-09

Rancho Water
Rancho California Water District
42135 Winchester Road
Temecula, CA 92590
Phone: (951) 296-6900 Fax: (951) 296-6863

RANCHO CALIFORNIA WATER DISTRICT
APPROVED
Corey Wallace — ENGINEERING MANAGER — 4/29/09 DATE
APPROVALS

Ken Cope 4/29/09	CE 4/29/09	TW 4/29/09
CONTRACTS/DATE	OPERATIONS/DATE	MAINTENANCE/DATE

VAIL LAKE PUMP STATION (PROJECT NO. D1317)

METER PAD PLAN AND SECTIONS

SHEET M-3 OF 35 SHEETS

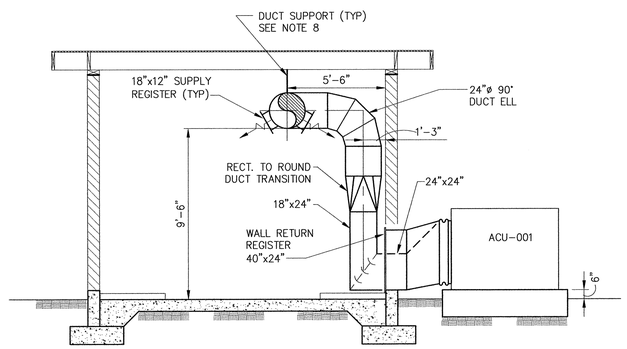

SECTION A/–
SCALE: 1/4" = 1'-0"

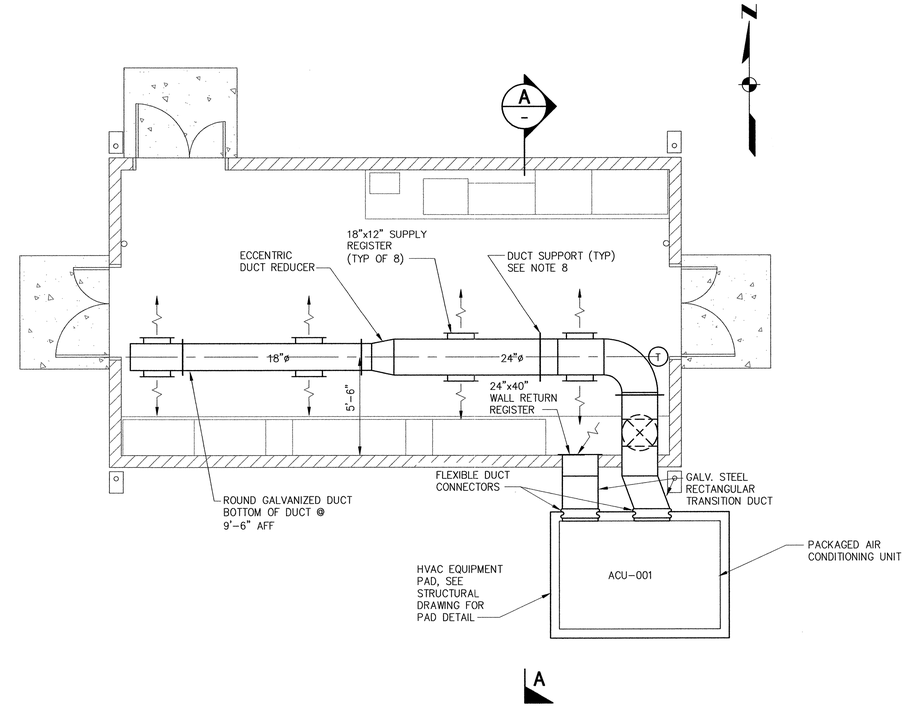

MECHANICAL PLAN
SCALE: 1/4" = 1'-0"

DUCT AND EQUIPMENT SPECIFICATIONS - ELECTRICAL BUILDING

1. ALL RECTANGULAR DUCTWORK IN THESE MECHANICAL SECTIONS SHALL BE OF LOCK-FORMING QUALITY, MADE FROM GALVANIZED STEEL SHEET CONFORMING TO ASTM A924.. DUCTWORK SHALL BE RATED FOR 2-INCH PRESSURE, POSTIVE AND VACUUM. REFER TO CMC TABLES 6-1 AND 6-7.
2. ALL ROUND DUCTWORK AND FITTINGS IN THESE MECHANICAL SECTIONS SHALL BE OF SPRIAL, LOCK-SEAM CONSTRUCTION, MADE FROM GALVANIZED STEEL SHEET CONFORMING TO ASTM A924. FITTINGS SHALL BE SPOT-WELD WITH STANDING SEAM CONSTRUCTION. DUCTWORK SHALL BE RATED FOR 2-INCH PRESSURE, POSITIVE AND VACUUM. REFER TO CMC TABLE 6-8.
3. ALL DUCTWORK INSTALLED OUTDOORS ON HEATING AND COOLING SYSTEMS SHALL BE LINED WITH RIGID GLASS FIBREBOARD INSULATION (KNAUF 'RIGID PLENUM LINER', OR EQUAL), 2" THICKNESS (R-8). DUCT LEAKAGE SHALL BE LIMITED TO NOT MORE THAN 6% OF DESIGN SYSTEM AIRFLOW.
4. DUCT/WALL-MOUNTED SUPPLY REGISTERS SHALL BE TITUS '300RL' SERIES, OR EQUAL.
   DUCT/WALL-MOUNTED RETURN REGISTERS SHALL BE TITUS '350RL/350RS' SERIES, OR EQUAL
5. PROVIDE FLEXIBLE DUCT CONNECTIONS (DURO-DYNE -'NEOPRENE', OR EQUAL) AT DUCT CONNECTIONS TO AIR HANDLERS AND PACKAGED UNITARY EQUIPMENT
7. PROVIDE OPPOSED-BLADE VOLUME CONTROL DAMPERS AT ALL SUPPLY DUCT DIFFUSER AND REGISTER INSTALLATIONS
8. PROVIDE DUCT SUPPORTS CONFORMING TO CHAPTER 5 OF "SMACNA LOW PRESSURE DUCT STANDARDS"
9. AIR CONDITIONING UNIT:
   A. TYPE: PACKAGED COOLING, NO HEAT, HORIZONTAL ORIENTATION
   B. CAPACITY: 107,000 BtuH SENSIBLE COOLING CAPACITY
   C. FAN: 3,200 CFM @ 0.5" W.C.
   D. REFRIGERANT: R-410a
   E. ELECTRICAL: 480 VOLT, 3-PHASE
   F. CONTROL: THERMOSTAT: LOW VOLTAGE, SINGLE-STAGE, W/SEPARATE FAN CONTROL
   G. EFFICIENCY: 10.6 EER
   H. ACCESSORIES:
   1. DISCONNECT SWITCH
   2. 0-100% DRY BULB ECONOMIZER
   3. 2-INCH PLEATED FILTERS
   4. DUCT SMOKE DETECTOR
   J. MODEL: TRANE TSC-120E4; OR EQUAL

2 0 2 4 6 8 10
SCALE: 1/4"=1'-0"

REGISTERED PROFESSIONAL ENGINEER
SEAN E. NEPRUD
No. M33458
Exp. 6/30/10
MECHANICAL
STATE OF CALIFORNIA
11-20-09

As-Built Drawing No.

REVISIONS			
NUMBER	DATE	INITIALS	DESCRIPTION
1	11/17/09	SEN	CONFORMED SET

SCALE: AS NOTED
DESIGNED BY: ZH
DRAWN BY: JC
CHECKED BY: SN
FILE NAME: 0687100-M04.dwg

Kennedy/Jenks Consultants
10920 VIA FRONTERA, SUITE 110
SAN DIEGO, CALIFORNIA 92127
K/J 0687100.00

APPROVED BY SEAN E NEPRUD, P.E.
REGISTERED ENGINEER NO. 33458 DATE –

Rancho Water
Rancho California Water District
42135 Winchester Road
Temecula, CA 92590
Phone: (951) 296-6900 Fax: (951) 296-6863

RANCHO CALIFORNIA WATER DISTRICT
APPROVED
COREY WALLACE 4/29/09
ENGINEERING MANAGER DATE
APPROVALS

KEN COPE 4/29/09	CE 4/29/09	TW 4/29/09
CONTRACTS/DATE	OPERATIONS/DATE	MAINTENANCE/DATE

VAIL LAKE PUMP STATION
(PROJECT NO. D1317)

ELECTRICAL BUILDING
MECHANICAL PLAN

SHEET
M-4
OF 35 SHEETS

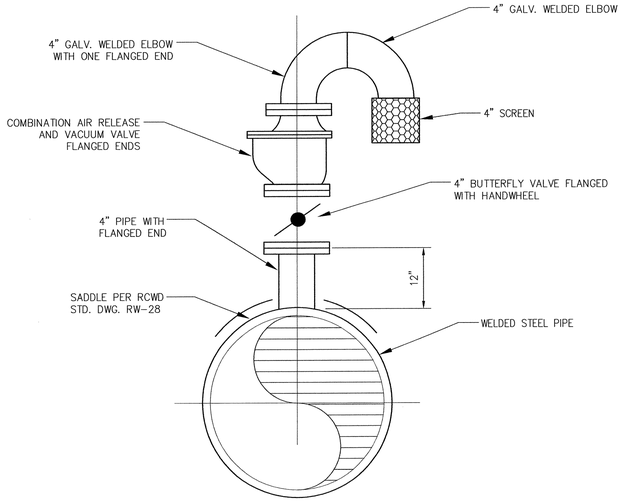

ABOVE GROUND 4" AV/AR VALVE DETAIL (1 / M-3)

NOT TO SCALE

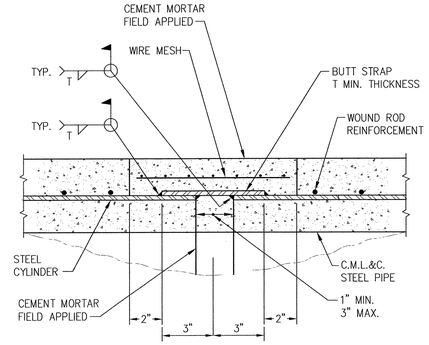

NOTE: BUTT STRAP THICKNESS SHALL BE EQUAL TO THICKNESS OF LARGEST CYLINDER.

48" BUTT STRAP DETAIL (2 / C-1; C-2, M-3)

NOT TO SCALE

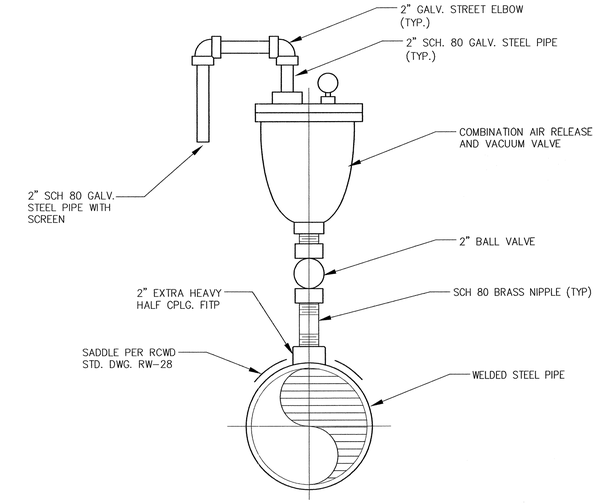

ABOVE GROUND 2" AV/AR VALVE DETAIL (3 / M-1)

NOT TO SCALE

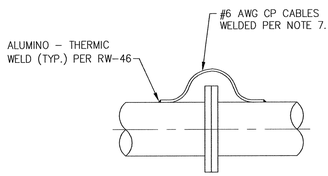

BONDED PIPE FLANGE JOINT

NOT TO SCALE

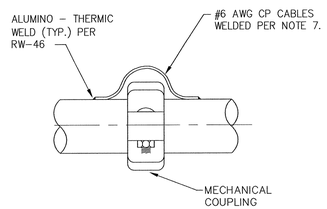

BONDED VICTAULIC COUPLING JOINT

NOT TO SCALE

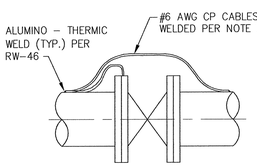

BONDED VALVE JOINT

NOT TO SCALE

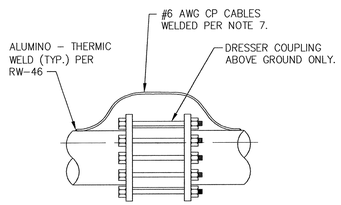

BONDED DRESSER COUPLING JOINT

NOT TO SCALE

BOND JOINTS DETAIL (4 / M-1)

NOT TO SCALE

NOTES:

1. CATHODIC PROTECTION (CP) CABLES SHALL BE A SOFT BROWN BARE COPPER STRAND WITH HIGH-MOLECULAR WEIGHT LOW DENSITY BLACK POLYETHYLENE (HMW PE) COVERING HAVING 4" TO 6" SLACK BETWEEN POINTS OF ATTACHMENT. CP CABLES SHALL NOT EXCEED 18" IN LENGTH UNLESS OTHERWISE APPROVED BY DISTRICT.
2. PIPE SHALL BE ASSEMBLED IN TRENCH PRIOR TO WELDING PER RW-46.
3. CABLE BONDED CONNECTIONS SHALL BE PROTECTED DURING FIELD MORTARING OF PIPE JOINT.
4. CONTINUITY TEST MUST BE CONDUCTED ON PIPELINE TO INSURE THAT BOND IS FUNCTIONING PROPERLY AFTER INSTALLATION OF EACH PIPE SECTION.
5. COLD-APPLY WAX TAPE COATING TO ALL BOLTS, NUTS AND FLANGES PER SPECIFICATIONS WRAP ALL COUPLINGS AND VALVE JOINTS WITH 8MIL. POLYETHYLENE.
6. 2 CP CABLES < 16" DIA.
   3 CP CABLES 16"-36"
   4 CP CABLES 36" OR GREATER
   ALL CP CABLES SHALL BE SPACED IN PARALLEL A MINIMUM OF 6" APART.
7. FOR BONDED RUBBER GASKET BELL & SPIGOT PIPE JOINT SEE RW-34 AND RW-35

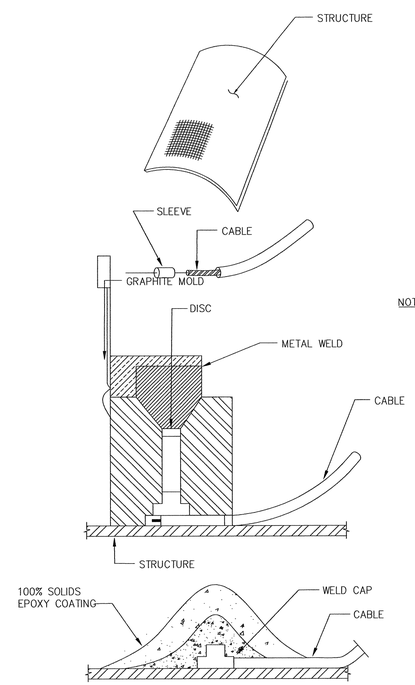

1. FILE STRUCTURE TO BARE METAL AND CLEAN SURFACE AT POINTS OF ATTACHMENT BY MAKING A 4-INCH SQUARE WINDOW IN THE COATING. THE EXPOSED METAL SURFACE SHALL BE CLEANED TO PRODUCE A BRIGHT METAL FINISH EQUIVALENT TO SS PC SP-10, "NEAR WHITE". RESIN IMPREGNATED GRINDING WHEELS WILL NOT BE ALLOWED.
2. STRIP INSULATION FROM WIRE OR CABLE AND ATTACH SLEEVE AS NECESSARY.
3. HOLD MOLD FIRMLY WITH OPENING AWAY FROM OPERATOR. IGNITE WITH FLINT GUN.
4. REMOVE SLAG FROM CONNECTION WITH CHIPPING HAMMER
5. COVER WELD NUGGET CONNECTION WITH A FAST CURE 100% SOLIDS EPOXY COATING METAL OR WELD CAP.
6. APPLY CONCRETE BONDING AGENT AND REPAIR CEMENT MORTAR COATING AFTER WELD COATING CURES.

NOTES:

1. ENDOTHERMIC WELDING SHALL USE ERICO PRODUCTS, INC. "CADWELD" SYSTEM, CONTINENTAL INDUSTRIES, INC. "THERMOWELD" SYSTEM, OR APPROVED EQUAL.
2. WIRE OR BONDED CABLE CONNECTIONS SHALL BE PROTECTED DURING FIELD MORTORING OR WAX TAPE COATING OF BONDED JOINTS.
3. CARTRIDGE TYPE, SIZE AND WEIGHT SHALL BE AS RECOMMENDED BY THE MANUFACTURE FOR THE TYPE OF PIPE (STEEL, DUCTILE IRON, OR CAST IRON) TO WHICH THE CATHODIC PROTECTION CABLE OR WIRES IS TO BE WELDED, SIZE OR CABLE OR WIRE AND WELDER MOLD BEING USED.
4. AS SOON AS WELD COOLS THE WELD SHALL BE TESTED BY STRIKING A SHARP PLOW WITH A 22-OUNCE HAMMER WHILL PULLING FIRMLY ON WIRE OR CABLE. ALL UNSOUND WELDS SHALL BE RE-WELDED A MINIMUM OF 3-INCHES AWAY FROM THE FAILED LOCATION AND RE-TESTED.

ALUMINO-THERMIC WELD DETAIL (5 / M-3)

NOT TO SCALE

DIGALERT
DIAL TOLL FREE 811 AT LEAST TWO DAYS BEFORE YOU DIG
UNDERGROUND SERVICE ALERT(USA) OF SOUTHERN CALIFORNIA

REGISTERED PROFESSIONAL ENGINEER MATT A. TEBBETTS No. C 24087 Exp 12-31-09 CIVIL STATE OF CALIFORNIA
11-23-09

As-Built Drawing No.

REVISIONS			
NUMBER	DATE	INITIALS	DESCRIPTION
1	11/17/09	NBM	CONFORMED SET

SCALE: AS SHOWN
DESIGNED BY: K. TIRADO/ R. LYONS
DRAWN BY: BXB
CHECKED BY: B. THOMAS
FILE NAME: 0687100-M05.dwg

Kennedy/Jenks Consultants
10920 VIA FRONTERA, SUITE 110
SAN DIEGO, CALIFORNIA 92127
K/J 0687100.00

APPROVED BY MATT A. TEBBETTS, P.E.
REGISTERED ENGINEER NO. 24087 DATE 11-23-09

Rancho Water
Rancho California Water District
42135 Winchester Road
Temecula, CA 92590
Phone: (951) 296-6900 Fax: (951) 296-6863

RANCHO CALIFORNIA WATER DISTRICT
APPROVED
Corey Wallace — ENGINEERING MANAGER — 4/29/09 DATE
APPROVALS

Ken Cope 4/29/09	CE 4/29/09	TW 4/29/09
CONTRACTS/DATE	OPERATIONS/DATE	MAINTENANCE/DATE

VAIL LAKE PUMP STATION (PROJECT NO. D1317)

MISCELLANEOUS DETAILS

SHEET M-5 OF 35 SHEETS

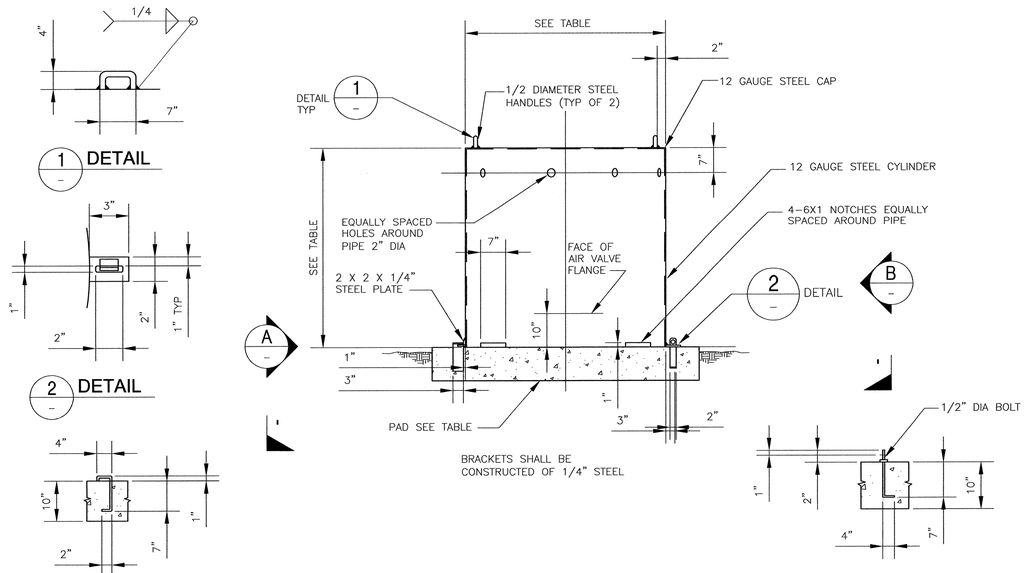

TABLE OF VALUES

AVAR SIZE	DIA OF COVER	HEIGHT OF COVER	CONCRETE PAD DIMS.
6"	48"	48"	64" SQ

AIR VACUUM/AIR RELEASE VALVE COVER DETAIL (8)

NO SCALE

1. 6" FLANGED TOP OUTLET, REINFORCED WITH REINFORCING COLLAR
2. 6" STD. WT. CML/CMC FLANGED 90 ELL
3. 6" (150 PSI) RESILIENT SEATED GATE VALVE
4. VALVE COVER AND RISER DETAIL PER RCWD STANDARD DRAWING RW-30
5. 6" FLANGE, ANSI B16.5, CLASS 150 (MINIMUM)
6. 6" VICTAULIC COUPLING, STYLE 77 WITH EITHER A ROLL GROOVE OR A GROOVED RIPPLE ON EACH END OF PIPE
7. 6" STD. WT. CML/CMC WSP
8. 6" COMBINATION AIR RELEASE AND VACUUM VALVE WITH FLANGED INLET AND OUTLET, APCO 151C
9. 6" STANDARD WEIGHT SHORT RADIUS 180° RETURN, ONE END FLANGED
10. AIR VALVE SCREEN
11. AIR VALVE COVER PER DETAIL 8 THIS SHEET
12. 2' CUT-TO-FIT, SHIP FLANGE LOOSE. BURIED NUT AND BOLT THREADS SHALL BE LUBRICATED WITH GRAPHITE AND OIL, THEN COATED WITH COLD-APPLY WAX TAPE.

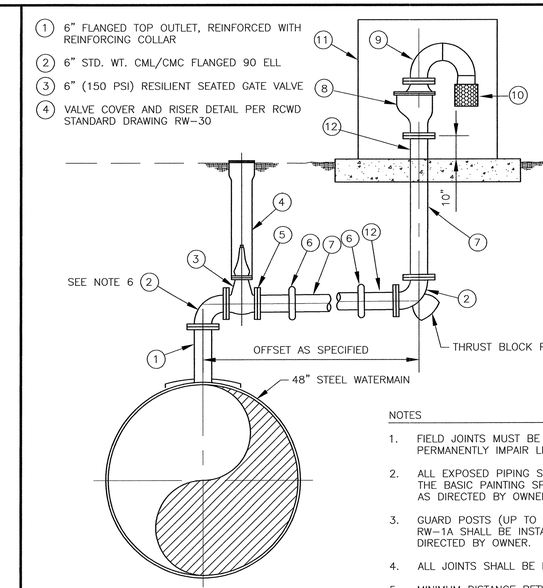

NOTES

1. FIELD JOINTS MUST BE FLANGED OR WELDED BUT SHALL NOT PERMANENTLY IMPAIR LINING OF PIPE.
2. ALL EXPOSED PIPING SHALL BE FIELD PAINTED IN ACCORDANCE WITH THE BASIC PAINTING SPECIFICATIONS. THE FINAL TWO COATS SHALL BE AS DIRECTED BY OWNER.
3. GUARD POSTS (UP TO 4 TOTAL) PER RCWD STANDARD DRAWINGS RW-1A SHALL BE INSTALLED. LOCATION OF SAME SHALL BE AS DIRECTED BY OWNER.
4. ALL JOINTS SHALL BE BONDED PER DETAIL 4 ON SHEET M-5.
5. MINIMUM DISTANCE BETWEEN 48" WATERMAIN AND AVAR VALVE AS DIRECTED BY OWNER.

6" AIR VACUUM/AIR RELEASE VALVE INSTALLATION (9)

NO SCALE

C-3

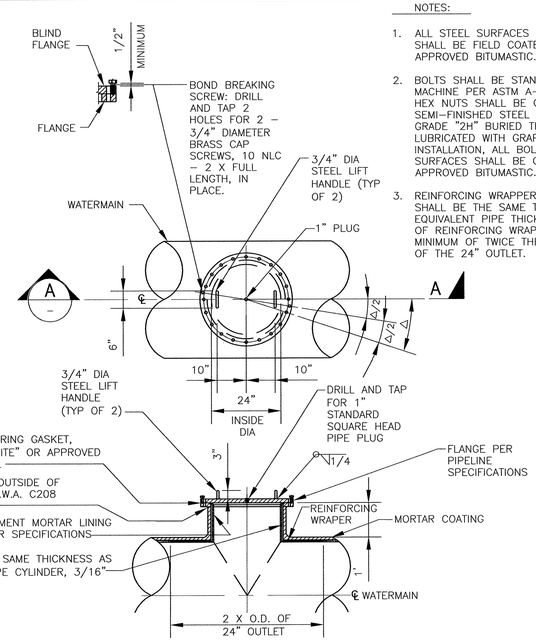

NOTES:

1. ALL STEEL SURFACES INCLUDING BOLTS SHALL BE FIELD COATED WITH AN APPROVED BITUMASTIC.
2. BOLTS SHALL BE STANDARD HEX HEAD MACHINE PER ASTM A-307, GRADE "B". HEX NUTS SHALL BE COLD-PRESS SEMI-FINISHED STEEL PER ASTM A-194, GRADE "2H" BURIED THREADS SHALL BE LUBRICATED WITH GRAPHITE AND OIL. AFTER INSTALLATION, ALL BOLTS AND STEEL SURFACES SHALL BE COATED WITH AN APPROVED BITUMASTIC.
3. REINFORCING WRAPPER AS A MINIMUM, SHALL BE THE SAME THICKNESS AS EQUIVALENT PIPE THICKNESS. THE LENGTH OF REINFORCING WRAPPER SHALL BE A MINIMUM OF TWICE THE OUTSIDE DIAMETER OF THE 24" OUTLET.

7 24" MANWAY DETAIL

NO SCALE

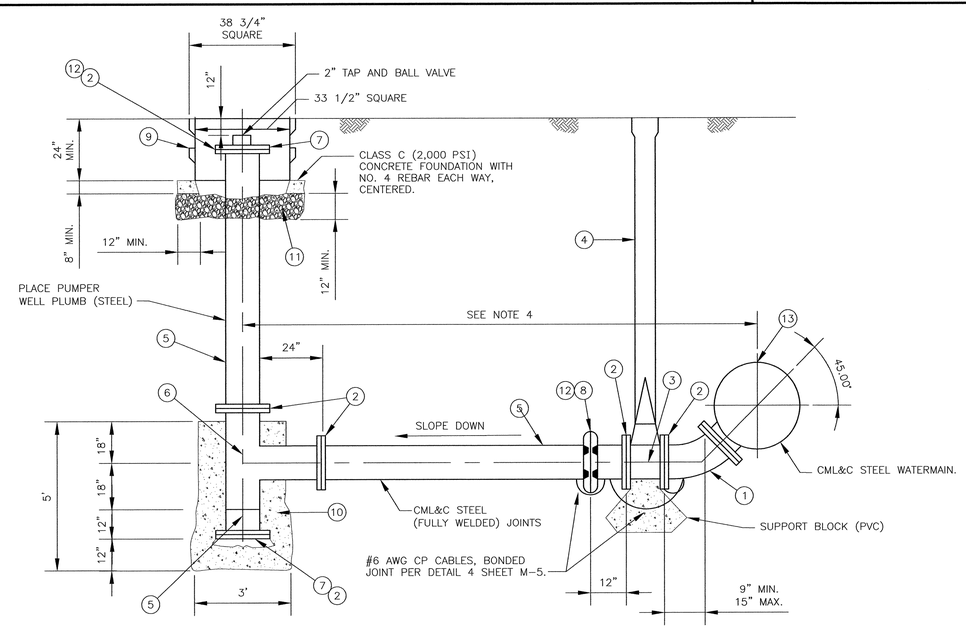

MATERIALS LIST

1. 12" FLANGED OUTLET OR WELD SADDLE PER RW-28 (ON WELDED STEEL MAIN) WITH FLANGED CML&C 45° ELL.
2. 12" FLANGE.
3. 12" FLANGED RESILIENT SEATED GATE VALVE (150 PSI).
4. VALVE CAP AND RISER PER RCWD STD. DWG. RW-30.
5. 12" CML&C WSP AND FITTINGS.
6. 12" CML&C WSP TEE.
7. 12" BLIND FLANGE.
8. 12" NO. 77 VICTAULIC COUPLING AND NIPPLE. (STEEL PIPE)
9. PRECAST CONCRETE VAULT, BROOKS 733A WITH 3/8" BOLT DOWN DIAMOND PLATE STEEL COVER.
10. CONCRETE THRUST BLOCK (5' X 3' X 3'), PLACED AGAINST UNDISTURBED EARTH. CONCRETE SHALL BE CLASS 'C' (2,000 psi) CONCRETE.
11. 1" CRUSHED ROCK BASE.
12. 2' CUT TO FIT. SHIP FLANGE LOOSE.
13. WATERMAIN.

NOTES:

1. FIELD JOINTS MUST BE FLANGED OR WELDED BUT SHALL NOT PERMANENTLY IMPAIR LINING OF PIPE.
2. GROUT ALL BARE STEEL AND IRON.
3. COLD-APPLY WAX TAPE COATING TO ALL BOLTS, NUTS AND FLANGES PER SPECIFICATIONS.
4. PLACEMENT OF BLOW-OFF AND GUARD POSTS (UP TO 4 TOTAL) SHALL BE PER RW-1A. MINIMUM DISTANCE BETWEEN 48" WATERMAIN AND BLOW-OFF SHALL BE 15 FEET OR AS DIRECTED BY OWNER.
5. REFER TO DETAIL 4 ON THIS SHEET FOR COATING BONDED JOINTS.

MAIN (13)	BLOW OFF SIZE
48"	12"

12" BLOW-OFF INSTALLATION (10)

NO SCALE

REGISTERED PROFESSIONAL ENGINEER MATTHEW A. TEBBETTS No. C 24087 Exp 12.31.09 CIVIL STATE OF CALIFORNIA 11.23.09

As-Built Drawing No.

REVISIONS

NUMBER	DATE	INITIALS	DESCRIPTION
1	11/17/09	NBM	CONFORMED SET

SCALE: AS NOTED
DESIGNED BY: RL
DRAWN BY: STAFF
CHECKED BY: RL
FILE NAME: 0687100-M06.dwg

Kennedy/Jenks Consultants
10920 VIA FRONTERA, SUITE 110
SAN DIEGO, CALIFORNIA 92127
K/J 0687100.00

APPROVED BY MATT A. TEBBETTS, P.E.
REGISTERED ENGINEER NO. 24087 DATE 11.23.09

Rancho Water
Rancho California Water District
42135 Winchester Road
Temecula, CA 92590
Phone: (951) 296-6900 Fax: (951) 296-6863

RANCHO CALIFORNIA WATER DISTRICT
APPROVED
Corey Wallace — ENGINEERING MANAGER — 4/29/09 DATE
APPROVALS

Ken Cope 4/29/09	CE 4/29/09	TW 4/29/09
CONTRACTS/DATE	OPERATIONS/DATE	MAINTENANCE/DATE

VAIL LAKE PUMP STATION (PROJECT NO. D1317)

MISCELLANEOUS DETAILS SHEET 2

SHEET M-6 OF 35 SHEETS

LAST EDIT DATE: Nov 24, 2009 - 12:20pm

K/J CAD FILE: \\rw2\projects\RW\2006_Other\0687100_RCWD_Vail_Lake\Eng_and_Design\CAD\Pumps\95percent_DESIGN\0687100-M06.dwg

GENERAL STRUCTURAL NOTES

GENERAL

1. DESIGN AND CONSTRUCTION SHALL CONFORM TO THE 2007 CALIFORNIA BUILDING CODE AND THE REFERENCED BUILDING CODE STANDARDS.
2. THESE NOTES AS WELL AS THE TYPICAL DETAILS APPLY TO ALL PARTS OF THE PROJECT, UNLESS NOTED OTHERWISE.
3. SHOP DRAWINGS FOR THIS CONTRACT SHALL BE COORDINATED WITH FAVORABLY REVIEWED EQUIPMENT MANUFACTURER'S DRAWINGS.
4. DIMENSIONS NOTED WITH AN ASTERISK, " * ", ARE TO BE COORDINATED WITH FAVORABLY REVIEWED EQUIPMENT MANUFACTURER.

PERMITS AND INSPECTIONS

1. THE CONTRACTOR IS RESPONSIBLE FOR OBTAINING ALL PERMITS AND INSPECTIONS REQUIRED AS DESCRIBED IN THE SPECIFICATIONS.
2. THE CONTRACTOR SHALL SELECT, INSTALL AND MAINTAIN SHORING, SHEETING, BRACING AND SLOPING AS NECESSARY TO MAINTAIN SAFE EXCAVATIONS. THE CONTRACTOR SHALL BE RESPONSIBLE FOR ENSURING FULL COMPLIANCE WITH 29 CFR PART 1926 OSHA SUBPART P EXCAVATIONS AND TRENCHES REQUIREMENTS. ALL EARTHWORK SHALL BE PERFORMED IN STRICT ACCORDANCE WITH APPLICABLE LAW, INCLUDING LOCAL ORDINANCES, CALOSHA, CALIFORNIA CIVIL CODE AND CALIFORNIA DEPARTMENT OF INDUSTRIAL SAFETY REQUIREMENTS, AND APPLICABLE OSHA REQUIREMENTS.

SPECIAL INSPECTIONS AND STRUCTURAL OBSERVATIONS

1. THE CONTRACTOR SHALL NOTIFY THE ENGINEER 48-HOURS BEFORE PLACEMENT OF REINFORCING STEEL AND CONCRETE SO THAT THE SUBGRADE OF EXCAVATIONS MAY BE INSPECTED BY THE GEOTECHNICAL ENGINEER.
2. THE GEOTECHNICAL ENGINEER SHALL VERIFY BACKFILL MATERIAL AND BACKFILLING PROCEDURES AND PROVIDE SOIL COMPACTION TESTS.
3. STRUCTURAL OBSERVATION SHALL BE PROVIDED BY THE DESIGN ENGINEER(S) OF RECORD AND/OR RANCHO CALIFORNIA WATER DISTRICT IN ACCORDANCE WITH IBC 2006, SECTION 1709. STRUCTURAL OBSERVATION SHALL CONSIST OF SITE VISITS AT INTERVALS APPROPRIATE TO THE STAGE OF CONSTRUCTION TO OBSERVE CONSTRUCTION IN PROGRESS AND REVIEW OF TESTING AND INSPECTION REPORTS FOR GENERAL COMPLIANCE WITH THE CONSTRUCTION DOCUMENTS RELATING TO THE STRUCTURAL WORK AND THE NONSTRUCTURAL COMPONENTS AND EQUIPMENT ANCHORAGE.
4. SPECIAL INSPECTION IN ACCORDANCE WITH IBC 2006, SECTION 1704, SHALL BE REQUIRED AS INDICATED IN THE SPECIAL INSPECTION AND TESTING SCHEDULE ON THIS SHEET.

SOIL AND FOUNDATIONS

1. GEOTECHNICAL INVESTIGATIONS FOR DESIGN PURPOSES FOR THIS PROJECT WERE MADE FOR RANCHO CALIFORNIA WATER DISTRICT BY LEIGHTON CONSULTING, INC IN A REPORT DATED SEPTEMBER 14, 2007.
2. IN ACCORDANCE WITH THE CBC CHAPTER 18 THE SOILS DOWNSTREAM FROM THE VAIL LAKE DAM IN RANCHO, CALIFORNIA ARE GENERALLY CLASSIFIED AS LOOSE TO MEDIUM DENSE SILTY SAND UNDERLAIN BY GRANULAR ALLUVIAL SOILS.
3. THE DESIGN BEARING CAPACITY OF THE SOILS IS 1,500 PSF FOR FOOTINGS. BEARING CAPACITY OF SOILS ARE FOR DEAD AND LIVE LOADS FOR FOUNDATIONS.
4. SOILS SHALL BE EXCAVATED TO THE ELEVATIONS INDICATED ON THE DRAWINGS FOR FOUNDATIONS. THE SUBGRADE SHALL BE PREPARED AS INDICATED ON THE DRAWINGS AND SPECIFICATIONS AND APPROVED BY THE GEOTECHNICAL ENGINEER. EXCAVATED MATERIAL SHALL BE REPLACED WITH STRUCTURAL FILL AS SHOWN ON THE DRAWINGS. FOUNDATIONS SHALL BE CONSTRUCTED AGAINST UNDISTURBED NATIVE COMPETENT MATERIAL OR COMPACTED STRUCTURAL FILL.

LOADING CRITERIA

1. MINIMUM LOADING REQUIREMENTS PER CHAPTER 16 OF THE 2007 CALIFORNIA BUILDING CODE INCLUDING LATEST REVISION.
2. DEAD LOAD: AS CALCULATED
3. LIVE LOADS:
   - FIXED LADDERS — 300 LBS POINT
   - HANDRAILS, GUARDRAILS AND GRAB BARS — 50 PLF AT TOP RAIL, 200 LBS POINT
   - FLOOR – LIGHT MANUFACTURING/STORAGE — 125 PSF UNIFORM, 2,000 LBS POINT
   - FLOOR – HEAVY MANUFACTURING/STORAGE — 250 PSF UNIFORM, 3,000 LBS POINT
   - ROOF (REDUCTION FOR UNIFORM LOAD) — 20 PSF UNIFORM, 2,000 LBS POINT
   - CEILING – WITH STORAGE AREA — 20 PSF UNIFORM
   - GRATING, CHECKERED PLATE, ACCESS HATCHES — EQUAL TO FLOOR LIVE LOAD
   - SIDEWALKS & VEHICULAR DRIVEWAYS — 250 PSF UNIFORM, 8,000 LBS POINT
   - UNRESTRICTED VEHICULAR ACCESS — AASHTO HS20-44
4. WIND LOAD:
   - IMPORTANCE FACTOR, Iw — 1.15 (ASCE 7-05 TABLE 6-1)
   - BASIC WIND SPEED — 80 MPH (ASCE 7-05 FIGURE 16-1)
   - EXPOSURE — C (ASCE 7-05 SECTION 6.5.6)
5. SEISMIC LOAD:
   - OCCUPANCY CATEGORY — III(IBC TABLE 1604.5)
   - SEISMIC IMPORTANCE FACTOR, I — 1.25 (ASCE 7-05 TABLE 11.5-1)
   - SEISMIC IMPORTANCE FACTOR, Ip — 1.50 (ASCE 7-05 SECTION 13.1.3)
   - SOIL PROFILE TYPE — S_D (REFER TO UBC TABLE 1613.5.2)
   - SEISMIC DESIGN RESPONSE PARAMATER S_{DS} — 0.486g
   - SEISMIC DESIGN RESPONSE PARAMATER S_{D1} — 0.258g
   - SEISMIC DESIGN CATEGORY — D
   - SITE COEFFICIENT F_a — 1.4
   - SITE COEFFICIENT F_v — 2.2

REINFORCING STEEL

1. REINFORCING BARS SHALL BE ASTM A615-GRADE 60.
2. WELDED WIRE FABRIC SHALL CONFORM TO ASTM A185.
3. ARRANGEMENT AND DETAILING OF REINFORCING STEEL, INCLUDING BAR SUPPORTS AND SPACERS, SHALL BE IN ACCORDANCE WITH THE LATEST ACI 315 DETAILING MANUAL.
4. REINFORCING SHALL LAP A MINIMUM OF OF 1.3 Ld AT SPLICES UNLESS OTHERWISE SHOWN. WHERE Ld IS THE TENSION DEVELOPMENT LENGTH. WHEN BARS OF DIFFERENT SIZE LAP TO EACH OTHER, SPLICE LENGTH FOR THE SMALLER BAR CAN BE USED. DOWELS SHALL HAVE THE SAME SIZE AND SPACING AS THAT OF THE REINFORCING STEEL THEY ARE SPLICED AND SHALL HAVE A MINIMUM LAP AS NOTED ABOVE. BAR SPLICES SHALL BE STAGGERED.
5. HOOK REINFORCING BARS INTERUPTED BY OPENINGS.
6. NO WELDING OF REINFORCING BARS SHALL BE PERMITTED, UNLESS APPROVAL IN WRITING IS OBTAINED FROM THE ENGINEER PRIOR TO CONSTRUCTION.
7. DIMENSIONS TO REINFORCING ARE TO BAR CENTERLINES, UNLESS NOTED OTHERWISE BAR COVER IS CLEAR DISTANCE BETWEEN THE BAR AND THE CONCRETE SURFACE. UNLESS NOTED OR SHOWN OTHERWISE BAR COVER FOR REINFORCING STEEL SHALL BE AS FOLLOWS:

FOOTINGS AND BASE SLABS:
- FORMED SURFACES AND BOTTOMS ON CONCRETE WORK MAT — 2-INCH
- BOTTOMS AND SIDES IN CONTACT WITH EARTH — 3-INCH

SUSPENDED SLABS:
- FORMED SURFACES EXPOSED TO EARTH, WATER OR WEATHER — 2-INCH
- TOP AND BOTTOM BARS DRY CONDITIONS — 1-INCH

BEAMS AND COLUMNS:
- DRY CONDITIONS:
  - STIRRUPS, SPIRALS AND TIES — 1 1/2-INCH
  - PRINCIPAL REINFORCEMENT — 2-INCH
- EXPOSED TO EARTH, WATER OR WEATHER:
  - STIRRUPS, SPIRALS AND TIES — 2-INCH
  - PRINCIPAL REINFORCEMENT — 2 1/2-INCH

WALLS:
- LESS THAN 12-INCHES THICK — 1 1/2-INCH
- 12 INCHES OR OVER IN THICKNESS — 2 1/2-INCH

CONCRETE

1. CEMENT SHALL BE ASTM C150 TYPE II FOR ALL STRUCTURES. CONCRETE SHALL HAVE A MINIMUM 28 DAY COMPRESSIVE STRENGTH AS NOTED IN THE TABLE BELOW AND AS FURTHER DEFINED IN THE SPECIFICATIONS:

CONCRETE STRENGTH (PSI)		
TYPE	STRENGTH	LOCATION
C	4,000	ELECTRICAL BUILDING, PUMP STATION & FLOWMETER PAD
E	2,500	MISCELLANEOUS STRUCTURES & SITEWORK

2. CONCRETE CONSTRUCTION SHALL CONFORM TO ACI 318 (LATEST EDITION) INCLUDING BAR BENDS AND HOOKS, UNLESS DETAILED OTHERWISE.
3. SUBMIT CONCRETE AND MASONRY LIFT DRAWINGS SHOWING THE LOCATION OF CONSTRUCTION JOINTS, WATERSTOPS AND OTHER TYPES OF JOINTS OTHER THAN SPECIFIED OR SHOWN ON THE DRAWINGS FOR FAVORABLE REVIEW BY THE ENGINEER BEFORE START OF WORK ON FORMS, REINFORCING STEEL OR PLACING CONCRETE. ANY ADDITIONAL VERTICAL OR HORIZONTAL CONSTRUCTION JOINTS SHALL HAVE A STANDARD KEYWAY AND SHALL BE FAVORABLY REVIEWED BY THE ENGINEER. REFER TO SPECIFICATIONS AND TYPICAL DETAILS FOR ADDITIONAL INFORMATION. CONSTRUCTION JOINTS SHALL BE ROUGHENED TO 1/4-INCH AMPLITUDE.
4. OPENINGS, PIPE SLEEVES, CONDUITS, INSERTS AND OTHER EMBEDDED ITEMS SHALL BE IN PLACE BEFORE CONCRETE IS PLACED. IT IS THE CONTRACTOR'S RESPONSIBILITY TO COORDINATE ARCHITECTURAL, CIVIL, MECHANICAL, ELECTRICAL, LANDSCAPING, HVAC, PLUMBING, INSTRUMENTATION AND OTHER PLANS FOR ITEMS REQUIRING SLEEVES AND EMBEDMENTS IN CONCRETE WHICH ARE NOT INDICATED OR SHOWN ON STRUCTURAL DRAWINGS. NO PIPES OR SLEEVES SHALL PASS THROUGH STRUCTURAL MEMBERS (UNLESS SHOWN ON STRUCTURAL DRAWINGS). COORDINATE WITH EQUIPMENT MANUFACTURERS DRAWINGS FOR ANCHORING DEVICES.
5. UNLESS OTHERWISE NOTED, ALL EXPOSED EDGES AND CORNERS SHALL BE CHAMFERED 3/4-INCH. INTERIOR FLOOR SLABS AND EXTERIOR SIDEWALKS SHALL HAVE TOOLED
6. 3/8-INCH RADIUS CONSTRUCTION JOINT.
EACH FACE CONCRETE SHALL BE REINFORCED A MINIMUM OF NO. 5 BARS AT 12-INCHES EACH WAY.

WOOD FRAMING

1. FRAMING LUMBER SHALL BE DOUGLAS FIR-LARCH AND BE GRADE MARKED PER W.C.L.I.B. SPECIFICATIONS:
   - A) STUDS:
     - 2" TO 4" THICK, 2" TO 4" WIDE, INTERIOR, NON-BEARING PARTITIONS, STUD GRADE.
     - 2" TO 4" THICK, 2" AND WIDER, EXTERIOR, BEARING WALLS, NO. 1 AND BETTER GRADE.
   - B) JOISTS AND RAFTERS:
     - 2" TO 4" THICK, 2" TO 4" WIDE, SELECT STRUCTURAL GRADE.
     - 2" TO 4" THICK, 5" AND WIDER, SELECT STRUCTURAL GRADE.
   - C) BEAMS AND HEADERS:
     - 2" TO 4" THICK, 5" AND WIDER, NO. 1 AND BETTER GRADE.
     - 5" THICK AND GREATER, ALL WIDTHS, NO. 1 AND BETTER GRADE.
   - D) POSTS AND COLUMNS:
     - 2" TO 4" THICK, 2" TO 4" WIDE, NO. 1 AND BETTER GRADE.
     - 5" THICK AND GREATER, ALL WIDTHS, SELECT STRUCTURAL GRADE.
   - E) TOP PLATES:
     - 2" THICK X 4" WIDE, INTERIOR, NON-BEARING PARTITIONS, STUD GRADE.
     - 2" THICK X 4" WIDE, EXTERIOR, BEARING WALLS, NO. 1 AND BETTER GRADE.
   - F) BLOCKING:
     - 2" TO 4" THICK, 2" AND WIDER, STUD GRADE.
   - G) SILL PLATES:
     - 2" THICK X 4" WIDE, INTERIOR, NON-BEARING PARTITIONS, PRESSURE TREATED STUD GRADE.
     - 2" TO 4" THICK, 4" AND WIDER, EXTERIOR, PRESSURE TREATED NO. 1 AND BETTER GRADE.
2. STRUCTURAL PLYWOOD SHALL BE DOUGLAS FIR CONFORMING TO COMMERCIAL STANDARDS PSI-74 AND GRADE STAMPED N.F.P.A. ALL ROOFS AND WALLS SHALL BE SHEATHED AND ALL UNSUPPORTED EDGES SHALL BE BLOCKED ACCORDING TO THE TYPICAL NAILING SCHEDULE:
   - A) ROOF SHEATHING:
     - MECHANICAL ROOM ROOF – 4'x8'x3/4" SHEETS, APPEARANCE GRADE A-C EXT (A SIDE DOWN).
     - OTHER – 4'x8'x3/4" SHEETS, APPEARANCE GRADE C-D EXT.
   - B) WALL SHEATHING:
     - 4'x8'x1/2" SHEETS, APPEARANCE GRADE B-C EXT. (B SIDE INTERIOR).
3. ALL LUMBER HARDWARE (HANGERS, FRAMING ANCHORS, STRAPS, ETC) AS SHOWN ARE STRONG-TIE CONNECTORS AS MANUFACTURED BY SIMPSON COMPANY OF SAN LEANDRO, CALIFORNIA. APPROVED EQUAL HARDWARE MAY BE SUBSTITUTED IF FAVORABLY REVIEWED BY THE ENGINEER.
4. NO STRUCTURAL MEMBER SHALL BE CUT, NOTCHED, OR DRILLED UNLESS SPECIFICALLY SHOWN OR APPROVED BY THE ENGINEER.
5. MAXIMUM MOISTURE CONTENT OF LUMBER SHALL NOT EXCEED 19% FOR ALL FRAMING LUMBER.
6. GLULAM BEAMS – ALL LAMINATIONS SHALL BE OF DOUGLAS FIR (COAST REGION); COMBINATION 24F,(SEE SPECIFICATION SECTION 06100 FOR GRADE), FOR HORIZONTAL MEMBERS AND COMBINATION 4 FOR VERTICAL MEMBERS.

WOOD FASTENERS

1. PROVIDE WASHERS UNDER HEADS AND NUTS OF ALL BOLTS BEARING ON WOOD.
2. ALL NAILING SHALL BE STAGGERED TO AVOID SPLITTING OF MEMBERS.
3. BOLTS USED IN FRAMING SHALL BE ASTM A307 WITH STANDARD HEX HEAD DIMENSIONS CONFORMING TO ANSI/ASME 318.2.1.
4. PLATES USED IN ROOF FRAMING SHALL BE ASTM A36 OR ASTM A572 GRADE 50.
5. PROVIDE AND INSTALL ALL BOLTS AND NAILS TO ALL CONNECTORS PER THE MANUFACTURER'S RECOMMENDATIONS.
6. ALL NAILING SHALL BE IN ACCORDANCE WITH CHAPTER 23 OF THE CALIFORNIA BUILDING CODE, 2007 EDITION. USE COMMON TYPE NAILS UNLESS OTHERWISE SPECIFIED. ALL FASTENERS IN CONTACT WITH PRESSURE TREATED WOOD SHALL BE HOT DIPPED GALVANIZED FASTENERS (MEETING ASTM A153) AND CONNECTORS (ASTM A653 CLASS G185 SHEET), OR BETTER.

SPECIAL INSPECTION AND TESTING SCHEDULE

1. **CONCRETE**
   - [X] CONTINUOUS PLACEMENT INSPECTION
   - [X] EXCEPTIONS: 2,500 PSI OR TYPE E CONCRETE
   - [X] 4 CYLINDERS PER 100 CUBIC YARDS*
   - TEST: 2 @ 7 DAYS, 2 @ 28 DAYS.
   - * EACH MIX PLACED, EACH DAY PLACED
2. **BOLTS INSTALLED IN CONCRETE**
   - [X] ALL BOLTS
   - [ ] LOCATION: ____________________
3. **SPECIAL MOMENT-RESISTING CONCRETE FRAME**
   - NOT USED
4. **REINFORCING STEEL AND PRESTRESSING TENDONS**
   - [X] PLACEMENT INSPECTION
   - [ ] STRESSING AND GROUTING OF TENDONS
5. **STRUCTURAL WELDING**
   - PERIODIC VISUAL INSPECTION:
   - [X] SINGLE PASS FILLET WELDS < 5/16"
   - [ ] STEEL DECK
   - [ ] WELDED STUDS
   - [ ] COLD FORMED STUDS AND JOINTS
   - [ ] STAIR AND RAILING SYSTEMS
   - CONTINUOUS VISUAL INSPECTION
   - [ ] ALL OTHER WELDING
   - [X] REINFORCING STEEL
   - [ ] OTHER ____________________
   - SPECIAL MOMENT-RESISTING FRAMES:
   - [ ] UT ALL CJP GROOVE WELDS
   - [ ] UT ALL CJP GROOVE WELDS > 5/16"
   - [ ] UT ALL PP GROOVE WELDS IN COLUMN SPLICES > 3/4"
   - [ ] UT COLUMN FLANGES AT BEAM FLANGES WELDS
   - [ ] NDT RATE REDUCTION PER UBC 1703.1 APPLIES
   - [ ] OTHER ____________________
6. **HIGH STRENGTH BOLTING**
   - SNUG TIGHT: [ ] ALL [X] AS INDICATED
   - FULL PRETENSION: [ ] ALL [X] AS INDICATED
7. **STRUCTURAL MASONRY** f'm=1,500 psi
   - (FULL STRESSES) OR (HALF STRESSES)
   - VERIFCATION OF f'm: [ ] PRISM TESTS [ ] PRISM TEST RECORD [X] UNIT STRENGTH
   - [X] CONTINUOUS INSPECTION
   - [ ] PERIODIC INSPECTION

TEST	BEFORE	DURING
PRISMS	[ ]	[X]3/5,000 sf
UNITS	[X]	[ ]
GROUT	[X]	[X]3/WEEK
MORTAR	[ ]	[X]3/WEEK

8. **REINFORCED GYPSUM CONCRETE**
   - NOT USED
9. **INSULATING CONCRETE FILL**
   - [ ] PERIODIC INSPECTION ______________
   - [ ] STRENGTH TESTING ________________
10. **SPRAY-APPLIED FIRE RESISTIVE MATERIALS**
    - [ ] PERIODIC INSPECTION
    - [ ] TESTING PER UBC STD. 7-6
11. **SPECIAL GRADING, EXCAVATION, AND FILLING**
    - [X] PERIODIC INSPECTION
    - [X] SUBGRADE TESTS _______________
    - [X] COMPACTION TESTS _______________
    - [X] VERIFY BEARING STRATA ____________
12. **SPECIAL CASES**
    - [X] SHEAR WALL/DIAPHRAGM NAILING
    - [X] ANCHORAGE TO EXISTING CONCRETE/MASONRY (SPEC 05100):
      - [X] INSTALLATION INSPECTION
      - [X] PROOF LOAD TEST TO TWICE ALLOWABLE TENSION VALUE: (SUBMIT TEST LOADS TO ENGINEER PRIOR TO TEST)
        - 10% OF ANCHORS FOR DOWELS
        - 10% OF ANCHORS FOR SILL PLATE BOLTS
        - 50% OF ANCHORS FOR EQUIP ANCHORAGE
        - 100% OF ANCHORS FOR HOLD-DOWN BOLTS
        - 100% FOR ALL OTHER ANCHORS
    - [X] EXCAVATION SUPPORT/SHORING
    - [ ] UNDERPINNING

STRUCTURAL ABBREVIATIONS

&	AND
@	AT
#	NUMBER
ø	DIAMETER
AASHTO	AMERICAN ASSOCIATION OF STATE HIGHWAY TRANSPORTATION OFFICIALS
AB	ANCHOR BOLT AGGREGATE BASE
ACI	AMERICAN CONCRETE INSTITUTE
ADDIT	ADDITIONAL
ADJ	ADJACENT, ADJUSTABLE
AISC	AMERICAN INSTITUTE OF STEEL CONSTRUCTION
AISI	AMERICAN IRON AND STEEL INSTITUTE
AITC	AMERICAN INSTITUTE OF TIMBER CONSTRUCTION
ALUM	ALUMINUM
ALT	ALTERNATE
APA	AMERICAN PLYWOOD ASSOCIATION
APROX	APPROXIMATE
ARCH	ARCHITECTURAL
ASTM	AMERICAN SOCIETY FOR TESTING AND MATERIALS
AWS	AMERICAN WELDING SOCIETY
B/	BOTTOM OF
BLKG	BLOCKING
BLDG	BUILDING
BM	BEAM
BM-1	BEAM MEMBER 1
BN	BOUNDARY NAILING
BOT	BOTTOM
BP	BASE PLATE
BS	BOTH SIDES
BTWN	BETWEEN
C	CHANNEL
CALC'S	CALCULATIONS
CC,C/C	CENTER-TO-CENTER
CJ	CONSTRUCTION JOINT
CJP	COMPLETE JOINT PENETRATION
℄	CENTERLINE
CLR	CLEAR
CNJ	CONTROL JOINT
COL	COLUMN
CONC	CONCRETE
CONST	CONSTRUCTION
CONT	CONTINUOUS
DBL	DOUBLE
DIA	DIAMETER
DIM	DIMENSION
DL	DEAD LOAD
DN	DOWN
DWG(S)	DRAWING(S)
(E)	EXISTING
EA	EACH
EF	EACH FACE
EL	ELEVATION
EMBED	EMBEDMENT
EN	EDGE NAILING
EQ	EQUAL
EQUIP	EQUIPMENT
ES	EACH SIDE
EW	EACH WAY
EXP	EXPANSION
EXT	EXTERIOR
(F)	FUTURE
FD	FLOOR DRAIN
FF	FINISH FLOOR
FIN	FINISH
FLR	FLOOR
FN	FIELD NAILING
FNDN	FOUNDATION
FRP	FIBERGLASS REINFORCED PLASTIC
FT	FOOT, FEET
FTG	FOOTING
GA	GAGE, GAUGE
GALV	GALVANIZED
GLB	GLULAM BEAM
HORIZ	HORIZONTAL
HSS	HOLLOW STRUCTURAL SECTION
HT	HEIGHT
HWL	HIGH WATER LEVEL
IBC	INTERNATIONAL BUILDING CODE
ICC	INTERNATIONAL CODE COUNCIL
IN	INCH
INT	INTERIOR
JT	JOINT
KIP	1,000 POUNDS
KSI	KIPS PER SQUARE INCH
L, ∠	ANGLE
LB(S)	POUND(S)
LB/SF	POUND(S) PER SQUARE FOOT
LL	LIVE LOAD
LLH	LONG LEG HORIZONTAL
LLV	LONG LEG VERTICAL
LLBB	LONG LEG BACK-TO-BACK
LONGIT	LONGITUDINAL
LT	LIGHT
LW	LIGHT WEIGHT
MATL	MATERIAL
MAX	MAXIMUM
MB	MACHINE BOLT
MC	MOISTURE CONTENT
MC	MISCELLANEOUS CHANNEL
MECH	MECHANICAL
MFR	MANUFACTURER
MIN	MINIMUM
MISC	MISCELLANEOUS
MTL	METAL
(N)	NEW
NDT	NON-DESTRUCTIVE TEST(ING)
NIC	NOT IN CONTRACT
NO.	NUMBER
NOM	NOMINAL
NS	NEAR SIDE
NSG	NON-SHRINK GROUT
NTS	NOT TO SCALE
OC	ON CENTERS
OD	OUTSIDE DIAMTER
OH	OPPOSITE HAND, OVERHEAD
OPNG(S)	OPENING(S)
OPP	OPPOSITE
PAF	POWDER ACTUATED FASTENER
PL	PLATE
PLF	POUND PER LINEAL FOOT
PP	PARTIAL PENETRATION
PSF	POUND PER SQUARE FOOT
PSI	POUND PER SQUARE INCH
PT(S)	POINT(S)
PT	PRESSURE TREATED
R, RAD	RADIUS
RECT	RECTANGLE, RECTANGULAR
REINF	REINFORCING, -MENT
REQ'D	REQUIRED
SCH	SCHEDULE
SF	SQUARE FOOT
SHT	SHEET
SIM	SIMILAR
SLBB	SHORT LEGS BACK-TO-BACK
SLH	SHORT LEG HORIZONTAL
SLV	SHORT LEG VERTICAL
SMS	SHEET METAL SCREW
SPEC(S)	SPECIFICATION(S)
SQ	SQUARE
SS	STAINLESS STEEL
SSD	SATURATED SURFACE DRY
STAG	STAGGER
STD	STANDARD
STIFF	STIFFENER
STL	STEEL
STRUC	STRUCTURE, -AL
SUSP	SUSPENDED
SYM	SYMMETRICAL
T/	TOP OF
T&B	TOP AND BOTTOM
TS	STRUCTURAL TUBING
TYP	TYPICAL
UBC	UNIFORM BUILDING CODE
UON	UNLESS OTHERWISE NOTED
UT	ULTRASONIC TESTING
VERT	VERTICAL
VIF	VERIFY IN FIELD
W/	WITH
W/O	WITHOUT
W	WIDE FLANGE
WP	WORK POINT
WT	WEIGHT, STRUCTURAL TEE WALL THICKNESS
WWF	WELDED WIRE FABRIC
YD	YARD

REGISTERED PROFESSIONAL ENGINEER SRIDHAR SADASIVAN No. C 73525 Exp. 12/31/10 CIVIL STATE OF CALIFORNIA 11/17/09

As-Built Drawing No.

REVISIONS			
NUMBER	DATE	INITIALS	DESCRIPTION
1	11/17/09	SS	CONFORMED SET

SCALE: AS SHOWN
DESIGNED BY: SRIDHAR S
DRAWN BY: SRIDHAR S
CHECKED BY: D BARRAZA
FILE NAME: 0687100-S1.dwg

Kennedy/Jenks Consultants
10920 VIA FRONTERA, SUITE 110
SAN DIEGO, CALIFORNIA 92127
K/J 0687100.00

APPROVED BY SRIDHAR SADASIVAN, P.E.
REGISTERED ENGINEER NO. 73525 DATE 11/17/2009

Rancho Water
Rancho California Water District
42135 Winchester Road
Temecula, CA 92590
Phone: (951) 296-6900 Fax: (951) 296-6863

RANCHO CALIFORNIA WATER DISTRICT
APPROVED
Corey Wallace — ENGINEERING MANAGER — *4/29/09* DATE
APPROVALS
Ken Cope 4/29/09 CONTRACTS/DATE | *CE 4/29/09* OPERATIONS/DATE | *TW 4/29/09* MAINTENANCE/DATE

VAIL LAKE PUMP STATION (PROJECT NO. D1317)

STRUCTURAL STANDARD NOTES

SHEET S-1 OF 35 SHEETS

K/J CAD FILE: \\kj\kj-root\KJ-Projects\Irvine\2006_Other\0687100_RCWD_Vail_Lake\Eng_and_Design\CAD\Pumps\95percent_DESIGN\0687100-S1.dwg LAST EDIT DATE: Nov 20, 2009 - 3:31pm

SPLICE LENGTH FOR REINFORCING BARS IN WALLS & SLABS (INCHES)[1,2,3,5]

BAR SIZE		CONC COVER=1.00 IN.		CONC COVER=1.50 IN.		CONC COVER=2.00 IN.	
SOFT METRIC	INCH POUND	TOP[4]	OTHER	TOP[4]	OTHER	TOP[4]	OTHER
#10	#3	17	16	17	16	17	16
#13	#4	23	17	23	17	23	17
#16	#5	33	26	28	22	28	22
#19	#6	46	35	34	26	34	26
#22	#7	74	57	55	43	49	38
#25	#8	93	72	70	54	56	43
#29	#9	113	87	86	66	69	53
#32	#10	137	106	105	81	85	66
#36	#11	162	125	125	97	102	79

NOTES:
1. LAP SPLICE LENGTHS ARE DEPENDENT ON THE FOLLOWING CRITERIA AND ARE IN CONFORMANCE WITH ACI 318-02. NOTIFY THE DESIGN ENGINEER IF THERE ARE ANY DIFFERENCES THAN THE FOLLOWING CRITERIA FOR APPLICABLE CHANGES IN LAP SPLICE LENGTH.
2. LAP SPLICE LENGTHS ARE IN INCHES FOR GRADE 60 REINFORCING IN NORMAL-WEIGHT CONCRETE WITH f'c GREATER THAN OR EQUAL TO 3,000 PSI.
3. CENTER-TO-CENTER SPACING OF REINFORCING SHALL BE GREATER THAN TWICE THE CONCRETE COVER PLUS ONE BAR DIAMETER.
4. TOP BARS ARE HORIZONTAL BARS WITH MORE THAN 12 IN. OF CONCRETE CAST BELOW BARS.
5. FOR EPOXY-COATED REINFORCING OR LIGHTWEIGHT AGGREGATE CONCRETE CONSULT THE DESIGN ENGINEER FOR LAP SPLICE LENGTHS.

CONCRETE REINFORCEMENT SPLICE TABLE
NO SCALE
1 / -

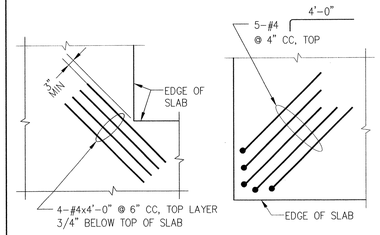

INTERIOR CORNERS EXTERIOR CORNERS

TYPICAL ADDITIONAL REINFORCING FOR SLAB CORNERS
NTS
3 / -

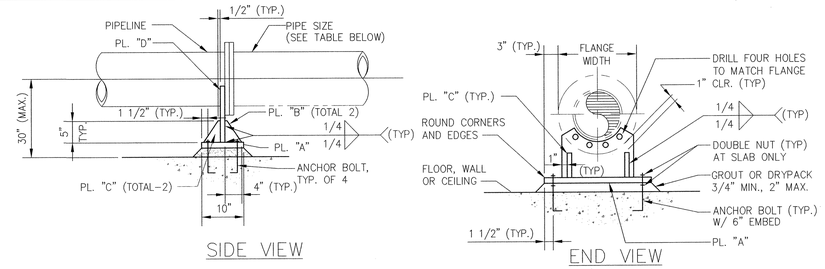

SUPPORT				
PIPE SIZE	MEMBERS			
	PL. "A"	PL. "B"	PL. "C"	PL. "D"
≤ 12"	1/2"	–	–	1/2"
>12" ≤ 16"	1/2"	3/8"	–	1/2"
>16" ≤ 24"	3/4"	3/8"	3/8"	3/4"
>24" ≤ 36"	1"	1/2"	1/2"	1"

SUPPORT		
PIPE SIZE	ANCHOR BOLT	REMARKS
≤ 12"	3/4"	PL. "B" & "C" NOT REQ'D.
>12" ≤ 16"	3/4"	PL. "C" NOT REQ'D.
>16" ≤ 24"	7/8"	–
>24" ≤ 36"	1"	–

PIPE SUPORT
NO SCALE
4 / -

NOT USED
NO SCALE
2 / -

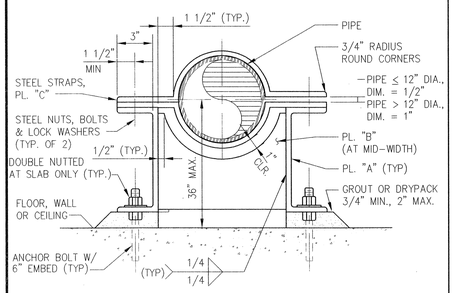

SUPPORT T11S			PIPE SIZE	ANCHOR BOLTS NUMBER & SIZE	STRAP BOLTS
MEMBERS					
PL. "A"	PL. "B"	PL. "C"			
3/8" X 6"	1/4"	3/8" X 6"	<12"	2-5/8"	1"
3/8" X 12"	3/8"	3/8" X 12"	≥12"<20"	4-3/4"	1 3/8"
1" X 12"	3/4"	3/4" X 12"	≥20"≤36"	4-1"	1 5/8"

PIPE SUPPORT
NO SCALE
5 / -

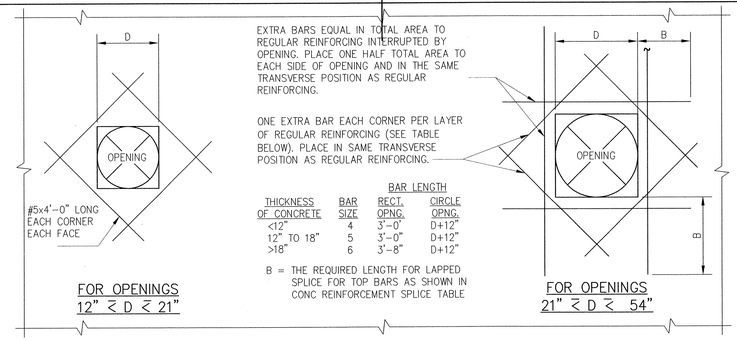

THICKNESS OF CONCRETE	BAR SIZE	BAR LENGTH RECT. OPNG.	BAR LENGTH CIRCLE OPNG.
<12"	4	3'-0"	D+12"
12" TO 18"	5	3'-0"	D+12"
>18"	6	3'-8"	D+12"

B = THE REQUIRED LENGTH FOR LAPPED SPLICE FOR TOP BARS AS SHOWN IN CONC REINFORCEMENT SPLICE TABLE

NOTES:
1. THIS DETAIL IS REQUIRED UNLESS ADDITIONAL REINFORCEMENT SPECIFICALLY INDICATED AT OPENINGS ON DRAWINGS OR IF THE WALL/SLAB IS A PRESSURE WALL. SEE DETAIL BELOW FOR REINFORCING AROUND OPENINGS IN PRESSURE WALLS/SLABS.

TYPICAL ADDITIONAL REINFORCING AT OPENINGS 12" < D ≤ 54"
NO SCALE
8 / -

NOT USED
NO SCALE
9 / -

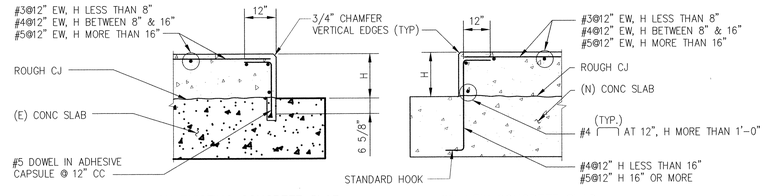

NOTES:
1. PLACE ALL EQUIPMENT ON CONCRETE BASES.
2. SEPARATE ALL STEEL SURFACES BEARING ON CONC BY A GROUT LAYER.
3. FOR INSTALLATION AT EXISTING SLABS, THE CONTRACTOR SHALL LOCATE AND AVOID DRILLING THRU EXISTING REINFORCING STEEL.

TYPICAL EQUIPMENT PAD
NO SCALE
10 / -

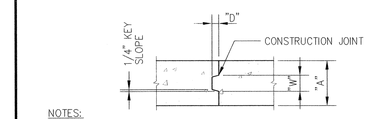

NOTES:
1. KEYS ARE REQUIRED FOR HORIZONTAL CONSTRUCTION JOINTS.
2. FOR SUSPENDED SLABS, PROVIDE A KEY FOR AT LEAST 50% OF THE CONSTRUCTION JOINT LENGTH.

THICKNESS OF SLAB OR WALL "A"	NOMINAL KEY SIZE D x W
LESS THAN 8"	2x3
9" TO 12"	2x4
13" TO 18"	2x6

TYPICAL LONGITUDINAL KEYS
NO SCALE
6 / -

NOT USED
NO SCALE
7 / -

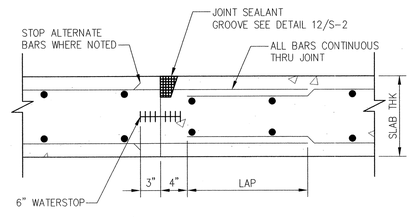

NOTE:
SEE DWG FOR LAP LOCATIONS IF NOT SPECIFIED. PLACE LAP AS SHOWN FOR TOP AND BOTTOM MATS

SLAB CONSTRUCTION JOINT
NO SCALE
11 / -

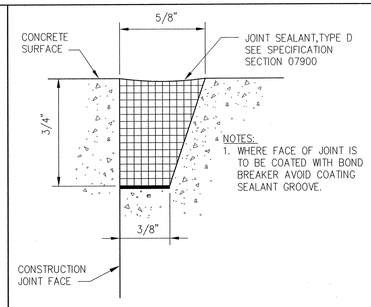

NOTES:
1. WHERE FACE OF JOINT IS TO BE COATED WITH BOND BREAKER AVOID COATING SEALANT GROOVE.

JOINT SEALANT
NO SCALE
12 / -

REGISTERED PROFESSIONAL ENGINEER SRIDHAR SADASIVAN No. C 73525 Exp. 12/31/10 CIVIL STATE OF CALIFORNIA 11/17/09

As-Built Drawing No.

REVISIONS			
NUMBER	DATE	INITIALS	DESCRIPTION
1	11/17/09	SS	CONFORMED SET

SCALE: AS SHOWN
DESIGNED BY: SRIDHAR S
DRAWN BY: SRIDHAR S
CHECKED BY: D BARRAZA
FILE NAME: 0687100-S2.dwg

Kennedy/Jenks Consultants
10920 VIA FRONTERA, SUITE 110
SAN DIEGO, CALIFORNIA 92127
K/J 0687100.00

APPROVED BY SRIDHAR SADASIVAN, P.E.
REGISTERED ENGINEER NO. 73525 DATE 11/17/2009

Rancho Water
Rancho California Water District
42135 Winchester Road
Temecula, CA 92590
Phone: (951) 296-6900 Fax: (951) 296-6863

RANCHO CALIFORNIA WATER DISTRICT
APPROVED
Corey Wallace — ENGINEERING MANAGER — 4/29/09 DATE
APPROVALS

Ken Cope 4/29/09	CE 4/29/09	TW 4/29/09
CONTRACTS/DATE	OPERATIONS/DATE	MAINTENANCE/DATE

VAIL LAKE PUMP STATION (PROJECT NO. D1317)

STRUCTURAL STANDARD DETAILS

SHEET S-2 OF 35 SHEETS

K:/J CAD FILE:\ \\kj\kj-root\kj-Projects\irvine\2006_Other\0687100_RCWD_Vail_Lake\Eng_and_Design\CAD\Pumps\95percent_DESIGN\0687100-S2.dwg LAST EDIT DATE: Nov 20, 2009 - 3:31pm

STRUCTURAL CONCRETE MASONRY UNIT GENERAL NOTES

1. CONCRETE MASONRY UNITS: BLOCKS SHALL HAVE A LIGHTWEIGHT CLASSIFICATION AND CONFORM TO ASTM C90, LATEST EDITION. MINIMUM COMPRESSIVE STRENGTH OF UNITS OF 1,900 PSI WHEN AIR CURED FOR 28-DAYS. MINIMUM COMPRESSIVE STRENGTH OF 1,500 PSI OF MASONRY WALL ASSEMBLAGE AT 28-DAYS.

2. MORTAR: PROPORTION MORTAR TO CONFORM TO THE REQUIREMENTS OF ASTM C270 FOR TYPE S MORTAR. DO NOT USE MASONRY CEMENT. RETEMPER MORTAR ONLY BY ADDING WATER INTO THE MORTAR AND THEN WORKING WATER INTO THE MORTAR. RETEMPERING MORTAR BY DASHING WATER OVER THE MORTAR IS NOT PERMITTED. ANY MORTAR UNUSED WITHIN 2 1/2 HOURS OR GROUT THAT IS UNUSED WITHIN 1 1/2 HOURS AFTER INITIAL MIXING SHALL BE REMOVED FROM THE WORK.

3. GROUT: MINIMUM GROUT STRENGTH OF 2,500 PSI. INCREASE CEMENT CONTENT OF THE GROUT, AS NECESSARY TO ACHIEVE THE SPECIFIED MASONRY ASSEMBLY STRENGTH ($f'm$) AND ADEQUATE WORKABILITY. GROUT COMPRESSIVE STRENGTH WHEN TESTED PER ASTM C1019 SHALL BE EQUAL OR EXCEED THE CONCRETE MASONRY UNIT STRENGTH. GROUT SHALL HAVE A SLUMP BETWEEN 9 AND 10-INCHES AT THE TIME OF PLACEMENT. ALL CELLS SHALL BE FILLED SOLIDLY WITH GROUT. ALL GROUT SHALL BE CONSOLIDATED BY MECHANICAL VIBRATION.

4. ADMIXTURES: ADMIXTURES ARE NOT PERMITTED IN MORTAR OR GROUT UNLESS FAVORABLY REVIEWED BY THE ENGINEER.

5. AGGREGATES: SAND FOR MORTAR SHALL CONFORM TO ASTM C144 EXCEPT NOT LESS THAN 3% OF THE SAND SHALL PASS THE NUMBER 100 SIEVE. SAND AND PEA GRAVEL FOR GROUT SHALL CONFORM TO ASTM C404, TABLE 1, COARSE AGGREGATE, EXCEPT WHEN OTHER GRADINGS ARE SPECIFICALLY APPROVED BY THE ENGINEER.

6. WATER: WATER USED FOR MORTAR AND GROUT SHALL BE CLEAN AND FREE FROM DELETERIOUS AMOUNTS OF ACIDS, SALTS, ALKALI, AND ORGANIC MATERIALS.

7. REINFORCEMENT: REINFORCING SHALL BE ASTM A615-GRADE 60. REINFORCEMENT SHALL BE FULLY EMBEDDED IN GROUT. EMBEDDED ITEMS SHALL BE SECURED IN PLACE PRIOR TO GROUTING. PROVIDE A MINIMUM OF 1-INCH GROUT AROUND BOLTS IN MASONRY. PLACE HORIZONTAL REINFORCING IN BOND BEAM UNITS. VERTICAL REINFORCING SHALL BE HELD IN PLACE AT TOP AND BOTTOM AND AT INTERVALS NOT EXCEEDING 200 BAR DIAMETERS. UTILIZE REBAR POSITIONERS TO ACHIEVE VERTICAL REINFORCING PLACEMENT. HORIZONTAL REINFORCING SHALL BE PLACED IN BOND BEAM UNITS, EXCEPT LINTEL UNITS SHALL BE USED OVER OPENINGS.

8. BEFORE PLACING BLOCK ON CONCRETE, CLEAN CONCRETE, ROUGHEN CONCRETE SO THAT AGGREGATE IS EXPOSED TO 1/4-INCH AMPLITUDE AND APPLY BONDING AGENT.

9. LAY ALL MASONRY WITH COMMON OR RUNNING BOND. CONSTRUCT ALL MASONRY TO MAINTAIN AN UNOBSTRUCTED VERTICAL CONTINUITY OF THE CELLS TO BE FILLED. THE VERTICAL ALIGNMENT SHALL BE SUFFICIENT TO MAINTAIN A CLEAR, UNOBSTRUCTED VERTICAL FLUE IN ACCORDANCE WITH TABLE 7 OF THE SPECIFICATION FOR MASONRY IN ACI 530.

10. CONSTRUCTION JOINTS: WHEN GROUTING IS STOPPED FOR A PERIOD OF 1 HOUR OR LONGER, FORM HORIZONTAL CONSTRUCTION JOINTS BY STOPPING THE GROUT POUR 1 1/2 INCHES MINIMUM BELOW THE UPPER-MOST UNIT, EXCEPT AT THE TOP OF WALLS.

11. CONTROL JOINTS: LOCATE CONTROL JOINTS AS SHOWN ON PLANS OR AT 20'-0" MAXIMUM SPACING WHERE NOT SHOWN BUT NOT LESS THAN 2'-0" FROM A JAMB OR OPENING. PLACE LEDGER, LINTEL, OR TOP OF WALL BEAM REINFORCING CONTINUOUS THROUGH EXPANSION AND CONTROL JOINTS, WRAPPING BARS WITH 1/8-INCH THICK BOND BREAKING TAPE 2'-0" BOTH SIDES OF JOINT. DO NOT SPLICE BOND BEAM REINFORCING WITHIN 6'-0" OF AN EXPANSION OR CONTROL JOINT.

12. SPECIAL INSPECTION: WHERE THE BUILDING, STRUCTURE OR STRUCTURAL ELEMENT REQUIRES SPECIAL INSPECTION AS NOTED ON THE PLANS AND THE REINFORCING SCHEDULE BELOW, PROVIDE SPECIAL INSPECTION IN ACCORDANCE WITH IBC CHAPTER 17.

13. INSPECTION: ALL WORK SHALL BE INSPECTED BY THE OWNER'S REPRESENTATIVE OR THE BUILDING OFFICIAL. THE CONTRACTOR SHALL MAINTAIN ALL WORK ACCESSIBLE AND EXPOSED FOR INSPECTION. INSPECTION SHALL INCLUDE BUT NOT BE LIMITED TO CHECKING CELLS FOR DEBRIS PRIOR TO GROUTING AND SIZE AND PLACEMENT OF REINFORCEMENT, ANCHORS, AND OTHER EMBEDDED ITEMS.

14. REINFORCEMENT TOLERANCES: UNLESS NOTED OTHERWISE ALL VERTICAL WALL REINFORCEMENT PLACED IN A DIRECTION PERPENDICULAR TO THE WALL PLANE SHALL BE PLACED WITHIN A TOLERANCE OF ±1/2 INCH AND ALL LONGITUDINAL REINFORCEMENT SHALL BE PLACED WITHIN A TOLERANCE OF ±2 INCHES.

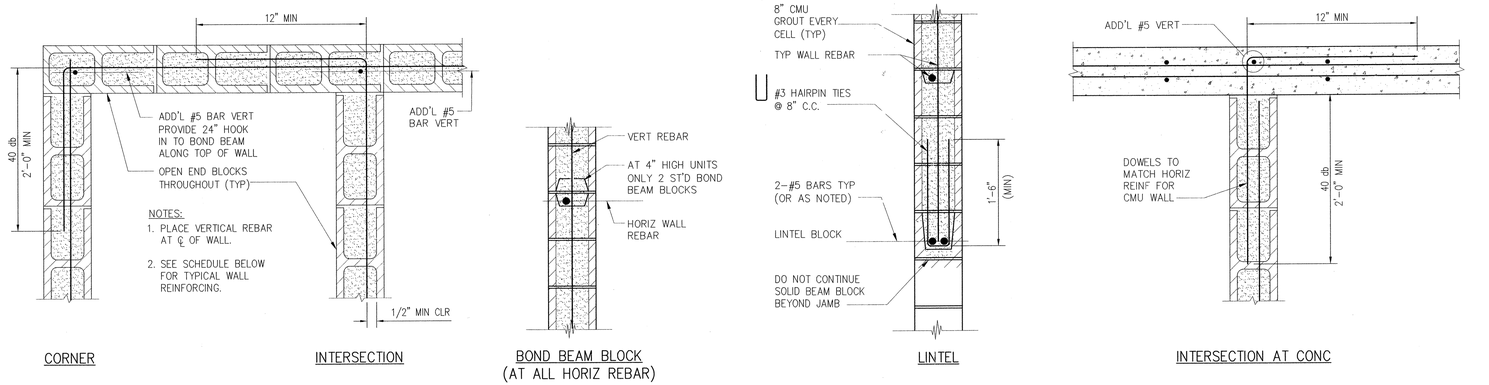

TYPICAL REINFORCEMENT AT CONCRETE MASONRY UNIT WALLS

NTS

1 / -

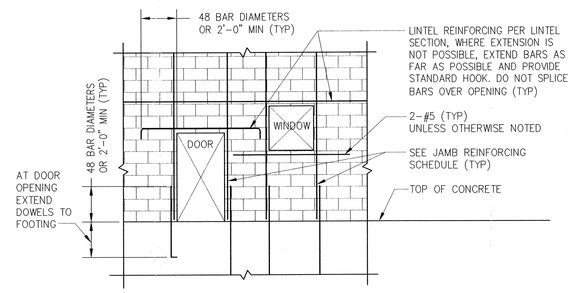

NOTES:

1. FOR WALL REINFORCING, SEE "TYPICAL WALL REINFORCING SCHEDULE" THIS SHEET. SEE RELATED SECTIONS AND DETAILS THIS SHEET.
2. EXTEND JAMB BARS FROM THE FLOOR TO ROOF WHERE OPENING EXCEEDS 4'-0" IN WIDTH; OTHERWISE EXTEND 48 BAR DIAMETERS OR 2'-0" MIN.
3. DOWELS FOR JAMB BARS SHALL MATCH JAMB REINFORCING SCHEDULE.

JAMB REINF SCHEDULE	
OPENING WIDTH	REINFORCEMENT
LESS THAN 5'-0"	2-#6 FOR 8" CMU
5'-0" TO 7'-0"	2-#7

ELEVATION

SCALE: 1/4"=1'-0"

TYPICAL CMU ELEVATION

NTS

6 / -

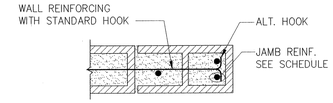

JAMB OR END OF WALL PLAN

NTS

4 / -

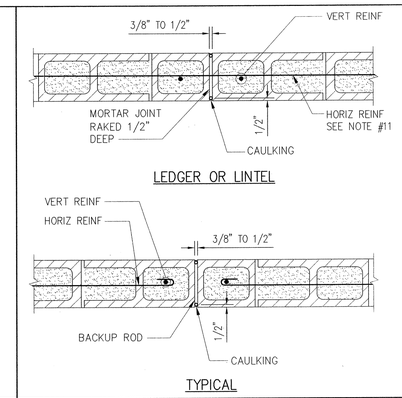

TYPICAL CONTROL JOINT PLAN

NTS

2 / -

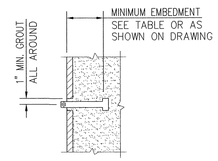

BOLT EMBEDMENT SCHEDULE	
BOLT SIZE	EMBED
1/2"	4"
5/8"	4"
3/4"	5"
7/8"	6"
1"	7"

NOTES:

1. THE MINIMUM BOLT SPACING SHALL BE 12 BOLT DIAMETERS.
2. THE MINIMUM EDGE DISTANCE SHALL BE 6 BOLT DIAMETERS WITH A MINIMUM 6" TO END OF WALL.

TYPICAL BOLT EMBEDMENT

NTS

5 / -

NOT USED

NTS

3 / -

REGISTERED PROFESSIONAL ENGINEER SRIDHAR SADASIVAN No. C 73525 Exp. 12/31/10 CIVIL STATE OF CALIFORNIA 11/17/09

As-Built Drawing No.

REVISIONS			
NUMBER	DATE	INITIALS	DESCRIPTION
1	11/17/09	SS	CONFORMED SET

SCALE: AS SHOWN
DESIGNED BY: SRIDHAR S
DRAWN BY: SRIDHAR S
CHECKED BY: D BARRAZA
FILE NAME: 0687100-S3.dwg

Kennedy/Jenks Consultants
10920 VIA FRONTERA, SUITE 110
SAN DIEGO, CALIFORNIA 92127
K/J 0687100.00

APPROVED BY SRIDHAR SADASIVAN, P.E.
REGISTERED ENGINEER NO. 73525 DATE 11/17/2009

Rancho Water
Rancho California Water District
42135 Winchester Road
Temecula, CA 92590
Phone: (951) 296-6900 Fax: (951) 296-6863

RANCHO CALIFORNIA WATER DISTRICT
APPROVED
Corey Wallace — ENGINEERING MANAGER — 4/29/09 DATE
APPROVALS

Ken Cope 4/29/09	CE 4/29/09	TW 4/29/09
CONTRACTS/DATE	OPERATIONS/DATE	MAINTENANCE/DATE

VAIL LAKE PUMP STATION (PROJECT NO. D1317)

STRUCTURAL REINFORCED CMU NOTES AND STANDARD DETAILS

SHEET S-3 OF 35 SHEETS

K/J CAD FILE: \\kj\kj-root\KJ-Projects\Irvine\2006_Other\0687100_RCWD_Vail_Lake\Eng_and_Design\CAD\Pumps\95percent_DESIGN\0687100-S3.dwg LAST EDIT DATE: Nov 20, 2009 - 3:40pm

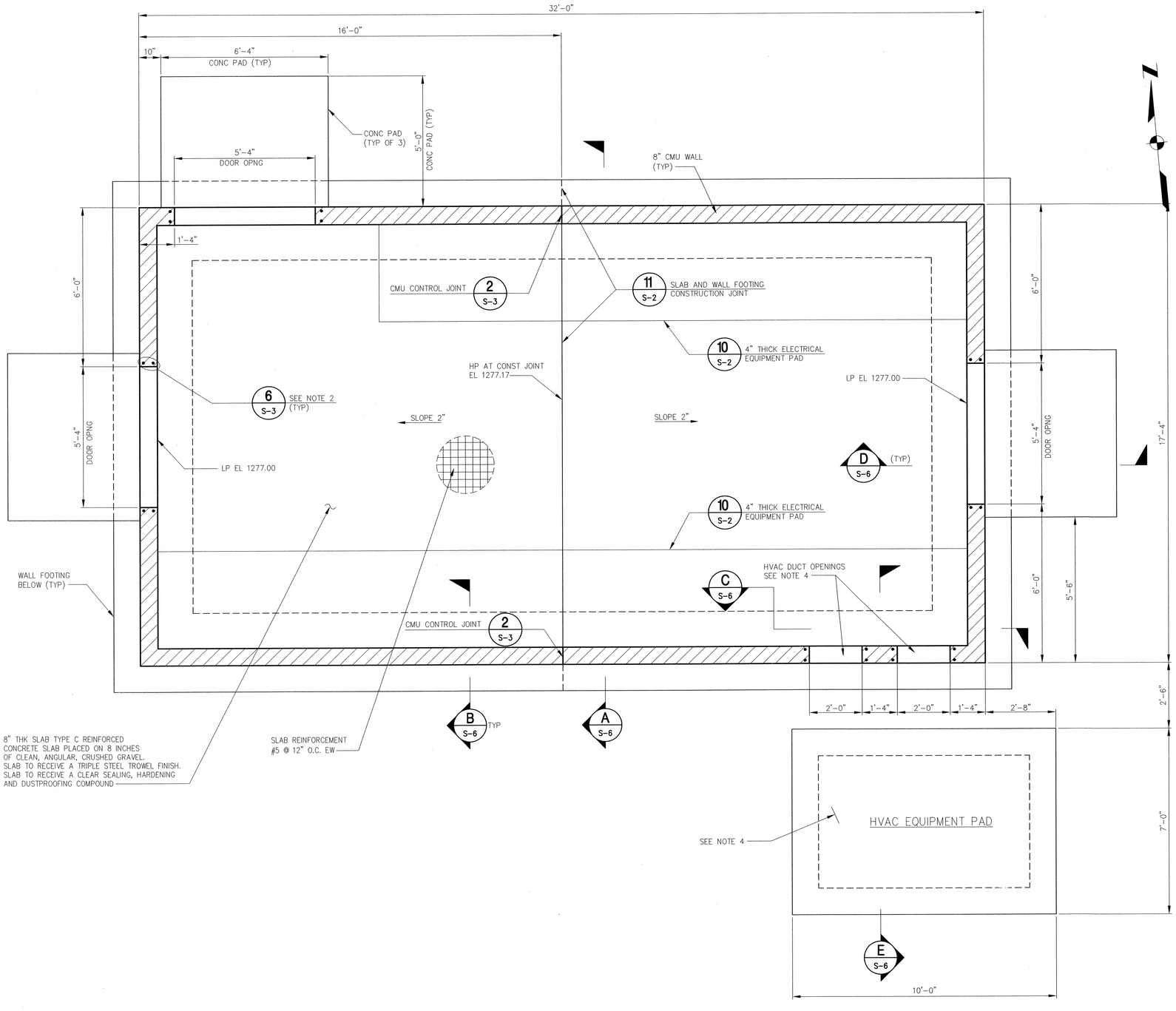

FOUNDATION PLAN 1 / –
SCALE: 1/2" = 1'-0"

NOTES:

1. SEE DRAWINGS S-1 TO S-3 FOR STRUCTURAL GENERAL NOTES AND STANDARD DETAILS
2. PROVIDE ADDITIONAL REINFORCEMENT AROUND OPENINGS PER DETAIL 6/S-3. ALL VERTICAL REINFORCEMENT INCLUDING ADDITIONAL REINFORCEMENT AROUND OPENINGS SHALL HAVE MATCHING DOWELS INTO WALL FOOTING
3. PROVIDE LINTEL BEAMS ABOVE ALL OPENINGS IN CMU WALL PER DETAIL 1/S-3
4. SEE SHEET M-4 FOR HVAC EQUIPMENT AND DUCT DETAILS
5. SEE SHEET C-2 FOR BUILDING CORNER COORDINATES

REGISTERED PROFESSIONAL ENGINEER SRIDHAR SADASIVAN No. C 73525 Exp. 12/31/10 CIVIL STATE OF CALIFORNIA 11/17/09

As-Built Drawing No.

REVISIONS			
NUMBER	DATE	INITIALS	DESCRIPTION
1	11/17/09	SS	CONFORMED SET

SCALE: AS SHOWN
DESIGNED BY: SRIDHAR S
DRAWN BY: SRIDHAR S
CHECKED BY: D BARRAZA
FILE NAME: 0687100-S4.dwg

Kennedy/Jenks Consultants
10920 VIA FRONTERA, SUITE 110
SAN DIEGO, CALIFORNIA 92127
K/J 0687100.00

APPROVED BY SRIDHAR SADASIVAN, P.E.
REGISTERED ENGINEER NO. 73525 DATE 11/17/2009

Rancho Water
Rancho California Water District
42135 Winchester Road
Temecula, CA 92590
Phone: (951) 296-6900 Fax: (951) 296-6863

RANCHO CALIFORNIA WATER DISTRICT
APPROVED
Corey Wallace — ENGINEERING MANAGER — 4/29/09 DATE
APPROVALS

Ken Cope 4/29/09	CE 4/29/09	TW 4/29/09
CONTRACTS/DATE	OPERATIONS/DATE	MAINTENANCE/DATE

VAIL LAKE PUMP STATION (PROJECT NO. D1317)

ELECTRICAL BUILDING FOUNDATION PLAN

SHEET S-4 OF 35 SHEETS

K/J CAD FILE: \\VAIL\K-root\K-Projects\Irvine\2006_Other\0687100_RCWD_Vail_Lake\Eng_and_Design\CAD\Pumps\95percent_DESIGN\0687100-S4.dwg LAST EDIT DATE: Nov 20, 2009 – 3:49pm

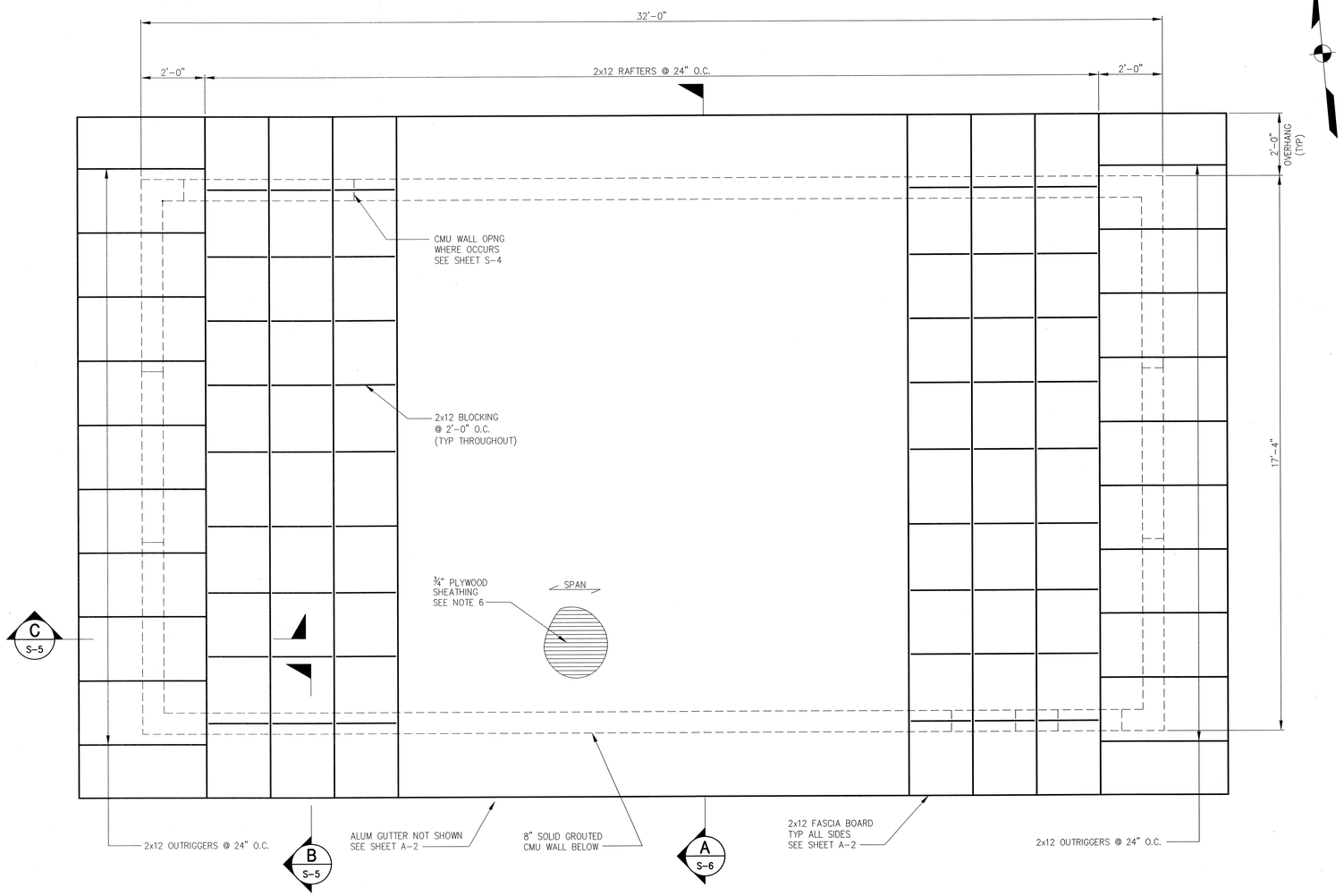

ROOF FRAMING PLAN (1 / -)
SCALE: 1/2" = 1'-0"

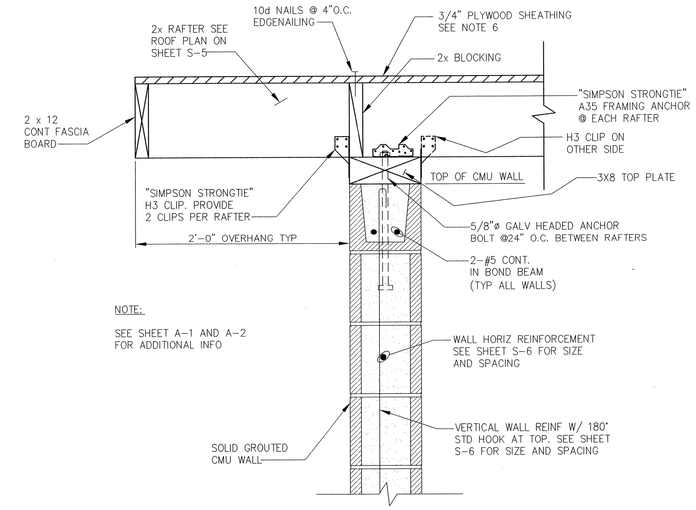

SECTION (B / S-5)
SCALE: 1 1/2" = 1'-0"

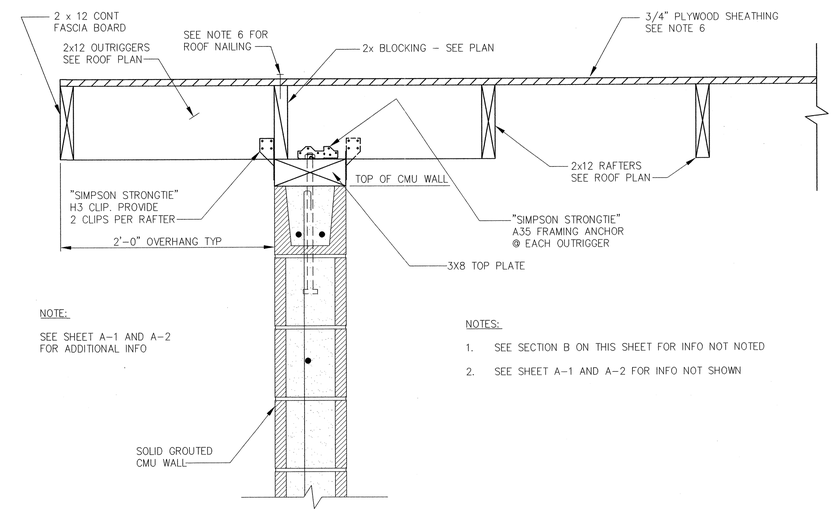

NOTES:

1. SEE SECTION B ON THIS SHEET FOR INFO NOT NOTED
2. SEE SHEET A-1 AND A-2 FOR INFO NOT SHOWN

SECTION (C / S-5)
SCALE: 1 1/2" = 1'-0"

NOTES:

1. SEE SHEET S-1 AND SPECIFICATION SECTION 06100 FOR GENERAL WOOD FRAMING NOTES AND ADDITIONAL REQUIREMENTS
2. USE SIMPSON STRONG-TIE CONNECTORS OR APPROVED EQUAL.
3. BLOCKING SHALL BE ATTACHED TO TOP PLATE WITH "SIMPSON STRONG-TIE" H1 CLIP AT 24" ON CENTER (TYPICAL) UNLESS NOTED OTHERWISE.
4. BLOCKING SHALL BE ATTACHED TO ROOF BEAMS WITH "SIMPSON STRONG-TIE" A35 - TYPICAL ALL LOCATIONS.
5. ATTACH TOP PLATE TO CMU WITH 5/8"ø GALV HEADED ANCHOR BOLT W/ 12" MINIMUM EMBEDMENT IN CMU AND SPACED AT 24" ON CENTER (MAXIMUM). ANCHOR BOLTS SHALL BE CAST IN PLACE.
6. ROOF SHEATHING:

PROVIDE 3/4" APA RATED 48/24 SHEATHING; EXPOSURE 1. SEE SPECIFICATION SECTION 06100 FOR PLYWOOD SHEATHING SPECIES AND GRADE.

PLYWOOD SHEATHING SHALL BE BLOCKED ON ALL EDGES AND SHALL HAVE BLOCKING AT 24" ON CENTER.

PROVIDE 10d NAILS @ 4" O.C. AT ALL SUPPORTED EDGES AND BOUNDARIES AND AT 6" O.C. AT INTERMEDIATE SUPPORTS W/ MINIMUM 1 3/4" PENETRATION AT ALL LOCATIONS.

STAGGER PLYWOOD SHEETS AND INSTALL SHEETS WITH FACE GRAIN PERPENDICULAR TO SUPPORTS.

REGISTERED PROFESSIONAL ENGINEER SRIDHAR SADASIVAN No. C 73525 Exp. 12/31/10 CIVIL STATE OF CALIFORNIA 11/17/09

As-Built Drawing No.

REVISIONS			
NUMBER	DATE	INITIALS	DESCRIPTION
1	11/17/09	SS	CONFORMED SET

SCALE: AS SHOWN
DESIGNED BY: SRIDHAR S
DRAWN BY: SRIDHAR S
CHECKED BY: D BARRAZA
FILE NAME: 0687100-S5.dwg

Kennedy/Jenks Consultants
10920 VIA FRONTERA, SUITE 110
SAN DIEGO, CALIFORNIA 92127
K/J 0687100.00

APPROVED BY SRIDHAR SADASIVAN, P.E.
REGISTERED ENGINEER NO. 73525 DATE 11/17/2009

Rancho Water
Rancho California Water District
42135 Winchester Road
Temecula, CA 92590
Phone: (951) 296-6900 Fax: (951) 296-6863

RANCHO CALIFORNIA WATER DISTRICT
APPROVED
Corey Wallace — ENGINEERING MANAGER — 4/29/09 DATE
APPROVALS

Ken Cope 4/29/09	CE 4/29/09	TW 4/29/09
CONTRACTS/DATE	OPERATIONS/DATE	MAINTENANCE/DATE

VAIL LAKE PUMP STATION (PROJECT NO. D1317)

ELECTRICAL BUILDING ROOF PLAN AND ROOF DETAILS

SHEET S-5 OF 35 SHEETS

K:\CAD FILES\VAL\X-root\X-Projects\Water\2006_Other\0687100_RCWD_Vail_Lake_Eng_and_Design\CAD\Pumps\95percent_DESIGN\0687100-S5.dwg LAST EDIT DATE: Nov 20, 2009 - 3:50pm

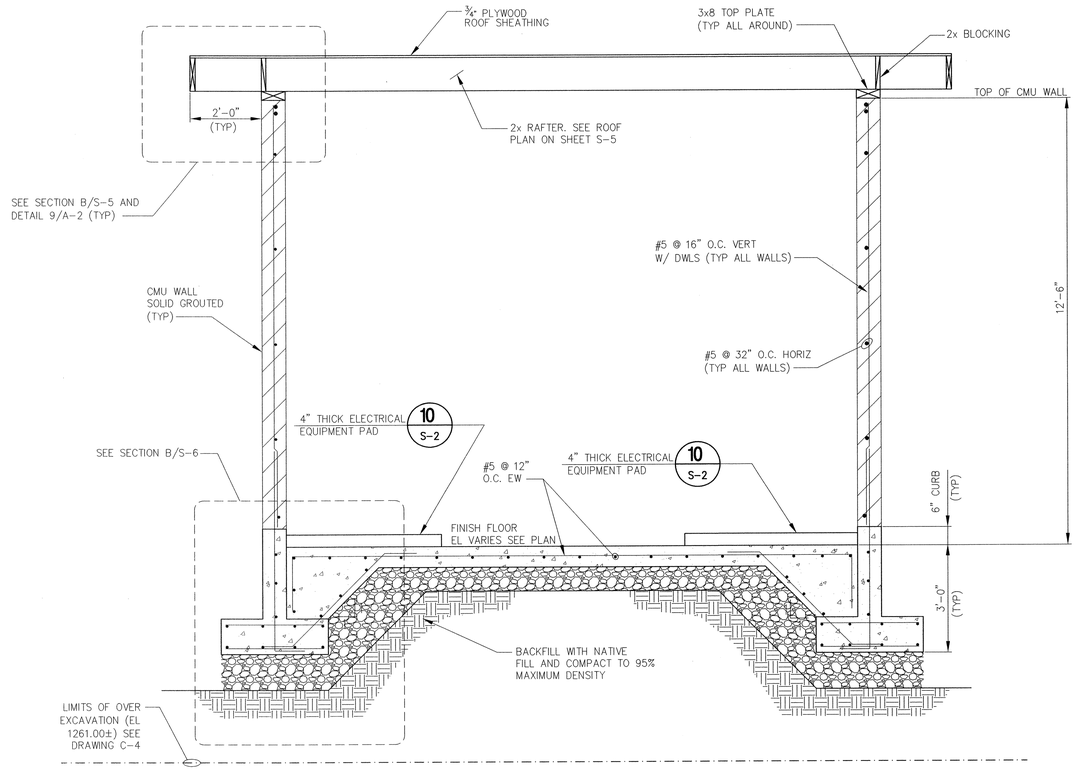

SECTION A (S-4) S-5
SCALE: 1/2" = 1'-0"

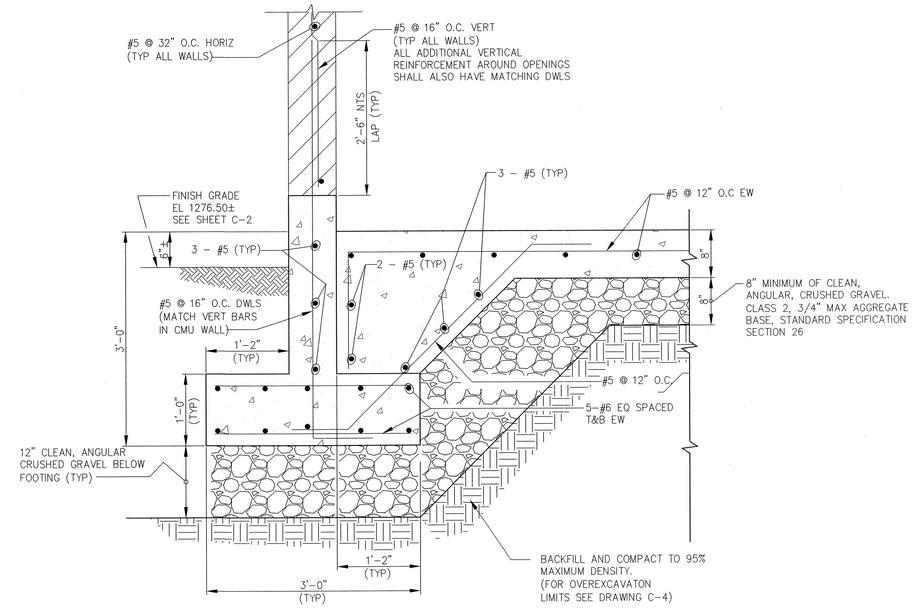

SECTION B (S-4)
SCALE: 1" = 1'-0"

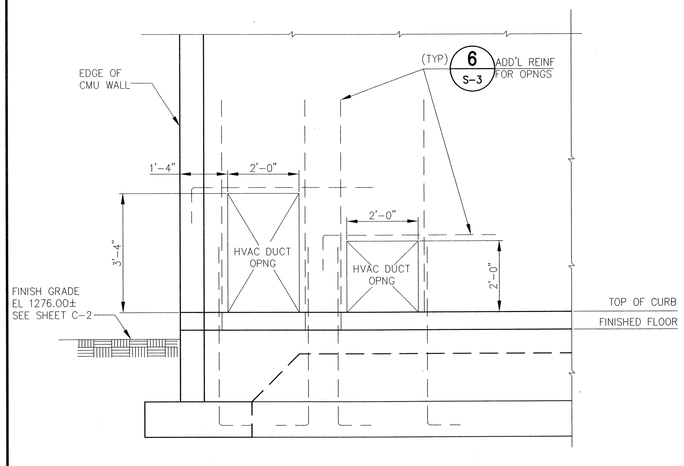

SECTION C (S-4)
SCALE: 1/2" = 1'-0"

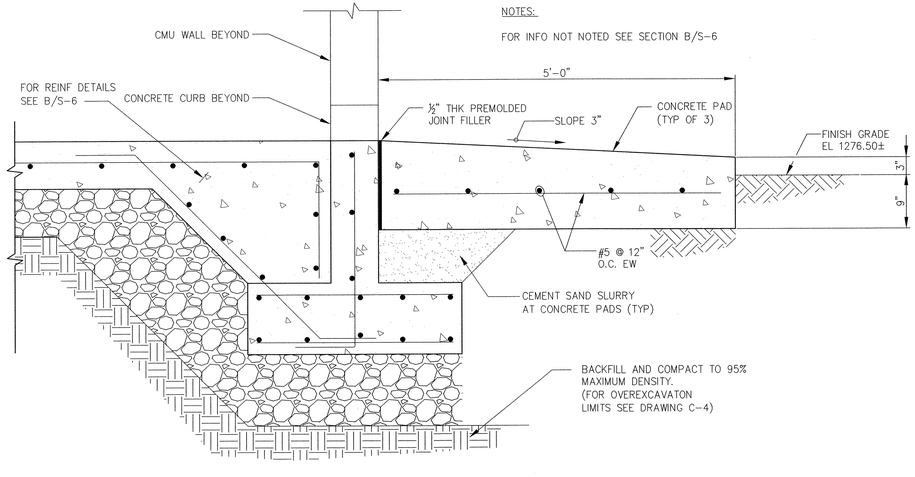

SECTION D (S-4)
SCALE: 1" = 1'-0"

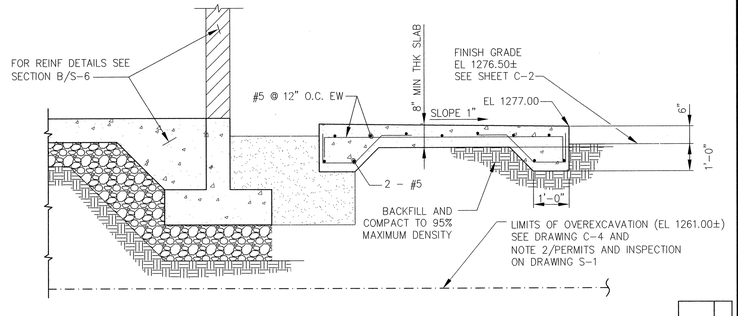

SECTION E (S-4)
SCALE: 1/2" = 1'-0"

REGISTERED PROFESSIONAL ENGINEER SRIDHAR SADASIVAN No. C 73525 Exp. 12/31/10 CIVIL STATE OF CALIFORNIA 11/17/09

As-Built Drawing No.

REVISIONS			
NUMBER	DATE	INITIALS	DESCRIPTION
1	11/17/09	SS	CONFORMED SET

SCALE: AS SHOWN
DESIGNED BY: SRIDHAR S
DRAWN BY: SRIDHAR S
CHECKED BY: D BARRAZA
FILE NAME: 0687100-S6.dwg

Kennedy/Jenks Consultants
10920 VIA FRONTERA, SUITE 110
SAN DIEGO, CALIFORNIA 92127
K/J 0687100.00

APPROVED BY SRIDHAR SADASIVAN, P.E.
REGISTERED ENGINEER NO. 73525 DATE 11/17/2009

Rancho Water
Rancho California Water District
42135 Winchester Road
Temecula, CA 92590
Phone: (951) 296-6900 Fax: (951) 296-6863

RANCHO CALIFORNIA WATER DISTRICT
APPROVED
Corey Wallace — ENGINEERING MANAGER — 4/29/09 DATE
APPROVALS

Ken Cope 4/29/09	CE 4/29/09	TW 4/29/09
CONTRACTS/DATE	OPERATIONS/DATE	MAINTENANCE/DATE

VAIL LAKE PUMP STATION (PROJECT NO. D1317)

ELECTRICAL BUILDING SECTIONS

SHEET S-6 OF 35 SHEETS

K:/CAD FILES\ \\WIN-root\K:-Projects\Irvine\2006_Other\0687100_RCWD_Vail_Lake\Eng_and_Design\CAD\Pumps\95percent_DESIGN\0687100-S6.dwg LAST EDIT DATE: Nov 20, 2009 - 3:50pm

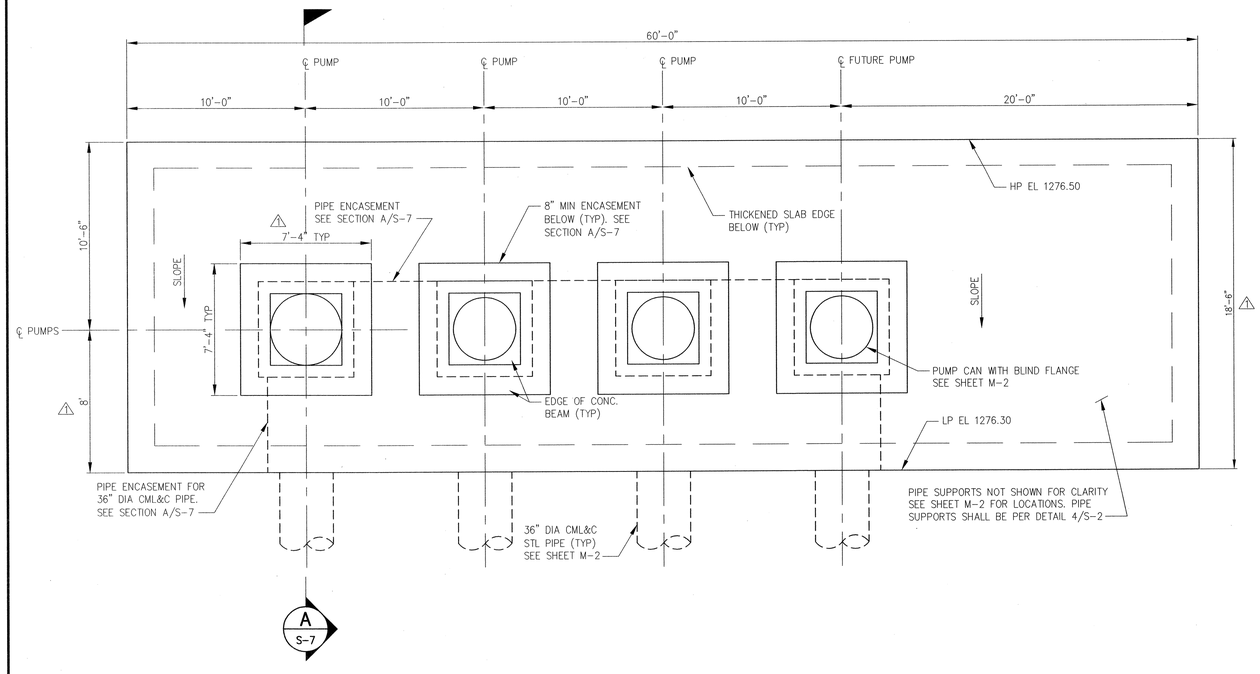

PUMP STATION PLAN (1)
SCALE: 1/4" = 1'-0"

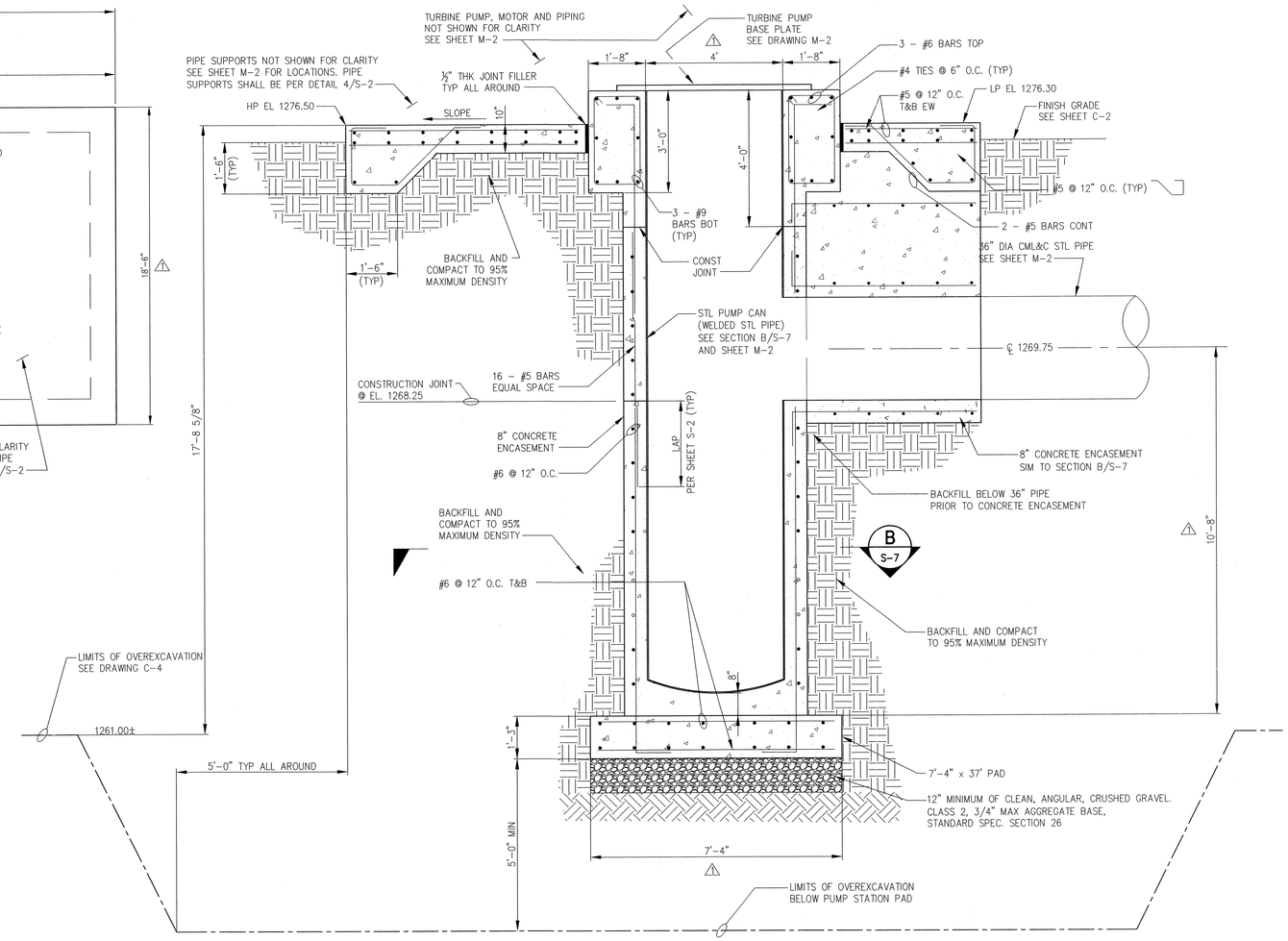

SECTION (A / S-7)
SCALE: 1/2" = 1'-0"

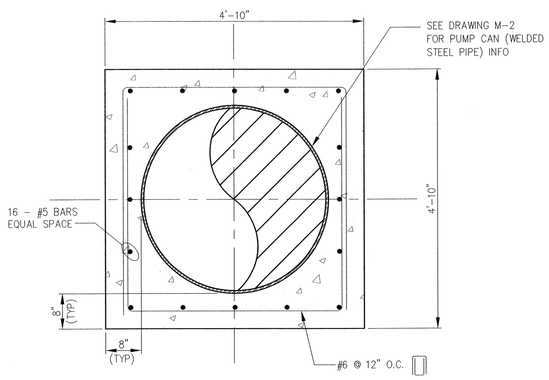

SECTION (B / S-7)
SCALE: 1/2" = 1'-0"

As-Built Drawing No.

REGISTERED PROFESSIONAL ENGINEER SRIDHAR SADASIVAN No. C 73525 Exp. 12/31/10 CIVIL STATE OF CALIFORNIA 11/17/09

REVISIONS			
NUMBER	DATE	INITIALS	DESCRIPTION
1	10/30/09	NBM	ADDENDUM NO. 3
2	11/17/09	SS	CONFORMED SET

SCALE: AS SHOWN
DESIGNED BY: SRIDHAR S
DRAWN BY: SRIDHAR S
CHECKED BY: D BARRAZA
FILE NAME: 0687100-S7.dwg

Kennedy/Jenks Consultants
10920 VIA FRONTERA, SUITE 110
SAN DIEGO, CALIFORNIA 92127
K/J 0687100.00

APPROVED BY SRIDHAR SADASIVAN, P.E.
REGISTERED ENGINEER NO. 73525 DATE 11/17/2009

Rancho Water
Rancho California Water District
42135 Winchester Road
Temecula, CA 92590
Phone: (951) 296-6900 Fax: (951) 296-6863

RANCHO CALIFORNIA WATER DISTRICT
APPROVED
Corey Wallace — ENGINEERING MANAGER — 4/29/09 DATE
APPROVALS

Ken Cope 4/29/09	CE 4/29/09	TW 4/29/09
CONTRACTS/DATE	OPERATIONS/DATE	MAINTENANCE/DATE

VAIL LAKE PUMP STATION (PROJECT NO. D1317)

PUMP STATION PLAN AND SECTIONS

SHEET S-7 OF 35 SHEETS

K:/ CAD FILE: \\k:\k-root\Xs-Projects\Irvine\2006_Other\0687100_RCWD_Vail_Lake\Eng_and_Design\CAD\Pumps\95percent_DESIGN\0687100-S7.dwg LAST EDIT DATE: Nov 20, 2009 - 3:52pm

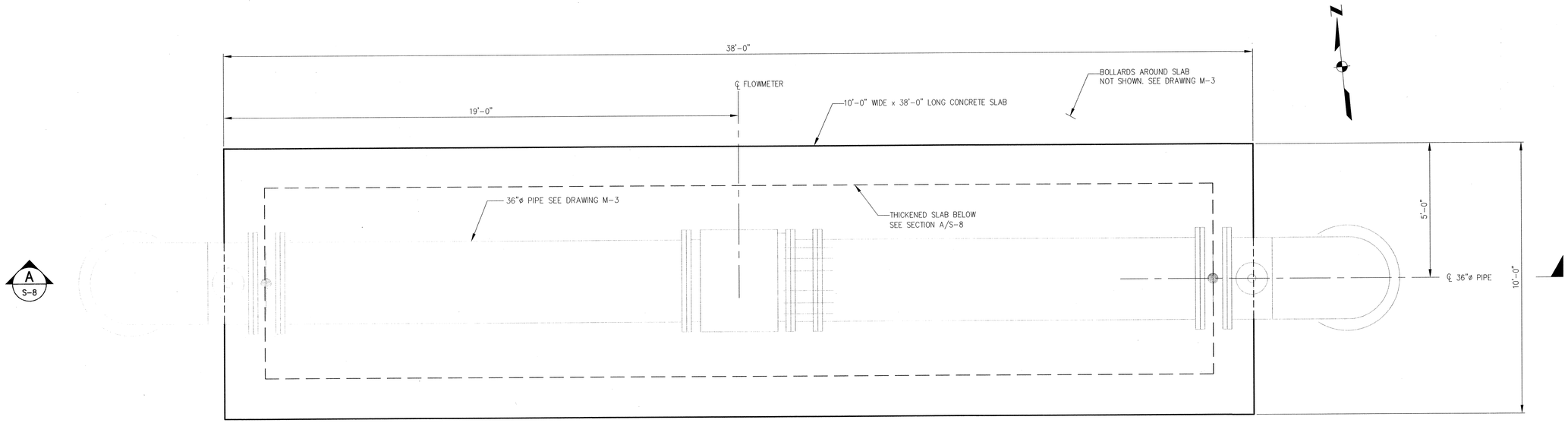

FLOWMETER PAD PLAN (1)
SCALE: 1/2" = 1'-0"

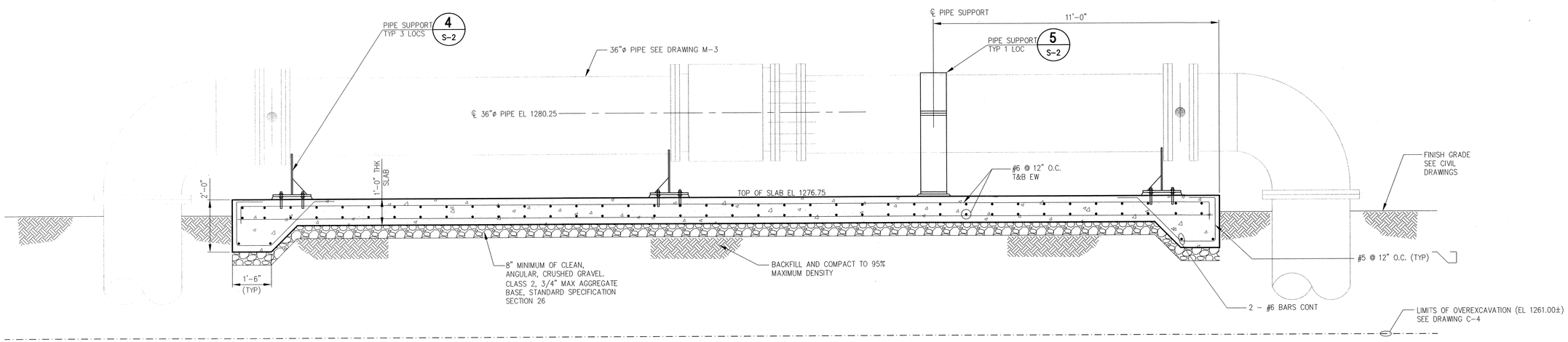

SECTION (A / S-8)
SCALE: 1/2" = 1'-0"

REGISTERED PROFESSIONAL ENGINEER
SRIDHAR SADASIVAN
No. C 73525
Exp. 12/31/10
CIVIL
STATE OF CALIFORNIA
11/17/09

As-Built Drawing No.

REVISIONS			
NUMBER	DATE	INITIALS	DESCRIPTION
1	11/17/09	SS	CONFORMED SET

SCALE: AS SHOWN
DESIGNED BY: SRIDHAR S
DRAWN BY: SRIDHAR S
CHECKED BY: D BARRAZA
FILE NAME: 0687100-S8.dwg

Kennedy/Jenks Consultants
10920 VIA FRONTERA, SUITE 110
SAN DIEGO, CALIFORNIA 92127
K/J 0687100.00

APPROVED BY SRIDHAR SADASIVAN, P.E.
REGISTERED ENGINEER NO. 73525 DATE 11/17/2009

Rancho Water
Rancho California Water District
42135 Winchester Road
Temecula, CA 92590
Phone: (951) 296-6900 Fax: (951) 296-6863

RANCHO CALIFORNIA WATER DISTRICT
APPROVED
Corey Wallace — ENGINEERING MANAGER — 4/29/09 DATE
APPROVALS

Ken Cope 4/29/09	CE 4/29/09	TW 4/29/09
CONTRACTS/DATE	OPERATIONS/DATE	MAINTENANCE/DATE

VAIL LAKE PUMP STATION
(PROJECT NO. D1317)

FLOWMETER PAD PLAN AND SECTION

SHEET
S-8
OF 35 SHEETS

K/J CAD FILE: \\WJH-root\KJ-Projects\Irvine\2006_Other\0687100_RCWD_Vail_Lake\Eng_and_Design\CAD\Pumps\95percent_DESIGN\0687100-S8.dwg LAST EDIT DATE: Nov 20, 2009 - 3:51pm

ABBREVIATIONS

a	CIRCUIT BREAKER AUX. CONTACT, CLOSED WHEN BREAKER IS CLOSED
A	AMMETER, AMPERES
AC	ALTERNATING CURRENT
A/D	ANALOG TO DIGITAL
ADJ	ADJUSTABLE
AF	AMPERE FRAME
AFD	ADJUSTABLE FREQUENCY DRIVE
AFF	ABOVE FINISHED FLOOR
AIC	AMPERES INTERRUPTING CAPACITY
AL	ALUMINUM
ALT	ALTERNATOR
A/M	AUTO/MANUAL CONTROLLER
ANN	ANNUNCIATOR
APPROX	APPROXIMATE
AS	AMMETER SWITCH
AT	AMMETER TRIP
ATS	AUTOMATIC TRANSFER SWITCH
AUTO	AUTOMATIC
AUX	AUXILIARY
AWG	AMERICAN WIRE GAGE
b	CIRCUIT BREAKER AUX. CONTACT, CLOSED WHEN BREAKER IS OPEN
BCG	BARE COPPER GROUND
BLDG	BUILDING
C	CONDUIT, CONTACTOR
CAB	CABINET
CAP	CAPACITOR
CB	CIRCUIT BREAKER
CC	CONTROL CABLE, CLOSING COIL
CHH	COMMUNICATION HANDHOLE
CKT	CIRCUIT
CMH	COMMUNICATION MANHOLE
CO	CONDUIT ONLY
COMM	COMMUNICATION
COND	CONDUCTOR
CONT	CONTINUED, CONTINUATION
CPT	CONTROL POWER TRANSFORMER
CP	CONTROL PANEL
CR	CONTROL RELAY
CS	CONTROL SWITCH
CT	CURRENT TRANSFORMER
CWP	COLD WATER PIPE
DC	DIRECT CURRENT
DIA	DIAMETER
DIAG	DIAGRAM
DISC	DISCONNECT
DISTR	DISTRIBUTION
DN	DOWN
DP	DISTRIBUTION PANEL
DPDT	DOUBLE POLE DOUBLE THROW
DPST	DOUBLE POLE SINGLE THROW
DWG	DRAWING
(E)	EXISTING
EA	EACH
EF	EXHAUST FAN
EHH	ELECTRICAL HANDHOLE
EL, ELEV	ELEVATION
ELEC	ELECTRIC, ELECTRICAL
ELEM	ELEMENTARY
EMERG	EMERGENCY
ENCL	ENCLOSURE
EQ	EQUAL
EQPT	EQUIPMENT
ETM	ELAPSED TIME METER
FDR	FEEDER
FLEX	FLEXIBLE
FLUOR	FLUORESCENT
FREQ	FREQUENCY
FT	FEET, FOOT
FU	FUSE
(F)	FUTURE
FVNR	FULL VOLTAGE NON REVERSING
FVR	FULL VOLTAGE REVERSING
FWD	FORWARD
GA	GAUGE
GALV	GALVANIZED
GEN	GENERATOR
GFI	GROUND FAULT INTERRUPTER
G, GND	GROUND
GRS	GALVANIZED RIGID STEEL
H_2O_2	HYDROGEN PEROXIDE
HH	HANDHOLE
HMI	HUMAN MACHINE INTERFACE
HOA	HAND–OFF–AUTOMATIC
HOR	HAND–OFF–REMOTE
HORIZ	HORIZONTAL
HP	HORSEPOWER
HPS	HIGH PRESSURE SODIUM
HTR	HEATER
HV	HIGH VOLTAGE
HZ	HERTZ (CYCLES PER SECOND)
IND LT	INDICATING LIGHT
INCAND	INCANDESCENT
INSTR	INSTRUMENT, INSTRUMENTATION
I/O	INPUT/OUTPUT
JB	JUNCTION BOX
KA	KILOAMPERES
KCMIL	THOUSANDS OF CIRCULAR MILS
KV	KILOVOLTS
KVA	KILOVOLT AMPERES
KVAR	KILOVOLT AMPERES REACTIVE
KVARH	KILOVOLT AMPERES REACTIVE HOURS
KW	KILOWATTS
KWH	KILOWATT HOURS
LP	LIGHTING PANEL
LPS	LOW PRESSURE SODIUM
LTG	LIGHTING
LTS	LIGHTS
(M)	MODIFIED
mA	MILLIAMPERES
MAX	MAXIMUM
MCC	MOTOR CONTROL CENTER
MCP	MOTOR CIRCUIT PROTECTOR
MFR	MANUFACTURER
MH	MANHOLE
MIN	MINIMUM
MISC	MISCELLANEOUS
MOV	MOTOR OPERATED VALVE
MPU	MOTOR PROTECTION UNIT
MS	MOTOR STARTER
MTD	MOUNTED
MTG	MOUNTING
MTS	MANUAL TRANSFER SWITCH
(N)	NEW
NC	NORMALLY CLOSED
NEC	NATIONAL ELECTRICAL CODE
NEMA	NATIONAL ELECTRICAL MANUFACTURER'S ASSOC.
NEUT	NEUTRAL
NIC	NOT IN CONTRACT
NO	NORMALLY OPEN, NUMBER
NTS	NOT TO SCALE
OH	OVERHEAD
OIT	OPERATOR INTERFACE TERMINAL
OL	THERMAL OVERLOAD RELAY
OT	OVER TEMPERATURE
PB	PULLBOX
PE	PHOTOELECTRIC
PEC	PHOTOELECTRIC CELL
PF	POWER FACTOR
pH	MEASURE OF ACIDITY OR ALKALINITY
PH	PHASE
PLC	PROGRAMMABLE LOGIC CONTROLLER
PNL	PANEL
PNLBD	PANELBOARD
PRI	PRIMARY
PS	PRESSURE SWITCH
PSI	POUNDS PER SQUARE INCH
PVC	POLYVINYL CHLORIDE
PWR	POWER
(RL)	RELOCATE
(RLD)	RELOCATED
RCPT	RECEPTACLE
RCT	REPEAT CYCLE TIMER
REQD	REQUIRED
RM	ROOM
RPM	REVOLUTIONS PER MINUTE
RT	RESET TIMER
SCR	SILICON CONTROLLED RECTIFIER
SD	SMOKE DETECTOR
SEC	SECONDS, SECONDARY
SECT	SECTION
SF	SUPPLY FAN
SHH	SIGNAL HANDHOLE
SHT	SHEET
SIG	SIGNAL
SN	SOLID NEUTRAL
SPECS	SPECIFICATIONS
SPDT	SINGLE POLE DOUBLE THROW
SS	STAINLESS STEEL
SW	SWITCH
SWBD	SWITCHBOARD
SWGR	SWITCHGEAR
SYNC	SYNCHRONIZING
TB	TERMINAL BOX, TERMINAL BOARD
TC	TELEPHONE CABINET
TEL	TELEPHONE
TEMP	TEMPERATURE
TSP	TWISTED SHIELDED PAIR
TYP	TYPICAL
UG	UNDERGROUND
UH	UNIT HEATER
V	VOLTS
VA	VOLT–AMPERES
VFD	VARIABLE FREQUENCY DRIVE
VAR	VOLT AMPERES REACTIVE
VERT	VERTICAL
VH	VAR–HOUR
VS	VOLTMETER SWITCH
W	WIRE, WATTS
WHM	WATTHOUR METER
WHDM	WATTHOUR DEMAND METER
WP	WEATHERPROOF
WT	WATERTIGHT
WTP	WATER TREATMENT PLANT
XFMR	TRANSFORMER

GENERAL NOTES:

G1. THESE DRAWINGS ARE DIAGRAMMATIC ONLY. EXACT LOCATIONS OF ELECTRICAL EQUIPMENT SHALL BE DETERMINED IN THE FIELD BY THE ENGINEER. THE INSTALLATION OF ALL EQUIPMENT SHOWN ON THESE DRAWINGS OR DESCRIBED IN THE SPECIFICATIONS SHALL CONFORM TO THE REQUIREMENTS SET FORTH IN THE LATEST EDITIONS OF ALL APPLICABLE CODES AND UTILITY COMPANY STANDARDS. CONTACT THE UTILITY COMPANY REPRESENTATIVES AND VERIFY THEIR REQUIREMENTS.

G2. THIS IS A GENERALIZED LEGEND SHEET. THIS CONTRACT MAY NOT USE ALL INFORMATION SHOWN.

G3. NOTIFY THE ENGINEER IMMEDIATELY IF CONFLICTS IN EQUIPMENT LOCATIONS ARE DISCOVERED OR IF PROBLEMS ARISE DUE TO FIELD CONDITIONS, LACK OF INFORMATION OR ANY OTHER REASON. NO PAYMENT WILL BE MADE FOR CHANGES WHICH HAVE NOT BEEN FAVORABLY REVIEWED BY THE ENGINEER.

G4. INFORMATION SHOWN MAY NOT BE ALL INCLUSIVE. SEE ALSO ANSI C37.2, Y1.1, Y32.2, AND Y32.9.

G5. VERIFY ALL COLOR REQUIREMENTS BEFORE ORDERING MATERIALS.

G6. REFER TO THE MECHANICAL DRAWINGS FOR CERTAIN CONTROL DIAGRAMS AND EXACT LOCATIONS OF MECHANICAL EQUIPMENT AND FOR CERTAIN CONNECTIONS TO BE MADE TO ELECTRICAL CIRCUITS.

PLAN NOTES:

P1. CONDUIT SIZE AND FILL SHALL BE AS INDICATED. WHERE NO SIZE IS SHOWN, THE CONDUIT SHALL BE SIZED IN ACCORDANCE WITH THE EDITION OF THE NATIONAL ELECTRICAL CODE ADOPTED BY THE AUTHORITY HAVING CODE ENFORCEMENT JURISDICTION. WHERE NO FILL IS INDICATED, THE FILL SHALL BE 2#12. PROVIDE 3/16 INCH NYLON PULL ROPE IN EACH EMPTY CONDUIT.

P2. CONDUIT AND WIRE LAYOUT FOR LIGHTING AND RECEPTACLES NOT SHOWN. PROVIDE PER NEC.

P3. LOWER CASE LETTERS ADJACENT TO A SWITCH OR LIGHT FIXTURE INDICATE A SWITCHED CIRCUIT. FOR FOUR LAMP FLUORESCENT FIXTURES WIRED IN PAIRS WITHIN EACH FIXTURE, THE "a" SWITCH CONTROLS THE OUTER LAMPS AND THE "b" SWITCH CONTROLS THE INNER LAMPS; WIRE 3 LAMP FIXTURES SIMILARLY.

P4. NUMBER OF CIRCLES DOES NOT REPRESENT THE NUMBER OF CONDUITS IN THE ENCASEMENT.

PLAN SYMBOLS

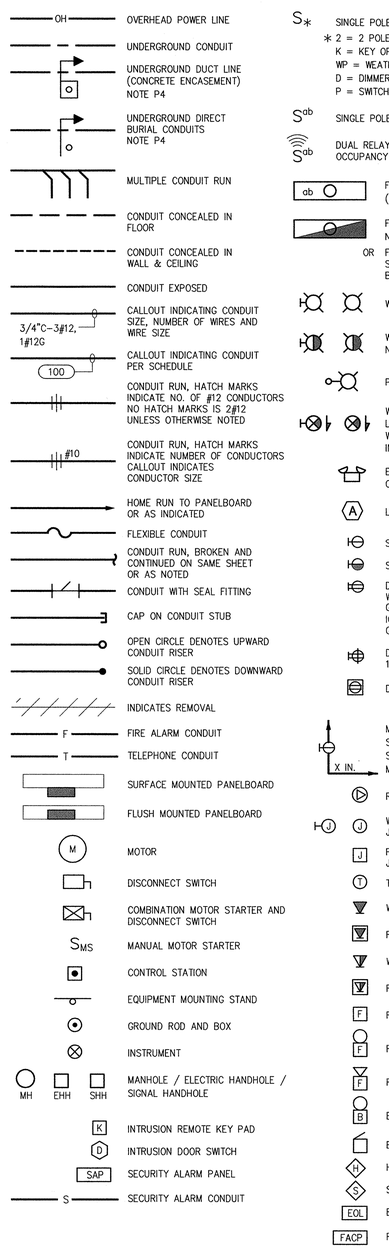

SINGLE LINE SYMBOLS

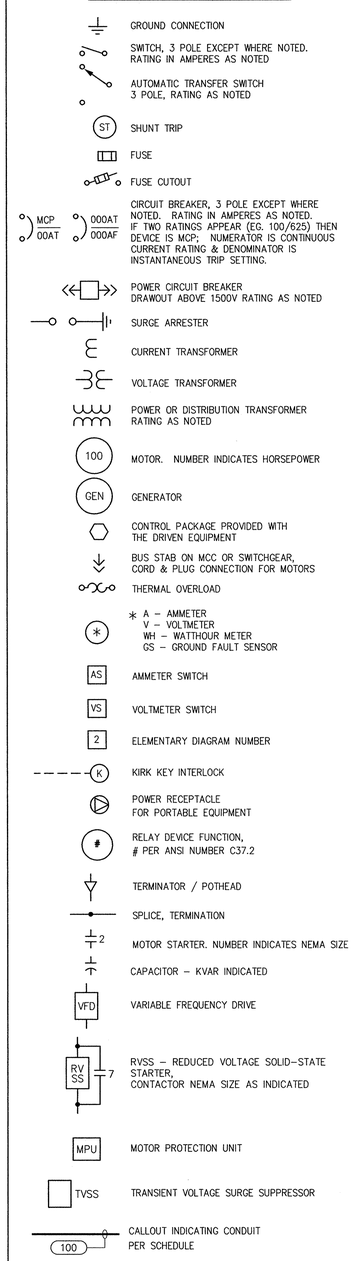

ELEMENTARY DIAGRAM SYMBOLS

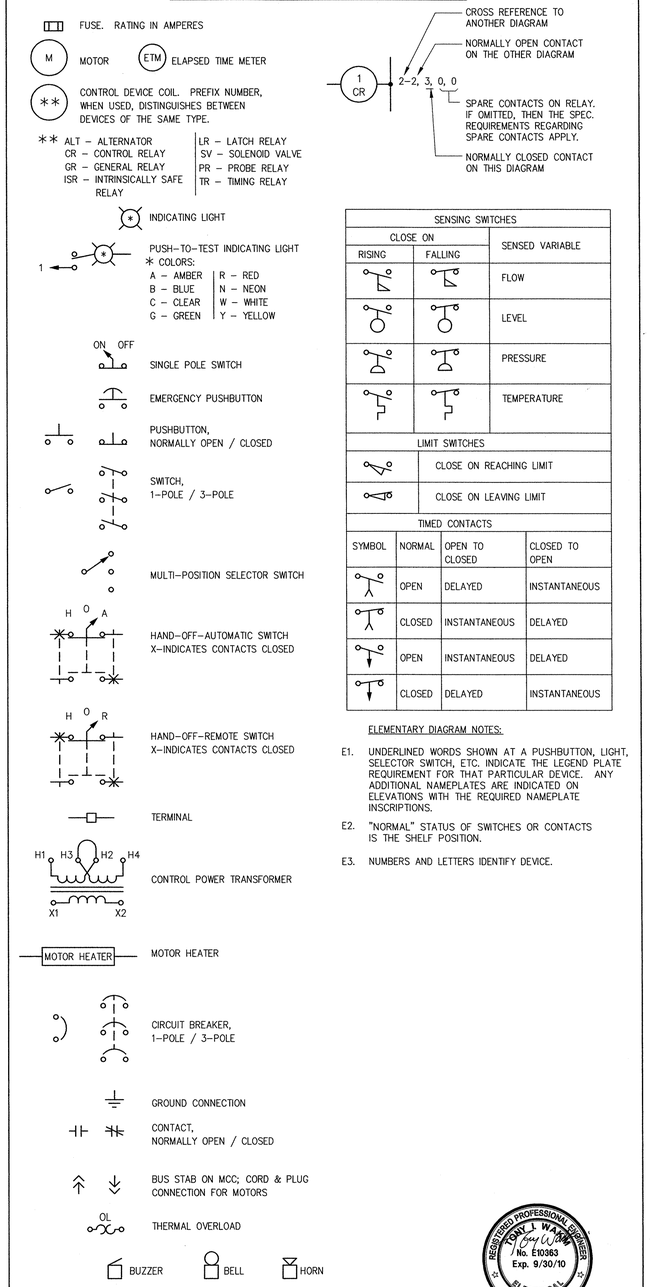

SENSING SWITCHES		
CLOSE ON		SENSED VARIABLE
RISING	FALLING	
		FLOW
		LEVEL
		PRESSURE
		TEMPERATURE

LIMIT SWITCHES	
	CLOSE ON REACHING LIMIT
	CLOSE ON LEAVING LIMIT

TIMED CONTACTS			
SYMBOL	NORMAL	OPEN TO CLOSED	CLOSED TO OPEN
	OPEN	DELAYED	INSTANTANEOUS
	CLOSED	INSTANTANEOUS	DELAYED
	OPEN	INSTANTANEOUS	DELAYED
	CLOSED	DELAYED	INSTANTANEOUS

ELEMENTARY DIAGRAM NOTES:

E1. UNDERLINED WORDS SHOWN AT A PUSHBUTTON, LIGHT, SELECTOR SWITCH, ETC. INDICATE THE LEGEND PLATE REQUIREMENT FOR THAT PARTICULAR DEVICE. ANY ADDITIONAL NAMEPLATES ARE INDICATED ON ELEVATIONS WITH THE REQUIRED NAMEPLATE INSCRIPTIONS.

E2. "NORMAL" STATUS OF SWITCHES OR CONTACTS IS THE SHELF POSITION.

E3. NUMBERS AND LETTERS IDENTIFY DEVICE.

REGISTERED PROFESSIONAL ENGINEER TONY I. WAKIM No. E10363 Exp. 9/30/10 ELECTRICAL STATE OF CALIFORNIA 2/23/10

As-Built Drawing No.

LAST EDIT DATE: Feb 23, 2010 – 10:12am

K/J CAD FILE: \\KJ\KJ-Root\KJ-Projects\Irvine\2006_Other\0687100_RCWD_Vail_Lake\Eng_and_Design\CAD\Pumps\95percent_DESIGN\0687100-E1.dwg

REVISIONS			
NUMBER	DATE	INITIALS	DESCRIPTION
1	11/17/09	TIW	CONFORMED SET
2	2/22/10	TIW	CONFORMED SET (REISSUED)

SCALE: AS NOTED
DESIGNED BY: WL
DRAWN BY: WL
CHECKED BY: TIW
FILE NAME: 0687100-E1.dwg

Kennedy/Jenks Consultants
10920 VIA FRONTERA, SUITE 110
SAN DIEGO, CALIFORNIA 92127
K/J 0687100.00

APPROVED BY TONY I. WAKIM, P.E.
REGISTERED ENGINEER NO. E10363 DATE –

Rancho Water
Rancho California Water District
42135 Winchester Road
Temecula, CA 92590
Phone: (951) 296-6900 Fax: (951) 296-6863

RANCHO CALIFORNIA WATER DISTRICT
APPROVED
COREY WALLACE 4/29/09
ENGINEERING MANAGER DATE
APPROVALS

KEN COPE 4/29/09	CE 4/29/09	TW 4/29/09
CONTRACTS/DATE	OPERATIONS/DATE	MAINTENANCE/DATE

VAIL LAKE PUMP STATION (PROJECT NO. D1317)

ELECTRICAL SYMBOLS AND ABBREVIATIONS

SHEET E–1 OF 35 SHEETS

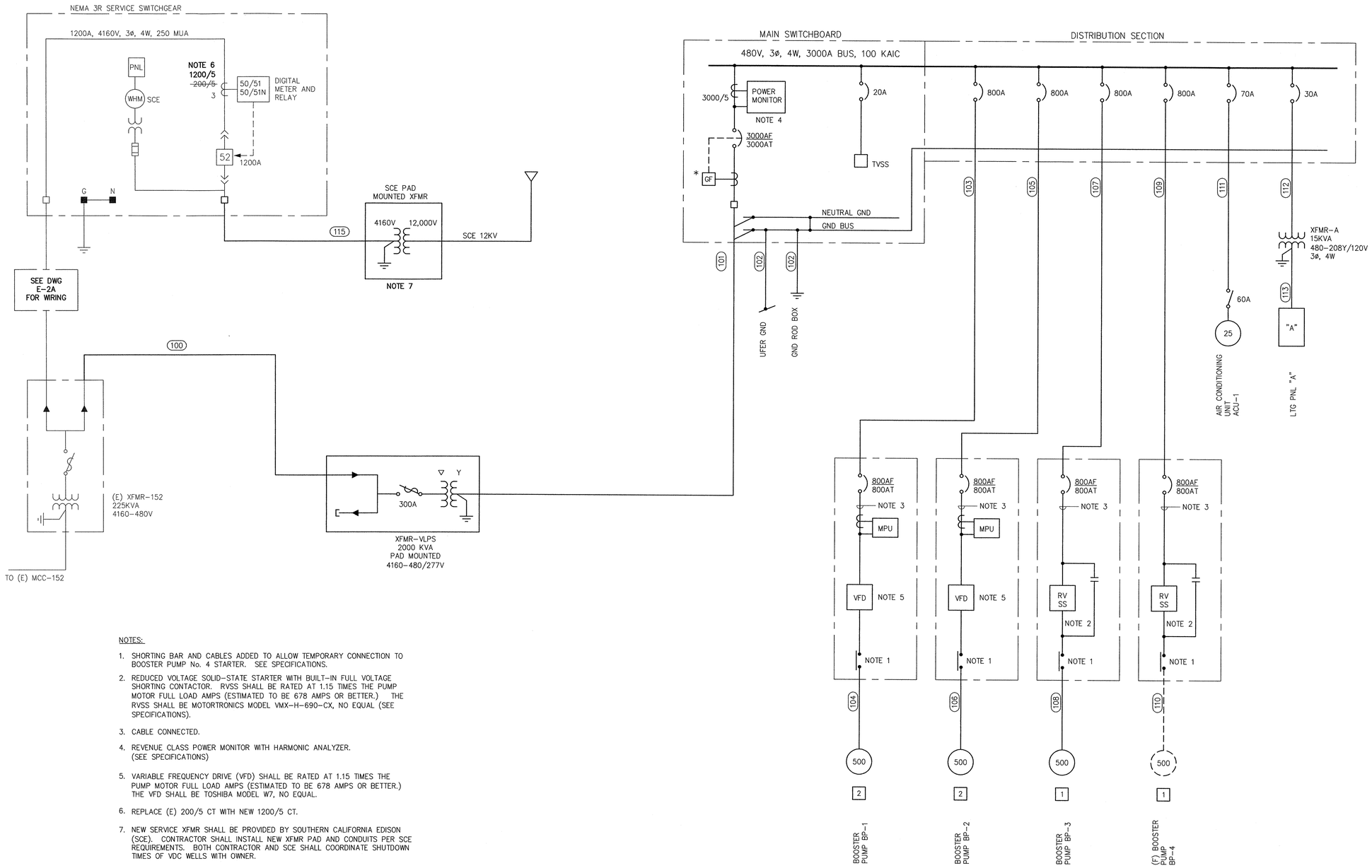

NOTES:

1. SHORTING BAR AND CABLES ADDED TO ALLOW TEMPORARY CONNECTION TO BOOSTER PUMP No. 4 STARTER. SEE SPECIFICATIONS.
2. REDUCED VOLTAGE SOLID-STATE STARTER WITH BUILT-IN FULL VOLTAGE SHORTING CONTACTOR. RVSS SHALL BE RATED AT 1.15 TIMES THE PUMP MOTOR FULL LOAD AMPS (ESTIMATED TO BE 678 AMPS OR BETTER.) THE RVSS SHALL BE MOTORTRONICS MODEL VMX-H-690-CX, NO EQUAL (SEE SPECIFICATIONS).
3. CABLE CONNECTED.
4. REVENUE CLASS POWER MONITOR WITH HARMONIC ANALYZER. (SEE SPECIFICATIONS)
5. VARIABLE FREQUENCY DRIVE (VFD) SHALL BE RATED AT 1.15 TIMES THE PUMP MOTOR FULL LOAD AMPS (ESTIMATED TO BE 678 AMPS OR BETTER.) THE VFD SHALL BE TOSHIBA MODEL W7, NO EQUAL.
6. REPLACE (E) 200/5 CT WITH NEW 1200/5 CT.
7. NEW SERVICE XFMR SHALL BE PROVIDED BY SOUTHERN CALIFORNIA EDISON (SCE). CONTRACTOR SHALL INSTALL NEW XFMR PAD AND CONDUITS PER SCE REQUIREMENTS. BOTH CONTRACTOR AND SCE SHALL COORDINATE SHUTDOWN TIMES OF VDC WELLS WITH OWNER.

REGISTERED PROFESSIONAL ENGINEER TONY I. WAKIM No. E10363 Exp. 9/30/10 ELECTRICAL STATE OF CALIFORNIA
2/23/10

As-Built Drawing No.

REVISIONS			
NUMBER	DATE	INITIALS	DESCRIPTION
1	11/17/09	TIW	CONFORMED SET
2	2/22/10	TIW	CONFORMED SET (REISSUED)

SCALE: AS NOTED
DESIGNED BY: TEK/GK
DRAWN BY: WL/JL
CHECKED BY: TIW
FILE NAME: 0687100-E2.dwg

Kennedy/Jenks Consultants
10920 VIA FRONTERA, SUITE 110
SAN DIEGO, CALIFORNIA 92127
K/J 0687100.00

APPROVED BY TONY I. WAKIM, P.E.
REGISTERED ENGINEER NO. E10363 DATE -

Rancho Water
Rancho California Water District
42135 Winchester Road
Temecula, CA 92590
Phone: (951) 296-6900 Fax: (951) 296-6863

RANCHO CALIFORNIA WATER DISTRICT
APPROVED
COREY WALLACE 4/29/09
ENGINEERING MANAGER DATE
APPROVALS

KEN COPE 4/29/09	CE 4/29/09	TW 4/29/09
CONTRACTS/DATE	OPERATIONS/DATE	MAINTENANCE/DATE

VAIL LAKE PUMP STATION
(PROJECT NO. D1317)

SINGLE LINE DIAGRAM

SHEET
E-2
OF 35 SHEETS

K/J CAD FILE: \\KJ\KJ-Root\KJ-Projects\Water\2006_Other\0687100_RCWD_Vail_Lake\Eng_and_Design\CAD\Pumps\35percent_DESIGN\0687100-E2.dwg LAST EDIT DATE: Feb 23, 2010 - 10:13am

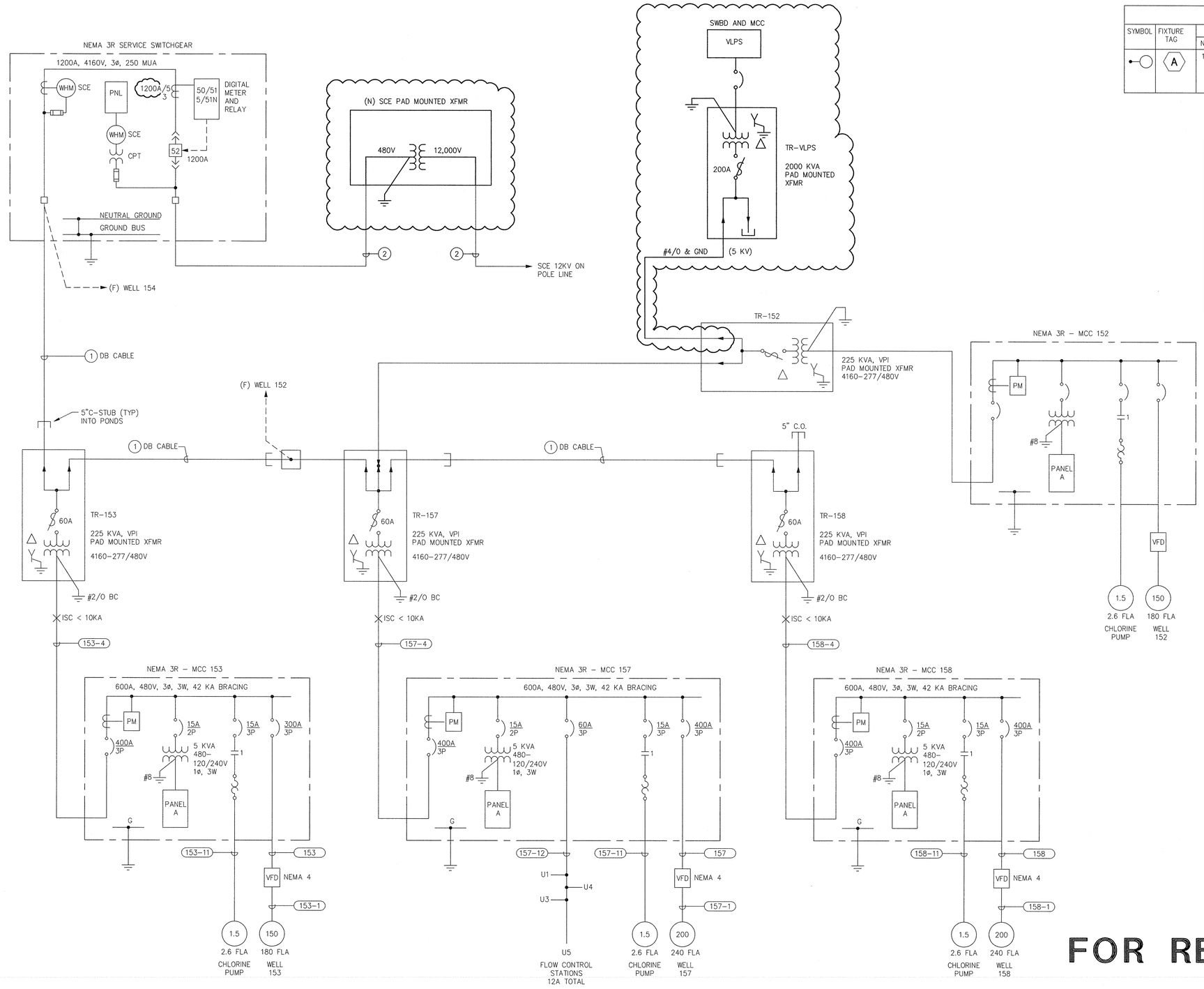

LIGHTING FIXTURE SCHEDULE

SYMBOL	FIXTURE TAG	LAMP No.	LAMP TYPE/WATTAGE	TOTAL WATTS	1 ø VOLTS	MOUNTING	DESCRIPTION	MANUFACTURER / CATALOG NUMBER
	A	1	LOW PRESSURE SODIUM	110	120	POLE	POLE MOUNTED LIGHTING STANDARD WITH 1 LUMINAIRE. SEE NOTE 1.	8' M.W.C. 4" SQ. BRONZE ANODIZED WITH SEB 90W LPS 120V W/PHOTOCELL, POLYCARBONATE LENS W/TYPE A REFLECTOR

NOTE: (FIXTURE SCHEDULE TYP FOR WELLS 153, 157 & 158)

1. POLE MOUNTED FIXTURE SHALL BE PHOTOCELL CONTROLLED.

PANELBOARD "A" SCHEDULE

TYPICAL FOR MCC 153, 157 AND 158

120/240V, 1 PHASE, 3 WIRE — 100 AMP BUS — 30 AMP MCB MAIN — MOUNTING: MCC

CKT No.	DESCRIPTION	VOLT-AMPS A	VOLT-AMPS B	AMPS/POLES	CKT No.	DESCRIPTION	VOLT-AMPS A	VOLT-AMPS B	AMPS/POLES
1	MCC LTG & RCPT	300		20/1	2	EXTERIOR LTG	110		20/1
3	MCC HEATER/FAN		300	20/1	4	TURBIDITY METER		300	20/1
5	CONTROL CIRCUIT	300		20/1	6	RTU	400		20/1
7	SPARE		–	20/1	8	SPACE		–	20/1
9	SPARE	–		20/1	10	SPACE	–		20/1
11	SPACE		–	20/1	12	SPACE		–	20/1
SUBTOTALS		600	300						
PHASE TOTALS							510	300	
TOTAL VOLT-AMPS								1710	

NOTES:

1. DB CABLE IS DIRECT BURIED 5KV, 3/C, #4/0, & GND 133% EPR, Cu. (REFER TO SPECS)
2. CONDUIT AND CONDUCTORS PER SCE REQUIREMENTS.

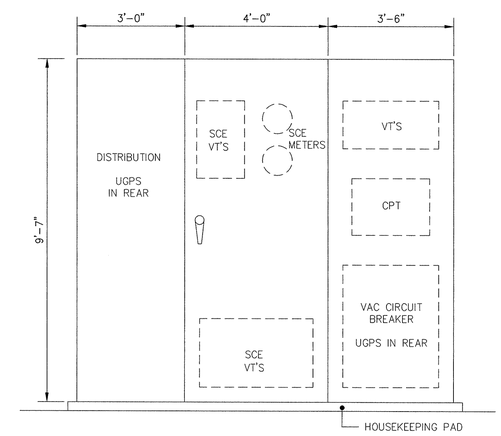

(E) SERVICE SWITCHGEAR ELEVATION

SCALE: 1/2"=1'-0"

0 1 2 3 4 6

1/2"=1'-0"

FOR REFERENCE ONLY

REGISTERED PROFESSIONAL ENGINEER TONY I. WAKIM No. E10363 Exp. 9/30/10 ELECTRICAL STATE OF CALIFORNIA

2/22/10

As-Built Drawing No.

REVISIONS			
NUMBER	DATE	INITIALS	DESCRIPTION
1	11/17/09	TIW	CONFORMED SET
2	2/22/10	TIW	CONFORMED SET (REISSUED)

SCALE: AS NOTED
DESIGNED BY: TEK
DRAWN BY: JL
CHECKED BY: TIW
FILE NAME: 0687100-E2A.dwg

Kennedy/Jenks Consultants
10920 VIA FRONTERA, SUITE 110
SAN DIEGO, CALIFORNIA 92127
K/J 0687100.00

APPROVED BY TONY I. WAKIM, P.E.
REGISTERED ENGINEER NO. E10363 DATE –

Rancho Water
Rancho California Water District
42135 Winchester Road
Temecula, CA 92590
Phone: (951) 296-6900 Fax: (951) 296-6863

RANCHO CALIFORNIA WATER DISTRICT
APPROVED
COREY WALLACE 4/29/09
ENGINEERING MANAGER DATE
APPROVALS

KEN COPE 4/29/09	CE 4/29/09	TW 4/29/09
CONTRACTS/DATE	OPERATIONS/DATE	MAINTENANCE/DATE

VAIL LAKE PUMP STATION (PROJECT NO. D1317)

4160 VOLT SINGLE LINE DIAGRAM

SHEET E-2A OF 35 SHEETS

K/J CAD FILE: \\KJ\KJ-Root\KJ-Projects\Irvine\2006_Other\0687100_RCWD_Vail_Lake\Eng_and_Design\CAD\Pumps\95percent_DESIGN\0687100-E2A.dwg LAST EDIT DATE: Feb 23, 2010 - 10:13am

DISTRIBUTION PANEL NAMEPLATE SCHEDULE	
	DESCRIPTION
1	TVSS
2	BOOSTER PUMP BP-1
3	BOOSTER PUMP BP-2
4	BOOSTER PUMP BP-3
5	BOOSTER PUMP BP-4
6	AIR CONDITIONING UNIT ACU-1
7	TRANSFORMER "A"

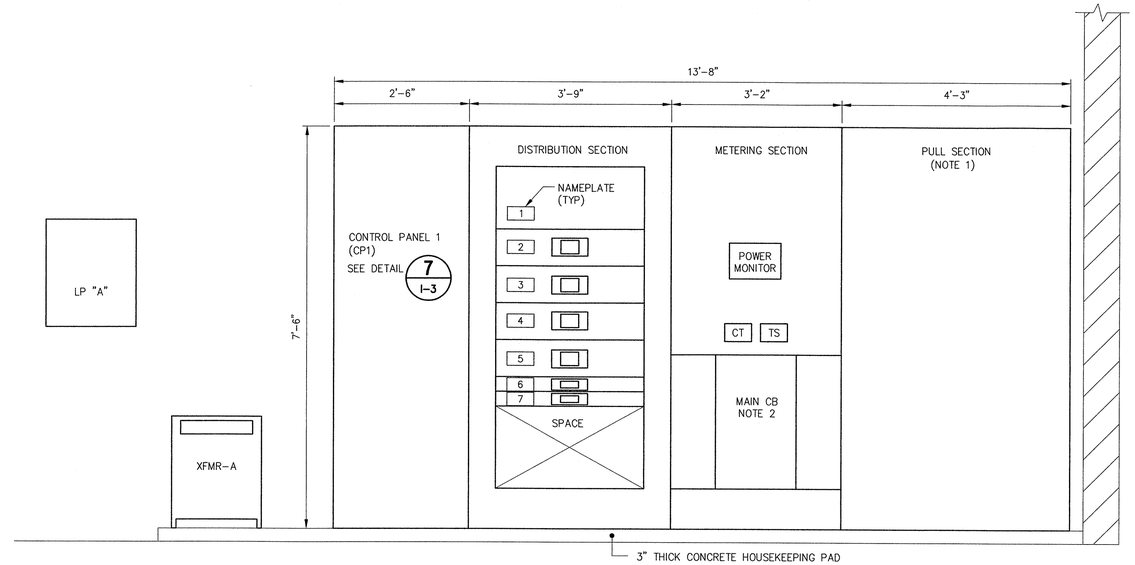

MAIN SERVICE SWITCHBOARD ELEVATION

SCALE: 3/4"=1'-0"

NOTES:
1. SERVICE ENTRANCE RATED
2. FIXED CONFIGURATION

	ESCUTCHEON SCHEDULE
1	POWER ON
2	LOW LEVEL
3	MOTOR OVER TEMPERATURE
4	HAND-OFF-REMOTE

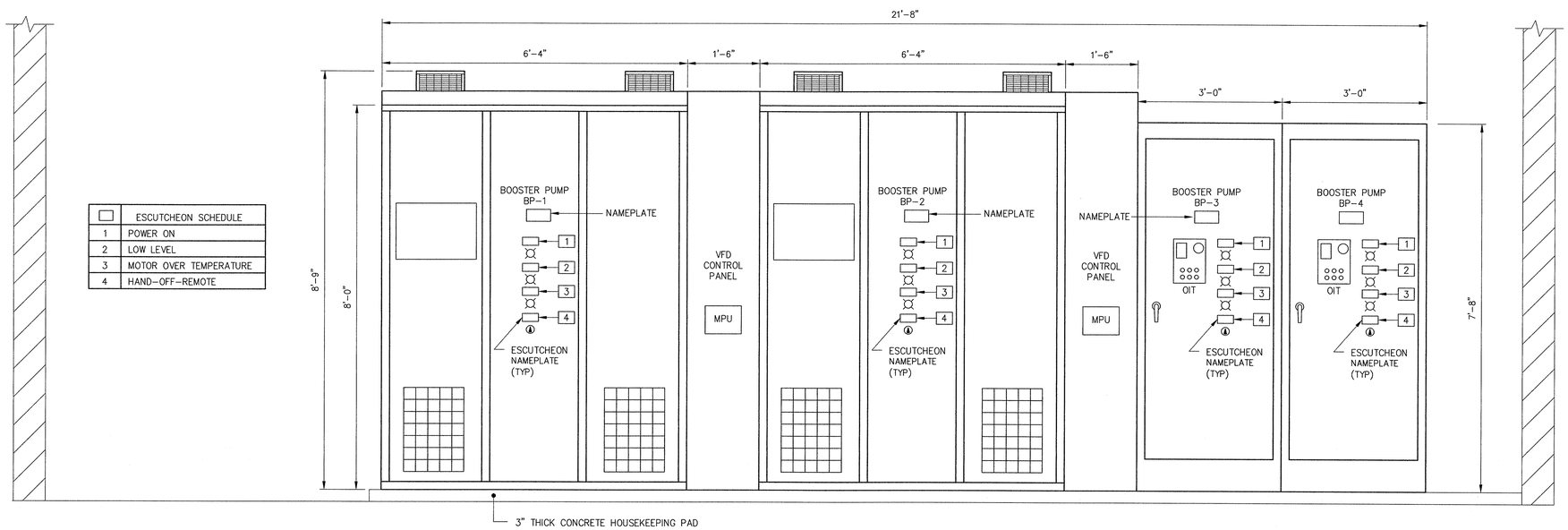

VFD/RVSS EQUIPMENT PANEL ELEVATION

SCALE: 3/4"=1'-0"

0 1 2 3 4
3/4"=1'-0"

REGISTERED PROFESSIONAL ENGINEER
TONY I. WAKIM
No. E10363
Exp. 9/30/10
ELECTRICAL
STATE OF CALIFORNIA
2/23/10

As-Built Drawing No.

REVISIONS			
NUMBER	DATE	INITIALS	DESCRIPTION
1	11/17/09	TIW	CONFORMED SET
2	2/22/10	TIW	CONFORMED SET (REISSUED)

SCALE: AS NOTED
DESIGNED BY: TEK/GR
DRAWN BY: JL/WL
CHECKED BY: TIW
FILE NAME: 0687100-E3.dwg

Kennedy/Jenks Consultants
10920 VIA FRONTERA, SUITE 110
SAN DIEGO, CALIFORNIA 92127
K/J 0687100.00

APPROVED BY TONY I. WAKIM, P.E.
REGISTERED ENGINEER NO. E10363 DATE -

Rancho Water
Rancho California Water District
42135 Winchester Road
Temecula, CA 92590
Phone: (951) 296-6900 Fax: (951) 296-6863

RANCHO CALIFORNIA WATER DISTRICT
APPROVED
COREY WALLACE 4/29/09
ENGINEERING MANAGER DATE
APPROVALS

KEN COPE 4/29/09	CE 4/29/09	TW 4/29/09
CONTRACTS/DATE	OPERATIONS/DATE	MAINTENANCE/DATE

VAIL LAKE PUMP STATION
(PROJECT NO. D1317)

SWITCHBOARD AND EQUIPMENT ELEVATION

SHEET
E-3
OF 35 SHEETS

K/J CAD FILE: \\KJ\KJ-Root\KJ-Projects\Irvine\2006_Other\0687100_RCWD_Vail_Lake\Eng_and_Design\CAD\Pumps\95percent_DESIGN\0687100-E3.dwg LAST EDIT DATE: Feb 23, 2010 - 10:13am

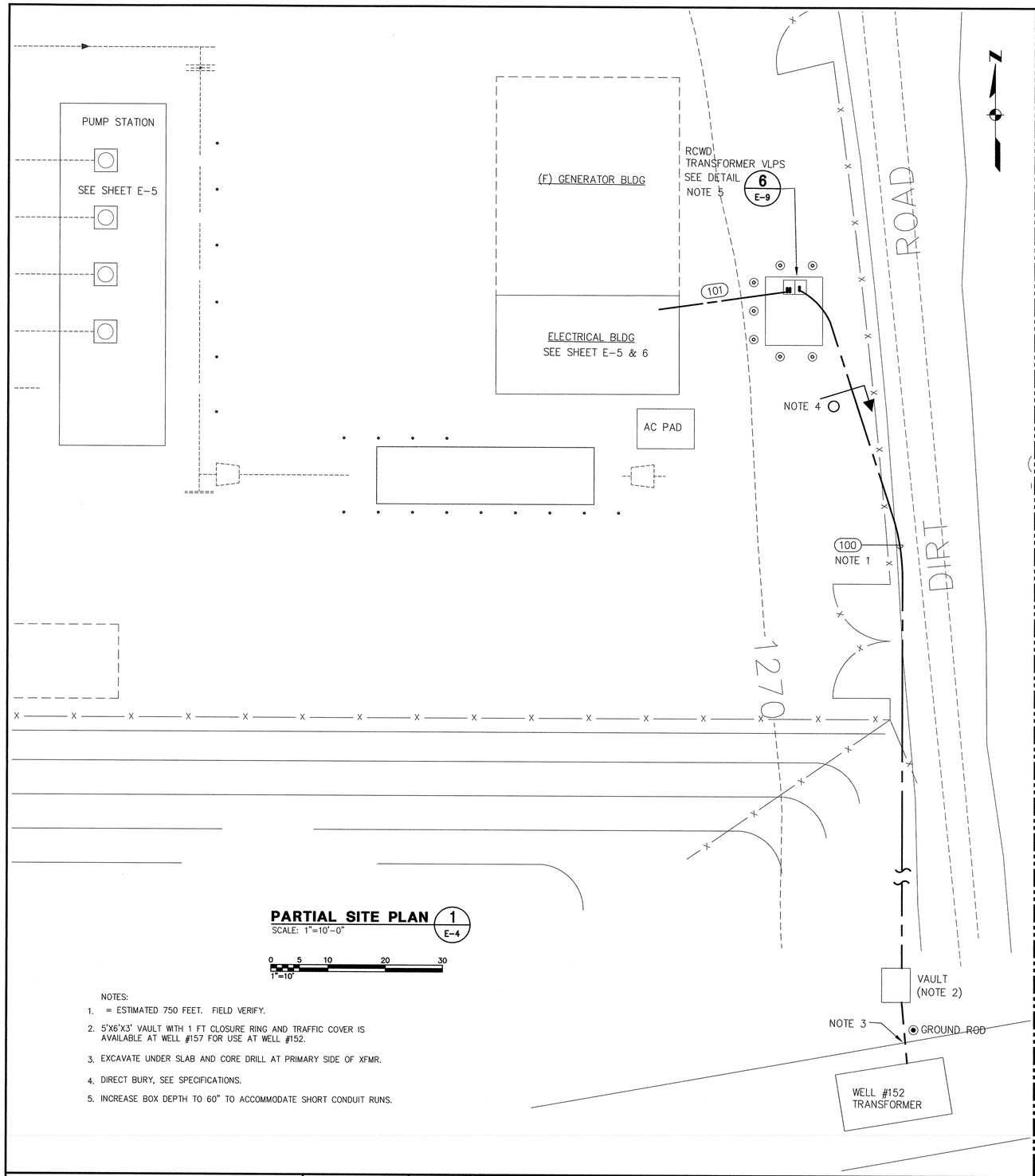

PARTIAL SITE PLAN 1 / E-4

SCALE: 1"=10'-0"

0 5 10 20 30
1"=10'

NOTES:

1. = ESTIMATED 750 FEET. FIELD VERIFY.
2. 5'X6'X3' VAULT WITH 1 FT CLOSURE RING AND TRAFFIC COVER IS AVAILABLE AT WELL #157 FOR USE AT WELL #152.
3. EXCAVATE UNDER SLAB AND CORE DRILL AT PRIMARY SIDE OF XFMR.
4. DIRECT BURY, SEE SPECIFICATIONS.
5. INCREASE BOX DEPTH TO 60" TO ACCOMMODATE SHORT CONDUIT RUNS.

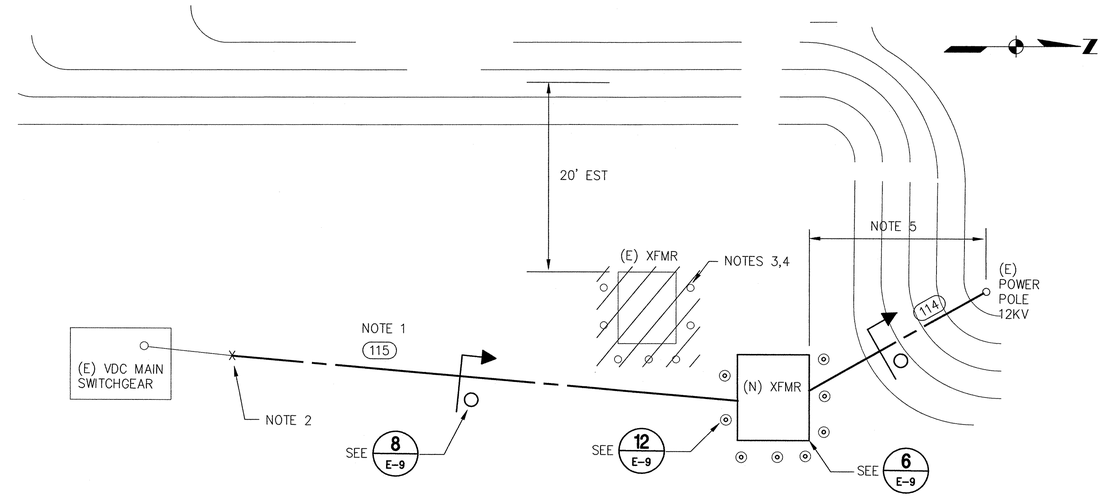

PARTIAL SITE PLAN 2 / E-4

SCALE: 1"=10'-0"

0 5 10 20 30
1"=10'

NOTES:

1. ESTIMATED 80 FEET. FIELD VERIFY.
2. CUT INTO (E) CONDUIT AT 5 FT BOUNDARY.
3. CONTRACTOR TO REMOVE AND DISCARD (E) GUARD POSTS.
4. SCE TO REMOVE OLD TRANSFORMER. CONTRACTOR TO REMOVE ALL WIRING, PLUG ALL HOLES AND ABANDON IN PLACE.
5. REGRADE AND COMPACT SOIL IN THIS AREA AS REQUIRED FOR ELECTRICAL VAULT INSTALLATION.

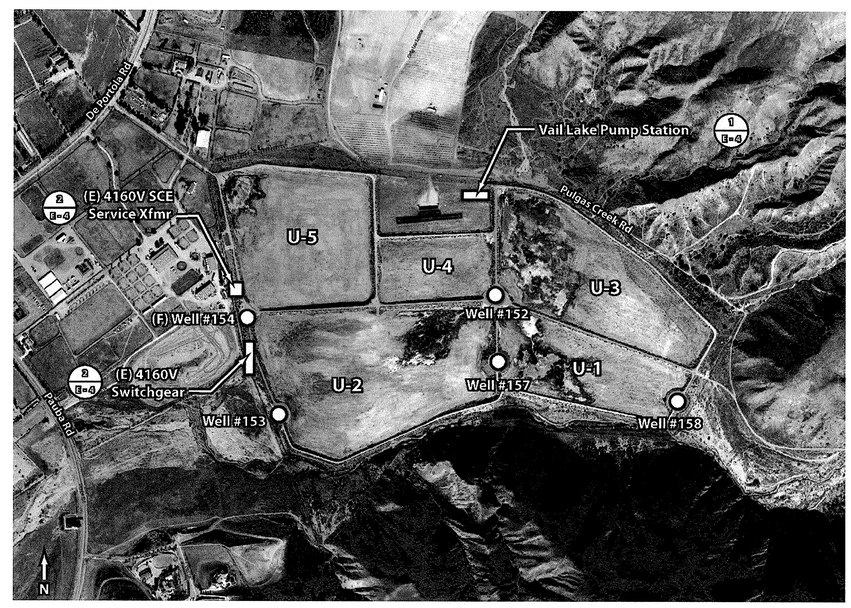

REGISTERED PROFESSIONAL ENGINEER TONY I. WAKIM No. E10363 Exp. 9/30/10 ELECTRICAL STATE OF CALIFORNIA 2/23/10

As-Built Drawing No.

REVISIONS			
NUMBER	DATE	INITIALS	DESCRIPTION
1	11/17/09	TIW	CONFORMED SET
2	2/22/10	TIW	CONFORMED SET (REISSUED)

SCALE: AS NOTED
DESIGNED BY: TEK
DRAWN BY: JL
CHECKED BY: TIW
FILE NAME: 0687100-E4.dwg

Kennedy/Jenks Consultants
10920 VIA FRONTERA, SUITE 110
SAN DIEGO, CALIFORNIA 92127
K/J 0687100.00

APPROVED BY TONY I. WAKIM, P.E.
REGISTERED ENGINEER NO. E10363 DATE -

Rancho Water
Rancho California Water District
42135 Winchester Road
Temecula, CA 92590
Phone: (951) 296-6900 Fax: (951) 296-6863

RANCHO CALIFORNIA WATER DISTRICT
APPROVED
COREY WALLACE 4/29/09
ENGINEERING MANAGER DATE
APPROVALS

KEN COPE 4/29/09	CE 4/29/09	TW 4/29/09
CONTRACTS/DATE	OPERATIONS/DATE	MAINTENANCE/DATE

VAIL LAKE PUMP STATION
(PROJECT NO. D1317)

ELECTRICAL SITE PLAN

SHEET E-4 OF 35 SHEETS

K/J CAD FILE: \\Kj\KJ-Root\KJ-Projects\Irvine\2006_Other\0687100_RCWD_Vail_Lake\Eng_and_Design\CAD\Pumps\95percent_DESIGN\0687100-E4.dwg LAST EDIT DATE: Feb 23, 2010 - 10:18am

NOTE:

1. SEE CONDUIT SCHEDULE SHEET E-8, TYPICAL.
2. MINIMUM DEPTH 42" BELOW FINISHED GRADE.
3. PROVIDE NEMA 3R ENCLOSURE WITH KEY LOCK, FOR AUTHORITY HAVING JURISDICTION.

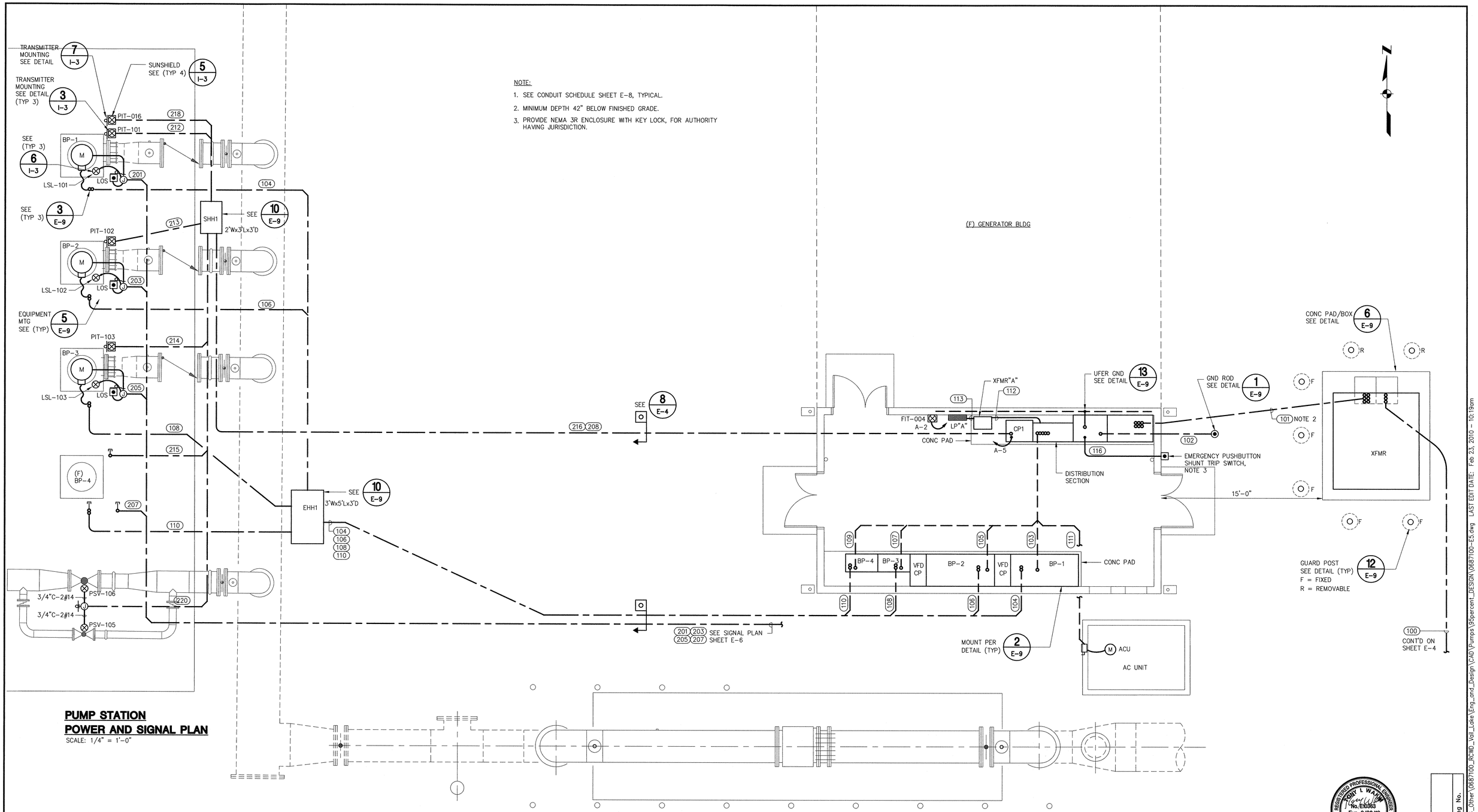

PUMP STATION POWER AND SIGNAL PLAN

SCALE: 1/4" = 1'-0"

ELECTRICAL BUILDING POWER PLAN

SCALE: 1/4" = 1'-0"

0 2 4 8 12

1/4"=1'-0"

REGISTERED PROFESSIONAL ENGINEER TONY I. WAKIM No. E10363 Exp. 9/30/10 ELECTRICAL STATE OF CALIFORNIA 2/23/10

As-Built Drawing No.

REVISIONS			
NUMBER	DATE	INITIALS	DESCRIPTION
1	11/17/09	TIW	CONFORMED SET
2	2/22/10	TIW	CONFORMED SET (REISSUED)

SCALE: AS NOTED
DESIGNED BY: TEK
DRAWN BY: JL/WL
CHECKED BY: TIW
FILE NAME: 0687100-E5.dwg

Kennedy/Jenks Consultants
10920 VIA FRONTERA, SUITE 110
SAN DIEGO, CALIFORNIA 92127
K/J 0687100.00

APPROVED BY TONY I. WAKIM, P.E.
REGISTERED ENGINEER NO. E10363 DATE

Rancho Water
Rancho California Water District
42135 Winchester Road
Temecula, CA 92590
Phone: (951) 296-6900 Fax: (951) 296-6863

RANCHO CALIFORNIA WATER DISTRICT
APPROVED
COREY WALLACE 4/29/09
ENGINEERING MANAGER DATE
APPROVALS

KEN COPE 4/29/09	CE 4/29/09	TW 4/29/09
CONTRACTS/DATE	OPERATIONS/DATE	MAINTENANCE/DATE

VAIL LAKE PUMP STATION (PROJECT NO. D1317)

ELECTRICAL BUILDING AND PUMP STATION POWER AND SIGNAL PLAN

SHEET E-5 OF 35 SHEETS

K/J CAD FILE:\ \\KJ\KJ-Root\KJ-Projects\Irvine\2006_Other\0687100_RCWD_Vail_Lake\Eng_and_Design\CAD\Pumps\95percent_DESIGN\0687100-E5.dwg LAST EDIT DATE: Feb 23, 2010 - 10:19am

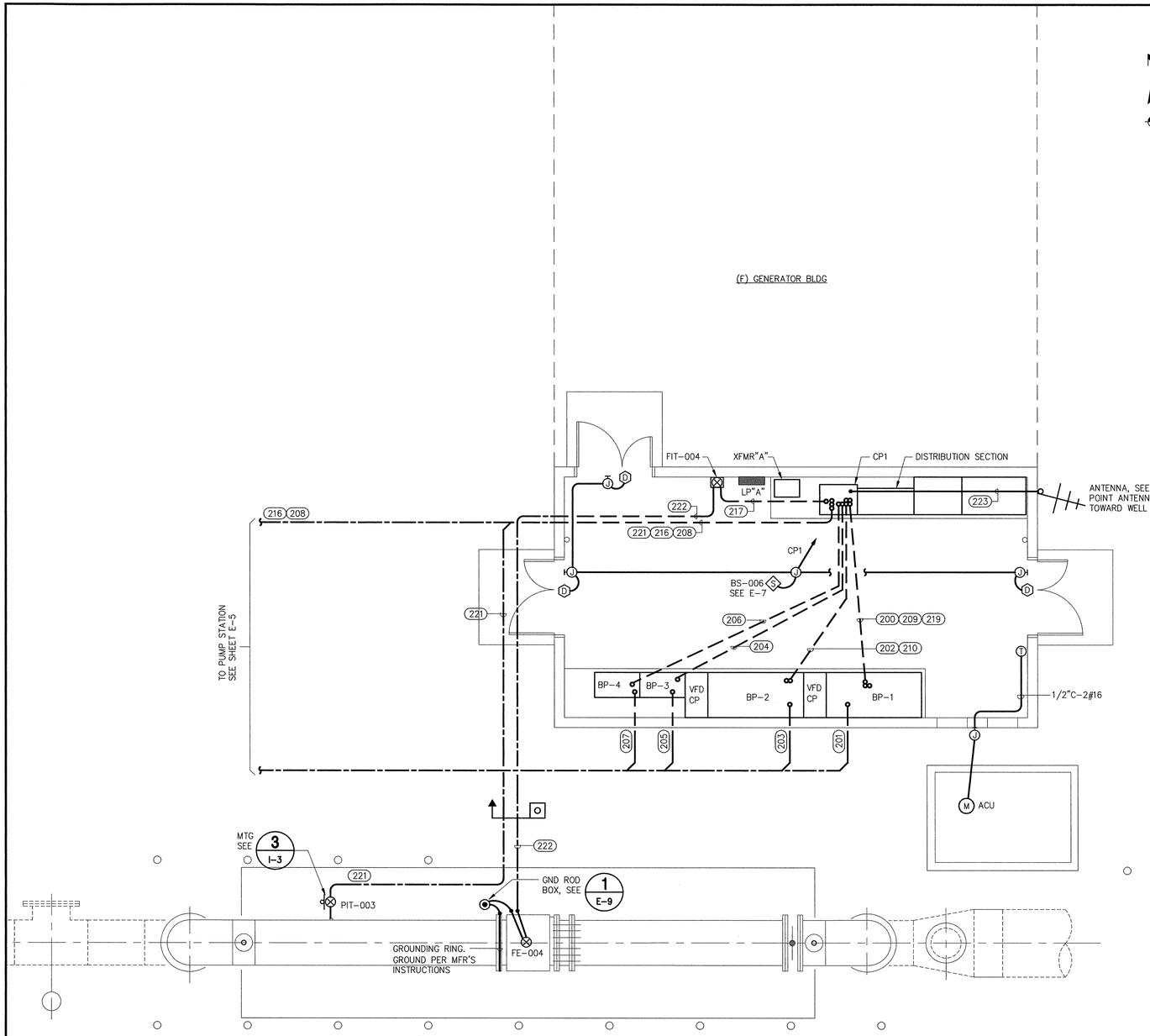

SIGNAL PLAN

SCALE: 1/4" = 1'-0"

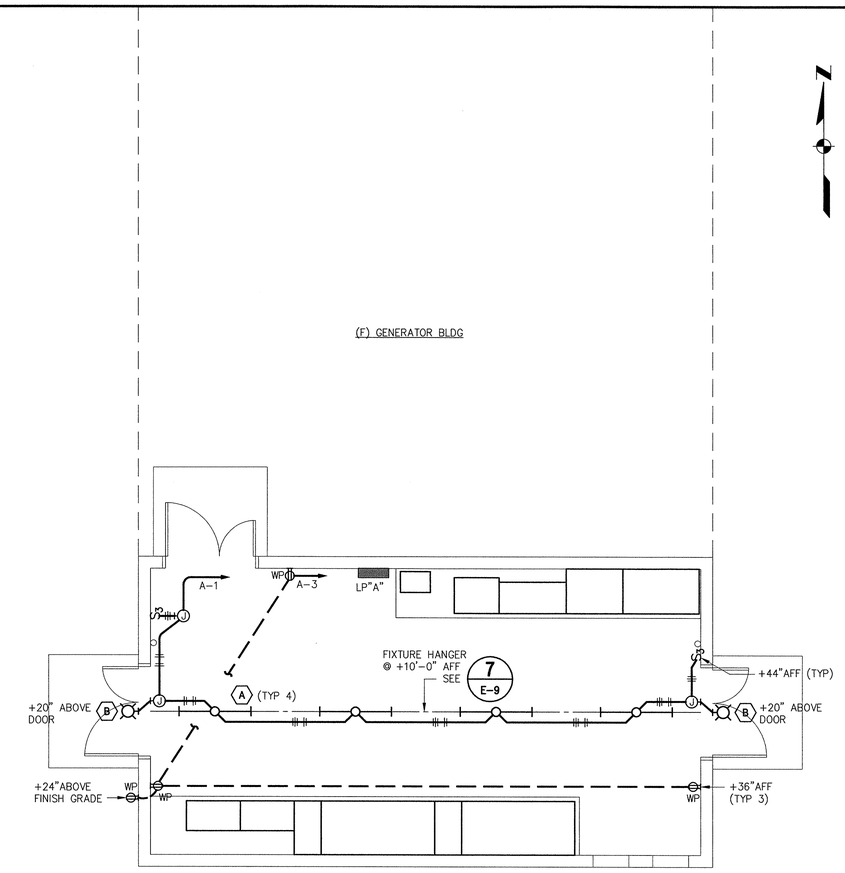

LIGHTING PLAN

SCALE: 1/4" = 1'-0"

0 2 4 8 12
1/4"=1'-0"

REGISTERED PROFESSIONAL ENGINEER
TONY I. WAKIM
No. E10363
Exp. 9/30/10
ELECTRICAL
STATE OF CALIFORNIA
4/23/10

As-Built Drawing No.

REVISIONS			
NUMBER	DATE	INITIALS	DESCRIPTION
1	11/17/09	TIW	CONFORMED SET
2	2/22/10	TIW	CONFORMED SET (REISSUED)

SCALE: AS NOTED
DESIGNED BY: WL/GR
DRAWN BY: JL/WL
CHECKED BY: TIW
FILE NAME: 0687100-E6.dwg

Kennedy/Jenks Consultants
10920 VIA FRONTERA, SUITE 110
SAN DIEGO, CALIFORNIA 92127
K/J 0687100.00

APPROVED BY TONY I. WAKIM, P.E.
REGISTERED ENGINEER NO. E10363 DATE –

Rancho Water
Rancho California Water District
42135 Winchester Road
Temecula, CA 92590
Phone: (951) 296-6900 Fax: (951) 296-6863

RANCHO CALIFORNIA WATER DISTRICT
APPROVED
COREY WALLACE 4/29/09
ENGINEERING MANAGER DATE
APPROVALS

KEN COPE 4/29/09	CE 4/29/09	TW 4/29/09
CONTRACTS/DATE	OPERATIONS/DATE	MAINTENANCE/DATE

VAIL LAKE PUMP STATION
(PROJECT NO. D1317)

ELECTRICAL BUILDING SIGNAL AND LIGHTING PLANS

SHEET
E-6
OF 35 SHEETS

K/J CAD FILE: \\KJ\KJ-Root\KJ-Projects\Irvine\2006_Other\0687100_RCWD_Vail_Lake\Eng_and_Design\CAD\Pumps\95percent_DESIGN\0687100-E6.dwg LAST EDIT DATE: Feb 23, 2010 – 10:19am

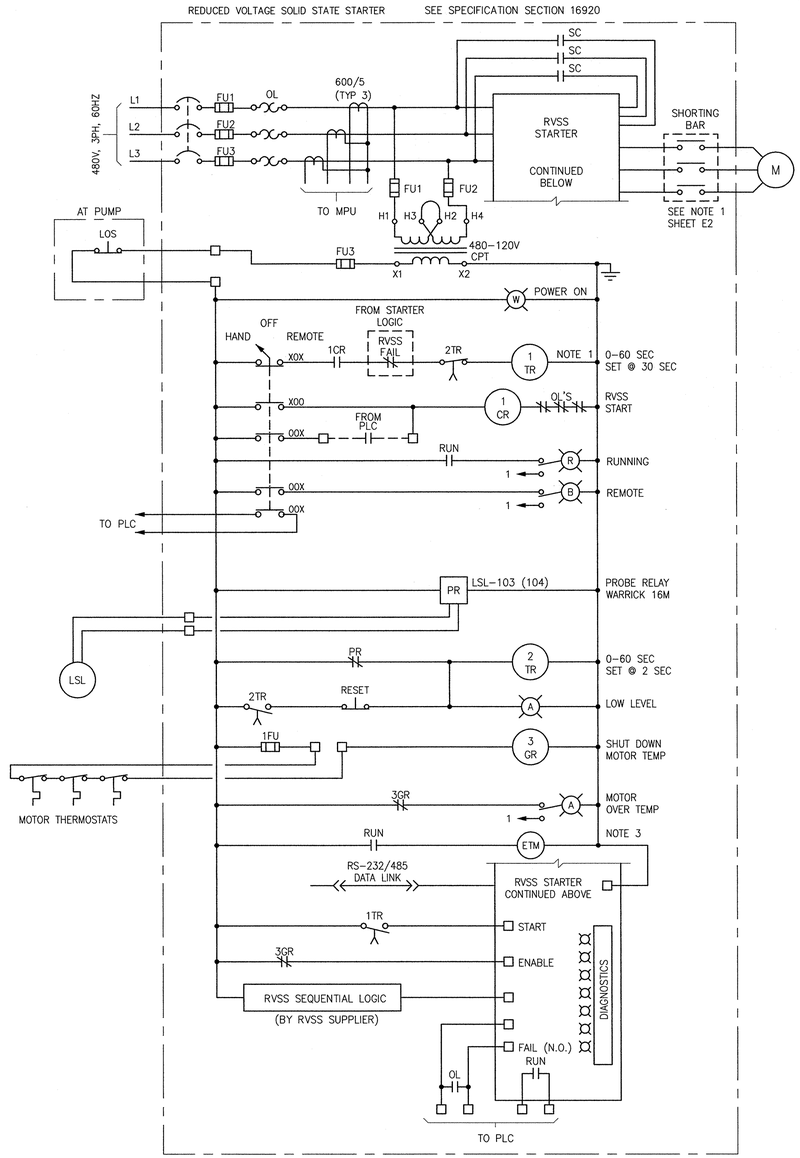

DIAGRAM 1

BOOSTER PUMPS BP-3, BP-4

NOTES:

1. PUMPS ARE STAGGER STARTED BY 30 SECOND DELAY FOR SURGE CONTROL.
2. CABINET OVER TEMPERATURE SWITCH SET AT 95° C.
3. PART OF DIGITAL DISPLAY.

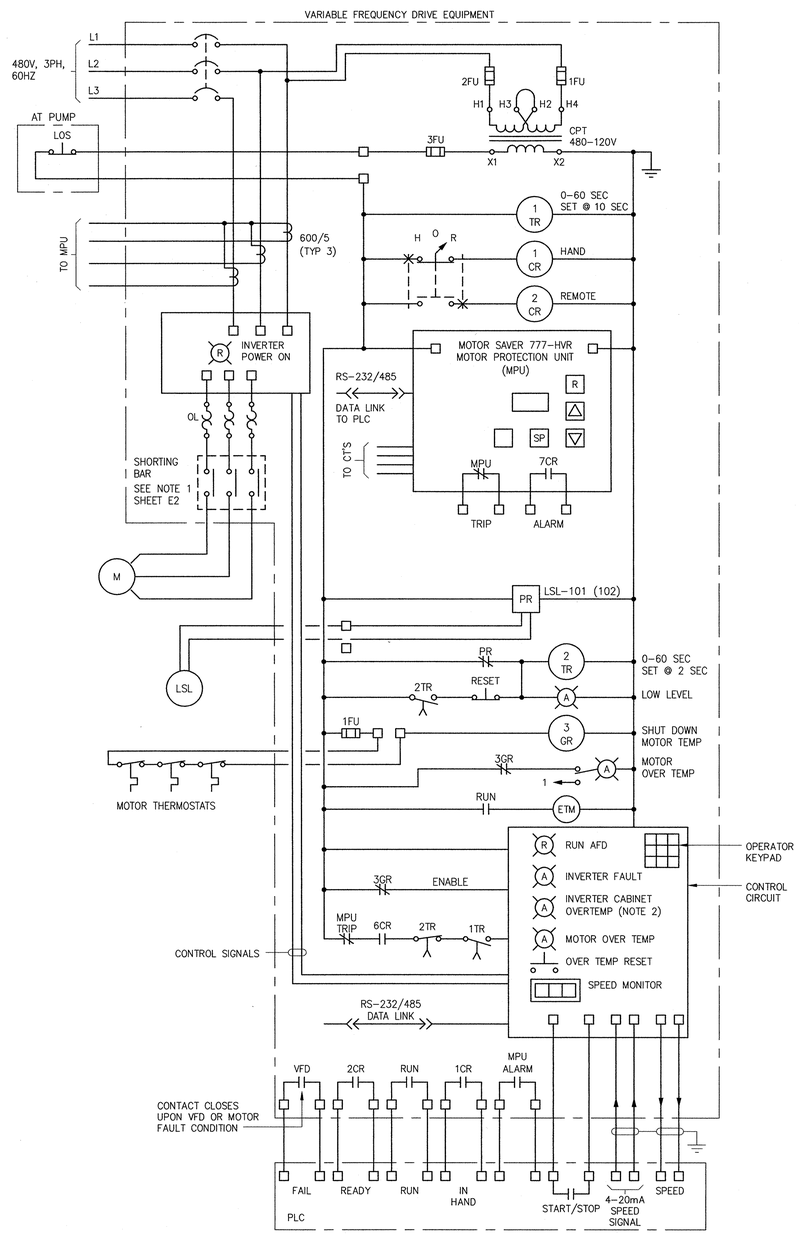

DIAGRAM 2

BOOSTER PUMPS BP-1, BP-2

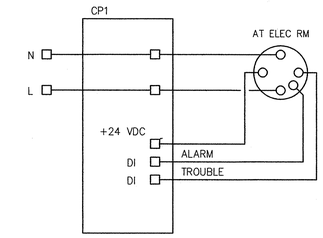

DIAGRAM 3

SMOKE ALARM WIRING DIAGRAM

REGISTERED PROFESSIONAL ENGINEER TONY L WAKIM No. E10363 Exp. 9/30/10 ELECTRICAL STATE OF CALIFORNIA

2/23/10

As-Built Drawing No.

REVISIONS			
NUMBER	DATE	INITIALS	DESCRIPTION
1	11/17/09	TIW	CONFORMED SET
2	2/22/10	TIW	CONFORMED SET (REISSUED)

SCALE: AS NOTED
DESIGNED BY: GK
DRAWN BY: WL
CHECKED BY: TIW
FILE NAME: 0687100-E7.dwg

Kennedy/Jenks Consultants
10920 VIA FRONTERA, SUITE 110
SAN DIEGO, CALIFORNIA 92127
K/J 0687100.00

APPROVED BY TONY I. WAKIM, P.E.
REGISTERED ENGINEER NO. E10363 DATE -

Rancho Water
Rancho California Water District
42135 Winchester Road
Temecula, CA 92590
Phone: (951) 296-6900 Fax: (951) 296-6863

RANCHO CALIFORNIA WATER DISTRICT
APPROVED
COREY WALLACE — ENGINEERING MANAGER — 4/29/09 DATE
APPROVALS

KEN COPE 4/29/09	CE 4/29/09	TW 4/29/09
CONTRACTS/DATE	OPERATIONS/DATE	MAINTENANCE/DATE

VAIL LAKE PUMP STATION (PROJECT NO. D1317)

ELEMENTARY DIAGRAMS

SHEET E-7 OF 35 SHEETS

K/J CAD FILE: \\KJ\KJ-Root\KJ-Projects\Irvine\2006_Other\0687100_RCWD_Vail_Lake\Eng_and_Design\CAD\Pumps\3Spercent_DESIGN\0687100-E7.dwg LAST EDIT DATE: Feb 23, 2010 - 10:20am

CONDUIT AND WIRE SCHEDULE

NUMBER	FROM	TO	CONDUIT SIZE X"	POWER	GROUND	CONTROL	SIGNAL	REMARKS
100	(E) XFMR-152	XFMR-VLPS	DIRECT BURY	3#4/0 & GND				5KV, MV-105 CABLE
101	XFMR-VLPS	MAIN SWBD	(6) 4	3 #750 KCMIL	1 #2/0			1 #750 NEUTRAL, NOTE 1
102	MAIN SWBD	UFER GND AND GND ROD BOX	1		1 #4/0			
103	DISTRIBUTION SECTION	BOOSTER PUMP 1 VFD	(2) 3	3 #500 KCMIL	1 #1/0			WIRE FILL PER CONDUIT
104	BOOSTER PUMP 1 VFD	BOOSTER PUMP 1	(2) 3	3 #500 KCMIL	1 #1/0			WIRE FILL PER CONDUIT
105	DISTRIBUTION SECTION	BOOSTER PUMP 2 VFD	(2) 3	3 #500 KCMIL	1 #1/0			WIRE FILL PER CONDUIT
106	BOOSTER PUMP 2 VFD	BOOSTER PUMP 2	(2) 3	3 #500 KCMIL	1 #1/0			WIRE FILL PER CONDUIT
107	DISTRIBUTION SECTION	BOOSTER PUMP 3 RVSS	(2) 3	3 #500 KCMIL	1 #1/0			WIRE FILL PER CONDUIT
108	BOOSTER PUMP 3 RVSS	BOOSTER PUMP 3	(2) 3	3 #500 KCMIL	1 #1/0			WIRE FILL PER CONDUIT
109	DISTRIBUTION SECTION	BOOSTER PUMP 4 RVSS	(2) 3	3 #500 KCMIL	1 #1/0			WIRE FILL PER CONDUIT
110	BOOSTER PUMP 4 RVSS	(F) BOOSTER PUMP 4	(2) 3	–	–			EMPTY CONDUIT WITH PULL ROPE
111	DISTRIBUTION SECTION	AIR CONDITIONER UNIT	1	3 #4	1 #4			
112	DISTRIBUTION SECTION	LTG XFMR-A	3/4	3 #10	1 #10			
113	LTG XFMR-A	LP "A"	3/4	3 #6	1 #6			
114	POWER POLE	SERVICE XFMR	3					BY SCE
115	SERVICE XFMR	VDC MAIN SWITCHGEAR	4					BY SCE
116	MAIN SWITCHBOARD	EMERGENCY PUSHBUTTON SWITCH	3/4	2#12	1 #12			
200	CP1	BOOSTER PUMP 1 VFD	1			12 #14		
201	BOOSTER PUMP 1 VFD	BOOSTER PUMP 1	1			11 #14		5 SPARE, COIL UP IN JB
202	CP1	BOOSTER PUMP 2 VFD	1			12 #14		
203	BOOSTER PUMP 2 VFD	BOOSTER PUMP 2	1			11 #14		5 SPARE, COIL UP IN JB
204	CP1	BOOSTER PUMP 3 RVSS	1			10 #14		
205	BOOSTER PUMP 3 RVSS	BOOSTER PUMP 3	1			11 #14		5 SPARE, COIL UP IN JB
206	CP1	BOOSTER PUMP 4 RVSS	1			10 #14		
207	BOOSTER PUMP 4 RVSS	(F) BOOSTER PUMP 4	1					EMPTY CONDUIT WITH PULL ROPE
208	CP-1	SHH1	1					EMPTY CONDUIT WITH PULL ROPE
209	CP1	BOOSTER PUMP 1 VFD	3/4				1 TSP	
210	CP1	BOOSTER PUMP 2 VFD	3/4				2 TSP	
211	CP1	METER VAULT FOR LSHH-008/ZS-012	3/4			4 #14		
212	SHH1	BOOSTER PUMP 1, PIT-101	3/4				1 TSP	
213	SHH1	BOOSTER PUMP 2, PIT-102	3/4				1 TSP	
214	SHH1	BOOSTER PUMP 3, PIT-103	3/4				1 TSP	
215	SHH1	(F) BOOSTER PUMP 4, PIT-104	3/4				1 TSP	(F) COIL UP IN SHH-1
216	CP-1	SHH1	2				5 TSP	+ 4#14
217	CP-1	FIT-004	1				2 TSP	+ SIGNAL & PULSE
218	SHH-1	PIT-016	3/4				1 TSP	
219	CP-1	BOOSTER PUMP 1	1				1 DATA	1#18 TRIAD WITH SHIELD
220	SHH1	PRESSURE RELIEF VALVE, PSV-105/106	3/4			4 #14		
221	CP-1	PIT-003	3/4				1 TSP	
222	FIT-004	FE-004	3/4					MFR CABLE
223	CP-1	ANTENNA	1 1/2					ANTENNA CABLE

NOTES:

1. WIRE FILL PER CONDUIT.

PANELBOARD "A" SCHEDULE

208Y/120 VOLTS, 3 PHASE, 4 WIRE — 100 AMP BUS — 60 AMP MAIN — MOUNTING: WALL

CKT No.	DESCRIPTION	CONNECTED VOLT-AMPS A	B	C	AMPS/POLES	CKT No.	DESCRIPTION	CONNECTED VOLT-AMPS A	B	C	AMPS/POLES
1	LTG-ELEC BLDG	460			20/1	2	FIT-004	14			20/1
3	RCPT-ELEC BLDG		720		20/1 ◢	4	SPARE		–		20/1
5	CONTROL PANEL 1 (CP1)			500	20/1	6	SPACE				
7	SPARE	–			20/1	8					
9	SPARE		–		20/1	10					
11	SPARE			–	20/1	12					
13	SPACE					14					
15						16					
17						18					
19						20					
21						22					
23						24					
SUBTOTALS		460	720	500				14	–	–	
PHASE TOTALS								474	720	500	
TOTAL VOLT-AMPS									1694		

◢ = GFI CIRCUIT BREAKER

LIGHT FIXTURE SCHEDULE

FIXTURE TYPE	LAMP No.	LAMP TYPE/WATTAGE	TOTAL WATTS	1 ø VOLTS	MOUNTING ARRANGEMENT	DESCRIPTION	CATALOG NUMBER
A	3	FLUOR 2950 LUMENS T8 32W 4100K	92	120	SURFACE OR PENDENT	4 FOOT OPEN STRIPLIGHT WITH WIRE GUARD. STEEL BOX CONSTRUCTION ON WHITE BAKED ENAMEL FINISH. 1 ELECTRONIC BALLAST. UL LISTED FOR DAMP LOCATION.	PRUDENTIAL LIGHTING P102-WG-3T8-04-YGW-SC-120
B	1	HPS 2250 LUMENS 35 WATTS LU35 MED	46	120	WALL	CORROSION RESISTANT DIE-CAST ALUMINUM HOUSING, FRONT HOUSING AND REFRACTOR ARE ONE-PIECE INJECTION MOLDED POLYCARBONATE, GASKETED, RNP BALLAST, PORCELAIN SOCKET, INTEGRAL PHOTOCELL CONTROL, UL LISTED FOR WET LOCATION.	LITHONIA LIGHTING TWS-35S-120-LPI-PE

REGISTERED PROFESSIONAL ENGINEER — TONY I. WAKIM — No. E10363 — Exp. 9/30/10 — ELECTRICAL — STATE OF CALIFORNIA

2/23/10

As-Built Drawing No.

LAST EDIT DATE: Feb 23, 2010 – 10:20am

K:/J CAD FILE: \\KJ\KJ-Root\KJ-Projects\Irvine\2006_Other\0687100_RCWD_Vail_Lake\Eng_and_Design\CAD\Pumps\35percent_DESIGN\0687100-E8.dwg

REVISIONS			
NUMBER	DATE	INITIALS	DESCRIPTION
1	11/17/09	TIW	CONFORMED SET
2	2/22/10	TIW	CONFORMED SET (REISSUED)

SCALE: AS NOTED
DESIGNED BY: WL/TEK
DRAWN BY: WL/JL
CHECKED BY: TIW
FILE NAME: 0687100-E8.dwg

Kennedy/Jenks Consultants
10920 VIA FRONTERA, SUITE 110
SAN DIEGO, CALIFORNIA 92127
K/J 0687100.00

APPROVED BY TONY I. WAKIM, P.E.
REGISTERED ENGINEER NO. E10363 DATE –

Rancho Water
Rancho California Water District
42135 Winchester Road
Temecula, CA 92590
Phone: (951) 296-6900 Fax: (951) 296-6863

RANCHO CALIFORNIA WATER DISTRICT
APPROVED
COREY WALLACE — 4/29/09
ENGINEERING MANAGER — DATE
APPROVALS

KEN COPE 4/29/09	CE 4/29/09	TW 4/29/09
CONTRACTS/DATE	OPERATIONS/DATE	MAINTENANCE/DATE

VAIL LAKE PUMP STATION (PROJECT NO. D1317)

SCHEDULES

SHEET E-8 OF 35 SHEETS

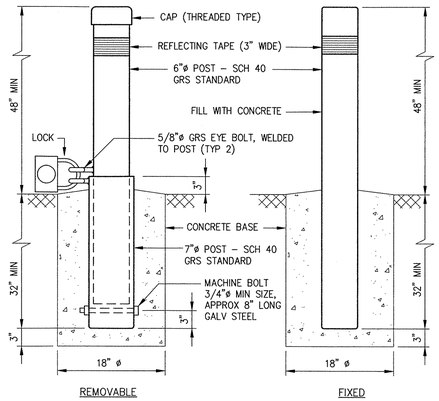

GUARD POST DETAIL

NTS — 12 / E-4, E-5

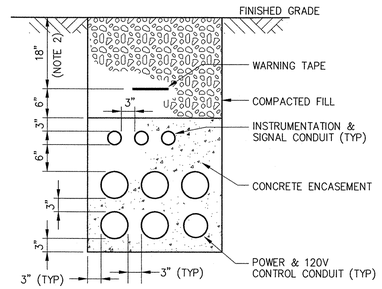

NOTES:
1. ALL DIMENSIONS ARE MINIMUMS.
2. ADD 6" FOR RUNS BENEATH ROADS.

TYPICAL UNDERGROUND DUCT SECTION

NTS — 8 / E-4

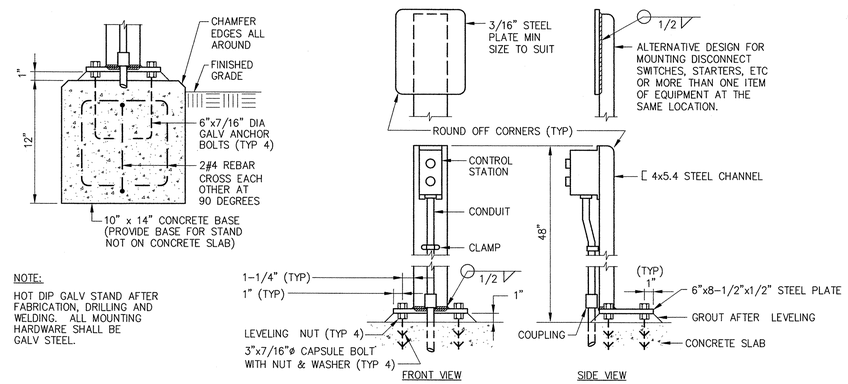

NOTE:
HOT DIP GALV STAND AFTER FABRICATION, DRILLING AND WELDING. ALL MOUNTING HARDWARE SHALL BE GALV STEEL.

EQUIPMENT MOUNTING STAND

NTS — 5 / E-5

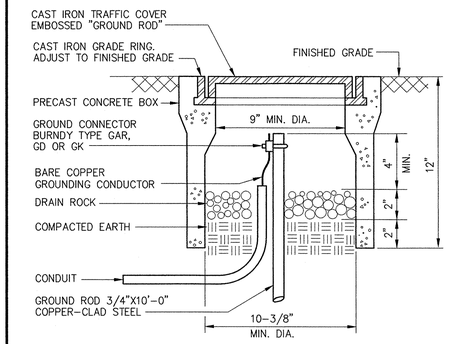

GROUND ROD & BOX INSTALLATION

NTS — 1 / E-5

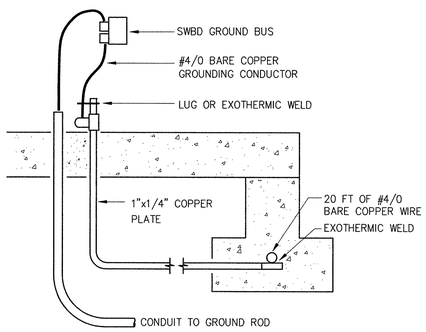

UFER GROUND CONNECTION

NTS — 13 / E-5

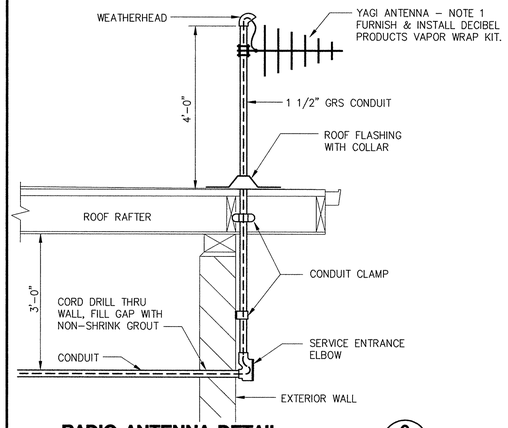

RADIO ANTENNA DETAIL

NTS — 9 / E-6

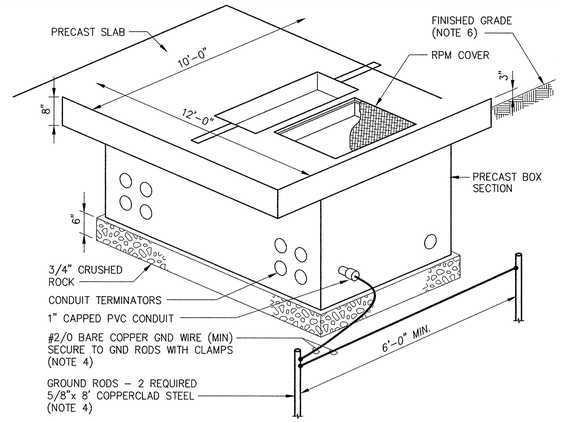

3 PHASE TRANSFORMER CONCRETE PAD AND BOX INSTALLATION

NTS — 6 / E-4, E-5

NOTES:
1. SLAB/BOX SHALL MEET THE REQUIREMENTS OF SOUTHERN CALIFORNIA EDISON COMPANY.
2. FOR SLAB/BOX STRUCTURAL DESIGN CRITERIA, SEE UGS 535.2, 535.3, 535.4 AND 535.5.
3. FOR LIST OF MATERIAL REQUIREMENTS AND NOTES, SEE UGS 535.6.
4. PROVIDE GND RODS, CLAMPS AND WIRE. SEE UGS 703 FOR APPROVED GROUNDING MATERIALS. GND WIRE SHALL BE A MINIMUM OF 2/0 BARE COPPER, UNLESS SPECIFIED OTHERWISE ON WORKING DRAWING. GND WIRE SHALL BE ROUTED THROUGH CAPPED ONE-INCH PVC CONDUIT AT EITHER END OF SLAB BOX. A MINIMUM OF THREE-FEET LENGTH OF GND WIRE SHALL BE PLACED IN SLAB BOX.
5. MASTIC SEALANT IS REQUIRED AT JOINTS.
6. TOP SURFACE OF SLAB/BOX SHALL BE SET THREE INCHES ABOVE FINISHED GRADE.
7. SEE UGS 500 FOR APPROVED MANUFACTURERS.
8. PROVIDE (2) 4"ø DRAIN HOLES ON PRECAST BOX FLOOR, ONE IN EACH DIAGONAL CORNER.

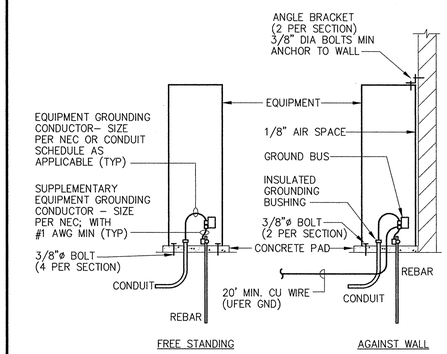

MAJOR EQUIPMENT ANCHORING

NTS — 2 / E-5

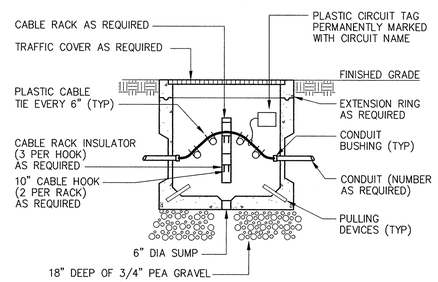

TYPICAL HANDHOLE INSTALLATION

NTS — 10 / E-5

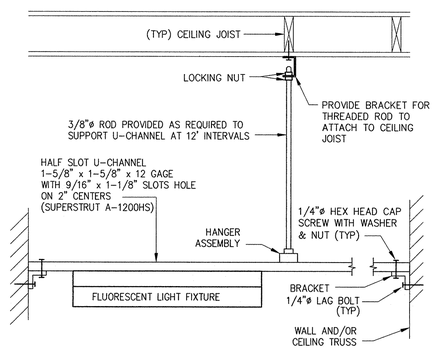

FIXTURE MOUNTING ON U-CHANNEL

NTS — 7 / E-6

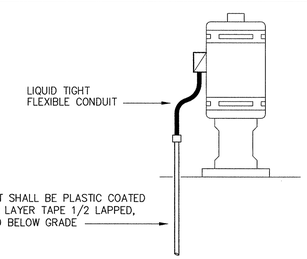

TYPICAL MOTOR CONNECTIONS

NTS — 3 / E-5

REGISTERED PROFESSIONAL ENGINEER TONY I. WAKIM No. E10363 Exp. 9/30/10 ELECTRICAL STATE OF CALIFORNIA
Tony I. Wakim
4/23/10

As-Built Drawing No.

REVISIONS			
NUMBER	DATE	INITIALS	DESCRIPTION
1	11/17/09	TIW	CONFORMED SET
2	2/22/10	TIW	CONFORMED SET (REISSUED)

SCALE: AS NOTED
DESIGNED BY: TEK/WL
DRAWN BY: WL/JL
CHECKED BY: TIW
FILE NAME: 0687100-E9.dwg

Kennedy/Jenks Consultants
10920 VIA FRONTERA, SUITE 110
SAN DIEGO, CALIFORNIA 92127
K/J 0687100.00

APPROVED BY TONY I. WAKIM, P.E.
REGISTERED ENGINEER NO. E10363 DATE –

Rancho Water
Rancho California Water District
42135 Winchester Road
Temecula, CA 92590
Phone: (951) 296-6900 Fax: (951) 296-6863

RANCHO CALIFORNIA WATER DISTRICT
APPROVED
COREY WALLACE — ENGINEERING MANAGER — 4/29/09 DATE
APPROVALS

KEN COPE 4/29/09	CE 4/29/09	TW 4/29/09
CONTRACTS/DATE	OPERATIONS/DATE	MAINTENANCE/DATE

VAIL LAKE PUMP STATION (PROJECT NO. D1317)

DETAILS

SHEET E-9 OF 35 SHEETS

K/J CAD FILE: \\KJ\KJ-Root\KJ-Projects\Irvine\2006_Other\0687100_RCWD_Vail_Lake\Eng_and_Design\CAD\Pumps\95percent_DESIGN\0687100-E9.dwg LAST EDIT DATE: Feb 23, 2010 – 10:25am

INSTRUMENT SYMBOL IDENTIFIERS

J-3 J-4, J-5
J-1
J-2
J-6

J-1: IDENTIFICATION LETTERS (SEE TABLE BELOW)
J-2: LOOP NUMBER
J-3: VENDOR DESIGNATOR (NOTE 3)
J-4: FUNCTION BLOCK (SEE TABLE BELOW)
J-5: PANEL NUMBER
J-6: HANDSWITCH DESIGNATOR (SEE BELOW)

	FIRST LETTER		SUCCEEDING LETTERS		
	MEASURED OR INITIATING VARIABLE	MODIFIER	READOUT OR PASSIVE FUNCTION	OUTPUT FUNCTION	MODIFIER
A	ANALYSIS		ALARM		
B	BURNER, COMBUSTION		USER'S CHOICE	USER'S CHOICE	USER'S CHOICE
C	USER'S CHOICE			CONTROL	CLOSED
D	DENSITY	DIFFERENTIAL	DAMPER		
E	VOLTAGE		SENSOR (PRIMARY ELEMENT)		
F	FLOW RATE	RATIO (FRACTION)			
G	USER'S CHOICE		GLASS, VIEWING DEVICE		
H	HAND				HIGH
I	CURRENT (ELECTRICAL)		INDICATE		
J	POWER	SCAN			
K	TIME, TIME SCHEDULE	TIME RATE OF CHANGE		CONTROL STATION	
L	LEVEL		LIGHT		LOW
M	MOISTURE	MOMENTARY			MIDDLE, INTERMEDIATE
N	USER'S CHOICE		USER'S CHOICE	USER'S CHOICE	USER'S CHOICE
O	USER'S CHOICE		ORIFICE, RESTRICTION		OPEN
P	PRESSURE, VACUUM		POINT (TEST) CONNECTION		
Q	QUANTITY	INTEGRATE, TOTALIZE			
R	RADIATION		RECORD		
S	SPEED, FREQUENCY	SAFETY	SWITCH		
T	TEMPERATURE			TRANSMIT	
U	MULTI VARIABLE		MULTIFUNCTION	MULTIFUNCTION	MULTIFUNCTION
V	VIBRATION, MECHANICAL ANALYSIS			VALVE, DAMPER, OR LOUVER	
W	WEIGHT, FORCE		WELL		
X	UNCLASSIFIED	X AXIS	UNCLASSIFIED	UNCLASSIFIED	UNCLASSIFIED
Y	EVENT, STATE, PRESENCE	Y AXIS		RELAY, COMPUTE, CONVERT	
Z	POSITION, DIMENSION	Z AXIS		DRIVER, ACTUATOR, UNCLASSIFIED FINAL CONTROL ELEMENT	

GENERAL INSTRUMENT OR FUNCTION SYMBOLS	FIELD MOUNTED	PRIMARY LOCATION ACCESSIBLE TO OPERATOR	AUXILIARY LOCATION ACCESSIBLE TO OPERATOR	NORMALLY INACCESSIBLE OR BEHIND THE PANEL
DISCRETE INSTRUMENTS				
SHARED DISPLAY, SHARED CONTROL				
COMPUTER FUNCTION				
PROGRAMMABLE LOGIC CONTROL				

J-4 FUNCTION BLOCK DESIGNATORS

- SUMMING
- DIFFERENCE
- INTEGRAL
- DERIVATIVE
- MULTIPLYING
- DIVIDING
- CONVERT:
- ROOT EXTRACTION
- SQUARE ROOT
- EXPONENTIAL
- HIGH SELECTING
- LOW SELECTING
- BIAS
- NONLINEAR OR UNSPECIFIED FUNCTION

* E – VOLTAGE
I – CURRENT
P – PNEUMATIC
A – ANALOG
B – BINARY
H – HYDRAULIC
O – ELECTROMAGNETIC, SONIC
R – RESISTANCE (ELECT)
D – DIGITAL

J-6 HANDSWITCH DESIGNATORS

HOA	HAND–OFF–AUTO	LR	LOCAL–REMOTE
HOR	HAND–OFF–REMOTE	OC	OPEN–CLOSE
F–R	FORWARD–REVERSE	OCA	OPEN–CLOSE–AUTO
1–0	ON–OFF		

INSTRUMENT SERVICES

AS — INSTRUMENT AIR SUPPLY (NOTE 4)
ES — 120 VAC ELECTRICAL SERVICE (DIFFERENT VOLTAGES ARE SPECIFICALLY NOTED)

PLC INPUT/OUTPUT

- DISCRETE INPUT
- ANALOG INPUT
- DISCRETE OUTPUT
- ANALOG OUTPUT

FLOW PRIMARY ELEMENTS

- ORIFICE PLATE
- SINGLE PORT PITOT TUBE OR PITOT–VENTURI TUBE
- VENTURI TUBE
- AVERAGING PITOT TUBE
- FLUME
- WEIR
- TURBINE OR PROPELLER–TYPE PRIMARY ELEMENT
- THERMAL MASS FLOWMETER
- POSITIVE DISPLACEMENT TYPE FLOW TOTALIZING INDICATOR
- VORTEX SENSOR
- TARGET TYPE SENSOR
- FLOW NOZZLE
- MAGNETIC FLOWMETER
- SONIC FLOWMETER
- ROTAMETER
- ROTAMETER WITH INTEGRAL VALVE

LINES

- MAIN PROCESS
- SECONDARY PROCESS
- I–2/A — REFERENCES LEAVING SHEET; LINE CONTINUATION; TO DRAWING REFERENCE
- A/I–3 — REFERENCES ENTERING SHEET; FROM DRAWING REFERENCE; LINE CONTINUATION
- 24" BW — PIPE SYSTEM; PIPE SIZE IN INCHES
- ELECTRICAL SIGNAL
- SOFTWARE OR DATALINK
- PNEUMATIC
- HYDRAULIC
- CAPILLARY TUBE
- ELECTROMAGNETIC OR SONIC (GUIDED)

MECHANICAL — OR — ELECTRICAL
CONNECTED
NOT CONNECTED

VALVES

- GATE VALVE
- GLOBE VALVE
- PLUG VALVE
- CHECK VALVE
- PINCH VALVE
- DIAPHRAGM VALVE
- BUTTERFLY VALVE
- BALL VALVE
- NEEDLE VALVE
- PLUG (COCK)
- PRESSURE REDUCING REGULATING VALVE, SELF–CONTAINED
- BACK PRESSURE REGULATING VALVE, SELF–CONTAINED
- PRESSURE REDUCING REGULATOR WITH EXTERNAL PRESSURE TAP
- 3–WAY VALVE
- 4–WAY VALVE
- ANGLE VALVE
- PRESSURE RELIEF VALVE
- *FC = FAIL CLOSED LC = LOCKED CLOSED; FO = FAIL OPEN LO = LOCKED OPEN
- CLOSED DURING NORMAL OPERATION
- SHADING INDICATES PORT TO BE CLOSED DURING NORMAL OPERATION. DOT INDICATES PORT TO BE CLOSED DURING ALTERNATE OPERATION.

VALVE OPERATORS

- DIAPHRAGM
- DIAPHRAGM PRESSURE BALANCED
- MOTOR
- CYLINDER OPERATOR
- SOLENOID
- SOLENOID VALVE

TYPICAL CONNECTION

- IN–LINE DEVICE
- DIRECT CONNECTION TO PROCESS
- TEMPERATURE ELEMENT WITH WELL
- RADIATION OR SONIC SENSING
- FILLED SYSTEM, DIAPHRAGM SEAL CONNECTION

MISCELLANEOUS

- FLANGE
- UNION
- Y STRAINER
- FLOW STRAIGHTENING VANE
- TEE
- SCREWED CAP
- WELDED CAP
- BLIND FLANGE
- REDUCER
- HB — HOSE BIBB CONNECTION
- DIAPHRAGM SEAL
- RUPTURE DISK, PRESSURE
- RUPTURE DISK, VACUUM
- PURGE
- DRAIN
- THERMOMETER WELL
- I 3 — INTERLOCK. NUMBER IS THE CROSS REFERENCE TO A SPECIFIC ELEMENTARY DIAGRAM OR TO A SPECIFIC CONTROL STRATEGY DESCRIBED IN THE SPECS
- EXPANSION JOINT
- FLEXIBLE COUPLING
- FLANGED COUPLING ADAPTER
- SLUICE GATE OR SLIDE GATE
- * AV – AIR VALVE; F – FILTER; T – TRAP; FH – FIRE HYDRANT
- WATER LINE
- GRAVITY FLOW
- AIR RELIEF VALVE
- AIR RELEASE
- LEVEL PROBE
- CHEMICAL DIFFUSER
- STATIC MIXER
- CALIBRATION CYLINDER
- PULSATION DAMPER
- EDUCTOR/INJECTOR

EQUIPMENT

- MIXER
- VERTICAL TURBINE PUMP
- SUBMERSIBLE PUMP
- PUMP BLOWER
- PUMP
- METERING PUMP
- PUMP PROGRESSIVE CAVITY
- ROTARY PUMP
- PRS PUMP

NOTES:

1. THIS IS A GENERALIZED LEGEND SHEET. THIS CONTRACT MAY NOT USE ALL INFORMATION SHOWN.
2. INFORMATION SHOWN MAY NOT BE ALL INCLUSIVE. SEE ALSO ISA S5.1, S5.3 AND S7.3.
3. INSTRUMENTS MARKED WITH AN ASTERISK ARE FURNISHED WITH THE EQUIPMENT.
4. REFER TO ISA RP7.7 FOR INSTRUMENT AIR QUALITY STANDARDS.

REGISTERED PROFESSIONAL ENGINEER TONY L WAKIM No. 7021 Exp. 12/31/11 CONTROL SYSTEMS STATE OF CALIFORNIA
2/23/10

As-Built Drawing No.

REVISIONS			
NUMBER	DATE	INITIALS	DESCRIPTION
1	11/17/09	TIW	CONFORMED SET
2	2/22/10	TIW	CONFORMED SET (REISSUED)

SCALE: AS NOTED
DESIGNED BY: TEK
DRAWN BY: JL
CHECKED BY: TIW
FILE NAME: 0687100-I1.dwg

Kennedy/Jenks Consultants
10920 VIA FRONTERA, SUITE 110
SAN DIEGO, CALIFORNIA 92127
K/J 0687100.00

APPROVED BY TONY I. WAKIM, P.E.
REGISTERED ENGINEER NO. CS 7021 DATE –

Rancho Water
Rancho California Water District
42135 Winchester Road
Temecula, CA 92590
Phone: (951) 296-6900 Fax: (951) 296-6863

RANCHO CALIFORNIA WATER DISTRICT
APPROVED
COREY WALLACE — ENGINEERING MANAGER — 4/29/09 DATE
APPROVALS

KEN COPE 4/29/09	CE 4/29/09	TW 4/29/09
CONTRACTS/DATE	OPERATIONS/DATE	MAINTENANCE/DATE

VAIL LAKE PUMP STATION (PROJECT NO. D1317)

PROCESS AND INSTRUMENTATION SYMBOLS

SHEET I–1 OF 35 SHEETS

K/J CAD FILE: \\KJ\KJ-Root\KJ-Projects\Irvine\2006_Other\0687100_RCWD_Vail_Lake\Eng_and_Design\CAD\Pumps\95percent_DESIGN\0687100-I1.dwg LAST EDIT DATE: Feb 23, 2010 – 10:25am

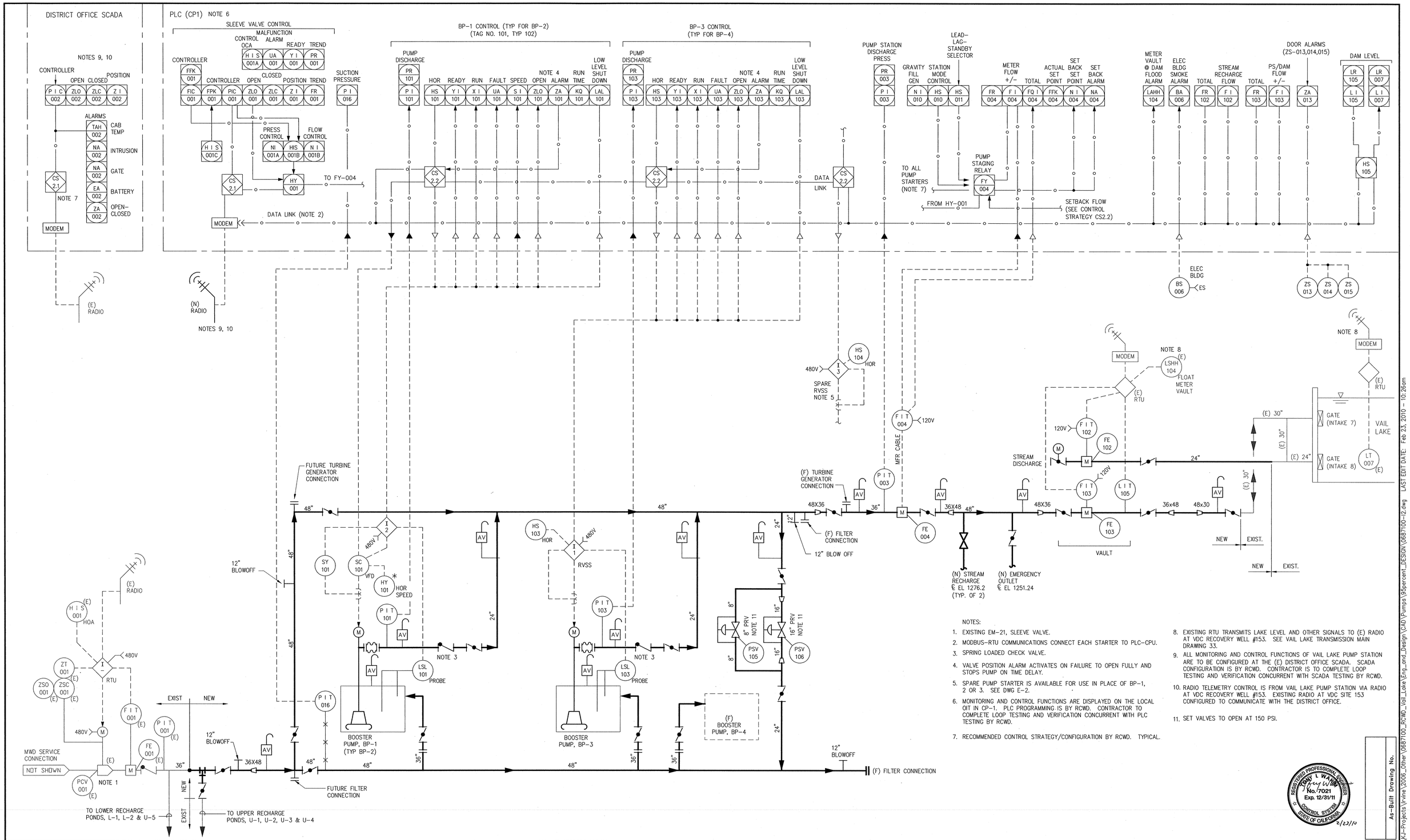

NOTES:

1. EXISTING EM-21, SLEEVE VALVE.
2. MODBUS-RTU COMMUNICATIONS CONNECT EACH STARTER TO PLC-CPU.
3. SPRING LOADED CHECK VALVE.
4. VALVE POSITION ALARM ACTIVATES ON FAILURE TO OPEN FULLY AND STOPS PUMP ON TIME DELAY.
5. SPARE PUMP STARTER IS AVAILABLE FOR USE IN PLACE OF BP-1, 2 OR 3. SEE DWG E-2.
6. MONITORING AND CONTROL FUNCTIONS ARE DISPLAYED ON THE LOCAL OIT IN CP-1. PLC PROGRAMMING IS BY RCWD. CONTRACTOR TO COMPLETE LOOP TESTING AND VERIFICATION CONCURRENT WITH PLC TESTING BY RCWD.
7. RECOMMENDED CONTROL STRATEGY/CONFIGURATION BY RCWD. TYPICAL.
8. EXISTING RTU TRANSMITS LAKE LEVEL AND OTHER SIGNALS TO (E) RADIO AT VDC RECOVERY WELL #153. SEE VAIL LAKE TRANSMISSION MAIN DRAWING 33.
9. ALL MONITORING AND CONTROL FUNCTIONS OF VAIL LAKE PUMP STATION ARE TO BE CONFIGURED AT THE (E) DISTRICT OFFICE SCADA. SCADA CONFIGURATION IS BY RCWD. CONTRACTOR IS TO COMPLETE LOOP TESTING AND VERIFICATION CONCURRENT WITH SCADA TESTING BY RCWD.
10. RADIO TELEMETRY CONTROL IS FROM VAIL LAKE PUMP STATION VIA RADIO AT VDC RECOVERY WELL #153. EXISTING RADIO AT VDC SITE 153 CONFIGURED TO COMMUNICATE WITH THE DISTRICT OFFICE.
11. SET VALVES TO OPEN AT 150 PSI.

REGISTERED PROFESSIONAL ENGINEER TONY L. WAKIM No. 7021 Exp. 12/31/11 CONTROL SYSTEM STATE OF CALIFORNIA 2/23/10

As-Built Drawing No.

REVISIONS			
NUMBER	DATE	INITIALS	DESCRIPTION
1	11/17/09	TIW	CONFORMED SET
2	2/22/10	TIW	CONFORMED SET (REISSUED)

SCALE: AS NOTED
DESIGNED BY: TEK
DRAWN BY: JL/WL
CHECKED BY: TIW
FILE NAME: 0687100-I2.dwg

Kennedy/Jenks Consultants
10920 VIA FRONTERA, SUITE 110
SAN DIEGO, CALIFORNIA 92127
K/J 0687100.00

APPROVED BY TONY I. WAKIM, P.E.
REGISTERED ENGINEER NO. CS 7021 DATE –

Rancho Water
Rancho California Water District
42135 Winchester Road
Temecula, CA 92590
Phone: (951) 296-6900 Fax: (951) 296-6863

RANCHO CALIFORNIA WATER DISTRICT
APPROVED
COREY WALLACE — ENGINEERING MANAGER — 4/29/09 DATE
APPROVALS

KEN COPE 4/29/09	CE 4/29/09	TW 4/29/09
CONTRACTS/DATE	OPERATIONS/DATE	MAINTENANCE/DATE

VAIL LAKE PUMP STATION
(PROJECT NO. D1317)

PROCESS AND INSTRUMENTATION DIAGRAM BOOSTER PUMPS

SHEET I-2 OF 35 SHEETS

K/J CAD FILE: \\KJ\KJ-Root\KJ-Projects\Irvine\2006_Other\0687100_RCWD_Vail_Lake\Eng_and_Design\CAD\Pumps\95percent_DESIGN\0687100-I2.dwg LAST EDIT DATE: Feb 23, 2010 - 10:26am

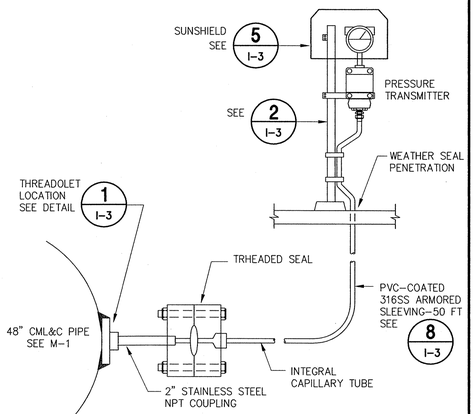

PRESSURE TRANSMITTER THREAD SEAL SYSTEM (PIT-016)

NTS — E-5, 7 / I-3

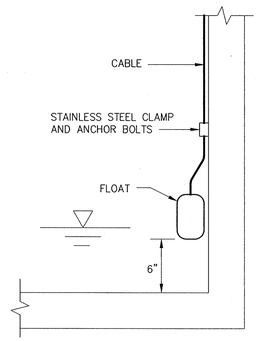

FLOAT LEVEL DETAIL

NTS — 4 / E-6

	LIQUID	STEAM, VAPOR OR SLURRY	AIR OR GAS
FLOW, PRESS OR D/P	PREFERRED / ALTERNATE	ALTERNATE / PREFERRED	PREFERRED / ALTERNATE / ALTERNATE
ANALYSIS	LIQUID OR SLURRY	STEAM, VAPOR, AIR OR GAS	
	ALTERNATE / PREFERRED	PREFERRED / ALTERNATE / ALTERNATE	
TEMPERATURE	ALL FLUIDS		
	NOTE: THIS ORIENTATION FOR TEMPERATURE INSTRUMENTS WILL NOT APPLY IF THE PIPE DIAMETER IS SMALL AND REQUIRES A TEE OR ELBOW TO BE USED.	PREFERRED / ALTERNATE / ALTERNATE	

SIGNAL TAP ORIENTATION LEGEND

NTS — 1 / I 3

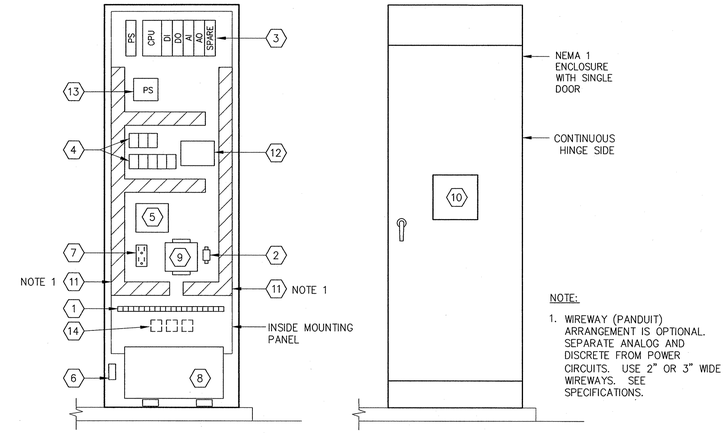

NOTE:

1. WIREWAY (PANDUIT) ARRANGEMENT IS OPTIONAL. SEPARATE ANALOG AND DISCRETE FROM POWER CIRCUITS. USE 2" OR 3" WIDE WIREWAYS. SEE SPECIFICATIONS.

INTERIOR VIEW — FRONT DOOR NOT SHOWN FOR CLARITY

EXTERIOR VIEW

CONTROL PANEL 1 (CP1) ELEVATION

SCALE: 3/4" = 1'-0" — 7 / E-3

COMPONENT SCHEDULE	
NO.	DESCRIPTION
1	DIN RAIL TERMINALS – FIELD WIRING
2	RADIO SURGE ARRESTER
3	PROGRAMMABLE LOGIC CONTROLLER
4	PUMP LOGIC START RELAYS (TYP 5)
5	UPS BYPASS CONTROL
6	INTRUSION (DOOR SWITCH)
7	RECEPTACLE (CONVENIENCE + RADIO) – DUPLEX
8	UNINTERRUPTIBLE POWER SUPPLY (UPS)
9	SPREAD SPECTRUM RADIO
10	OPERATOR INTERFACE TERMINAL – DOOR MOUNTED
11	PANDUIT TYPICAL – NOTE 1
12	LOOP POWER SUPPLY (24 VDC)
13	POWER CONVERTER (120VAC/24VDC, 1.5A) – (RADIO)
14	LINE PROTECTION UNIT (LPU) – TYP. 3

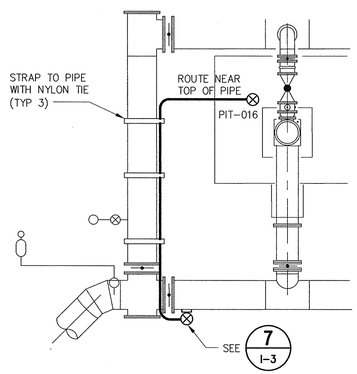

CAPILLARY TUBE PROPOSED ROUTING

NTS — 8 / I-3

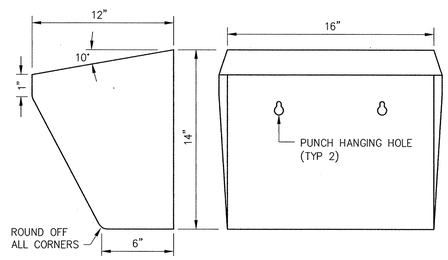

SIDE VIEW **FRONT VIEW**

NOTES:

1. MATERIAL SHALL BE 14 GAUGE ALUMINUM SHEET.
2. MINIMUM SIZE. SIZE TO SUIT IF EQUIPMENT/DEVICE ARE LARGER.

TYPICAL SUNSHIELD INSTALLATION

NTS — 5 / E-5

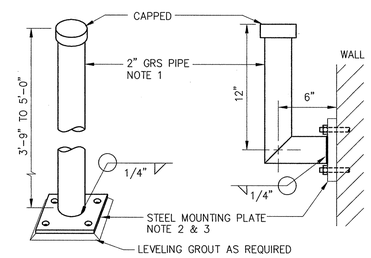

FLOOR STAND **WALL MOUNT**

NOTES:

1. HOT DIP GALVANIZE AFTER FABRICATION.
2. TYP. MOUNTING PLATE: 6" x 6" x 3/16" WITH FOUR 5/8" HOLES.
3. PROVIDE FOUR 2" x 9/16" CAPSULE ANCHOR BOLTS.
4. PROVIDE SUPPORT AS REQUIRED BY RCWD.

INSTRUMENT MOUNTING DETAIL

NTS — 2 / I-3

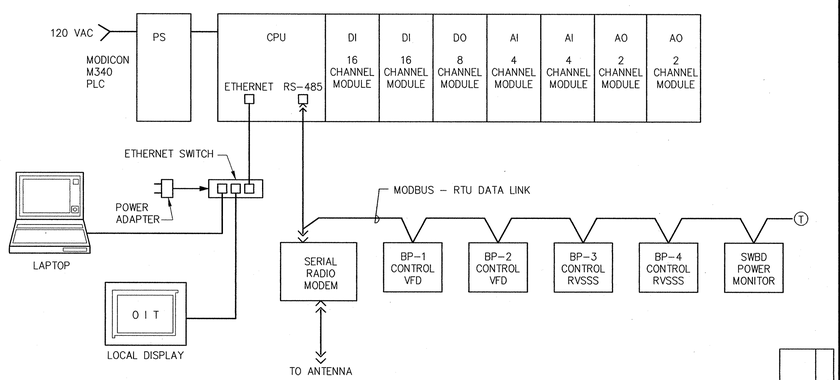

PLC CONNECTION DIAGRAM

NTS

(T) – TERMINATOR, WHERE REQUIRED

NOTE:
COORDINATE TANK FLANGE THROAT SIZE WITH PROBE DIAMETER.

PROBE AND PROBE HOLDER

NTS — 6 / E-5

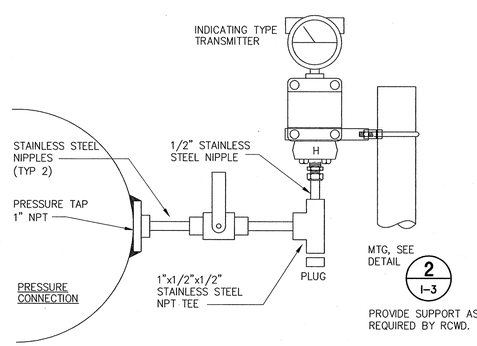

TYPICAL PRESSURE TRANSMITTER PIPE MOUNTING

NTS — E-5, 3 / E-6

REVISIONS			
NUMBER	DATE	INITIALS	DESCRIPTION
1	11/17/09	TIW	CONFORMED SET
2	2/22/10	TIW	CONFORMED SET (REISSUED)

SCALE: AS NOTED
DESIGNED BY: WL/GK
DRAWN BY: WL/JL
CHECKED BY: TIW
FILE NAME: 0687100-I3.dwg

Kennedy/Jenks Consultants
10920 VIA FRONTERA, SUITE 110
SAN DIEGO, CALIFORNIA 92127
K/J 0687100.00

APPROVED BY TONY I. WAKIM, P.E.
REGISTERED ENGINEER NO. CS 7021 DATE –

Rancho Water
Rancho California Water District
42135 Winchester Road
Temecula, CA 92590
Phone: (951) 296-6900 Fax: (951) 296-6863

RANCHO CALIFORNIA WATER DISTRICT
APPROVED
COREY WALLACE — 4/29/09
ENGINEERING MANAGER — DATE
APPROVALS

KEN COPE 4/29/09	CE 4/29/09	TW 4/29/09
CONTRACTS/DATE	OPERATIONS/DATE	MAINTENANCE/DATE

VAIL LAKE PUMP STATION (PROJECT NO. D1317)

INSTRUMENTATION DETAILS

SHEET I-3 OF 35 SHEETS

REGISTERED PROFESSIONAL ENGINEER TONY I. WAKIM No. 7021 Exp. 12/31/11 CONTROL SYSTEMS STATE OF CALIFORNIA 2/23/10

As-Built Drawing No.

K/J CAD FILE: \\KJ\KJ-Root\Kj-Projects\Irvine\20005_Other\0687100_RCWD_Vail_Lake\Eng_and_Design\CAD\Pumps\95percent_DESIGN\0687100-I3.dwg LAST EDIT DATE: Feb 23, 2010 – 10:26am

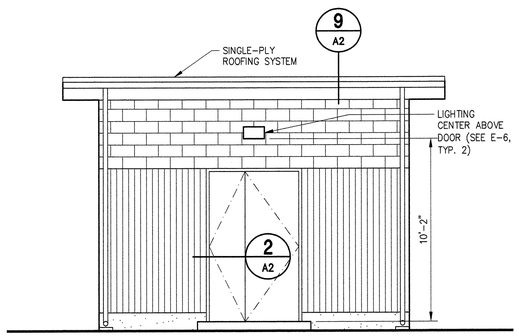

WEST ELEVATION
SCALE: 1/4" = 1'-0"

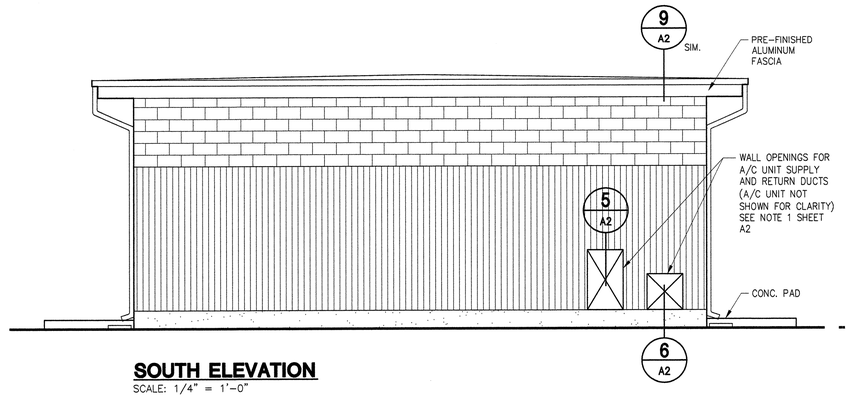

SOUTH ELEVATION
SCALE: 1/4" = 1'-0"

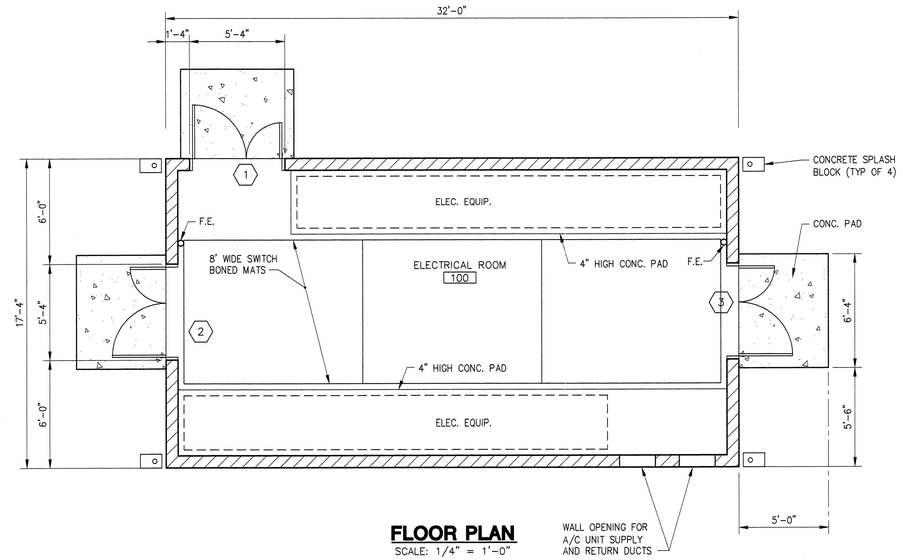

FLOOR PLAN
SCALE: 1/4" = 1'-0"

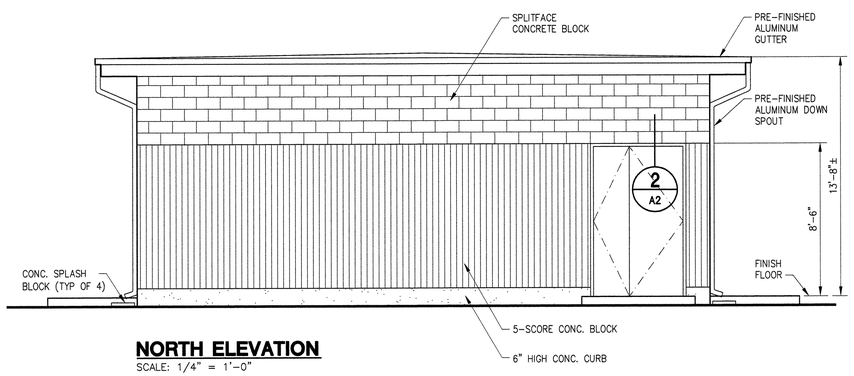

NORTH ELEVATION
SCALE: 1/4" = 1'-0"

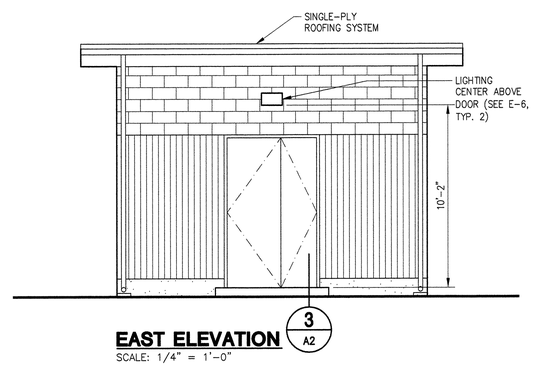

EAST ELEVATION
SCALE: 1/4" = 1'-0"

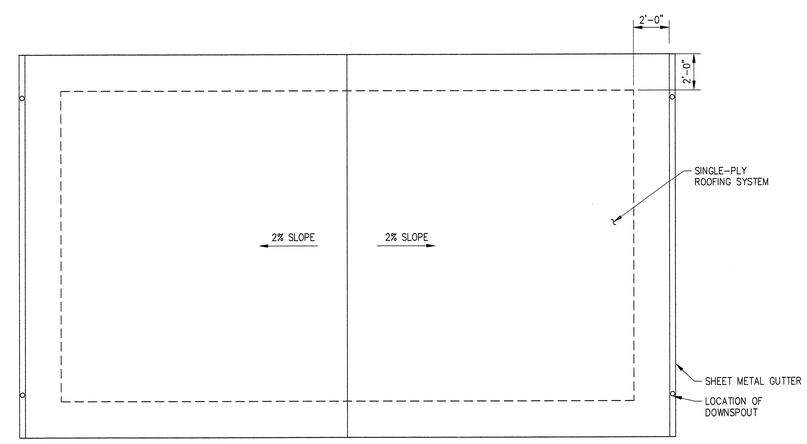

ROOF PLAN
SCALE: 1/4" = 1'-0"

2 0 2 4 6 8 10
SCALE: 1/4"=1'-0"

LICENSED ARCHITECT
WILLIAM G. RAMROTH
C-9594
REN. 7/31/11
STATE OF CALIFORNIA
11/20/09

As-Built Drawing No.

REVISIONS			
NUMBER	DATE	INITIALS	DESCRIPTION
1	11/17/09	WGR	CONFORMED SET

SCALE: AS NOTED
DESIGNED BY: WGR
DRAWN BY: CADNET
CHECKED BY: RBT
FILE NAME: 0687100-A1.dwg

Kennedy/Jenks Consultants
10920 VIA FRONTERA, SUITE 110
SAN DIEGO, CALIFORNIA 92127
K/J 0687100.00

APPROVED BY WILLIAM G. RAMROTH
REGISTERED ENGINEER NO. C-9594 DATE -

Rancho Water
Rancho California Water District
42135 Winchester Road
Temecula, CA 92590
Phone: (951) 296-6900 Fax: (951) 296-6863

RANCHO CALIFORNIA WATER DISTRICT
APPROVED
COREY WALLACE — ENGINEERING MANAGER
4/29/09 — DATE
APPROVALS

KEN COPE 4/29/09	CE 4/29/09	TW 4/29/09
CONTRACTS/DATE	OPERATIONS/DATE	MAINTENANCE/DATE

VAIL LAKE PUMP STATION
(PROJECT NO. D1317)

FLOOR PLAN, ROOF PLAN AND ELEVATIONS

SHEET
A-1
OF 35 SHEETS

K/J CAD FILE: \\KJ\KJ-Root\KJ-Projects\Irvine\2006_Other\0687100_RCWD_Vail_Lake\Eng_and_Design\CAD\Pumps\95percent_DESIGN\0687100-A1.dwg
EDIT DATE: Nov 20, 2009 - 9:29am

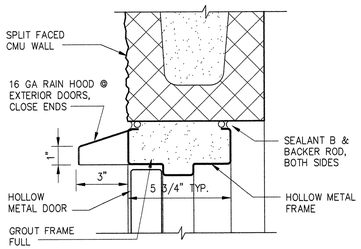

DOOR HEAD DETAIL (1 / A2)
SCALE: 3" = 1'-0"

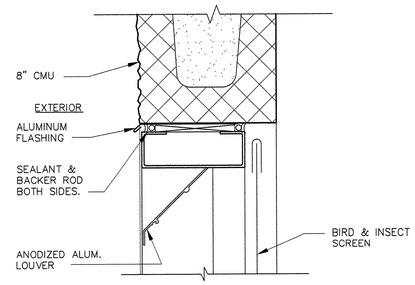

LOUVER HEAD DETAIL (JAMB SIMILAR) (5 / A2)
SCALE: 3" = 1'-0"

(7 / A2)

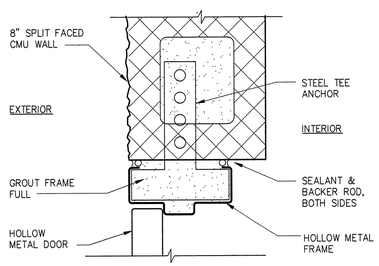

DOOR JAMB DETAIL (2 / A2)
SCALE: 3" = 1'-0"

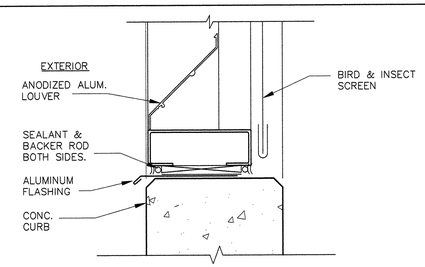

LOUVER SILL DETAIL (6 / A2)
SCALE: 3" = 1'-0"

(8 / A2)

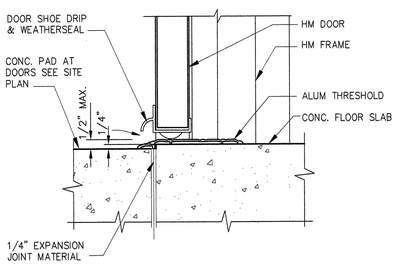

DOOR SILL DETAIL (3 / A2)
SCALE: 3" = 1'-0"

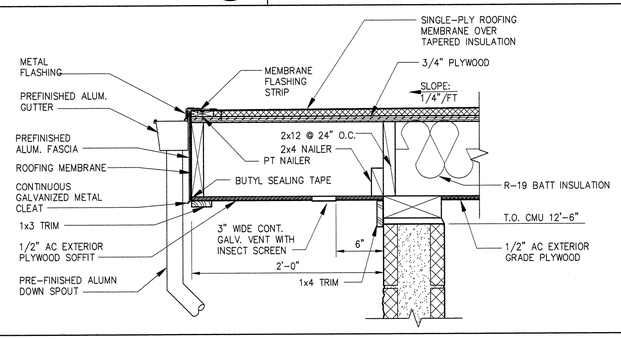

ROOF EAVE DETAIL (9 / A2)
SCALE: 1-1/2" = 1'-0"

(10 / A2)

DOOR SCHEDULE

OPENING		DOOR		FRAME				ASSEMBLY		REMARKS
NO.	DOOR SIZE WIDTH x HEIGHT	TYPE	MAT	MAT	DETAILS (SEE NOTE 1 BELOW) HEAD	JAMB	SILL	HARD-WARE GROUP	FIRE RATING	
1	PR 5'-0"x8'-4"	A	HM	HM	1 / –	2 / –	3 / –	1	–	
2	PR 5'-0"x8'-4"	A	HM	HM	1 / –	2 / –	3 / –	1	–	
3	PR 5'-0"x8'-4"	A	HM	HM	1 / –	2 / –	3 –	1	–	

DOOR TYPES

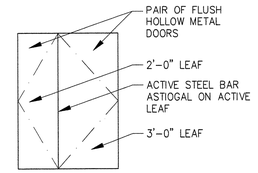

A

NOTES:

1. DOOR DETAILS ARE ON THIS SHEET UNLESS OTHERWISE NOTED.

ABBREVIATIONS:

R.O. = ROUGH OPENING IN CMU WALL

HM = HOLLOW METAL

FINISH SCHEDULE

ROOM		FLOOR	BASE	WALL		CEILING		CEILING HEIGHT	REMARKS
NO.	NAME OF ROOM OR SPACE			MATERIAL	FINISH	MATERIAL	FINISH		
100	ELECTRICAL ROOM	CONCRETE	CONCRETE	CMU	SEE NOTES	PLYWOOD	SEE NOTES	12'-8"±	

FINISH NOTES

1. PAINT ALL H.M. DOORS AND FRAMES, INTERIOR & EXTERIOR EXPOSED WOOD FRAMING AND TRIM, & EXPOSED GALVANIZED SHEET METAL PAINT SYSTEM (A) IN ACCORDANCE WITH SECTION 09900 OF THE SPECIFICATIONS.
2. SEAL ALL EXPOSED MASONRY & CONCRETE WITH WATER REPELLANT SEALER IN ACCORDANCE WITH SECTION 07190 OF THE SPECIFICATIONS.
3. PAINT ALL EQUIPMENT, PIPING, DUCTWORK, & CONDUIT IN ACCORDANCE WITH SECTION 09900 OF THE SPECIFICATIONS.
4. PAINT ALL EXPOSED WOOD TRIM, PLYWOOD AND OTHER WOOD SURFACE PAINT SYSTEM (A)

0 6" 1' 2'
1 1/2"=1'-0"

0 3" 6" 1'
3"=1'-0"

LICENSED ARCHITECT
WILLIAM G. RAMROTH
C-9594
REN. 7/31/11
STATE OF CALIFORNIA
11/20/09

As-Built Drawing No.

REVISIONS			
NUMBER	DATE	INITIALS	DESCRIPTION
1	11/17/09	WGR	CONFORMED SET

SCALE: AS NOTED
DESIGNED BY: WGR
DRAWN BY: CADNET
CHECKED BY: RBT
FILE NAME: 0687100-A2.dwg

Kennedy/Jenks Consultants
10920 VIA FRONTERA, SUITE 110
SAN DIEGO, CALIFORNIA 92127
K/J 0687100.00

APPROVED BY WILLIAM G. RAMROTH
REGISTERED ENGINEER NO. C-9594 DATE –

Rancho Water
Rancho California Water District
42135 Winchester Road
Temecula, CA 92590
Phone: (951) 296-6900 Fax: (951) 296-6863

RANCHO CALIFORNIA WATER DISTRICT
APPROVED
COREY WALLACE 4/29/09
ENGINEERING MANAGER DATE
APPROVALS

KEN COPE 4/29/09	CE 4/29/09	TW 4/29/09
CONTRACTS/DATE	OPERATIONS/DATE	MAINTENANCE/DATE

VAIL LAKE PUMP STATION
(PROJECT NO. D1317)

SCHEDULES AND DETAILS

SHEET A-2 OF 35 SHEETS

K/J CAD FILE: \ \KJ\KJ-Root\KJ-Projects\Irvine\2006_Other\0687100_RCWD_Vail_Lake\Eng_and_Design\CAD\Pumps\95percent_DESIGN\0687100-A2.dwg EDIT DATE: Nov 20, 2009 – 9:31am