BLACK & VEATCH
Building a world of difference.

FINAL

Rancho California Water District
W-34 Hydroelectric Power Generation Facility (Project No. D1571)

B&V Project 167668
B&V File 43.0100
July 26, 2010

To: Corey Wallace, P.E.
From: Kevin Davis, P.E.
Chuck Feild, P.E.

Subject: Pre-Design Evaluation Memorandum

This memorandum summarizes the results of the Pre-Design Evaluation performed by Black & Veatch for the WR-34 Hydroelectric Power Generation Facility in Temecula, California.

1.0 Introduction

The Rancho California Water District (District) owns and operates the WR-34 Turnout Facility (Turnout Facility) that is used to take raw water from the Metropolitan Water District of Southern California's (MWD) Pipeline No. 5 and discharge it to the Santa Margarita River. Water discharges are made in compliance with the Santa Margarita River Cooperative Water Resource Management Agreement between the District and the United States on behalf of Camp Pendleton. The Turnout Facility includes a single sleeve valve that is used to dissipate approximately 400 feet of excess head in the flow prior to discharge to the River. The purpose of the Pre-Design Evaluation is to provide a preliminary assessment of the technical and economic feasibility of incorporating a hydroelectric turbine-generator into the Turnout Facility to recover available head that is presently being dissipated by the sleeve valve.

2.0 Project Data Review and Site Reconnaissance

As part of the initial project evaluations, B&V obtained and reviewed the following project information.

- WR-34 Hydroelectric Power Feasibility Study, Kennedy/Jenks Consultants, June 2009.
- MWD Hydraulic Profile for Pipeline No. 5 at the WR-34 Turnout location.
- Site and area utility plans for water and sewer pipelines.
- Available as-built construction drawings for the Santa Margarita Outfall Project – Phase 1 and 2 developments.
- Santa Margarita River Cooperative Water Resource Management Agreement

Additionally, B&V project team members visited the Turnout Facility site and measured above-ground features and took photographs to document the existing construction and any improvements incorporated after Phase 1 and 2 developments.

3.0 Existing Conditions

This section summarizes the existing Turnout Facilities and operating conditions.

3.1 Turnout Facilities

The existing facilities are composed of a 16-inch turnout on Pipeline No. 5, and approximately 110 feet of buried 16-inch steel piping extending southward from the turnout to a MWD meter vault containing a 12-inch electromagnetic flow meter and a 12-inch check valve. A 16-inch

insulating joint is located on the piping immediately outside the meter vault on the south side, and this joint serves as the ownership boundary between MWD and District facilities. From the meter vault, the buried piping extends approximately 15 feet to the District's Flow Control Vault. This vault is a reinforced concrete structure located primarily below grade. The vault contains a 16-inch butterfly valve with a handwheel operator and a 10-inch Bailey Polyjet sleeve valve that discharges into a wet well for submergence. Discharges to the wet well flow through a 20-inch PVC gravity pipeline that extends from the south wall of the wet well to the Santa Margarita River. Access to the Flow Control Vault is through hatches in the top of the vault, just above grade.

Above-grade electrical and control facilities include a utility power center, antenna and a RTU. Sleeve valve discharge is controlled remotely using radio communications from the District's control center in Temecula.

The District recently modified the Flow Control Structure (at the Turnout Facility) to include potable water piping with a dechlorination system that can discharge into the wet well of the vault. This potable water supply serves as a backup water supply source to the Santa Margarita River in the event the raw water supply facilities are out of service. The dechlorination system is used for both the potable water and the raw water provided from MWD.

An existing site plan is provided in Figure 1 at the end of this memorandum.

3.2 Available Head at Pipeline No. 5.

The WR-34 turnout is located at Sta. 1594+20 on Pipeline No. 5, which is approximately 10 miles downstream from the Auld Valley Canal, the source of the water in Pipeline No. 5. Gravity flow conditions exist in Pipeline No. 5, therefore the elevation of the Hydraulic Grade Line (HGL) in Pipeline No. 5 is equal to the water surface elevation in the Auld Valley Canal, minus the head losses between the canal and the turnout location. Headlosses in Pipeline No. 5 are a function of discharge, with higher discharge conditions resulting in a lower HGL at the turnout location, and lower discharges resulting in a higher HGL. The following turnout HGL information is taken from the Pipeline No. 5 hydraulic profile.

Pipeline No. 5 HGL at WR-34 Turnout Location		
P5 Discharge Condition	**P5 Discharge**	**HGL Elevation**
Static	0 cfs	1479 ft
Design	290 cfs	1435 ft
Maximum	474 cfs	1360 ft

For purposes of this pre-design evaluation, the Pipeline No. 5 Design discharge condition is used, with a HGL elevation of 1435 ft at the turnout. Net head at the turbine will be equal to this HGL minus the turbine centerline elevation and headlosses in the turnout piping.

3.3 Turnout Flow Conditions.

Records of average daily turnout discharge for the period 2003 – 2009 were provided by the District and are considered to be representative of future discharge conditions. During this period, the discharge varied from a maximum of 16 cfs, which occurred on two days, to a minimum of 0 cfs, which occurred on several days. The flow duration curve of average daily flows is shown on the following figure. This curve provides the percentage of time during the period of flow records that the indicated discharge was equaled or exceeded.

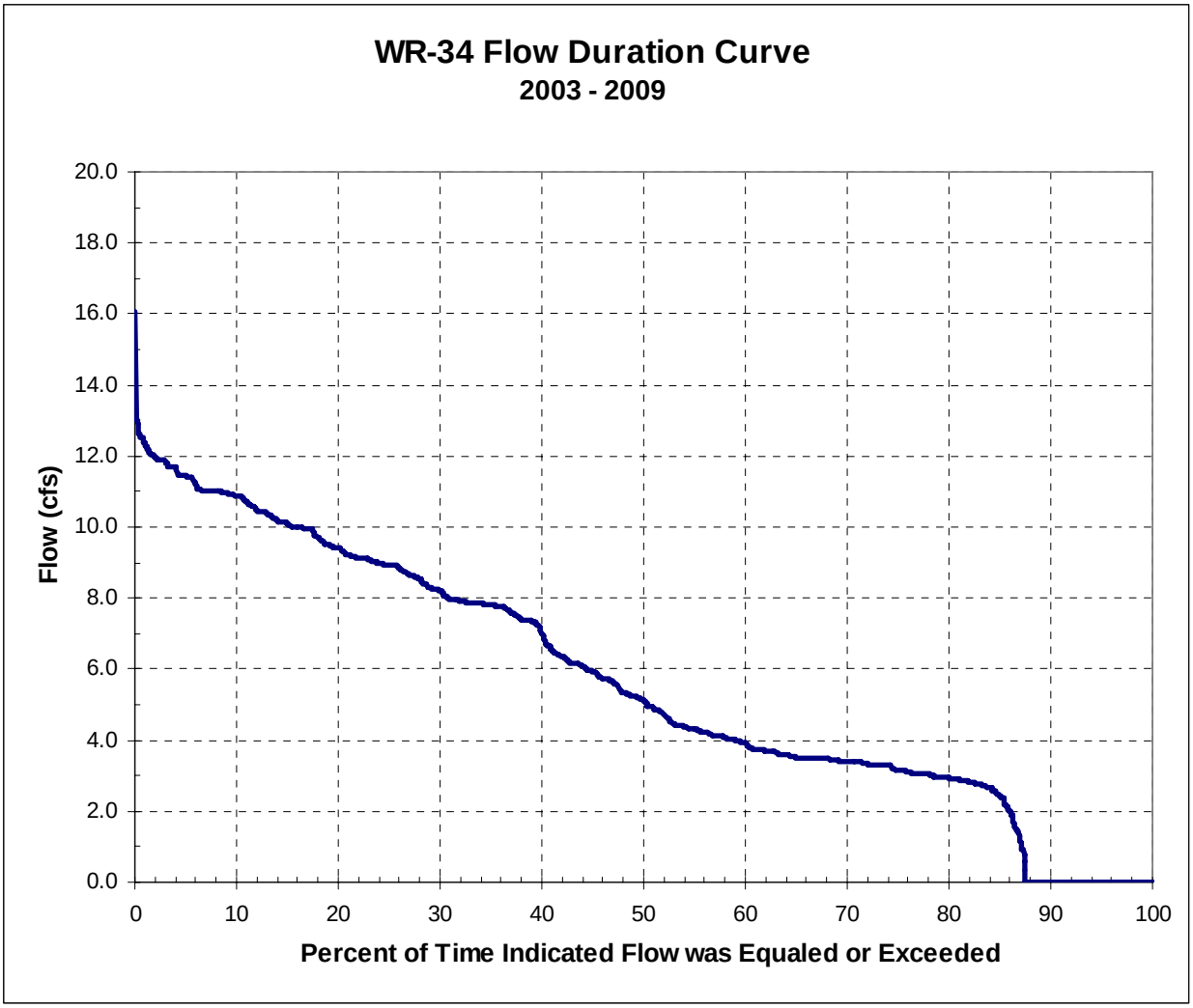

Average monthly discharge was found to vary from approximately 8 cfs in January to approximately 3 cfs in December, as shown on the chart below. During the period January through June, no noticeable trend is observed in the average monthly flow data. From July through December, average monthly discharge is seen to trend downward from about 7 cfs to about 3 cfs.

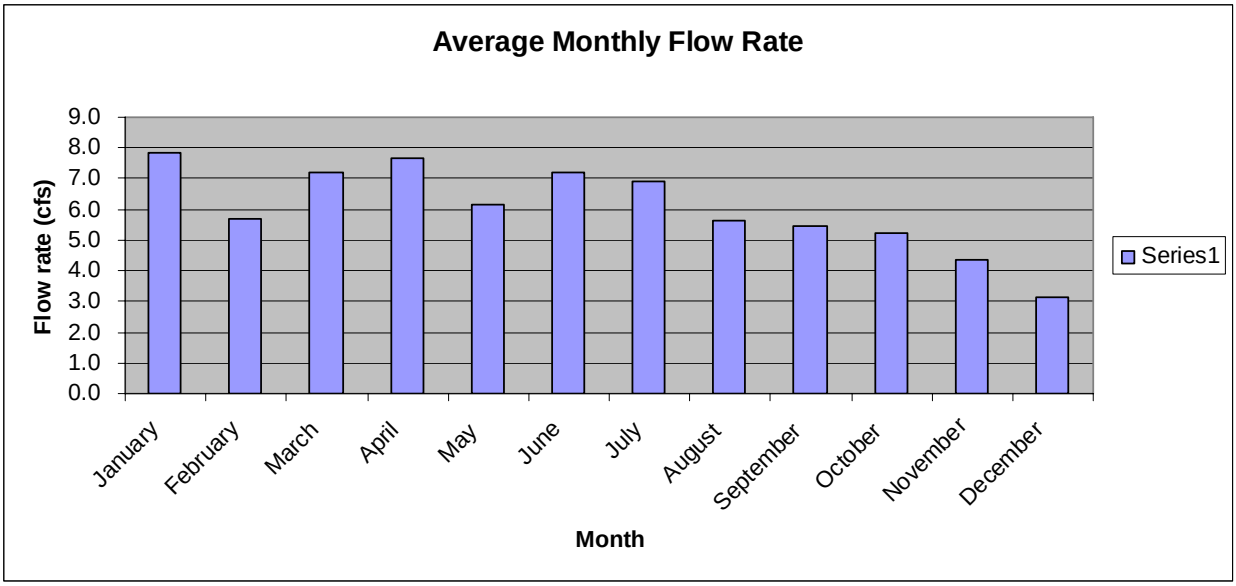

The required daily discharge made by the District to the Santa Margarita River through the WR-34 turnout is determined based on the provisions of the Cooperative Resource Management Agreement. This Agreement establishes required flows at USGS Gaging Station No. 110440000 on the Santa Margarita River near Temecula (known as "the Gorge") based on month of the year and hydrologic conditions including critically dry, below normal, above normal, and very wet.

In the past, the District discharged flow to the Santa Margarita River by providing a constant flow throughout the day. In order to maximize the power generation potential during the peak revenue periods, we have explored discharging higher flow rates for shorter durations. For instance, a required daily discharge of 5 cfs during a 24-hour period could also be accomplished by a discharge of 15 cfs for an 8-hour period, as these scenarios would result in the same volume of water released to the Santa Margarita River on a given day. This approach would have the advantage of being able to concentrate the discharge during on-peak electric periods when the electric rates to be paid to the District for hydroelectric generation are the highest, thus maximizing generation revenues. Based on the District's interpretation of the Agreement, it appears that this strategy will be in compliance with their obligations. This approach was used as the basis for determining turnout discharge and duration and for calculation of generation revenues.

4.0 Hydropower Facilities

Descriptions of the hydropower facilities considered in this evaluation are as follows.

4.1 Turbine-Generator

The following turbine types were considered for this evaluation.

Pelton Turbine. Information regarding pelton turbines was received from Canyon Hydro and Gilkes. Canyon Hydro is located in Deming, Washington and Gilkes, based in the United Kingdom, has regional facilities in Victoria, British Columbia Canada. Water-to-wire equipment packages were requested, with the package including the turbine, turbine inlet valve, induction generator, and controls/switchgear. Budgetary pricing was obtained for maximum turbine discharges of 10 cfs and 15 cfs to allow for a comparative evaluation of incremental costs and

generation benefits as turbine discharge capacity increases. The following budgetary pricing information was obtained.

Water-to-Wire Budgetary Pricing for Pelton Turbines				
Turbine Type	Maximum Discharge	Output	Budgetary Pricing – Canyon Hydro	Budgetary Pricing - Gilkes
Dual Nozzle Pelton	10 cfs	270 kW	$417,000	--
Dual Nozzle Pelton	15 cfs	390 kW	$574,000	$640,000

A pelton-type unit can be advantageous because it has a relatively high efficiency over a wide operating range of discharge, however since block loading is considered, this advantage would not necessarily be needed. The capability to regulate flow would still exist should the District decide to operate in this manner in the future. Additionally, a pelton-type unit would avoid waterhammer issues within the turnout piping or Pipeline No. 5 during a no load shutdown of the turbine (loss of grid power), since the discharge can be controlled with the needle valves to reduce discharge slowly, while water flow can be maintained by actuating the jet deflectors.

Pump-Turbine. Information regarding a pump-turbine was received from Canyon Hydro. Use of the term “pump-turbine” refers to the fact that a traditional pump casing is used for the turbine, as opposed to a custom manufactured turbine casing. The term does not correspond to a “reversible pump-turbine” of the type typically used in pumped-storage hydroelectric applications.

For this application, Canyon Hydro would use a pump-turbine as manufactured by Cornell Pump Company, of Portland, Oregon, and customize the unit to provide a water-to-wire package. This would involve incorporating an inlet reducer and discharge increaser, turbine inlet valve, hydraulic power unit, and switchgear/controls. For the given head conditions, maximum discharge is limited to 13.1 cfs. This data was the basis for Canyon Hydro’s budgetary pricing.

This type of turbine would operate as an unregulated unit, meaning flow regulation would not be possible. Actual discharge would be a function of available net head, in accordance with the pump-turbine performance (head vs. discharge) curve. As net head increases, unit discharge would increase, and the opposite would apply for reduced net head. The following budgetary pricing was obtained.

Water-to-Wire Budgetary Pricing for Pump - Turbine			
Turbine Type	Maximum Discharge	Output	Budgetary Pricing – Canyon Hydro
Cornell Pump-Turbine	13.1 cfs	335 kW	$172,140

Upon a no load shutdown occurring at a net head of about 400 feet, the turbine discharge would decrease from 13.1 cfs to about 6.9 cfs within 3 seconds. A hydraulic transient analysis would be required to determine if waterhammer would be an issue in either the turnout piping or Pipeline No. 5. However, since turbine discharge is only about five percent of the design Pipeline No. 5 discharge, it is not anticipated that waterhammer would be an issue in Pipeline

No. 5. During a manual shutdown, the decrease in flow across the turbine would be gradual, as the generator is not disconnected from the utility grid immediately. It should be noted that if this type of turbine is selected, it will be more important to fine tune the shutdown time, waterhammer protection, and the unit runaway speed parameters than for the pelton unit.

4.2 Powerhouse Facilities.

The powerhouse would consist of a reinforced concrete slab on grade with a below-grade wet well, similar to existing construction for the Flow Control Facility. The turbine-generator would be installed on the floor slab and the turbine would discharge downward into the wet well. Turnout piping would be extended from the existing buried isolation joint at the MWD/District interface, and would be sloped upward at a 45 degree angle to transition from buried to exposed piping. Upon obtaining the required elevation above grade, the piping would extend horizontally to the turbine. The pump turbine option requires a minimum of ten diameters of straight pipe upstream from the turbine inlet, as required by the turbine manufacturer and as shown on the figures. A tee would be located in the turbine inlet piping to allow discharge through the sleeve valve. With this configuration, the sleeve valve inlet piping would be above grade rather than in a vault below grade. This will improve access and simplify operation and maintenance of the isolation butterfly valve. The sleeve valve configuration would be changed from horizontal wall-mounted to vertical floor-mounted.

A powerhouse building would be provided for security, noise considerations, and to prevent rainfall and dust from contaminating the turbine-generator and hydraulic power unit. The building could be constructed of masonry block, pre-fabricated fiberglass, or other options.

Based on the required 10 diameters of straight pipe upstream from the turbine inlet for the pump turbine option, the size of the Pelton turbine equipment, and a desire to not change the location of the existing isolation joint, it would be necessary for the new wet well to be located several feet south of the existing wet well location. As a result, it is anticipated that the existing Flow Control Vault, including the wet well, would be demolished and the powerhouse facilities would be constructed at the required location.

The configuration of the potable water piping would be revised to allow discharge into the new wet well. The 20-inch PVC piping would be reconnected to the new wet well for turbine and sleeve valve discharges. During construction a temporary bypass interconnection will be provided between the 6-inch potable water pipeline and the 20-inch PVC discharge piping, as shown on Figures 2 and 6. A flow meter and isolation valve will be provided to regulate flow to meet the requirements of the Agreement.

The powerhouse would contain the turbine with an induction generator rated 480 V, 3-phase, 60 Hz. The induction generator would connect to a 480 volt switchgear bus through a generator circuit breaker. The 480 volt switchgear bus would be directly connected to the low voltage windings of a 480/16 kV, 3-phase, generator step-up (GSU) transformer at the point of connection to the Southern California Edison (SCE) 16 kV power pole location through overhead cables. The high voltage windings of the GSU transformer would be connected to a pole mounted 16 kV disconnect switch to deliver the generating power to the SCE 16 kV distribution grid. Utility revenue metering provisions will be furnished at 16 kV power pole site.

When the generator is off-line, the SCE 16 kV line will provide power through the GSU to the hydropower facility. The hydropower facility will be added to the District SCADA system using the existing RTU to allow remote monitoring of and operation of the turbine-generator.

The general arrangement of the powerhouse and equipment will essentially be the same for use of either a pelton-type turbine or a pump-turbine, although the powerhouse building size would be somewhat smaller for the pump-turbine application. The site plan, powerhouse plan, powerhouse section and powerhouse elevations based on use of a pelton-type turbine are shown in Figures 2 though 5. The same features for a pump-turbine are shown in Figures 6 through 9.

5.0 Estimated Costs

Feasibility level cost estimates were prepared for each of the three alternatives evaluated using budgetary water-to-wire turbine-generator pricing obtained from Canyon Hydro, quantity takeoffs of civil/structural items, and B&V cost estimating experience for similar facilities. The cost estimates are based on the facility arrangements shown in Figures 2 through 9 and include direct capital costs and indirect costs. Indirect costs include bonds and insurance, District administration and legal, construction management and monitoring and engineering. The costs are summarized as follows. Cost breakdowns for each alternative are provided at the end of the memorandum.

Estimated Project Costs	
Alternative	**Estimated Project Cost**
10 cfs Pelton	$1,844,000
15 cfs Pelton	$2,064,000
13.1 cfs Pump-Turbine	$1,312,000

6.0 Annual Generation and Energy Revenue

Daily turnout flow records for the period 2003 – 2009 were used for the generation estimates. For each alternative considered, operation at maximum turbine discharge was considered, with the hours of operation each day calculated based on the required volume of discharge.

As previously indicated, the Pipeline No. 5 Design discharge condition is used for this evaluation, with a HGL elevation of 1435 ft at the turnout. Net head at the turbine will be equal to this HGL minus the turbine centerline elevation and head losses in the turnout piping. For the arrangement considered, the turbine centerline elevation will be at approximately El. 1020 ft, and the head losses in the turnout piping will be dependent on the maximum turbine discharge used. Turnout piping head losses and the resulting turbine net head are summarized as follows.

Turnout Piping Head Loss and Turbine Net Head					
Alternative	Discharge	Pipeline No. 5 HGL Elevation	Turnout Piping Head Loss	Turbine Centerline Elevation	Turbine Net Head
10 cfs Pelton	10 cfs	1435 ft	13 ft	1020 ft	402 ft
15 cfs Pelton	15 cfs	1435 ft	30 ft	1020 ft	385 ft
13.1 cfs Pump-Turbine	13.1 cfs	1435 ft	22 ft	1020 ft	393 ft

Average energy generation for each day was estimated for each alternative based on maximum turbine discharge, required hours of operation, net head, and turbine-generator efficiency information provided by the turbine manufacturers. The daily generation values were summed for each year and divided by the number of years. This calculation was performed for each day of the year.

Energy rates were based on the SCE program for Eligible Public Water Agencies, as defined in the Water Agency Tariff for Eligible Renewables Schedule CREST (Schedule), in which SCE purchases the total generation output up to 1.5 MW. The District is defined as an Eligible Public Water Agency as described in the Schedule. The total generation output is purchased based on the Market-Price-Referent (MPR), Time of Use (TOU) Periods, and Energy Allocation Factors. The MPR defines the unit price ($/kWh) at which the energy is purchased. The TOU periods are associated with periods of the day/night and seasons and are defined as On-Peak, Mid-Peak, Off-Peak and Super-off-peak. Based on the TOU period, the generation output is assigned an energy allocation factor as shown below. The energy allocation factors indicate the relative value of energy during the defined period and are multiplied by the MPR to obtain actual energy rates for the TOU Period. For purposes of this evaluation the applicable energy rates were based on the TOU Periods and assuming a contract period of 25 years at the 2012 MPR of 0.10507 $/kWh.

SCE Schedule WATER Energy Allocation Factors		
Season	TOU Period	Energy Allocation Factor
Summer	On-Peak	3.13
	Mid-Peak	1.35
	Off-Peak	0.75
Winter	Mid-Peak	1.00
	Off-Peak	0.83
	Super-off-Peak	0.61

To estimate potential energy revenues, the energy generation periods for each day were centered about the time of day where the Energy Allocation Factor (and resulting energy rates) would be at its highest: Summer Season on-peak TOU, or Winter Season mid-peak TOU. Generation during periods longer than the defined TOU for maximum Energy Allocation Factor

were assigned to the adjacent TOU period and the appropriate energy rate. An availability factor of 0.98 was used to account for scheduled and forced outages.

Average annual energy generation and annual revenue for each alternative considered are as follows.

Average Annual Generation and Revenue		
Alternative	**Average Annual Energy Generation**	**Average Annual Energy Revenue**
10 cfs Pelton	1,362 MWh	$161,000
15 cfs Pelton	1,304 MWh	$168,500
13.1 cfs Pump-Turbine	1,281 MWh	$161,000

7.0 Economic Analysis

The following economic analyses were performed for the alternatives considered.

- **Net Present Worth.** This analysis calculates the present worth of energy revenues during the evaluation period and project capital costs.
- **Cash Flow.** This analysis compares total project costs financed with annual generation revenues during the evaluation period. The payback period, when cumulative revenues are equal to the capital cost financed, is derived from this analysis.

The following economic parameters were used:

- Evaluation Period – 25 years
- Loan Period – 10 years
- Escalation rate for capital and O&M costs – 3 percent
- Present Worth Discount Factor – 2 percent

The results of the economic analyses are as follows.

Economic Analysis Results					
Alternative	**Capital Cost ($1,000)**	**O&M Cost ($1,000/yr)**	**Net PW ($1,000)**	**Cash Flow**	**Payback Period**
10 cfs Pelton	1,844	12 to 25	1,012	Negative first 10 years	14
15 cfs Pelton	2,064	12 to 25	940	Negative first 10 years	15
13.1 cfs Pump-Turbine	1,312	12 to 25	1,569	Always break even or positive	9

8.0 Approvals, Permits, and Licensing

Implementation of the WR-34 Hydroelectric Project will require that the District obtain various approvals, permits and licenses as summarized below.

MWD Approval. Approval from MWD will be required for the District to obtain additional easements and for construction of the Hydroelectric Facility within the MWD easement. It is recommended that Black & Veatch work with the District to investigate these approvals with MWD as an initial step in project implementation.

SCE Power Purchase Agreement. An agreement with SCE for the purchase of energy generated by the Hydroelectric Facility will be required. The WR-34 Hydroelectric Generation Facility falls under the SCE CREST program and application process is described below.

- Download the tariff, contracts, and interconnection application from SCE's website at www.sce.com/crest.
- Obtain site control.
- Open an SCE retail account at the site, if an account does not already exist.
- Complete the design for the generating facility, including equipment specifications, single line diagrams(s) stamped by a licensed engineer, site plans and maps. This is input to the interconnection application, and to Appendix A of the CREST agreement.
- Obtain California Energy Commission (CEC) pre-qualification that the facility is an Eligible Renewable Resource. A copy of the certificate will be placed in Appendix A.
- Download and submit an interconnection application to SCE (Peter Moreno) and work with SCE to complete an Interconnection Facilities Financing and Ownership Agreement (IFFOA) for the generating facility. This is input to Appendix B of the CREST Agreement.
- Be prepared to complete the construction of the generating facility and achieve Initial Operation within 18 months of the CREST agreement execution date. See Sections 2.8 and 4.2 of the CREST agreement.
- Fill out the draft CREST agreement and submit to SCE (George Wiltsee). Work with SCE to make the agreement 100% correct, and execute the CREST agreement.

Encroachment Permit. An Encroachment Permit from the City of Temecula would be required for construction within City of Temecula Right-of-Way. Permit requirements would include the following:

- Notify the Land Development Inspection Division at least 2 working days in advance of construction
- Comply with Standard Specifications and Drawings for Public Works Construction
- Hold a pre-construction meeting
- Submit two sets of drawings for approval with the permit application

Permit review and approval is expected to take approximately two weeks. The presence of a City of Temecula Right-of-Way, and the need for an Encroachment Permit, should be investigated if the District elects to proceed with project implementation.

CEQA Documentation. This approval will include preparation of the following:

- CEQA Initial Study Environmental Checklist
- Environmental Impact Assessment Form
- Mitigated Negative Declaration (MND)
- Mitigation Monitoring Program

It is expected that completion of the required CEQA documentation will require approximately 6 to 8 months.

FERC Conduit Exemption. It is expected that this project will comply with the requirements for a Conduit Exemption as issued by the Federal Energy Regulatory Commission (FERC). Applicants for a Conduit Exemption must follow many of the same steps as required for a FERC License; however, the process of obtaining the Exemption involves fewer steps. The scope of the review process is also narrower than for the licensing process since the project and its associated impacts are generally small. The following three stages of consultation are required for obtaining a Conduit Exemption.

- 1st Stage. Notify resource agencies and Indian tribes of intention to apply for an exemption, conduct a joint meeting with agencies, tribes and the public, and finalize study plans if any. The agencies, tribes and public may request that studies be performed to identify any project impacts. Many, if not all, studies may have been previously performed during development of the Santa Margarita River Outfall Project.

- 2nd Stage. Proceed with studies, if any, and provide stakeholders with a Draft Application and results of studies. Stakeholders will submit comments to the District. Under FERC's direction, resolve disputes as necessary.

- 3rd Stage. Submit an Application for Conduit Exemption to FERC. Respond to any FERC comments on the Application.

It is anticipated that the CEQA documentation will be included in the Conduit Exemption Application. The time frame for obtaining a Conduit Exemption is expected to be approximately 7 to 12 months.

9.0 Project Development Plan

Development of the WR-34 Hydroelectric Facility is anticipated to require the following key tasks. The anticipated schedule dates for each task are also provided.

Key Task	Start	Finish
Permits, Approvals and Licensing	August 1, 2010	March 31, 2011
Site Investigations	August 1, 2010	September 30, 2010
Turbine-Generator Water-to-Wire Procurement Package (Prepare specifications, bid and award)	August 1, 2010	October 15, 2010
Turbine-Generator Manufacture and Delivery	October 15, 2010	May 31, 2011
Detailed Design	August 15, 2010	December 15, 2010
Construction Package (Prepare specifications, bid and award)	December 15, 2010	April 30, 2011
Construction Period	May 1, 2011	October 31, 2011
Project Closeout Activities	November 1, 2011	November 30, 2011

10.0 Recommendations

Based on the favorable economic position, it is recommended to proceed with the design and construction of the 13.1 cfs pump-turbine option. The pump-turbine is the preferred turbine type based on the items listed below:

- The pump-turbine is a smaller unit and therefore requires a smaller, less expensive building.
- The pump-turbine has a lower capital cost.
- Payback period for the pump-turbine option is approximately 9 years.
- The pump-turbine meets the energy generation requirements for the project's economic feasibility.
- Implementing the hydroelectric facility with the pump-turbine alternative results in a net positive financial position for the District, including generating in excess of $1.6 million dollars.
- Taking advantage of this otherwise untapped resource helps stabilize the District's water rates while producing clean energy for the community.

BLACK & VEATCH
Building a world of difference.

APPENDIX

Owner:	**Rancho California Water District**	**By:**	**C.Tabor**
Project:	**WR-34 Hydroelectric Power Generation Facility**	**Date:**	**14-May-10**
Prj. No.	**167668**	**Check:**	**V. Tsai**
Title:	**Opinion of Probable Construction Cost - Pelton Turbine 10 cfs**	**Date:**	**24-May-10**

SUMMARY

1	**MOBILIZATION AND DEMOBILIZATION**		**$36,000**
2	**SITE WORK**		**$42,000**
3	**HYDROELECTRIC BUILDING**		**$164,900**
4	**MECHANICAL WORK**		**$566,000**
5	**ELECTRICAL WORK**		**$175,000**
6	**I&C WORK**		**$50,000**
	Subtotal		**$1,033,900**
	Sales Tax	8.75%	**$52,390**
	Subtotal		**$1,086,290**
	Contract Overhead and Profit	10%	**$108,629**
	Subtotal Construction Cost		**$1,194,919**
	Bond and Insurance	2%	**$23,898**
	Contingency	15%	**$179,238**
	Administration/Legal	2%	**$23,898**
	Construction Management and Monitoring	6%	**$71,695**
	Engineering		**$350,000**
	Subtotal		**$1,843,648**
	Grant Funding	0%	$0.00
	TOTAL PROBABLE PROJECT COST		**1,843,648**

Owner: Rancho California Water District
Project: WR-34 Hydroelectric Power Generation Facility
Prj. No. 167668
Title: Opinion of Probable Construction Cost - Pelton Turbine 10 cfs

	ITEM DESCRIPTION	QUANT.	UNIT	UNIT COST	TOTAL COST
				$	$
1	**MOBILIZATION AND DEMOBILIZATION**				
	Mobilization and Demobilization		LS		7,000
	Supervision		LS		11,000
	Temporary facilities		LS		1,000
	Temporary utilities		LS		2,000
	Equipment rental & misc.		LS		15,000
	Subtotal Mobilization & Demobilization				**$36,000**
2	**SITE WORK**				
	Earthwork				
	Clear and Grub	0.05	AC	19,150	1,000
	Excavation	160	CY	25.00	4,000
	Compacted Fill	40	CY	25.00	1,000
	Retaining Wall		LS		6,000
	Site Improvements		LS		15,000
	Relocation of Chemical Storage Tank		LS		5,000
	Relocation and salvage of 6-inch pipe and appurtenances		LS		10,000
	Subtotal Awning Structure Work				**$42,000**
3	**HYDROELECTRIC BUILDING**				
	Concrete				
	Foundation	17	CY	800.00	13,600
	Slab-on-Grade	40	CY	900.00	36,000
	Concrete Encasement	15	CY	500.00	7,500
	Miscellaneous	15	CY	500.00	7,500
	Masonry				
	8 inch Smooth Face CMU	2,000	SF	15.00	30,000
	Metals				
	Miscellaneous		LS		15,000
	Thermal & Moisture Protection				
	Roof				
	Plywood	1,100	SF	5.50	6,100
	Insulation	1,100	SF	3.00	3,300
	Clay Tiles	11	SQ	484.00	5,400
	Miscellaneous		LS		5,000
	Powerhouse Doors				
	Hollow metal	1	EA	2,000.00	2,000
	Hollow metal, double door	1	EA	4,000.00	4,000
	Door Hardware		LS		2,000
	Powerhouse Finishes				
	Acoustical Panels	1,500	SF	5.00	7,500
	Mechanical				
	Plumbing		LS		20,000
	Subtotal Hydroelectric Building Work				**$164,900**

Owner: **Rancho California Water District**
Project: **WR-34 Hydroelectric Power Generation Facility**
Prj. No. **167668**
Title: **Opinion of Probable Construction Cost - Pelton Turbine 10 cfs**

4	**MECHANICAL WORK**				
	Pelton Turbine & Generator Package	1	EA	550,000	550,000
	16-inch Pipe (CMLWS)	20	LF	215.00	4,300
	6-inch Pipe (CMLWS)	20	LF	85.00	1,700
	Tie-in Connection		LS		10,000
	Subtotal Mechanical Work				**$566,000**
5	**ELECTRICAL WORK**				
	Tie-in Connection to SCE Grid				145,000
	Electrical				30,000
	Subtotal Electrical Work				**$175,000**
6	**I&C WORK**				
	I&C				50,000
	Subtotal I&C Work				**$50,000**

Owner:	**Rancho California Water District**	**By:**	**C.Tabor**
Project:	**WR-34 Hydroelectric Power Generation Facility**	**Date:**	**14-May-10**
Prj. No.	**167668**	**Check:**	**V. Tsai**
Title:	**Opinion of Probable Construction Cost - Pelton Turbine 15 cfs**	**Date:**	**24-May-10**

SUMMARY

1	**MOBILIZATION AND DEMOBILIZATION**		**$38,000**
2	**SITE WORK**		**$42,000**
3	**HYDROELECTRIC BUILDING**		**$164,900**
4	**MECHANICAL WORK**		**$716,000**
5	**ELECTRICAL WORK**		**$175,000**
6	**I&C WORK**		**$50,000**
	Subtotal		**$1,185,900**
	Sales Tax	8.75%	**$60,265**
	Subtotal		**$1,246,165**
	Contract Overhead and Profit	10%	**$124,616**
	Subtotal Construction Cost		**$1,370,781**
	Bond and Insurance	2%	**$27,416**
	Contingency	15%	**$205,617**
	Administration/Legal	2%	**$27,416**
	Construction Management and Monitoring	6%	**$82,247**
	Engineering		**$350,000**
	Subtotal		**$2,063,477**
	Grant Funding	0%	$0.00
	TOTAL PROBABLE PROJECT COST		**2,063,477**

Owner: Rancho California Water District
Project: WR-34 Hydroelectric Power Generation Facility
Prj. No. 167668
Title: Opinion of Probable Construction Cost - Pelton Turbine 15 cfs

	ITEM DESCRIPTION	QUANT.	UNIT	UNIT COST	TOTAL COST
				$	$
1	**MOBILIZATION AND DEMOBILIZATION**				
	Mobilization and Demobilization		LS		7,000
	Supervision		LS		13,000
	Temporary facilities		LS		1,000
	Temporary utilities		LS		2,000
	Equipment rental & misc.		LS		15,000
	Subtotal Mobilization & Demobilization				**$38,000**
2	**SITE WORK**				
	Earthwork				
	Clear and Grub	0.05	AC	19,150	1,000
	Excavation	160	CY	25.00	4,000
	Compacted Fill	40	CY	25.00	1,000
	Retaining Wall		LS		6,000
	Site Improvements		LS		15,000
	Relocation of Chemical Storage Tank		LS		5,000
	Relocation and salvage of 6-inch pipe and appurtenances		LS		10,000
	Subtotal Awning Structure Work				**$42,000**
3	**HYDROELECTRIC BUILDING**				
	Concrete				
	Foundation	17	CY	800.00	13,600
	Slab-on-Grade	40	CY	900.00	36,000
	Concrete Encasement	15	CY	500.00	7,500
	Miscellaneous	15	CY	500.00	7,500
	Masonry				
	8 inch Smooth Face CMU	2,000	SF	15.00	30,000
	Metals				
	Miscellaneous		LS		15,000
	Thermal & Moisture Protection				
	Roof				
	Plywood	1,100	SF	5.50	6,100
	Insulation	1,100	SF	3.00	3,300
	Clay Tiles	11	SQ	484.00	5,400
	Miscellaneous		LS		5,000
	Powerhouse Doors				
	Hollow metal	1	EA	2,000.00	2,000
	Hollow metal, double door	1	EA	4,000.00	4,000
	Door Hardware		LS		2,000
	Powerhouse Finishes				
	Acoustical Panels	1,500	SF	5.00	7,500
	Mechanical				
	Plumbing		LS		20,000
	Subtotal Hydroelectric Building Work				**$164,900**

Owner: **Rancho California Water District**
Project: **WR-34 Hydroelectric Power Generation Facility**
Prj. No. **167668**
Title: **Opinion of Probable Construction Cost - Pelton Turbine 15 cfs**

4	**MECHANICAL WORK**				
	Pelton Turbine & Generator Package	1	EA	700,000	700,000
	16-inch Pipe (CMLWS)	20	LF	215.00	4,300
	6-inch Pipe (CMLWS)	20	LF	85.00	1,700
	Tie-in Connection		LS		10,000
	Subtotal Mechanical Work				**$716,000**
5	**ELECTRICAL WORK**				
	Tie-in Connection to SCE Grid				145,000
	Electrical				30,000
	Subtotal Electrical Work				**$175,000**
6	**I&C WORK**				
	I&C				50,000
	Subtotal I&C Work				**$50,000**

Owner:	**Rancho California Water District**	**By:**	**C.Tabor**
Project:	**WR-34 Hydroelectric Power Generation Facility**	**Date:**	**14-May-10**
Prj. No.	**167668**	**Check:**	**V. Tsai**
Title:	**Opinion of Probable Construction Cost - Pump Turbine 13 cfs**	**Date:**	**24-May-10**

SUMMARY

1	**MOBILIZATION AND DEMOBILIZATION**		**$32,000**
2	**SITE WORK**		**$36,400**
3	**HYDROELECTRIC BUILDING**		**$133,000**
4	**MECHANICAL WORK**		**$239,782**
5	**ELECTRICAL WORK**		**$175,000**
6	**I&C WORK**		**$50,000**
	Subtotal		**$666,182**
	Sales Tax	8.75%	**$33,295**
	Subtotal		**$699,477**
	Contract Overhead and Profit	10%	**$69,948**
	Subtotal Construction Cost		**$769,424**
	Bond and Insurance	2%	**$15,388**
	Contingency	15%	**$115,414**
	Administration/Legal	2%	**$15,388**
	Construction Management and Monitoring	6%	**$46,165**
	Engineering		**$350,000**
	Subtotal		**$1,311,780**
	Grant Funding	0%	$0.00
	TOTAL PROBABLE PROJECT COST		**1,311,780**

Owner: Rancho California Water District
Project: WR-34 Hydroelectric Power Generation Facility
Prj. No. 167668
Title: Opinion of Probable Construction Cost - Pump Turbine 13 cfs

	ITEM DESCRIPTION	QUANT.	UNIT	UNIT COST	TOTAL COST
				$	$
1	**MOBILIZATION AND DEMOBILIZATION**				
	Mobilization and Demobilization		LS		7,000
	Supervision		LS		7,000
	Temporary facilities		LS		1,000
	Temporary utilities		LS		2,000
	Equipment rental & misc.		LS		15,000
	Subtotal Mobilization & Demobilization				**$32,000**
2	**SITE WORK**				
	Earthwork				
	Clear and Grub	0.04	AC	19,150	800
	Excavation	150	CY	25.00	3,800
	Compacted Fill	30	CY	25.00	800
	Retaining Wall		LS		6,000
	Site Improvements		LS		10,000
	Relocation of Chemical Storage Tank		LS		5,000
	Relocation and salvage of 6-inch pipe and appurtenances		LS		10,000
	Subtotal Awning Structure Work				**$36,400**
3	**HYDROELECTRIC BUILDING**				
	Concrete				
	Foundation	11	CY	800.00	8,800
	Slab-on-Grade	25	CY	900.00	22,500
	Concrete Encasement	15	CY	500.00	7,500
	Miscellaneous	15	CY	500.00	7,500
	Masonry				
	8 inch Smooth Face CMU	1,580	SF	15.00	23,700
	Metals				
	Miscellaneous		LS		15,000
	Thermal & Moisture Protection				
	Roof				
	Plywood	700	SF	5.50	3,900
	Insulation	700	SF	3.00	2,100
	Clay Tiles	8	SQ	484.00	4,000
	Miscellaneous		LS		5,000
	Powerhouse Doors				
	Hollow metal	1	EA	2,000.00	2,000
	Hollow metal, double door	1	EA	4,000.00	4,000
	Door Hardware		LS		2,000
	Powerhouse Finishes				
	Acoustical Panels	1,000	SF	5.00	5,000
	Mechanical				
	Plumbing		LS		20,000
	Subtotal Hydroelectric Building Work				**$133,000**

Owner: **Rancho California Water District**
Project: **WR-34 Hydroelectric Power Generation Facility**
Prj. No. **167668**
Title: **Opinion of Probable Construction Cost - Pump Turbine 13 cfs**

4	**MECHANICAL WORK**				
	Pelton Turbine & Generator Package	1	EA	223,782	223,782
	16-inch Pipe (CMLWS)	20	LF	215.00	4,300
	6-inch Pipe (CMLWS)	20	LF	85.00	1,700
	Tie-in Connection		LS		10,000
	Subtotal Mechanical Work				**$239,782**
5	**ELECTRICAL WORK**				
	Tie-in Connection to SCE Grid				145,000
	Electrical				30,000
	Subtotal Electrical Work				**$175,000**
6	**I&C WORK**				
	I&C				50,000
	Subtotal I&C Work				**$50,000**

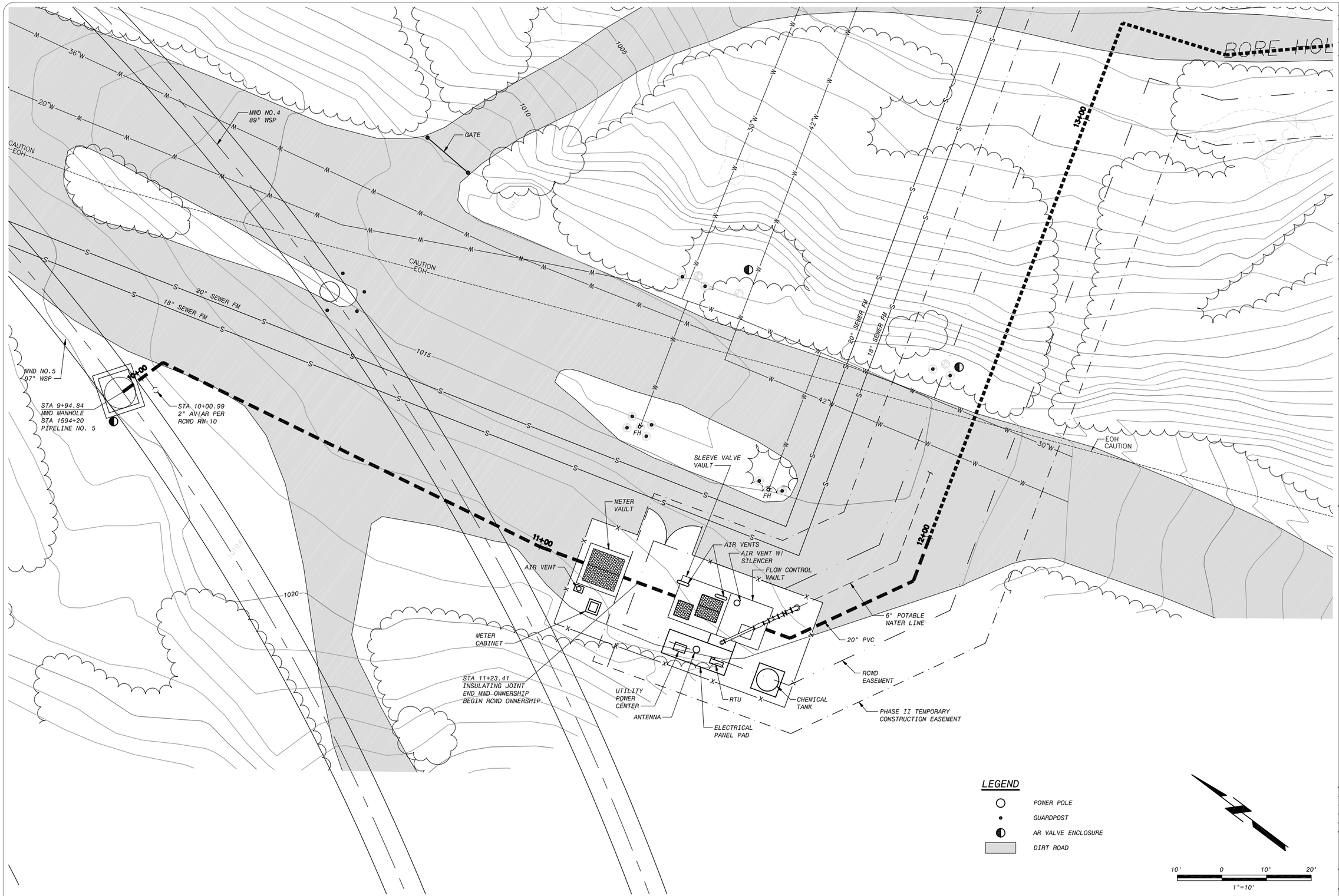

PRELIMINARY - NOT FOR CONSTRUCTION

NO.	BY	CK	APP

REVISIONS AND RECORD OF ISSUE

DATE

CYGNET ID:
WF:
XREF1:
XREF2:
XREF3:
XREF4:
XREF5:
SAVED: GLA36511, 6/1/2010 11:15:27 AM
PLOTTED: GLA36511, 6/1/2010 11:15:29 AM
USER: GLA36511
DWG VER:

BLACK & VEATCH Corporation
San Marcos, California

WR-34 HYDROELECTRIC POWER GENERATION FACILITY
PRE-DESIGN EVALUATION

EXISTING SITE PLAN

DESIGNED: CVT
DETAILED: JEG
CHECKED: VT
APPROVED:
DATE:

0 1/2 1
IF THIS BAR DOES NOT MEASURE 1" THEN DRAWING IS NOT TO FULL SCALE

PROJECT NO.
167668

FIGURE 1
SHEET
1 OF 9

FD6000
D6000

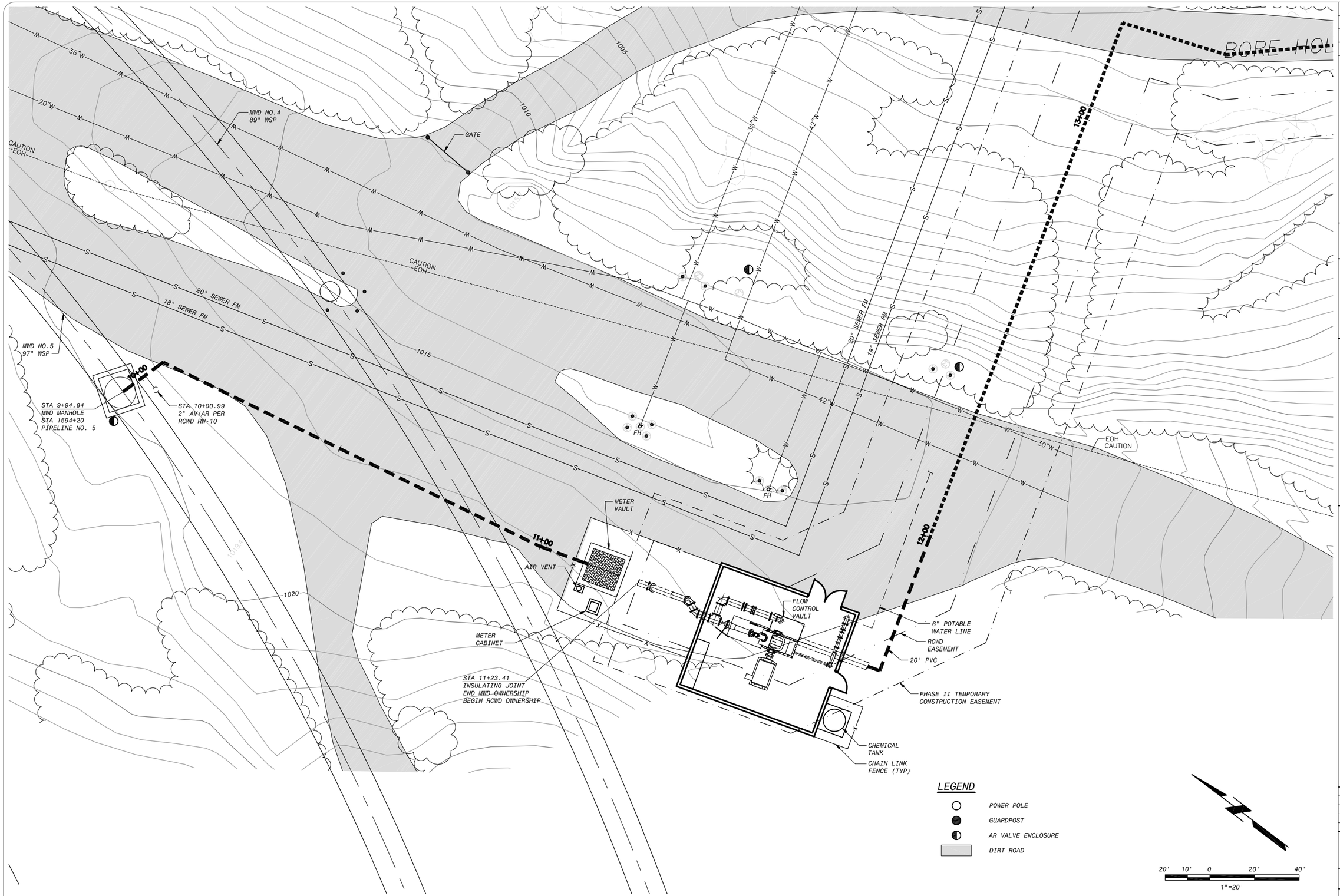

PRELIMINARY - NOT FOR CONSTRUCTION

DATE	REVISIONS AND RECORD OF ISSUE	NO.	BY	CK	APP

CYGNET ID: XREF1:
WF: XREF2:
SAVED: GLA36511, 6/1/2010 11:17:02 AM XREF3:
PLOTTED: GLA36511, 6/1/2010 4:41:20 PM XREF4:
USER: GLA36511 DWG VER: XREF5:

BLACK & VEATCH Corporation
San Marcos, California

WR-34 HYDROELECTRIC POWER GENERATION FACILITY
PRE-DESIGN EVALUATION

PELTON TURBINE SITE PLAN

DESIGNED: CVT
DETAILED: JEG
CHECKED: VT
APPROVED:
DATE:

0 1/2 1
IF THIS BAR DOES NOT MEASURE 1" THEN DRAWING IS NOT TO FULL SCALE

PROJECT NO.
167668

FIGURE 2
SHEET
2 OF 9

FD6000
D6000

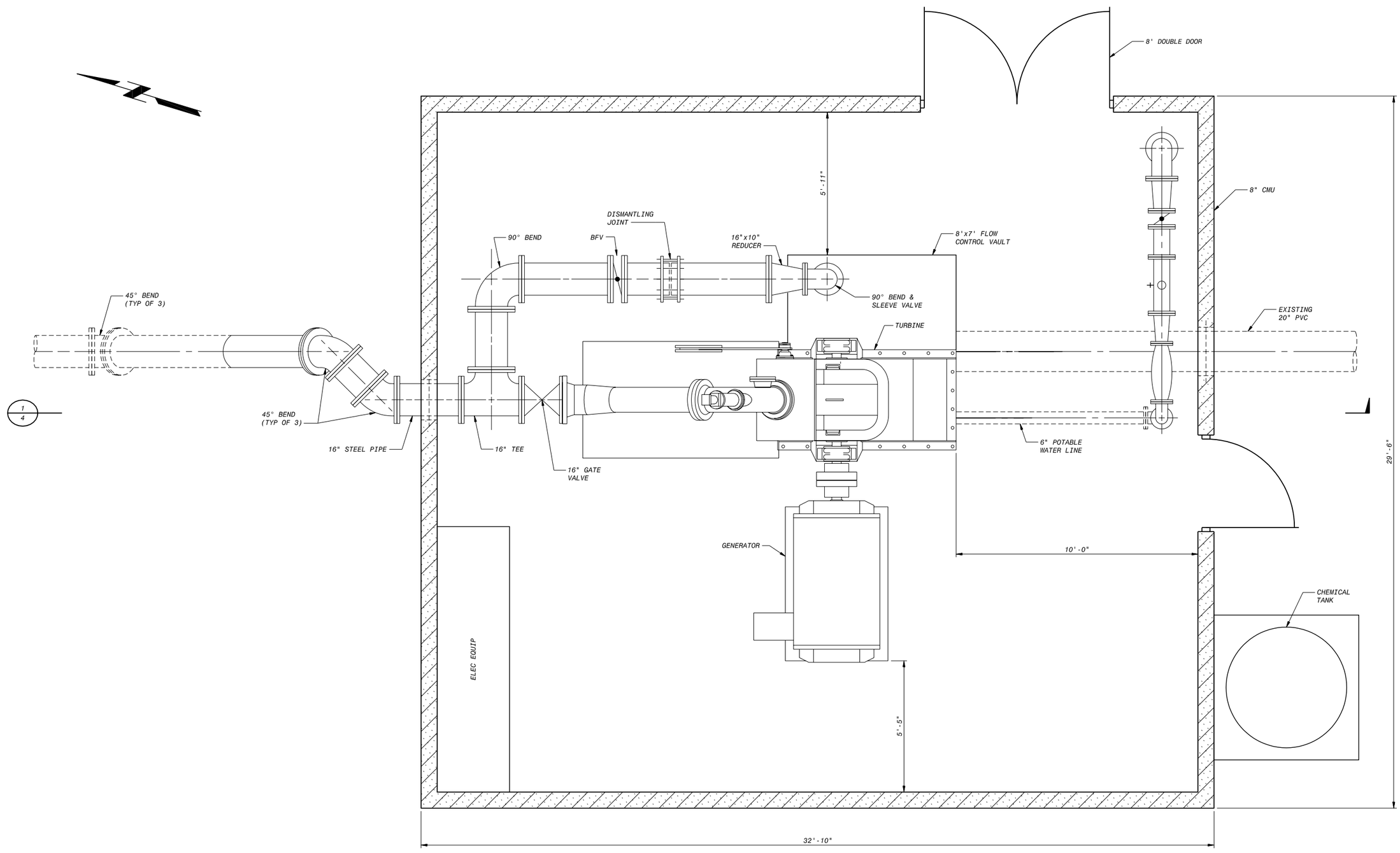

PLAN
1/4" = 1'-0"

PRELIMINARY - NOT FOR CONSTRUCTION

NO.	BY	CK	APP

REVISIONS AND RECORD OF ISSUE

DATE
CYGNET ID:
WF:
SAVED: GLA36511, 6/1/2010 4:38:39 PM
PLOTTED: GLA36511, 6/4/2010 3:11:27 PM
USER: GLA36511

XREF1:
XREF2:
XREF3:
XREF4:
XREF5:
DWG VER:

BLACK & VEATCH Corporation
San Marcos, California

WR-34 HYRDOELECTRIC POWER GENERATION FACILITY
PRE-DESIGN EVALUATION

PELTON TURBINE
POWER HOUSE PLAN

DESIGNED: CVT
DETAILED: JEG
CHECKED: VT
APPROVED:
DATE:

0 1/2 1
IF THIS BAR DOES NOT MEASURE 1" THEN DRAWING IS NOT TO FULL SCALE

PROJECT NO.
167668

FIGURE 3
SHEET
3 OF 9

FD6000
D6000

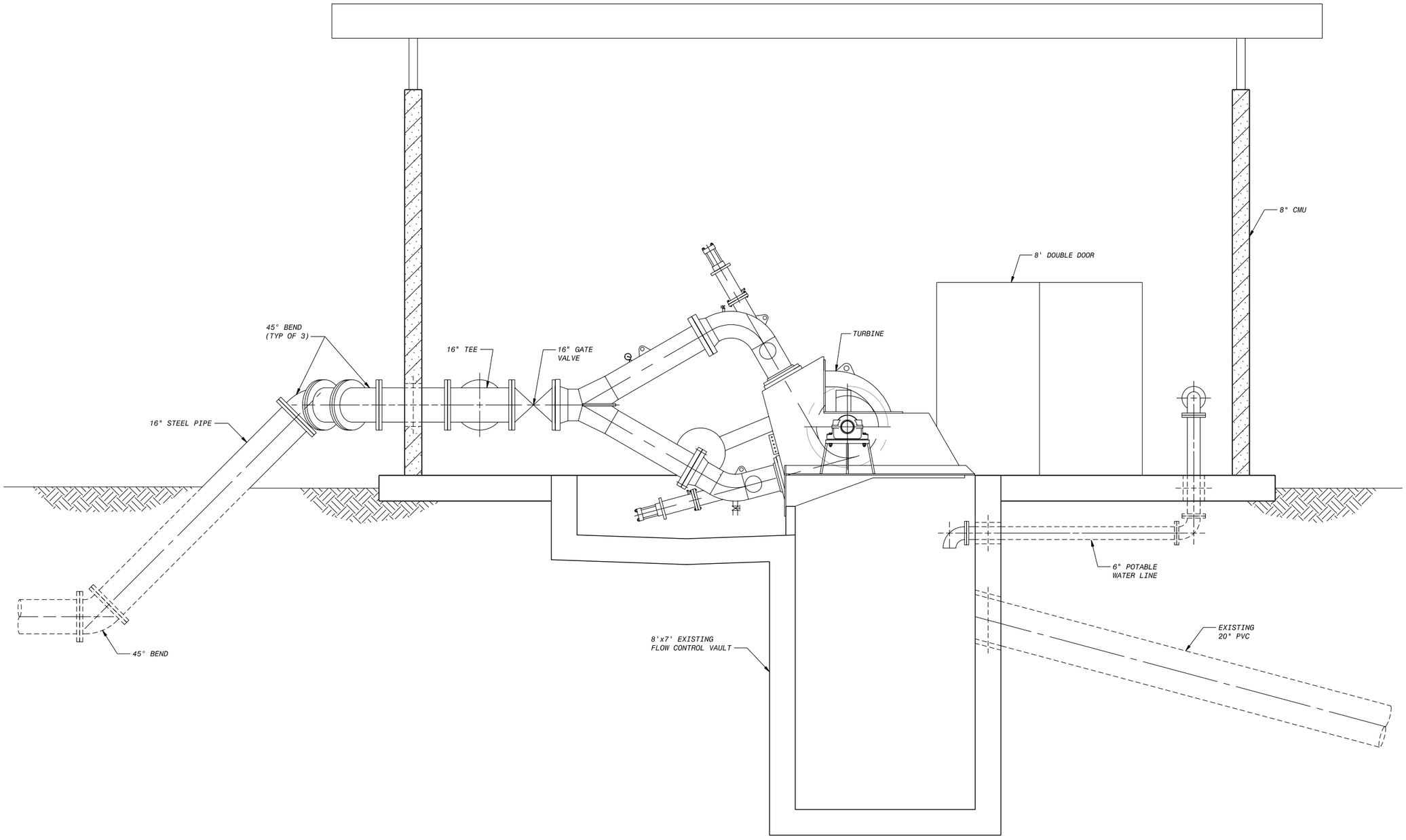

SECTION 1/3
1/4" = 1'-0"

PRELIMINARY - NOT FOR CONSTRUCTION

NO.	BY	CK	APP

DATE REVISIONS AND RECORD OF ISSUE

CYGNET ID: XREF1:
WF: XREF2:
SAVED: GLA36511, 6/4/2010 2:55:06 PM XREF3:
PLOTTED: GLA36511, 6/4/2010 2:57:46 PM XREF4:
USER: GLA36511 DWG VER: XREF5:

BLACK & VEATCH Corporation
San Marcos, California

WR-34 HYRDOELECTRIC POWER GENERATION FACILITY
PRE-DESIGN EVALUATION

PELTON TURBINE
POWER HOUSE SECTION

DESIGNED: CVT
DETAILED: JEG
CHECKED: VT
APPROVED:
DATE:

0 1/2 1
IF THIS BAR DOES NOT MEASURE 1" THEN DRAWING IS NOT TO FULL SCALE

PROJECT NO.
167668

FIGURE 4
SHEET
4 OF 9

FD6000
D6000

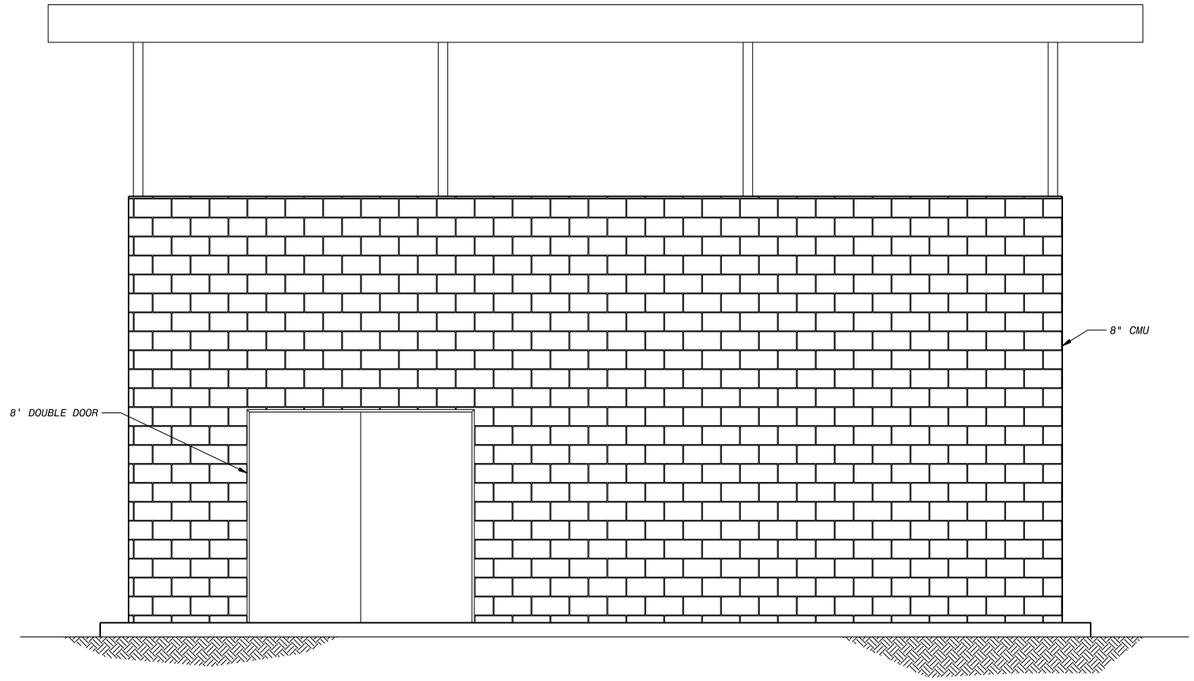

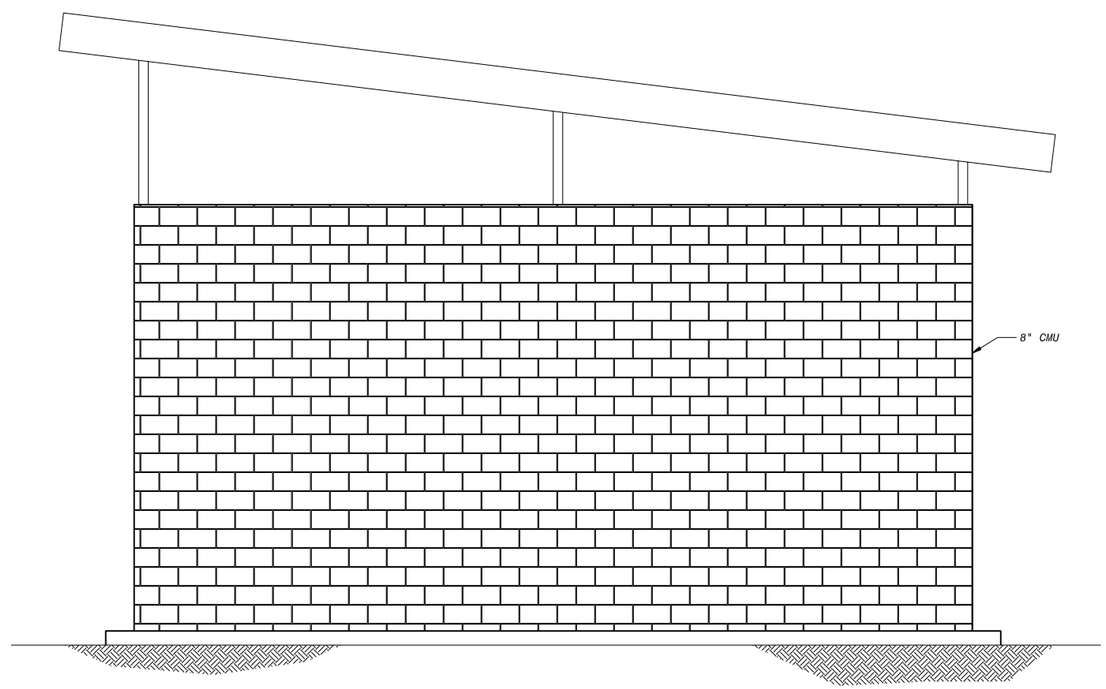

ELEVATIONS
3/16" = 1'-0"

PRELIMINARY - NOT FOR CONSTRUCTION

NO.	BY	CK	APP

DATE REVISIONS AND RECORD OF ISSUE

CYGNET ID: XREF1:
WF: XREF2:
SAVED: GLA36511, 6/4/2010 2:56:00 PM XREF3:
PLOTTED: GLA36511, 6/7/2010 11:22:52 AM XREF4:
USER: GLA36511 DWG VER: XREF5:

BLACK & VEATCH
Corporation
San Marcos, California

WR-34 HYRDOELECTRIC POWER GENERATION FACILITY
PRE-DESIGN EVALUATION

PELTON TURBINE
POWER HOUSE ELEVATION

DESIGNED: CVT
DETAILED: JEG
CHECKED: VT
APPROVED:
DATE:

0 1/2 1
IF THIS BAR DOES NOT MEASURE 1" THEN DRAWING IS NOT TO FULL SCALE

PROJECT NO.
167668

FIGURE 5
SHEET
5 OF 9

FD6000
D6000

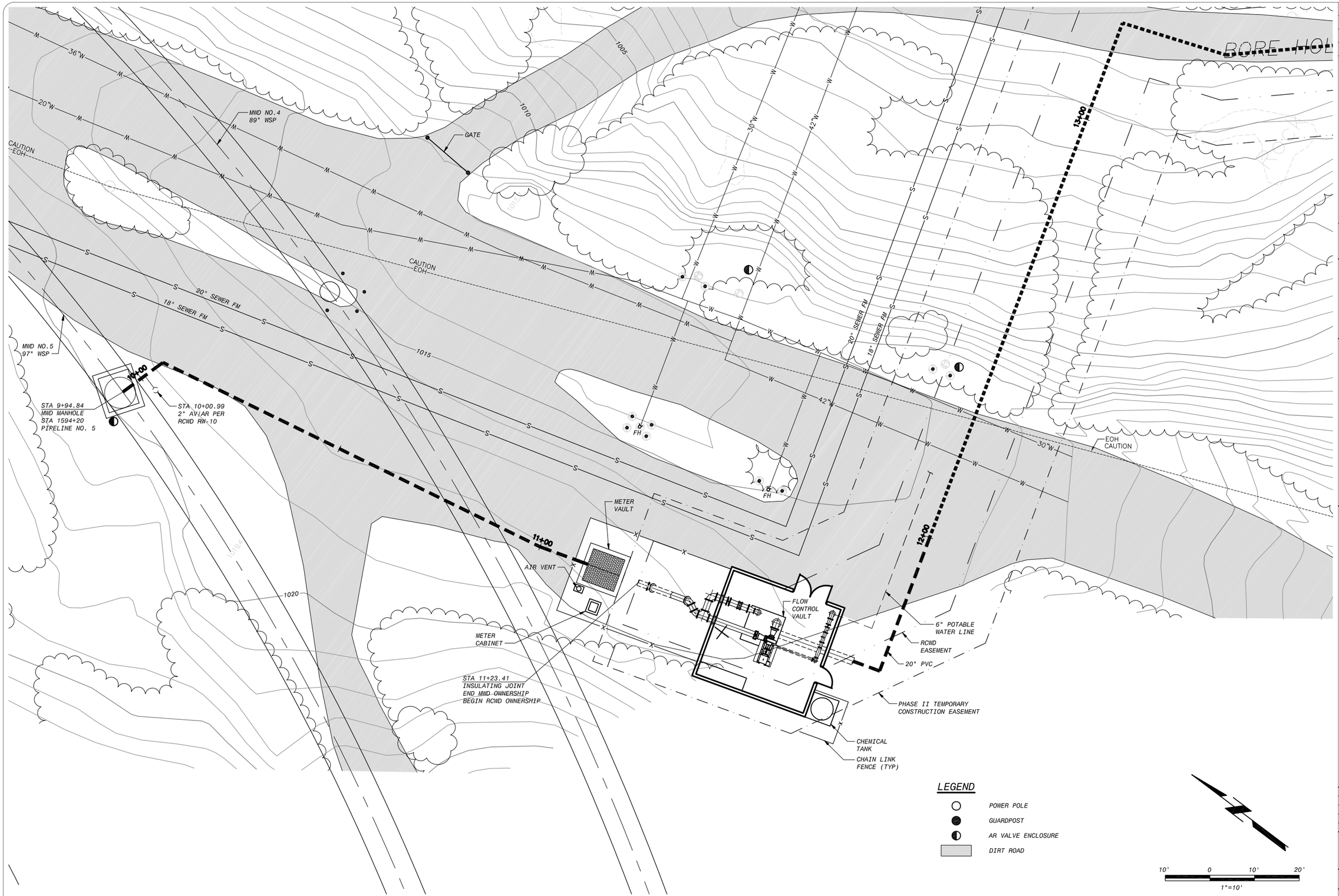

PRELIMINARY - NOT FOR CONSTRUCTION

NO.	BY	CK	APP

REVISIONS AND RECORD OF ISSUE

DATE

CYGNET ID:
WF:
XREF1:
XREF2:
XREF3:
XREF4:
XREF5:
SAVED: GLA36511, 6/1/2010 11:19:35 AM
PLOTTED: GLA36511, 6/1/2010 4:42:05 PM
USER: GLA36511
DWG VER:

BLACK & VEATCH Corporation
San Marcos, California

WR-34 HYDROELECTRIC POWER GENERATION FACILITY
PRE-DESIGN EVALUATION

PUMP TURBINE SITE PLAN

DESIGNED: CVT
DETAILED: JEG
CHECKED: VT
APPROVED:
DATE:

0 1/2 1
IF THIS BAR DOES NOT MEASURE 1" THEN DRAWING IS NOT TO FULL SCALE

PROJECT NO.
167668

FIGURE 6
SHEET
6 OF 9

FD6000
D6000

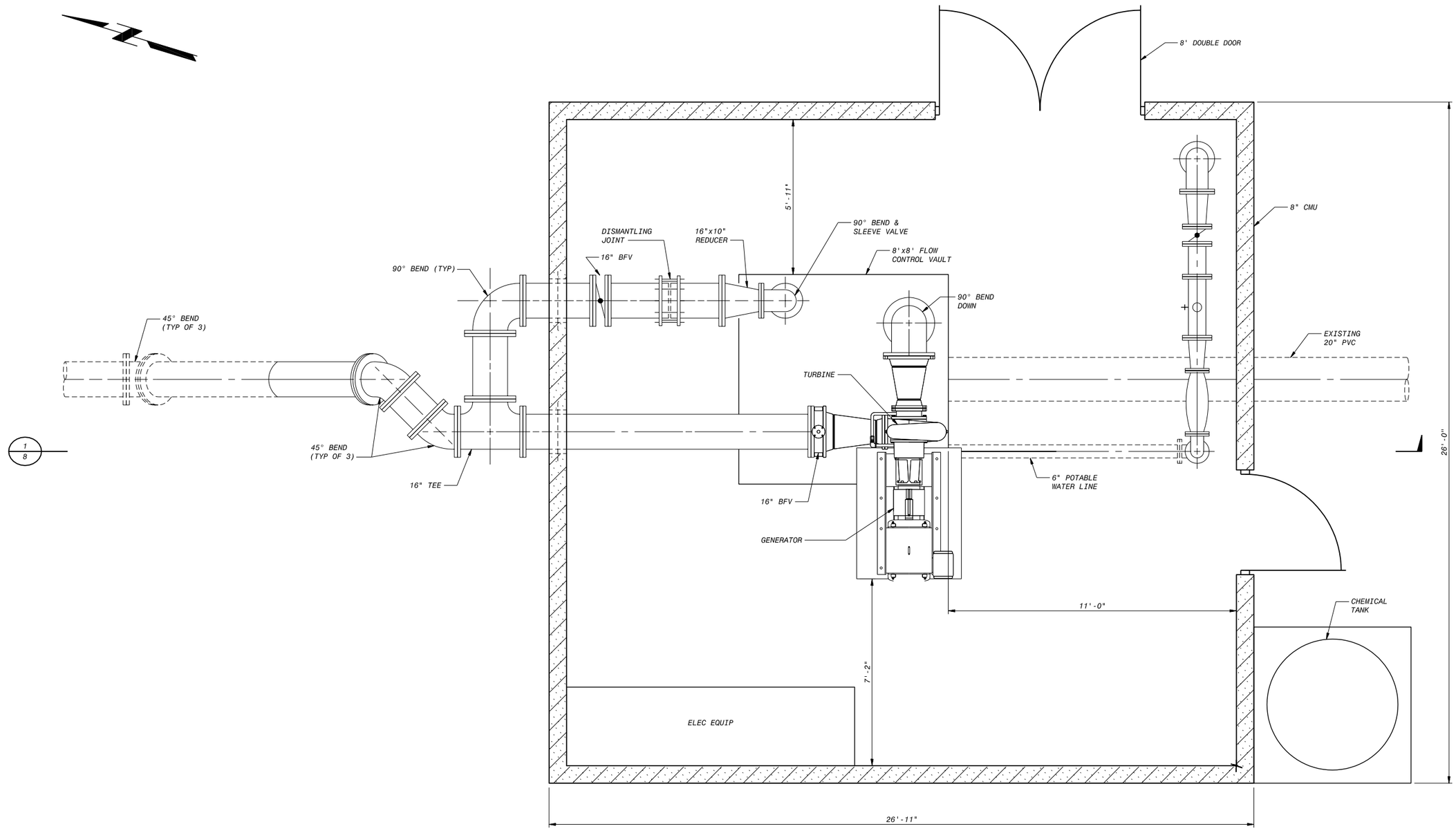

1/8

PLAN
1/4" = 1'-0"

PRELIMINARY - NOT FOR CONSTRUCTION

NO.	BY	CK	APP

REVISIONS AND RECORD OF ISSUE

DATE
CYGNET ID:
WF:
SAVED: GLA36511, 6/4/2010 2:52:11 PM
PLOTTED: GLA36511, 6/1/2010 4:39:25 PM
USER: GLA36511

XREF1:
XREF2:
XREF3:
XREF4:
XREF5:
DWG VER:

BLACK & VEATCH Corporation
San Marcos, California

WR-34 HYRDOELECTRIC POWER GENERATION FACILITY
PRE-DESIGN EVALUATION

PUMP TURBINE
POWER HOUSE PLAN

DESIGNED: CVT
DETAILED: JEG
CHECKED: VT
APPROVED:
DATE:

0 1/2 1
IF THIS BAR DOES NOT MEASURE 1" THEN DRAWING IS NOT TO FULL SCALE

PROJECT NO.
167668

FIGURE 7
SHEET
7 OF 9

FD6000
D6000

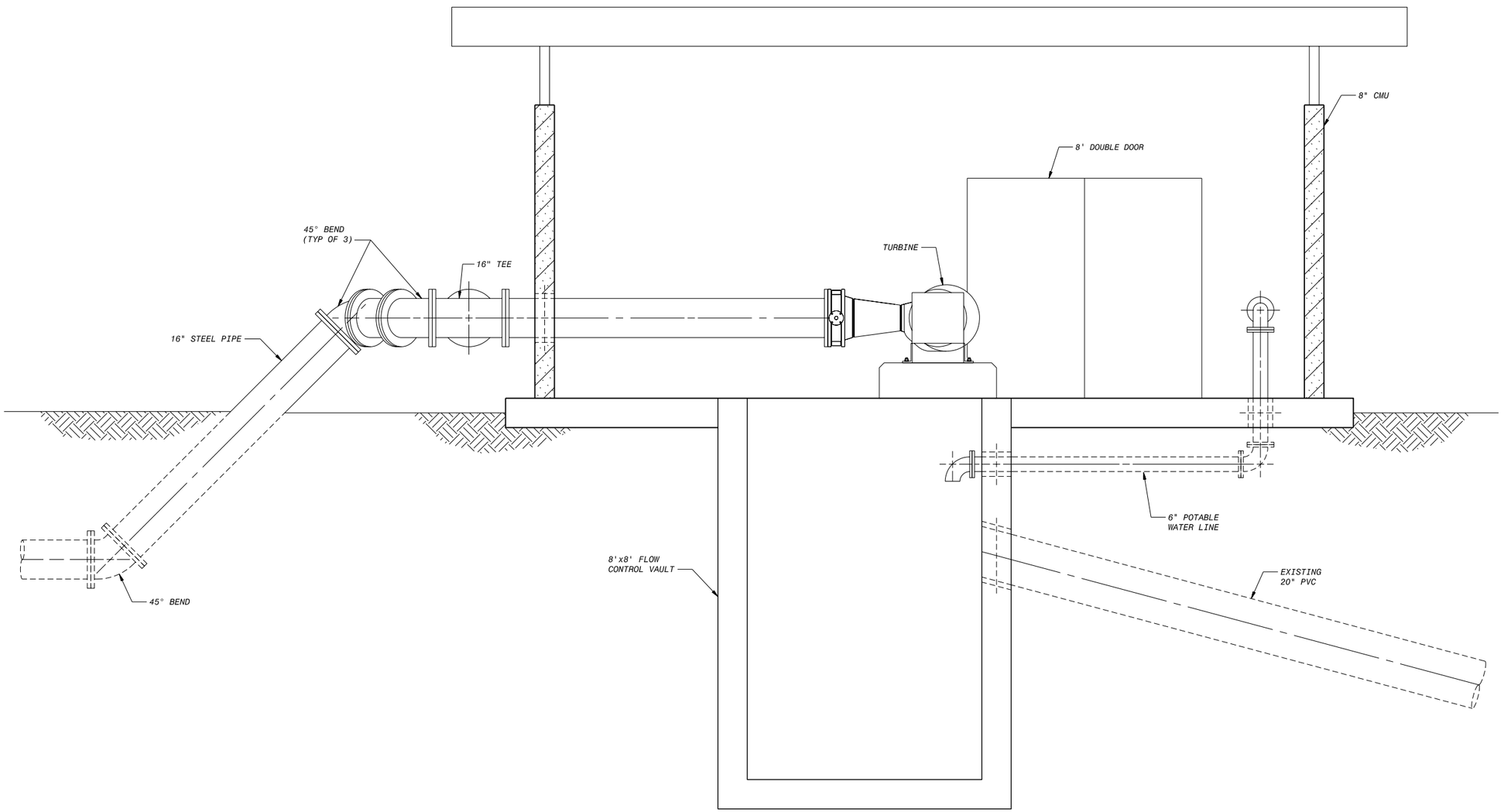

SECTION 1/3
1/4" = 1'-0"

PRELIMINARY - NOT FOR CONSTRUCTION

NO.	BY	CK	APP

DATE REVISIONS AND RECORD OF ISSUE

CYGNET ID: XREF1:
WF: XREF2:
SAVED: GLA36511, 6/4/2010 2:56:29 PM XREF3:
PLOTTED: GLA36511, 6/4/2010 2:56:39 PM XREF4:
USER: GLA36511 DWG VER: XREF5:

BLACK & VEATCH Corporation
San Marcos, California

WR-34 HYRDOELECTRIC POWER GENERATION FACILITY
PRE-DESIGN EVALUATION

PUMP TURBINE
POWER HOUSE SECTION

DESIGNED: CVT
DETAILED: JEG
CHECKED: VT
APPROVED:
DATE:

0 1/2 1
IF THIS BAR DOES NOT MEASURE 1" THEN DRAWING IS NOT TO FULL SCALE

PROJECT NO.
167668

FIGURE 8
SHEET
8 OF 9

FD6000
D6000

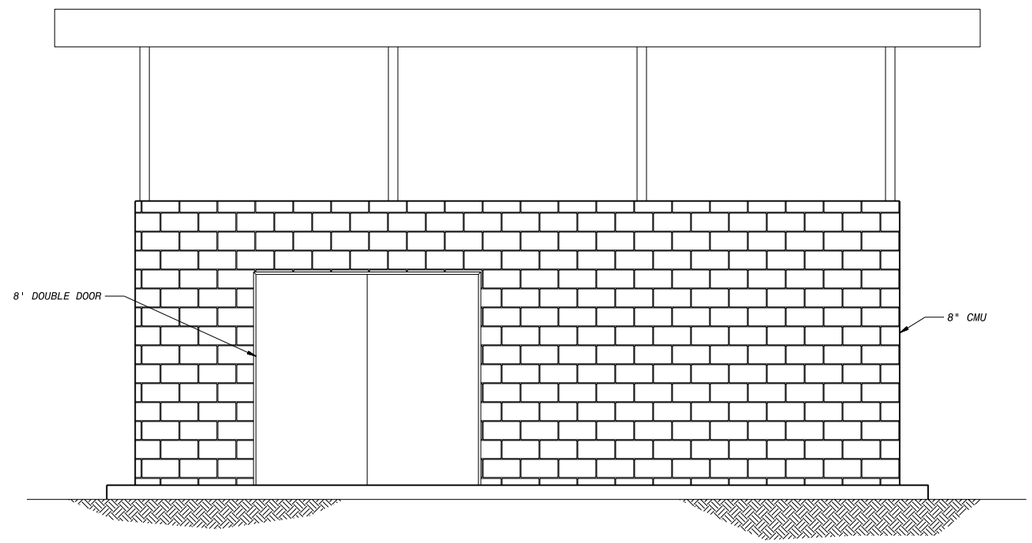

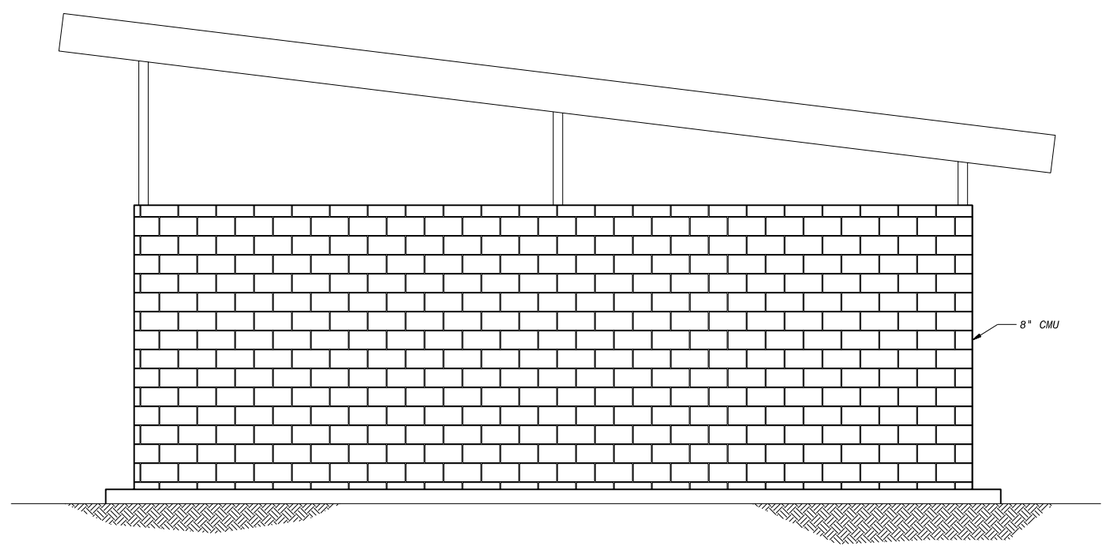

ELEVATIONS
3/16" = 1'-0"

PRELIMINARY - NOT FOR CONSTRUCTION

DATE	REVISIONS AND RECORD OF ISSUE	NO.	BY	CK	APP

CYGNET ID:
WF:
SAVED: GLA36511, 6/4/2010 3:05:48 PM
PLOTTED: GLA36511, 6/4/2010 3:05:52 PM
USER: GLA36511
XREF1:
XREF2:
XREF3:
XREF4:
XREF5:
DWG VER:

BLACK & VEATCH Corporation
San Marcos, California

WR-34 HYRDOELECTRIC POWER GENERATION FACILITY
PRE-DESIGN EVALUATION

PUMP TURBINE
POWER HOUSE ELEVATION

DESIGNED: CVT
DETAILED: JEG
CHECKED: VT
APPROVED:
DATE:

0 1/2 1
IF THIS BAR DOES NOT MEASURE 1" THEN DRAWING IS NOT TO FULL SCALE

PROJECT NO.
167668

FIGURE 9
SHEET
9 OF 9

FD6000
D6000