Supporting Documents

Att3_IG1_ARB_Workplan_8of10 includes the following:

Project No.	Project Name	Supporting Documentation Included	Notes
10	Coyle Avenue and Roseview Park Pump Stations and Treatment Systems Project	Project Manual for Construction, Development and Testing of the Roseview Park (N37) and the Coyle (N38) Wells	The design of the well portion of the proposed project has already been completed. This project manual forms the basis for the bid package that was released in December 2010.
		Verner Avenue Well and Treatment Facilities Plans and Specifications	The pump station and treatment systems portion of the project will be very similar to the previously constructed Verner Avenue Well and Treatment Facilities Project. Plans and specs for the Verner Avenue Well project have been included.
11	Willow Hill Pipeline Rehabilitation Project	Underground Solutions Fusible PVC Folsom RCP Slipeline Budgetary Proposal and Technical Submittal	The rehabilitation method is likely to be sliplining using fusible PVC. A proposal and technical specifications for a previous fusible pvc sliplining project has therefore been included.
		Fusible PVC Pipe Material Specification	
		Proposal for a Two Year Water Loss Control Program for the City of Folsom Utilities Department	Two Year Water Loss Control Program Outline (WSO Inc., March 2010) identified and prioritized distribution system leaks and repairs
12	Lower American River Mile 0.5 Aquatic Riparian Habitat Enhancement Project	Sacramento River Bank Protection Project American River RM 0.5R Mitigation Site Final Plans and Specifications	The final plans and specifications for the proposed project are included.

Project Manual for Construction, Development and Testing of the Roseview Park (N37) and the Coyle (N38) Wells

SACRAMENTO SUBURBAN WATER DISTRICT

PROJECT MANUAL

For Construction, Development and Testing of the Roseview Park (N37) and the Coyle (N38) Wells

December 2010

BROWN AND CALDWELL

Sacramento, California

SACRAMENTO SUBURBAN WATER DISTRICT

PROJECT MANUAL

For Construction, Development and Testing of the Roseview Park (N37) and the Coyle (N38) Wells

PROFESSIONAL ENGINEER
KENNETH W. WORST
AG000474
EXP 9/30/13
AGRICULTURAL
STATE OF CALIFORNIA

REGISTERED PROFESSIONAL ENGINEER
CHRISTINA BROWN
NO. C059194
Exp 6/30/11
CIVIL
STATE OF CALIFORNIA

December 2010

BROWN AND CALDWELL

Sacramento, California

TABLE OF CONTENTS

PART A – BIDDING and CONTRACT DOCUMENTS

Section **Title**

1 BIDDING REQUIREMENTS
- 1.1 INVITATION TO BID
- 1.2 BID
- 1.3 DESIGNATION OF SUBCONTRACTORS
- 1.4 BID BOND
- 1.5 EXPERIENCE QUALIFICATIONS
- 1.6 NONCOLLUSION DECLARATION

2 CONTRACT FORMS
- 2.1 CONTRACT
- 2.2 FAITHFUL PERFORMANCE BOND
- 2.3 PAYMENT BOND
- 2.4 CONTRACTOR'S CERTIFICATE REGARDING WORKER'S COMPENSATION

3 ABBREVIATIONS AND DEFINITIONS
- 3.1 ABBREVIATIONS
- 3.2 DEFINITIONS

4 INSTRUCTIONS TO BIDDERS
- 4.1 INTRODUCTION
- 4.2 PLANS
- 4.3 LOCAL CONDITIONS
- 4.4 FORM OF BID AND SIGNATURE
- 4.5 SUBMISSION OF BIDS
- 4.6 PREPARATION OF THE BID
- 4.7 BID GUARANTEE
- 4.8 LIST OF SUBCONTRACTORS; SUBCONTRACTING LIMITS.
- 4.9 INTERPRETATION OF CONTRACT DOCUMENTS
- 4.10 MODIFICATION OF BIDS
- 4.11 WITHDRAWALS OF BIDS
- 4.12 DISCREPANCIES
- 4.13 SERVICING AND MAINTENANCE
- 4.14 DISQUALIFICATION OF BIDDERS
- 4.15 AWARD OF CONTRACT
- 4.16 CONTRACT BONDS
- 4.17 EXECUTION OF CONTRACT
- 4.18 RETURN OF BID GUARANTEES
- 4.19 POWER OF ATTORNEY
- 4.20 TIME OF COMPLETION
- 4.21 LICENSING REQUIREMENTS FOR CONTRACTORS
- 4.22 PREVAILING WAGES

4.23 BID PROTEST
4.24 INELIGIBLE CONTRACTORS AND SUBCONTRACTORS
5 GENERAL CONDITIONS
5.1 INTENT OF CONTRACT DOCUMENT
5.2 CONTRACTOR'S UNDERSTANDING
5.3 CHANGES IN THE WORK
5.4 CONTRACTOR CLAIMS FOR EXTRA COSTS AND TIME EXTENSIONS
5.5 SPECIAL LITIGATION PROVISIONS
5.6 LARGE CLAIM RESOLUTION
5.7 GUARANTEE
5.8 AUTHORITY OF THE ENGINEER
5.9 DRAWINGS
5.10 CONSTRUCTION STAKING AND SURVEYS
5.11 PERMITS AND REGULATIONS
5.12 CONFORMITY WITH CONTRACT DOCUMENTS
5.13 COORDINATION AND INTERPRETATION OF CONTRACT DOCUMENTS
5.14 SUBCONTRACTS
5.15 COOPERATION OF CONTRACTORS
5.16 SUPERINTENDENCE
5.17 INSPECTION OF WORK
5.18 TESTS
5.19 REMOVAL OF REJECTED AND UNAUTHORIZED WORK AND MATERIALS
5.20 DEDUCTIONS FOR UNCORRECTED WORK
5.21 EQUIPMENT AND PLANTS
5.22 CHARACTER OF WORKER
5.23 SEPARATE CONTRACTS
5.24 MATERIALS
5.25 STORAGE OF MATERIALS; STORAGE AREAS
5.26 TRADE NAMES AND ALTERNATIVES
5.27 CERTIFICATES OF COMPLIANCE
5.28 ASSIGNMENT
5.29 USE OF COMPLETED PORTIONS, RIGHT TO OPERATE UNSATISFACTORY EQUIPMENT OR FACILITIES
5.30 LANDS FOR WORK, RIGHT-OF-WAY CONSTRUCTION ROADS, TEMPORARY UTILITY SERVICES
5.31 PROGRESS SCHEDULE
5.32 COMMENCEMENT AND PROGRESS OF THE WORK AND TIME OF COMPLETION/CONSTRUCTION SEQUENCE
5.33 SUSPENSION OF WORK
5.34 TERMINATION FOR DEFAULT - DAMAGES FOR DELAY - TIMELY EXTENSION
5.35 RIGHTS OF DISTRICT UPON TERMINATION
5.36 FAILURE TO COMPLETE THE WORK IN THE TIME AGREED UPON LIQUIDATED DAMAGES

5.37 CLEAN-UP
5.38 COMPLIANCE WITH LAWS; PERMITS; TAXES
5.39 PREVAILING WAGE, AND TRAVEL AND SUBSISTENCE PAY
5.40 LABOR DISCRIMINATION
5.41 EIGHT-HOUR DAY LIMITATION
5.42 EMPLOYMENT OF APPRENTICES
5.43 WATER POLLUTION
5.44 PATENTS
5.45 PUBLIC CONVENIENCE
5.46 UNDERGROUND UTILITIES
5.47 SAFETY AND TRENCHING
5.48 PROTECTION OF PERSON AND PROPERTY
5.49 RESPONSIBILITY FOR REPAIR OF FACILITIES
5.50 DISTRICT'S REPAIR
5.51 CONTRACTOR'S LICENSE NOTICE
5.52 INSURANCE
5.53 INDEMNITY AND LITIGATION COST
5.54 PROTECTION OF WORK
5.55 ACCIDENTS
5.56 NO PERSONAL LIABILITY
5.57 MEASUREMENT OF QUANTITIES
5.58 SCOPE OF PAYMENT
5.59 PROGRESS ESTIMATE
5.60 PROGRESS PAYMENTS
5.61 FINAL ACCEPTANCE AND DATE OF COMPLETION
5.62 FINAL PAYMENT
5.63 FINAL RELEASE
5.64 RIGHT TO WITHHOLD PAYMENTS
5.65 WAIVER OF INTEREST
5.66 SATISFACTION OF CLAIMS AND LIENS
5.67 ASSIGNMENT
5.68 AVAILABILITY OF INFORMATION
5.69 HAZARDOUS MATERIALS
5.70 INTEGRATION
5.71 WAIVER
5.72 REMEDIES NOT EXCLUSIVE
5.73 SEVERABILITY
5.74 GOVERNING LAW AND VENUE
5.75 NOTICES

PART B – TECHNICAL SPECIFICATIONS

Section	Title
02671	Water Wells
02672	Test Hole Drilling
02674	Well Geophysical Logging
02675	Water Quality Sampling (Coyle Well Only)
02676	Temporary Stabilization of Test Hole
02677	Well Surface Casing
02678	Production Well Drilling and Caliper Survey
02679	Well Casing and Screen
02680	Gravel Pack, Intermediate Seals, and Grout Seal
02681	Plumbness Test, Alignment Test and Well Development
02682	Step Drawdown, Constant Rate Tests, and Recovery Survey
02683	Television Well Survey, Well Disinfection and Capping

PART C – FIGURES

Figure No.	Title
F – 1	Regional Location
F – 2	Location of Project Sites
F – 3	Roseview Park Well Site Layout
F – 4	Coyle Well Site Layout

PART A – BIDDING and CONTRACT DOCUMENTS

1 BIDDING REQUIREMENTS

1.1 INVITATION TO BID

Sealed Proposals will be received at the Brown and Caldwell office, 1590 Drew Avenue, Suite 210, Davis, California, 95618 on behalf of Sacramento Suburban Water District (District) until 2 p. m. local time on December 22, 2010, or such later date as may be set by addendum.

The proposed work consists of the following: **Construction, Development and Testing of the Roseview Park (N37) and Coyle (N38) Wells**

The Contract Documents, including the Instructions to Bidders and the plans and specifications, for the work, may be examined at the office of the District Representative, Brown and Caldwell, 1590 Drew Avenue, Suite 210, Davis , California (530-204-5214). The Bidder's attention is directed to the Instructions to Bidders for complete instructions regarding submission of a bid.

Each Bid must be submitted on the prescribed forms and accompanied by cash, a cashier's check, certified check or bid bond executed on the prescribed form payable to the District in an amount not less than 10 percent of the amount bid.

The successful bidder will be required to furnish a payment bond and faithful performance bond each in the full amount of the Contract price, and insurance with certificates of insurance , as provided in the Contract Documents. The required bonds must be provided only by a surety insurer that is duly admitted by the Insurance Commissioner of the State of California.

Bidders are hereby notified that in accordance with Public Contract Code section 22300, securities may be substituted for any monies that the District may withhold pursuant to the terms of this Contract to ensure performance.

The successful bidder must possess the following classification or type of contractor's license issued by the State Contractor's License Board: C57 .

The attention of bidders is directed to the requirements and conditions of employment to be observed and prevailing wage rates to be paid under the Contract.

The District reserves the right to reject all bids. Any bid not conforming to the intent and purpose of the Contract Documents may be rejected. The District may extend the time to award the Contract for a period of time which shall not extend beyond 60 days from the bid opening date.

Dated this 14th day of December 2010.

DISTRICT REPRESENTATIVE

By: Ken Wonster

Ken Wonster [name]

Project Manager [title]

1.2 BID

TO: DISTRICT

The undersigned states and declares as follows:

That the Bidder has carefully examined the location of the proposed work; that the Bidder has examined the Contract Documents entitled: **Construction, Development and Testing of the Roseview Park (N37) and Coyle (N38) Wells**; that the Bidder has read the accompanying Instructions to Bidders; that the Bidder hereby proposes to begin work and complete the project in accordance with the schedule and deadlines in the Contract Documents; that the Bidder hereby proposes to furnish all labor, materials, tools, and equipment, and to perform all the work required, complete in place, in accordance with the Contract Documents; and that the Bidder will take in full payment for such work the prices set forth in the accompanying bid schedule.

The Bidder acknowledges that the following quantities are approximate only, being given as a basis for the comparison of proposals, that the District does not expressly or by implication agree that the actual amount of work will correspond therewith, and that the District reserves the right to increase or decrease the amount of any class or portion of the work, as may be deemed necessary or advisable by the Engineer.

The following surety or sureties have agreed to furnish payment and faithful performance bonds to the Bidder if it is awarded the contract:

Faithful Performance Bond: _____

Payment Bond: _____

The undersigned hereby acknowledges the receipt and review of addenda nos. _____.

Contractor's License No.: _____
Expiration Date: _____
Type of license: _____
Name under which license is held: _____
Status of license: _____

Executed on _____, 20__, at _____, _____.

The Bidder's authorized officer identified below hereby declares that the representations in this Bid are true and correct and of my own personal knowledge, and that these representations are made under penalty of perjury under the laws of the State of California.

BIDDER

_____ [Company/firm name]

_____ [Capacity of company or firm, e.g., corporation (include state of incorporation), sole proprietor, partnership]

_____ [Authorized signature]

_____ [Name]

_____ [Title]

Address: _____

_____

_____

Phone No.: _____

Fax No.: _____

E-Mail (if any):_____

BID SCHEDULE

Bid items 1 through 50 include all work set forth under the contract. Bid prices shall include everything necessary for the completion of the work including, but not limited to, providing the materials, equipment, tools, plant and other facilities, and the management, superintendence, labor and services. Bid prices shall include allowance for federal, state and local taxes.

In the event that the product of a unit price and an estimated quantity does not equal the extended amount quoted, the unit price shall govern, and the correct product of the unit price and the estimated quantity shall be deemed to be the amount bid. If the sum of two or more items in a bidding schedule does not equal the total amounts quoted, the individual item amounts shall govern and the correct total shall be deemed to be the amount bid. The total amount bid shall be determined by the addition of all price items.

Abbreviations used in the Bid Schedule are defined as follows:

LF -- linear feet
LS -- lump sum
CY – cubic yard
EA -- each
HR -- hour

Roseview Park (N37) Well

Item No.	Estimated Quantity	Description	Unit Price	Est. Quantity x Unit Price
1	1	Mobilization/demobilization	Lump Sum	$_____
2	500 L.F.	Drill 7-inch test hole	$_____/L. F	$_____
3	1	Geophysical Logging	Lump Sum	$_____
4	500 L.F	Temporary test hole stabilization	$_____/L. F	$_____
5	70 L.F.	36-inch surface casing	$_____/L. F	$_____
6	420 L.F.	Drill 32-inch borehole	$_____/L. F	$_____
7	1	Caliper log	Lump Sum	$_____
8	262 L.F.	F&I 18-inch x 5/16-inch blank casing	$_____/L. F	$_____
9	210 L.F.	F&I 18-inch x 5/16-inch louvered casing	$_____/L. F	$_____
10	202 L.F.	F&I 4-inch gravel feed pipe	$_____/L. F	$_____
11	212 L.F.	F&I 4-inch sounding pipe	$_____/L. F	$_____
12	290 L.F.	F&I Gravel pack filter materials	$_____/L. F	$_____
13	20 L.F.	F&I Intermediate seals	$_____/L. F	
14	180 L.F.	F&I Grout seal	$_____/L. F	$_____
15	42 Hours	Airlift swabbing	$_____/Hour	$_____
16	1	Install/remove test pump	Lump Sum	$_____
17	80 Hours	Development and test pumping	$_____/Hour	$_____
18	1	Final water quality testing	Lump Sum	$_____
19	1	Plumbness and alignment testing	Lump Sum	$_____
20	1	Television well survey	Lump Sum	$_____
21	1	Disinfection and capping	Lump Sum	$_____
22	1	Clean up	Lump Sum	$_____
23	12 Hours	Well N37standby time	$_____/Hour	$_____
24	*****	**Roseview Park Well Est. Cost**	**Subtotal Est. Cost**	$_____

COYLE (N38) Well

Item No.	Estimated Quantity	Description	Unit Price	Est. Quantity x Unit Price
25	1	Mobilization/demobilization	Lump Sum	$_____
26	380 L.F.	Drill 12-inch test hole	$_____/L. F	$_____
27	1	Geophysical Logging	Lump Sum	$_____
28	3	Isolated water quality sampling and testing	$_____/Each	$_____
29	180 L.F.	Temporary test hole stabilization	$_____/L. F	$_____
30	70 L.F.	36-inch surface casing	$_____/L. F	$_____
31	310 L.F.	Drill 32-inch borehole	$_____/L. F	$_____
32	1	Caliper log	Lump Sum	$_____
33	282 L.F.	F&I 18-inch x 3/8-inch blank casing	$_____/L. F	$_____
34	90 L.F.	F&I 18-inch x 5/16-inch louvered casing	$_____/L. F	$_____
35	182 L.F.	F&I 4-inch gravel feed pipe	$_____/L. F	$_____
36	192 L.F.	F&I 4-inch sounding pipe	$_____/L. F	$_____
37	200 L.F.	F&I Gravel pack filter materials	$_____/L. F	$_____
38	20 L.F.	F&I Intermediate seals	$_____/L. F	$_____
39	160 L. F	F&I Grout seal	$_____/L. F	$_____
40	36 Hours	Airlift swabbing	$_____/Hour	$_____
41	1	Install/remove test pump	Lump Sum	$_____
42	80 Hours	Development and test pumping	$_____/Hour	$_____
43	1	Final water quality testing	Lump Sum	$_____
44	1	Plumbness and alignment testing	Lump Sum	$_____
45	1	Television well survey	Lump Sum	$_____
46	1	Disinfection and capping	Lump Sum	$_____
47	1	Clean up	Lump Sum	$_____
48	12 Hours	N38 standby time	$_____/Hour	$_____
49	********	**Coyle Well Est. Cost**	**Subtotal Est. Cost**	**$_____**

50	--	**Roseview Park and Coyle Well Total Estimated Cost**	**EST. TOTAL COST**	**$**_____

A) The production wells' construction details have been estimated for proposal purposes. Final well construction dimensions will be determined from test hole data.

B) Where lump sum prices are in the bidding schedule, they shall include all labor, materials and equipment necessary to produce a complete and finished job.

C) When no specific item is listed in the bidding schedule for work required, the cost of such work shall be included in the price bid for the item which most appropriately covers the work.

Project Start Date: _____

1.3 DESIGNATION OF SUBCONTRACTORS

In compliance with Public Contract Code section 4100 et seq. each bidder shall set forth below the (a) name and location of the mill, shop, or office of each subcontractor who will perform work or labor or render service to the Contractor in or about the construction of the work or improvement to be performed under these specifications in excess of 2 of 1% of the Contractor's total bid, (b) description of the type of work to be performed by each such subcontractor, and (c) portion of the work (expressed in dollar amount) that will be performed by each such subcontractor.

If the Contractor fails to specify a subcontractor for any portion of the work to be performed under the Contract, it shall be deemed to have agreed to perform such portion itself, and it shall not be permitted to subcontract that portion of the work except under the conditions hereinafter set forth.

Subletting or subcontracting of any portion of the work in excess of 2 of 1% of the Contractor's total bid as to which no subcontractor was designated in the original bid shall only be permitted in cases of public emergency or necessity, and then only after a finding reduced to writing as a public record of the District setting forth the facts constituting the emergency or necessity.

Subcontractor (name and location)	**Description of Subcontractor Work**	**Portion of Work (in $)**

1.4 BID BOND

KNOW ALL MEN BY THESE PRESENTS, THAT WE, THE UNDERSIGNED _____ _____, Contractor as Principal; and _____ _____, as Surety, are hereby held and bound unto Sacramento Suburban Water District, hereinafter called the District, in the sum of $_____, which sum is equal to at least ten percent of the total amount of the Bid, payment of which sum, well and truly to be made, we hereby jointly and severally bind ourselves, our heirs, executors, administrators, successors, and assigns.

The condition of the above obligation is such that whereas the Principal has submitted to the District a certain Bid, attached hereto and hereby made a part hereof, to enter into a Contract in writing, for the construction of the following public works project:

NOW, THEREFORE,

(a) If the Bid is rejected, or in the alternate,

(b) If the Bid is accepted and the Principal shall sign and deliver a Contract, in the form of the Contract attached hereto and shall execute and deliver Performance and Payment Bonds in the forms attached hereto and shall deliver proof of insurance (all completed in accordance with the Contract Documents), and shall in all other respects perform the agreement created by the acceptance of the Bid;

Then, this obligation shall be void, otherwise the same shall remain in force and effect; it being expressly understood and agreed that the liability of the Surety for any and all default of the Principal hereunder shall be the amount of this obligation as herein stated.

The Surety, for value received, hereby stipulates and agrees that the obligations of said Surety and its bond shall be in no way impaired or affected by any extension of the time within which the District may accept such Bid, and said Surety does hereby waive notice of any such extension.

IN WITNESS THEREOF, the above-bounded parties have executed this instrument under their several seals this _____ day of _____ 20__, the name and corporate seal of each corporate party being hereto affixed and those presents duly signed by its undersigned representative, pursuant to authority of its governing body.

_____
(Contractor as Principal)

(Seal)

By: _____

_____ [Name]

_____ [Title]

_____
(Surety)

(Seal)

By: _____

_____ [Name]

_____ [Title]

1.5 EXPERIENCE QUALIFICATIONS

The Bidder has been engaged in the contracting business, under the present business name for ____ years. Experience in work of a nature similar to that covered in the Bid extends over a period of _____ years.

The Bidder, as a contractor, has never failed to satisfactorily complete a contract awarded to it, except as follows:

The following contracts have been satisfactorily completed in the last three years for the persons, firm or entity indicated:

Year	Owner	Type of Work	Contract Amount

The following is a list of plant and equipment owned by the Bidder, which is definitely available for use on the proposed work as required.

Quantity	Name, Type and Capacity	Condition	Location

Executed on _____, 20___, at _____.

I declare under penalty of perjury under the laws of the State of California that the foregoing is true and correct.

BIDDER

_____ [Company/firm name]

_____ [Authorized signature]

_____ [Name]

_____ [Title]

1.6 NONCOLLUSION DECLARATION:

The following noncollusion declaration must be submitted with the Bid:

I, _____, declare that I am _____ of _____ the party making the foregoing bid that the bid is not made in the interest of, or on behalf of, any undisclosed person, partnership, company, association, organization, or corporation; that the bid is genuine and not collusive or sham; that the bidder has not directly or indirectly induced or solicited any other bidder to put in a false or sham bid, and has not directly or indirectly colluded, conspired, connived, or agreed with any bidder or anyone else to put in a sham bid, or that anyone shall refrain from bidding; that the bidder has not in any manner, directly or indirectly, sought by agreement, communication, or conference with anyone to fix the bid price of the bidder or any other bidder, or to fix any overhead, profit, or cost element of the bid price, or of that of any other bidder, or to secure any advantage against the public body awarding the contract of anyone interested in the proposed contract; that all statements contained in the bid are true; and, further, that the bidder has not, directly or indirectly, submitted its bid price or any breakdown thereof, or the contents thereof, or divulged information or data relative thereto, or paid, and will not pay, any fee to any corporation, partnership, company association, organization, bid depository, or to any member or agent thereof to effectuate a collusive or sham bid.

Executed on _____, 20___, at _____.

I declare under penalty of perjury under the laws of the State of California that the foregoing is true and correct.

BIDDER

_____ [Company/firm name]

_____ [Authorized signature]

_____ [Name]

_____ [Title]

2 CONTRACT FORMS

2.1 CONTRACT

THIS CONTRACT is made as of _____, 20 _____ in _____ _____, California, by and between _____ ("District"), and _____, a _____ _____ [insert capacity of Contractor, e.g., a California corporation, partnership or a sole proprietorship] ("Contractor"), who agree as follows:

2.1.1 The Contractor agrees to furnish all labor, materials, supplies, tools and equipment and to perform all the work required to construct and complete in a good and workmanlike manner, and in strict accordance with the Contract Documents, those certain improvements entitled:

2.1.2 Contract Documents for this project have been prepared by the District's Engineer, _____, hereinafter called the Engineer. All Contract Documents, and each and every provision thereof, relating to this Contract are hereby made a part of and incorporated by reference into this Contract. The Contract Documents include the Invitation to Bid, Bid, Bid Bond, Designation of Subcontractors, Experience Qualifications, Noncollusion Declaration, Instructions to Bidders, Contract, Faithful Performance Bond, Payment Bond, Contractor's Certificate Regarding Worker's Compensation, the Insurance Certificates and Endorsements, Abbreviations and Definitions, General Conditions, Technical Specifications and Plans (Drawings), and _____ _____, applicable to this work, and all Addenda and Change Orders, as well as all written modifications of the Contract Documents agreed to by the parties. Any work called for in one Contract Document and not mentioned in others is to be performed and executed as if mentioned in all Contract Documents.

2.1.3 The District agrees to pay the Contractor for the performance of the Contract, subject to additions and deductions provided therein, the following prices, and the Contractor agrees to receive and accept the following prices as full compensation for furnishing all materials, labor, supplies, tools and equipment, and for doing all the work contemplated and embraced in this Contract, and for all risks of every description connected with the work and for all expenses incurred by or in consequence of the suspension or discontinuance of the work, and for well and faithfully completing the work and the whole thereof in the manner and according to the Contract Documents and the requirements of the Engineer under them, namely: _____ _____ (bid items and prices to be listed here).

2.1.4 The District shall make payments on the account of the Contract as specified in the General Conditions of the Contract.

2.1.5 The Contractor shall diligently prosecute the work to completion in

accordance with the following schedule: 120 calendar days from Notice to Proceed.

2.1.6 The Contractor acknowledges that it has examined the prevailing rate of per diem wages as established and published by the California Director of Industrial Relations, copies of which are available for inspection at the office of the District. The Contractor agrees to pay workers not less than the applicable prevailing rate of per diem wages, as the same may be amended from time to time. The Contractor shall post at each job site a copy of the determination of the Director of Industrial Relations of the prevailing rate of per diem wages.

IN WITNESS WHEREOF, the parties execute this Contract as follows:

DISTRICT	CONTRACTOR
By: _____ President, Board of Directors	_____ [Authorized signature]
	_____ [Name]
	_____ [Title]

Attest:

By: _____
Secretary, Board of Directors

2.2 FAITHFUL PERFORMANCE BOND

KNOW ALL MEN BY THESE PRESENTS,

THAT, WHEREAS, Sacramento Suburban Water District, hereinafter designated as the "District," entered into a Contract with _____, hereinafter designated as the "Contractor" for the work described as follows: _____ _____.

WHEREAS, the Contractor is required under terms of the Contract to furnish a bond for the faithful performance of the Contract;

WHEREAS, the Contract is by reference made a part hereof;

NOW, THEREFORE, we, the undersigned Contractor, as Principal, and _____ _____ (corporate surety), a corporation organized and existing under the laws of the State of _____, and duly authorized to transact business under the laws of the State of California, as an admitted Surety, are held and firmly bound unto the District in the penal sum of $_____, the sum being not less than one hundred percent (100%) of the total Contract amount, for the payment of which sum well and truly to be made, we bind ourselves, our heirs, executors, administrators, and successors, jointly and severally, firmly by these presents.

THE CONDITION OF THIS OBLIGATION IS SUCH, THAT, if the above bounden Contractor, its heirs, executors, administrators, successors or assigns, shall in all things stand to and abide by, and well and truly keep and perform the covenants, conditions, and agreements in the Contract and any alterations thereof made as therein provided, on its part, to be kept and performed at the time and in the manner therein specified, and in all respects according to their true intent and meaning, and shall indemnify and save harmless the District, its directors, officers, employees and agents, as therein stipulated, then this obligation shall become null and void; otherwise it shall be and remain in full force and effect.

As a condition precedent to the satisfactory completion of the said Contract, the above obligation in above-stated amount shall hold good for a period of one (1) year after the recording of the notice of completion, during which time if the Contractor, its heirs, executors, administrators, successors or assigns shall fail to make full, complete, and satisfactory repair and replacements or totally protect the District from loss or damage made evident during the period of one (1) year from the date of recording of the notice of completion, and resulting from or caused by defective materials or faulty workmanship in the prosecution of the work done, the above obligation in the above-stated amount shall remain in full force and effect. However, anything in this paragraph to the contrary notwithstanding, the obligation of the Surety hereunder shall continue so long as any obligation of the Contractor remains.

The Surety, for value received, hereby stipulates and agrees that no change, extension of time, alteration or addition to the terms of the Contract or to the work to be performed thereunder or the specifications accompanying the same shall, in any way, affect its obligations on this bond and it

does hereby waive notice of any such change, extension of time, alteration, or addition to the terms of the Contract or to the work or to the specifications. The Surety hereby waives the provisions of Sections 2819 and 2845 of the Civil Code of the State of California.

In the event suit is brought upon this bond by the District and judgment is recovered, the Surety shall pay all costs incurred by the District in such suit, including, but not limited to, administrative and consultant costs, and reasonable attorneys' fees to be fixed by the Court.

The address or addresses at which the principal and surety(ies) may be served with notices, papers and other documents under the California Bond and Undertaking Law (Code of Civil Procedure section 995.010 et seq.) is the following:

_____

_____.

IN WITNESS WHEREOF, we have hereunto set our hands and seals this _____day of ___ _____, 20___.

_____
(Contractor as Principal)

(Seal)

By: _____

_____ [Name]

_____ [Title]

_____
(Surety)

(Seal)

By: _____

_____ [Name]

_____ [Title]

NOTE: Date of bond must not be prior to date of Contract. If Contractor is partnership, all partners should execute bond.

2.3 PAYMENT BOND

KNOW ALL MEN BY THESE PRESENTS,

THAT, WHEREAS, the Sacramento Suburban Water District, hereinafter designated as the "District," has awarded to _____ hereinafter designated as the "Contractor" a Contract for the work described as follows: _____ _____ _____; and

WHEREAS, the Contractor is required by the Contract and by the provisions of Division Third, Part 4, Title 15, Chapter 7 of the Civil Code to furnish a bond in connection with the Contract, as hereinafter set forth.

WHEREAS, the Contract by this reference is made a part hereof;

NOW, THEREFORE, we, _____ _____ the undersigned Contractor, as Principal, and _____ _____, a corporation organized and existing under the laws of the State of _____duly authorized to transact business under the laws of the State of California, as an admitted Surety, are held and firmly bound unto the District in the sum of $_____ the sum being not less than one hundred percent (100%) of the total Contract amount payable by the District, under the terms of the Contract, for which payment well and truly to be made, we bind ourselves, our heirs, executors and administrators, successors and assigns, jointly and severally, firmly by these presents.

THE CONDITION OF THIS OBLIGATION IS SUCH, THAT, if the Contractor, its heirs, executors, administrators, successors, assigns or subcontractors shall fail to pay for any materials, provisions, provender or other supplies or teams, implements or machinery used in, upon, for or about the performance of the work contracted to be done, or shall fail to pay for any work or labor thereon of any kind, or shall fail to pay any of the persons named in Civil Code Section 3181, or shall fail to pay for amounts due under the Unemployment Insurance Code with respect to such work or labor as required by the provisions of Division Third, Part 4, Title 15, Chapter 7 of the Civil Code, or shall fail to pay for any amounts required to be deducted, withheld, and paid over to the Employment Development Department from the wages of employees of the Contractor and subcontractors pursuant to Section 13020 of the Unemployment Insurance Code with respect to such work or labor, and provided that the claimant shall have complied with the provisions of that Code, the Surety or Sureties hereon will pay for the same in amount not exceeding the sum specified in the Contract, otherwise the above obligation shall be void. In case suit is brought upon this bond, the Surety will pay a reasonable attorney's fee to the prevailing party to be fixed by the court. This bond shall inure to the benefit of any and all persons, companies and corporations entitled to file claims under Section 3181 of the Civil Code, so as to give a right of action to them or to their assigns in any suit brought upon this bond. And the Surety, for value received, hereby stipulates and agrees that no change, extension of time, alteration or addition to the terms of the Contract or to the work to be performed thereunder or the specifications accompanying the same shall in any way affect its obligation on this bond, and it does hereby waive notice of any such change, extension of time,

alteration or addition to the terms of the Contract or to the work or to the specifications.

The address or addresses at which the principal and surety(ies) may be served with notices, papers and other documents under the California Bond and Undertaking Law (Code of Civil Procedure section 995.010 et seq.) is the following:_____
_____.

IN WITNESS WHEREOF, we have hereunto set our hands and seals this ___ day of ____ _____, 20___.

_____
(Contractor as Principal)

(Seal)

By: _____

_____ [Name]

_____ [Title]

_____
(Surety)

(Seal)

By: _____

_____ [Name]

_____ [Title]

NOTE: Date of bond must not be prior to date of Contract. If Contractor is a partnership, all partners should execute bond.

2.4 CONTRACTOR'S WORKER'S COMPENSATION CERTIFICATE

TO: DISTRICT

I am aware of the provisions of Section 3700 of the Labor Code which require every employer to be insured against liability for workers' compensation or to undertake self-insurance in accordance with the provisions of that code, and I will comply with such provisions before commencing the performance of the work of this Contract.

BIDDER

_____ [Company/firm name]

_____ [Authorized signature]

_____ [Name]

_____ [Title]

5.19 REMOVAL OF REJECTED AND UNAUTHORIZED WORK AND MATERIALS

5.19.1 All work or materials which have been rejected shall be remedied, or removed and replaced by the Contractor in an acceptable manner and no compensation will be allowed it for such removal, replacement, or remedial work.

5.19.2 Any work done beyond the lines and grades shown on the Plans or established by the Engineer or any extra work done without written authority will be considered as unauthorized work and will not be paid for. Upon order of the Engineer, unauthorized work shall be remedied, removed, or replaced at the Contractor's expense.

5.19.3 Upon failure of the Contractor to comply with any order of the Engineer made under this Section, the District may cause rejected or unauthorized work to be remedied, removed, or replaced, and may deduct the costs therefor from any monies due or to become due the Contractor.

5.20 DEDUCTIONS FOR UNCORRECTED WORK.

If the Engineer deems it inexpedient to correct work damaged or not done in accordance with the Contract Documents, an equitable deduction from the Contract price shall be made therefor; and such sum may be withheld by District from Contractor's payment.

5.21 EQUIPMENT AND PLANTS

5.21.1 Only equipment and plants suitable to produce the quality of work and materials required will be permitted to operate on the project.

5.21.2 Plants will be designed and constructed in accordance with general practice for such equipment and shall be of sufficient capacity to insure the production of sufficient material to carry the work to completion within the time limit.

5.21.3 The Contractor shall provide adequate and suitable equipment and plants to meet the above requirements, and when ordered by the Engineer, shall remove unsuitable equipment from the work and discontinue the operation of unsatisfactory plants.

5.21.4 The Contractor shall identify each piece of its equipment, other than hand tools, by means of an identifying number plainly stenciled or stamped on the equipment at a conspicuous location, and shall furnish to the Engineer a list giving the description of each piece of equipment and its identifying number. In addition, the make, model number and empty gross weight of each unit of compacting equipment shall be plainly stamped or stenciled in a conspicuous place on the unit. The gross weight shall be either the manufacturer's rated weight or the scale weight.

5.21.5 In the case of termination of this Contract before completion from any cause whatever, the Contractor, if notified to do so by the District, shall promptly remove any part or all of its equipment and supplies from the property of the District. If the Contractor fails to do so, the

District shall have the right to remove such equipment and supplies at the expense of the Contractor.

5.22 CHARACTER OF WORKER

If any subcontractor, or person employed by the Contractor or any subcontractor shall be incompetent or act in a disorderly or improper manner, it shall be removed from the project work immediately, and such person shall not again be employed on the work. Such discharge shall not be the basis for any claim for compensation or damages against the District, the Engineer or any of their officers, directors, employees or agents.

5.23 SEPARATE CONTRACTS

5.23.1 The District reserves the right to let other contracts in connection with this work. The Contractor shall afford other contractors reasonable opportunity for the introduction and storage of their materials and the execution of their work, and shall properly connect and coordinate its work with the other contractor's work.

5.23.2 If any part of the Contractor's work depends for proper execution or results upon the work of any other contractor, the Contractor shall inspect and promptly report to the Engineer any defects in such work that render it unsuitable for such proper execution and results. The Contractor's failure to inspect and report shall constitute an acceptance of the other contractor's work as fit and proper for the reception of the Contractor's work, except as to defects that may develop in the other contractor's work after the execution of its work. To insure the proper execution of its subsequent work, the Contractor shall measure work already in place and shall at once report to the Engineer any discrepancy between the executed work and the drawings.

5.24 MATERIALS

5.24.1 Unless otherwise specifically stated in the Specifications, the Contractor shall furnish all materials necessary for the execution and completion of the work. Unless otherwise specified, all materials shall be new and shall be manufactured, handled, and installed in a workmanlike manner to insure completion of the work in accordance with the Contract Documents. The Contractor shall, upon request of the Engineer, furnish satisfactory evidence as to the kind and quality of materials.

5.24.2 Where materials are to be furnished by the District, the type, size, quantity and location at which they are available will be stated in the Contract Documents.

5.24.3 Manufacturers' and suppliers' warranties, guarantees, operating manuals, instruction sheets and parts listed, which are furnished with certain articles or materials incorporated in the work, shall be delivered to the Engineer before final acceptance of the Contract work.

5.25 STORAGE OF MATERIALS; STORAGE AREAS

5.25.1 Articles or materials to be incorporated in the work shall be stored in such a manner as to insure the preservation of their quality and fitness for the work, and to facilitate

inspection.

5.25.2 The Contractor's work and storage areas are limited by the right-of-way lines as indicated on the Plans. The plant facilities are to be installed in property or easements owned by the District as shown on the Plans. The District shall be specifically exempted in any agreement from any liability incurred from the use of private property for construction purposes. The Contractor shall make arrangements and pay for property off-site as required for storage, offices, work assembly areas, etc. The Contractor shall take all responsibility for storage of materials. No equipment for incorporation in the project may be stored in an area subject to flooding.

5.26 TRADE NAMES AND ALTERNATIVES.

For convenience in designation in the Specifications and Plans, certain articles or materials to be incorporated in the work may be designated under a trade name or the name of a manufacturer and its catalog information. The use of an alternative article or material that is of equal quality and of the required characteristics for the purpose intended will be permitted, subject to the following requirements:

5.26.1 The burden of proof as to the quality and suitability of alternatives shall be upon the Contractor and it shall furnish all information necessary as required by the Engineer. The Engineer shall be the sole judge as to the quality and suitability of alternative articles or materials and his decision shall be final.

5.26.2 Whenever the Specifications and Plans permit the substitution of a similar or equivalent material or article, no tests or action relating to the approval of such substitute material or article will be made until the request for substitution is made in writing by the Contractor accompanied by complete data as to the equality of the material or article proposed. Such request by the Contractor must be made within thirty-five (35) days after award of Contract.

5.27 CERTIFICATES OF COMPLIANCE

5.27.1 A Certificate of Compliance shall be furnished prior to the use of any materials for which the Specifications require that such a certificate be furnished. In addition, when so authorized in the Specifications, the Engineer may permit the use of certain materials or assemblies prior to sampling and testing if accompanied by a Certificate of Compliance. The Certificate shall be signed by the manufacturer of the material or the manufacturer of assembled materials and shall state that the materials involved comply in all respects with the requirements of the Contract. A Certificate of Compliance shall be furnished with each lot of material delivered to the work and the lot so certified shall be clearly identified in the Certificate.

5.27.2 All materials used on the basis of a Certificate of Compliance may be sampled and tested at any time. The fact that material is used on the basis of a Certificate of Compliance shall not relieve the Contractor of responsibility for incorporating material in the work which conforms to the requirements of the Contract Documents and any such material not conforming to such requirements will be subject to rejection whether in place or not.

5.27.3 The District reserves the right to refuse to permit the use of material on the basis of a Certificate of Compliance.

5.27.4 The form of the Certificate of Compliance and its disposition shall be as directed by the Engineer.

5.28 ASSIGNMENT.

The Contractor shall not assign the Contract or sublet it as a whole or in part without the written consent of the District, nor shall the Contractor assign any monies due, or to become due to it hereafter, without the prior written consent of the District.

5.29 USE OF COMPLETED PORTIONS, RIGHT TO OPERATE UNSATISFACTORY EQUIPMENT OR FACILITIES

5.29.1 The District may, at any time, and from time to time, during the performance of the work, enter the work site for the purpose of installing any necessary work by District labor or other contracts, and for any other purpose in connection with the installation of facilities. In doing so, the District shall endeavor not to interfere with the Contractor and the Contractor shall not interfere with other work being done by or on behalf of the District.

5.29.2 If, prior to completion and final acceptance of all the work, the District takes possession of any structure or facility (whether completed or otherwise) comprising a portion of the work with the intent to retain possession thereof (as distinguished from temporary possession contemplating the return to the Contractor), then, while the District is in possession of the same, the Contractor shall be relieved of liability for loss or damage to such structure other than that resulting from the Contractor's fault or negligence. Such taking of possession by the District shall not relieve the Contractor from any provisions of this Contract respecting such structure, other than to the extent specified in the preceding sentence, nor constitute a final acceptance of such structure or facility.

5.29.3 If, following installation of any equipment or facilities furnished by the Contractor, defects requiring correction by the Contractor are found, the District shall have the right to operate such unsatisfactory equipment or facilities and make reasonable use thereof until the equipment or facilities can be shut down for correction of defects without injury to the District.

5.30 LANDS FOR WORK, RIGHT-OF-WAY CONSTRUCTION ROADS, TEMPORARY UTILITY SERVICES

5.30.1 The District will provide the lands, easements, rights-of-way, and/or encroachment permits necessary or other rights to enter and work on lands necessary for the performance of the work. Other permits and licenses are addressed by section 5.11. Should the Contractor find it advantageous to use any additional land for any purpose whatever, the Contractor shall provide for the use of such land at its expense. The Engineer shall be furnished with a copy of written agreements or otherwise be notified in writing of additional working space which is acquired. Nothing herein contained and nothing marked on the Plans shall be interpreted as giving the Contractor exclusive occupancy of the territory provided by the District. When two or more contracts are being executed at one time on the same or adjacent land in such a manner that work on one contract may interfere with that on another, the Engineer shall decide which contractor shall cease work, and which shall continue, or whether the work on both contracts shall progress at the same time and in what manner; and the decision of the Engineer shall be final and binding. When the territory of one contract is the necessary or convenient means of access for the performance of another contract, such privilege of access or any other reasonable privilege may be granted by the Engineer to the contractor so desiring, to the extent, amount, in the manner, and at the time permitted. No such decision as to the method or time of conducting the work or the use of territory shall be the basis of any claim for delay or damage.

5.30.2 Lands, easements or rights-of-way to be furnished by the District for construction operations will be specifically shown on the Plans.

5.30.3 The Contractor shall construct and maintain all roads necessary to reach the various parts of the work and for the transportation thereto of construction material and personnel. The cost of constructing and maintaining such roads shall be borne by the Contractor.

5.30.4 The Contractor shall make its own arrangements for any utility services it may require during the life of this project. The Contractor shall make its own arrangements for telephone service which it will require for its field office.

5.31 PROGRESS SCHEDULE

5.31.1 The Contractor shall submit within 10 days after Date of the Contract a schedule or schedules which shall show the dates at which the Contractor will start and complete the several parts of the work. This schedule shall conform to the completion time specified in the Contract. The Contractor shall review and, if necessary, revise the progress schedule at least once per month, and in any event shall submit a current schedule to the Engineer at his request at any time during the contract period.

5.31.2 The Engineer shall be advised in advance by the Contractor when construction work is scheduled and the days when no construction work will take place. If the Contractor fails to notify the Engineer in advance of the day or days when no construction work will be done, the Contractor will be charged the cost of inspection for that day or days and such charges may be deducted from any payment due the Contractor.

5.31.3 When, in the judgement of the Engineer, it is necessary to accelerate any part of the work ahead of schedule, the Contractor shall, when directed, concentrate its efforts on such part of the work.

5.32 COMMENCEMENT AND PROGRESS OF THE WORK AND TIME OF COMPLETION/CONSTRUCTION SEQUENCE

5.32.1 The Contractor shall commence the work covered by this Contract within fifteen (15) days after date of issuance of Notice to Proceed from the District to proceed with the work. Work will be considered to have commenced when the Contractor begins ordering materials and equipment or starts site work. The Contractor shall not commence work or incur any expenses in connection therewith, before it is notified to proceed with the work. Work on the total project shall be completed within 120 calendar days from the date of the Notice to Proceed. The time allowed for completion includes an allowance for working time lost due to normal inclement weather. A Pre-Construction conference will be scheduled by the Engineer prior to the Contractor starting work.

5.32.2 The Contractor shall give the Engineer written notice not less than two (2) working days in advance of the actual date on which the work will be started. The Contractor shall be entirely responsible for any delay in the work that may be caused by this failure to give such notice. The Engineer shall have the right to specify the locations where the Contractor shall start and proceed with the work.

5.32.3 The Contractor shall diligently pursue the work and complete the work as specified within the time limits as set forth in the Contract Documents.

5.33 SUSPENSION OF WORK

5.33.1 The Engineer may at any time, by notice in writing to the Contractor, suspend any part of the work for such period of time as may be necessary to prevent improper execution of the work on the project by the Contractor, its subcontractors or agents, and the Contractor shall have no claim for damages or additional compensation on account of any such suspension.

5.33.2 The District may at any time suspend any part or all of the work upon ten (10) days written notice to the Contractor, who shall thereupon discontinue all work suspended except for all operations to prevent loss or damage to work already executed as may be directed by the Engineer. In the event a part of the work is suspended, the Contractor, if the suspension is not through its fault or the fault of its subcontractors or agents, shall be paid in accordance with section

5.3.9 for costs of work performed in accordance with such orders of the Engineer during such suspension, provided that this shall not include any cost pertaining to work not suspended by the notice to suspend work. Work shall be resumed by the Contractor after such suspension on subsequent written notice to resume work from the District. In the event of suspension of the entire work by the District, the Contractor, if the suspension is not through the fault of the Contractor or the fault of its subcontractors or agents, shall be paid the sum of $50 for each calendar day during which the entire work shall have been suspended. Said sum is hereby mutually agreed upon as fixed and liquidated damages in full settlement of all costs and expenses, losses and damages resulting to the Contractor from such suspension.

5.33.3 In the event of any suspension of the work in whole or in part under subsection 5.33.2 above, if the suspension is not through the fault of the Contractor or the fault of its subcontractors or agents, the Contractor shall be entitled to an extension of time wherein to complete the work to the extent of the delay caused the Contractor thereby. If no agreement can be reached as to the time for extension, the Contractor shall submit a claim to the District within fifteen (15) days of a notice from the District that no agreement can be reached. The claim shall be processed in accordance with section 5.4.

5.33.4 In the event the entire work shall be suspended by order of the District, and shall remain so suspended for a period of sixty (60) consecutive days, through no fault of the Contractor or its subcontractors or agents, and notice to resume the work shall not have been served on the Contractor, Contractor may, at its option, by written notice to the District, terminate the Contract in the same manner and on the same terms as if the termination had been initiated by the District pursuant to section 5.34.6, and the District shall have no claim for damages because of such termination of the Contract.

5.34 TERMINATION FOR DEFAULT - DAMAGES FOR DELAY - TIMELY EXTENSION

5.34.1 The Contractor shall at all times employ such force, plant, materials, supplies, equipment and tools as will be sufficient, in the opinion of the Engineer, to prosecute the work at not less than the rates fixed under the terms of the Contract and to complete the work or any part thereof within the time limits fixed by the Contract. If the Contractor refuses or fails to prosecute the work, or any separable part thereof, with such diligence as will ensure the completion within the time specified in the Contract, or any extension thereof, or fails to complete said work within such time, the District may, after giving ten (10) days written notice to the Contractor, terminate its right to proceed with the work or such part of the work as to which there has been delay.

5.34.2 The Contractor's right to proceed shall not be so terminated nor the Contractor charged with resulting damage if:

5.34.2.1 The delay in the completion of the work arises from unforeseeable causes beyond the control and without the fault or negligence of the Contractor, including but not restricted to Acts of God, acts of the public enemy, acts of the District, acts of another contractor in the performance of a contract with the District, fires, floods (excluding site flooding due to groundwater), epidemics, quarantine restrictions, strikes, lockouts, freight embargoes, unusually

severe weather, or delays of subcontractors and suppliers arising from unforeseeable causes beyond the control and without the fault or negligence of either the Contractor or such subcontractors and suppliers; and

5.34.2.2 The Contractor, within ten (10) days from the beginning of any such delay (unless the Engineer grants a further period of time before the date of final payment under the Contract), notifies the Engineer in writing of the causes of delay and requests an extension of time. The Engineer shall ascertain the facts and the extent of the delay and extend the time for completing the work when, in his judgment, the findings of fact justify such an extension. If the Contractor disagrees with the Engineer's decision, it shall submit a claim to the District within fifteen (15) days of the Engineer's decision, which claim shall be processed in accordance with section 5.4.

5.34.3 A request for an extension of time, or the granting of an extension of time, shall not constitute a basis for any claim against the District for additional compensation or damages unless caused by the District or another contractor employed by the District.

5.34.4 If the Contractor should be adjudged bankrupt, or if it should make a general assignment for the benefit of its creditors, or if a receiver should be appointed for the Contractor on account of its insolvency and not be discharged within ten (10) days after its appointment, or if the Contractor should fail to make prompt payments to subcontractors or suppliers, or should it persistently disregard laws, ordinances, or the instructions of the Engineer, or should it improperly execute the work, or should it otherwise commit a substantial violation of any provisions of the Contract, the District may, after giving ten (10) days written notice to the Contractor, terminate the Contract and/or the Contractor's right to proceed with the work.

5.34.5 The rights and remedies of the District provided in this section are in addition to any of the rights and remedies provided by law or under this Contract.

5.34.6 In addition to the District's rights under this section, if at any time before completion of the work under the Contract, it shall be determined by the District that it is advisable for it, for whatever reason, to terminate the work, it may do so upon ten (10) days written notice to the Contractor. Upon service of such notice of termination, the Contractor shall discontinue the work in such manner, sequence, and at such times as the Engineer may direct. The Contractor shall have no claim for damages for such discontinuance or termination, nor any claim for anticipated profits on the work thus dispensed with or uncompleted, nor any other claim except for the work actually performed up to the time of termination, including any extra work ordered by the Engineer to be done, nor for any claim for liquidated damages in accordance with the provisions of section 5.33.

5.35 RIGHTS OF DISTRICT UPON TERMINATION

5.35.1 In the event the right of the Contractor to proceed with the work, or any portion thereof, has been terminated because of the fault of the Contractor and the Contractor has been given ten (10) days notice to cure such fault and has not done so, the District may take over the work and prosecute the same to completion by contract or any other method the District deems expedient, and may take possession of and utilize in completing the work such materials, appliances, equipment and plant as may be on the site of the work and necessary therefor. Whether or not the Contractor's right to proceed with the work is terminated, it and its sureties shall be liable for all damages, including but not limited to, costs of managerial and administrative services, engineering, legal and other consultant fees, sustained or incurred by the District in enforcing the provisions of section 5.34 and in completing or causing to complete the Contract work.

5.35.2 Upon termination, the Contractor shall not be entitled to receive any further payment until the work is finished. If upon completion of the work the total cost to the District, including, but not limited to, engineering, legal and other consultant fees, costs of managerial and administrative services, construction costs and liquidated damages, shall be less than the amount which would have been paid if the work had been completed by the Contractor in accordance with the terms of the Contract, then the difference shall be paid to the Contractor in the same manner as the final payment under the Contract. If the total cost incurred by the District on account of termination of the Contractor and subsequent completion of the work by the District by whatever method the District may deem expedient shall exceed said amount which the Contractor would otherwise have been paid, the Contractor and its sureties shall be liable to the District for the full amount of such excess expense.

5.35.3 The rights and remedies of the District provided in this section are in addition to any of the rights and remedies provided by law or under this Contract.

5.36 FAILURE TO COMPLETE THE WORK IN THE TIME AGREED UPON LIQUIDATED DAMAGES

5.36.1 It is agreed by the parties to the Contract that time is of the essence; and that in case all the work is not completed before or upon the expiration of the time limit as set in the Bid, Contract and Progress Schedule, or within any time extensions that may have been granted, damage will be sustained by the District; and that it may be impracticable to determine the actual amount of damage by reason of such delay; and it is, therefore, agreed that the Contractor shall pay to the District as damages the amount of $ 300 per day for each and every day's delay in finishing the work in excess of the number of days specified. The parties expressly agree that this liquidated damage clause is reasonable under the circumstances existing at the time the Contract was made. The District shall have the right to deduct the amount of liquidated damages from any money due or to become due the Contractor.

5.36.2 In addition, the District shall have the right to charge to the Contractor and to deduct from the final or progress payments for the work the actual cost to the District of legal, engineering, inspection, superintendence, and other expenses, which are directly chargeable to the Contract and which accrue during the period of such delay, except that the cost of final inspection

and preparation of the final estimate shall not be included in the charges.

5.36.3 Notwithstanding the provisions of section 5.36.1, the Contractor shall not be liable for liquidated damages or delays caused by the removal or relocation of utilities when such removal or relocation is the responsibility of the District or the owner of the utility under California Government Code section 4215.

5.37 CLEAN-UP

5.37.1 During the progress of the work, the Contractor shall maintain the site and related structures and equipment in a clean, orderly condition and free from unsightly accumulation of rubbish. Upon completion of work and before the final estimate is submitted, the Contractor shall at its own cost and expense remove from the vicinity of the work all plants, buildings, rubbish, unused work materials, concrete forms, and temporary bridging and other like materials, belonging to it or used under its direction during the construction; and in the event of its failure to do so, the same may be removed by the District after ten (10) calendar days notice to the Contractor, such removal to be at the expense of the Contractor. Where the construction has crossed yards or driveways, they shall be restored by the Contractor to the complete satisfaction of the Engineer, at the Contractor's expense.

5.37.2 The Contractor shall dispose of all testing or disinfection water without damage to property, and all in accordance with applicable regulations. All chlorinated water shall be dechlorinated prior to discharge.

5.38 COMPLIANCE WITH LAWS; PERMITS; TAXES.

Contractor is an independent contractor and shall at its sole cost and expense do the following: comply with all laws, rules, ordinances and regulations of all federal, state and local agencies having jurisdiction over the work; procure all permits and licenses, pay all charges and fees, and give all notices necessary and incident to the lawful prosecution of the work; pay all federal, state and local taxes, including manufacturers' taxes, sales taxes, use taxes, processing taxes, and payroll, wage, insurance, social security, and unemployment taxes on wages, salaries or any remuneration paid to Contractor's employees, whether levied under existing or subsequently enacted laws, rules or regulations; and pay all property tax assessments on materials or equipment used until acceptance by the District. If any discrepancy or inconsistency is discovered in the Plans or Specifications, or in this Contract in relation to any such law, rule, ordinance, regulation, order or decree, the Contractor shall forthwith report the same to the Engineer in writing. The Contractor shall also protect, defend, hold harmless and indemnify the District, the Engineer, and all of the District's officers, directors, agents, and employees against any claim or liability arising from or based upon the violation of any such law, rule, ordinance, regulation, order or decree, whether by the Contractor itself or by its employees. Particular attention is called to the following:

5.38.1 Without limitation, materials furnished and performance by Contractor hereunder shall comply with Safety Orders of the Division of Industrial Safety, State of California, Federal Safety regulations of the Bureau of Labor, Department of Labor; and any other applicable Federal regulations.

5.38.2 The Contractor, upon request, shall furnish evidence satisfactory to the District and Engineer that any or all of the foregoing obligations have been or are being fulfilled. The Contractor warrants to the District that it is licensed by all applicable federal, state and local governmental bodies to perform this Contract and will remain so licensed throughout the progress of the work, and that it has, and will have, throughout the progress of the work, the necessary experience, skill and financial resources to enable it to perform this Contract.

5.39 PREVAILING WAGE, AND TRAVEL AND SUBSISTENCE PAY

5.39.1 The Contractor shall forfeit as penalty to the District not more than the sum of fifty dollars ($50) for each calendar day or portion thereof for each worker (whether employed by the Contractor or subcontractor) paid less than the stipulated prevailing rates for any work done under the Contract in violation of the provisions of the California Labor Code and in particular, sections 1772 to 1780. The amount of this penalty shall be determined by the Labor Commissioner and shall be based on consideration of the contractor's mistake, inadvertence, or neglect in failing to pay the correct rate of prevailing wages, or the previous record of the contractor in meeting its prevailing wage obligations, or a contractor's willful failure to pay the correct rates of prevailing wages. A mistake, inadvertence, or neglect in failing to pay the correct rate of prevailing wages is not excusable if the contractor had knowledge of its obligations under Labor Code sections 1720, et seq. In addition to the aforementioned penalty, each worker shall be paid the difference between the prevailing wage rate and the amount paid to each worker for each calendar day or portion thereof for which said worker was paid less than the prevailing wage.

5.39.2 The District will not recognize any claims for additional compensation because of the payment of the wages set forth in the Contract Documents. The possibility of wage increases is one of the elements to be considered by the Contractor in determining its Bid, and will not under any circumstances be considered as the basis of a claim against the District or the Engineer.

5.40 LABOR DISCRIMINATION.

Attention is directed to California Labor Code section 1735 which is applicable to the work under this Contract and which reads as follows: "No discrimination shall be made in the employment of persons upon public works because of their race, religious creed, color, national origin, ancestry, physical disability, mental disability, medical condition, marital status, or sex of such persons, except as provided in Section 12940 of the Government Code, and every contractor for public works violating this section is subject to all the penalties imposed for a violation of this chapter."

5.41 EIGHT-HOUR DAY LIMITATION

5.41.1 In accordance with the provisions of the California Labor Code, and in particular, sections 1810 to 1815, eight hours labor shall constitute a day's work, and no worker, in the employ of the Contractor, or any subcontractor, doing or contracting to do any part of the work contemplated by this Contract, shall be required or permitted to work more than eight (8) hours in any one calendar day and forty (40) hours in any one calendar week in violation of those provisions; provided that subject to Labor Code Section 1815, a worker may perform work in excess of either eight (8) hours per day or forty (40) hours during any one week upon compensation for all hours worked in excess of eight (8) hours per day or forty (40) hours during any one week at not less than one and one-half times the basic rate of pay. Except as just provided, the Contractor shall forfeit as a penalty to the District the sum of twenty-five dollars ($25) for each worker employed in the performance of this Contract by it or by any subcontractor under it for each calendar day during which such worker is required or permitted to labor more than eight (8) hours in any one calendar day and forty (40) hours in any one calendar week in violation of sections 1810 through 1815.

5.41.2 The Contractor shall comply in all respects with the provisions of Labor Code section 1776, whose provisions are incorporated therein by this reference. In accordance with section 1776, the Contractor and each subcontractor shall keep an accurate record showing the names, addresses, social security numbers, work classifications, and straight time and overtime hours worked each day and week, and the actual per diem wages paid to each journeyman, apprentice, worker, or other employee employed by it in connection with the work specified therein, which record shall be open at all reasonable hours at the principal office of the Contractor to the inspection of the District, State and Federal officers and agents. Certified copies of the payroll records shall be furnished or made available for inspection to others as provided in section 1776. These payroll records shall be certified and shall be on forms provided by the State Division of Labor Standards Enforcement, or shall contain the same information as the forms provided by the Division. The Contractor shall file a certified copy of the payroll records with the entity that requested the records within 10 days after receipt of a written request. Any copy of records made available for inspection as copies and furnished upon request to the public or any public agency by the District, the Division of Apprenticeship Standards, or the Division of Labor Standards Enforcement shall be marked or obliterated in a manner so as to prevent disclosure of an individual's name, address, and social security number. The name and address of the Contractor shall not be marked or obliterated. The Contractor shall inform the District of the location of the payroll records, including the street address, city and county, and shall, within five working days, provide a notice of a change of location and address. The Contractor shall have 10 days in which to comply subsequent to receipt of written notice specifying in what respects the Contractor must comply with this section. In the event that the Contractor fails to comply with the 10-day period, he or she shall, as a penalty to the District, forfeit twenty-five dollars ($25) for each calendar day, or portion thereof, for each worker, until strict compliance is effectuated. Upon the request of the Division of Apprenticeship Standards or the Division of Labor Standards Enforcement, these penalties shall be withheld from progress payments then due.

5.42 EMPLOYMENT OF APPRENTICES.

The Contractor's attention is directed to California Labor Code sections 1777.5, 1777.6 and

1777.7 pertaining to employment of indentured apprentices, which are hereby incorporated by reference into this Contract. As applicable, the Contractor or any subcontractor employed by it in the performance of the Contract work shall take such actions as necessary to comply with the provisions of sections 1777.5, 1777.6 and 1777.7.

5.43 WATER POLLUTION.

The Contractor shall exercise every reasonable precaution to protect streams, lakes, reservoirs, and canals from pollution with fuels, oils, bitumens, calcium chloride, and other harmful materials and shall conduct and schedule its operations so as to avoid or minimize muddying and silting of said streams, lakes, reservoirs, and canals. Care shall be exercised to preserve vegetation beyond the limits of construction. The Contractor shall comply with California Fish and Game Code section 5650 and all other applicable statutes and regulations relating to the prevention and abatement of water pollution.

5.44 PATENTS

The Contractor shall assume all costs arising from the use of patented materials, equipment, devices, or processes used on or incorporated into the work, and agrees to indemnify, defend, protect and save harmless the District, the Engineer, and all of their officers, directors, employees, and other representatives, from all suits at law, or actions of every nature for, or on account of, the use of any patented materials, equipment, devices, or processes.

5.45 PUBLIC CONVENIENCE

5.45.1 This section defines the Contractor's responsibility with regard to convenience of the public and public traffic in connection with its operations.

5.45.2 The Contractor shall conduct its operations as to offer the least possible obstruction and inconvenience to the public; and it shall have under construction no greater length or amount of work than it can prosecute properly with due regard to the rights of the public.

5.45.3 Unless otherwise provided in the Contract Documents, all public traffic shall be permitted to pass through the work with as little inconvenience and delay as possible.

5.45.4 Spillage resulting from hauling operations along or across any publicly traveled way shall be removed immediately by the Contractor at its expense.

5.45.5 Construction operations shall be conducted in such a manner as to cause as little inconvenience as possible to abutting property owners.

5.45.6 Convenient access to driveways, houses and buildings along the line of the work shall be maintained and temporary approaches to crossings or intersecting highways shall be provided and kept in good condition. When the abutting property owner's access across the right-of-way line is to be eliminated, or to be replaced under the Contract by other access facilities, the existing access shall not be closed until the replacement access facilities are usable.

5.45.7 Water shall be supplied at Contractor's expense if ordered by the Engineer for the alleviation or prevention of dust nuisance as provided in the Contract Documents.

5.45.8 In order to expedite the passage of public traffic through or around the work, the Contractor shall install signs, lights, flares, barricades, and other facilities for the sole convenience and direction of public traffic. Also, the Contractor shall provide and station competent flagpersons whose sole duties shall consist of directing the movement of public traffic through or around the work. The cost of furnishing and installing such signs, lights, flares, barricades, and other facilities, and the cost of providing and stationing such flagpersons, all for the convenience and direction of public traffic, will be considered as included in the Contract price and no additional compensation will be allowed.

5.45.9 Flagpersons and guards, while assigned to traffic control, shall perform their duties and shall be provided with the necessary equipment in accordance with the current "Instructions to Flagmen" of the California Department of Transportation. The equipment shall be furnished and kept clean and in good repair by the Contractor at its expense.

5.46 UNDERGROUND UTILITIES

Prior to conducting any excavation, the Contractor shall contact the appropriate regional notification center as required by and shall otherwise comply with California Government Code section 4216, et seq. In accordance with Government Code section 4215, the Contractor shall be compensated for the costs of locating, repairing damage not due to the failure of the Contractor to exercise reasonable care, and removing or relocating existing main or trunkline utility facilities not indicated in the Contract Plans and Specifications with reasonable accuracy, and for the equipment on the project necessarily idled during such work; provided that the Contractor shall first notify the Engineer before commencing work on locating, repairing damage to, removing or relocating such utilities.

5.47 SAFETY AND TRENCHING.

5.47.1 The Contractor shall be solely and completely responsible for the conditions of the job site, including safety of all persons and property during performance of the work. This requirement shall apply continuously and not be limited to normal working hours. Safety provisions shall conform to all applicable Federal, State, and local laws, ordinances, and codes, and to the rules and regulations established by the California Division of Industrial Safety, and to other rules of law applicable to the work.

5.47.2 The services of the Engineer in conducting construction review of the Contractor's performance is not intended to include review of the adequacy of the Contractor's work methods, equipment, bracing or scaffolding or safety measures, in, on, or near the construction site, and shall not be construed as supervision of the actual construction nor make the Engineer or the District responsible for providing a safe place for the performance of work by the Contractor, subcontractors, or suppliers; or for access, visits, use work, travel or occupancy by any person.

5.47.3 The Contractor shall carefully instruct all personnel working in potentially hazardous work areas as to potential dangers and shall provide such necessary safety equipment and instruction as is necessary to prevent injury to personnel and damage to property. Special care shall be exercised relative to electrical work, work involving excavation and in pump sump work.

5.47.4 All work and materials shall be in strict accordance with all applicable State, Federal and local laws, rules, regulations, and codes.

5.47.5 Nothing in this Contract is to be construed to permit work not conforming to governing law. When Contract Documents differ from governing law, the Contractor shall furnish and install the higher standards called for without extra charge. All equipment furnished shall be grounded and provided with guards and protection as required by safety codes. We vapor-tight or explosion-proof electrical installation is required by law, this shall be provided.

5.47.6 Shoring and Trench Safety Plan - Attention is directed to California Civil Code section 832 relating to lateral and subjacent support, and the Contractor shall comply with this law.

5.47.7 In accordance with California Labor Code section 6705, if the total amount of the contract is in excess of $25,000, the Contractor shall submit to the District for acceptance, in advance of excavation, a detailed plan showing the design of shoring, bracing, sloping, or other provisions to be made for worker protection from the hazard of caving ground during the excavation of any trench or trenches 5 feet of more in depth.

5.47.7.1 The plan shall be prepared by a registered civil or structural engineer. As a part of the plan, a note shall be included stating that the registered civil or structural engineer certifies that the plan complies with United States Department of Labor Rules 29 CFR, Part 1926, October 31, 1989 (Amended) ("OSHA") and the CAL-OSHA Construction Safety Orders, whichever are more stringent, or that the registered civil or structural engineer certifies that the plan is not less effective than the shoring, bracing, sloping, or other provisions of OSHA and the Safety Orders.

5.47.7.2 The District or the Engineer or their consultants may have made investigations of subsurface conditions in areas we the work is to be performed. If so, these investigations are identified in the Contract Documents and the records of such investigations are available for inspection at the office of the Engineer. The detailed plan showing the design of shoring, etc., which the Contractor is required to submit to the District for acceptance of excavation will be not accepted by the District if the plan is based on subsurface conditions which are more favorable than those revealed by the investigations made by the District or the Engineer or their consultants; nor will the plan be accepted if it is based on soils-related criteria which is less restrictive than the criteria set forth in the report on the aforesaid investigations of subsurface conditions

5.47.7.3 The detailed plan showing the design of shoring, etc., shall include surcharge loads for nearby embankments and structures, for spoil banks, and for construction equipment and other construction loadings. The plan shall indicate for all trench conditions the minimum horizontal distances from the side of the trench at its top to the near side of the surcharge

loads.

5.47.7.4 Nothing contained in this section shall be construed as relieving the Contractor of the full responsibility for providing shoring, bracing, sloping, or other provisions which are adequate for worker protection. Review of the plan by the District and/or Engineer is only for general conformance to OSHA and the Safety Orders. Their failure to note exception(s) to the submittal does not relieve Contractor of any responsibility or liability for the plan. Contractor remains solely and completely responsible for all trench safety and for the means, methods, procedures, and materials therefor.

5.47.7.8 In accordance with California Public Contract Code section 7104, in the event that the work involves digging trenches or other excavations that extend deeper than four (4) feet below the surface, the Contractor shall promptly, and before the following conditions are disturbed, notify the District in writing, of any:

(a) Material that the Contractor believes may be material that is hazardous waste, as defined in Section 25117 of the Health and Safety Code, that is required to be removed to a Class I, Class II, or Class III disposal site in accordance with provisions of existing law;

(b) Subsurface or latent physical conditions at the site differing from those indicated; or,

(c) Unknown physical conditions at the site of any unusual nature, different materially from those ordinarily encountered and generally recognized as inherent in work of the character provided for in the Contract.

The District shall promptly investigate the conditions, and if it finds that the conditions do materially so differ, or do involve hazardous waste, and cause a decrease or increase in the Contractor's cost of, or the time required for, performance of any part of the work shall issue a change order under the procedures described in the Contract. In the event that a dispute arises between the District and the Contractor whet the conditions materially differ, or involve hazardous waste, or cause a decrease or increase in the Contractor's cost of, or time required for, performance of any part of the work, the Contractor shall not be excused from any scheduled completion date provided for by the Contract, but shall proceed with all work to be performed under the Contract. The Contractor shall retain any and all rights provided either by Contract or by law which pertain to the resolution of disputes and protests between the contracting parties.

5.48 PROTECTION OF PERSON AND PROPERTY

5.48.1 The Contractor shall take whatever precautions are necessary to prevent damage to all existing improvements, including above ground and underground utilities, trees, shrubbery that is not specifically shown to be removed, fences, signs, mailboxes, survey markers and monuments, buildings, structures, the District's property, adjacent property, and any other improvements or facilities within or adjacent to the work. If such improvements or property are injured or damaged by reason of the Contractor's operations, they shall be replaced or restored, at the Contractor's expense, to a condition at least as good as the condition they were in prior to the start of

the Contractor's operations.

5.48.2 The Contractor shall adopt all practical means to minimize interference to traffic and public inconvenience, discomfort or damage. The Contractor shall protect against injury to any pipes, conduits or other structures crossing the trenching or encountered in the work and shall be responsible for any injury done to such pipes or structures, or damage to property resulting therefrom. The Contractor shall support or replace any such structures without delay and without any additional compensation to the entire satisfaction of the Engineer. All obstructions to traffic shall be guarded by barriers illuminated at night. The Contractor shall be responsible for all damage to persons and property directly or indirectly caused by its operations and, under all circumstances, it must comply with the laws and regulations of the County and the State of California relative to safety of persons and property and the interruption of traffic and the convenience of the public within the respective jurisdictions.

5.48.3 The Contractor is cautioned that it must replace all improvements in rights-of-way and within the public streets to a condition equal to what existed prior to its entry onto the job.

5.48.4 Type and time of construction required at any road subject to interference by Contract work will be determined by those authorities responsible for maintenance of said road. It shall be the responsibility of the Contractor to determine the nature and extent of all such requirements, including provision of temporary detours as required; however, any construction right-of-way obtained by the District at affected roadways will be adequate for provision of all required detours. As required at any road crossing, the Contractor shall provide all necessary flagpersons, guardrails, barricades, signals, warning signs and lighting to provide for the safety of existing roads and detours. Immediately after the need for temporary detours ceases, or when directed, the Contractor shall remove such detours and perform all necessary cleanup work, including replacement of fences, and removal of pavement. Included shall be all necessary replacement of existing roadway appurtenances, grading work, soil stabilization and dust control measures, as required and directed. The cost of all work specified under this section shall be borne by the Contractor.

5.48.5 The Contractor shall examine all bridges, culverts, and other structures over which it will move its materials and equipment, and before using them, it shall properly strengthen such structures we necessary. The Contractor shall be responsible for any and all injury or damage to such structures caused by reason of its operations.

5.49 RESPONSIBILITY FOR REPAIR OF FACILITIES

All public or private facilities, including but not limited to canals, structures, telephone cables, roadways, curbs, gutters, parking lots, private drives, levees and embankments for creeks, ponds and reservoirs disturbed during construction of the work shall be repaired and/or replaced by the Contractor to match facilities existing prior to construction. In addition, the Contractor shall be responsible for any settlement damage to such facilities or adjoining areas for a period of one year after acceptance of such required facilities.

5.50 DISTRICT'S REPAIR.

In the event the Contractor refuses or neglects to make good any loss or damage for which it is responsible under this Contract, the District may itself, or by the employment of others, make good any such loss or damage, and the cost and expense of doing so, including any reasonable engineering, legal and other consultant fees, and any costs of administrative and managerial services, shall be charged to the Contractor. Such costs and expenses may be deducted by the District from claims for payment made by the Contractor for work completed or remaining to be completed.

5.51 CONTRACTOR'S LICENSE NOTICE

Statement required by California Business & Professions Code section 7030: "Contractors are required by law to be licensed and regulated by the Contractors' State License Board which has jurisdiction to investigate complaints against contractors if a complaint regarding a patent act or omission is filed within four years of the date of the alleged violation. A complaint regarding a latent act or omission pertaining to structural defects must be filed within 10 years of the date of the alleged violation. Any questions concerning a contractor may be referred to the Registrar, Contractors' State License Board, P.O. Box 26000, Sacramento, California 95826."

5.52 INSURANCE

5.52.1 The Contractor shall procure and maintain for the duration of the Contract the following insurance against claims for injuries to persons or damages to property which may arise from or in connection with the performance of the work hereunder by the Contractor, its agents, representatives, employees or subcontractors.

5.52.2 Minimum Scope of Insurance. Coverage shall be at least as broad as:

a. Commercial general liability coverage (Insurance Services Office occurrence form CG 0001), including liability coverage for premises and operations, explosion and collapse hazard, underground hazard, products/completed operations hazard, contractual liability, use of independent contractors, and broad form property damage with completed operations.

b. Automobile liability coverage (Insurance Services Office form CA 0001, code 1, any auto).

c. Workers' compensation insurance as required by the State of California and employer's liability insurance.

d. Course of construction (also known as builders risk) insurance form providing coverage for all risks of physical loss, damage or destruction to the work, to insure against such losses until final acceptance of the work by the District.

5.52.3 Minimum Limits of Insurance. The Contractor shall maintain limits no less

than:

a. General Liability: $2,000,000 per occurrence for bodily injury, personal injury and property damage. If commercial general liability insurance or other form with a general aggregate limit is used, either the general aggregate limit shall apply separately to this project/location or the general aggregate limit shall be twice the required occurrence limit.

b. Automobile Liability: $1,000,000 per accident for bodily injury and property damage.

c. Employer's Liability: $1,000,000 per accident for bodily injury or disease.

d. Course of construction: Completed value of the project.

5.52.4 Deductibles and Self-Insured Retentions. Any deductibles or self-insured retentions must be declared to and approved by the District. At the option of the District, either: the insurer shall reduce or eliminate such deductibles or self-insured retentions as respects the District, its officers, officials, employees and volunteers; or the Contractor shall procure a bond guaranteeing payment of losses and related investigations, claim administration and defense expenses.

5.52.5 The general liability and automobile liability policies are to contain, or be endorsed to contain, the following provisions:

5.52.5.1 The District, its officers, officials, employees, agents and volunteers are to be covered as insureds as respects: liability arising out of activities performed by or on behalf of the Contractor, products and completed operations of the Contractor; premises owned, occupied or used by the Contractor; or automobiles owned, leased, hired or borrowed by the Contractor. The coverage shall contain no special limitations on the scope of protection afforded to the District, its officers, officials, employees, agents or volunteers. The additional insured coverage or endorsement shall comply with California Insurance Code section 11580.04.

5.52.5.2 For any claims related to this project, the Contractor's insurance coverage shall be primary insurance as respects the District, its officers, officials, employees, agents and volunteers. Any insurance or self-insurance maintained by the District, its officers, officials, employees, agents or volunteers shall be excess of the Contractor's insurance and shall not contribute with it.

5.52.5.3 Any failure to comply with reporting or other provisions of the policies including breaches of warranties shall not affect coverage provided to the District, its officers, officials, employees, agents or volunteers.

5.52.5.4 The Contractor's insurance shall apply separately to each insured against whom claim is made or suit is brought, except with respect to the limits of the insurer's liability.

5.52.5.5 Each insurance policy required by this section shall be endorsed to state that coverage shall not be suspended, voided, canceled by either party, or reduced in coverage or in limits except after 30 days' prior written notice by certified mail, return receipt requested, has been given to the District.

5.52.6 Course of construction policies shall contain, or be endorsed to contain, the following provisions: (a) District shall be named as loss payee; and (b) The insurer shall waive all rights of subrogation against the District.

5.52.7 Acceptability of Insurers. Insurance is to be placed with insurers with a current A.M. Best's rating of no less than A:VII.

5.52.8 Verification of Coverage. Prior to commencing work, Contractor shall provide to District the following proof of insurance: (a) certificate(s) of insurance on ACORD Form 25-S (or insurer's equivalent) evidencing the required insurance coverages; and (b) endorsement(s) on ISO Form CG 2010 (or insurer's equivalent), signed by a person authorized to bind coverage on behalf the insurer(s), and certifying the additional insured coverages. The District reserves the right to require complete copies of all required insurance policies and/or endorsements affecting required insurance coverage at any time.

5.52.9 Subcontractors. The Contractor shall include all subcontractors as insureds under its policies, or shall require each subcontractor to provide insurance coverage consistent with the foregoing and to furnish separate endorsements or certificates to the District. All coverages for subcontractors shall be subject to all of the requirements stated in this section.

5.52.10 Any insurance bearing on adequacy of performance shall be maintained after completion of the project for the full guarantee period.

5.52.11 The requirements as to the types, limits, and the District's approval of insurance coverage to be maintained by the Contractor are not intended to and shall not in any manner limit or qualify the liabilities and obligations assumed by the Contractor under the Contract.

5.52.12 In addition to any other remedy the District may have, if the Contractor or any of the subcontractors fails to maintain the insurance coverage as required in this section 5.52, the District may obtain such insurance coverage as is not being maintained, in form and amount substantially the same as required herein, and the District may deduct the cost of such insurance from any amounts due or which may become due the Contractor under this Contract.

5.53 INDEMNITY AND LITIGATION COST

5.53.1 Contractor shall protect, defend, indemnify and hold harmless the District and Engineer, and their respective officers, directors, agents, employees, volunteers, representatives, boards, and consultants from and against all penalties and fines imposed by law and all loss, claim, cause of action, demand, suit, judgment, cost, damage, expense, and liability (including but not limited to court or arbitration costs and reasonable attorneys' and expert witness fees) resulting from injury to or death of persons, including without limitation employees of the District, Engineer and

Contractor, or damage to or loss of property, caused by, arising out of or in any way connected with the Contractor's or its subcontractors' or suppliers' performance, operations or activities under this Contract, except to the extent the sole negligence, active negligence or willful misconduct of an indemnified party proximately causes the loss, claim, demand, cost, suit, judgment, penalty, fine, cause of action, damage, expense, or liability. Upon the request of an indemnified party hereunder, Contractor shall defend any suit asserting a claim covered by this indemnity and shall pay any cost that may be incurred by an indemnified party in enforcing this indemnity. In all cases, the indemnified party shall have the right to approve counsel selected by Contractor in the defense of any legal action or with respect to any claim. In addition, the indemnified party shall have the right to participate in and be represented by counsel of its own choice and at its own expense in any legal action or with respect to any claim.

5.53.2 The District may withhold from payment due Contractor hereunder such amounts as, in the District's opinion, are sufficient to provide security against all loss, damage, expense, penalty, fine, cost, claim, demand, suit, cause of action, judgment, or liability covered by the foregoing indemnity provision.

5.53.3 In any and all claims against the District or the Engineer and his consultants, and each of their officers, directors, employees and agents by any employee of the Contractor, any subcontractor, anyone directly or indirectly employed by any of them, or anyone for whose acts any of them may be liable, the indemnification obligation under this section shall not be limited in any way by any limitation on the amount or type of damages, compensation or benefits payable by or for the Contractor, any subcontractor, anyone directly or indirectly employed by any of them, or anyone for whose acts any of them may be liable under Worker's Compensation statutes, disability benefit statutes or other employee benefit statutes.

5.53.4 Neither termination of this Contract nor completion of the acts to be performed under this Contract shall release Contractor from its obligations to indemnify, so long as the event upon which the claim is predicated shall have occurred prior to the effective date of any such termination or completion and arose out of or was in any way connected with performance or operations under this Contract by Contractor, its employees, agents, suppliers or subcontractors, or the employee, agent or subcontractor of any one of them.

5.53.5 Submission of insurance certificates or submission of other proof of compliance with the insurance requirements in this Contract does not relieve Contractor from liability under this indemnification and hold harmless clause. The obligations of this indemnity section shall apply whet or not such insurance policies shall have been determined to be applicable to any of such damages or claims for damages.

5.54 PROTECTION OF WORK

5.54.1 The Contractor shall be responsible for the care of all work until its completion and final acceptance; and it shall, at its own expense, replace damaged or lost material and repair damaged parts of the work or the same may be done at its expense by the District and the Contractor and its sureties shall be liable therefor. The Contractor shall make its own provisions for properly storing and protecting all material and equipment against theft, injury, or damage from any

and all causes. Damaged material and equipment shall not be used in the work. The Contractor shall take all risks from floods and casualties except as provided by law, and shall make no charge for the restoration of such portions of the work as may be destroyed or damaged by flood or other casualties or because of danger from flood or other casualties or for delays from such causes. The Contractor may, however, be allowed a reasonable extension of time on account of such delays, subject to the conditions hereinbefore specified.

5.54.2 The Contractor shall effectively secure and protect adjacent property and structures, livestock, crops and other vegetation. If applicable, the Contractor shall open fences on or crossing the right-of-way and install temporary gates of sound construction thereon so as to prevent the escape of livestock. Adjacent fence posts shall be adequately braced to prevent the sagging or slackening of the wire. Before such fences are opened, the Contractor shall notify the owner or tenant of the property and, we practicable, the opening of the fence shall be in accordance with the wishes of said owner or tenant. The Contractor shall be responsible that no loss or inconvenience shall accrue to the owner or tenant by virtue of its fences having been opened or the gate not having been either shut or attended at all times. We special types of fences are encountered, the Contractor shall install temporary gates made of similar materials and of suitable quality to serve the purposes of the original fences. In all cases we the Contractor removes fences to obtain work room, it shall provide and install temporary fencing as required, and on completion of construction shall restore the original fence to the satisfaction of the Engineer. All costs of providing, maintaining and restoring gates and fencing shall be borne by the Contractor. The Contractor shall provide and maintain all passageways, guard fences, lights and other facilities for protection required by public authority or local conditions.

5.54.3 The Contractor shall use extreme care during construction to prevent damage from dust to crops and adjacent property. The Contractor, at its own expense, shall provide adequate dust control for the right-of-way and take other preventative measures as directed by the Engineer.

5.54.4 The Contractor shall be responsible for all damage to any property resulting from trespass by the Contractor or its employees in the course of their employment, or subcontractors or their employees in the course of their employment, or anyone directly or indirectly employed by any of them, whet such trespass was committed with or without the consent or knowledge of the Contractor.

5.54.5 The Contractor shall see that the worksite is kept drained and free of all ground water and any other water which may impede the progress or execution of the Contract work.

5.54.6 The Contractor shall be responsible for any damage caused by drainage or water runoff from construction areas and from construction plant areas.

5.54.7 In an emergency affecting the safety of life, or of the work, or of adjoining property, the Contractor, without special instruction or authorization from the Engineer, is hereby permitted to act at its discretion to prevent such threatened loss or injury, and it shall so act without appeal if so instructed or authorized. Should the Engineer deem an emergency condition to exist, the Contractor shall immediately do those things and take those steps ordered by the Engineer. The decision of the Engineer in this respect shall be final and conclusive. Any claims for compensation

made by the Contractor on account of emergency work shall be determined as specified under section 5.3.

5.54.8 Except as provided by California Government Code section 4215, the Contractor shall be responsible for the removal, relocation and protection of all public and private utilities, including irrigation facilities in the nature of utilities, located on the site of the construction project if and to the extent that the same are identified in the Contract Documents; and the Contractor shall not be entitled to any extension of time or claim for damages for extra compensation in connection therewith. If and to the extent that such utilities or facilities are not identified in the Contract Documents, as between the Contractor and the District, the District will be responsible for the cost of their removal, relocation or protection, as the case may be, but the Contractor shall perform any such work in conformance with applicable provisions of section 5.3, if so directed by the Engineer and in such situation the Contractor shall not be responsible for delay in completion of the project caused by the failure of the District or the owner of the utility to provide for such removal or relocation. If the Contractor, while performing the Contract, discovers utility or irrigation facilities not identified by the District in the Contract Documents, it shall immediately notify the Engineer in writing.

5.54.9 When the work to be performed under the Contract crosses or otherwise interferes with existing streams, watercourses, canals, farm ditches, pipelines, drainage channels, or water supplies, the Contractor shall provide for such watercourse or pipelines and shall perform such construction during the progress of the work so that no damage will result to either public or private interests; and the Contractor shall be liable for all damage that may result from failure to so provide during the progress of the work.

5.55 ACCIDENTS

5.55.1 The Contractor shall provide and maintain, in accordance with California Labor Code section 6708 and Cal-OSHA requirements, adequate emergency first-aid treatment for its employees and anyone else who may be injured in connection with the work.

5.55.2 The Contractor shall promptly report in writing to the Engineer all accidents of any nature arising out of, or in connection with, the performance of the work, whet on or adjacent to the site, which caused death, personal injury, or property damage, giving full details and statements of witnesses. In addition, if death or serious injury or serious damage are caused, the accident shall be reported immediately by telephone or messenger to the District and the Engineer.

5.55.3 If any claim is made by anyone against the Contractor or any subcontractor on account of any accident, the Contractor shall promptly report the facts in writing to the Engineer, giving full details of the claim.

5.56 NO PERSONAL LIABILITY

Neither the District, the Engineer, nor any of their officers, directors, agents, or employees shall be personally responsible for any liability arising under the Contract, except such obligations as are specifically set forth herein.

5.57 MEASUREMENT OF QUANTITIES

Where the Contract provides for payment on a lump sum price basis, no measurement of quantity will be made. Where the Contract provides for payment on a unit price basis, the quantities of work performed will be computed by the Engineer on the basis of measurements taken by the Engineer, and these measurements shall be final and conclusive. All quantities of work computed under the Contract shall be based upon measurements by the Engineer according to United States Measurements and Weights. Methods of measurement are specified herein and in the Specifications.

5.58 SCOPE OF PAYMENT

5.58.1 The Contractor shall accept the compensation provided in the Contract as full payment for furnishing all labor, materials, tools, equipment, and incidentals necessary to the completed work and for performing all work contemplated and embraced under the Contract; also for loss or damage arising from the nature of the work, or from the action of the elements, or from any unforeseen difficulties which may be encountered during the prosecution of the work until the acceptance by the District and for all risks of every description connected with the prosecution of the work; also for all expenses incurred in consequence of the suspension or discontinuance of the work as provided in the Contract; and for completing the work according to the Specifications and Plans. Neither the payment of any estimate nor of any retained percentage shall relieve the Contractor of any obligation to make good any defective work or material.

5.58.2 No compensation will be made in any case for loss of anticipated profits. Increased or decreased work involving supplemental agreements will be paid for as provided in such agreements.

5.59 PROGRESS ESTIMATE

For each calendar month of Contract work, the Engineer will prepare a progress estimate of all work performed under the Contract. Within the first ten (10) days of each succeeding calendar month, the Engineer will prepare in writing and certify to the District, an estimate which in his opinion is a fair approximation of the value of all work done under the Contract, including any amounts due the Contractor for extra work and change orders. In arriving at the value of the work done, the Engineer will give consideration to the value of labor and materials which have been incorporated into the permanent work by the Contractor during the preceding month. Consideration will not be given to preparatory work done or for materials or equipment on hand. In order to assist the Engineer, the Contractor shall furnish the Engineer with copies of invoices for all such items delivered to the job site and incorporated into the work.

5.60 PROGRESS PAYMENTS

5.60.1 The District will pay the Contractor ninety (90%) percent of the amount of each properly submitted and undisputed progress payment request. Ten (10%) percent of the amount of each payment request shall be retained by the District until final completion and acceptance of all work under the Contract; provided, however, that if the Engineer, at any time after fifty (50%) percent of the work has been completed, finds that satisfactory progress is being made, the District

may pay any or all of the remaining progress payments in full.

5.60.2 In accordance with California Public Contract Code section 20104.50, a written payment request from the Contractor shall be reviewed by the Engineer as soon as practicable in order to determine whet it is proper. If it is determined not to be a proper payment request suitable for payment, then the Engineer shall return it to the Contractor with a written explanation of the deficiencies as soon as practicable, but not later than 7 days after receipt of the payment request. If the payment request is determined to be properly submitted and is undisputed, the Engineer will certify the payment as provided above and the District shall make the payment to the Contractor within 30 days after receipt of the payment request. If a properly submitted and undisputed payment request is not paid within this 30 day period, then the District shall pay interest on the overdue amount to the Contractor at the legal rate set forth at California Code of Civil Procedure section 685.010. This section shall not apply if District funds are not available for payment of the payment request or if payment is delayed due to an audit inquiry by the financial officer of the District.

5.60.3 The Contractor may, in accordance with California Public Contract Code section 22300, substitute securities for any monies which the District may withhold to insure performance under the Contract. Alternatively, on written request of the Contractor and at its expense, the District shall make payments of the retention earnings directly to an escrow agent pursuant to an escrow agreement entered into consistent with the terms of Public Contract Code section 22300.

5.60.4 When, in the judgment of the Engineer, the work is not proceeding in accordance with the provisions of the Contract, or when in his judgment the total amount of the work done since the last estimate amounts to less than $1,000, no pay estimate will be prepared and no progress payment will be made.

5.60.5 No progress estimate or payment shall be considered to be an approval or acceptance of any work, materials or equipment. Estimated amounts and values of work done and materials and equipment incorporated into the work will be conformed with actual amounts and values as they become available in subsequent progress estimates, progress payments and the final estimate and payment. All estimates and payments will be subject to correction in subsequent progress estimates and payments and the final estimate and payment.

5.60.6 It is mutually agreed between the parties to the Contract that no payments made under the Contract, including progress payments and the final payment, shall be evidence of the performance of the Contract, either wholly or in part, and no payment shall be construed to be an acceptance of any defective or incomplete work or improper materials.

5.60.7 District reserves the right to make payments jointly to the order of the Contractor and to any of its subcontractors or suppliers that might have a right to file a stop notice with the District. The District shall have no obligation to pay or to ensure the payment of money to a subcontractor or supplier, except as may otherwise be required by law.

5.61 FINAL ACCEPTANCE AND DATE OF COMPLETION

Whenever the Contractor shall deem all work under this Contract to have been completed in accordance therewith, it shall so notify the Engineer in writing, and the Engineer shall promptly ascertain whether the work has been satisfactorily completed and, if not, shall advise the Contractor in detail and in writing of any additional work required. When all the provisions of the Contract have been fully complied with to the satisfaction of the Engineer, he shall proceed with all reasonable diligence to determine accurately the total value of all work performed by the Contractor at the prices set forth in the Contract or fixed by Change Orders, and the total value of all extra work, all in accordance with the Contract. The Engineer will then certify to said final estimate and to the completion of the work, and will file copies thereof with the District and the Contractor. The date of completion shall be the date upon which the District makes its formal written acceptance of the work.

5.62 FINAL PAYMENT

Within ten (10) days after the date of completion, the District will file in the office of the County Recorder, a Notice of Completion of the work herein agreed to be done by the Contractor. On the expiration of thirty-five (35) days after the recordation of such Notice of Completion, the difference between said final estimate and all payments theretofore made to the Contractor shall be due and payable to the Contractor, subject to any requirements concerning the furnishing of a maintenance bond, and excepting only such sum or sums as may be withheld or deducted in accordance with the provisions of this Contract or as required by law. All prior certifications upon which partial payments may have been made, being merely estimates, shall be subject to correction in the final certificate. In accordance with California Public Contract Code section 7107(c), in the event of a dispute between the District and the Contractor, the District may withhold from the final payment an amount not to exceed 150% of the disputed amount.

5.63 FINAL RELEASE

Final payment to the Contractor in accordance with the final estimate is contingent upon the Contractor furnishing the District with a signed written release of all claims against the District arising by virtue of the Contract. Disputed Contract claims in stated amounts may be specifically excluded by the Contractor from the operation of the release. The release shall be in substantially one of the following forms:

UNCONDITIONAL WAIVER AND RELEASE UPON FINAL PAYMENT

The undersigned has been paid in full for all labor, services, equipment or material furnished to the District on the job of the District located at _____, California, and does hereby waive and release any right to a mechanic's lien, stop notice, or any right against a labor and material bond on the job, except for disputed claims for extra work in the amount of $_____.

CONTRACTOR

Dated: _____

_____ [Contractor name]

_____ [Authorized signature]

_____ [Name]

_____ [Title]

NOTICE: THIS DOCUMENT WAIVES RIGHTS UNCONDITIONALLY AND STATES THAT YOU HAVE BEEN PAID FOR GIVING UP THOSE RIGHTS. THIS DOCUMENT IS ENFORCEABLE AGAINST YOU IF YOU SIGN IT, EVEN IF YOU HAVE NOT BEEN PAID. IF YOU HAVE NOT BEEN PAID, USE A CONDITIONAL RELEASE FORM.

CONDITIONAL WAIVER AND RELEASE UPON FINAL PAYMENT

Upon receipt by the undersigned of a check from the District in the sum of $_____ payable to Contractor and when the check has been properly endorsed and has been paid by the bank upon which its is drawn, this document shall become effective to release any mechanic's lien, stop notice, or bond right the undersigned has on the job of the District located at_____ _____, California. This release covers the final payment to the undersigned of all labor, services, equipment or material furnished on the job, except for disputed claims for extra work in the amount of $_____. Before any recipient of this document relies on it, the party should verify evidence of payment to the undersigned.

Dated: _____

_____ [Contractor name]

_____ [Authorized signature]

_____ [Name]

_____ [Title]

5.64 RIGHT TO WITHHOLD PAYMENTS

In addition to all other rights and remedies of the District hereunder and by virtue of law, the District may withhold or nullify the whole or any part of any progress payment or up to 150% of the disputed amount from the final payment (see California Public Contract Code section 7107(c)) to such extent as may reasonably be necessary to protect the District from loss on account of:

5.64.1 Defective work not remedied, irrespective of when any such work be found to be defective;

5.64.2 Claims or liens filed or reasonable evidence indicating probable filing of claims or liens including, but not limited to, claims under California Labor Code sections 1775, 1776, or 1777.7;

5.64.3 Failure of the Contractor to make payments properly for labor, materials, equipment, or other facilities, or to subcontractors and/or suppliers;

5.64.4 A reasonable doubt that the work can be completed for the balance then unearned;

5.64.5 A reasonable doubt that the Contractor will complete the work within the agreed time limits;

5.64.6 Costs to the District resulting from failure of the Contractor to complete the work within the proper time; or

5.64.7 Damage to work or property.

Whenever the District shall, in accordance herewith, withhold any monies otherwise due the Contractor, written notice of the amount withheld and the reasons therefor will be given the Contractor. After the Contractor has corrected the enumerated deficiencies, the District will promptly pay to the Contractor the amount so withheld. When monies are withheld to protect the District against claims or liens of mechanics, suppliers, materialmen, subcontractors, etc., the District may at its discretion permit the Contractor to deliver a surety bond in terms and amount satisfactory to the District, indemnifying the District against any loss or expense, and upon acceptance thereof by the District, the District shall release to the Contractor monies so withheld.

5.65 WAIVER OF INTEREST

The District shall have no obligation to pay and the Contractor hereby waives the right to recover interest with regard to monies that the District is required to withhold by reason of judgment, order, statute or judicial process, or may withhold pursuant to the provisions of this Contract.

5.66 SATISFACTION OF CLAIMS AND LIENS

Neither the final payment nor any part of the retained percentage shall become due until the

Contractor, if required, shall deliver to the District, a complete release of all liens and claims arising out of this Contract, or receipts in full in lieu thereof and, if required in either case, an affidavit that so far as it has knowledge or information the releases and receipts include all the labor and material for which a lien or claim could be filed; but the Contractor may, if any subcontractor refuses to furnish a release or receipt in full, furnish a bond satisfactory to the District, to indemnify the District against any lien or claim. If any lien or claim remains unsatisfied after all payments are made, the Contractor shall refund to the District all monies that the latter may be compelled to pay in discharging such a lien, or claim, including all costs and reasonable attorney's fees.

5.67 ASSIGNMENT

In accordance with California Public Contract Code section 7103, the Contractor hereby offers and agrees to assign to the District all rights, title, and interest in and to all causes of action it may have under section 4 of the Clayton Act (15 U.S.C. section 15) or under the Cartwright Act (Chapter 2 (commencing with section 16700) of part 2 of division 7 of the Business and Professions Code), arising from purchases of goods, services, or materials pursuant to the Contract Documents. This assignment shall be made and become effective at the time the District tenders final payment to the Contractor, without further acknowledgment by the parties.

5.68 AVAILABILITY OF INFORMATION

5.68.1 The District's duly authorized representatives shall have, during the term of the Contract and for two years thereafter, the right to inspect, copy and audit all of the Contractor's and its subcontractors' accounts and records of all description, including but not limited to source documents and computer files, and to interview personnel, pertaining to the Contract to verify or review the quantity, quality, work program and progress of the work, reimbursable costs, amounts claimed by the Contractor, estimates of cost for fixed rates including those applicable to proposed changes, and for any other reasonable purposes.

5.68.2 The Contractor's and its subcontractors' accounts shall be kept in accordance with generally accepted accounting principles in the particular industry and shall be kept in such a manner and in sufficient detail to clearly disclose the nature and amounts of the different items of service and cost pertaining to the Contract and the basis for charges or allocations to the Contract. The Contractor and its subcontractors shall preserve all such accounts and records for a period of two years after the term of the Contract.

5.68.3 The Contractor shall include the necessary provisions in its subcontracts to ensure that its subcontractors comply with this provision.

5.69 HAZARDOUS MATERIALS

The California Health and Safety Code requires businesses to provide warnings prior to exposing individuals to materials listed by the Governor as chemicals "known to cause cancer or reproductive toxicity." The District may use chemicals on the Governor's list at many of its facilities. In addition, many of these chemicals are present at non-district-owned facilities and locations. Accordingly, in performing the work or services contemplated under this Contract, Contractor, its

employees, agents, and subcontractors may be exposed to chemicals on the Governor's list. Contractor is responsible for notifying its employees, agents, and Subcontractors that work performed hereunder may result in exposures to chemicals on the Governor's list.

5.70 INTEGRATION

The Contract Documents constitute the sole, final, complete, exclusive and integrated expression and statement of the terms of this contract among the parties concerning the subject matter addressed herein, and supersedes all prior negotiations, representations or agreements, either oral or written, that may be related to the subject matter of this Contract, except those other documents that are expressly referenced in the Contract Documents.

5.71 WAIVER

The waiver at any time by any party of its rights with respect to a default or other matter arising in connection with this Contract shall not be deemed a waiver with respect to any subsequent default or matter.

5.72 REMEDIES NOT EXCLUSIVE

The remedies provided in this Contract are cumulative and not exclusive, and are in addition to any other remedies that may be provided by law or equity. The exercise by either party of any remedy under this Contract shall be without prejudice to the enforcement of any other remedy.

5.73 SEVERABILITY

The invalidity, illegality or unenforceability of any provision of the Contract Documents shall not render the other provisions unenforceable, invalid or illegal.

5.74 GOVERNING LAW AND VENUE

Except as otherwise required by law, this Contract shall be interpreted, governed by, and construed under the laws of the State of California. The County shall be venue for any litigation concerning the enforcement or construction of this Contract.

5.75 NOTICES

Any notice, demand, invoice or other communication required or permitted to be given under this Contract shall be in writing and either served personally or sent by prepaid, first class U.S. mail and addressed as follows: for the District, either to the Engineer or the District at the addresses set forth in the Invitation to Bid; for the Contractor, at the address set forth in its Bid. Any party may change its address by notifying the other party in writing of the change of address.

PART B -- TECHNICAL SPECIFICATIONS

SECTION 02671

WATER WELLS

PART 1 -- GENERAL

1.01 GENERAL REQUIREMENTS

A. SCOPE:

1. The objective of the work described in this and the related specification sections is to construct two municipal water supply wells – the Roseview Park Well (N37) and the Coyle Well (N38). The design flow rate for the Roseview Park Well is 2,200 gallons per minute (gpm) and for the Coyle Well it is 1,400 gpm. The water supply wells are to be constructed in water-bearing formations to the approximate depths provided in the table below.

WELL NAME/NUMBER	WELL DEPTH
Roseview Park/N37	490 feet
Coyle/N38	380 feet

2. The work includes:

   a. Roseview Park Well: The drilling of a 7-inch, nominal, diameter, test hole to a depth of 500 feet, collecting formation samples for sieve analysis, and conducting geophysical logging. The production well will be constructed at the same location as the test hole.

   b. Coyle Well: The drilling of a 12-inch diameter, minimum, test hole utilizing reverse circulation or conventional rotary drilling equipment to a depth of 380 feet, conducting geophysical logging, and obtaining depth-specific water samples from aquifers selected by the District's Representative. The production well will be constructed at the same location as the test hole.

   c. The installation and cementing of 36-inch diameter surface casings.

   d. The drilling of a 32-inch diameter boreholes to the design depth at each site, conducting a caliper log, setting blank casing and louvered well casing, gravel packing, installing the cement seal,

initial well development by airlift swabbing, further development by pumping with a deep well turbine pump, and establishing well characteristics through test pumping activities.

e. The final well bores shall be drilled with reverse circulation drilling equipment and shall be 32-inches in diameter in order to accept 18-inch diameter casing, a 4-inch gravel feed tube, a 4-inch sounding pipe, and to provide an annular space of appropriate thickness to receive filter and grout seal media.

f. The work also includes;

- Installing intermediate seals
- Performing well alignment and plumbness tests
- Down-hole TV surveys
- Well disinfection and capping
- Site restoration
- Filing of state and local drilling reports
- Providing above ground drilling fluid pits
- Conveying construction water to the drill sites
- Disposing of water, cuttings, and drilling fluid as specified
- Providing continuous safety and protective measures
- Performing other work incidental to the project

B. RELATED WORK

1. This section includes by this reference, the following specification sections:

SECTION	TITLE
02672	TEST HOLE DRILLING
02674	WELL GEOPHYSICAL LOGGING

02675	WATER QUALITY SAMPLING **(Coyle Well only)**
02676	TEMPORARY STABILIZATION of TEST HOLE
02677	WELL SURFACE CASING
02678	PRODUCTION WELL DRILLING and CALIPER SURVEY
02679	WELL CASING AND SCREEN
02680	GRAVEL PACK, INTERMEDIATE SEALS, AND GROUT SEAL
02681	PLUMBNESS TEST, ALIGNMENT TEST AND WELL DEVELOPMENT
02682	STEP DRAWDOWN, CONSTANT RATE TESTS, AND RECOVERY SURVEY
02683	TELEVISION WELL SURVEY, WELL DISINFECTION, AND CAPPING

C. PROJECT LOCATIONS

1. The production wells are to be completed at the locations shown in the attached Figures.

D. PERSONNEL AND EQUIPMENT

1. The Contractor shall employ only competent workmen for the execution of the work and all such work shall be performed under the direct supervision of experienced water well drillers and pump installers. The Contractor shall provide the appropriate background check information for all employees proposed for the Coyle Well site - the site abuts Coyle Elementary School.

2. The Contractor shall furnish drilling equipment and pump installation equipment complete with all necessary tools and appurtenances of adequate capacity to complete the work. The drilling equipment shall be equipped with a weight indicator that can accurately measure the total casing load. All equipment to be used for the performance of the work shall comply with all Federal, State and local safety regulations.

3. Downhole drilling and pump equipment shall be disinfected prior to use on the project.

E. SECURITY

1. Contractor shall be fully responsible for the safety and security of all work areas at all times. Contractor shall take such measures as are necessary to prevent access of unauthorized persons and animals into the drilling sites. As a minimum, the Contractor shall provide an 8-feet high site-enclosing fence, "No Trespassing" signs (2 per fence side), temporary closure of excavations, and other precautionary procedures. All safety and security measures shall be maintained throughout the course of the entire work duration.

F. NOTIFICATION

1. The Contractor shall give notice to the District's Representative in writing or by telephone of specific operations as follows:

   a. Forty-eight (48) hours advance notice of intent to start any well drilling operations.

   b. Twenty-four (24) hours advance notice of intent to conduct a geophysical or caliper log.

   c. Twenty-four (24) hours advance notice of scheduling the installation of casing, screens, and filter material in the production well.

   d. Twenty-four (24) hours advance notice of scheduling installation of any of the grout seals. In addition, the Contractor is responsible for notifying the appropriate regulatory personnel within the time required prior to placing grout seals.

   e. Twenty-four (24) hours advance notice of scheduling development and testing of the completed production wells.

f. Twenty-four (24) hours advance notice of performing the test for sand content after development of the production wells.

g. Twenty-four (24) hours advance notice of scheduling the plumbness and alignment test in the production wells.

h. Twenty-four (24) hours advance notice of scheduling television surveys.

i. If operations are suspended by the Contractor for any reason, notice shall be given at that time stating the reason for suspension; notice also shall be given before work is resumed.

G. LICENSES, PERMITS AND REPORTS

1. The well drilling contractor shall possess a valid C-57 California Contractor's license. The Contractor shall pay all costs to procure all permits and licenses required by law for the execution of his work including but not limited to drilling permits from the County of Sacramento, Environmental Management Department. Contractor shall have in possession, at the job sites, all required drilling permits. Contractor shall comply with all State and local laws, ordinances, and rules and regulations relating to the performance of the work and shall file all reports as required by the State and local agencies in connection with the well drilling within 30 days. Copies of all reports and the original permits and licenses shall be submitted to the District's Representative.

1.02 REFERENCES

The publications referred to hereinafter form a part of this specification to the extent referenced. The publications are referred to in the text by the basic designation only. The latest edition of referenced publications in effect at the time of the bid shall govern. In case of conflict between the requirements of this section and the listed references, the requirements of this section shall prevail.

A. California Department of Water Resources

Reference	Title
Water Well Standards	Bulletin 74-81, Water Well Standards, State of California, December 1981, and Bulletin 74-90, California Well Standards, June 1991

1.03 SUBMITTALS

A. As specified in the related sections listed in paragraph 1.01B.

B. Copies of all reports, permits and licenses.

C. Traffic control plan **(Coyle Well only).**

D. Equipment disinfection documentation.

E. Fluid disposal plans.

PART 2 -- PRODUCTS

2.01 GENERAL

A. As specified in the related sections listed in paragraph 1.01B.

PART 3 -- EXECUTION

3.01 GENERAL

A. All work shall be performed as specified and in accordance with applicable sections of California Department of Water Resources Bulletin 74-81 "Water Well Standards, State of California" and its supplement Bulletin 74-90. Should the Contractor discover any discrepancies between the Specifications and State/Local requirements, the Contractor shall bring them to the attention of the District's Representative immediately. The Contractor shall be responsible for contacting Underground Service Alert (USA) in order to identify and avoid damaging existing utilities.

3.02 ABOVE GROUND DRILLING FLUID TANKS

A. The Contractor shall utilize only above ground tanks to manage the drilling fluid program. Drilling fluid tanks shall be properly equipped and have adequate capacity to meet the specified drilling fluid conditions.

3.03 WATER FOR DRILLING

A. The District shall furnish to the Contractor such water as may be needed at no cost. The Contractor shall coordinate with the District for the water needed and shall be responsible for obtaining a no-cost construction water permit and the permit-required

equipment. The Contractor shall be responsible for conveying the water to the drilling sites in a safe manner. A water source is available at nearby fire hydrants at both drilling sites.

3.04 DRILL CUTTINGS DISPOSAL

A. Drilling solids, cuttings, and fluids generated during the well construction process may be stockpiled on the sites during well construction. At well completion, drilling solids, cuttings, and fluids shall be hauled off the sites and disposed of in accordance with all applicable regulations.

3.05 DISPOSAL OF DEVELOPMENT AND TESTING FLUIDS

A. The Contractor shall dispose of groundwater generated during well development and test pumping in accordance with the District's NPDES permit requirements. One permit requirement sets a maximum daily effluent limit for settleable solids at 0.1 mL/L. The Contractor shall employ a Rain-for-Rent BF-4000 filtration system or equivalent to prevent turbid fluids from entering the County of Sacramento storm drain system. The Contractor shall be responsible for conveying the fluids to disposal points in a safe manner. The Contractor shall submit a fluid disposal plan for both well sites to the District for approval prior to any fluid disposal activities. At the Roseview Park Well site, discharges at high flow rates will have to be split to distribute the fluids to nearby, but separate, storm drain collection systems.

3.06 FINAL CLEANING

A. Immediately after a well is constructed, the Contractor shall be responsible for cleaning up the site, including removal of all temporary piping, so that the site has been restored to as near the original grade as possible. The District reserves the right to accept or reject any restoration.

3.07 SOUND MITIGATION

A. Construction operations at the drilling sites shall be performed so as to minimize noise at nearby residential dwellings. The Contractor shall erect sound-dampening barriers in a manner to mitigate noise disturbance at nearby homes. At the Coyle Well site, construction work will be limited to days only except for production well casing, gravelling operations, and the long-term continuous pump test.

3.08 TRAFFIC CONTROL (COYLE WELL ONLY)

A. The Contractor shall develop and submit a traffic control plan to the City of Citrus Heights for the Coyle Well site. Traffic plan approval shall be obtained prior to

beginning work at the site. The plan shall include an access plan to minimize impacts to adjacent property including the adjacent elementary school and nearby hospital and shall be in accordance with California Department of Transportation traffic control standards.

B. Traffic control shall include signs, warning lights, reflectors, barriers, and other necessary safety devices and measures, including sufficient flaggers to direct traffic through the construction areas when necessary.

C. No material or equipment shall be stored or parked where it will interfere with the free and safe passage of public traffic and pedestrians. At the end of each day's work, and other times when construction operations are suspended for any reason, the Contractor shall remove all equipment and other obstructions from public right-of-ways.

****END OF SECTION****

SECTION 02672

TEST HOLE DRILLING

PART 1 -- GENERAL

1.01 GENERAL REQUIREMENTS

A. SCOPE:

1. This section includes the procedures and materials associated with the drilling of a 7-inch, nominal, diameter test hole at the Roseview Park site and a 12-inch diameter, minimum, test hole at the Coyle site using conventional rotary drilling methods (Roseview Park = 500 feet and Coyle = 380 feet). It also includes all materials, labor, tools, and equipment required to collect formation samples, maintain circulation, and protect the test hole from caving. The test holes will ultimately be reamed to 32-inch diameter to complete both wells.

2. The requirements of Section 02671 apply to this section.

B. RELATED WORK:

1. The following specification sections are referenced herein:

Section	Title
Section 02671	WATER WELL

1.02 REFERENCES

A. American Society for Testing Materials (ASTM)

Reference	Title
D422	Standard Method for Particle Size Analysis of Soils

1.03 SUBMITTALS

A. The following information shall be submitted for review:

1. Product data regarding anticipated drilling fluid additives.

2. Test hole lithologic drilling log.

3. Formation grain size distribution analyses results.

PART 2 -- PRODUCTS

2.01 GENERAL

A. Provide a complete mud rotary drilling unit in which the uncased wall of the drill hole is held in place at all times with a circulating fluid. Provide tools, accessories, power, lighting, water, other equipment, and experienced personnel necessary to conduct efficient drilling operations at the site.

2.02 DRILL RIG AND PIPE

A. The drilling unit and associated equipment for the test hole shall have a minimum drilling capacity according to the following schedule:

B. The drilling pipe shall be in good condition and shall be connected by standard tool joints.

C. Equip the drilling rig with an instrument capable of continuous chart recording of drill penetration rate.

2.03 MUD TANKS

A. The above ground mud tank(s) shall be of a volume and shape to remove cuttings from drilling operations and return fluid suitable for drilling. The above ground mud tank(s) shall be cleaned periodically to maintain proper drilling fluid characteristics.

2.04 DRILLING FLUIDS

A. Use only potable water in drilling fluids, whether employed alone or in combination with drilling additives. Use only commercial chemical products in

common usage in the project area for water well drilling in the makeup of any drilling fluid. Biodegradable muds will not be allowed. Do not perform drilling with a mixture of water and unprocessed materials. The drilling fluid shall possess such characteristics as are required to adequately maintain the walls of the hole to prevent caving of the walls as drilling progresses and to permit recovery of representative samples of cuttings. Drilling fluid recirculated to the drill pipe or borehole shall not contain in excess of 2% sand.

B. Maintain controlled drilling fluid characteristics during the entire operation of well construction. If drilling fluid additives are used, the District's Representative may require that the Contractor retain or employ an experienced, qualified mud engineer on the job during all operations to supervise and maintain drilling fluid characteristics. The Contractor shall have at the job site the equipment necessary to measure drilling fluid weight, marsh funnel viscosity, and sand content and shall monitor said characteristics in maximum intervals of two (2) hours. The Contractor shall maintain a drilling fluid with the average properties given below.

Conventional Rotary Drilling

1. Mud Weight: 8.5 – 9.5 lb./gal.
2. Marsh Funnel Viscosity: 28 – 45 sec./qt.
3. Mud Cake Thickness: 0.03125 – 0.0625 inch
1. Sand Content less than 2% by volume

C. If lost circulation conditions occur, use only lost circulation drilling additives that can be retrieved or "broken down" during well development activities. Lost circulation drilling additives shall be Magma Fiber or equivalent.

D. Maintain a record showing any variation in the addition and amount of chemical products or water required during drilling. Show the depths at which such changes are required in the daily drilling reports.

2.05 SAMPLE CONTAINERS

A. Provide wide-mouth, plastic, quart size waterproof containers with tight-sealing lids.

PART 3 -- EXECUTION

3.01 TEST HOLE DRILLING

A. Drill a 7-inch, nominal, diameter test hole at the Roseview Park site and a 12-inch diameter, minimum, test hole at the Coyle site by conventional rotary method. Depth of the test hole may be increased or decreased at the direction of the District's Representative.

3.02 FORMATION SAMPLING

A. Take two representative formation samples at each interval of 10 feet and at each change in formation. Before collecting the samples, stop drilling and circulate drilling fluid until all cuttings are removed from the hole, then resume drilling and collect samples when cuttings reach the surface. Label and preserve each sample in containers. Clearly mark each container with well designation, date, time, and depth interval represented. Store the samples in a manner that prevents breakage or loss.

1. Prepare a complete lithologic drilling log and submit to the District's Representative within 24 hours of the end of test hole drilling.

2. The Contractor shall provide the District's Representative with grain size distribution analyses results for up to 20 formation samples. The "test" formation samples will be identified by the District's Representative. Analyses shall be performed either by the Contractor (if the Contractor operates an in-house qualified soils laboratory) or by an independent qualified soils laboratory subcontracted to the Contractor. Analyses shall be performed in accordance with ASTM D-422, "Standard Method for Particle-Size Analyses of Soils" as applicable to drill cuttings. Grain size distribution data shall be reported as a function of cumulative weight retained on the following sieve sizes:

U.S. Standard Size of Openings

Sieve No	Inches	Sieve No	Inches
¼	0.250	20	0.0331
4	0.187	30	0.0232
6	0.132	50	0.0117
8	0.0931	100	0.0059
12	0.0661	140	0.0041
16	0.0469	PAN	0.0000

3. The grain size distribution analyses results shall be submitted to the District's Representative within 72 hours of performing the geophysical log.

PART 4 -- MEASUREMENT AND PAYMENT

4.01 TEST HOLE DRILLING AND SAMPLING

A. Measurement for test hole drilling, formation sampling, and related testing will be based on the vertical feet of test hole completed below the ground surface. Payment will be at the unit price bid for test hole drilling.

4.02 STANDBY

A. During the progress of test hole drilling and well construction, it may be necessary for the District's Representative to perform work that will require the drilling crew and equipment to stand idle. In such event, the District's Representative will request the Contractor in writing to cease operations and will state the anticipated extent or duration of the standby time. The Contractor shall promptly furnish such needed assistance and shall take all steps necessary to prevent loss or damage to the bore hole/well.

B. Payment for standby time will be paid on an hourly rate as bid by the Contractor and in accordance with the actual hours as determined by the District's Representative.

C. Idle time of the drilling crew and equipment not ordered in writing by the District's Representative and time for repair and maintenance of the Contractor's equipment will not be reimbursable under this contract.

****END OF SECTION****

SECTION 02674

WELL GEOPHYSICAL LOGGING

PART 1 -- GENERAL

1.01 GENERAL REQUIREMENTS

A. SCOPE:

1. Upon completion of the test hole, run geophysical logs by a firm retained by the Contractor and approved by the District's Representative.

2. The requirements of Section 02671 apply to this section.

B. RELATED WORK:

1. The following specification sections are referenced herein:

Section	Title
Section 02671	WATER WELL
Section 02672	TEST HOLE DRILLING

1.02 REFERENCES (DELETED)

1.03 SUBMITTALS

A. The following shall be submitted for review:

1. Name of geophysical logging firm.

2. Eight copies and one PDF file of the geophysical logs.

PART 2 -- PRODUCTS

2.01 GEOPHYSICAL LOGS

A. The geophysical logs of the test hole shall be plotted on a 5-inch per 100 foot vertical scale, shall be provided as a PDF file, and shall consist of the following:

1. Spontaneous potential curve.

2. Resistivity curves with electrode spacing at 16 and 64 inches.

3. Gamma ray log.

The completed geophysical logs shall show the resistivity and temperature of the drilling fluid at the time of logging.

PART 3 -- EXECUTION

3.01 PREPARATION

A. Before running geophysical logs, cease drilling and circulate drilling fluid for one hour.

3.02 GEOPHYSICAL LOGGING

A. The geophysical logs shall become the property of the District at the time the logging is completed. Run the logs in the presence of the District's Representative. Provide a copy of the log to the District's Representative at the time of logging and obtain the District's Representative's approval of the log prior to releasing the logging company.

B. Provide whatever assistance as may be required to accomplish the geophysical logging including fluid circulation, removal of drill string, and operation of drilling rig as needed to support logging cable sheave wheel.

PART 4 -- MEASUREMENT AND PAYMENT

4.01 GEOPHYSICAL LOGGING

A. If, at any time, the information developed during the drilling or testing indicates that the completion of the well is not warranted, the District reserves the right to terminate all further work at the site. In such an event, the Contractor will be paid for the value of his work completed to that time based on unit prices indicated in the Bidding Schedule.

B. Payment for geophysical logging will be based on the contract lump sum for this item. Payment will include full compensation for fluid circulation, removal of drill string, operating of drilling rig as needed to support logging cable sheave wheel, and furnishing and operating geophysical logging equipment as specified.

C. There will be no additional payment for rig time or idle time while the log is being run.

****END OF SECTION****

SECTION 02675

WATER QUALITY SAMPLING
(COYLE WELL ONLY)

PART 1 -- GENERAL

1.01 GENERAL REQUIREMENTS

A. SCOPE:

1. This section includes materials for and execution of water quality sampling. The District's Representative will determine which strata will be isolated and sampled for water quality.

2. The requirements of Section 02671 apply to this section.

B. RELATED WORK:

1. The following specification sections are referenced herein:

Section	Title
Section 02671	WATER WELL
Section 02672	TEST HOLE DRILLING

1.02 REFERENCES (DELETED)

1.03 SUBMITTALS (DELETED)

PART 2 -- PRODUCTS

2.01 FILL MATERIAL

A. Material used to fill the test hole shall consist of hard, durable, clean sand or pea gravel and shall be free of organic material, clay balls, and other deleterious substances.

B. The pea gravel shall be uniformly graded from coarse to fine with a maximum particle size of 3/4 inch and a maximum of 15 percent by weight passing a No. 4 sieve.

C. The sand shall be uniformly graded from coarse to fine, with a maximum particle size of 3/8 inch and a maximum of 15 percent passing a No. 8 sieve.

2.02 BENTONITE SEALS

Form bentonite seals placed during isolated water quality sampling with size-graded bentonite pellets, which exhibit a high swelling capability. The seal material shall be Baroid's 3/8-inch HOLEPLUG or equivalent.

PART 3 -- EXECUTION

3.01 SAMPLING

Execute the sampling as follows:

A. The Contractor shall fill the test hole with native material and bentonite tablets to within five (5) feet of the depth of the bottom of the first (lowest) strata selected for testing. Bentonite and fill material shall be installed upward by tremie pipe from the bottom of the hole. The tremie pipe shall be initially located 20-feet from the well's bottom. The tremie pipe shall be removed in approximately 20-foot intervals as the bentonite and fill material reach the bottom of the tremie pipe. The depth shall be sounded to confirm the hole has been filled to the proper level.

B. The Contractor shall then lower a 4-inch diameter, minimum, sampling string with a twenty-foot (20') perforated pipe to the proper depth for developing the test strata. After placement of the perforated pipe, the Contractor shall fill the test hole with the specified pea gravel or sand through the tremie pipe to a level twenty feet (20') above the top of the perforated piping. The volume of gravel or sand placed shall be measured and compared to the theoretical volume required. The well shall be sounded to measure the depth to the top of the gravel pack. The Contractor shall then place a twenty-foot (20') ,minimum, impervious layer of bentonite seal material on top of the gravel pack to isolate the test strata using the tremie pipe.

C. The Contractor shall then develop the test strata by air lifting for a minimum period of 24 hours or until the following conditions, as determined by the District's Representative, have been met:

1. Water being pumped becomes clear to the eye.

2. The electrical conductivity and pH of the water has stabilized.

D. Once these conditions have been fulfilled, water samples of the isolated zone shall be taken as described below.

1. Because chemical constituents with known volatility will be sampled and tested, a 4-inch submersible pump shall be used for obtaining the water sample.

2. The zone shall be pumped with the submersible pump for an additional 12 hours before a sample is taken. The submersible pump provided shall be capable of pumping up to 75 GPM against 300 feet of total head.

E. The Contractor shall retain the services of a State-certified laboratory to collect, preserve, transport, and conduct water quality testing on the water sample obtained in accordance with Chapter 15 of the California Code of Regulations, Title 22 "Domestic Water Quality and Monitoring" (Revised September, 1994 and updated on January 1, 2009).

The water quality testing shall include the following:

1. Inorganics (Section 64432)
2. Nitrate, Nitrite (Section 64432.1)
3. Asbestos (Section 64432.2)
4. Secondary Standards (Section 64449, Table 64449-A)
5. Secondary Standards (Section 64449, Table 64449-B)
6. General Mineral (Section 64449 (c) (2))
7. Volatile Organic Chemicals (Section 64444, Table 64444-A (a))
8. Non-Volatile Synthetic Organic Chemicals (Section 64444, Table 64444-A (b))
9. Unregulated (Volatile) Organic Chemicals (Section 64450, Table 64450-A)
10. Unregulated Organic Chemicals (Section 64450, Table 64450-B)
11. Unregulated Organic Chemicals (Section 64450, Table 64450-C)
12. Unregulated Inorganic Chemicals (Section 64450, Table 64450-D)
13. Natural Radioactivity (Section 64442)
14. Man-Made Radioactivity (Section 64443)
15. Dissolved Arsenic
16. Dissolved Manganese and Dissolved Iron
17. Radon
18. Hexavalent Chromiun
19. Perchlorate
20. NDMA

F. Withdraw perforated pipe to the next sampling interval as determined by the District's Representative and repeat Steps A through F.

3.02 DRAWDOWN AND SAMPLING

Measure drawdown between the 4-inch diameter sampling string and the 12-inch borehole during airlifting and pumping to ensure a tight seal has been obtained. Every fifteen (15) minutes the Contractor shall measure and record temperature, pH, and electrical conductivity of water from the isolated interval during airlifting and pumping, and compare the results to temperature, pH, and electrical conductivity of the drilling fluid.

PART 4 -- MEASUREMENT AND PAYMENT

4.01 ISOLATED AQUIFER WATER SAMPLING AND QUALITY TESTING

A. Payment for performing all specified work associated with isolated aquifer water sampling and quality testing shall be paid for at the unit price bid.

****END OF SECTION****

SECTION 02676

TEMPORARY STABILIZATION OF TEST HOLE

PART 1 -- GENERAL

1.01 GENERAL REQUIREMENTS

A. SCOPE:

1. This section describes temporary stabilization of the test hole while the final production well design is completed.

2. The requirements of Section 02671 apply to this section.

B. RELATED WORK:

1. The following specification sections are referenced herein:

Section	Title
Section 02671	WATER WELL
Section 02672	TEST HOLE DRILLING

1.02 REFERENCES (DELETED)

1.03 SUBMITTALS (DELETED)

PART 2 -- PRODUCTS

2.01 FILL MATERIAL

A. Use fill pea gravel conforming to the specifications provided below. The volume of fill material used shall not be less than the calculated volume of the test hole. Provide the devices necessary to measure the volume of fill material placed in the test hole.

2.02 PEA GRAVEL

A. The pea gravel shall be uniformly graded from coarse to fine with a maximum particle size of 3/4-inch and a maximum of 15 percent by weight passing a No. 4 sieve.

PART 3 -- EXECUTION

3.01 FILLING TEST HOLE

A. Upon notification by the District's Representative, fill the test hole up to a depth specified by the District's Representative.

B. Place the pea gravel in the test hole through a construction tremie pipe.

C. If the volume of the fill material is significantly less than that specified in Part 2.01 above, redrill the test hole to eliminate bridging of fill material and refill with material specified herein.

D. Whenever there is an interruption in the work, the test hole and/or the production well shall be covered in a manner that will preclude injury to animals and individuals. Furthermore, the work area shall be securely protected at all times when the Contractor's employees are absent from the work area in order to preclude entry into the construction area by animals and unauthorized individuals. It shall be the Contractor's responsibility to select an appropriate and effective means to provide the necessary protection.

PART 4 -- MEASUREMENT AND PAYMENT

4.01 TEST HOLE STABILIZATION

A. Payment for hole stabilization will be based on vertical feet of test hole filled at the unit price bid.

B. No standby time or mobilization/demobilization charges will be paid during the time period between test hole stabilization and commencement of redrilling/reaming of the filled test hole.

C. No payment will be made for redrilling the test hole to eliminate bridging of the fill material.

****END OF SECTION****

SECTION 02677

WELL SURFACE CASING

PART 1 -- GENERAL

1.01 GENERAL REQUIREMENTS

A. SCOPE:

1. This section includes the procedures and materials associated with the installation of the well surface casing.

2. The requirements of Section 02671 apply to this section.

B. RELATED WORK:

1. The following specification section is referenced herein:

Section	Title
Section 02671	WATER WELL

1.02 REFERENCES

A. The publications referred to hereinafter form a part of this specification to the extent referenced. The publications are referred to in the text by the basic designation only. The latest edition of referenced publications in effect at the time of the bid shall govern. In case of conflict between the requirements of this section and the listed references, the requirements of this section shall prevail.

1. American Society for Testing Materials (ASTM)

Reference	Title
ASTM A53	Pipe, Steel, Black and Hot-Dipped Zinc Coated Welded and Seamless
ASTM C150	Standard Specification for Portland Cement

1.03 SUBMITTALS

A. The following information shall be submitted for review:

1. Submit certified test reports of surface casing to show compliance with both the physical and chemical properties of the steel.

2. Grout seal mix design.

PART 2 -- PRODUCTS

2.01 WELL SURFACE CASING

A. Provide 36-inch O.D. blank well casing. Well casing shall be 1/2-inch in thickness, and shall be manufactured in accordance with ASTM A53 Grade B, applicable parts. The casing shall be factory assembled in not less than 20-foot lengths. Section ends shall be machined with a beveled edge at one end, to facilitate proper alignment of joined casing sections.

B. Furnish casing centralizers that provide at least 1-foot length of bearing surface at the wall of the bore.

C. Perform welding with shielded arc electrodes.

D. All casing material shall be new.

2.02 GROUT SEAL

A. Cement shall conform to ASTM C150, Type II.

B. The material used for the grout seal outside the casing shall be a sand-cement grout. The grout mix shall consist of not more than two parts by weight of sand, one part weight of cement, to 7 gallons of water per sack of cement, unless otherwise approved by the District's Representative.

PART 3 -- EXECUTION

3.01 SURFACE CASING BOREHOLES

A. The surface casing boreholes shall be drilled to a minimum 42-inch diameter, to a depth of 70 feet. The surface casing boreholes may be drilled using rotary drilling methods or by using the bucket auger drilling method.

3.02 JOINTS

A. The 36-inch pipe joints shall be secured by butt welding techniques and shall be watertight.

3.03 CENTRALIZERS

A. Weld 4 steel guides positioned 90 degrees apart horizontally to the exterior of the surface casing. Place the first set of guides 5 feet from the bottom of the casing, the second set 35 feet from the bottom of the casing, and a third set 65 feet from the bottom of the casing. All guides shall be aligned to allow installation of a temporary tremie pipe to the bottom of the surface casing borehole.

3.04 GROUT SEALS

A. Fill the open annular space between the surface casing and the borehole with the grout mix specified using a tremie pipe. Do not allow grout to free fall into the annular space. The grout seal shall extend to the ground surface. Placement of the grout seals shall be witnessed and approved by a representative of the County of Sacramento, Environmental Management Department.

B. Upon completion of grouting, the level of grout shall be at ground level. After grouting operations are completed, leave the grout undisturbed for a period of not less than 24 hours.

C. Record the volume of grout used. The volume shall not be less than the calculated volume of the annular space between the wall of the borehole and the casing. Significant differences between estimated and actual volume of cement installed may be grounds for well rejection.

PART 4 -- MEASUREMENT AND PAYMENT

4.01 WELL SURFACE CASING AND GROUT SEAL

A. Payment for drilling the surface casing borehole, installing the surface casing, and grouting activities will be based on measurement of vertical feet of surface casing installed below the ground surface.

****END OF SECTION****

SECTION 02678

PRODUCTION WELL DRILLING AND CALIPER SURVEY

PART 1 -- GENERAL

1.01 GENERAL REQUIREMENTS

A. SCOPE:

1. This section includes the procedures and materials associated with drilling the boreholes by reverse circulation rotary drilling methods to a depth of 380 feet at the Coyle Well site and 490 feet at the Roseview Park Well site. No other drilling method will be authorized. It also includes materials, labor, tools and equipment required to maintain circulation, and protect the borehole from caving. This section also includes a description and procedures for conducting a caliper survey on the well boreholes to enable estimates of filter gravel pack and grout seal needed in the well. A geophysical log as specified in Section 02674 will be conducted on the Roseview Park Well borehole at the same time as the caliper survey.

2. The requirements of Section 02671 apply to this section.

B. RELATED WORK:

1. The following specification sections are referenced herein:

Section	Title
Section 02671	WATER WELL

1.02 REFERENCES (DELETED)

1.03 SUBMITTALS

A. The following information shall be submitted for review:

1. Product data regarding anticipated drilling fluid additives and procedures to ensure the removal of the additives during well development.

2. Daily drilling reports that show drilling penetration rate and drilling fluid measurements.

3. The name of the proposed caliper logging firm.

4. Eight copies of each caliper survey and one reproducible original, and one electronic DXF file on compact disk.

PART 2 -- PRODUCTS

2.01 GENERAL

A. Provide a complete reverse circulation rotary drilling unit in which the uncased wall of the drill hole is held in place at all times with a circulating fluid. Provide tools, accessories, power, lighting, water, other equipment, and experienced personnel necessary to conduct efficient drilling operations at the sites.

2.02 DRILL RIG AND PIPE

A. The drilling unit and associated equipment for the production wells shall be in good condition capable of lowering the 18-inch casing and screen for the production wells to the depths shown below without floatation and shall have a minimum drilling capacity according to the following schedule:

Purpose	Capacity
Coyle Well Casing	18-inch diameter to a depth of 370 feet
Coyle Well Borehole	32-inch diameter to a depth of 380 feet
Roseview Park Well Casing	18-inch diameter to a depth of 470 feet
Roseview Park Well Borehole	32-inch diameter to a depth of 490 feet

B. The drilling pipe shall be in good condition and shall be connected by standard threaded tool joints.

C. Equip the drilling rig with an instrument capable of continuous chart recording of drill penetration rate.

2.03 MUD TANKS

A. The mud tank(s) shall be of a volume and shape to remove cuttings from drilling operations and return fluid suitable for reverse circulation drilling. The mud tank(s) shall be cleaned periodically to maintain proper drilling fluid characteristics.

2.04 DRILLING FLUIDS

A. Use only potable water in drilling fluids, whether employed alone or in combination with drilling additives. Use only commercial chemical products in common usage for water well drilling in the makeup of any drilling fluid. Biodegradable muds will not be allowed. Do not perform drilling with a mixture of water and unprocessed materials. The drilling fluid shall possess such characteristics as are required to adequately maintain the walls of the borehole to prevent caving of the walls as drilling progresses and to permit recovery of representative samples of cuttings. Drilling fluid recirculated to the drill pipe or borehole shall not contain in excess of 2% sand.

B. Maintain controlled drilling fluid characteristics during the entire operation of well construction. If drilling fluid additives are used, the District's Representative may require that the Contractor retain or employ an experienced, qualified mud engineer on the job during all operations to supervise and maintain drilling fluid characteristics. The Contractor shall have at the job site the equipment necessary to measure drilling fluid weight, marsh funnel viscosity, and sand content and shall monitor and record on the daily drilling reports said characteristics in maximum intervals of two (2) hours. The Contractor shall maintain a drilling fluid with the average properties given below.

1. Weight 8.3 - 8.9 lb./gal.

2. Marsh Funnel Viscosity 28 - 35 sec./qt.

3. Sand Content less than 2% by volume

C. If lost circulation conditions occur, use only lost circulation drilling additives that can be retrieved or "broken down" during well development activities. Lost circulation drilling additives shall be Magma Fiber or equivalent.

D. Maintain a record showing any variation in the addition and amount of chemical products or water required during drilling. Show the depths at which such changes are required in the daily drilling reports.

2.05 CALIPER

A. The caliper used to perform the surveys shall have a minimum of three arms and shall be capable of indicating a hole diameter to 48 inches.

PART 3 -- EXECUTION

3.01 PRODUCTION WELL DRILLING

A. The final bore diameter shall be 32 inches.

3.02 CALIPER SURVEY

A. Upon completion of the drilling operations and a maximum of 2 hours prior to commencement of casing installation, run a caliper survey by a firm retained by the Contractor and approved by the District's Representative.

B. The caliper survey shall become the property of the District at the time the logging is completed. Provide a copy of the caliper log to the District's Representative immediately upon completion of caliper logging. Provide the copies of the caliper survey within five days after the survey is completed.

C. Plot the caliper survey results on a 5-inch per 100 foot vertical scale.

D. Provide whatever assistance may be required to accomplish the caliper survey. There will be no additional payment for rig time or idle time while the survey is being run.

E. If the caliper survey shows the hole to be less than the specified diameter at any point or the hole is less than the specified depth, reream the hole or redrill and resurvey. If corrective measures are required, provide and pay for all corrective measures and additional caliper surveys required by the District's Representative.

F. Conduct a geophysical log per Section 02674 on the Roseview Park Well at the same time as the caliper survey.

PART 4 -- MEASUREMENT AND PAYMENT

4.01 BOREHOLE AND CALIPER SURVEY

A. The drilled hole will be measured by the vertical feet drilled to the specified diameter, measured from the ground surface, and paid for at the unit price bid.

B. Payment for the caliper survey shall be based on the contract lump sum for this item.

C. No payment will be made for redrilling the hole or for a subsequent caliper survey.

D. Payment for geophysical logging the Roseview Park Well borehole will be based on the contract lump sum for this item.

E. No payment will be made for unauthorized borehole "over" drilling.

****END OF SECTION****

SECTION 02679

WELL CASING AND SCREEN

PART 1 -- GENERAL

1.01 GENERAL REQUIREMENTS

A. SCOPE:

1. This section specifies materials and installation of the blank well casing, screen, permanent gravel feed tube and sounding pipe.

2. The requirements of Section 02671 apply to this section.

B. RELATED WORK:

1. The following specification sections are referenced herein:

Section	Title
Section 02671	WATER WELL

1.02 REFERENCES

A. The publications referred to hereinafter form a part of this specification to the extent referenced. The publications are referred to in the text by the basic designation only. The latest edition of referenced publications in effect at the time of the bid shall govern. In case of conflict between the requirements of this section and the listed references, the requirements of this section shall prevail.

1. American Society for Testing Materials (ASTM)

Reference	Title
ASTM A139	Electric-Fusion (Arc) – Welded Steel Pipe
ASTM A53	Pipe, Steel, Black and Hot-Dipped Zinc Coated Welded and Seamless

2. American Welding Society (AWS)

Reference	Title
AWS D10.9	Standard Qualification of Welding Procedures and Welders for Piping and Tubing

1.03 SUBMITTALS

A. The following information shall be submitted for review:

1. Submit certified test reports of blank well casing to show compliance with both the physical and chemical properties of the steel.

2. Submit certified test reports of louvered well screen to show compliance with both the physical and chemical properties of the steel.

3. Submit 4-inch sounding pipe/access port casing connection details.

PART 2 -- PRODUCTS

2.01 BLANK WELL CASING

A. Provide 18-inch I.D. blank well casing. Well casing shall be 5/16-inch in thickness, and shall be manufactured in accordance with ASTM A139 Grade B, applicable parts, with the following additions: Welding shall be by the automatic submerged-arc process using at least one pass on the inside and at least one pass on the outside. It shall be spiral welded. The steel from which the casing is manufactured shall contain not less than 0.20% copper by ladle analysis.

B. Casing joints shall be furnished with a collar for welding. Machine bevel the ends of each plain end casing joint perpendicular to the casing axis to ensure the straightness of each assembled section. Provide collars in accordance with the following standards:

1. Collars shall be 5/16-inch in thickness, 5 inches in length, and have the same chemical and physical properties as the corresponding casing section. Roll the collar to fit the outside casing diameter, and weld to the casing section. Grind longitudinal welds on the casing plain end to plate surface a sufficient distance from the end for insertion into the collar.

2. Grind or scarf the inside edge of the collars and the outside edge of the adjacent casing length to remove sharp edges or burrs. Machine section

ends flat perpendicular to the axis of the casing so they do not vary more than 0.010 inch at any point from a true plane at right angles to the axis of the casing.

3. Provide three 1-inch by 3/8-inch alignment holes in each collar to ensure proper matching of the sections.

C. Furnish casing centralizers that provide at least one (1) foot length of bearing surface at the wall of the bore. Centralizers shall be fabricated of the same material as each casing and screen section to which they are attached.

D. Perform welding with shielded arc electrodes.

E. All casing material shall be new.

2.02 WELL SCREEN

A. The well screen shall be of the louvered type, with machine-made openings that are perpendicular to the axis of the casing and of a louver form with the aperture facing downward. The louvered screen shall be Roscoe Moss Ful Flo Louver Screen, or equivalent.

B. The louvered well screen shall be manufactured in accordance with ASTM A 139 Grade B, applicable parts, with the following additions: welding shall be by the automatic submerged-arc process using at least one pass on the inside and at least one pass on the outside. The screen shall have a wall thickness of 5/16-inch and it shall be spiral welded. The steel from which the screen is manufactured shall contain not less than 0.20 percent copper by ladle analysis.

C. Slot openings of louvered well screen shall be 0.050-inch for project bidding purposes. Actual slot opening size will be determined from test hole daa.

D. The louvered well screen shall be 18-inch I.D. and shall not be fabricated in less than 20-foot lengths unless otherwise directed by the District's Representative. It shall be spiral welded and contain not more than one circumferential seam in 10 feet.

E. Ensure that the inside diameter of the 18-inch louvered well screen is the same as the inside diameter of the 18-inch blank well casing.

F. Joints for the steel well screen shall meet the same specifications as for the blank well casing.

G. All well screen material shall be new.

2.03 GRAVEL FEED TUBE

A. The permanent gravel feed tube shall be 4-inch steel pipe conforming to ASTM A53 Grade A, Schedule 40. Fit the top of the gravel feed tube with a Class 150, hot dipped galvanized, threaded cap. Pipe exposed above grade shall be hot dipped galvanized.

2.04 SOUNDING TUBE/ACCESS PORT

A. The permanent sounding tube shall be threaded and coupled 4-inch steel pipe conforming to ASTM A53 Grade A, Schedule 40. Fit the top of the sounding pipe with a Class 150, hot dipped galvanized, threaded cap. Pipe exposed above grade shall be hot dipped galvanized. The sounding tube/access port shall enter the 18-inch well casing with a Roscoe Moss camera tube connection device or equal. The casing entry dimension shall be 5-inches wide by 82-inches in length.

2.05 BULLNOSE

A. The bottom of the casing string shall be closed with a 3/8-inch thick bullnose manufactured of the same material as the bottom section of casing and to which it shall be welded.

PART 3 -- EXECUTION

3.01 GENERAL

A. When the drilling and caliper survey have been completed, install the blank casing, gravel feed tube, sounding pipe and screen. Do not float casing and screen into place in the borehole.

3.02 JOINTS

A. All 18-inch pipe joints shall be attached with collars secured by welding in accordance with these specifications. All joints shall be watertight. Welders shall be certified in accordance with AWS D10.9 for level AR-1 and shall be qualified in the 2G and 5G positions or the 6G position. The 4-inch gravel feed tube shall be butt welded and the 4-inch sounding pipe shall be threaded and coupled. The 4-inch gravel feed tube and the 4-inch sounding pipe shall be tack welded to the 18-inch casing's collars.

3.03 ALIGNMENT HOLES

A. All collar alignment holes shall be welded closed as the casing and screen are installed.

3.04 CENTRALIZERS

A. Weld 4 steel guides positioned 90 degrees apart horizontally to the exterior of casing and screen at intervals of not more than 60 feet and at screen joints to centralize and hold the casing in the proper position until the gravel is in place. Place the first set of guides 5 feet from the bottom of the casing with end cap. All guides shall be aligned to allow installation of a temporary tremie pipe to the bottom of the well.

3.05 ASSEMBLY INSTALLATION

A. Suspend the well casing and screen string in tension from the surface by means of a clamp. The bottom of the casing shall be at a sufficient distance above the bottom of the reamed hole as to ensure that none of the casing assembly will be supported from the bottom of the hole.

B. If for any reason the casing and screen cannot be placed in the correct position or at a depth acceptable to the District's Representative, construct another well at an adjacent location selected by the District's Representative and complete this well in accordance with the specifications and drawings at no additional cost to the District. Seal the abandoned hole according to County of Sacramento, Environmental Management Department directions at no additional cost to the District.

C. If any of the casings or screen should collapse prior to well completion, withdraw them and replace at no additional cost to the District.

PART 4 -- MEASUREMENT AND PAYMENT

4.01 GENERAL

A. All work required to be repeated due to Contractor error and all additional materials, labor, and equipment required shall be furnished at the expense of the Contractor, and no claim for additional compensation shall be allowed therefore, except as specifically provided herein.

4.02 BLANK CASING

A. Payment for the well blank casing installation will be based on measurement of vertical feet of casing installed from the surface plus the required stickup but exclusive of louvered well screen.

4.03 LOUVERED CASING

A. Payment for the louvered well screen installation will be based on measurement of vertical feet of louvered well screen installed exclusive of blank casing, complete in place. Payment for blank casing and louver screen includes furnishing and installing of centralizers.

4.04 SOUNDING PIPE

A. Payment for the sounding pipe shall be based on measurement of vertical feet of pipe installed from the surface plus the required stickup. Access port materials shall be included in the unit price of the sounding pipe.

4.05 GRAVEL FEED TUBE

A. Payment for the gravel feed tube shall be based on measurement of vertical feet of pipe installed from the surface plus the required stickup.

****END OF SECTION****

SECTION 02680

GRAVEL PACK, INTERMEDIATE SEALS, AND GROUT SEAL

PART 1 -- GENERAL

1.01 GENERAL REQUIREMENTS

A. SCOPE:

1. This section includes materials and installation of filter gravel pack, and grout seal.

2. The requirements of Section 02671 apply to this section.

B. RELATED WORK:

1. The following specification sections are referenced herein:

Section	Title
Section 02671	WATER WELL

1.02 REFERENCES

A. The publications referred to hereinafter form a part of this specification to the extent referenced. The publications are referred to in the text by the basic designation only. The latest edition of referenced publications in effect at the time of the bid shall govern. In case of conflict between the requirements of this section and the listed references, the requirements of this section shall prevail.

Reference	Title
ASTM C150	Standard Specification for Portland Cement

1.03 SUBMITTALS

A. The following information shall be submitted for review:

1. Submit a gradation description, sample, and certified sieve analysis of filter gravel pack materials to be delivered to the sites.

2. Grout seal mix design.

PART 2 -- PRODUCTS

2.01 FILTER GRAVEL PACK

A. Gravel for the filter gravel pack shall be hard, water-worn gravels, washed clean of silt, sand, dirt, and foreign matter. Do not use crushed gravel. Gravel shall be well-rounded and shall have a uniformity coefficient less than 2.5. All gravel is subject to review by the District's Representative prior to use in the packing process. Gravel shall be of the type produced by Cemex's Lapis Lustre Plant. The gradation of the gravel pack material shall be Cemex's 8 x 16 (8 mesh) blend for the Roseview Park Well. Cemex 8 x 16 blend gravel shall also be used for bidding the Coyle Well .

2.02 INTERMEDIATE SEALS

A. Intermediate seal material shall be size-graded bentonite clay pellets which exhibit a high swelling capability. The seal material shall be Baroid's 3/8-inch HOLEPLUG or equivalent.

2.03 GROUT SEAL

A. Cement shall conform to ASTM C 150, Type II.

B. The material used for the grout seal outside the casing shall be a sand-cement grout. The grout mix shall consist of not more than two parts by weight of sand, one part by weight of cement, to 7 gallons of water per sack of cement, unless otherwise approved by the District's Representative.

PART 3 -- EXECUTION

3.01 STORAGE AND HANDLING OF GRAVEL

A. The gravel shall be delivered to the sites in "Super Bags" and shall be kept free of all foreign matter.

3.02 FILTER GRAVEL PACK

A. Prior to placement of the gravel envelope, thin the drilling fluid with clean water. Install filter gravel pack specified in the annular space between the borehole and the casing and screen through a temporary construction tremie pipe initially located 20-feet from the well's bottom. The tremie pipe shall be removed in approximately twenty-foot intervals when the gravel in the borehole reaches the bottom of the tremie pipe. During the gravel pack installation "sound" or "tag" the top of the gravel's depth at regular intervals. A gravel pump shall be used for installing the gravel.

B. During placement of the gravel in the annular space, add sodium hypochlorite in liquid form to the gravel at a uniform rate of one quart per cubic yard of gravel. Calcium based chlorine is unacceptable.

C. During the entire gravel packing operation, circulate clean water through the annular space between the wall of the borehole and well screen and casing. While the filter gravel pack is being placed, gently work a swab opposite all screened sections. As the gravel settles, add more. Continue this operation until there is no further measurable settlement of the filter gravel pack.

D. Upon completion of this operation and after removal of the swab, remove rock, sand, and foreign materials from the casing by bailing. Refill the annulus with filter gravel to the level as directed by the District's Representative. Add chlorine to this gravel as described in Part 3.02.B of this Section.

E. Record the volume of filter gravel used. The volume shall not be less than the calculated volume of the annular space between the wall of the borehole based upon the caliper survey and the casing and screen diameters. A quantity less than the computed volume will be considered as an indication of potential voids and measures shall be taken by the Contractor to eliminate the voids. Significant differences between estimated and actual volume of gravel installed may be grounds for well rejection.

F. Place a 3-foot thick bentonite pellet layer between the gravel pack and the grout surface seal to prevent migration of grout into the gravel pack material.

3.03 INTERMEDIATE SEALS

A. Prior to installing an intermediate seal, gravel volume calculations shall be performed to ensure that no gaps or bridging exists in the gravel pack below the seal location. Any gaps or bridging shall be settled by swabbing opposite the screen.

B. Install intermediate seals using the temporary construction tremie pipe. The Contractor shall continue to perform gravel packing operations immediately after intermediate seal material placement.

3.04 GROUT SEAL

A. When installation and settlement of the filter gravel pack and bentonite pellet layer is complete, fill the remaining open annular space between the casing and the borehole/surface casing with the grout mix specified using a grout tremie pipe. The tremie pipe shall be initially located 10-feet from the bottom of the annular space to be grouted. Once the bottom of the tremie pipe is covered with grout, the tremie pipe shall be removed in a manner that allows the bottom of the tremie pipe to remain covered throughout seal placement. Do not allow grout to free fall into the well. The grout seal shall extend to the ground surface, sealing the annular space between the 18-inch diameter casing and the 32-inch borehole/36-inch surface casing. Placement of the grout seal shall be witnessed and approved by a representative of the County of Sacramento, Environmental Management Department.

B. Upon completion of grouting, the level of grout shall be at ground level. After grouting operations are completed, leave the grout undisturbed for a period of not less than 24 hours.

C. Record the volume of grout used. The volume shall not be less than the calculated volume of the annular space between the wall of the borehole and the casing. Significant differences between estimated and actual volume of cement installed may be grounds for well rejection.

PART 4 -- MEASUREMENT AND PAYMENT

4.01 GRAVEL PACK, INTERMEDIATE SEALS, GROUT SEAL

A. Payment for consolidating the gravel pack by swabbing shall be included in the price for filter gravel pack installation.

B. Payment for the filter gravel pack will be based on measurement of vertical feet of gravel installed.

C. Payment for the intermediate seals will be based on measurement of vertical feet of seal material installed.

D. Payment for the grout seal will be based on measurement of vertical feet of grout installed.

****END OF SECTION****

SECTION 02681

PLUMBNESS TEST, ALIGNMENT TEST AND WELL DEVELOPMENT

PART 1 -- GENERAL

1.01 GENERAL REQUIREMENTS

A. SCOPE:

1. This section includes materials and installation for the plumbness test, alignment test, and development of the wells by surging and simultaneous airlifting, followed by pumping with a test pump.

2. The requirements of Section 02671 apply to this section.

B. RELATED WORK:

1. The following sections are referenced herein:

Section	Title
Section 02671	WATER WELL
Section 02680	GRAVEL PACK, INTERMEDIATE SEALS, AND GROUT SEAL

1.02 REFERENCES

A. The publications referred to hereinafter form a part of this specification to the extent referenced. The publications are referred to in the text by the basic designation only. The latest edition of referenced publications in effect at the time of the bid shall govern. In case of conflict between the requirements of this section and the listed references, the requirements of this section shall prevail.

1. American National Standards Institute/American Water Works Association (ANSI/AWWA)

Reference	Title
ANSI/AWWA A100	AWWA Standard for Water Wells

1.03 SUBMITTALS

A. The following information shall be submitted for review:

1. Submit the flowmeter calibration certificate prior to the commencement of development pumping.

2. Certified development records.

3. Plumbness and alignment test deflection records.

PART 2 -- PRODUCTS

2.01 PLUMBNESS AND ALIGNMENT TESTS

A. Test the well's plumbness and alignment by conducting a directional (Gyro) survey on the cased well from the top to bottom utilizing a firm retained by the Contractor. The plumbness and alignment of the well shall be determined in 10-foot intervals from the ground surface to the total well depth. Should the well vary from vertical in excess of 12 inches per 100 feet of depth, it may cause rejection of the well.

2.02 DISCHARGE LINE AND METER

A. Provide the temporary discharge piping required to convey well development and well testing water to the appropriate disposal area. The discharge line shall have a capacity of 2,500 gpm at the Coyle Well site and 3,500 gpm at the Roseview Park Well site. The discharge line shall include an in-line meter with six-digit, straight reading totalizer, registering in units of 1,000 gallons, together with a rate of flow indicator dial, which reads in gpm and is suitable for the expected flow range of 300 to 2,500 gpm at the Coyle Well site and 300 to 3,500 gpm at the Roseview Park Well site. The Contractor shall be responsible for the accuracy of the flow measurements and shall provide a calibration certificate for the flowmeter utilized. The flowmeter shall have an accuracy of ±2% and shall have been calibrated within three (3) months prior to project use.

2.03 TEST PUMP

A. Provide a test pump with variable speed prime mover. If an engine is used, provide an exhaust silencer. The pump furnished shall be of the deep well turbine type capable of pumping up to 2,500 gpm against 300 feet of total head at the Coyle Well site and 3,500 gpm against 300 feet of total head at the Roseview Park Well site. The bowl setting shall be at 190 feet at the Coyle Well site and 210 feet

at the Roseview Park Well site unless otherwise specified by the District's Representative. Provide a throttling device so that the discharge can be reduced to 300 gpm.

2.04 SAND TESTER

A. Provide a Rossum centrifugal sand sampler for measuring the amount of sand produced during pumping.

PART 3 -- EXECUTION

3.01 PLUMBNESS AND ALIGNMENT TESTING

A. Perform plumbness and alignment testing as detailed in Part 2.01 of this section. If the deviation from the vertical is greater than specified, take corrective measures specified by the District's Representative at no additional cost to the District.

3.02 DEVELOPMENT BY AIR LIFT SWABBING

A. Airlift swabbing for development of the well shall begin within 48 hours of grout seal placement by gently surging in the blank casing immediately above the highest section of well screen. The well shall be simultaneously air lift pumped. Air lift pumping shall continue by sections downward to the bottom of the lowermost screen and shall continue until no additional appreciable quantity of sand and mud is brought into the well. When directed by the District's Representative, the tool shall be removed and foreign material shall be removed by bailing.

B. The airlift swabbing tool shall consist of a double-flanged swab assembly with the swab flanges no more than ten (10) feet apart. The outside diameter of the swab rubbers shall be not more than 1/2-inch less than the I.D. of the well screen. The pipe section between the swab flanges shall have a sufficient number of openings to allow for passage of 400 gallons per minute (gpm). The air compressor and necessary equipment used for air lifting shall be capable of pumping 400 gallons per minute (gpm). The bottom of the pipe section below the swab flanges shall be closed.

3.03 DEVELOPMENT BY PUMPING

A. The rate of water being pumped from the well at commencement of development pumping shall begin at about 300 gpm and be gradually increased to a maximum of 2,500 gpm at the Coyle Well site and 3,500 gpm at the Roseview Park Well

site as the water clears. Every 15 to 30 minutes, stop the pump and allow the water in the pump column to flow back through the pump bowls and through the screened sections into the aquifer. This procedure, with increasing pumping rates, shall be repeated as development of the well continues and shall be done in a manner satisfactory to the District's Representative.

B. Continue development of the well until the well produces not more than 5 ppm of sand by volume measured and averaged over 15 minutes from commencement of pumping at a rate specified by the District's Representative (approximately 1,400 gpm at the Coyle Well site and 2,200 gpm at the Roseview Park Well site), until the discharged water is clear and clean, and until the specific capacity remains stable or until discontinued at the request of the District's Representative.

C. If, during the development operations, there is any indication of settlement of the gravel pack, add more gravel. Add sodium hypochlorite in liquid form to this gravel, as described in Section 02680-3.02.B. Record and report the quantity to the District's Representative.

PART 4 -- MEASUREMENT AND PAYMENT

4.01 PLUMBNESS AND ALIGNMENT TESTS

A. Payment for the plumbness and alignment tests shall be based on the contract lump sum for this item.

4.02 WELL DEVELOPMENT

A. Payment for each type of development will be based on measurement of actual hours of development of each type performed.

4.03 TEST PUMP INSTALLATION AND REMOVAL

A. Payment for the test pump installation and removal shall be a lump sum and shall not be included in the hourly price of development.

****END OF SECTION****

SECTION 02682

STEP DRAWDOWN, CONSTANT RATE TESTS, AND RECOVERY SURVEY

PART 1 -- GENERAL

1.01 GENERAL REQUIREMENTS

A. SCOPE:

1. Pumping tests shall include three tests; a step drawdown test with increasing discharge rate; a long-term continuous, constant rate time drawdown test; and a time- recovery test.

2. The requirements of Section 02671 apply to this section.

B. RELATED WORK:

1. The following sections are referenced herein:

Section	Title
Section 02671	WATER WELL

1.02 REFERENCES (DELETED)

1.03 SUBMITTALS

A. The following shall be submitted for review:

1. Certified copies of all development and test pumping records.

PART 2 -- PRODUCTS

2.01 ELECTRICAL DEPTH GAUGES

A. Provide two electrical depth gauges capable of indicating changes in water level to the nearest 1/10-foot. Provide assistance to District's Representative for supplemental measurements when required.

2.02 PERSONNEL

A. Provide qualified personnel on a 24-hour basis during both the step drawdown and long-term pumping tests to operate the pumping test equipment.

PART 3 -- EXECUTION

3.01 TESTING SCHEDULE

A. After well development with the test pump is complete, commence the well pumping tests. Schedule all tests sufficiently in advance per Section 02671-1.01F, so that the District's Representative can be onsite throughout each testing period.

3.02 STEP DRAWDOWN TEST

A. For this well test at the Coyle Well site, operate the pump initially at a rate of approximately 1,000 gpm. The pumping rate will then be increased by 500-gpm increments at uniform two-hour intervals until the well has been tested at approximately 2,500 gpm.

For this well test at the Roseview Park Well site, operate the pump initially at a rate of approximately 1,500 gpm. The pumping rate will then be increased by 500-gpm increments at uniform two- hour intervals until the well has been tested at approximately 3,000 gpm.

B. During the tests, the Contractor will record the time, pumping level, discharge rate, and rate of sand production. See Part 3.04 of this section for recording instructions.

3.03 LONG-TERM PUMPING TEST

A. A long-term, continuous, constant rate, time-drawdown test shall commence not less than 24 hours and not more than 48 hours after the completion of the step drawdown test. The rate of pumping shall be between 1,000 and 2,000 gpm at the Coyle Well site and between 2,000 and 3,000 gpm at the Roseview Park Well site, and shall be determined by the District's Representative. The Contractor shall ensure that the pumping rate selected remains constant throughout the tests. The test duration shall be 24 hours or of a duration that will result in a straight line plot of at least four consecutive measurements of water level drawdown when plotted against the logarithm of elapsed time. However, the tests shall not be less than 12 hours in length. When the test is completed and the pump stopped, the Contractor shall measure recovery of the water level in the well for a period of approximately 8 hours. See Part 3.04 of this section for recording instructions.

B. During the long-term test if the rate of water pumped falls below or above the designated flow by 5 percent or more for a period of greater than 15 minutes, discontinue the test until the water level in the well recovers and stabilizes. Repeat the test. No payment will be made for the incompleted test.

C. One hour prior to the completion of the 24 hour, constant rate, pumping test; the Contractor shall retain the services of a State-certified laboratory to collect, preserve, transport, and conduct water quality testing on a water sample. Conduct water quality testing in accordance with Chapter 15 of the California Code of Regulations, Title 22 "Domestic Water Quality and Monitoring".

The water quality testing shall include the following:

1. Inorganics (Section 64432)
2. Nitrate, Nitrite (Section 64432.1)
3. Asbestos (Section 64432.2)
4. Secondary Standards (Section 64449, Table 64449-A)
5. Secondary Standards (Section 64449, Table 64449-B)
6. General Mineral (Section 64449 (c) (2))
7. Volatile Organic Chemicals (Section 64444, Table 64444-A (a))
8. Non-Volatile Synthetic Organic Chemicals (Section 64444, Table 64444-A (b))
9. Unregulated (Volatile) Organic Chemicals (Section 64450, Table 64450-A)
10. Unregulated Organic Chemicals (Section 64450, Table 64450-B)
11. Unregulated Organic Chemicals (Section 64450, Table 64450-C)
12. Unregulated Inorganic Chemicals (Section 64450, Table 64450-D)
13. Natural Radioactivity (Section 64441)
14. Man-Made Radioactivity (Section 64443)
15. Dissolved Arsenic
16. Dissolved Manganese and Dissolved Iron
17. Radon and Radium 228
18. Hexavalent Chromiun
19. Perchlorate
20. NDMA

D. When the aquifer test and recovery test are complete, remove the test pump and clean the well of all accumulated sediment and foreign material.

3.04 PUMPING AND RECOVERY TEST RECORDS

A. Contractor shall measure and record the depth to water at the pumping well during the step drawdown test, constant-rate test and recovery test on forms to be provided by the District's Representative according to the following schedule:

1. Measure and record depth to static water level.

2. Turn pump on as requested by the District's Representative, at time (t) = 0.

3. Accurately measure and record depth to water at the pumping well and at each change in flow rate as follows:

   a. Each minute, from t = 1 to t = 12
   b. Each 2 minutes, from t = 14 to t = 20
   c. Each 5 minutes, from t = 25 to t = 50
   d. Each 10 minutes, from t = 60 to t = 120
   e. Each 15 minutes, from t = 135 to t = 1440

B. In case of failure of the pump operation for a period greater than one percent of the elapsed pumping time from t = 0, the test shall be suspended until the static water level again has been attained. Should the test be aborted as a result of a deficiency, malfunction, or other reason on the part of the Contractor's equipment or personnel, all time consumed in waiting for complete water level recovery and in resuming the pump test to the point where it was aborted or suspended shall be at no cost to the District.

3.05 DEVELOPMENT AND TEST PUMPING RECORDS

A. Provide certified copies of all development and test pumping records to the District's Representative.

PART 4 -- MEASUREMENT AND PAYMENT

4.01 TEST PUMPING

A. Pump operation during well testing will be measured and paid for by the hour of pump operation.

B. No payment will be made to the Contractor for pumping tests interrupted by the malfunctioning or failure of pumping equipment, or for any standby time associated with interrupted or aborted tests.

C. Payment for the final water quality sampling and testing shall be based on the contract lump sum for this item.

END OF SECTION

SECTION 02683

TELEVISION WELL SURVEY, WELL DISINFECTION AND CAPPING

PART 1 -- GENERAL

1.01 GENERAL REQUIREMENTS

A. SCOPE:

1. This section includes a television well survey, supplying the specified disinfectant to the well, and well capping.

2. The requirements of Section 02671 apply to this section.

B. RELATED WORK:

1. The following specification sections are referenced herein:

Section	Title
Section 02671	WATER WELL
Section 02680	GRAVEL PACK, INTERMEDIATE SEALS, AND GROUT SEAL

1.02 REFERENCES (DELETED)

1.03 SUBMITTALS

A. The following shall be submitted for review:

1. Videotape of television survey – 3 copies in CD form.

PART 2 -- PRODUCTS

2.01 DISINFECTANT

A. The sodium hypochlorite in liquid form, as specified in Section 02680-3.02B, used for disinfecting the well shall be of such volume and strength and shall be so

applied that a concentration of at least 100 mg/l of chlorine shall be obtained in all parts of the well water plus the borehole volume at the well screens.

PART 3 -- EXECUTION

3.01 TELEVISION WELL SURVEY

A. The Contractor shall run a color television survey of the entire well, from top of casing to total depth, in the presence of the District's Representative. The survey shall be performed using a video camera with two (2) camera lenses accompanied by the appropriate light sources. One lens shall be the conventional fish-eye and the other shall be a side scan wide-angle lens for viewing the interior of the casing directly. The survey shall be recorded in color and on CD which shall show the date of survey, and a continuous forward and reverse display of the depth of the camera, in feet with an accuracy of 2 feet in 1,000 feet. One (1) copy of this CD shall be provided to the District's Representative on completion of the survey and remaining copies to the District within five days after completion of the television well survey.

3.02 DISINFECTION

A. Foreign material shall be removed by bailing and the specified quantity of chlorine solution shall be added to the well via an injection line submerged approximately 100 feet below the static water level. After chlorine insertion, the well shall be agitated for 2 hours utilizing a swab or bailer.

3.03 WELL CAPPING

A. Tack weld a 1/4-inch by 20-inch O.D. circular steel plate to the top of the well casing. The plate shall be placed so that it rests flush with the casing and its edges are evenly extended beyond the edges of the casing. The Contractor shall be responsible to keep the casing secure at all times prior to installing the plate.

PART 4 -- MEASUREMENT AND PAYMENT

4.01 TELEVISION WELL SURVEY

A. Payment for the television well survey shall be based on the lump sum for this item in the Bidding Schedule.

4.02 DISINFECTION AND WELL CAPPING

A. Payment for the disinfection and well capping required shall be based on the lump sum for this item in the Bidding Schedule.

****END OF SECTION****

PART C -- FIGURES

Source: Stevens Consulting

NOT TO SCALE

Brown AND Caldwell	PROJECT 139718	SITE Sacramento Surburban Water District	Figure 1
	DATE 12/13/2010	TITLE Regional Location	

P:\139000\139718 - SSWD Well N37-N38 Design and CM\GRAPHICS

Source: Stevens Consulting

NOT TO SCALE

Brown AND Caldwell	PROJECT 139718	SITE Sacramento Surburban Water District	Figure
	DATE 12/13/2010	TITLE Location of Projects Sites	2

P:\139000\139718 - SSWD Well N37-N38 Design and CM\GRAPHICS

Source: Google Earth, April 2010

N

0 10 20 Feet

SITE	Sacramento Surburban Water District
TITLE	Roseview Park Well N37 Proposed Well Site Layout - Option 2
Brown AND Caldwell	PROJECT 139718 DATE 9/20/2010
	Figure 3

P:\139000\139718 - SSWD Well N37-N38 Design and CAD\GRAPHICS

Source: Google Earth, April 2010

N

0 10 20 Feet

SITE	Sacramento Surburban Water District
TITLE	Coyle Well N38 Proposed Well Site Layout - Option 2
Brown AND Caldwell	PROJECT 139718 DATE 09/20/2010
	Figure 4

P:\39000\139718 - SSWD Well N37-N38 Design and CAD\GRAPHICS

Verner Avenue Well and Treatment Facilities Plans and Specifications

SACRAMENTO SUBURBAN

WATER DISTRICT

SPECIFICATIONS FOR CONSTRUCTION
Of the

VERNER AVE. WELL AND TREATMENT FACILITIES

November 2008

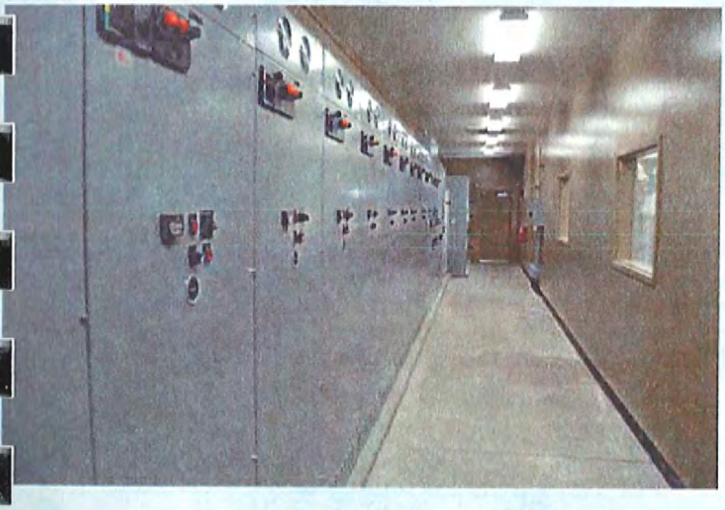

Prepared by:

Luhdorff & Scalmanini Consulting Engineers

Woodland, CA

TECHNICAL PROVISIONS

Division 1 – General Requirements **Page No.**

Project Summary 01100-1
Mobilization 01300-1
Project Records and Submittals 01330-1
Reference Standards and Abbreviations 01420-1
Temporary Traffic Control 01555-1
Temporary Erosion Control 01575-1
Preservation and Cleanup 01740-1
Project Closeout 01750-1

Division 2 – Site Construction

Clearing and Grubbing 02200-1
Earthwork 02300-1
Trench Excavation and Backfill 02320-1
Paving 02740-1
Sprinkler Irrigation 02810-1
Chain Link Fencing 02820-1
Landscaping 02900-1

Division 3 - Concrete

Concrete 03300-1
Pre-Cast Concrete 03400-1
Grout 03600-1

Division 4 - Masonry

Concrete Masonry Units 04200-1

Division 5 – Metals

Metal Fabrications 05500-1

Division 6 – Wood and Plastic

Rough Carpentry 06100-1
Prefabricated Wood Trusses 06170-1
Fiberglass Grating 06600-1

Division 7 – Thermal and Moisture Protection **Page No.**

Preformed Ribbed Metal Roofing..... 07410-1
Joint Sealants……07900-1

Division 8 – Doors and Windows

Metal Doors and Frames..... 08110-1
Finish Hardware……08710-1

Division 9 - Finishes

Painting 09900-1

Division 10 - Building

Building..... 10050-1
Signs and Safety Equipment 10440-1

Division 11 – Equipment – (Not Used)

Division 12 – Furnishings – (Not Used)

Division 13 – Special Construction – (Not Used)

Division 14 – Conveying Systems – (Not Used)

Division 15 – Mechanical

Pipe (Station, Distribution, and Drainage)..... 15025-1
Valves and Related Appurtenances 15110-1
Submersible Pump Components..... 15133-1
Chemical Feed Equipment..... 15140-1
Disinfection of Well, Pump, and Piping 15145-1
Performance Testing and Facility Startup..... 15950-1

Division 16 - Electrical

Electrical 16010-1
Conduit, Boxes & Grounding 16110-1
Wire, Fuses & Terminal Blocks..... 16120-1
Automatic Transfer Switch 16250-1
Panelboard and Power Transformer..... 16470-1
Variable Frequency Drive..... 16481-1
Solid State Soft Starter..... 16482-1
Factory and Field Testing 16600-1

Control Panel 16905-1
PLC and OI Hardware 16910-1
PLC & OI Applications Programming 16915-1
SCADA System Applications Programming..... 16925-1
Instrumentation 16940-1

Appendix A – Storm Water Pollution Prevention Plan, May 2006

Appendix B - Plans

PART 5 - TECHNICAL SPECIFICATIONS

SECTION 01100 - PROJECT SUMMARY

PART 1 - GENERAL

1.01 PROJECT DESCRIPTION

The work to be completed under this Contract consists of furnishing all materials, labor, equipment, fuel, and tools required to construct one pump station for the Sacramento Suburban Water District as illustrated on the plans, and detailed in these specifications. The work includes, but is not limited to the following:

A. Clearing and grading the area around the new pump station. This work is to be accomplished prior to construction of the building, and all underground facilities. Only trees identified as such can be removed. Also refer to the arborist report, on file with the District.

B. Construction of foundations, slabs, and structures for the pump pedestal, motor control center, electric utility pad, building and drainage structures.

C. Construction of a concrete masonry unit building with a metal, removable roof section for well and pump access. It is important to note that the removable section is design so that when the roof and door headers are removed (by removal of bolts and screws only), there is a clear, unobstructed path for working on the well and/or pump assembly. It is further intended that the doors will remain hanging during roof removal and can be shut to assist in securing the building during periods when the roof is removed.

D. Installation of a 200 horsepower submersible pump and motor, drop pipe (column) assembly, power cable, surface plate and elbow, and water level measuring equipment. This equipment is to be installed by a firm licensed, actively engaging and specializing in the full-time sales, repair and installation of large horsepower submersible pumps.

E. Installation of station and underground piping to include valves, flanges, gages, meters and all other related appurtenances to connect to the well pumping facility to the existing drinking water distribution piping.

F. Installation of a sanitary sewer drop box and pipeline to convey wastewater to the existing sanitary sewer system.

G. Installation of all storm drain facilities including piping, drop inlets, manholes, and related appurtenances to connect to the existing county/city storm drain system.

H. Installation of a chemical feed system and metering equipment including metering pumps, injection assemblies, and all appurtenant tubing, valving, and spare parts.

I. Installation of one 460-volt, 60-Hz, 3-phase, 4-wire electrical service including underground primary and secondary conduits and conductors from the transformer pad to the motor control center; the motor control center; conduits, antenna, mast and coax cable for the SCADA system; conduits for a future booster building and/or storage facilities; and, all conduits, wiring, heaters, fans, and switches.

J. Painting of all components as specified herein.

K. Placing and compacting the base and asphalt concrete paving for the parking and roadway areas. Upon completion, the entire paved area will be slurry-coated in accordance with these Specifications.

L. Construction of a man gate, a rolling gate, and a double swing gate. The rolling gate shall be installed complete with a gate operator, loop detectors, obstruction detection device, knox box for Fire District access, and operating transmitters (key fobs). Work will also include the installation of vinyl-coated 8 foot high chain link fencing, and a post/cable vehicle barriers shown in the locations on the plans.

M. Installation of landscaping, along with all controls, valving, wire, piping, sprinkler heads, shrubs and other landscape plants, all as shown on the plans.

N. Installation of the driveway, and curbs, along with all associated grading, as shown on the plans. Work will also include the installation of a new curb, gutter and sidewalk along Verner Avenue.

O. Installation of site signage, for ready identification of the facility.

P. Restoration and clean-up of the site after project completion.

Q. Performance testing of all components of the pump station, including startup training and orientation of SSWD operations employees.

R. Disinfection of the well, pump, and all piping and fittings.

S. Record keeping of submittals and performance testing.

T. Submission of all operation and maintenance manuals.

1.02 OWNER AND ENGINEER

A. Owner

Sacramento Suburban Water District
3701 Marconi Avenue, Suite 100
Sacramento, CA 95821-5303
Phone: (916) 972-7171; Fax: (916) 972-7194
Contact person is: Warren Jung, SSWD Capital Improvements Engineer

B. Engineer

Luhdorff and Scalmanini Consulting Engineers
500 First Street
Woodland, CA 95695
Phone: (530) 661-0109; Fax: (530) 661-6806
Contact person is: William Gustavson, Principal Project Manager.

1.03 EXAMINATION OF DOCUMENTS AND SITE

Before submitting a proposal, each bidder shall carefully examine the Drawings, Bid Documents, and Specifications. Bidder shall visit the site and fully inform themselves as to all existing conditions and limitations applying to the work. If, after such examination and study, it appears that any change from the Drawings and Specifications should be allowed, the bidder shall so state in writing seven (7) days prior to submission of bids.

By the act of submitting a proposal, each bidder shall be deemed to have made such examinations of the Drawings, Specifications, and premises, and it will be assumed that the bidder is therefore familiar with the entire scope of the project and has based the proposal upon the work described in the Drawings and Specifications and upon all existing conditions and limitations applying to his work.

1.04 MATERIALS FURNISHED BY CONTRACTOR

All materials furnished by the Contractor shall be new, in first-class condition and subject to the approval of the Engineer.

1.05 CONTRACTOR'S FACILITIES

The Contractor shall make arrangements for providing sanitary facilities for their personnel. Locations of sanitary facilities, storage areas, and other Contractor installations shall be subject to prior approval of the Engineer.

1.06 WORK HOURS

Work hours shall be Monday through Friday 7:00 AM to 6:00 PM, with no work allowed on weekends or holidays.

1.07 TEMPORARY UTILITIES AND SITE OPERATIONS

A. Electricity

The Contractor shall arrange with the local utility to provide adequate electrical service at a mutually agreed upon location. The Contractor shall provide, at its own cost, all electrical power needed for construction, general and security lighting, and all other purposes as deemed necessary.

B. Construction Water

Water shall be provided by the Owner at the Owner's expense at a location to be determined by the Owner.

C. Discharge and/or Containment of Construction Waters

The Contractor shall exercise care and diligence to limit damage caused by erosion and sediment loosened by the Contractor's operation and shall take all precautions necessary to protect adjacent properties and drainage ditches. See Section 01575 – TEMPORARY EROSION for further details. Additionally, a Storm Water Pollution Prevention Plan (SWPPP), dated May 2006, has been developed for this project. A copy of this document is included in the Appendix.

1.08 SAFETY AND PRECAUTIONS

The Contractor shall conduct operations in accordance with the rules and regulations of the Local Government, California Division of Industrial Safety, and the current requirements of the Occupational Safety and Health Administration (Cal. OSHA). Contractor is responsible for site conditions, including public safety, dust control, and sediment control, continually and not limited to normal working hours. Contractor shall provide contact information for representatives available during working hours and during after-hours, weekends, and holidays.

1.09 PERMIT REQUIREMENTS

The Contractor shall comply with the terms and conditions of all appropriate licenses or permits.

A. Encroachment Permits

Work within and along Verner Avenue falls under the jurisdiction of the City of Citrus Heights. Plans have been submitted to the City for approval of the issuance of an encroachment permit. Once approval has been obtained, the Contractor shall obtain, at his or her own expense, the encroachment permit from the City. A traffic control plan, in accordance with Section 01555 – TEMPORARY TRAFFIC CONTROL will be required as part of the encroachment permit application. To secure the permit, the Contractor shall contact the City of Citrus Heights at (916) 727-4770.

B. Building Permit

The District's Engineer will inspect the construction of the building and all electrical work. The Contractor will not be required to obtain a permit for these items from the City.

C. Sanitary and Storm Sewer Permits

The District will secure a Sanitary Sewer Permit from the Sacramento Regional County Sanitation District (SRCSD) and the County of Sacramento for connection to the storm drain.

PART 2 - MATERIALS (Not used)

PART 3 - EXECUTION (Not used)

PART 4 - MEASUREMENT AND PAYMENT

No separate payment will be made for work in this Section. Payment for work in this Section shall be included as part of the applicable Lump Sum or Unit Prices stated in other Sections.

-END OF SECTION-

SECTION 01300 – MOBILIZATION

Bid Item No. 1

PART 1 - GENERAL

1.01 SCOPE

This Section covers mobilization which shall consist of preparatory work and operations, including, but not limited to, those necessary for the movement of personnel, equipment, supplies and incidentals to the project site; for the establishment of all offices, buildings, sanitation and other facilities necessary for work on the project; and for all other work and operations which must be performed or costs incurred prior to beginning work on the various contract items at the project site, complete.

PART 2 - MATERIALS (Not used)

PART 3 - EXECUTION

3.01 MOBILIZATION

Location of sanitary facilities, storage areas, parking areas and other Contractor installations shall be subject to the prior approval of the Engineer. The following items shall be included in the Contractors mobilization:

A. The Contractor shall move all of the necessary plant and equipment that will be required for the first month of operation onto the job site.

B. The Contractor shall provide any needed temporary construction power and lighting facilities.

C. The Contractor shall comply with all fire protection requirements.

D. The Contractor shall provide on-site sanitary facilities.

E. The Contractor shall obtain all necessary permits. See Section 01330–PROJECT RECORDS AND SUBMITTALS for additional requirements.

F. The Contractor shall comply with all OSHA required notices and establish safety programs.

G. The Contractor shall have the construction superintendent on the job site full time.

PART 4 - MEASUREMENT AND PAYMENT

A. When the monthly progress payment estimate of the amount earned, not including the amount earned for Mobilization, is 5-percent or more of the original contract amount, 50-percent of the contract item price for mobilization shall be included in said estimate for payment.

B. When the monthly progress payment estimate of the amount earned, not including the amount earned for Mobilization is 50-percent or more of the original contract amount, the total amount earned for Mobilization shall be 100-percent of the contract item price for mobilization and said amount shall be included in said estimate for payment.

C. The contract lump sum price paid for mobilization shall include full compensation for furnishing all labor, material, tools, equipment, and incidentals for doing all the work involved in mobilization as specified above.

D. No adjustment shall be made what-so-ever to the original lump sum item price of mobilization. If other contract items are adjusted, and if the costs applicable to such item work include mobilization cost, such mobilization will be deemed to have been recovered by the payments made for mobilization, and will be excluded from consideration in determining compensation.

E. The retention provisions contained in this contract shall not apply to the lump sum item price of mobilization

Mobilization shall be paid for on a Lump Sum basis as stated in the **Bid Item Schedule** for the item listed below and shall be no more than five percent (5%) of the Bid Total.

Bid Item No. 1 – MOBILIZATION

-END OF SECTION-

SECTION 01330 - PROJECT RECORDS AND SUBMITTALS

Bid Item No. 2

PART 1 - GENERAL

1.01 SCOPE

This Section delineates the procedure the Contractor is to adhere to in the submission of documentation for material approval, and covers the records required of the Contractor following completion of the work.

PART 2 - MATERIALS (Not used)

PART 3 - EXECUTION

3.01 SUBMITTALS

A. Progress Schedule

Within seven (7) calendar days after receiving the Notice to Proceed and before any work is begun, the Contractor shall submit four (4) copies of a Progress Schedule (normally in bar chart form) showing estimated starting and completion dates for each part of the work. The dates of ordering and delivery of major materials and electrical and mechanical equipment shall be shown on the schedule. The first progress payment will not be issued until the progress schedule is submitted.

B. Supervisory Personnel

The Contractor shall submit a list of supervisory personnel who will be responsible for the performance of the Contract. The Contractor shall designate one (1) person who will have full decision-making authority to represent the Contractor on a daily basis at the project site. The list will include phone numbers where the personnel may be reached by the Engineer and Owner.

C. Shop Drawings

The term "shop drawings" includes drawings, diagrams, layouts, schematics, descriptive literature, illustrations, schedules, performance and test data, and similar materials furnished by the Contractor to explain in detail specific portions of the work required by the Contract.

At least fifteen (15) working days prior to the need for approval, the Contractor shall forward to Engineer, for approval, all submittals required by the individual sections of the specifications. Unless a different number is called for by an individual section, six (6) copies of each shop drawing, material description, and specification literature and three (3) specimens of each sample are required, all of which will be retained or

distributed by the Engineer. The Contractor shall submit whatever additional number of shop drawings and literature, in addition to the above requirements, that the Contractor wants returned. The Engineer may require the Contractor to submit a legible reproducible print in addition to the above copies. Contractor shall number each type of material separately and identify the use of each material.

All submittals shall be transmitted to the Engineer by mail or in person with the letter of transmittal included in these documents. The Engineer will return all reviewed submittals to the Contractor within fifteen (15) working days.

Contractor shall coordinate all such drawings, and review them for legibility, accuracy, completeness, and compliance with contract requirements, and shall indicate approval thereon as evidence of such coordination and review. Shop drawings submitted to the Engineer without evidence of the Contractor's approval will be returned for resubmission.

Approval by the Engineer shall not relieve the Contractor from responsibility for any errors or omissions in such drawings, nor from responsibility for complying with requirements of this Contract, except with respect to variations described and approved in accordance with the Paragraph below.

If shop drawings show variations from contract requirements, the Contractor shall describe such variations in writing, separate from the drawings, at time of submission. All such variation must be approved by the Engineer.

1. Engineer’s Approval
   The Engineer will indicate approval or disapproval of each submittal, and the reasons for disapproval.

   a. If no corrections are required, the copies will be returned marked "NO EXCEPTIONS TAKEN." Work may begin immediately on incorporating the material and equipment covered by the submittal into the project.

   b. If limited corrections are required, the copies will be returned marked "MAKE CORRECTIONS NOTED." Work may begin immediately on incorporating the material and equipment covered by the corrected submittal into the project.

   c. If insufficient or incorrect data has been submitted, the copies will be returned marked "AMEND & RESUBMIT." No work incorporating the material and equipment covered by this submittal into the project may begin until the submittal has been revised, resubmitted, and returned

marked either "NO EXCEPTIONS TAKEN" or "MAKE CORRECTIONS NOTED."

d. If the submittal is unacceptable, the copies will be returned marked "REJECTED - SEE REMARKS." No work incorporating the material and equipment covered by this submittal into the project may begin until a new submittal has been made and returned marked either "NO EXCEPTIONS TAKEN" or "MAKE CORRECTIONS NOTED."

e. The Contractor shall not change any drawing after it has been marked “NO EXCEPTIONS TAKEN” or “MAKE CORRECTIONS NOTED,” or change any approved equipment or material without written permission of the Engineer.

f. If more than three (3) submittals for a single item are required because of incorrect or insufficient data, or the submittal is unacceptable, or because the Contractor wishes to change previously approved material, then all costs incurred by the Engineer for the additional review shall be deducted from monies due the Contractor.

D. Certificates

For those items called for in individual sections, the Contractor must furnish certificates from manufacturers, suppliers, or others certifying that materials or equipment being furnished under the Contract comply with the requirements of these specifications.

Certificates of compliance shall conform to the provisions in Section 6-1.07 "Certificates of Compliance" of the CalTrans Standard Specifications and these special provisions.

Certificates of compliance from the Contractor, suppliers, and/or manufacturers, shall clearly indicate that the material to be delivered to the jobsite will meet all requirements of the specifications. A certificate of compliance shall include, but not be limited to the project title, delivery location, date (or approximate date) of delivery, name of the material with appropriate classification or model numbers, quantity, name of the manufacturer, statement of compliance with all requirements of the specifications, and certifier's name, title and signature. In addition, a factory or mill certification (laboratory test report), if required by the specifications, shall be submitted with certificate of compliance. The factory or mill shall not substitute the certificate of compliance, unless it contains all information required for a certificate of compliance as described above.

Insufficient, incomplete, or unclear certificates shall be rejected and shall be resubmitted. The Contractor shall be responsible for all delays caused by the resubmittals.

E. Samples

Samples shall be of sufficient size to clearly illustrate functional characteristics and full range of color, texture, and pattern.

3.02 NOTIFICATIONS

The Contractor shall notify the Engineer at least seven (7) calendar days prior to commencement of the construction and shall furnish the Engineer at least one (1) day notice when inspections are required.

3.03 RECORDS

The Contractor shall provide, prior to acceptance of all work, all records as herein specified and as specified in the individual sections of the Contract Documents. Six (6) sets of all records shall be furnished to the Engineer for review, approval and distribution to the interested parties.

All submitted records shall be contained in a manual or manuals consisting of 8-1/2 x 11 inch hardback 3-ring ("D" ring) binders and indexed. Included in each manual shall be catalog data on each item, together with parts lists, description of operation, maintenance information, shop drawings, wiring and riser diagrams, along with all test data. Catalogs and data in the manual shall be neat, clean copies. Drawings shall be accordion folded to letter size and installed in an envelope within the manual. An index shall be provided, which shall list all contents in an orderly manner, with the respective equipment suppliers' name, address and telephone number. The manufacturer's recommended servicing instructions shall also be included. Diagrams shall be complete for each system installed. Provide divider sheets with identifying tabs between each category.

3.04 AS-BUILT DRAWINGS

The Contractor shall maintain a separate, neat, and legible set of construction drawings showing as-built conditions of all constructed facilities. Changes shall be shown to scale in red on the appropriate Drawings. The locations of installed underground and hidden utilities will be shown and dimensioned to appropriate reference points. No work shall be permanently concealed until the required information has been recorded.

Where the Drawings are not of sufficient size, scale, or detail, the Contractor shall furnish his/her own drawings for incorporation of details and dimension. In such cases, the Contractor shall provide a reproducible set of his/her drawings, suitability cross referenced to the Contract Drawings.

The as-built drawings shall be maintained up to date at all times. Prior to any progress payments, the Engineer shall review the status of the as-built construction drawings. The Engineer shall withhold approval of progress payments until the as-built drawings are up to date.

Upon completion of the Contract, the Contractor shall furnish two (2) satisfactory sets of as-built construction drawings. Drawings shall be certified that conditions shown are as-built. Final payment shall be withheld until the as-built construction drawings are received and accepted by the Engineer.

PART 4 - MEASUREMENT AND PAYMENT

Project Records and Submittals, satisfactorily completed, shall be paid for on a Lump Sum basis as stated in the **Bid Item Schedule** for the item listed below and shall be no more than one percent (1%) of the Bid Total.

Bid Item No. 2 - PROJECT RECORDS AND SUBMITTALS

-END OF SECTION-

SECTION 01420 – REFERENCE STANDARDS AND ABBREVIATIONS

PART 1 – GENERAL

1.01 REFERENCE STANDARDS

The Contract Documents contain references to various standard specifications, code practices, and requirements for materials, work quality, installation, inspections, and tests, which are published and issued by various organizations, societies and associations. Such references are hereby made a part of the Contract Documents to the extent required.

When such references are specified, and the effective dates are not given, it shall be understood that the current edition or latest revision thereof and any amendments or supplements in effect on the date that the work is advertised for Bids, shall govern the work.

Reference standards are not furnished with the Contract Documents since the Contractor, subcontractors, manufacturers, and the trades involved are assumed to be familiar with their requirements. The Engineer will furnish, upon request, information as to how copies of specified standards may be obtained.

1.02 INTERPRETATION OF SPECIFICATIONS AND DRAWINGS

The Special Provisions, Description of Work, Construction Details, Drawings, Shop Drawings, Contract Change Orders, and all other supplementary documents are essential parts of the Contract Documents, and a requirement occurring in one is as binding as though occurring in all. They are intended to be complementary and to describe and provide for complete work.

In resolving conflicts resulting from errors or discrepancies in any of the Contract Documents, the order of precedence shall be as follows:

A. Permits from other agencies as may be required by law
B. Addenda, Supplemental Agreements and Change Orders, the one dated later having the precedence over another dated earlier.
C. Agreement
D. Contractor's Bid (Bid Form)
E. General Requirements
F. Supplementary General Conditions
G. Invitation to Bid
H. Instructions to Bidders
I. General Conditions
J. Technical Specifications (Section 01100 and all other Sections following)
K. Referenced Standard Specifications
L. Drawings

With reference to the Drawings the order of precedence is as follows:

A. Figures govern over scaled dimensions
B. Detail or shop drawings govern over general drawings
C. Addenda/Change Order drawings govern over any other drawings
D. Contract Drawings govern over standard drawings
E. Specifications shall govern over Plans, except where items are shown on the Plans and are not specifically included in the Specifications, then the Plans shall govern.
F. Specifications shall govern over shop drawings.

The provisions or the Contract Documents shall take precedence over any Laws or Regulations applicable to the performance of the work unless such an interpretation of the provisions of the Contract Documents would result in a violation of such Law or Regulation.

Should it appear that the work to be done or any of the matters relative to the project are not sufficiently detailed or explained in the Contract Documents, the Bidder or Contractor shall apply in writing to the Engineer for further explanations as may be necessary.

1.03 LAWS, CODES AND REGULATIONS

All materials, installation, and construction shall comply with the applicable provisions of current laws, safety rules and regulations of the City of Citrus Heights, County of Sacramento, the State of California, the Federal Government, and any other applicable authority. In this connection, the Contractor's special attention is directed to the following:

UBC	-	Uniform Building Code
OSHA	-	Occupational Safety and Health Administration
ACI	-	American Concrete Institute
ASTM	-	American Society for Testing and Materials
AWWA	-	American Water Works Association
AISC	-	American Institute of Steel Construction
EPA	-	Environmental Protection Agency
CEQA	-	California Environmental Quality Act
RCRA	-	Resource Conservation and Recovery Act
NFPA	-	National Fire Protection Association

Whenever reference is made to "CalTrans Standard Specifications" it shall be understood to be the most recent addition of the State of California, Department of Transportation, Standard Specifications.

If any of these laws and standards should conflict with any of the Specifications contained herein, the Contractor shall notify the Engineer in writing and the Engineer shall resolve the conflict.

1.04 REGULATIONS RELATED TO HAZARDOUS MATERIALS

The Contractor shall comply with all EPA, OSHA, RCRA, NFPA, and any other Federal, State, and Local Regulations governing the storage and conveyance of hazardous materials, including petroleum products, for all work included in the Contract Documents.

1.05 ABBREVIATIONS

If the following abbreviations are used in these Specifications, the intent and meaning shall be interpreted as follows:

AA	-	Aluminum Association
AAMA	-	Architectural Aluminum Manufacturer's Association
AAR	-	Association of American Railroads
AASHTO	-	American Association of State Highway and Transportation Officials
AATCC	-	American Association of Textile Chemists and Colorists
ACI	-	American Concrete Institute
AFBMA	-	Anti-Friction Bearing Manufacturer's Association, Inc.
AFPA	-	American Forest Products Association
AGA	-	American Gas Association
AGMA	-	American Gear Manufacturer's Association
AHA	-	American Hardboard Association
AHAM	-	Association of Home Appliance Manufacturers
AI	-	The Asphalt Institute
AIA	-	American Institute of Architects
AISC	-	American Institute of Steel Construction
AISI	-	American Iron and Steel Institute
AITC	-	American Institute of Timber Construction
AMCA	-	Air Moving and Conditioning Association
ANS	-	American Nuclear Society
ANSI	-	American National Standards Institute, Inc.
APA	-	American Plywood Association or American Parquet Association, Inc.
API	-	American Petroleum Institute
APWA	-	American Public Works Association
ARI	-	Air-Conditioning and Refrigeration Institute
ASA	-	Acoustical Society of America
ASAE	-	American Society of Agricultural Engineers
ASCE	-	American Society of Civil Engineers
ASHRAE	-	American Society of Heating, Refrigerating, and Air Conditioning Engineers
ASLE	-	American Society of Lubricating Engineers
ASME	-	American Society of Mechanical Engineers
ASNT	-	American Society of Nondestructive Testing
ASQC	-	American Society for Quality Control
ASSE	-	American Society of Sanitary Engineers

ASTM	-	American Society for Testing and Materials
AWCI	-	American Wire Cloth Institute
AWPA	-	American Wood Preservers Association
AWPI	-	American Wood Preservers Institute
AWS	-	American Welding Society
AWWA	-	American Water Works Association
BBC	-	Basic Building Code, Building Officials and Code Administrators International
BHMA	-	Builders Hardware Manufacturer's Association
CABO	-	Council of American Building Officials
CBM	-	Certified Ballast Manufacturers
CCW	-	Counter Clockwise
CDA	-	Copper Development Association
CEMA	-	Conveyor Equipment Manufacturer's Association
CEQA	-	California Environmental Quality Act
CGA	-	Compressed Gas Association
CLPCA	-	California Lathing and Plastering Contractors Association
CLFMI	-	Chain Link Fence Manufacturer's Institute
CMA	-	Concrete Masonry Association
CRSI	-	Concrete Reinforcing Steel Institute
DCDMA	-	Diamond Core Drill Manufacturer's Association
DHI	-	Door and Hardware Institute
DIPRA	-	Ductile Iron Pipe Research Association
EIA	-	Electronic Industries Association
ETL	-	Electrical Test Laboratories
EPA	-	Environmental Protection Agency
FCC	-	Federal Communications Commission
FCI	-	Fluid Controls Institute
FM	-	Factory Mutual System
FPL	-	Forest Products Laboratory
HI	-	Hydronics Institute
HPMA	-	Hardwood Plywood Manufacturer's Association
IAPMO	-	International Association of Plumbing and Mechanical Officials
ICBO	-	International Conference of Building Officials
IEEE	-	Institute of Electrical and Electronics Engineers
IES	-	Illuminating Engineering Society
IME	-	Institute of Makers of Explosives
IP	-	Institute of Petroleum (London)
IPC	-	Institute of Printed Circuits
IPCEA	-	Insulated Power Cable Engineers Association
ISDSI	-	Insulated Steel Door Systems Institute
ISA	-	Instrument Society of America
ISEA	-	Industrial Safety Equipment Association
ISO	-	International Organization for Standardization
ITE	-	Institute of Traffic Engineers

MBMA	-	Metal Building Manufacturer's Association
MIL	-	Military Standards (DoD)
MPTA	-	Mechanical Power Transmission Association
MSS	-	Manufacturer's Standardization Society
MTI	-	Marine Testing Institute
NAAMM	-	National Association of Architectural Metal Manufacturers
NACE	-	National Association of Corrosion Engineers
NAGDM	-	National Association of Garage Door Manufacturers
NB	-	Boiler and Pressure Vessel Inspectors (alternate NBBPVI)
NBS	-	National Bureau of Standards (Now NIST)
NCCLS	-	National Committee for Clinical Laboratory Standards
NEC	-	National Electrical Code
NEMA	-	National Electrical Manufacturer's Association
NETA	-	International Electrical Testing Association
NFPA	-	National Fire Protection Association, or National Fluid Power Association, or National Forest Products Association
NISO	-	National Information Standards Organization
NLGI	-	National Lubricating Grease Institute
NMA	-	National Microfilm Association
NRCA	-	National Roofing Contractor's Association
NSF	-	National Sanitation Foundation
NWMA	-	National Woodwork Manufacturer's Association
NWWDA	-	National Wood Window and Door Association
OSHA	-	Occupational Safety and Health Administration
PCA	-	Portland Cement Association
PPI	-	Plastics Pipe Institute
RCRA	-	Resource Conservation and Recovery Act
RIS	-	Redwood Inspection Service
RMA	-	Rubber Manufacturer's Association
RVIA	-	Recreational Vehicle Industry Association
RWMA	-	Resistance Welder Manufacturer's Association
SAE	-	Society of Automotive Engineers
SAMA	-	Scientific Apparatus Makers Association
SDI	-	Steel Door Institute
SMA	-	Screen Manufacturer's Association
SMACCNA	-	Sheet Metal and Air Conditioning Contractors National Association
SPI	-	Society of the Plastics Industry, Inc.
SPIB	-	Southern Pine Inspection Bureau
SPR	-	Simplified Practice Recommendation
SRCSD	-	Sacramento Regional County Sanitation District
SSA	-	Swedish Standards Association
SSBC	-	Southern Standard Building Code, Southern Building Code Congress
SSPC	-	Society for Protective Coating
SSPWC	-	Standard Specifications for Public Works Construction
TAPPI	-	Technical Association of the Pulp and Paper Industry

TFI	-	The Fertilizer Institute
TIA	-	Telecommunications Industries Association
TPI	-	Truss Plate Institute
UBC	-	Uniform Building Code
UL	-	Underwriters Laboratories, Inc.
WCLIB	-	West Coast Lumber Inspection Bureau
WCRSI	-	Western Concrete Reinforcing Steel Institute
WEF	-	Water Environment Federation
WIC	-	Woodwork Institute of California
WOG	-	
WRI	-	Wire Reinforcement Institute, Inc.
WSP	-	Welded Steel Pipe
WWPA	-	Western Wood Products Association

PART 2 - MATERIALS (Not Used)

PART 3 - EXECUTION (Not Used)

PART 4 - MEASUREMENT AND PAYMENT

No separate payment will be made for Reference Standards and Abbreviations. Payment for work in this Section shall be included as part of the applicable Lump Sum or Unit Prices stated in other Sections.

-END OF SECTION-

SECTION 01555 - TEMPORARY TRAFFIC CONTROL

PART 1 - GENERAL

1.01 SCOPE OF WORK

A. The Contractor shall provide all equipment, materials, and personnel necessary to provide for traffic control along streets where work will be performed. Equipment includes, but is not limited to, lighting, signage, barricades, flags, and traffic cones.

B. The Contractor shall prepare a Traffic Control Plan in accordance with the State of California Department of Transportation and as specified herein.

1.02 QUALITY ASSURANCE

A. No changes or deviations from the approved detailed Traffic Control Plan shall be made, except temporary changes in emergency situations, without prior approval of the Engineer, and all agencies having jurisdiction.

B. The Contractor shall immediately notify the Engineer, and the agencies having jurisdiction of occurrences that necessitate modification of the approved Traffic Control Plan.

C. Contractor shall drive along the pipeline work alignment and coordinate with Owner to identify traffic control needs and high traffic areas that require special traffic considerations and scheduling.

1.03 SUBMITTALS

A. The Contractor shall submit to the Engineer for review and approval, in accordance with Section 01330, a Traffic Control Plan at the time of the pre-construction meeting. Traffic Control Plan shall be prepared by professional having a minimum of 5 years of professional experience in the design of temporary traffic controls. Contractor shall remain responsible for adequacy of the Traffic Control Plan, equipment, and personnel.

PART 2 - PRODUCTS

2.01 TRAFFIC CONTROL DEVICES

A. Signs, flags, and other warning and safety devices for maintaining traffic and detour purposes as indicated in Part 3 of this Section shall conform to the requirements set forth in the current Manual of Traffic Controls issued by the State of California Department of Transportation.

1. Warning signs used for nighttime conditions shall be reflectorized or illuminated. "Reflectorized signs" shall have a reflectorized background and shall conform to the current State of California Department of Transportation specification for reflective sheeting on highway signs.

2.02 BARRICADES

A. Barricades shall be constructed of lightweight commercial quality materials, as approved by the Engineer. Stay bracing for "A"-frame designs shall not be rigid.

B. Markings for barricade rails shall be alternate orange and white stripes. The entire area of orange and white stripes shall be Type-I, engineering grade, or Type-II, super engineering grade, retroreflective sheeting. The color of the orange retroreflective sheeting shall conform to PR No. 6, Highway Orange, of the Federal Highway Administration's Color Tolerance Chart. Retroreflective sheeting shall be placed on rail surfaces in such a manner that no air bubbles or voids are present between the rail surface and retroreflective sheeting. The predominate color for barricade components other than rails shall be white, except that unpainted galvanized metal or aluminum may be used.

C. Owner identification shall not be imprinted on the reflectorized face of any rail, but may be imprinted elsewhere.

D. Ballasting shall be by means of sand filled bags placed on the lower parts of the frame or stays, but shall not be placed on top of the barricade or over any reflectorized barricade rail face facing traffic.

E. If barricades are displaced or are not in an upright position, from any cause, the barricades shall immediately be replaced or restored to their original location, in an upright position, by the Contractor.

2.03 PORTABLE DELINEATORS

A. Portable delineators, including the base, shall be composed of a material that has sufficient rigidity to remain upright when unattended and shall be either flexible or collapsible upon impact by a vehicle. The base shall be of such shape as to preclude roll after impact. The base shall be of sufficient mass or shall be anchored in a manner such that the delineator shall remain in an upright position. Ballast, if used for the bases of portable delineators, shall be sand or water.

B. If the portable delineators are displaced or are not in an upright position, from any cause, the delineators shall immediately be replaced or restored to their original location, in an upright position, by the Contractor.

C. The vertical portion of the portable delineators shall be of a fluorescent orange or predominantly orange color. The posts shall be not less than 3 inches in width or diameter. The minimum height shall be 36 inches above the traveled way.

D. A minimum of 2 retroreflective bands, each not less than 3 inch wide, shall be mounted a minimum of 1 ½ inches apart and at a height on the post so that one retroreflective band will be between 2.5 feet and 3 feet above the roadway surface.

E. Retroreflective bands shall be white and shall be fabricated from flexible reflective sheeting as specified in the special provisions. The retroreflective bands shall be visible at 1,000 feet at night under illumination of legal high beam headlights, by persons with vision of or corrected to 20/20.

F. Only one type of portable delineator shall be used on the project. The type of portable delineator proposed for use on the project shall be submitted to the Engineer for approval prior to placement on the project.

2.04 CONSTRUCTION AREA SIGNS

A. The term "Construction Area Signs shall include all temporary signs required for the direction of public traffic through or around the work during construction. These signs are shown in or referred to in the current State of California Manual of Traffic Controls.

B. All construction area signs shall conform to the dimensions, color and legend requirements of the plans, the current Manual of Traffic Controls and these specifications. All sign panels shall be the product of a commercial sign manufacturer, and shall be as specified in these specifications.

C. Sign panels for all construction area signs shall be visible at 500 feet and legible at 300 feet, at noon on a cloudless day and at night under illumination of legal low beam headlights, by persons with vision of or corrected to 20/20, except that the nighttime requirement shall not apply to fabric sign panels for portable signs.

D. The Contractor may be required to cover certain signs during the progress of the work. Covers for construction area signs shall be of sufficient size and density to completely block out the message so that it is not visible either during the day or at night. Covers shall be fastened securely to prevent movement caused by wind action.

E. The Contractor shall clean all construction area sign panels at the time of installation and as often thereafter as the Engineer determines to be necessary, but at least once every 2 months.

F. Used signs with the specified sheeting material will be considered satisfactory if they conform to the requirements for visibility and legibility and the colors conform to the

requirements of the current Manual of Traffic Controls. A significant difference between day and nighttime retroreflective color will be grounds for rejecting signs.

G. To properly provide for changing traffic conditions and damage caused by public traffic or otherwise, the Contractor shall be prepared to furnish on short notice additional construction area sign panels, posts and mounting hardware or portable sign mounts. The Contractor shall maintain an inventory of the commonly required items at the jobsite or shall make arrangements with a supplier who is able, on a daily basis, to furnish the items on short notice.

2.05 CHANNELIZERS

A. Channelizer posts shall be orange in color.

B. Channelizers shall have affixed white retroreflective sheeting as specified in the special provisions. The retroreflective sheeting shall be 3 inches x 12 inches in size. The retroreflective sheeting shall be visible at 1000 feet at night under illumination of legal high beam headlights, by persons with vision of or corrected to 20/20.

C. The channelizer bases shall be cemented to the pavement with hot melt bituminous adhesive or rapid set epoxy adhesive. Channelizers shall be applied only on a clean, dry surface.

D. Channelizers shall be placed on the alignment and location as directed by the Engineer. The channelizers shall be placed uniformly, straight on tangent alignment and on a true arc on curved alignment. All layout work necessary to place the channelizers to the proper alignment shall be performed by the Contractor.

E. If the channelizers are displaced or fail to remain in an upright position, from any cause, the channelizers shall immediately be replaced or restored to their original location by the Contractor.

2.06 TEMPORARY RAILING (TYPE K)

Temporary railing (Type K) shall consist of interconnected new or undamaged used precast concrete barrier units as shown on the plans or as directed for use by the Engineer. Temporary railing (Type K) shall conform to the State of California Department of Transportation Specifications.

2.07 TRAFFIC CONES

A. Traffic cones shall be fluorescent and of good commercial quality, flexible material suitable for the purpose intended. The outer section of the portion above the base of the cone shall be translucent and be of a highly pigmented fluorescent orange polyvinyl compound. The overall height of the cone shall be at least 28 inches and the bottom inside diameter shall be not less than 10.5 inches. The base shall be of sufficient mass

and size or shall be anchored in a manner that the traffic cone will remain in an upright position.

B. During the hours of darkness traffic cones shall be affixed with retroreflective cone sleeves. The retroreflective sheeting of sleeves on the traffic cones shall be visible at 1000 feet at night under illumination of legal high beam headlights, by persons with vision of or corrected to 20/20.

C. Retroreflective cone sleeves shall conform to one of the following:

1. Removable flexible retroreflective cone sleeves shall be fabricated from the retroreflective sheeting specified in the special provisions, have a minimum height of 12.5 inches and shall be placed a maximum of 3 inches from the top of the cone. The sleeves shall not be in place during daylight hours;

2. Permanently affixed semitransparent retroreflective cone sleeves shall be fabricated from the semitransparent retroreflective sheeting specified in the special provisions, have a minimum height of 12.5 inches, and shall be placed a maximum of 3 inches from the top of the cone. Traffic cones with semitransparent retroreflective cone sleeves may be used during daylight hours; or

3. Permanently affixed double band retroreflective cone sleeves shall have 2 white retroreflective bands. The top band shall be 6 inches in height, placed a maximum of 4 inches from the top of the cone. The lower band shall be 4 inches in height, placed 2 inches below the bottom of the top band. Traffic cones with double band retroreflective cone sleeves may be used during daylight hours.

D. The type of retroreflective cone sleeve used shall be at the option of the Contractor. Only one type of retroreflective cone sleeve shall be used on the project.

2.08 PORTABLE CHANGEABLE MESSAGE SIGNS

A. The message displayed on the sign shall be visible from a distance of 1,500 feet and shall be legible from a distance of 875 feet, at noon on a cloudless day, by persons with vision of or corrected to 20/20. The sign panel shall be 3-line matrix and shall display not less than 7 characters per line. Sign messages to be displayed shall be as approved by the Engineer.

B. The sign face shall be flat black and shall be protected from glare of the sun by a method which does not interfere with the clarity of the sign message. The sign shall be raised and lowered by means of a power driven lifting mechanism.

C. The matrix sign shall be capable of complete alphanumeric selection.

D. Lamp matrix type signs shall be equipped with an automatic dimming operational mode that automatically compensates for the influence of a temporary light source or other abnormal lighting conditions. The sign shall have manual dimming operation modes of 3 or more different lamp intensities.

E. Matrix signs not utilizing lamps shall be either internally or externally illuminated at night.

F. The controller shall be an all solid-state unit containing all the necessary circuitry for the storage of at least 5 preprogrammed messages. The controller shall be installed in a location allowing the operator to perform all functions from one position. A keyboard entry system shall be provided to allow an operator to generate an infinite number of additional messages over the preprogrammed stored messages. The keyboard shall be equipped with a security lockout feature to prevent unauthorized use of the controller.

G. The controller shall contain a nonvolatile memory to hold the keyboard created messages in memory during periods when the power is not activated. The controller shall provide for a variable message display rate, which allows the operator to match the information display to the speed of the approaching traffic. The flashing off time shall be operator adjustable within the control cabinet.

H. Full operation height shall be with the bottom of the sign at least 7 feet above the ground and the top no more than 14.5 feet above the ground.

I. After initial placement, portable changeable message signs shall be moved from location to location as directed by the Engineer.

J. Portable changeable message signs shall be furnished, placed, operated, and maintained at locations shown on the Traffic Control Plan, specified in the special provisions, or designated by the Engineer.

2.09 FLASHING ARROW SIGNS

A. Flashing arrow signs shall be finished with commercial quality flat black enamel and shall be equipped with yellow or amber lamps that form arrows or arrowheads as required. Each lamp shall be provided with a visor and the lamps shall be controlled by an electronic circuit that will provide between 30 and 45 complete operating cycles per minute in each of the displays and modes specified. The control shall include provisions for dimming the lamps by reducing the voltage to 50 percent, ±5 percent, for nighttime use. Type I signs shall have both manual and automatic photoelectric dimming controls. Dimming in both modes shall be continuously variable over the entire dimming range.

B. Flashing arrow signs shall conform to the following legibility requirements. The minimum legibility distance is the distance at which flashing arrow signs shall be legible at noon on a cloudless day and at night by persons with vision of or corrected to 20/20.

Type	Min. Size	Min. Number of Panel Lights	Min. Legibility Distance
I	48” x 96”	15	1 Mile
II	24” x 48”	13	¾ Miles

C. Flashing arrow signs shall be capable of being operated in 4 different display modes as follows. The display to be used shall be as directed by the Engineer:

1. Pass Left Display
2. Pass Right Display
3. Simultaneous Display
4. Caution Display

D. Flashing arrow signs shall also be capable of operating in one or both of the following modes, at the option of the Contractor:

1. Flashing Arrow Mode
2. Sequential Mode

E. In the flashing arrow mode, all lamps forming the arrowhead and shaft shall flash on and off simultaneously.

F. In the sequential mode, either arrowheads or arrows shall flash sequentially in the direction indicated.

G. In the simultaneous display mode, the lamps forming both right and left arrowheads and the lamps of the arrowshaft (center 3 on Type I signs) shall flash simultaneously. On Type II signs, the lamps forming the right and left arrowhead, except the center lamp, may be continuously illuminated while the lamps forming the shaft and the center lamp of the arrowheads flash on and off simultaneously.

H. In the caution display mode, a combination of lamps not resembling any other display or mode shall flash.

I. Each flashing arrow sign shall be mounted on a truck or on a trailer and shall be capable of operating while the vehicle is moving and shall be capable of being placed and maintained in operation at locations as specified in the special provisions or as directed by the Engineer.

J. Flashing arrow signs shall be mounted to provide a minimum of 7 feet between the bottom of the sign and the roadway.

K. Trailers on which flashing arrow signs are mounted shall be equipped so that they can be leveled and plumbed.

L. Electrical energy to operate the sign shall be obtained from the vehicle on which the sign is mounted or from a generating plant mounted on the vehicle. Regardless of the source, the supply of electrical energy shall be capable of operating the sign in the manner specified.

PART 3 - EXECUTION

3.01 GENERAL

A. The Contractor shall conduct operations as to offer the least possible obstruction and inconvenience to the public and shall have under construction no greater length or amount of work than can be prosecuted properly with due regard to the rights of the public.

B. In order to expedite the passage of public traffic through or around the work and where ordered by the Engineer, the Contractor shall install signs, lights, flares, temporary railing (Type K), barricades and other facilities for the sole convenience and direction of public traffic. The Contractor shall furnish competent flaggers whose sole duties shall consist of directing the movement of public traffic through or around the work.

C. Convenient access to driveways and buildings in the vicinity of work shall be maintained as much as possible. Temporary approaches to, and crossing of, intersecting traffic lanes shall be provided and kept in good condition.

D. When leaving a work area and entering a roadway carrying public traffic, the Contractor's equipment, whether empty or loaded, shall in all cases yield to public traffic.

E. The Contractor shall identify an individual who will be available 24 hours per day with the responsibility and authority to respond to emergencies related to traffic control. Contractor shall report the name and telephone number of the individual to the Engineer prior to the start of work.

F. The Contractor shall place temporary advance warning signs to alert motorists to construction work ahead whenever trucks or construction equipment are entering or leaving the construction site or when equipment is in the road right-of-way.

G. The Contractor shall post and maintain advance notification by placing signs, mailers, and door hangers in advance of construction, at least 7 calendar days prior to the scheduled start of work. The notice shall include the name and telephone of Owner (obtain this information from Engineer) and Contractor, a description of the delay and the dates(s) of construction that will obstruct a property owner’s access.

H. The Contractor shall reasonably accommodate a property owner's requests to cross the work zone to enter or leave their property. The Contractor shall notify the Engineer and property owner at least 5 days in advance if there is a possibility the work may block an owner's pedestrian access for more than 30 minutes.

I. "No Parking" signs shall be posted at least seventy-two (72) hours in advance of any parking restriction, as necessary in accordance with City of Citrus Heights and County of Sacramento regulations.

3.02 PUBLIC SAFETY

A. It is the Contractor's responsibility to provide for the safety of traffic and the public during construction.

B. Whenever the Contractor's operations create a condition hazardous to traffic or to the public, the Contractor shall furnish, erect and maintain those fences, temporary railing (Type K), barricades, lights, signs and other devices and take such other protective measures that are necessary to prevent accidents and provide a safe passage to the public.

C. The Contractor shall furnish such flaggers as are necessary to give adequate warning to traffic or to the public of any dangerous conditions to be encountered.

D. Signs or other protective devices furnished and erected by the Contractor shall not obscure the visibility of, nor conflict in intent, meaning and function of existing signs, lights and traffic control devices or any construction area signs and traffic control devices. Signs furnished and erected by the Contractor, shall be approved by the Engineer as to size, wording and location.

E. All movements of workmen and construction equipment on or across lanes open to public traffic shall be performed in a manner that will not endanger public traffic.

F. No material or equipment shall be stored where it will interfere with the free and safe passage of public traffic, and at the end of each day's work and at other times when construction operations are suspended for any reason, the Contractor shall remove all equipment and other obstructions from that portion of the roadway open for use by public traffic and from the public right of way. Contractor is required to park or store its equipment at a safe distance from the edge of traveled way during its daily construction operations. If Contractor can not accommodate its equipment within a safe distance from the edge of traveled way he should immediately remove them and place them in a safe area away from the traffic.

G. Should the Contractor appear to be neglectful or negligent in furnishing warning devices and taking protective measures as above provided, the Engineer may direct attention to the existence of a hazard and the necessary warning devices shall be furnished and installed and protective measures taken by the Contractor. Should the Engineer point out

the inadequacy of warning devices and protective measures, that action on the part of the Engineer shall not relieve the Contractor from responsibility for public safety or abrogate the obligation to furnish and pay for these devices and measures.

3.03 FLAGGING

A. The Contractor shall provide flaggers to control traffic where necessary.

1. Flaggers shall perform their duties and shall be provided with the necessary equipment in accordance with the current "Instructions to Flaggers" of the State of California Department of Transportation.

2. Flaggers shall be employed full time on traffic control and shall have no other duties.

3.04 WORK HOURS

Work hours are listed in Section 01100, Project Summary.

3.05 TRAFFIC SIGNALS

At signalized intersections, caution should be taken to avoid damaging detector loops, conduit and conductors. If loops, conduits and conductors are damaged, a qualified electrical contractor specializing in traffic signal work shall do the permanent repair work to conduits and conductors. The work shall be finished within 14 calendar days from the time the damage occurs.

3.06 REPLACEMENT OF EXISTING SIGNING AND STRIPING

The Contractor shall replace in-kind all existing roadway signing and pavement striping damaged by construction operations.

PART 4 - MEASUREMENT AND PAYMENT

No separate payment will be made for work in this Section. Payment for work in this Section shall be included as part of the applicable Lump Sum or Unit Prices stated in other Sections.

-END OF SECTION-

SECTION 01575 – TEMPORARY EROSION CONTROL

1.01 GENERAL

A. Temporary erosion control shall consist of, but not be limited to, constructing such facilities and taking such measures as are necessary to prevent, control, and abate water, mud, construction materials, hazardous materials and erosion damage to public and private property as a result of the Contractor's operations.

B. Conformance with the requirements of this section shall in no way relieve the Contractor from the Contractor's responsibilities, as provided in Section 7-1.01G, "Water Pollution," Section 7-1.11, "Preservation of Property," of the Caltrans Standard Specifications.

C. Contractor shall employ applicable best management practices to perform all work under the project contract in a safe and efficient manner and which protects the environment. The best management practices shall not be limited to the requirements set forth in this Section.

D. Construction vehicles and equipment entering existing paved areas shall be free of mud, silt and other debris during all phases of work. No mud, silt and other debris shall be tracked on paved surfaces. If such materials are tracked on the streets or other paved areas both public and private, the Contractor shall immediately remove these materials prior to these materials entering into the storm drain system.

E. The Contractor shall install wire-backed, silt fencing and straw bale barriers along channel boundary as directed by the Engineer. The Contractor shall maintain and repair the silt fences and straw bales including cleanup and disposal of sediments, when directed by the Engineer. Repairs as required and sediment cleanup and disposal will be at no additional cost to the Owner. The silt fences and straw bales shall be removed and properly disposed of by the Contractor upon completion of construction. All existing drainage ditches and culverts shall be reopened and graded and natural drainage restored. Restore culverts broken or damaged to their original condition and location.

F. Stockpiling of materials on the street will not be allowed unless otherwise approved by the Engineer. The Contractor shall cover with plastic any construction or excavated materials between November 15th and March 15th which may possibly erode and enter the storm drain system of paved streets or other paved areas both public and private.

G. The Contractor shall sweep the work area and clean up the work site daily before leaving the site. Hosing down the street is not allowed.

H. By November 15th of each year the temporary erosion control features as are necessary to prevent damage during forthcoming rainy season shall be constructed and functioning. If the earthwork in any area has not progressed to a point where any part of the facilities on the temporary erosion control plans for that area can be constructed, the Contractor shall construct such supplementary temporary erosion control facilities as are necessary to protect adjacent private and public property.

Temporary erosion control measures shall include, but not be limited to, the following:

1. The Contractor shall conduct operations in such a manner that storm runoff will be contained within the site or channeled into the storm drain system which serves the runoff area. Storm runoff from one area shall not be allowed to divert to another runoff area.

2. Storm drain systems, toe of slope drains, and outlet structures shall be constructed and operating prior to commencing, or concurrently with placing an embankment. Temporary downdrains, drainage structures, and other devices shall be provided to channel storm runoff water into the respective permanent storm drain systems during construction. Mud and silt shall be settled out of the storm runoff before the runoff enters the storm drain system.

3. Embankment areas, while being brought up to grade and during periods of completion prior to final roadbed construction, shall be protected by various measures to eliminate erosion and the siltation of downstream facilities and adjacent areas. These measures may include, but shall not be limited to: temporary downdrains, either in the form of pipes or paved ditches with protected outfall areas; graded berms around areas to eliminate erosion of embankment slopes by surface runoff; confined ponding areas to de-silt runoff; and temporary check dams in toe of slope ditches to de-silt runoff.

4. Excavation areas, while being brought to grade, shall be protected from erosion and the resulting siltation of downstream facilities and adjacent areas by use of various temporary erosion control measures. These measures may include, but shall not be limited to: check dams; confined ponding areas to de-silt the runoff; and protection, such as sandbags around inlets which have not been brought up to grade.

5. Contour graded areas shall be protected against erosion and the resulting siltation of downstream facilities and adjacent areas during grading operations. Various measures may include, but shall not be limited to: the use of graded contour berms to control sheet flow; supplemental grading of large areas around temporary or unfinished inlet structures to provide de-silting basins; and temporary ditch paving.

6. From November 15th to March 15th:

A. During embankment construction, an earth berm or appropriate grading to direct drainage away from the edge of the top of the embankment shall be constructed and maintained on those embankments where earthwork operations are not in progress.

B. Special attention will be required to protect areas, which have been cleared, and grubbed prior to excavation or embankment operations, and which are subject to runoff during the period from November 15th to March 15th. Temporary measures may include, but shall not be limited to: temporary de-silting basins; contour graded ditches; temporary paved and unpaved ditches; and filter fabric fences to contain silt and sediment from runoff.

C. After each storm, de-silting basins shall be checked against their design capacity and if necessary, silt and sediment shall be removed to restore capacity.

1.02 INSPECTION AND MAINTENANCE

A. To ensure the proper implementation and functioning of temporary erosion control measures, the Contractor shall regularly inspect and maintain the construction site for the control measures identified above. The Contractor shall identify corrective actions and time frames to address any damaged measures or reinitiate any measures that have been discontinued.

B. During the rainy season defined as between November 15th to March 15th, inspections of the construction site shall be conducted by the Contractor to identify deficient measures, as follows:

1. Prior to a predicted storm;

2. After all precipitation which causes runoff capable of carrying sediment from the construction site;

3. At 24 hours intervals during extended precipitation events; and

4. Routinely, on a minimum twice monthly basis.

If the Contractor identifies a deficiency in the deployment or functioning of an identified control measure, the deficiency shall be corrected in a timely manner. If the Engineer identifies a deficiency in the deployment or functioning of an identified control measure, the Contractor will be notified in writing and the deficiencies shall be corrected by the Contractor in a timely manner.

PART 2 – MATERIALS (Not Used)

PART 3 – EXECUTION (Not Used)

PART 4 – MEASUREMENT AND PAYMENT

No separate payment will be made for Temporary Erosion Control. Payment for work in this Section shall be included as part of the applicable Lump Sum or Unit Prices stated in other Sections.

-END OF SECTION-

SECTION 01740 - PRESERVATION AND CLEANUP

Bid Item No. 3

PART 1 - GENERAL

1.01 SCOPE
This Section covers the preservation and the cleanup of the project site, complete.

PART 2 - MATERIALS (Not used)

PART 3 - EXECUTION

3.01 PRESERVATION AND CLEANUP
The Contractor shall protect all existing utilities, fences, and any other facilities. Any damaged or destroyed facilities shall be replaced to a condition equal to or better than the condition prior to the damage. All repairs to damaged facilities shall receive the approval of the Engineer or authorized representative of the utility owner.

Stockpile excavated materials in a manner that will cause the least damage to adjacent property, trees, shrubbery, or fences, regardless of whether these are on private property, or on City, County, or State rights-of-way. At all times during the work, keep the premises clean and orderly, and upon completion of the work, repair all damage caused by equipment and leave the project free of rubbish or excess materials of any kind and in a condition equivalent to the original condition.

Contractor shall keep all paved roads clean and free of dust, mud, and debris resulting from the Contractor's operations. If mud or debris is tracked to any paved street the Contractor shall promptly utilize what ever means are necessary to return the pavement to a clean condition.

3.02 EXISTING TREES AND SHRUBS
The Contractor shall take all necessary precautions to not damage or remove any of the existing tress or shrubs on adjacent properties. The Contractor shall immediately notify the Engineer if any tree or shrub is damaged by the Contractor's operation.

Damaged trees or shrubs shall be replaced if in the opinion of the Engineer such replacement is necessary. The trees or shrubs shall be of like size and variety. The minimum size of any replacement tree shall not be less than 1-inch in diameter nor less than 6 feet high.

3.03 EROSION AND SEDIMENT CONTROL
The Contractor shall exercise care and diligence to limit damage caused by erosion and sediment loosened by the Contractor's operation and shall take all precautions necessary to sustain adjacent properties as shown on the Drawings.

The Contractor shall maintain and repair all erosion protection devices as needed and when directed by the Engineer. Repairs, sediment cleanup, and disposal will be at no additional cost to the Owner. The erosion protection devices shall be removed and properly disposed of by the Contractor upon completion of construction. See Section 01575 – TEMPORARY EROSION CONTROL for additional requirements.

3.04 PAVEMENT RESTORATION

All paved areas that are damaged during construction shall be replaced with similar materials of equal thickness to match existing undamaged adjacent areas, including the base and subbase. Pavements that are to be partially removed shall be neatly saw cut in straight lines to provide a clean, sound, vertical joint.

3.05 SITE RESTORATION

Upon completion of the project, all areas used by the Contractor shall be properly cleared of all temporary structures, rubbish, and waste materials and properly graded to drain and blend with the abutting properties. Final payment shall be withheld pending clean-up and restoration.

PART 4 - MEASUREMENT AND PAYMENT

All work as specified herein, satisfactorily completed, shall be paid for on a Lump Sum basis stated in the **Bid Item Schedule** for the item listed below and shall be no more than one percent (1%) of the Bid Total.

Bid Item No. 3 – PRESERVATION AND CLEANUP

-END OF SECTION-

SECTION 01750 – PROJECT CLOSEOUT

Bid Item No. 4

PART 1 - GENERAL

1.01 SCOPE
This Section covers the work necessary to closeout the project, complete.

1.02 FINAL CLEANUP
The Contractor shall cleanup the project site as indicated in Section 01740 – PRESERVATION AND CLEANUP, and this specification. The Contractor shall remove all rubbish, unused materials, concrete forms, construction equipment, temporary structures and facilities used during construction. The site shall be cleaned, graded and returned to a condition equivalent to the original condition.

1.03 FINAL SUBMITTALS
The Contractor shall submit the following items to the Engineer upon substantial completion of the project, for review: Final payment will be withheld until all items are submitted and approved by the Engineer.

A. Manufacturers' and suppliers' written, instructions, warranties and guarantees.

B. Technical and Operation and Maintenance manuals.

C. As-built drawings.

D. New permanent cylinders and key blanks for all locks.

E. Parts list, spare parts, and any special tools.

F. Bonds for maintenance, as required.

1.04 GUARANTEE AND WARRANTIES
The Contractor shall comply with the guarantee and warranty requirements contained herein and in other sections of these Specifications and in the applicable sections of the General Conditions.

The Contractor shall guarantee the entire project, including but not limited to the chemical feed equipment, miscellaneous piping, valves, and process control instrumentation, pump station, transmission piping, paving, fencing, and all appurtenances for a period of one (1) year from the final written acceptance of the work by the District. If any materials or workmanship prove to be defective within one (1) year of said final acceptance, they shall be replaced or repaired by the Contractor at no cost to the Owner.

PART 2 – MATERIALS (Not Used)

PART 3 – EXECUTION (Not Used)

PART 4 - MEASUREMENT AND PAYMENT

All work as specified herein, satisfactorily completed, shall be paid for on a Lump Sum basis stated in the **Bid Item Schedule** for the item listed below and shall not be more than one percent (1%) of the Bid Total.

Bid Item No. 4 – PROJECT CLOSEOUT

-END OF SECTION-

SECTION 02200 – CLEARING AND GRUBBING

Bid Item No. 5

PART 1 - GENERAL

1.01 SCOPE
This Section covers the work necessary to clear and grub the project site, complete.

1.02 SITE CONDITIONS
The Contractor shall conduct site visits as needed to determine the extent of the work. Work will also include the removal of trees, as shown on the drawings.

PART 2 - MATERIALS (Not used)

PART 3 - EXECUTION

3.01 CLEARING AND GRUBBING
Where clearing or partial clearing of the site is necessary, complete prior to the start of construction of facilities or structures. Cut trees and brush as near to the surface of the ground as practicable, remove all stumps, and pile for disposal. Do not permit excavated materials to cover brush or trees prior to disposal.

Do not remove existing trees or tree limbs over two (2) inches in diameter whether on public or private property unless they are within four (4) feet of the pipe centerline, or pump station building without permission from the Engineer.

Protect from damage, unless otherwise marked by the Engineer, all trees, shrubs, or plants within the limits of the easement on private or public property. Ornamental and exotic trees and shrubs that interfere with trenching shall be replaced in kind and size or may be removed intact with their root system. Ball the root system of the trees, shrubs, or plants, bind in burlap, heel into topsoil, and keep watered as required. Upon completion of the pipe laying and backfilling of the trench, replant the trees, shrubs, or plants in their original position. The Contractor shall record the location of any plant prior to its removal. Should any tree, shrub, or plant that has been disturbed as a result of its removal, or otherwise damaged by the Contractor, die within one (1) year after the final acceptance of the project, it shall be replaced in kind and size by the Contractor at the Contractor's expense.

The Contractor shall remove all unknown underground structures or debris that may be encountered within the limits of construction.

3.02 DISPOSAL
The Contractor shall bear all costs of disposing of trees, stumps, brush, roots, limbs, and other waste materials from the clearing and grubbing operation. Debris shall be disposed of in such a

manner as to meet all requirements of State, County, and local regulations regarding health, safety, and public welfare, and shall be properly disposed of off site. Burning of debris is not permissible and shall not be allowed.

PART 4 - MEASUREMENT AND PAYMENT

Clearing and Grubbing shall be paid for on a Lump Sum basis as stated in the **Bid Item Schedule** for the item listed below and shall be no more than one percent (1%) of the Bid Total.

Bid Item No. 5 – CLEARING & GRUBBING

-END OF SECTION-

SECTION 02300 - EARTHWORK

Bid Item No. 6

PART 1 - GENERAL

1.01 SCOPE

This Section covers earthwork, including preparation of subgrades, construction of fills and embankments, placement of riprap, subgrade preparation for roadways, surfacing and grading, disposal of excess materials, all necessary sheeting, shoring, and bracing work, and other appurtenant work, complete. See Section 02320-TRENCH EXCAVATION AND BACKFILL for additional requirements. Contractor shall provide to the Engineer, prior to any excavation, evidence of Underground Service Alert (USA) notification and completion of inspection for the entire project.

1.02 DEFINITIONS

A. Relative Compaction (ASTM Method)

The ratio, expressed as a percentage, of the dry density of the backfill material as compacted in the field, to the maximum dry density of the same material determined in the laboratory by ASTM D1557.

B. Optimum Moisture Content (ASTM Method)

The ratio, expressed as a percentage, of the weight of water in the solid material to the weight of the solids which occurs at the maximum dry density as determined by ASTM D1557.

C. Optimum Moisture Content (CalTrans Method)

The ratio, expressed as a percentage, of the weight of the water in the soil material to the weight of the solids, which occurs at the maximum wet density as determined by CalTrans Test Method 219.

D. Well-Graded

Well-graded as used in this section defines a mixture of particle sizes that have no specific concentration or lack thereof of one or more sizes. Well-graded does not define any numerical value that must be placed on the coefficient of uniformity or any other specific grain size distribution parameters. Well-graded is used to help define a material type that, when compacted, produces a strong and relatively incompressible soil mass free from detrimental voids.

1.03 SUBMITTALS

Samples of imported fill materials to be used shall be submitted two (2) weeks in advance of use. Samples shall consist of 0.5 cubic feet of each type of material.

Filter fabric data submitted shall include:

1. A 12-inch square of fabric

2. Manufacturer's descriptive product data

3. Installation instructions

PART 2 - MATERIALS

2.01 NATIVE SOILS

Native soil, where permitted, shall be unclassified material which is free from peat, wood, roots, bark, debris, garbage, rubbish or other extraneous material. The native soil shall contain no material greater than 4 inches in size, including clods. Moisture conditioning of native materials (i.e., drying of wet soils and wetting of dry soils) may be required to achieve specified compaction and shall be done at no additional expense to the Owner.

2.02 IMPORTED FILL SOILS

Imported fill soils shall have the following properties:

1. All fill particles shall be less than 3 inches in size.

2. Less than 30 percent of the material shall be retained on the 3/4-inch sieve.

3. No less than 15 percent and no more than 30 percent of the material shall pass the No. 200 sieve.

4. The fill material shall have a plasticity index (PI) no greater than 15.

5. The fill material shall contain less than 2 percent by weight of organics and shall be free of other objectionable material (concrete, plastic, metal and other wastes).

2.03 IMPORTED TOPSOIL

Imported topsoil for topsoil replacement shall be suitable sandy loam from an approved source, which possesses friability and a high degree of fertility. It shall be free of clods, roots, gravel, and other foreign material. It shall be free of noxious vegetation and seed. Imported topsoil required shall be obtained and transported at the Contractor's expense.

2.04 STRUCTURAL BACKFILL

Structural backfill shall conform to Section 19-3.06 of the CalTrans Standard Specifications.

2.05 STABILIZATION MATERIAL

Stabilization material shall be 3-inch minus crushed rock, well graded from course to fine, containing less than 25 percent by weight particles passing the No. 200 sieve, and free from clay lumps, consolidated masses and organic material.

2.06 AGGREGATE BASE

Aggregate base shall be Class 2 and shall conform to the 3/4-inch maximum grading provisions in Section 26 of the CalTrans Standard Specifications.

2.07 CRUSHED ROCK

Crushed rock shall consist of durable rock and gravel that is free of deleterious material and free of slaking or decomposition under the action of wetting and drying. The durability index shall be 40 or greater. Crushed rock shall conform to the following graduation:

Sieve Size	Percent Passing by Weight
1 inch	100
3/4 inch	90-100
No. 4	0-10
No. 200	0-2

2.08 PEA GRAVEL

Pea gravel shall not be used.

2.09 RIPRAP

Riprap shall conform to CalTrans Standard Specifications Section 72 and shall be clean, hard, durable tailings, quarry, or crushed rock. Rock taken from the excavation may be used for riprap if it conforms to these requirements. Bulk density shall not be less than 160 pounds per dry cubic foot. The least dimension of any one piece shall not be less than 1/3 the greatest dimension. A minimum of 50 percent of the volume shall be in pieces ranging in size of 1 cubic foot to 2 cubic feet. Smaller pieces will be allowed only to fill in the voids in the larger stone.

2.10 BEDDING SAND

Bedding sand shall be #2 washed sand that is clean, non-plastic and free from deleterious or foreign matter. The sand shall be of such size that 90 percent to 100 percent will pass a No. 4 sieve and no more than 5 percent will pass a No. 200 sieve.

2.11 FILTER FABRIC

Filter fabric shall be a non-woven material consisting of polyester, nylon, polypropylene filaments formed into a stable network. The fabric shall be permeable, not act as a wicking agent, be inert to

commonly encountered chemicals, be rot-proof, and resistant to ultraviolet light. The filter fabric shall be Mirafi 160 EX, or equal.

2.12 ANCHOR PINS

Anchor pins shall be of steel, a minimum of 3/16 inch in diameter, and at least 15 inches in length, or equivalent pins recommended by the manufacturer of the filter fabric.

PART 3 - EXECUTION

3.01 GENERAL

1. **Stabilization**
   Where the undisturbed condition of natural soils is inadequate for support of the planned construction, the Engineer will direct the Contractor to over-excavate to adequate supporting soils. The excavated space shall be filled to the specified elevation with stabilization material wrapped with filter fabric. Place stabilization material in maximum 8-inch loose layers and compact to a minimum of 95 percent relative compaction.

2. **Surplus Material**
   Unless otherwise specified, surplus excavated material shall be disposed of off site in accordance with applicable ordinances, environmental requirements, and in accordance with CalTrans Standard Specification Section 7-1.13.

3. **Hauling**
   When hauling is done over highways or city/county streets, the loads shall be trimmed and the vehicle shelf areas shall be cleaned after each loading. The loads shall be watered after trimming to eliminate dust, tarped, and transported pursuant to local requirements.

4. **Erosion Control**
   The Contractor shall maintain earthwork surfaces true and smooth and protected from erosion. Where erosion occurs, the Contractor shall provide fill or shall excavate as necessary to return earthwork surfaces to the grade and finish specified.

5. **Control of Water**
   When water is encountered, the Contractor shall furnish, install, maintain and operate all necessary machinery, appliances and equipment to keep the excavation reasonably free from water until the placing of the bedding material, laying and jointing of pipe and fittings, pouring of concrete, and placing of the initial backfill has been completed, inspected and approved, and all danger of flotation and other damage is removed. Ground water pumped from the trench shall be disposed of in such a manner as to not cause injury to public or private property or constitute a nuisance or menace to the public

or waterways, and the disposal method shall be subject to the approval of the Engineer.

Surface water shall be diverted or otherwise prevented from entering excavations to the greatest extent possible without causing damage to adjacent property.

The Contractor shall be responsible for the condition of any pipe or conduit which he may use for drainage purposes, and all such pipe or conduit shall be left clean and free of sediment.

6. Finish Grading

Finished surfaces shall be smooth, compacted and free from irregularities. The degree of finish shall be that normally obtainable with a blade-grader.

Finished grade shall be as specified in the Drawings plus or minus 0.10 foot except where a local change in elevation is required to match sidewalks, curbs, manholes and catch basins, or to ensure proper drainage. Allowance for topsoil and grass cover, and subbase and pavement thickness shall be made so that the specified thickness of topsoil or pavement can be applied to attain the finished grade.

When the work is an intermediate stage of completion, the lines and grades shall be as specified plus or minus 0.5 foot to provide adequate drainage.

If the soil is to be cultivated or straw is to be incorporated into the surface, rocks larger than 2-1/2 inches in maximum dimension, roots and other debris on the surface of the slope shall be removed and disposed of prior to cultivation or placement of straw.

7. Classification of Excavated Materials

No classification of excavated materials will be made. Excavation and trenching work shall include the removal and subsequent handling of all materials excavated or otherwise removed in performance of the work, regardless of the type, character, composition, or condition thereof.

3.02 AREA FILL AND EMBANKMENTS

Area fill is defined as backfill for all areas not covered under trench backfill, structural backfill, or roadway backfill. Strip and dispose of all organic sod, topsoil, grass, grass roots, debris, and other objectionable material from areas to receive fill material. The exact depth of stripping will be determined by the Engineer. Following stripping, proof roll the areas to receive fill to a firm and unyielding condition as accepted by the Engineer. Once site preparation is complete, place fill to the lines and grades shown on the Drawings.

Fill shall be moisture-conditioned to within 0 and +3 percent of optimum moisture content. The fill shall be placed in horizontal lifts that do not exceed 8 inches in thickness prior to compaction. The fill shall be compacted with suitable equipment to not less than 90 percent relative compaction when

used for cultivated areas, to backfill walls of buried structures, and for other areas as designated in the Drawings. Fill shall be compacted to not less than 95 percent relative compaction when used for roadways, drives, parking areas, and beneath structural backfill.

3.03 ROADWAY SUBGRADE

Subgrades for roadways shall conform to CalTrans Standard Specifications, Section 19-2 and these specifications. Subgrades shall be constructed to the lines and grades as shown on the Drawings. The surface of the subgrade at any point shall not vary more than 0.05 foot above or 0.10 foot below the planned grade at any point.

1. **Roadway Backfill**
   Prior to backfilling, the subgrade surface shall be bladed or trimmed to the proper grade and rolled to a reasonably smooth surface. Material to be used for backfill shall be as specified on the Drawings. After satisfactory grading and compaction of all backfills in areas to be paved, subgrade soils shall be moisture conditioned to achieve optimum moisture content. The upper 6 inches of subgrade soils shall then be uniformly compacted to a minimum of 95 percent relative compaction. After compaction, and shaping to line, grade, and cross section, the subgrade shall be sprinkled regularly to moisten the surface and to prevent it from drying out and/or cracking prior to the placement of aggregate base.

2. **Roadway Excavation**
   Excavation for roadways, drives, and parking areas shall include the excavation of all unsuitable material from the subgrade. After shaping to line, grade, and cross section, the subgrade shall be compacted to a depth of at least 6 inches to 95 percent relative compaction. This operation shall include any reshaping and wetting or drying required to obtain proper compaction. All soft or otherwise unsuitable material shall be removed and replaced with suitable material.

3.04 STRUCTURAL BACKFILL

Structural fill shall be constructed to the lines and grades as shown in the Drawings, and shall conform to CalTrans Standard Specifications Section 19-3.06.

1. **Limits**
   Structural backfill is defined as backfill within 5 feet of the face of structures. Excavated areas outside of the 5-foot limit shall be backfilled as area fill. Trench backfill within 15 feet of structures located in roadways and cultivated areas shall also be defined as structural backfill.

2. **Preparations for Placing Backfill**
   Backfill around concrete structures only after the concrete has attained the specified compressive strength indicated in Section 03300 - CONCRETE. Remove all form materials and trash from the excavation before placing any backfill. Obtain the

Engineer's approval of concrete work and attained strength prior to backfilling.

Do not operate earth-moving or compaction equipment weighing over 1,200 pounds within 5 feet of walls of concrete structures for the purpose of depositing or compacting backfill material, except as approved. Compact backfill adjacent to concrete walls with hand-operated tampers or other approved equipment that will not damage the structure.

3. **Backfill Around Structures**
   Place structural backfill around structures. Do not exceed loose lifts of 8 inches. Compact each lift to at least 95 percent relative compaction. Stop structural backfill 6 inches below finished grade in all areas where topsoil is to be placed. Place material in a manner which avoids segregation.

   Any subsequent damage to slabs, piping, concrete structures, facilities, or structures caused by settlement of structural backfill shall be corrected and repaired by the Contractor at no cost to the Owner.

3.05 REMOVAL AND REPLACEMENT OF TOPSOIL

Where excavation crosses lawns, garden areas, pasture lands, cultivated fields, orchards, or other areas on which reasonable topsoil conditions exist, remove the topsoil for a minimum depth of 15 inches for the full width of the excavation. Stockpile this topsoil to one side of the right-of-way and do not mix with the remaining excavated material. Replace the topsoil in the top 12 inches in the backfilled excavation.

In lieu of stockpiling and replacing the topsoil, imported topsoil may be substituted in the top 12 inches at no additional cost to the Owner.

Maintain the finished grade of the topsoil level with the area adjacent to the excavation or mounded until final acceptance by the Engineer. Repair damage to adjacent topsoil caused by work operations. Remove all rock, gravel, clay, and any other foreign materials from the surface, re-grade, and add topsoil as required.

3.06 FILTER FABRIC

1. **Preparation of Subgrade**
   The surface to be lined with filter fabric shall be graded to obtain smooth side and bottom surfaces so that the cloth will not bridge cavities in the soil or be damaged by projecting rock. Filter fabric should be placed between native soil and fill material.

2. **Installation of Filter Fabric**
   The filter fabric shall be laid flat, but not stretched on the soil, and shall be secured with anchor pins spaced not more than 10 feet on centers. Overlaps shall be a minimum of 18 inches wide. The filter fabric shall be held in place with anchor pins at the overlaps and

corners to maintain the position of the fabric during placement of fill material.

3. **Protection From Exposure To Sun**
   Prior to and during installation, the filter fabric may be exposed to sunlight not more than 20 days.

4. **Inspection**
   All filter fabric installations shall be inspected and approved by the Engineer before backfilling. If any defective or damaged areas are found, the fabric shall be removed and replaced with new fabric or the damaged area may be repaired at the Contractor's option by covering damaged area with new fabric.

3.07 CRUSHED ROCK

Place crushed rock at air and vacuum release valves, drain valves, and other locations as shown on the Drawings. Crushed rock material shall be compacted to 90 percent relative compaction.

3.08 RIPRAP

Place riprap carefully to avoid disturbing the previously placed filter fabric. Average depth of riprap shall be not less than shown on the Drawings. Intermix the sizes of riprap materials to provide uniform gradation between small and large material.

3.09 COMPACTION TESTING

The Contractor shall make all necessary excavations for compaction tests. Costs of excavation, backfilling, and compacting in connection with compaction testing shall be borne by the Contractor. Initial testing will be paid for by the Owner. Re-testing due to failure will be paid for by the Owner and deducted from sums due the Contractor.

Field tests of compacted density will be in accordance with CalTrans 216 (sand cone) or 231 (nuclear gage) at the Engineer's option.

3.10 SHORING, SHEETING AND BRACING

Except where banks are cut back on a stable slope if approved and as directed by the Engineer, excavations for structures and trenches shall be supported as necessary to prevent caving or sliding.

Sheet and brace the excavation when necessary for safety to prevent caving during excavation in unstable material, or to protect adjacent structures, property, workers, and the public. Increase trench widths accordingly by the thickness of the sheeting, shoring, or trench box. Maintain shoring in place until the pipe has been placed and backfilled at the pipe zone. The trench box shall be raised as the backfilling is done in a manner that will not damage the pipe or permit voids in the backfill. Shoring or sheeting shall be removed after placing the pipe zone. All sheeting, shoring, and bracing of trenches and other excavations shall conform to the safety requirements of the Federal, State, or local public agency having jurisdiction. The most stringent of these requirements shall apply.

3.11 DRAINAGE

Roadside drainage ditches and all other area ditches shall be graded to drain and prevent ponding. Cross-sections and location of ditches shall be as shown in the Drawings. The contractor shall grade area slopes to provide drainage away from roads and facility locations (well heads, pumping stations, above ground tanks, etc.).

3.12 DRAINAGE DITCH RESTORATION

The Contractor shall repair drainage ditches damaged either directly or indirectly by the Contractor's operations. Drainage ditches shall be compacted to 95 percent relative compaction. The Contractor shall correct any ditch leakage occurring as a result of his operations at no cost to the Owner.

3.13 DRAINAGE CULVERTS

Replace in kind drainage culverts, which are removed or damaged. If the pipe is damaged during removal, dispose of it and furnish and install new pipe.

Replace culverts to the existing lines and grades. Do not replace culverts until the work in the immediate area of the culvert has been completed.

At the inlet and outlet of all culverts (new and repaired) the ditch shall be sloped and graded to drain without ponding.

PART 4 - MEASUREMENT AND PAYMENT

Payment for Earthwork including area fill, earth fill, embankments, roadway subgrades, structural backfill, filter fabric, removal and replacement of topsoil, drainage ditches and culverts, crushed rock, shoring and sheeting and riprap shall be paid for on a Lump Sum basis as stated in the **Bid Item Schedule** for the item listed below:

Bid Item No. 6 - EARTHWORK

- END OF SECTION -

SECTION 02320 - TRENCH EXCAVATION AND BACKFILL

PART 1 - GENERAL

1.01 SCOPE
This Section covers the work necessary for the trench excavation, trench stabilization, structural backfill, trench backfill, installation of warning tape and all incidental work, complete. See Section 02300-EARTHWORK, Trench Details included in the Drawings, and the Sacramento County Standard Designs for additional requirements.

1.02 DEFINITIONS
See Section 02300-EARTHWORK for definitions.

1.03 SUBMITTALS
The Contractor shall provide Certifications that all materials to be used on the project meet the requirements of the standards referenced.

Samples of all fill materials to be used shall be submitted two (2) weeks in advance of use. Samples shall consist of 0.5 cubic feet of each type of material.

PART 2 - MATERIALS

2.01 PIPE BEDDING AND PIPE ZONE MATERIAL
Pipe bedding and pipe zone material shall be #2 washed sand. Epoxy lined and coated pipe, schedule 40 PVC pipe, and conduit shall have sand bedding and pipe zone material. Cement mortar coated pipe, C900 and C905 PVC, ductile iron, and wrapped steel pipe smaller than 3 inches in diameter shall have fine grade pipe bedding and zone material.

A. Fine Grade Pipe Bedding and Zone Material
Fine grade pipe bedding and zone material shall consist of natural sand, manufactured sand produced from larger aggregates, or a combination of the two. Sand shall be clean, non-plastic, and free from deleterious or foreign matter and shall otherwise meet the requirements of Section 02300-EARTHWORK, 2.10.

2.02 AGGREGATE BASE
See Section 02300-EARTHWORK for requirements.

2.03 NATIVE MATERIAL
See Section 02300-EARTHWORK for requirements.

2.04 IMPORTED ENGINEERED FILL
See Section 02300-EARTHWORK for requirements.

2.05 TRENCH STABILIZATION MATERIAL

Trench stabilization material shall be 3-inch minus crushed rock, well graded from coarse to fine, containing less than 25-percent by weight particles passing the No. 200 sieve, and free from clay lumps, consolidated masses, and organic material.

PART 3 - EXECUTION

3.01 TRENCH EXCAVATION

Trench excavation is unclassified and shall include removal of all materials or obstructions of any nature, the installation and removal of all sheeting, shoring and bracing, and the control of water, necessary to construct mains, services or other works.

A. Trench Depth and Width

Trenches shall conform to the Trench Details included in the Drawings, and these specifications.

B. Trench Grade

Excavate the trench to the lines and grades shown or as established by the Engineer with proper allowance for pipe thickness, pipe bedding, and trench stabilization material when required. Remove any high spots that would prevent a uniform thickness of bedding. If the trench is excavated below the required grade, correct any part of the trench excavated below the grade at no additional cost to the Owner, with material of the type specified for pipe bedding in this section.

3.02 TRENCH STABILIZATION

When, in the opinion of the Engineer, the existing material in the bottom of the trench is unsuitable for supporting the pipe, excavate below the flow line of the pipe and remove the unsuitable trench material. Backfill the trench to the subgrade of the pipe bedding with trench stabilization material. Place the trench stabilization material over the full width of the trench in maximum 8-inch loose layers and compact to at least 95-percent relative compaction.

3.03 PIPE BEDDING

Place pipe bedding material under the pipe for the full width of the trench in maximum 6-inch lifts. Minimum depth of bedding below the pipe barrel shall be as shown on the Drawings. Excavate bell holes at each joint to permit proper bedding and assembly.

Grade the pipe bedding material, by hand if necessary, to the line and grade to which the pipe is to be laid. The pipe bedding material shall form a continuous and uniform bearing and support for the pipe at every point between bell holes, except that the grade may be disturbed for the removal of lifting tackle. If during pipe installation it is found that a pipe section will be at an incorrect grade, that piece shall be removed and the pipe bedding material regraded to the proper elevation. Compact pipe bedding material to 90-percent relative compaction, in accordance with ASTM D1557.

3.04 PIPE ZONE MATERIAL
Place pipe zone material in even lifts on each side and on top of the pipe. Limit compacted lift thickness to 6-inches and compact with mechanical tampers, rollers, or surface vibrators to at least 90-percent relative compaction and in accordance with ASTM D1557. Operate this equipment to prevent damage to the pipe linings and coatings. The pipe shall not be warped by the compaction procedures. Precautions shall be taken to prevent shifting or flotation of the pipe.

3.05 BACKFILL
Do not push backfill into the trench in such a way as to permit free fall of the material until at least two feet of cover is provided over the top of the pipe. Under no circumstances allow sharp, heavy pieces of material to drop directly onto the pipe or the compacted material around the pipe. Limit compacted lift thickness to 6-inches and compact to the density shown on the Drawings.

3.06 TRENCH BACKFILL IN IMPROVED AREAS
The upper layer of trench backfill material that will be the subgrade for paved, graveled, or other traveled surfaces shall be Class 2 aggregate base and shall be compacted to at least 95-percent relative compaction. Depth of subgrade shall be as shown on the Drawings.

3.07 TRENCHES BELOW SLABS OR STRUCTURAL SECTIONS
Where trenches are located below slabs or structural sections of imported material, the pipe zone material shall continue to the subgrade of the lowest layer of imported structural material beneath the slab or structural section, plus horizontally three feet before and beyond said slab or structural sections.

3.08 MOISTURE CONTROL
Maintain backfill at optimum practical moisture content required for compaction. Add water or dry as required prior to placing material in trench. Supplement, if required, by sprinkling. Do not place excessively dry or wet material in trench and then attempt to compact it or modify its moisture content in place.

3.09 COMPACTION TESTS
Field tests of compacted density will be in accordance with CalTrans 216 (sand cone) or 231 (nuclear gage) at the Engineer's option. See Section 02300-EARTHWORK for additional requirements. The number and frequency of compaction tests will be at the discretion of the Engineer. Initial compaction testing will be at the expense of the Owner, conducted by a firm selected by the Owner. Subsequent testing due to failure of the initial or subsequent test will be paid for by the Owner and deducted from sums due to the Contractor.

3.10 CONTROL OF WATER
When water is encountered, the Contractor shall furnish, install, maintain and operate all necessary machinery, appliances and equipment to keep the excavation reasonably free from

water until the placing of the bedding material, laying and jointing of pipe and fittings, pouring of concrete, and placing of the initial backfill has been completed, inspected and approved, and all danger of flotation and other damage is removed. Ground water pumped from the trench shall be disposed of in such a manner as to not cause injury to public or private property or constitute a nuisance or menace to the public, and the disposal method shall be subject to the approval of the Engineer. See Section 02300-EARTHWORK for additional requirements.

3.11 SHORING, SHEETING, AND BRACING

Safety in trenches 5-feet and deeper may be accomplished by laying back the sides of the trench above the pipe zone material, or by shoring, sheeting, or bracing if approved or as directed by the Engineer. Sheet and brace the excavation when necessary to prevent caving during excavation in unstable material, or to protect workers, adjacent structures, or property. Increase trench widths accordingly by the thickness of the sheeting, shoring, or trench box. Maintain shoring in place as long as required to maintain a safe working area. The sheeting, shoring, or trench box shall be raised as the backfilling is done in a manner that will not damage the pipe or permit voids in the backfill. All sheeting, shoring, and bracing of trenches shall conform to the safety requirements of the Federal, State, or local public agency having jurisdiction. The most stringent of these requirements shall apply.

PART 4 - MEASUREMENT AND PAYMENT

No separate payment will be made for Trench Excavation and Backfill. Payment for work in this Section shall be included as part of the applicable Lump Sum or Unit Prices stated in other Sections.

-END OF SECTION-

SECTION 02740 - PAVING

Bid Item No. 7

PART 1 - GENERAL

1.01 SCOPE
This Section covers all work necessary for placing asphalt concrete, tack coats, header boards and fog seal, complete. See Section 02300-EARTHWORK for additional requirements.

1.02 SUBMITTALS
The contractor shall submit the asphalt design mix and data showing that the asphalt concrete, tack coat, fog seal, and header boards meet the requirements of the referenced standards and manufacturer's installation instructions.

PART 2 - MATERIALS

2.01 ASPHALT CONCRETE
Aggregate shall conform to Section 39 of the CalTrans Standard Specifications and shall be Type B, ½-inch maximum, medium grading. The asphalt binder shall be paving asphalt, grade AR-4000, and conform to Section 92 of the CalTrans Standard Specifications.

2.02 ASPHALTIC EMULSION
Asphalt emulsion for use as a tack coat and crack sealer shall be SS1 and shall conform to Section 94 of the CalTrans Standard Specifications.

2.03 FOG SEAL
Fog seal shall be asphalt emulsion SS1 conforming to Section 94 of the CalTrans Standard Specifications.

2.04 HEADER BOARDS
Headers boards shall be either Redwood or Douglas Fir with an American Wood Preservers Bureau stamp, indicating its use for ground contact and application of L22 waterborne preservative or approved equal.

PART 3 – EXECUTION

3.01 SUBGRADE PREPARATION
The subgrade shall be prepared in accordance with Section 02300-EARTHWORK.

3.02 ASPHALT CONCRETE OVERLAY (Not Used)

3.03 ASPHALT CONCRETE PLACEMENT

Workmanship in producing, hauling, placing, compacting, and finishing asphalt concrete shall conform to Section 39 of the Caltrans Standard Specifications except as modified and supplemented herein. Install an 8-inch compacted layer of aggregate base course in accordance with Caltrans Section 26 and a 3-inch course of asphaltic concrete in accordance with Caltrans Section 39.

The tolerance of the finished grade shall be plus or minus 0.01 feet from the required elevation. The finish grade of new paving shall match the existing pavement and shall conform to the existing cross slope or crown. Variances of more than ¼-inch from the edge of existing pavement to the new pavement shall not be acceptable. Dikes shall be shaped and compacted with an extrusion machine.

3.04 TACK COAT

Before placing asphalt concrete, an asphalt emulsion tack coat shall be applied to all surfaces of existing pavement; to curbs, gutters, slabs and construction joints against which asphalt will be placed; and where specified, at the approximate rate of 0.05 to 0.10 gallons per square yard. Tack coat shall be applied in accordance with the provisions in Section 39-4.02 of the CalTrans Standard Specification.

Immediately prior to construction of asphalt concrete berms, a continuous tack coat shall be applied to the pavement surface. Application of the tack coat shall not cause a slip or weakened plane between the two joined surfaces.

3.05 FOG SEAL

As soon as applicable after paving, all new pavement shall be fog sealed in accordance with CalTrans Section 37. The minimum application rate for the original undiluted emulsion shall be 0.10 gallon per square yard and shall be applied in two applications of 0.05 gallon per square yard. A minimum of 24-hours shall elapse between applications.

3.06 CONSTRUCTION JOINTS

Construction joints shall be made in such a manner as to ensure a neat junction, thorough compaction, and bond throughout. A transverse joint extending over the full width of the strip being laid at right angles to its centerline shall be constructed at the end of each day's work and at any other times when the operations of placing the mixture are suspended for a period of time which will permit the mixture to chill. The forward end of a freshly laid strip shall be thoroughly compacted by rolling before the mixture has become chilled. When work is resumed, the end shall be cut vertically for the full depth of the layer.

3.07 HEADER BOARDS

Header boards shall be provided to protect the edges of asphaltic concrete where the asphalt is unsupported, such as in areas adjacent to planter areas, etc. Header boards are not required in areas where the paving is supported such as against concrete foundations, concrete curbs, and sidewalks. Boards shall be installed as shown on the Drawings.

3.08 PROTECTION OF STRUCTURES

Provide whatever protective coverings may be necessary to protect the exposed portions of culverts, curbs, gutters, posts, guard fences, plantings, trees, and any other structures from splashing oil and asphalt, dirt, or any other undesirable matter than may come upon these structures by reason of the paving operations.

Where water valve boxes, manholes, catch basins, or other underground utility appurtenances are within the area to be surfaced, the surfacing shall be level with the top of the existing finished elevation of these facilities. If it is evident that these facilities are not in accordance with the proposed finished surface, notify the Engineer and adjust the facility to the correct height before proceeding with the resurfacing around the facility, unless otherwise approved. Protect all covers during asphalt application. After completion of the paving operation, all areas are to be cleaned of excess spilled asphalt materials to the satisfaction of the Engineer.

3.09 WEATHER CONDITIONS

Asphalt concrete shall not be placed (1) when the atmospheric temperature is lower than 40 degrees F, (2) during rainfall, (3) when the surface upon which it is to be placed is frozen or wet, or (4) during dust storms or any imminent storms that might adversely affect the construction.

3.10 TESTING

A. Thickness

Pavement thickness shall be as indicated in the Drawings or Specifications, not exceeding +/- 1/4-inch variation in thickness.

B. Smoothness

No pockets or depressions, which cause water to pool, shall be permitted. The surface smoothness of the pavement shall be such that when a 12-foot straightedge is laid across the pavement, the surface shall not deviate from the straightedge more than 1/4-inch.

3.11 EXCESS MATERIALS

The asphalt concrete material removed shall become the property of the Contractor and shall be disposed of off-site in accordance with all applicable State and Local ordinances and the CalTrans Standard Specifications, Section 7-1.13.

3.12 REPAIR OF DEFECTS

Contractor shall remove and replace defective areas by cutting to the full depth of the course. Cuts shall be made perpendicular and parallel to the direction of traffic with edges vertical.

Tack coat shall be applied to all exposed surfaces. The area shall be filled with fresh hot asphaltic concrete mix in maximum lifts of 1.5-inches, to the same depth as the adjacent area, and then compacted by rolling to specified surface density and smoothness.

PART 4 - MEASUREMENT AND PAYMENT

Paving, including new asphalt concrete satisfactorily completed, shall be paid for on a Lump Sum Basis, as stated in the **Bid Item Schedule** for the item listed below:

Bid Item No. 7 - PAVING

-END OF SECTION-

SECTION 02810 - SPRINKLER IRRIGATION SYSTEM

PART 1 - GENERAL

1.01 SCOPE
This section covers the work necessary for furnishing and installing all irrigation system work indicated on the Drawings and specified here.

1.02 SUBSTITUTIONS AND MATERIAL LIST

A. Product names are used as standards only; other materials or methods shall not be used unless approved in writing by the Owner. Burden of proof as to equality of any proposed material shall be upon Contractor; Owner's decision is final. Only one request for substitution shall be considered for each item. Equipment capacities specified are minimum acceptable.

B. Submit a list of materials. All materials to be used, whether substitutions or not, shall be listed in the order in which they appear in the specifications.

C. Any mechanical, electrical, or other changes required for installation of any approved substituted equipment shall be made to satisfaction of Owner and without additional cost to Owner. Approval by Owner of substituted equipment and/or dimensional drawing does not waive these requirements.

D. Approval of material shall not be construed as authorizing any deviations from specifications unless attention of Owner has been directed to specified deviations.

1.03 PROJECT CONDITIONS

A. Information on Drawings, relative to existing conditions, is approximate only. Deviations found necessary during progress of construction to conform to actual conditions, as approved by Owner, shall be made without additional cost to Owner. Contractor shall be held responsible for any damage caused to existing services. Promptly notify Owner if services are found which are not shown on Drawings.

B. Protect all existing utilities within construction area. Repair any damages to utility lines that occur as a result of operations of this work.

C. Verify all dimensions at the masonry wall and check existing conditions before beginning work. Make changes which are necessary to install work in harmony with other crafts; they shall be first approved by Owner.

1.04 MAINTENANCE AND OPERATING INSTRUCTIONS

A. Furnish three complete sets of operating maintenance instructions bound in a hardboard binder and indexed. Start compiling the data upon approval list of materials. Final inspection will not be made until booklets are approved by Owner.

B. These sets shall incorporate the following information:

A. Complete operating instructions for each item of irrigation equipment.

B. Typewritten maintenance instructions for each item of irrigation equipment.

C. Manufacturer's bulletins which explain installation, service, replacement parts, and maintenance.

D. Post service telephone numbers and/or addresses in an appropriate place as designated by Owner.

1.05 RECORD DRAWINGS

Upon completion of work, and as a precedent to final payment, delver to Owner originals of all Drawings showing the work exactly as installed; the Drawings shall be a complete set of reproducibles.

1.06 WARRANTY

Repair or replace any defective work, material or part which may appear within one year of date of acceptance.

PART 2 - MATERIALS

2.01 QUICK COUPLER AND BALL VALVES

A. Quick Couplers shall be type indicated on Drawings.

B. Ball Valves shall be type indicated on Drawings.

2.02 SPRINKLER HEADS AND DRIP EMITTERS

Sprinkler Heads shall be type indicated on Drawings.

2.03 AUTOMATIC CONTROLLER

Controller shall be type indicated on Drawings.

2.04 AUTOMATIC CONTROL VALVES

A. Control Valves shall be type indicated on Drawings.

B. Provide unions to all valves on downstream side

2.05 BACKFLOW PREVENTION DEVICE

See Engineers Drawings.

2.06 AUTOMATIC SPRINKLER CONTROL WIRE

A. Make connections between automatic control valves and controller with 14 UF direct burial plastic coated wire. Splices and connections shall be soldered, taped with layers of Scotchwrap No. 33 for minimum of two inches on each side of splice, and covered with heavy coating of Scotchcoat. Provide mechanical protection for all wire; tape to underside of piping where possible. Wire installed below paving or roadways and where not protected by piping shall be run in underground conduit.

B. All electrical, other than low voltage, such as power wiring, conduit, fuses, thermal overloads and disconnect switches are included under Division 16.

2.07 VALVE BOXES FOR VALVES AND FOR CONTROL WIRE SPLICES

Valves in ground shall be installed in Brooks 120 Jumbo Series for control valves and Brooks 910 Series for quickcoupler valves, gate valves and control wire splices.

2.08 PIPE AND FITTINGS

A. Pressure main line 3 inch and smaller shall be Schedule 40 Type I PVC 1120 ASTM 1785 with Schedule 40 white pipe fittings PVC Type I. Pressure main line 4 inch and larger shall be PVC Ring-Tite, Class 200, 1120-200 psi with Ring-Tite Class 200 psi one piece molded PVC plastic fittings.

B. Lateral lines on discharge side of control valves to and including 2-1/2 inch size (except risers) shall be virgin high impact Class 200 PVC 1120; 3 inch and larger shall be Schedule 40 PVC.

C. All plastic pipe and fittings shall be continuously and permanently marked with the manufacturer's name, type of material, IPS size, schedule, NSF approval, and code number.

D. Plastic pipe fittings and connections shall be made from rigid PVC Schedule 40. Couplings shall be made from extruded stock, reamed with taper. Use of saddles not acceptable.

E. All threaded PVC pipe and nipples shall be IPS Schedules 80 when it is necessary to use threaded connections to gauges, valves, or control valves. Threaded adapters may be used in place of nipples when making pipe to valve connections.

F. Use 45 degree fittings for all changes in depth of pipe, as at transition from the main line to lateral lines.

G. All piping above ground shall be Schedule 40 galvanized steel with cast iron fittings.

H. Sleeves shall be as indicated on Drawings.

I. Risers shall be as indicated on Drawings.

PART 3 - EXECUTION

3.01 EXCAVATING

A. Perform all excavating required for work of this Section.

B. Unless shown otherwise, provide a minimum of one foot six inches above top of pipe to finish grade outside, except one foot minimum cover over plastic pipe downstream of control valves. Trim trench bottom by hand to provide a uniform grade and firm support throughout entire length of pipe free of rocks.

C. Replace or repair, to original condition, all concrete, asphalt paving or other materials, distributed by trenching operation. Repair within warranty period as required.

3.02 INSTALLATION OF PIPING SYSTEM

A. Locate pipes as shown on Drawings except where existing supply valves, utilities or obstructions prohibit or where slight changes are approved to better suit field conditions.

B. Assemble piping systems in accordance with Plastic Piping Systems Installation Guide.

C. Close ends of pipe immediately after installation; leave closure in place until removal is necessary for completion of installation.

D. Each piping system shall be thoroughly flushed and cleaned before connection to equipment. Divert excess water to prevent damage.

3.03 PIPE JOINTS AND CONNECTIONS

A. Cut pipe and tubing square; remove rough edges or burrs.

B. On threaded pipe, make joints with thread lubricant, use no caulking of any kind, remake leaky joints with new material.

C. Make joints using solvent for PVC plastic pipe.

3.04 UNIONS AND FLANGES

A. Install unions or flanges, whether shown or not, at each connection to all equipment, at one connection to each valve, and at all connections to all automatic valves.

B. Locate unions for easy removal of equipment or valve.

3.05 TEST AND ADJUSTMENTS

A. Test installation in accordance with following requirements and all applicable codes.

1. Notify Owner, in writing, at least four days prior to any test.

2. All piping and control wires for future shall be tested at completion of roughing-in or at other times as directed by Owner.

3. Furnish all necessary materials, test pumps, gauges, instruments and labor reburied for testing. Tests shall be witnessed by Owner.

4. Isolate from system all equipment which may be damaged by pressure test.

B. Test schedule

1. No loss in pressure or visible leaks shall show after four hours at pressure indicated:

System Tested	PSI	Agent
Irrigation Piping Upstream of Sprinkler Control Valves	Static	Water
Irrigation Piping Downstream of Sprinkler Control Valves	Static	Water

2. Perform operation test under simulated or actual service conditions including one test of complete installation with all equipment connected and operating.

3. Should any material or work fail in any; of these tests, it shall be immediately removed and replaced by new material, and portion of work replaced shall again be tested at Contractor's expense.

4. Instruct Owner's operating personnel during operating adjustment period.

3.06 BACKFLOW PREVENTION DEVICE
See Engineer's Drawings.

3.07 SPRINKLER HEADS, DRIP EMITTER HEADS, QUICK COUPLING VALVES, AND BALL VALVES
Install all sprinkler heads, quick coupling valves, and ball valves as shown on Drawings.

3.08 CONTROL WIRING

A. Install control wires beneath sprinkler main line whenever possible.

B. Provide 18 inches of slack wire for each wire connected to the automatic control valve. Slack wire shall be coiled and left in the valve box.

C. Snake wires in trench to allow for contraction of wires. Tape wires in bundles every 10 feet - 0 inches.

D. Remote control wire splices will be allowed in valves boxes only. Crimp wires together with approved connector. Seal connection with approved sealing pack.

E. All wire passing under existing or future paving, construction, etc., shall be encased in plastic or galvanized steel conduit extending at least 12 inches beyond edges of paving or construction.

3.09 FLUSHING LINES
Thoroughly flush lines and prove clean prior to installing valves, performing hydrostatic testing, or installing sprinklers.

3.10 AUTOMATIC CONTROL VALVES
Install where shown and where practical; place no closer than 12 inches to walk edges, building walls or fences.

3.11 AUTOMATIC CONTROLLER
Connect automatic control valves to controller in sequence as shown on Drawings.

3.12 BACKFILL AND COMPACTING
After system is operating and required tests and inspections have been made, backfill excavations and trenches, under paved areas, with sand to these Specifications. In all non-paved areas, backfill trenches and excavations, with approved fill, up to finish grade. Compaction for all trenches in non-paved areas shall be 85 percent.

3.13 CLEANUP
Remove all debris resulting from work in this Section.

END OF SECTION

SECTION 02820 - CHAIN LINK FENCING

Bid Item No. 8

PART 1 - GENERAL

1.01 SCOPE
This section covers the work necessary to furnish and install galvanized chain link fencing, gates, and appurtenances, as shown on the Plans.

1.02 SUBMITTALS
Contractor shall make the following submittals to the Engineer.

A. One square foot sample of chain link fabric, and shop drawings showing gage, dimensions, and coating information.

B. Shop drawings showing standard pipe section, wall thickness, coating, and other pertinent information for line posts, gate posts, end posts, and gates.

C. One-foot length of plastic fence slat.

1.03 TEMPORARY FENCING
The Contractor shall furnish and maintain temporary 6-foot high chain link fencing topped with 3-strands of barbed wire around the perimeter of the site and around all storage and trailer areas.

PART 2 - MATERIALS

2.01 GENERAL
All fencing materials shall be hot-dip galvanized after fabrication. Fencin fabric shall be 8-feet high, and black, vinyl coated, unless otherwise shown.

2.02 CHAIN LINK FABRIC
Chain link fabric shall be 2-inch mesh, 9-gage wire, and have a black vinyl coating. Width shall be 8-feet (plus or minus ¾- inch). Fabric shall conform to ASTM A392 and shall have a Class 2 zinc coating. Chain link fabric shall be used for fence and gates.

2.03 FABRIC TIES AND TENSION WIRE
Fabric ties shall be 9-gage galvanized steel wire. Top and bottom tension wires shall be a minimum of 7-gage galvanized coil spring steel.

2.04 POSTS, TOP RAIL, BRACES AND GATE FRAMES
Pipe used shall be ASTM A53, Schedule 40 steel pipe. Posts, rails, braces and frames shall be hot-dip galvanized per ASTM A53, A123 or A153, whichever is applicable. Galvanizing shall

apply at least 2.0 ounces of zinc per square foot of surface. Line posts shall be 2-3/8 inch outside diameter pipe weighing 3.65 pounds per foot. Corner and end posts shall be minimum 2-7/8 inch outside diameter pipe weighing a minimum of 5.79 pounds per foot. Braces and top rails where specified, shall be 1-5/8 inch outside diameter pipe. Gate frames shall be made of minimum 1-5/8 inch outside diameter full weight pipe. Gate posts shall be 4-inch outside diameter weighing 9.11 pound per foot. Each swing gate leaf shall be provided with two diagonal braces.

2.05 TRUSS RODS AND MISCELLANEOUS FITTINGS

Truss rods shall be fabricated of 3/8-inch diameter steel rods and shall have turnbuckles or similar means of adjustment. Gate hinges, drop bar locking devices, caps, gate stops and miscellaneous nuts, bolts, screws, bands, and other appurtenances shall be consistent in quality and strength to the rest of the fence. Fittings used shall be hot-dip galvanized iron or steel with a minimum coating of at least 2.0 ounces of zinc per square foot of surface in accordance with ASTM A123 or A153, whichever is applicable.

2.06 CONCRETE

Concrete for post foundations shall be the same as specified in Section 03300-CONCRETE.

PART 3 – EXECUTION

3.01 FENCE

Line posts shall be equally spaced between corners, end posts and gate posts at a spacing not exceeding 10-feet. Posts shall be set vertical, shall be accurately aligned, and shall have their tops level or at a constant slope between changes in grade. Post top shall permit passage of top rail or rainproof malleable iron caps as applicable.

All posts shall be centered in concrete foundation and shall be set into the concrete to a depth of 36-inches. Corner, end, and gate posts shall be set in concrete foundations not less than 16-inches in diameter, and line posts shall be set in concrete foundations not less than 12-inches in diameter. The top surface of the concrete foundations shall be at least 1-inch above grade, be sloped to drain, and have a neat and uniform appearance.

Corner, end, and gate posts shall be braced to the nearest line post. Corner and end posts shall be braced as shown on the Drawings. Bracing for end, corner, and gate posts shall be horizontal braces with truss rods. Line posts shall be braced horizontally and trussed in both directions with truss rods at 1000-foot minimum intervals. Top rails, shall be in lengths not less than 18-feet and shall be fitted with couplings for connecting lengths into continuous runs. Couplings shall be not less than 6-inches long and allow for expansion and contraction of the rail.

Chain link fabric shall be taut and shall be attached to posts, rails, and wires with galvanized fabric bands or tie wires at a maximum spacing of 12-inches on posts and 18-inches on the rails and tension wires. Stretcher bars shall be provided at ends of fabric. The bottom tension wire shall be stretched tight and shall be located a minimum of 1-inch and a maximum of 2-inches

above finished grade and on a straight grade between posts by excavating the high points of ground, and in no case shall depressions be filled.

3.02 GATES

Gate frames shall be fabricated with welded joints or rigid connectors. The fabric shall be the same as that used for the fence and shall be rigidly attached to the frames. Frames shall be suitably braced and trussed. Gates shall be equipped with suitable offset hinges to permit a 180-degree swing and a drop bar locking device with provision for padlocking. A stop to hold the gate open and a center rest with catch shall be provided.

3.03 GALVANIZED COATING REPAIR

Any galvanized coating damaged during construction of the fencing shall be repaired as stated in Section 09940-COATINGS.

PART 4 - MEASUREMENT AND PAYMENT

Fencing, including gates and appurtenances, satisfactorily completed, shall be paid for on a Lump Sum basis stated in the **Bid Item Schedule** as listed below:

Bid Item No. 8 – CHAIN LINK FENCING

-END OF SECTION-

SECTION 02900 - LANDSCAPING

PART 1 - GENERAL

1.01 SCOPE

This section covers the work necessary for furnishing and installing all landscaping work indicated on the Drawings and specified here.

1.02 WARRANTY

A. Warranty all plant material for the duration of the landscape maintenance period. Plants not alive and in satisfactory growing condition, as determined by Owner, shall be replaced without additional cost to Owner.

B. All repair work shall be as specified in this Section; all plant replacements shall be plants of same kind and size as specified in plant list; furnished and planted as specified.

1.03 QUALITY ASSURANCE

A. Contractor or an experienced foreman shall be present during installation.

B. Owner reserves the right to inspect and reject plant material both at place of growth and at site, before and/or after planting, for compliance with requirements for name, variety, size, and quality.

1.04 SUBMITTALS

Locate all plant materials required for construction within 60 days prior to installation. If specified material is not obtainable, submit to Owner proof of non-availability and proposal for use of equivalent material. Submit photographs of alternative choices of plant material for selection by Owner. Included with these photographs should be clear, written description of the type, size, condition, and general character of the plant material.

1.05 PROTECTION AND CLEAN UP

A. Protection of persons and property shall be provided throughout the progress of the work. Use temporary barricades as required. The work shall proceed in such manner as to minimize the spread of dust and flying particles and to provide safe working conditions for personnel. Store materials and equipment where directed.

B. Execute all work in an orderly and careful manner to protect paving, work of other trades, and other improvements.

C. Be responsible for protection of all existing utilities within construction area; repair, to satisfaction of Owner, any damages to utility lines that occur as a result of operation of this work.

D. Protect landscape work and materials from damage due to landscape operations, operations by other contractors and trades and trespassers. Maintain protection during installation and maintenance periods.

E. Maintain cleanliness of paving areas and other public areas used by equipment and be responsible for immediate removal of all spillage on these pavings. Remove from the project site all rubbish and debris found thereon and all material and debris resulting from the landscaping work, leaving site in a safe and clean conditions.

1.06 RECORD DRAWINGS

Upon completion of work, and as a precedent to final payment, deliver to Owner originals of all Drawings showing the work exactly as installed. Deliver to Owner one (1) complete set of reproducibles of all Drawings, showing the recorded work.

PART 2 - MATERIALS

2.01 GENERAL

A. Material shall be new, in perfect condition, and as specified. Deviation or substitution from Specification and Drawings must be first approved by Owner.

B. Soil amendment shall be a 90% bark base product, 0-1/4 inch size, nitrified dark humus treated with Nitrogen, ½-0-0.

C. Fertilizer for trees and shrubs shall be commercial fertilizer, in tablet form; (12-8-8).

D. Mulch shall be cedar bark (shredded bark) medium size. Submit sample to Owner.

E. Tree stakes and ties shall be as indicated on Drawings.

F. Vitamin B-1 shall be "Superthrive", "Liquinox Start", or "Cal-Liquid".

G. Weed Control shall be "Enide" (Upjohn), "Surflan" (Elanco Products Company) or "Dacthal" (Diamond Chemical".

H. Plant material shall be:

1. As indicated on Drawings. Do not remove container grown stock from containers until planting time. All plants shall be true to name.

2. Healthy, shapely, well-rooted, not pot-bound, free from inspect pests or plant

diseases and properly "hardened off" before planting.

3. Labeled. Label at least one tree and one shrub of each species with a securely attached waterproof tag bearing legible designation of botanical and common name.

PART 3 - EXECUTION

3.01 JOB CONDITIONS

A. Carefully examine the site, verify grade elevations, and observe the conditions under which work is to be performed. Do not proceed with work until unsatisfactory conditions have been corrected in a manner acceptable to Owner.

B. Proceed with the complete landscape work as rapidly as portions of the site become available, working within the seasonal limitations for each kind of landscape work required.

C. Determine location of underground utilities and perform work in a manner which will avoid possible damage. Hand excavate, as required, to minimize possibility of damage to underground utilities. Maintain grade stakes set by others until removal is mutually agreed upon by all parties concerned.

D. When conditions detrimental to seed or plant growth are encountered, such as rubble fill, adverse drainage condition, or obstruction, notify Owner before planting.

3.02 LANDSCAPE PREPARATION

A. General - Rough grading and drainage is not a part of this Section. Discrepancies shall be brought to the attention of the Owner prior to start of landscaping work.

B. All areas to be planted shall be cleared and cultivated to a minimum of 8 inches and shall be loose and friable.

3.03 PREPARATION OF PLANTING PITS

A. Excavate pits and trenches with vertical sides and with bottom of excavation slightly raised at center to provide proper drainage.

B. Loosen hard subsoil in bottom, of excavation. Extend excavation as required to insure proper drainage from plant pits.

C. See Drawings for pit size requirements.

3.04 PLANTING AND FERTILIZATION

A. Layout individual tree and shrub locations and areas for multiple plantings. Stake locations and outline areas and secure Owner's acceptance before start of planting work. Make minor adjustments as may be requested.

B. Set container grown stock in center of pit. In hot weather, pre-wet the pit. When set, place additional backfill around base and sides of root ball. Work each layer to settle backfill and eliminate voids of air pockets. Compact thoroughly lower half of backfill in plant pit.

C. Place fertilizer planting tablets in root zone and alongside of each plant. Follow manufacturer's instructions for the amount of tablets to use for each container size.

D. Water after planting. Build a temporary watering basin around the base of each plant, unless otherwise directed. Inside of each basin evenly spread mulch to a depth of two inches.

E. See Drawings for additional information.

3.05 VITAMIN B-1

Add Vitamin B-1, in the proper solution as recommended by the manufacturer, to the second watering of each watering basin.

3.06 WEED CONTROL

Pre-emergent herbicide shall be applied at rate recommended by the manufacturer to all shrub areas. Notify Owner of time of installation for verification of application.

3.07 MULCHING

Mulch shall be applied as a top dressing to all shrub planters at the rate of 6 cubic yards per 1,000 sq. ft. Do not apply mulch until the pre-emergent herbicide has been applied.

3.08 GROOMING OF TREES AND SHRUBS

A. Prune, thin out and shape in accordance with standard horticultural practice and as directed by Owner. Prune to retain natural character to accomplish their use in the landscape design. Required plant sizes are the size after pruning.

B. Remove and replace excessively pruned or misformed plants resulting from improper pruning.

3.09 SOIL PREPARATION AND FERTILIZATION FOR ALL PLANTED AREAS

A. All planted areas shall be cleared, weeded, and ripped and cross ripped to a depth of 8 inches.

B. Apply Soil Amendment at the rate of 6 cubic yards per 1,000 square feet, and thoroughly incorporate them to a depth of 6 inches by means of rototiller or equal.

C. Operate sprinkler irrigation system to attain moisture to a depth of not less than 8 inches and to settle the soil. Avoid runoff and ponding.

3.10 MAINTENANCE PERIOD

A. The landscape maintenance period shall commence upon completion of all planting, as verified by Owner, and shall continue for a minimum period of 60 calendar days and to the final acceptance of the total project by the Owner. During this period, all planting shall be kept in a healthy growing condition by watering, weeding, cultivating, pruning, spraying, fertilizing, trimming, and by performing any other necessary operation of maintenance.

B. Refertilize all planted areas at the rate of 10 lbs per 1,000 square feet at the end of the maintenance period.

C. Request, 48 hours in advance, on-site visits to start and end the maintenance period.

D. Guarantee all new plant materials as outlined in Paragraph 1.4 of this Section.

END OF SECTION

SECTION 03300 - CONCRETE

Bid Item No. 9

PART 1 - GENERAL

1.01 SCOPE
This Section covers the work necessary for furnishing and placing all concrete for construction of the pump station foundation, sidewalks, gutters, drive approaches, utility pads, thrust blocks, including forms, reinforcing steel, finishing, fence footings, and all other miscellaneous concrete work on the site, complete.

1.02 STANDARDS
All work in this section shall conform to the requirements in the Specifications and Drawings, the applicable Sacramento County Standard Designs, the applicable City of Citrus Heights standards and in accordance with the applicable ACI, ASTM, and CRSI Standards.

1.03 SUBMITTALS
The Contractor shall make the following submittals for the Engineers approval.

A. Complete data on the concrete mix including aggregate gradations and admixtures in conformance with ASTM C94 Alternate 2.

B. Submit either data compiled by a certified Testing Laboratory from a minimum of 30 previous compression tests or a batch test for each proposed mix design.

C. Curing compound data, including the manufacturers application instructions.

D. Reinforcing steel shop drawings in accordance with CRSI 1990 Manual of Standard Practice and ACI SP.

1.04 TESTING
The Engineer, at the Owner's expense, shall have test cylinders taken and tested by an approved independent testing laboratory to verify strength of the concrete, in conformance with ASTM C31. Acceptance and evaluation of the concrete strengths shall be by the Engineer in accordance with ACI 318.

PART 2 - MATERIALS

2.01 PORTLAND CEMENT
Portland cement shall be Type II Low Akali Portland Cement and shall meet the requirements of ASTM Standard C150 as last amended.

2.02 CONCRETE

A. Mixing

Concrete shall be ready-mixed. Ready mix concrete shall conform to ASTM C94, Alternate 2. Concrete shall be placed within 1-1/2 hours after cement has been added to the mix. A delivery ticket shall be furnished to the Engineer in accordance with ASTM C94, including the following information:

Name of concrete firm
Serial number of ticket
Date
Truck number
Specific class of concrete
Amount of concrete
Time loaded
Water added (time and amount of water added)
Time unloaded

B. Slump

Slump range shall be 3 to 4 inches for the pump station slab, sidewalk, gutters, and utility pads, and 3 to 5 inches for pipe embedment, pipe and fence encasements and thrust blocks.

C. Compressive Strength

Minimum allowable 28-day compressive strength shall be 3,000 psi when cured and tested in conformance with ASTM C31 and C39.

2.03 AGGREGATE

Aggregate shall be furnished from one source, be free from deleterious coatings and substances in accordance with ASTM C33, free of materials and aggregates causing pop outs, discoloration, staining, or other defects on the surface of the concrete, and conform to the 1-inch maximum gradation as shown below.

Grading Limits	
Sieve Sizes	Percent Passing
1".....	90-100
¾”. ……	55-100
3/8”.....	45-75
No. 4.....	35-60
No. 8.....	27-45
No. 16.....	20-35
No. 30.....	12-25
No. 50.....	5-15
No. 100.....	1-8
No. 200.....	0-4

2.04 WATER

Water used in mixing concrete shall be clean and free from deleterious quantities of acids, alkalis, salts, or organic materials.

2.05 REINFORCING STEEL

Bars shall meet the requirements of ASTM Standards A615, Grade 40 for No. 5 and smaller and Grade 60 for No. 6 and larger, as last amended, for structural grade, deformed bars.

Welded wire fabric shall meet the requirements of ASTM Standard A185, as last amended. Refer to the Drawings for requirements for the masonry building and slab.

2.06 FORMS

Forms shall be mortartight, true to the dimensions, lines and grades of the structure, and of sufficient strength to prevent dislocation of the formwork during the placement of the concrete. Forms shall be subject to the Engineer’s approval and shall follow the recommendations of “Guide to Formwork for Concrete” as reported by ACI Committee 347, unless otherwise specified.

2.07 FORM TIES

Form ties shall have conical or spherical type inserts, inserts shall be fixed so that they remain in contact with forming material, and shall be constructed so that no metal is within one-inch (1”) of the concrete surface when the forms, inserts, and tie ends are removed. Wire ties shall not be permitted. Ties shall withstand all pressures and limit deflection of forms to acceptable limits.

2.08 BITUMINOUS TYPE PREMOLDED JOINT FILLER
Bituminous type premolded joint filler shall conform to ASTM D994 or D1751, unless otherwise shown or specified.

2.09 CURING COMPOUND
The curing compound shall be Non-Pigmented-Chlorinated Rubber Base-Clear (CalTrans Standard Specifications 8030-71D 06) or Non-Pigmented, conforming to ASTM Designation C309, Type 1, Class B.

2.10 VAPOR BARRIER
Subgrade preparation of the concrete floor slab shall include applying a 0.004-inch thick polyethylene film vapor barrier over a 4-inch thick ¾-inch maximum clean, crushed rock layer. The polyethylene film shall be Visqueen as manufactured by Visking Co., Fremont, CA, or approved equal, and shall be installed per the manufacturer's instructions.

2.11 NONSHRINK GROUT, CEMENT GROUT, AND BONDING COMPOUNDS
Refer to Section 03600-GROUT for requirements

PART 3 - EXECUTION

3.01 FORMS
Concrete structures shall be constructed as shown on the Drawings and in accordance with the applicable ACI, ASTM, and CRSI Specifications. Construct forms accurately to dimensions and elevations required and to be strong and unyielding. Construct forms with tight joints to prevent the escape of mortar and to avoid the formation of fins. Brace as required to prevent distortion and to fully support all loads during concrete placement and curing.

The inside surfaces of forms shall be cleaned of all dirt, mortar, and foreign material prior to placing concrete. Form ties on exposed surfaces shall be located in a uniform pattern as specified in the CRSI Standards. Form ties shall be constructed so that the tie remains embedded in the wall, except for a removable portion at each end. Forms shall be kept damp prior to placing concrete.

3.02 PLACING REINFORCING STEEL
Place reinforcing steel, in accordance with the Drawings and CRSI Recommended Practice for Placing Reinforcing Bars, except as modified herein. Reinforcing steel shall be clean and free of paint, loose rust, scale, and shall be securely held in place and tied at all intersections, corners, and splices. Minimum length of splices shall be as specified. Top bars shall be defined as any horizontal bar placed such that 12-inches of fresh concrete is cast below in any single pour. Horizontal wall bars are considered top bars. All top bars shall have a 32-diameter lap with a minimum of 12-inches. All other bars shall have a 30-diameter lap with a minimum of 12-inches. Tie splices with 18-gauge annealed wire as specified in the referenced CRSI standard. All reinforcements shall be clean and free of paint, loose rust, and scale.

Provide concrete block of same strength as the concrete mix to support reinforcing bars or wire. Do not use broken concrete brick or stone.

3.03 PLACING CONCRETE

Prior to placing concrete, remove all water, debris, and foreign objects from the excavation and from the forms. Check the reinforcing steel, for proper placement and correct any discrepancies.

Place concrete without segregation or loss of ingredients and without splashing forms or steel above. The vertical drop to final placement shall not exceed 6-feet. Placement shall conform to the requirements of ACI 318, except as modified herein. No concrete shall be placed or used after it has begun to set, and no tempering shall be allowed. Chuting will be permitted only if means are taken to prevent segregation.

Do not place concrete when the ambient temperature is below 40-degrees F or approaching 40-degrees F and falling, without special protection as approved by the Engineer. Any concrete damaged by freezing shall be removed and replaced at no additional cost to the Owner. Contractor shall conform to the requirements of "Hot Weather Concreting" as reported by ACI Committee 305R when concreting in hot weather.

3.04 COMPACTION

All concrete shall be vibrated during placement to assure a dense and homogeneous set. Apply approved vibrator at points spaced not farther apart than vibrator's effective radius. Apply close enough to forms to vibrate surface effectively but not damage form surfaces. Vibrate until concrete becomes uniformly plastic. Vibrator must penetrate the freshly placed concrete and into the previous layer of concrete below. Care shall be taken not to over vibrate causing segregation of aggregates.

3.05 EXPANSION JOINTS

The premolded joint filler shall be of sufficient width to completely fill the joint space.

3.06 CONSTRUCTION JOINTS

Locate as shown or as approved, except that maximum spacing between construction joints shall be 40 feet.

3.07 FINISHING

Concrete work for the pump station slab shall be ball floated with a wood float and finished with a light broom finish for bounding to a non-skid sanded epoxy coating. See Section 09900-PAINTING for additional requirements. All exposed edges shall be finished with a steel edging tool and the outside exposed edge shall be formed with a 1-inch chamfer. Do not absorb wet spots with neat cement.

Sidewalks and exterior slabs available to foot traffic shall be ball floated with a wood float, wood troweled, and lightly troweled with a steel trowel, and finished with a light broom to obtain a nonskid surface. Broom finish sidewalks at a right angle to walk way and curb and gutter parallel with street. All exposed edges shall be finished with a steel edging tool.

All other concrete work shall be ball floated with wood float and troweled with steel trowel to a smooth finish free from trowel marks.

3.08 REMOVAL OF FORMS

Remove formwork and bracing a minimum of three (3) days after pouring, after concrete has set sufficiently to carry the dead load and construction load it has to sustain and when approved by the Engineer. Remove forms with care to prevent scarring and damaging the surface.

3.09 PROTECTION AND CURING

Protect fresh concrete from direct rays of the sun, drying winds, and wash by rain. Cure formed surfaces with an approved curing compound applied in conformance with the manufacturer's directions. The curing compound shall be uniformly applied immediately after the finishing operation, before the moisture sheen disappears from the surface and as soon as the forms are removed. The curing compound shall be used within 120-days of manufacture.

3.10 PATCHING

Cut out all honeycombed and defective areas. Cut edges perpendicular to the surface at least 1-inch deep, no feather edge allowed, and patch. Using bonding agent, fill holes flush with cement grout. Rub surface with wood float and burlap. Keep patches damp for a minimum of seven (7) days or spray with curing compound to minimize shrinking. Fill all form tie holes in the same manner. Defective work shall be corrected to the satisfaction of the Engineer.

3.11 CONCRETE BEDDING AND ENCASEMENT

Place concrete bedding up to a height of 1/3 of the outside diameter of the pipe in all trenches requiring concrete bedding. Place concrete bedding and encasement in such a manner that no dirt or foreign material becomes mixed with the concrete. Concrete shall be placed as shown on the Drawings. Concrete shall have sufficient strength before any additional backfill material is placed in the trench.

3.12 DUCT BANKS

Duct bank concrete shall be compacted by rodding or spading only. Mechanical vibrators shall not be used. Concrete shall be worked around reinforcement and embedments and into corners of the forms. After screeding and before final floating a red concrete surface coloring shall be dusted on the fresh concrete surface at the rate recommended by the manufacturer.

3.13 EMBEDMENTS

Gate frames, fence posts and footings, light fixtures, gate thimbles, special castings, channels or other miscellaneous metal parts that are to be embedded in the concrete shall be set and secured in the forms prior to concrete placement. Unless otherwise specified, anchor bolts and inserts shall be embedded in concrete as shown. The Contractor shall provide inserts, anchors or other bolts necessary for the attachment of piping, valves, metal parts and equipment. Operators or sleeves for gate or valve stems shall be positioned to clear reinforcing steel, conduit and other embedments, and to align accurately with equipment.

3.14 FAILURE TO MEET STRENGTH REQUIREMENTS

Failure to meet the minimum 28-day compressive strength required shall be basis for rejection of the concrete. The under strength concrete shall be removed and replaced at no additional cost to the Owner.

PART 4 - MEASUREMENT AND PAYMENT

All work as specified herein, satisfactorily completed, shall be paid for on a Lump Sum basis stated in the **Bid Item Schedule** for the item listed below:

Bid Item No. 9 - CONCRETE

-END OF SECTION-

SECTION 03400 - PRECAST CONCRETE

PART 1 - GENERAL

1.01 SCOPE
This Section covers the work necessary to furnish and install all precast concrete boxes, catch basins, manholes and appurtenances, complete.

1.02 SUBMITTALS
The Contractor shall make the following submittals:

A. Shop drawings for all precast concrete items. Submitted drawings shall show all dimensions, location and type of embedded items, knockouts, lifting inserts, and details of reinforcement and joints.

B. The design criteria used by the manufacturer, for all precast items.

C. Approved ICBO reports for all lifting inserts, showing allowable design loads on the inserts.

D. Verification of compressive strength. Such verification shall be laboratory trial batch test results with a minimum of three test cylinders or a series of production compression tests with a minimum of 20 sets of test data which fall within the acceptance criteria specified herein. Such tests must have been made within the previous 2-years on the identical concrete mix submitted.

1.03 QUALITY ASSURANCE
Test methods and criteria for evaluation and acceptance of concrete shall be as specified in Section 03300-CONCRETE.

PART 2 - MATERIALS

2.01 - PRECAST BOXES AND MANHOLES
Precast boxes, manholes, covers and related appurtenances shall conform to the applicable Sacramento County Standard Designs and these Specifications.

A. Size
Boxes and manhole dimensions shall be as required on the Drawings.

B. Material
Concrete used for precast boxes, vaults, and manholes shall have a minimum compressive strength of 3,000 psi.

C. Covers

Unless otherwise noted on the Drawings, valve and meter boxes shall have cast iron covers. Valve boxes shall have triangular-shaped covers. The frames and lids shall be provided by the box or vault manufacturer. All covers shall have a minimum of two hex head bolts to secure them to the frame. Covers shall have lifting handles. When leveling bolts are used to set the vault top sections, the Contractor shall ensure that the load on the vault will be transferred through the mortar to the vaults and will not be carried by the leveling bolts. All covers shall be marked with cast-in or weld bead lettering to identify the service as shown. All manhole covers which do not fit neatly and bear firmly in the ring will be rejected.

D. Loading

Where boxes, vaults, or manholes are in areas which may be subjected to vehicular traffic, they shall be designed for H-20 traffic loading. In other areas, they shall be designed for a vertical live load of 300 psf. Lateral loads on all boxes, vaults, and manhole walls shall be as follows:

1. Soil Static: 65 x h (psf) triangular equivalent fluid pressure plus surcharge of 240 psf in areas designated for vehicular traffic, where h = depth of fill.

2. Soil Seismic: 29 x h (psf) uniform load distribution, where h=depth of fill

3. Seismic Acceleration: As determined using the provisions set forth in the 2007 CBC using I=1.25.

2.02 PRECAST STORM DRAIN MANHOLES AND COVERS

Precast manhole barrels, risers, cones, and grade rings shall conform to ASTM C478 with the additional requirement that the cement used shall be Type II. Standard concentric cones shall be used on all manholes and manhole sections shall be manufactured without the provision for steps. Manhole bases shall be precast when the internal diameter of the largest pipe is less than thirty-three inches (33”). Standard concentric cones conforming to ASTM C478 shall be used. Storm drain manholes and manhole covers shall conform to the County of Sacramento Standard Designs.

2.03 SITE-CAST ITEMS

Site-cast items shall conform to Section-03300 CONCRETE and shall include all reinforcing steel, embeds, and other items necessary for such placement. All portions of embeds which remain embedded in the concrete shall be made of stainless steel.

2.04 PREFORMED JOINT SEALANT

The joint sealing compound shall be Quik-Seal, a preformed, cold-applied, ready to use plastic joint sealing compound as supplied by Quikset Utility Vaults; Ram-Neck by K.T. Snyder Company; or equal.

2.05 RESILIENT CONNECTORS
Resilient connectors shall conform to ASTM C 923 and shall be a flexible compression gasket, which is set during the Precast process or a boot connector, shall be Calpico Pipe Link, Kor-N-Seal, A-lock, or approved equal.

2.06 NONSHRINK GROUT
Nonshrink grout shall conform to Section 03600-GROUT.

2.07 MORTAR
Mortar used in finishing manholes shall conform to CalTrans Section 51-1.135.

2.08 EPOXY ADHESIVE
Epoxy adhesive shall conform to CalTrans Section 95-2.05.

2.09 CLEAN CRUSHED ROCK
Crushed rock shall conform to Section 02300-EARTHWORK.

PART 3 - EXECUTION

3.01 INSTALLATION
Precast items shall be installed in accordance with the manufacturer's recommendations, the County of Sacramento Standard Designs, and these Specifications, unless otherwise shown on the Drawings.

All precast items shall be set on a minimum foundation of 6 inches of ¾-inch crushed rock. Connections to manufactured, precast items shall be made by casting sections of pipe into the items, using nonshrink grout as shown on the Drawings, and/or using an approved resilient connector, unless otherwise specified. All such connections shall be watertight.

3.02 STORM DRAIN MANHOLES
Construction of storm drain manholes shall conform to the American Public Works Standards, Detail B20-1 and these Specifications. Pipe connections to precast manhole bases shall be made with a resilient connector. For cast-in-place bases the connection shall be made with a water stop. All connections shall be water and soil tight. The method of placement of mortar to finish the manhole shall conform to CalTrans Section 51-1-135.

Joints in precast manhole shafts shall be sealed by buttering the joint space of the previously laid barrel section or base with mortar or shall be sealed with preformed plastic sealing compound and installed as recommended by the manufacturer. All joint surfaces shall be thoroughly cleaned prior to placing the sealing compound or buttering with mortar. The inside and outside of mortared joints shall be plastered with mortar and the inside brushed to a smooth finish with a wet brush. Special precautions shall be taken to see that the entire joint space is filled with mortar, is watertight, and is approved by the Engineer.

The joint between the manhole frame and the cone or grade ring shall be sealed by buttering the joint space with mortar, or the joint shall be sealed using an epoxy adhesive.

3.03 TESTING

All storm drain precast manholes shall be tested in accordance with Section 15950-PERFORMANCE TESTING.

PART 4 - MEASUREMENT AND PAYMENT

No separate payment will be made for Precast Concrete. Payment for work in this Section shall be included as part of the applicable Lump Sum or Unit Prices stated in other Sections.

-END OF SECTION-

SECTION 03600 - GROUT

PART 1 - GENERAL

1.01 SCOPE
This Section covers the work necessary for structural, miscellaneous, and other uses of grout as indicated on the Drawings, complete.

1.02 SUBMITTALS
The following information shall be provided:

A. Manufacturer's Data:
Manufacturer's Data is required for the following:

1. Bonding compounds
2. Nonshrink grout
3. Pressure grout
4. Retardants
5. Epoxy grout
6. Polymer concrete

B. Laboratory Test Reports:
Test reports on previously tested materials shall be accompanied by the manufacturer's statement that the previously tested material is the same type, quality, manufacture, and make as that proposed for use in this project. Test reports are required for the following:

1. Cement
2. Aggregates
3. Retardants
4. Bonding compounds
5. Epoxy resin

PART 2 - MATERIALS

2.01 DRYPACK GROUT
Drypack grout shall be a mixture of approximately 1-part cement, 1.5 to 2-parts sand, water reducing retarder, and sufficient water to make a stiff workable mix.

2.02 CEMENT GROUT
Cement grout shall be a mixture of 1-part cement, 1.5-parts sand, proportioned by volume, admixtures for pressure grouting, and sufficient water to form a workable mix.

2.03 NONSHRINK GROUT

Nonshrink grout shall be a prepackaged, inorganic, nongas-liberating, nonmetallic, cement-based grout requiring only the addition of water. Manufacturer's instructions shall be printed on each bag or other container in which the materials are packaged. The specific formulation for the nonshrink gout specified herein shall be that recommended by the manufacturer for the particular application.

Nonshrink grout shall have a minimum 28-day compressive strength of 5,000 psi, shall have no shrinkage (0.0 percent) and a maximum 4.0 percent expansion in the plastic state when tested in accordance with ASTM C 827, and shall have no shrinkage (0.0 percent) and a maximum of 0.2 percent expansion in the hardened state when tested in accordance with the U.S. Army Corp. of Engineers, Concrete Research Division (CRD) standard CRD-C621.

1. Class A nonshrink grout shall be used for the repair of all holes and defects in concrete members which are water bearing or in contact with soil or other fill material, grouting under all equipment baseplates, grouting under all baseplates for structural steel members, grouting railing posts in place, and at all locations where grout is specified in the Contract Documents.

2.04 EPOXY GROUT FOR CRACK REPAIR AND DOWEL ANCHORAGE

Except as noted below, epoxy grout shall be a high modulus, two-component, moisture insensitive, 100 percent solids, thermosetting modified polyamid epoxy compound. The consistency shall be a paste form capable of not sagging in horizontal or overhead anchoring configurations. Material shall conform to ASTM C881 Type 1, Grade 3, such as Adhesive Engineering Concresive 1440 series, Sika Corporation Sikadur Hi-Mod Series, Adhesive Technology Corporation Solidbond 200 or equal, and shall have a heat deflection temperature in excess of 130 degrees F.

Epoxy for pressure grouting/crack injection shall be a two-component, moisture insensitive, high modulus, injection grade, 100 percent solids, blend of epoxy-resin compounds. The consistency shall be as required to achieve complete penetration in hairline cracks and larger. Material shall conform to ASTM C881 Type 1 Grade 1, such as Sika Corporation Sikadur 52, Adhesive Engineering Company SCB products, Adhesive Technology Corporation SLV 300 series, or equal.

2.05 POLYMER CONCRETE (FOR RESURFACING OR PATCHING):

Polymer concrete (for resurfacing or patching) shall consist of a liquid binder and dry aggregate mixed together to make a mortar or grout of a consistency as required for the application. The liquid binder shall be chemical and oil resistant, stress relieved, low modulus, moisture insensitive, two-component epoxy-resin compound. Material shall conform to ASTM C881 Type 3 Grade 1, such as Sika Corporation Sikadur Lo-Mod series, Adhesive Engineering Concresive 1470, Adhesive Technology Corporation 400 series, or equal.

The aggregate shall be oven dry in sealed packages until time of mixing, and shall be of size and

consistency compatible with recommendations of manufacturer of liquid binder for intended application.

2.06 ADHESIVE CAPSULES FOR DOWEL ANCHORAGE

Adhesive resin capsules shall consist of sealed glass capsules containing premeasured amounts of polyester or vinylester resin, quartz sand aggregate and a hardener contained in a separate vial within the capsule. Adhesive capsules shall be Hilti HEA Capsules, Molly Parabond Capsules, or equal.

2.07 BONDING COMPOUNDS

Epoxy resin bonding compounds shall be used for wet areas and shall be Adhesive Engineering, Concresive Nos. 1001, 1001-LPL or 1180 as applicable; Sika Chemical Corporation, Sikadur 35, Hi-Mod LV, Sikadur 32, Hi-Mod, or Sikadur 31, Hi-Mod Gel as applicable; Burke Company 881 LPL Epoxy; or equal.

Non-epoxy bonding compounds shall be used for dry areas and shall be Burke Company, Acrylic Bondcrete; Imperial Chemical Industrial, Inc., Thoro System Products, Acryl 60; Thorobond; or equal. Bonding compounds shall be applied in accordance with the manufacturer's instructions.

2.08 ADMIXTURES

A. General

Admixtures shall be compatible with the grout. Calcium chloride or admixtures containing calcium chloride are not acceptable. Admixtures shall be used in accordance with the manufacturer's recommendations and shall be added separately to the grout mix.

B. Water Reducing Retarder

Water reducing retarder shall be ASTM C494 Type D and shall be Master Builders Pozzolith 300-R, Sika Corporation Plastiment, or equal.

C. Lubricant for Cement Pressure Grouting

Lubricant additive for cement pressure grouting shall be Intrusion Prepakt Intrusion Aid, Sika Intraplast N, or equal.

2.09 WATER

Water for washing aggregate, for mixing and for curing shall be free from oil and deleterious amounts of acids, alkalies, and organic materials; shall not contain more than 1,000 mg/1 of chlorides as C1, nor more than 1,300 mg/l of sulfates as SO_4; and shall not contain an amount of impurities that may cause a change of more than 25-percent in the setting time of the cement nor a reduction of more than 5-percent in the compressive strength of the grout at 14-days when compared with the result obtained with distilled water. Additionally, water used for curing shall not contain an amount of impurities sufficient to discolor the grout.

2.10 AGGREGATE

A. General

Aggregate shall be non-reactive and shall be washed before use. When sources of aggregate are changed, test reports shall be provided for the new material. The tests specified shall be performed prior to commencing grout work.

B. Fine Aggregate

Fine aggregate shall be hard, dense, durable particles of either sand or crushed stone well graded from coarse to fine and shall conform to ASTM C33 as modified herein. When tested in accordance with ASTM C136, gradation shall be such that 100-percent by weight will pass a standard No. 8 mesh sieve and no less than 45-percent by weight will pass a standard No. 40 mesh sieve.

2.11 PRESSURE GROUTING EQUIPMENT

Pressure grouting equipment shall include a mixer and holdover agitator tanks and shall be designed to place grout at pressures up to 50-psi. Gages shall be provided to indicate pressure used. The mixer shall be provided with a meter capable of indicating to one-tenth of a cubic foot the volume of grout used.

PART 3 - EXECUTION

3.01 GENERAL

Primer, if required for polymer concrete, shall be provided per manufacturer's recommendation.

3.02 DRYPACK GROUT

Drypack grout shall be used for built-up surfaces, setting miscellaneous metal items and minor repairs. Surfaces required to be built up with drypack grout shall be roughened by brushing, cleaned, and coated with the bonding compound before the application of the grout. The drypack grout shall be applied immediately following the application of the bonding compound in bands or strips to form a covering of the required thickness. The covering shall be smooth. Construction joints in the grout shall be sloped and shall be cleaned and wetted before application is resumed. Grout shall not be placed during freezing weather unless adequate protection is provided.

3.03 CEMENT GROUT

Cement grout shall be used for filling nonbearing portions of equipment pads and pressure grouting. Cement grout shall be mixed in a revolving drum or revolving blade type mortar mixer or hand mixed in a watertight mixing box. When hand mixed, the material shall be thoroughly mixed dry and then sufficient water added to bring the mixture to a workable consistency. Grout must be used before it has taken an initial set, and no retempering with additional water shall be permitted. Grout shall be mixed for a period of at least 1-minute after water is added. Grout shall be agitated to keep ingredients mixed.

3.04 NONSHRINK GROUT

Nonshrink, nonmetallic aggregate grout shall be used for the bearing surfaces of machinery and equipment bases, column base plates and bearing plates. Nonshrink metallic aggregate grout shall be used for setting anchor bolts and grouting reinforcing steel holes. Grout shall meet the requirements of CRD-C621 and shall be placed in accordance with manufacturer's instructions.

Holes required for grouting shall be blown clean with compressed air and left free of dust or standing water. Horizontal holes for grouting shall be drilled at a slight downward angle to facilitate holding the grout until setting is complete. Bolts or reinforcing steel installed in horizontal grout holes shall be bent slightly accordingly.

3.05 EPOXY GROUT

Epoxy grout shall be used for repairing cracks by pressure grouting or gravity flow, repairing structural concrete, and may be used for setting reinforcing dowels or anchor bolts into holes for grouting. Concrete shall be primed in accordance with the grout manufacturer's instructions. Use of epoxy grout for anchorage of bolts or reinforcing dowels shall be subject to the following conditions:

A. Use shall be limited to locations where exposure, on an intermittent or continuous basis, to acid concentrations higher than 10-percent, to chlorine gas, or to machine or diesel oils, is extremely unlikely.

B. Use shall be limited to applications where exposure to fire or exposure to concrete or rod temperature above the product's heat deflection temperature or 120-degrees F (whichever is less) is extremely unlikely. Overhead applications (such as pipe supports) because of the above concerns, shall be disallowed.

C. Approval from the Engineer for specific application and from supplier of equipment to be anchored, if applicable.

D. Anchor diameter and grade of steel shall be per Contract Documents or per supplier specifications. Anchor shall be threaded or deformed full length of embedment and shall be free of rust, scale, grease, and oils.

E. Embedment depth and hole diameter shall be as specified.

F. Holes shall have rough surfaces, such as can be achieved using a rotary percussion drill.

G. Holes shall be blown clean with compressed air and be free of dust or standing water prior to application of grout.

H. Anchors shall be left undisturbed and unloaded for full curing period.

I. Anchors shall not be placed in concrete below 40-degrees F.

3.06 ADHESIVE CAPSULES

Adhesive resin capsules may be used for setting and anchoring reinforcing dowels or anchor bolts into predrilled holes in concrete. Use of the adhesive resin capsules for anchorage of reinforcing dowels or bolts shall be subject to conditions A through D and F through I, as listed in preceding paragraphs under Epoxy Grout and as herein specified.

Embedment depth shall be as specified. Adhesive capsules of different diameters may be used to obtain proper volume for the embedment, but no more than two capsules per anchor may be used. When installing different diameter capsules in the same hole, the larger diameter capsule shall be installed first. Any extension or protrusion of the capsule from the hole is prohibited.

3.07 PRESSURE GROUTING

Prior to grouting, systems and holes to be grouted shall be washed clean. Washing is not required for grouting soil voids outside pipe cylinders or casing pipes. Grouting, once commenced, shall be completed without stoppage. In case of breakdown of equipment, the Contractor shall wash out the grouting system sufficiently to ensure that fresh grout and adequate bond and penetration will occur upon restarting the grouting operation. Grout pressure shall be maintained until grout has set.

3.08 CURING

Drypack grout, and cement grout shall be cured in accordance with Section 03300-CONCRETE. Non Shrink grout shall be protected against rapid loss of moisture by covering with wet cloths or polyethylene sheets. After edge finishing is completed, the grout shall be wet cured for at least 3-days and then an acceptable membrane curing compound shall be applied.

PART 4 - MEASUREMENT AND PAYMENT

No separate payment will be made for Grouting. Payment for work in this Section shall be included as part of the applicable Lump Sum or Unit Prices stated in other Sections.

-END OF SECTION-

SECTION 04200 - CONCRETE MASONRY UNITS

PART 1 - GENERAL

1.01 SCOPE
This Section covers the work necessary for furnishing and installing concrete masonry units, anchors, sleeves, frames, structural steel, lintels, anchor bolts, and all other items required, complete.

1.02 GENERAL
Concrete masonry structures shall be constructed of units of the types, dimensions, arrangements, and coursing indicated on the Drawings and specified herein, complete with all materials, accessories, and appurtenances as indicated, specified or required.

1.03 SUBMITTALS
Before masonry construction is begun, the following drawings, data, specimens, and samples shall be submitted in accordance with the Submittals section:

A. Results of mortar compressive strength performed in accordance with Uniform Building Code Standard 21-16.

B. Results of tests of compressive strength of concrete grout in accordance with UBC Standard No. 21-19.

C. Cold and hot weather construction procedures.

D. Results of tests of masonry units and materials; certified test reports of three sample concrete masonry units of each type proposed to be used on the job, performed by an independent testing laboratory acceptable to the Engineer, indicating that the material proposed for use meet the requirements of these specifications. Test results shall include, but not be limited to, compressive strength, linear shrinkage, total absorption, moisture content as a percent of total absorption, and unit weight. Tests shall be performed in accordance with ASTM C 90, ASTM C 140, and ASTM C 426.

E. Two full-size concrete masonry unit samples of each type of masonry unit proposed for color and quality approval.

F. Drawings showing placement of all rebar within masonry units.

1.04 STORAGE AND HANDLING
All masonry units shall be handled in a manner which will prevent soiling, chipping, or damage of any kind. Broken, discolored, chipped, or otherwise damaged facing units shall be rejected and shall be replaced with undamaged units.

Masonry units shall be stored on pallets and shall be protected against contamination and staining. Masonry units shall be kept covered and dry at all times. Lime and cement shall be stored under cover in a dry place.

Sand shall be stored so that the inclusion of foreign materials is prevented. Whenever sand is piled directly on the ground, the surface beneath the sand shall be smooth, well drained, and free from dust, mud, and debris. The bottom 6 inches of each pile of sand placed directly on the ground shall not be used in mortar.

PART 2 - MATERIALS

2.01 GENERAL
Masonry unit sizes are indicated in inches. Sizes of masonry units are nominal, the actual size being slightly smaller to allow for mortar joints. All materials shall meet the UBC (Chapter 21) requirements.

2.02 HOLLOW CONCRETE BLOCK
ASTM C90, Type 1, Grade N and conform to UBC (Chapter 21) requirements for hollow load-bearing concrete masonry units. Dimensions as indicated on the Drawings. Special shapes and proper sizes shall be used to provide for all window and door openings, bond beams, piers, lintels, and other special applications with a minimum of block cutting. Concrete masonry units, as indicated on the Drawings, shall be as manufactured by Calstone Company, Best's Blocks Inc., Superlite Builders Supply Company, or approved equal. Lightweight aggregate conforming to ASTM C331; moisture-controlled for linear shrinkage of 0.065 of 1-percent from saturated to oven dry condition when tested in accordance with ASTM C426.

2.03 SAND
Sand shall conform to ASTM C144 and shall be natural sand; 95-percent passing No. 50 sieve, for pointing mortar.

2.04 FINE AGGREGATE
Fine aggregate shall conform to ASTM C404, fine aggregate for grout.

2.05 COARSE AGGREGATE (PEA GRAVEL)
Coarse aggregate shall conform to ASTM C33, coarse aggregate, for grout, no more than 5-percent passing the No. 8 sieve and 100-percent passing the 3/8-inch sieve.

2.06 PORTLAND CEMENT
Portland Cement shall conform to ASTM C150, Type 1.

2.07 HYDRATED LIME
Hydrated Lime shall conform to ASTM C207, Type S.

2.08 QUICKLIME
Quicklime shall conform to ASTM C5, pulverized.

2.09 LIME PUTTY
Lime putty shall be Quicklime, thoroughly slaked and stored for one day; kept moist until used.

2.10 INTEGRAL WATERPROOFING
Integral waterproofing shall be aluminum stearate, ammonium stearate, or calcium stearate, 2-percent of weight of cement; A. C. Horn "Hydratite", Master Builders "Omicron Mortarproofing", Sika "Red Label", Sonneborn "Hydrocide", or equal.

2.11 WATER
Water shall be clean and free from deleterious substances.

2.12 REINFORCING STEEL
Reinforcing steel shall conform to ASTM A615, Grade 40 for No. 5 and smaller and Grade 60 for No. 6 and larger.

2.13 POLYETHYLENE FILM
Polyethylene Film shall conform to product standard PS17; 6 mils.

2.14 WATER-RESISTANT PAPER
Water-resistant paper shall be Fortifiber Corporation, "Sisalkraft" reinforced building construction paper or equal.

2.15 MASONRY MORTAR
Masonry mortar shall conform to ASTM C270, except as modified herein and shall be Type "M" or "S". Mortar shall be machine mixed on the job site for 3 to 5-minutes and shall be used within 90-minutes after mixing. Mortar left on hand when work is stopped shall be discarded. No remixing of mortar more than 90-minutes old with additional water, cement, or other materials shall be permitted.

No mixing off the job site, either complete or in part, will be allowed except for the lime putty which may be mixed off the job site.

Integral waterproofing shall be added to each mortar mix. Mortar shall be colored as selected by Owner. Mortar shall develop a 28-day compressive strength of not less than 2,000 pounds per square inch.

2.16 CONCRETE GROUT
Concrete grout for grouting reinforced masonry shall meet the requirements of ASTM C476.

Only enough water shall be added to the mixture to produce a mixture which is flowable, but which will not show an excess of water when placed. Unless otherwise specified, grout shall have a slump ranging from 4 to 5-inches. Unless otherwise acceptable to the Engineer, grout shall be placed in lifts not exceeding 5-feet in height. All cells shall be filled solidly with grout and vibrated during placement to assure a dense and homogeneous set.

Between grout pours, a horizontal construction joint shall be formed by stopping the placement of grout a minimum of 1-1/2 inches below a mortar joint. Where bond beams occur, the grout pour shall be stopped a minimum of ½" below the top of the masonry.

Vertical cells to be filled with grout shall have vertical alignment sufficient to maintain a clear, unobstructed continuous vertical cell measuring not less than 2-inches by 3-inches. The grout in the cells shall have full contact with the concrete foundation. Mortar, mortar droppings, or other materials that may prevent the grout from bonding directly to the concrete foundation shall be removed before the grouting operation begins. After grout has been placed, it shall be consolidated twice by use of a mechanical immersion vibrator designed for this purpose to the full depth of the grout. The first consolidation shall occur immediately after the cell has been fully grouted, the second consolidation shall occur a minimum of 30 minutes after the first consolidation.

Vertical reinforcement shall be continuous without splice from foundation to top course and held in position using wire bar positioners at top and bottom, courses of wall and at the top course of the first grout pour. At no time shall a bar exceed 200-diameters or 10-feet without positioning hardware. Unless otherwise indicated in the construction documents, bars shall be held in position in the center of the cell.

Horizontal reinforcing bars shall be spliced 24" minimum and adjacent splices occurring in same bond beam course shall be offset 36" min. Reinforcing bars shall be in place and approved by the Engineer of record before grouting shall begin.

Grout shall attain a minimum compressive strength at 28-days of 2,000 psi. Tests to verify compressive strength of grout in accordance with the UBC Standard No. 24-28 shall be performed by an independent testing laboratory approved by the Engineer of Record, at the Owner's expense.

PART 3 - EXECUTION

3.01 MORTAR JOINTS

Masonry shall be laid in straight, level, uniform courses with mortar joints of uniform width. Joint thickness shall be 3/8-inch with a variance of not more than 1/8-inch for both vertical and horizontal joints unless otherwise indicated on the Drawings.

In laying up concrete block masonry, abutting surfaces of head joints shall be completely and solidly cemented together with mortar. All hollow masonry units with horizontal cells, starter courses with vertical cells, and all units in masonry pilasters shall be laid on a full bed of mortar.

The filling of masonry joints shall mean that the entire space between abutting surfaces of units is full, and that the body of the mortar is forced against and into the porous surface of each unit.

All exposed interior mortar joints shall be tooled to a smooth uniform surface and finished free from voids, using a rounded tool. Mortar joints specified to be caulked shall be raked to a depth of ½-inch. Tooling of joints shall be regulated so that the mortar for each wall space has a uniform appearance.

3.02 BONDING AND REINFORCING

Except where otherwise indicated on the Drawings, all masonry walls shall be laid in running bond. All masonry shall be grouted solid and shall be reinforced and anchored in the manner indicated on the Drawings and specified herein.

3.03 BOND BEAMS

Bond beams shall be made up of special bond-beam block for accommodation of horizontal bar reinforcement. Horizontal bar reinforcement shall be solidly grouted in place.

3.04 LAYING MASONRY UNITS

All masonry units shall be free from dust, dirt, and surface moisture when laid. All masonry shall be laid to a line. Walls shall be plumb and straight and in level courses. At no time shall masonry construction at any point be more than 8-feet above adjacent work. When work is suspended, the tops of exterior masonry walls shall be covered and protected from the weather. Care shall be taken in corner construction and at jambs to maintain uniformity of appearance and to ensure that only whole, undamaged units are used.

3.05 CONTROL JOINTS

Control joints shall be full height and continuous in appearance. Bond beams and bond beam reinforcing bars shall be continuous through the control joint. The control joint shall be caulked and shall be mortar joint in appearance. Fill material for control joints shall be premolded, wide flange control joint filler as specified. Caulking shall also be as specified elsewhere herein. All joints shall be caulked to produce a weather tight structure. Unless noted in the construction documents, control joints shall be placed at horizontal intervals not exceeding 1-1/2 wall height.

3.06 COLD WEATHER CONSTRUCTION

Cold weather construction provisions of ACI530.1/ASCE 6/TMS 602, Article 1.8C, shall be implemented when the ambient temperature is below 40-degrees F.

3.07 HOT WEATHER CONSTRUCTION

Hot weather construction provisions of ACI530.1/ASCE 6/TMS 602, Article 1.8D, shall be implemented when the ambient temperature exceeds 100 deg. F, or when the ambient temperature exceeds 90 deg. F with a wind velocity greater than 8 mph.

3.08 CUTTING OF MASONRY UNITS

Concrete masonry units shall be cut as required to form chases, for anchorage, or for other appurtenances. All cutting and fitting of exposed block units shall be done with a power driven carborundum or diamond disc blade saw.

3.09 OPENINGS AND LINTELS

Openings in masonry walls, unless indicated on the Drawings or specified otherwise, shall have lintels made up of like units (bond beam units) reinforced and filled solidly with grout to properly span the opening.

Solid bottom bond beam block shall be used where the underside of lintel is exposed. Contractor shall provide a minimum of 8-inches bearing at each end of lintel. Unless noted in the construction documents, a minimum of 2 no. 4 reinforcing bars shall be placed in the bond beam blocks immediately above the opening and extend not less than 24-inches nor less than 40-bar diameters into the wall past the edge of the opening on each side. At corners, Contractor shall provide a 90-degree bend with an equivalent total embedment.

3.10 FINISH POINTING

On completion of the work, all exposed masonry shall be pointed where necessary and all voids and holes in the mortar filled to match adjacent joint surfaces. Defective joints shall be cut out and repointed with mortar. Care shall be taken to produce a uniform overall appearance. Spottiness due to variation either in materials or workmanship will not be acceptable.

3.11 PROTECTION FROM DAMAGE

Where concrete is placed on top of previously constructed masonry, the masonry shall be protected from concrete splashing, spilling, and water penetration by polyethylene film or Sisalkraft paper placed on top of the masonry and extended down each side of the wall as required for adequate protection. The protective covering shall be neatly trimmed away at face of wall after form removal.

3.12 ANCHOR BOLTS

Anchor bolts shall be placed according to the construction documents. Anchor bolts shall be securely held in place by a template to assure precise alignment during grouting. Cutting or reaming of members being anchored or other means of accommodating misaligned anchor bolts shall not be accepted.

3.13 CLEANING

Following finish pointing, all exposed masonry surfaces shall be carefully cleaned and all surface stains removed. Mortar smears or droppings on concrete blocks shall be removed with a steel trowel. Removal shall not be attempted until the smears or droppings have hardened to the extent necessary to prevent additional smearing of the surface during removal. Mortar remaining after removal with the trowel shall be removed as much as possible by rubbing with a small piece of block. All surfaces shall then be thoroughly brushed.

3.14 ENCLOSURES

Where concrete masonry is to enclose conduits, pipes, stacks, ducts, and similar items, chases, cavities, and similar spaces shall be constructed as required, whether indicated on the Drawings or not. Openings around flush mounted electrical outlet boxes, including the flush joint above the box, shall be pointed with mortar. No such work shall be covered until advised by the Engineer that the work has been inspected and tested.

3.15 PATCHING

Patching of exposed concrete masonry units shall be done at the conclusion of the general work and shall be done so the patching will be indistinguishable from similar surroundings or adjoining work.

PART 4 - MEASUREMENT AND PAYMENT

No separate payment will be made for Concrete Masonry. Payment for work in this Section shall be included as part of the applicable Lump Sum or Unit Prices stated in other Sections.

-END OF SECTION-

SECTION 05500 - METAL FABRICATIONS

PART 1 - GENERAL

1.01 SCOPE

This Section covers the work necessary to furnish and install metal fabrications, complete. See Section 09900-PAINTING for additional requirements.

1.02 SUBMITTALS

A. Shop Drawings

Submit shop Drawings prepared under supervision of a registered professional engineer, including complete details and schedules for fabrication and assembly of structural steel members, metal fabrications, procedures and diagrams.

1. For structural steel member, include details of cuts, connections, camber, holes, and other pertinent data. Indicate welds by standard AWS A2.1 and A2.4 symbols, and show size, length, and type of each weld.

2. Provide setting Drawings, templates, and directions for installation of anchor bolts and other anchorages to be installed as work of other sections.

3. Submit shop drawings and details of metal fabrications which show profiles, sizes, connection attachments, reinforcing, anchorage, size and type of fasteners, and accessories. Include erection drawings, elevations, and details where applicable. Indicate welded connections using standard AWS A2.0 welding symbols. Indicate net weld lengths.

B. Test Reports

Submit copies of reports of tests conducted on shop and field bolted and welded connections. Include data on type(s) of tests conducted and test results.

1.03 QUALIFICATIONS FOR WELDING

Qualified welding processes and welding operators in accordance with AWS "Standard Qualification Procedure."

A. Submit certifications that welders to be employed in work have satisfactorily passed AWS qualification tests within the previous 12-months.

B. If recertification of welders is required, retesting will be the Contractor's responsibility.

1.04 DELIVERY, STORAGE AND HANDLING

Deliver materials to site at such intervals to insure uninterrupted progress of work. Deliver anchor bolts and anchorage devices, which are to be embedded in cast-in-place concrete or masonry, in ample time to not delay work. Store materials to permit easy access for inspection and identification. Keep steel members off ground, using pallets, platforms, or other supports. Protect steel members and packaged materials from erosion and deterioration. Do not store materials on structure in a manner that might cause distortion or damage to members or supporting structures as directed.

PART 2 – MATERIALS

2.01 METAL SURFACES, GENERAL

For fabrication of work which will be exposed to view, use only materials which are smooth and free of surface blemishes including pitting, rust and scale seam marks, roller marks, rolled trade names and roughness. Remove such blemishes by grinding, or by welding and grinding, prior to cleaning, treating and application of surface finishes.

2.02 STEEL SECTIONS

Steel sections shall conform to ASTM A36.

2.03 STEEL TUBING

Steel tubing shall conform to ASTM A500, Grade B.

2.04 STEEL PIPE

Steel pipe shall conform to ASTM A 53, Grade B.

2.05 BOLTS, NUTS, AND WASHERS

Bolts, nuts, and washers shall conform to ASTM A307 and shall be galvanized in accordance with ASTM A153 for galvanized components unless noted otherwise in the construction documents.

2.06 WELDING MATERIALS

Welding materials shall conform with AWS D1.1 and shall be the type required for materials being welded.

2.07 HEADED STUD-TYPE SHEAR CONNECTORS

Headed stud-type shear connectors shall conform to ASTM A 108 and shall be Grade 1015 or 1020, cold finished carbon steel; with dimensions complying with AISC Specifications.

2.08 ANCHOR BOLTS

Anchor bolts shall conform to ASTM A307 and shall be nonheaded type unless otherwise indicated.

2.09 UNFINISHED THREADED FASTENERS
Unfinished threaded fasteners shall conform to ASTM A307 and shall be Grade A, regular low-carbon steel bolts and nuts. Provide hexagonal heads and nuts for all connections.

2.10 HIGH-STRENGTH THREADED FASTENERS
High strength structural bolts, heavy hexagon nuts, and hardened washers shall be quenched and tempered, medium-carbon steel bolts, nuts and washers, complying with ASTM A325.

2.11 SHOP AND TOUCH-UP PRIMER
Shop and touch-up primer shall conform to SSPC 15, Type 1, red oxide, and Section 09900-PAINTING.

2.12 TOUCH-UP PRIMER FOR GALVANIZED SURFACES
Touch-up primer for galvanized surfaces shall conform to Section 09900-PAINTING.

PART 3 - EXECUTION

3.01 FABRICATION
Fit and shop assemble fabrications in largest practical sections, for delivery to site. Fabricate items with joints tightly fitted and secured. Properly mark and match-mark materials for field assembly. Fabricate for delivery sequence which will expedite erection and minimize field handling of materials. Continuously seal joined members by continuous welds. Grind exposed joints flush and smooth with adjacent finish surface. Make exposed joints butt tight, flush, and hairline. Ease exposed edges to small uniform radius. Supply components required for anchorage of fabrications. Fabricate anchors and related components of same material and finish as fabrication, except where specifically noted otherwise. On all exposed mechanical fastenings flush countersink screws or bolts; unobtrusively located; consistent with design of component, except where specifically noted otherwise.

3.02 EXAMINATION
Verify that field conditions are acceptable and are ready to receive work. Beginning of installation means erector accepts existing conditions.

3.03 PREPARATION
Clean and strip primed steel items to bare metal where site welding is required. Supply items required to be cast into concrete with setting templates, to appropriate sections.

3.04 FINISHES
Finishes shall conform to Section 09900-PAINTING and the following:

A. Prepare surfaces to be primed in accordance with SSPC SP 2.

B. Clean surfaces of rust, scale, grease, and foreign matter prior to finishing.

C. Do not prime surfaces in direct contact with concrete or where field welding is

required.

D. Items to be painted shall be primed with two coats.

E. Galvanize in accordance with ASTM A123, structural steel members. Provide minimum 1.25 oz/sq ft galvanized coating.

3.05 INSTALLATION

A. Install items plumb and level, accurately fitted, free from distortion or defects.

B. Allow for erection loads, and for sufficient temporary bracing to maintain true alignment until completion of erection and installation of permanent attachments.

C. Field weld components indicated on Drawings.

D. Perform field welding in accordance with AWS D1.1.

E. Obtain approval of the Engineer prior to site cutting or making adjustments not scheduled.

F. After erection, prime welds, abrasions, and surfaces not shop primed, except surfaces to be in contact with concrete.

3.06 SETTING BASES AND BEARING PLATES

Clean concrete and masonry bearing surfaces of bond-reducing materials and roughen to improve bond to surfaces. Clean bottom surface of base and bearing plates.

A. Set loose and attach base plates and bearing plates for structural members on wedges or other adjusting devices.

B. Tighten anchor bolts after supported members have been positioned and plumbed. Do not remove wedges or shims, but if protruding, cut off flush with edge of base or bearing plate prior to packing with grout.

C. Pack grout solidly between bearing surfaces and bases or plates to ensure that no voids remain. Finish exposed surfaces, protect installed materials, and allow to cure.

D. Comply with manufacturer's installation instructions for grouting.

3.07 ERECTION TOLERANCES

Maximum variation from plumb shall not exceed 1/4-inch. Maximum offset from true alignment shall not exceed 1/4-inch.

3.08 DEFICIENCY CORRECTION

Correct deficiencies in steel work which inspections have indicated to be not in compliance with requirements. Perform additional tests, at Contractor's expense, as may be necessary to reconfirm any non-compliance of original work, and as may be necessary to show compliance of corrected work.

PART 4 - MEASUREMENT AND PAYMENT

No separate payment will be made for Metal Fabrications. Payment for work in this Section shall be included as part of the applicable Lump Sum or Unit Prices stated in other Sections.

-END OF SECTION-

SECTION 06100 - ROUGH CARPENTRY

PART 1 - GENERAL

1.01 SCOPE
This Section covers the work necessary to furnish and install rough carpentry, including wood platform framing, plywood, sleepers, nailers, blocking, screeds, grounds, rough bucks, ledgers as required, rough hardware and fasteners, complete.

1.02 REFERENCE SPECIFICATIONS
Lumber, unless otherwise noted, shall be legible trade and grade marked, well seasoned S4S, coast region Douglas Fir, conforming to the applicable pattern, sizes and grades in the Standard Grading and Dressing Rules No. 16 of the West Coast Lumber Inspection Bureau. Plywood, unless otherwise noted shall be identified with the DFPA grade trademark of the American Plywood Association and shall meet the requirements of the U.S. Product Standard PS 1 or PS 2.

PART 2 - MATERIALS

2.01 LUMBER

A. Framing Lumber Grades
Douglas Fir Larch North (DF) unless otherwise noted. Lumber designated DF South by WWPA is not acceptable. All lumber shall be new with no reuse except as permitted by Engineer. Moisture content for lumber 2-inches and less in thickness shall average 19-percent or less at time of installation. All 2-inch nominal lumber shall be not less than 1 1/2-inch thick.

B. General Framing Lumber
General framing lumber shall be No. 2 (DF) 2-inch x 4-inch nominal studs. Light framing: WCLB Paragraph 124b.

C. 2x6 Studs, Joists
No. 2 (DF) 2-inch x 6-inch nominal studs, joists, planks: WCLB Paragraph 123b.

2.02 PLYWOOD
Roof structural sheathing shall be Structural 1 rated exterior glue conforming to U.S. Products Standard PS 1-83 or C-D Interior with exterior glue in conformance with PS 1-74. Thickness and type as indicated on the Drawings.

2.03 PRESSURE-TREATED LUMBER
Koppers WOLMANIZED LUMBER or Osmose K-33 PRESSURE PRESERVED WOOD conforming to American Wood Preservers Bureau Standard LP-2 for normal exposure and FDN for foundation material in the ground.

2.04 ROUGH HARDWARE

Furnish all items of rough hardware, connections to metal studs, bolts, etc., required to complete the work. Bolts, nuts and washers shall be hot-dipped galvanized, conforming to ASTM A-153. Washers shall be malleable iron. Hardware for attaching blocking to metal studs shall also be galvanized.

A. Nails

Common wire nails or spikes conforming to UBC Table 2304.9.1 and Federal Specification FF-N-101. Use galvanized nails for all exposed framing.

B. Bolts

Standard mild steel, hexagonal head machine bolts with matching nuts and malleable iron or steel plate washers.

C. Lag Bolts and Screws

Conform to Federal Specification FF-B-561B, of sizes shown or noted on Drawings.

D. Toggle Bolts

Galvanized conforming to Federal Specification FF-B-588B (2), of sizes shown or noted on Drawings.

E. Concrete Anchors

Anchors shall be Wedge type concrete anchors with sizes as noted on the Drawings. Do not use expansion bolts or anchors where other type anchors are shown or noted on the Drawings.

F. Power-Driven Fasteners

Power-Driven fasteners shall not be used except with prior acceptance from the Engineer in writing.

G. Framing Anchors

Timber Fasteners, Inc., Universal Anchors Co., Simpson Company, or equivalent, galvanized framing connectors and joist hangers as detailed, not less than 26-gauge (USS) before galvanizing having minimum design and load capacity equal to the Simpson Company product noted on Drawings.

2.05 BUILDING PAPER

Building paper shall conform to "Federal Specification UU B 790a," dated February 5, 1968.

2.06 WOOD PRESERVATIVE

Wood preservative shall conform to "Standard P 5," of the American Wood Preservers Institute, or as noted on the Drawings.

PART 3 - EXECUTION

3.01 GENERAL
Grade mark and mill identification of association having jurisdiction shall appear, distinctly legible, on each piece of lumber and plywood. Install all wood framing, making proper provisions for work of other trades. Do all cutting of wood required to accommodate placing heating and ventilating, electrical, and other trades. Fit neatly around all exposed items, such as outlet boxes, conduit, pipes and ducts.

3.02 PRODUCT HANDLING
Store and handle materials in a manner to prevent deterioration, intrusion of foreign matter, or damage and immediately remove from premises any materials evidencing such and replace with new material.

3.03 STORAGE OF MATERIALS
Carefully pile lumber off the ground in a manner to insure proper drainage, ventilation, and protection from weather. Store plywood and materials under cover.

3.04 LAYING OUT WORK
Before commencing work, check all lines and levels indicated and such other work as has been completed. Should there be any discrepancies, report same in writing to the Engineer for correction or adjustment. In event of failure to do so, Contractor shall be responsible for correction of any errors.

3.05 ITEMS BUILT INTO CONCRETE
Furnish anchor bolts as indicated in the construction documents or otherwise required to attach wood plates, nailers and ledgers to concrete. Bolts to be ½-inch minimum diameter, threaded one end with 1-½ inch right angle bend opposite end. See Drawings for exact size and embedment. Deliver anchors bolts to the site promptly to be built in as work progresses.

3.06 WORKMANSHIP
Work shall be accurately constructed square, true, to required levels and lines, and adequately fastened and anchored to produce sturdy, rigid system of sufficient strength to support the loads.

3.07 PRESSURE-TREATED LUMBER
Lumber to be in contact with ground concrete shall be pressure-treated lumber as specified herein. Lumber shall be fabricated insofar as possible before treatment. Where lumber is cut after treating, brush the surface with two coats of preservative. Lumber shall be dried to moisture content of not more than 19-percent after treatment.

3.08 SILLS
Bed in wet concrete to obtain a continuous bearing. Size all plates or sills and set level and true to line. Bolt down with bolts of size, length, and spacing indicated with a bolt not more than 9-inches from the end of any piece.

3.09 PLATES
Plates for partitions and walls shall be single at bottom and double at top, except as otherwise detailed. Splices in top plates shall be staggered not less than 48-inches unless noted otherwise on Drawings. Where plates are cut for passing pipes and similar items, they shall be reinforced on both sides with 1/8 x 3 x 18 inch steel plates punched for 10d nails approximately 3-inches on center, staggered.

3.10 POWER DRIVEN FASTENERS
Where power driven anchors are acceptable for use, plates anchored to concrete floor shall be attached with pins not over 2-feet on center. All vertical furring shall be attached to concrete with pins not over 4-feet on center. Each pin shall penetrate the concrete to a minimum of 1 ½-inches. Use washers with all pins. There shall be a minimum of 2 anchors for each member.

3.11 STUDDING
Furnish and set all columns and studding of size, center, and locations indicated on Drawings. Unless noted otherwise, studding for furring and partitions shall be 2 x 4-inches set 16-inches on-center. Plates on concrete floors shall be attached to the slab by anchor bolts or power driven fasteners where acceptable. Cripples shall run to the floor plates. Studs against concrete shall be anchored as described above. Studding over 8-feet tall shall be bridged at half height with herringbone bridging, double-nailed at each end.

3.12 JOISTS

A. Joists shall be set with crowning edge up. Where openings occur headers and supporting joists shall be doubled or tripled, provided as the case may be, and header and tail joists shall be hung on metal hangers. Joists abutting concrete shall be anchored as indicated on Drawings.

B. Solid blocking shall be at ends and over supports. Cross-bridging or solid blocking in spans shall be at midspan or as shown on Drawings.

C. Include furring or stripping, properly shimmed and leveled, where shown or required for ceiling finishes.

3.13 FURRING, BLOCKING AND BACKING
Furring, blocking and backing shall be furnished and installed where required for reception of wallboard, formation of architectural features, concealment of pipes, conduits, ducts, attachment of supports for toilet room accessories, building specialties, and other fixtures. Contractor shall consult with the trades concerned and set furring and blocking they require. Include fire-

retardant treated wood blocking for plaster and drywall partitions and walls where shown or required.

3.14 GROUND AND NAILING STRIPS
Dressed wood ground shall be furnished and installed as indicated or required for the attachment of finish materials to wood, concrete, masonry or other surfaces.

3.15 FRAMING OF OPENINGS
Openings shall be provided for mechanical and electrical equipment, ducts, etc. Where one or more joists are cut, the joists supporting the trimmers shall be double and well spiked unless otherwise shown on Drawings. Where continuation of three or more joists is interrupted, the abutting headers and joist hangers shall be as shown on the Drawings.

3.16 FIRE BLOCKING
Fire blocking shall be installed where required by the Uniform Building Code or other applicable code.

3.17 FRAMES FOR CABINETS
Frame all openings in walls required for the installation of cabinets and other items, including telephone and electrical terminals.

3.18 PLYWOOD SHEATHING
Install plywood with long dimension perpendicular to supports, studs, or joists. Install all roof sheathing as shown on Drawings. Sheathing shall have solid bearing under all edges and sheets shall be laid up with tight joint. Check sheathing on horizontal surfaces carefully as soon as it is laid to determine its adequacy to support workmen and the normal loads, which it will receive. Protect sheathing from weather until siding or roofing is installed by applying building paper or polyethylene sheeting. Where underside of sheathing is to be left exposed, apply plywood with best face down.

3.19 LUMBER FASTENINGS
Nailing and bolting of wood members shall conform to the minimum requirements of the latest edition of the Uniform Building Code, and as specified herein and shown on the Drawings.

A. Bolting
All bolted connections shall be retightened before final acceptance or, in the case of bolted connections in concealed locations, immediately before the area is sealed off.

B. Nailing
Conform to the nailing schedule on the Drawings. Connectors shall be as called for on the Drawings, all fabricated by an accepted manufacturer's published instruction. Nails shall be untreated steel for interior work on concealed framing, and galvanized for all exposed work on exterior. Unless connectors are detailed or steel connectors indicated, nails shall not be driven closer together than 1/2 of their length nor closer to the edge of a member than 1/4 their length. When wood tends to split with size of

nail used, pre-drill holes for nails. Penetration of nails or spikes into pieces shall not be less than one-half the length of the nail or spike.

C. Washers

Provide all bolts and lag screws bearing on wood with washers of sizes indicated under heads and nuts, except that cut washers shall be used where shown on the structural Drawings.

D. Framing Anchors, Connectors, and Hangers

See Drawings for required sizes and types.

3.20 ROUGH HARDWARE

Furnish and install all stock items of rough hardware as indicated or required, including clips, anchors, hangers, bolts, ties, and plates for connecting wood framing members to wood, concrete, masonry, or steel, except as specified to be provided under other sections.

Expansion bolts at locations indicated on Drawings shall be carefully installed in snug fitting smoothly drilled holes, all in accordance with the manufacturer's written instructions. Expansion bolts shall be installed so that the load acts on the bolts in shear rather than withdrawal. Expansion bolts shall be carefully located in order to eliminate the risk of damage to concrete, steel reinforcement, and other embedded items. Expansion bolts shall not be used except where first accepted by the Engineer in writing.

3.21 REMOVAL OF EXCESS MATERIAL

Remove excess debris as it accumulates. Do not store or permit debris to accumulate on the site. If Contractor fails to remove excess debris promptly, Engineer reserves right to remove debris at Contractor’s expense. Burning will not be allowed.

3.22 CLEANING UP

Upon completion of Work remove materials, equipment, apparatus, tools and the like and leave premises clean, neat and orderly.

PART 4 - MEASUREMENT AND PAYMENT

No separate payment will be made for Rough Carpentry. Payment for work in this Section shall be included as part of the applicable Lump Sum or unit prices stated in other Sections.

-END OF SECTION-

SECTION 06170 - PREFABRICATED WOOD TRUSSES

PART 1 - GENERAL

1.01 SCOPE

This Section covers the work necessary to furnish and install prefabricated wood roof trusses, including connectors, complete, See Section 06100-ROUGH CARPENTRY for additional requirements.

1.02 QUALITY ASSURANCE

A. Acceptable Manufacturers

Prefabricated wood trusses shall be "Gang-Nail" wood trusses as designed by Automated Building Components, Inc. and fabricated by Truscom Roof and Floor Systems, North Highlands, California. Other designers/fabricators with products equal to these standards in all respects may be used.

B. Installers Qualifications

Installation shall be by manufacturer's authorized representative who is normally engaged in this business, employing skilled mechanics thoroughly trained and experienced in the type of installation required, and are completely familiar with the requirements of the work specified herein.

C. Reference Specifications

The design and fabrication criteria of all wood trusses shall meet with the "National Design Specifications for Stress-Grade Lumber and Its Fastenings" by National Forest Products Association (latest revision); "Timber Construction Standards" by American Institute of Timber Construction (latest revision); and "Design Specifications for Light Metal Plate Connected Wood Trusses" by Truss Plate Institute (latest revision), the same as if those specifications and all their references were set out in full herein.

D. Professional Engineer

All truss designs shall bear the name and seal and/or registration number of a registered Civil or Structural Engineer licensed in the State of California.

1.03 SUBMITTALS

A. Engineering Drawings and Shop Drawings

Submit the truss design and/or shop drawings for approval prior to the fabrication of any components. Truss designs shall contain the following information:

1. Pitch, span, dimensions and spacing of truss.

2. Truss bearing sizes and locations.
3. Design loading of truss and allowable stress increase.
4. Axial forces in each truss member.
5. Nominal sizes and location of connector plates at all joints.
6. Size, species and stress of grade of lumber for all truss members.
7. Camber.
8. Permanent lateral bracing as required by design to reduce buckling length of individual members only.
9. Handling and erection recommendations.

B. Fabricator's Certification

Contractor shall submit fabricator's certification that the products are precision fabricated to the specified design fabrication standards.

1.04 PRODUCT DELIVERY, STORAGE AND HANDLING

Fabricated trusses and subcomponents shall be so handled and stored that they are not subject to damage. If the trusses are to be stockpiled prior to erection, sufficient bearing points and/or bracing shall be provided to prevent excessive lateral bending or tipping over. All damaged trusses, which cannot be satisfactorily repaired to the satisfaction of the Engineer, shall be replaced at no additional cost to the Owner.

PART 2 - MATERIALS

2.01 MATERIALS

A. Lumber

All lumber used for truss members shall conform to the published stress ratings for the species and grades as set out in the official grading rules of the appropriate lumber association or as listed in the reference specifications, except wherever this specification, or notes on the Drawings or truss engineering design calls for lumber which exceeds the minimum set forth in the reference specification.

1. At the time of fabrication, the moisture content of all lumber shall be within proper limits, as stated in the reference specifications.

2. All lumber shall conform to the species and fully recognized nominal sizes shown on the Drawings or truss engineering designs. All members shall be cut from lumber bearing the proper grade-mark stamps of a recognized grading association or licensed lumber inspection agency. No lumber shall be used which does not appear to conform to proper dimensions and/or grades.

B. Truss Connector Plates

All truss connector plates shall be manufactured from ASTM A446, Grade A prime commercial quality galvanized sheer steel or no less than 20 gauge thickness which has a

minimum yield of 33,000 psi and a minimum ultimate tensile strength of 45,000 psi. The corrosion resistant coating shall be ASTM A 525, "Specification for Steel Sheet, Zinc-Coated (Galvanized) by the Hot-Dip Process, General Requirements", Coating Designation G90 or G60, or ASTM A591,, "Standard Specifications for Electrolytic Zinc Coated Steel Sheets", Coating Class C, or such treatment as will give equivalent corrosion protection. This protective coating may be applied to the sheet steel before the connector plates are stamped out; it is not necessary to recoat the connectors after the stamping operation. All metal connectors shall be Gang-Nail Connectors and shall be marked "Gang-Nail". Connectors shall have a series of nail-like projections that are designed to separate the fibers of the wood into which they are pressed, in accordance with accepted nailing practices. All connector plated truss joints shall be designed using the plating method as set forth in TPI Standards. Where field assembly of truss subcomponents is necessary, the connections shall be in accordance with the details shown on the truss design drawings and approved by a Professional Engineer.

2.02 FABRICATION

A. All trusses and other roof structural components shall be fabricated in a properly equipped manufacturing facility of a permanent nature. They shall be manufactured by experienced workmen, using precision cutting and truss fabricating equipment, under the direct supervision of a qualified foreman. All trusses shall be fabricated under strict rules of inspection and quality control as the local code may require, open to the inspection of the Engineer or their representative at all times.

B. All truss members shall be accurately cut to length, angle and be true to line to assure tight joints for finished truss.

C. All truss members and connector plates shall be properly placed in special jigs and the members tightly clamped in place, remaining in that position until connector plates have been pressed into the lumber simultaneously on both sides of the joints.

D. Camber shall be built into the trusses, as noted on the engineering truss designs, by properly positioning the members into the fabricating jig.

E. Each truss shall be stamped with the name and address of the Gang-Nail Truss manufacturer.

PART 3 - EXECUTION

3.01 INSPECTION

Verify that framing to receive trusses is constructed true, free of irregularities and debris. Do not proceed with installation until unsatisfactory conditions are corrected.

3.02 ERECTION

A. Framing anchors and/or truss hangers shall be provided by the Contractor in accordance with the Drawings.
B. Field erection of the trusses, including items such as proper handling, safety precautions, temporary bracing to prevent toppling or dominoing of the trusses during erection, and any other safeguards or procedures consistent with good workmanship and good building practices, shall be the responsibility of the Contractor.

C. During the entire construction period, the contractor shall provide means for adequate distribution of concentrated loads so that the carrying capacity of any one truss and/or other component is not exceeded.

D. Proper erection bracing shall be installed to hold the trusses true and plumb and in a safe condition until permanent truss bracing and bridging can be solidly nailed in place to form a structurally sound roof framing system. All erection and permanent bracing shall be installed and all components permanently fastened before the application of any loads.

E. The permanent structural cross-bracing to ensure the overall rigidity of the roof system, shall be in accordance with the Drawings.

PART 4 - MEASUREMENT AND PAYMENT

No separate payment will be made for Prefabricated Wood Trusses. Payment for work in this Section shall be included as part of the applicable Lump Sum or Unit Prices stated in other Sections.

-END OF SECTION-

SECTION 06600 – FIBERGLASS GRATING

PART 1 - GENERAL

1.01 SCOPE
This Section covers the work necessary to furnish and install fiberglass grating and associated appurtenances, complete.

1.02 SUBMITTALS
Contractor shall submit shop drawings, specifications and data for the fiberglass grating and support systems and all material to be supplied. Submittal information shall include the grate thickness, mesh size, resin system, loading and deflection data, and data showing conformance with applicable ASTM specifications.

PART 2 - MATERIALS

2.01 MOLDED GRATING
Molded fiberglass grating shall be made in one-piece construction by interweaving continuous thoroughly wetted fiberglass strand with a corrosion resistant Vinyl Ester resin system with ultraviolet (UV) inhibitors. Grating shall be a minimum of 2-inches thick and 2-inches square mesh designed to support a minimum of 200-pounds per square foot uniform load with deflection not to exceed 0.250 inches, and shall be the manufacturers standard color. Surface shall be concave top. Grating shall be McNichols Fibergrate, Strongwell Duragrate, Gridwalk High Strength Molded Grating, or approved equal.

2.02 FASTENERS
All fasteners including clips, bolts, nuts and washers shall be type 316 stainless steel grating clips.

2.03 GRATING SUPPORTS
Grating supports shall be constructed of fiberglass with a corrosion resistant Vinyl Ester resin system conforming to ASTM E-84 Class 1 and ASTM D-635.

PART 3 - EXECUTION

3.01 FIELD FABRICATION
Contractor shall use a heavy-duty rotary saw with either a masonry carbide or diamond coated blade with the panel turned bottom-side up. All cut edges shall be ground smooth using a coarse grit open coated (resin) grinding disk. All cut surfaces shall be coated with a light coating of a two-part resin system or a urethane spray paint to prevent corrosion of glass fibers. Safety precautions shall be taken when cutting fiberglass materials including safety goggles, dust mask, and gloves to protect the eyes, reduce dust inhalation and prevent skin irritation.

3.02 PANEL INSTALLATION

Panels shall be supported on all sides and attached to the supporting framework with hold down clips. A minimum of four clips per side are required for full size panels. Use end panel clips to unite two adjacent panels, where panels cannot be supported on all sides.

PART 4 - MEASUREMENT AND PAYMENT

No separate payment will be made for Fiberglass Units. Payment for work in this Section shall be included as part of the applicable Lump Sum or Unit Prices stated in other Sections.

-END OF SECTION-

SECTION 07410 - PREFORMED RIBBED METAL ROOFING

PART 1 - GENERAL

1.01 SCOPE

This Section covers the work necessary to furnish and install all preformed metal roofing, and all accessories needed to form the roof and make it weather tight as specified and as shown on the Drawings, complete.

1.02 SUBMITTALS

Contractor shall make the following submittals.

A. Samples:

1. Prior to ordering products, submit manufacturer's standard color samples for Owner's selection.

2. Prior to starting work, submit two (2), 12 x 16-inch panel samples showing shape and color for Engineer's and Owner's acceptance.

B. Manufacturer's Installation Instructions

C. Manufacturer's Maintenance Instructions

1.03 QUALITY ASSURANCE

A. Contractor shall have two years or more of successful experience in installation of preformed roof panels similar to requirements for this project.

B. Comply with Building Code Requirements.

C. UL90 Tested and certified system for wind-up lift.

D. Panel (without insulation) shall be tested and in compliance with to meet ASTM E 283-73 for air infiltration.

E. Panel shall be tested and in compliance with ASTM E 331-70 for water penetration.

1.04 WARRANTY

A. Manufacturer's Product Warranty

Warrant for twenty (20) years, following project delivery date, that panels will not rupture, fail structurally, or perforate.

B. Contractor's Warranty

Warrant panels, flashing, sealants, fasteners, and accessories against defective materials and/or workmanship, to remain watertight and weatherproof with normal usage for two (2) years following project substantial completion date, and to repair or replace without additional cost to the Owner, any leaks and resulting damage to other materials and building contents as may occur.

PART 2 - MATERIALS

2.01 APPROVED MANUFACTURER

A. Preformed metal roofing designation and details indicating standards of a particular manufacture shall not be construed to limit competition. Preformed metal roofing panels manufactured by AEP SPAN have been designated. Products of other manufacturers conforming to the Drawings and Specifications shall be subject to the approval of the Engineer.

B. Panel Designation for Roof: Design Span 12-inches, 24-gauge.

C. The pattern, finish and color of the preformed metal roofing shall be selected by the Owner.

2.02 PANELS

A. Base Metal

1. Material: Steel
2. Manufacturing Standard: ASTM A-792, Grade C
3. Minimum Yield Strength: 40,000 psi.
4. Thickness: 24 gauge.
5. Protective Coating: Zincaluma.
6. Protective Coating Components:
    a. Zinc = 45%
    b. Aluminum Allow = 55%
7. Protective Coating Thickness: 1.9 mils.

B. Configuration

1. Pattern: As called out on Drawings.
2. Rib Spacing: 12 inches O.C.
3. Rib Height: 1-3/4 inches.
4. Normal Panel Width: 12 inches.
5. Panel Length: Length to span over three supports whenever possible.

C. Exterior Finish

1. Primer Coat Material: Baked-on Epoxy Primer.

2. Minimum Primer Coat dry film thickness: 0.2 MILS.
3. Finish Coat Material: Baked-on Silicone modified Polyester Enamel.
4. Minimum Finish Coat dry film thickness: 0.8 mils.
5. Minimum total Exterior Coat dry film thickness: 1.0 mils.
6. Color: To be selected by Owner.

D. Interior Finish

1. Primer Coat Material: Baked-on Epoxy Primer.
2. Minimum Primer Coat dry film thickness: 0.15 mils
3. Finish Coat Material: Polyester Paint.
4. Minimum Finish Coat dry film thickness: 0.35 mils.
5. Minimum total Interior Finish dry film thickness: 0.50 mils.
6. Color: Off-White.

2.03 PANEL PENETRATION FLASHING

Panel penetration flashing shall be recommended by Panel Manufacturer. Satisfy conditions of use.

2.04 ALL OTHER FLASHING

Do not use lead or copper.

2.05 FASTENERS

Sheet metal screws with neoprene washer #10 x 5/8" at 12-inches on center.

2.06 END CLOSURES

End closures shall be waterproof, laminated, semi-rigid, cross-linked, polyethylene foam and shall tightly fit panel configurations.

2.07 SEALANT COMPOUND

Sealant compound shall be Norton V730, Geocel Construction 2,000, or approved equal.

2.08 SEALANT TAPE

A. Manufacturer and Brand

Recommended by panel manufacturer.

B. Material

Low-density, Polyvinyl Chloride Foam Sealant.

C. Thickness

5/32-inch.

D. Width

1/4-inch.

E. Adhesive
One-side only.

2.09 FLASHING AND TRIM
Flashing and trim for weathertightness and appearance shall be furnished by the preformed roof panel manufacturer and be of a gauge adequate for installation involved, as detailed on approved shop drawings. Finish shall match that of the roof panel.

2.10 ACCESSORIES
Provide all required accessories for complete, secure, and waterproof installation.

2.11 FABRICATION

A. Unless otherwise shown on Drawings or specified herein, fabricate panels in continuous one-piece lengths and fabricate flashings and accessories in longest practicable lengths.

B. At Roofing Panels upper ends: Turn up at least 1-1/2 inches under flashing.

C. At Roofing Panel lower ends: Turn down at least 1-1/2 inches where exposed.

PART 3 - EXECUTION

3.01 PRODUCT DELIVERY, STORAGE, AND HANDLING

A. Product Delivery

1. Keep panels dry.

B. Product Storage and Handling

1. Protect against damage and discoloration.

2. Handle panels with non-marring slings.

3. Do not bend panels.

4. Store panels above ground, with one end elevated for drainage.

5. Protect panels against standing water and condensation between adjacent surfaces.

6. If panels become wet, immediately separate sheets, wipe dry with clean cloth, and separate sheets for air-drying.

3.02 INSPECTION

A. Existing Conditions

1. Verify that members to receive panels are complete, accurately sized and located, in true plane, secure, and otherwise properly prepared.

2. Prior to starting work, notify Engineer about defects requiring correction.

3. Do not start work if conditions are unsatisfactory.

3.03 PREPARATION

A. Field Measurement

1. Verify prior to fabrication.

2. If field measurements differ slightly from Drawing dimensions, modify work as required for accurate fit. If measurements differ substantially, notify Engineer prior to fabrication.

B. Protection

1. Treat any contacting surfaces of dissimilar materials to prevent electrolytic corrosion.

2. Require workman who will be walking on roofing panels to wear clean, soft-soled shoes that will not pick-up stones or other abrasive material which could damage panel surfaces.

3. Protect work of other trades against damage and discoloration caused by work of this Section.

C. Surface Preparation

1. At structural steel members thicker than 0.2-inches, provide 0.17-inch diameter predrilled pilot holes where necessary to receive fasteners.

2. Clean and dry surfaces prior to applying joint sealant.

3.04 INSTALLATION

A. Panels

1. Follow Manufacturer's directions.

2. Locate fasteners 12-inches on center.

3. Install panel ribs vertically.

4. Lap panel ribs away from prevailing wind direction.

5. Prior to installing panel, apply sealant compound bead or sealant tape on underside of female ribs.

6. Secure panels without warp or defect.

7. Fully engage interlocking ribs.

B. Allowable Erection Tolerance

1. Maximum alignment variation = ¼-inch in 40-feet.

C. Flashing

1. Follow Manufacturer's direction.

2. Overlap panels at least 6-inches.

3. At flashing running perpendicular to panel ribs notch and fold down flashing into space between ribs.

D. Cutting and Fitting

1. Neat, square, and true. Torch-cutting prohibited where cut exposed to final view.

2. Openings 6-inches and larger in any direction: Shop fabricate and reinforce to maintain original load capacity.

3. Openings less than 6-inches in largest dimension: Made by trade requiring opening.

E. Touch-Up

1. Touch-up damaged paint surfaces with same paint used in shop. Apply in accordance with paint manufacturer's direction.

F. Cleaning and Repairing

1. At completion of each day's work and at work completion, sweep panels, flashing and gutters clean. Do not allow fasteners, cuttings, fillings or scraps to accumulate on finish surfaces.

2. Including work of other Sections, clean, repair, and touch-up or replace when directed, products which have been soiled, discolored or damaged by work of this Section.

3. Remove debris from Project Site upon work completion or sooner, if directed.

PART 4 - MEASUREMENT AND PAYMENT

No separate payment will be made for Preformed Ribbed Metal Roofing. Payment for work in this Section shall be including as part of the applicable Lump Sum or unit prices stated in other Sections.

-END OF SECTION-

SECTION 07900 – JOINT SEALANTS

PART 1 – GENERAL

1.01 SCOPE
This Section covers the work necessary to seal all joints that will permit penetration of dust, air, or moisture.

1.02 SUBMITTALS
Submit the following items in accordance with Section - 01330 PROJECT RECORDS AND SUBMITTALS.

A. Manufacturer's installation and surface preparation instructions.

B. Manufacturer's recommendations for joint cleaner, primer, backer rod, tooling and bond breaker.

C. Certification from sealant manufacturer the stated product being used is recommended for and best suited for joint in which it is being applied.

D. Certification stating the proposed materials meet the requirements of the Specification and referenced standards.

E. Indicate where each product is to be used.

1.03 ENVIRONMENTAL REQUIREMENTS
Ambient temperature shall be between 40 and 80 degrees F (4 and 27 degrees C) when sealant is applied. Consult manufacturer when sealant cannot be applied within these temperature ranges.

1.04 DELIVERY, STORAGE, AND HANDLING
Deliver material in manufacturer's original unopened container with labels intact. Labels shall indicate contents and expiration date on material.

1.05 WARRANTY
Sealant work shall be free from defects for a period of three (3) years from date of Final Acceptance. Contractor shall remove any defective work or material and replace them with new work and materials. The warranty shall be signed jointly by the Contractor and the sealant manufacturer.

PART 2 – MATERIALS

2.01 SEALANT MATERIALS

Sealants shall be uniform, homogenous, and free from lumps, skins and coarse particles when mixed. Sealants shall be non-staining and non-bleeding with a Hardness of 15 minimum and 50 maximum, as measured by ASTM C661 method. Non-sagging sealant shall be used for vertical and overhead horizontal joints and self-leveling pedestrian/traffic grade sealant shall be used for horizontal joints.

Sealant color shall match the color of the principal wall material adjoining the area of application.

A. Type 1 – Immersible (Polyurethane)

Immersible sealant shall be capable of being continuously immersed in water and shall be a single-component, moisture curing, polyurethane based sealant conforming to ASTM C920, Type S, Grade NS, or P, Class 25. Non-sag sealant shall be Sika Chemical Corp.; Sikaflex-1a., Mameco International; Vulkem 116, or approved equal. Self-Leveling sealants shall be Sonneborn; Sonolastic SL-1, Mameco International; Vulkem 45, or approved equal.

B. Type 2 – Sanitary Sealant (Silicone)

Silicone sealant shall be one-component and shall be formulated to resist mold growth and repeated exposure to high humidity while retaining adhesion, flexibility, and color. Sealant shall meet the requirements of ASTM C920, Type S, Grade NS, Class 25, Use NT, G,A, O. Sanitary sealant shall be Dow Corning; 786, General Electric; Sanitary Sealant, or approved equal.

C. Type 3 – Fire Penetration Sealant

Fire penetration sealant shall be Dow Corning Corp.; Fire Stop Sealant or Foam, 3M Corp.; Fire Barrier Caulk CP25 and Putty 303, General Electric; Pensil Sealant or Foam, The Carborundum Co.; Fyre Putty, Hilti Construction Chemicals; CS240, or approved equal.

D. Type 4 – Joint Filler (Polyurea)

Joint filler shall be two-component, semi-rigid material and shall conform to ACI 302.1R. Color shall be gray. Joint filler shall be Euclid Chemical Co.; EUCO QWIK joint, L & M Construction Chemical; Joint Tite 750, Sonneborn; TF-100 control joint filler, or approved equal.

E. Type 5 –Rubber Sealant (Polysulfide)

Polysulfide rubber sealant shall be one or two-components and shall meet the requirements of ASTM C920. Sealant shall be Pecora; GC-5, GC-9, Sonneborn; Sonoclastic – two-part polysulfide sealant, Morton Polymer Systems; Thiokil Sealants, or approved equal.

2.02 BACKUP MATERIAL

Backup material shall be nongassing, extruded, closed-cell round polyethylene foam rod, compatible with sealant used, and as recommended by sealant manufacturer. Size shall be as recommended by sealant material manufacturer. Provide for joints greater than 3/16-inch wide. Back up material shall be Haveg Industries; Minicel, Dow Corning; Ethafoam SB, Sonneborn; Sonofoam, Hercules, Inc.; HBR, or approved equal.

2.03 AUXILIARY MATERIALS

A. Bond Breaker

Bond breaker shall be pressure sensitive tape as recommended by sealant manufacturer to suit application.

B. Joint Cleaner

Joint cleaner shall be non-corrosive and non-staining, as recommended by sealant manufacturer; compatible with joint forming materials.

C. Primer

Primer shall be non-staining, as recommended by sealant manufacturer to suit application.

PART 3 – EXECUTION

3.01 GENERAL

Use of more than one material for the same joint is not allowed unless approved by the sealant manufacturer. Install joint sealants in accordance with ASTM C1193. Horizontal and Sloping Joints of 1-Percent Maximum Slope: Use self-leveling (Grade P) joint sealant. Steeper Sloped Joints, Vertical Joints, and Overhead Joints: Use non-sag (Grade NS) joint sealant.

3.02 PREPARATION

Verify that joint dimensions, and physical and environmental conditions, are acceptable to receive sealant. Surfaces to be sealed shall be clean, dry, sound, and free of dust, loose mortar, oil, and other foreign materials. Mask adjacent surfaces where necessary to maintain neat edge. Starting of work will be construed as acceptance of subsurfaces. Apply primer to dry surfaces as recommended by sealant manufacturer. Verify that joint shaping materials and release tapes are compatible with sealant. Examine joint dimensions and size materials to achieve required width/depth ratios. Carefully follow manufacturer's instructions for mixing multi-component products.

3.03 INSTALLATION

Use joint filler to achieve required joint depths, to allow sealants to perform intended function. Install backup material as recommended by sealant manufacturer. Where possible, provide full-length sections without splices; minimize number of splices. Tape sealant may be used as joint filler if approved by sealant manufacturer. Use bond breaker where recommended by sealant manufacturer.

Seal joints around window, door and louver frames, expansion joints, and elsewhere as indicated. Where piping, conduit, ductwork, etc. penetrate wall, seal each side of wall opening. Follow manufacturer's recommendation and instructions, filling joint completely from back to top, without voids. Tool slightly concave after sealant is installed and leave sealant with an even neat finish. When tooling white or light color sealant, use a water-wet tool. Finish joints free of air pockets, foreign embedded matter, ridges, and sags. Make all joints water and airtight.

3.04 CLEANING

Clean surfaces next to the sealed joints of smears or other soiling resulting from sealing application. Replace damaged surfaces resulting from joint sealing or cleaning activities.

3.05 JOINT SEALANT SCHEDULE

A. Type 1 - Polyurethane

Use Type 1 immersible polyurethane for the interior and exterior building joints and elsewhere as indicated on the Drawings.

B. Type 2 - Silicone

Use Type 2 silicone sanitary sealant for joints between backsplashes, lab sinks, and around plumbing fixtures where they fit against walls and floors.

C. Type 3 – Fire Rated

Use sealant Type 3 to seal voids and holes around penetrations through fire rated elements.

D. Type 4 - Polyurea

Use polyurea joint filler for filling interior control joints, sawcut, and construction joints in concrete floors.

E. Type 5 - Polysulfide

Use Type 5 polysulfide for filling joints in the chemical rooms where sealant is exposed to concentrated chlorine gas or liquid.

PART 4 - MEASUREMENT AND PAYMENT

No separate payment will be made for Joint Sealants. Payment for work in this Section shall be included as part of the applicable Lump Sum or Unit Prices stated in other Sections.

-END OF SECTION-

SECTION 08710 - FINISH HARDWARE

PART 1 - GENERAL

1.01 SCOPE

This Section covers the work necessary to furnish and install all door hardware that are required for swing doors. The Contractor shall furnish all labor and materials needed to complete the work included in this section, complete.

It shall be the specific duty and responsibility of the Contractor to examine the Contract Documents and furnish proper hardware for all openings, whether scheduled or not. Furnish such hardware in type and quality suitable for the service required and comparable to those specified for similar conditions.

1.02 SUBMITTALS

A. Product Data

Submit manufacturers technical product data for each item of hardware in accordance with Section 01330-PROJECT RECORDS AND SUBMITTALS and as described herein. Include whatever information may be necessary to show compliance with requirements, and include instructions for installation and for maintenance of operating parts and finish. Coordinate hardware with doors, frames and related work to ensure proper size, thickness, hand, function and finish of hardware. Include the following information in the submittals:

1. Type, style, function, size and finish of each hardware item
2. Name and manufacturer of each item
3. Fastenings and other pertinent information
4. Mounting locations for hardware
5. Door and frame sizes and materials
6. Keying information
7. Clearly indicate how the Owner's instructions on keying of locks is to be fulfilled.

1.03 QUALITY ASSURANCE

Obtain each type of hardware (latch and lock sets, hinges, closers, etc.) from a single manufacturer.

A. Supplier Qualifications

The door hardware supplier shall be a recognized architectural door hardware supplier, with warehousing facilities in the vicinity of the Work, that has a record of successful service performance for supplying door hardware similar in quantity, type, and quality to that indicated for this Work.

The supplier shall meet with Owner's locksmith coordinator to finalize keying requirements and to obtain final instructions in writing.

Finish hardware supplied for this Work shall comply with all applicable codes, including provisions for accessibility by the physically handicapped required by the California Code of Regulations, Title 24, Part 2 and the Americans with Disabilities Act (ADA).

B. Fire-Rated Openings

Provide door hardware for fire-rated openings that complies with NFPA Standard No. 80 and requirements of authorities having jurisdiction.

Provide only items of door hardware that are listed and are identical to products tested by UL, Warnock Hersey, FM, or other testing and inspecting organization acceptable to authorities having jurisdiction for use on types and sizes of doors indicated in compliance with requirements of fire-rated door and door frame labels.

Where emergency exit devices are required on fire-rated doors (with supplementary marking on doors' UL or FM labels indicating "Fire Door to be Equipped with Fire Exit Hardware") provide UL or FM label on exit devices indicating "Fire Exit Hardware."

1.04 PRODUCT HANDLING

Provide secure lock-up for hardware delivered to the Work but not yet installed. Control handling and installation of hardware items which are not immediately replaceable, so that completion of the Work will not be delayed by hardware losses, both before and after installation.

1.05 MAINTENANCE

Furnish a complete set of specialized tools and maintenance instructions as needed for Owner's continued adjustment, maintenance, and removal and replacement of door hardware.

PART 2 - MATERIALS

2.01 ACCEPTABLE MANUFACTURERS

Acceptable manufacturers are as follows:

A. Hinges.....Hager, McKinney, Stanley, or equal
B. Locksets/Latchsets.……Schlage "L" Series, 03 Levers, or equal
C. Wall Bumpers, Holders and Floor Stops.....Hager, Quality, Ives, or equal
D. Exit Devices.....Von Duprin or equal
E. Automatic Flush Bolts.....Hager or equal
F. Gaskets.....Pemko or equal
G. Threshold.....Pemko or equal.

2.02 FABRICATION

The Drawings show direction of slide, swing or hand of each door leaf. Furnish each item of hardware for proper installation and operation of door movement as shown.

Produce hardware units of basic metal and forming method indicated, using manufacturer's standard metal alloy, composition, temper, and hardness, but in no case of lesser (commercially recognized) quality than specified for the applicable hardware units by applicable ANSI A156 series standard for each type hardware item and with ANSI A156.18 for finish designations indicated. Do not furnish "optional" materials or forming methods for those indicated, except as otherwise specified.

Provide hardware manufactured to conform to published templates, generally prepared for machine screw installation. Do not provide hardware which has been prepared for self-tapping sheet metal screws, except as specifically indicated. Doors specified require reinforcement for UL approved screw attachment of all hardware items to fire rated doors. Thru-bolting will not be acceptable and will be cause for rejection of doors.

Provide concealed fasteners for hardware units which are exposed when door is closed, except when no standard units of the type specified are available with concealed fasteners. Do not use thru-bolts for installation where bolt head or nut on the opposite face is exposed in other work, except where it is not feasible to adequately reinforce the item. In such cases, provide sleeves for each thru-bolt or use hex screw fasteners.

2.03 HINGES

Provide only template-produced units. Furnish Phillips flat-head or machine screws for installation of units. Finish screw heads to match surface of hinges. Hinges shall be Hager BB 1191 32 D solid stainless steel with stainless steel hinge pins conforming to ANSI A5112, or approved equal. Hinges shall be provided with hinge pins as follows, except as otherwise noted:

A. Steel hinges: Steel pins
B. Non-ferrous hinges: Stainless steel pins
C. Exterior doors: Non-removable pins
D. Interior doors: Non-rising pins
E. Tips: Flat button and matching plug, finished to match leaves.
F. Number of hinges: Provide number of hinges indicated but not less than three hinges per door leaf for doors 90-inches or less in height and one additional hinge for each 30-inches of additional height.
G. Size of hinges: Unless otherwise specified, hinges for doors through 3-foot, 0-inches wide shall be 4.5-inches x 4.5-inches. Hinges for doors over three feet wide shall be 5-inches x 5-inches.

2.04 LOCKSETS AND LATCHSETS

Contractor shall provide and install locksets and latchsets. Locksets shall be stainless steel mortise locks with levers and escutcheon trim. Contractor shall furnish and install all cylinders.

Keys will be provided and keyed by the Contractor in conformance with the Owners standards for quantity and type of key. Locksets and latchsets shall be Schlage L9465P, 03L trim, 630 finish, or approved equal.

2.05 WALL, FLOOR, AND OVERHEAD STOPS AND HOLDERS

Furnish and install cast brass wall stops equal to Hager 256S wall stop and holder, wherever door strikes wall. Where wall stops will not work, use Hager 268F floor stop and holder. Where wall or floor stops will not work, provide satin stainless steel Glenn Johnson heavy duty overhead door holder/stop, 90 Series, Hold-Open Model, US32D for doors 3 feet and less in width and use 79 Series, US32D for doors wider than 3 feet, or approved equal.

2.06 FLUSH BOLTS

Flush bolts for metal doors shall be non-handed and shall combine a constant latching top bolt with an automatic bottom bolt. Flush bolts shall be a Hager 293D, or approved equal.

2.07 COORDINATORS

All paired doors shall have door coordinators which will prevent the active door from closing before the inactive door, by means of a lever and trigger mechanism. Coordinator channel shall be constructed of steel with a paintable prime coat finish, length variable per door opening. Coordinator shall have a safety mechanism which will allow the active door to close first, if under extreme pressure. Coordinators shall be Hager 297D, or approved equal.

2.08 DOOR CLOSERS

Door closers for exterior doors up to 4-foot, 0-inches and interior doors up to 5-foot, 0-inches shall be heavy duty, surface mounted, manufactured of heavy duty cast iron, with an aluminum colored powder coat finish. Closer shall be non-handed, non-sized, meet ADA requirements, have a hold-open arm function, and have a non-metallic cover. Surface closers shall be Hager Series 5300, Grade 1, Traditional, with Aluminum painted finish, or approved equal.

2.09 EXIT DEVICES

Exit devices (panic bars) shall be stainless steel, non-handed, field-sizeable, devices for single or double doors and shall coordinate and comply with the lockset/latchsets specified above. Exit devices shall be UL listed Panic Hardware (FVSR) SA163 (N). Fire devices (F) shall be UL listed Fire Exit Hardware (GXHX) R4504 (N), A label. Exit devices shall be tested in accordance to ANSI A156.3, 1989, Grade 1. Panic bars shall be Von Duprin Series 98 Exit Devices, with US32D finish, or approved equal.

2.10 THRESHOLDS, GASKETS, WEATHERSTRIPPING, AND ASTRAGALS

Thresholds shall be smooth saddle type, manufactured of stainless steel and shall be Pemko 175SS or approved equal. Gaskets shall be self-adhesive silicone Pemko S88W smoke seal gaskets and Pemko HSS2000 fire seal gaskets, or approved equal. Weatherstripping shall be the rigid jamb type with an extruded silicone rubber seal and shall be Pemko 303AS, or approved equal. Overlapping astragals shall be installed on pairs of doors to conceal the gap between the doors. Astragals shall be manufactured of stainless steel and shall be fastened with through-bolts. Astragals shall be Pemko 357SS, or approved equal.

2.11 HARDWARE FINISHES

Provide matching finishes for hardware units at each door or opening, to the greatest extent possible, except as otherwise indicated. Provide quality of finish, including thickness of plating or coating (if any), composition, hardness and other qualities complying with manufacturer's standards, but in no case less than specified for the applicable units of hardware by referenced standards.

PART 3 - EXECUTION

3.01 INSTALLATION

Install each hardware item in compliance with the manufacturer's instructions and recommendations. Wherever cutting and fitting is required to install hardware onto or into surfaces which are later to be painted or finished in another way, coordinate removal, storage, and reinstallation, or application of surface protections, with finishing work specified. Do not install surface-mounted items until finishes have been completed on the substrate.

Set units level, plumb and true to line and location. Adjust and reinforce the attachment substrate as necessary for proper installation and operation. Drill and countersink units which are not factory-prepared for anchorage fasteners; space fasteners and anchors in accordance with industry standards. Set thresholds for exterior doors in full bed of butyl-rubber or polyisobutylene mastic sealant.

3.02 ADJUST AND CLEAN

Adjust and check each operating item of hardware and each door, to ensure proper operation or function of every unit. Replace units which cannot be adjusted to operate freely and smoothly as intended for the application made. Clean adjacent surfaces soiled by hardware installation.

3.03 MAINTENANCE SERVICE

Approximately six (6) months after filing of the Notice of Completion for the project by the Owner, the Contractor shall replace hardware items which have deteriorated or failed due to faulty design, materials or installation of hardware units at no additional cost to the Owner.

PART 4 - MEASUREMENT AND PAYMENT

No separate payment will be made for Finish Hardware. Payment for work in this Section shall be included as part of the applicable Lump Sum or Unit Prices stated in other Sections.

-END OF SECTION-

SECTION 08710 - FINISH HARDWARE

PART 1 - GENERAL

1.01 SCOPE

This Section covers the work necessary to furnish and install all door hardware that are required for swing doors. The Contractor shall furnish all labor and materials needed to complete the work included in this section, complete.

It shall be the specific duty and responsibility of the Contractor to examine the Contract Documents and furnish proper hardware for all openings, whether scheduled or not. Furnish such hardware in type and quality suitable for the service required and comparable to those specified for similar conditions.

1.02 SUBMITTALS

A. Product Data

Submit manufacturers technical product data for each item of hardware in accordance with Section 01330-PROJECT RECORDS AND SUBMITTALS and as described herein. Include whatever information may be necessary to show compliance with requirements, and include instructions for installation and for maintenance of operating parts and finish. Coordinate hardware with doors, frames and related work to ensure proper size, thickness, hand, function and finish of hardware. Include the following information in the submittals:

1. Type, style, function, size and finish of each hardware item
2. Name and manufacturer of each item
3. Fastenings and other pertinent information
4. Mounting locations for hardware
5. Door and frame sizes and materials
6. Keying information
7. Clearly indicate how the Owner's instructions on keying of locks is to be fulfilled.

1.03 QUALITY ASSURANCE

Obtain each type of hardware (latch and lock sets, hinges, closers, etc.) from a single manufacturer.

A. Supplier Qualifications

The door hardware supplier shall be a recognized architectural door hardware supplier, with warehousing facilities in the vicinity of the Work, that has a record of successful service performance for supplying door hardware similar in quantity, type, and quality to that indicated for this Work.

The supplier shall meet with Owner's locksmith coordinator to finalize keying requirements and to obtain final instructions in writing.

Finish hardware supplied for this Work shall comply with all applicable codes, including provisions for accessibility by the physically handicapped required by the California Code of Regulations, Title 24, Part 2 and the Americans with Disabilities Act (ADA).

B. Fire-Rated Openings

Provide door hardware for fire-rated openings that complies with NFPA Standard No. 80 and requirements of authorities having jurisdiction.

Provide only items of door hardware that are listed and are identical to products tested by UL, Warnock Hersey, FM, or other testing and inspecting organization acceptable to authorities having jurisdiction for use on types and sizes of doors indicated in compliance with requirements of fire-rated door and door frame labels.

Where emergency exit devices are required on fire-rated doors (with supplementary marking on doors' UL or FM labels indicating "Fire Door to be Equipped with Fire Exit Hardware") provide UL or FM label on exit devices indicating "Fire Exit Hardware."

1.04 PRODUCT HANDLING

Provide secure lock-up for hardware delivered to the Work but not yet installed. Control handling and installation of hardware items which are not immediately replaceable, so that completion of the Work will not be delayed by hardware losses, both before and after installation.

1.05 MAINTENANCE

Furnish a complete set of specialized tools and maintenance instructions as needed for Owner's continued adjustment, maintenance, and removal and replacement of door hardware.

PART 2 - MATERIALS

2.01 ACCEPTABLE MANUFACTURERS

Acceptable manufacturers are as follows:

A. Hinges.....Hager, McKinney, Stanley, or equal
B. Locksets/Latchsets.……Schlage "L" Series, 03 Levers, or equal
C. Wall Bumpers, Holders and Floor Stops.....Hager, Quality, Ives, or equal
D. Exit Devices.....Von Duprin or equal
E. Automatic Flush Bolts.....Hager or equal
F. Gaskets.....Pemko or equal
G. Threshold.....Pemko or equal.

2.02 FABRICATION

The Drawings show direction of slide, swing or hand of each door leaf. Furnish each item of hardware for proper installation and operation of door movement as shown.

Produce hardware units of basic metal and forming method indicated, using manufacturer's standard metal alloy, composition, temper, and hardness, but in no case of lesser (commercially recognized) quality than specified for the applicable hardware units by applicable ANSI A156 series standard for each type hardware item and with ANSI A156.18 for finish designations indicated. Do not furnish "optional" materials or forming methods for those indicated, except as otherwise specified.

Provide hardware manufactured to conform to published templates, generally prepared for machine screw installation. Do not provide hardware which has been prepared for self-tapping sheet metal screws, except as specifically indicated. Doors specified require reinforcement for UL approved screw attachment of all hardware items to fire rated doors. Thru-bolting will not be acceptable and will be cause for rejection of doors.

Provide concealed fasteners for hardware units which are exposed when door is closed, except when no standard units of the type specified are available with concealed fasteners. Do not use thru-bolts for installation where bolt head or nut on the opposite face is exposed in other work, except where it is not feasible to adequately reinforce the item. In such cases, provide sleeves for each thru-bolt or use hex screw fasteners.

2.03 HINGES

Provide only template-produced units. Furnish Phillips flat-head or machine screws for installation of units. Finish screw heads to match surface of hinges. Hinges shall be Hager BB 1191 32 D solid stainless steel with stainless steel hinge pins conforming to ANSI A5112, or approved equal. Hinges shall be provided with hinge pins as follows, except as otherwise noted:

A. Steel hinges: Steel pins
B. Non-ferrous hinges: Stainless steel pins
C. Exterior doors: Non-removable pins
D. Interior doors: Non-rising pins
E. Tips: Flat button and matching plug, finished to match leaves.
F. Number of hinges: Provide number of hinges indicated but not less than three hinges per door leaf for doors 90-inches or less in height and one additional hinge for each 30-inches of additional height.
G. Size of hinges: Unless otherwise specified, hinges for doors through 3-foot, 0-inches wide shall be 4.5-inches x 4.5-inches. Hinges for doors over three feet wide shall be 5-inches x 5-inches.

2.04 LOCKSETS AND LATCHSETS

Contractor shall provide and install locksets and latchsets. Locksets shall be stainless steel mortise locks with levers and escutcheon trim. Contractor shall furnish and install all cylinders.

Keys will be provided and keyed by the Contractor in conformance with the Owners standards for quantity and type of key. Locksets and latchsets shall be Schlage L9465P, 03L trim, 630 finish, or approved equal.

2.05 WALL, FLOOR, AND OVERHEAD STOPS AND HOLDERS

Furnish and install cast brass wall stops equal to Hager 256S wall stop and holder, wherever door strikes wall. Where wall stops will not work, use Hager 268F floor stop and holder. Where wall or floor stops will not work, provide satin stainless steel Glenn Johnson heavy duty overhead door holder/stop, 90 Series, Hold-Open Model, US32D for doors 3 feet and less in width and use 79 Series, US32D for doors wider than 3 feet, or approved equal.

2.06 FLUSH BOLTS

Flush bolts for metal doors shall be non-handed and shall combine a constant latching top bolt with an automatic bottom bolt. Flush bolts shall be a Hager 293D, or approved equal.

2.07 COORDINATORS

All paired doors shall have door coordinators which will prevent the active door from closing before the inactive door, by means of a lever and trigger mechanism. Coordinator channel shall be constructed of steel with a paintable prime coat finish, length variable per door opening. Coordinator shall have a safety mechanism which will allow the active door to close first, if under extreme pressure. Coordinators shall be Hager 297D, or approved equal.

2.08 DOOR CLOSERS

Door closers for exterior doors up to 4-foot, 0-inches and interior doors up to 5-foot, 0-inches shall be heavy duty, surface mounted, manufactured of heavy duty cast iron, with an aluminum colored powder coat finish. Closer shall be non-handed, non-sized, meet ADA requirements, have a hold-open arm function, and have a non-metallic cover. Surface closers shall be Hager Series 5300, Grade 1, Traditional, with Aluminum painted finish, or approved equal.

2.09 EXIT DEVICES

Exit devices (panic bars) shall be stainless steel, non-handed, field-sizeable, devices for single or double doors and shall coordinate and comply with the lockset/latchsets specified above. Exit devices shall be UL listed Panic Hardware (FVSR) SA163 (N). Fire devices (F) shall be UL listed Fire Exit Hardware (GXHX) R4504 (N), A label. Exit devices shall be tested in accordance to ANSI A156.3, 1989, Grade 1. Panic bars shall be Von Duprin Series 98 Exit Devices, with US32D finish, or approved equal.

2.10 THRESHOLDS, GASKETS, WEATHERSTRIPPING, AND ASTRAGALS

Thresholds shall be smooth saddle type, manufactured of stainless steel and shall be Pemko 175SS or approved equal. Gaskets shall be self-adhesive silicone Pemko S88W smoke seal gaskets and Pemko HSS2000 fire seal gaskets, or approved equal. Weatherstripping shall be the rigid jamb type with an extruded silicone rubber seal and shall be Pemko 303AS, or approved equal. Overlapping astragals shall be installed on pairs of doors to conceal the gap between the doors. Astragals shall be manufactured of stainless steel and shall be fastened with through-bolts. Astragals shall be Pemko 357SS, or approved equal.

2.11 HARDWARE FINISHES

Provide matching finishes for hardware units at each door or opening, to the greatest extent possible, except as otherwise indicated. Provide quality of finish, including thickness of plating or coating (if any), composition, hardness and other qualities complying with manufacturer's standards, but in no case less than specified for the applicable units of hardware by referenced standards.

PART 3 - EXECUTION

3.01 INSTALLATION

Install each hardware item in compliance with the manufacturer's instructions and recommendations. Wherever cutting and fitting is required to install hardware onto or into surfaces which are later to be painted or finished in another way, coordinate removal, storage, and reinstallation, or application of surface protections, with finishing work specified. Do not install surface-mounted items until finishes have been completed on the substrate.

Set units level, plumb and true to line and location. Adjust and reinforce the attachment substrate as necessary for proper installation and operation. Drill and countersink units which are not factory-prepared for anchorage fasteners; space fasteners and anchors in accordance with industry standards. Set thresholds for exterior doors in full bed of butyl-rubber or polyisobutylene mastic sealant.

3.02 ADJUST AND CLEAN

Adjust and check each operating item of hardware and each door, to ensure proper operation or function of every unit. Replace units which cannot be adjusted to operate freely and smoothly as intended for the application made. Clean adjacent surfaces soiled by hardware installation.

3.03 MAINTENANCE SERVICE

Approximately six (6) months after filing of the Notice of Completion for the project by the Owner, the Contractor shall replace hardware items which have deteriorated or failed due to faulty design, materials or installation of hardware units at no additional cost to the Owner.

PART 4 - MEASUREMENT AND PAYMENT

No separate payment will be made for Finish Hardware. Payment for work in this Section shall be included as part of the applicable Lump Sum or Unit Prices stated in other Sections.

-END OF SECTION-

SECTION 09900 - PAINTING

Bid Item No. 10

PART 1 - GENERAL

1.01 SCOPE
This Section includes everything necessary for, or incidental to, painting and coating all metal, piping, concrete slabs, concrete masonry units, walls, ceilings, or other surfaces requiring painting, except as otherwise hereinafter specifically excluded, complete.

All necessary scaffolding shall be furnished and installed by the Contractor. Such scaffolding shall conform to regulations of the State Industrial Accident Commission and local ordinances.

1.02 SUBMITTALS
The Contractor shall submit the following items to the Engineer for review and color selection:

A. Color cards
Submit Color cards for all coatings proposed for use showing full range of standard colors.

B. Product Data
Submit product data including generic description, complete technical data, surface preparation and application instructions.

C. Coating System Data Sheets
Submit Coating System Data Sheets. A sample is included at the end of this Section.

D. Manufacturer's Certification
Submit the manufacturer's certification that coatings comply with specified requirements and are suitable for intended application.

E. Warranty:
Submit the manufacturer's standard warranty.

1.03 SURFACES REQUIRING PAINTING
The following items shall be painted on-site. All exposed pump components, piping, including valves and fittings, and electrical conduits. The pump station building walls, floors and ceilings and associated interior and exterior appurtenances shall be painted in addition to an anti-graffiti coating which shall be applied to the exterior of the pump station building.

1.04 WORK NOT INCLUDED
Factory coated equipment such as the motor control center, telemetry, pneumatic components, roofing, fascia, and chlorination equipment is not included in this Section.

1.05 QUALITY ASSURANCE

A. Single Source

All materials of a paint system, including primer and finish coats, shall be produced by the same paint manufacturer unless otherwise approved by the Engineer. Thinners, cleaners, driers, and other additives shall be as recommended by the paint manufacturer of the particular coating.

B. Manufacturer Representative

The paint manufacturer shall provide a representative to visit the jobsite at intervals during surface preparation and painting as may be required for product application quality assurance, and to determine compliance with the manufacturer's instructions and this Specification, and as may be necessary to resolve field problems attributable to, or associated with, the manufacturer's products furnished under this Contract.

C. Surface Preparation

Preparation of surfaces and application of coatings shall be in conformance with the applicable AWWA, SSPC, and ASTM specifications, this Specification, and the printed recommendations of the paint manufacturer.

D. Weather

Prepare surfaces and apply and cure coatings within air and surface temperature range in accordance with the manufacturer's instructions. The surface temperature shall be a minimum of 40-degrees F and 5-degrees above the dew point. Do not prepare surfaces or apply coatings in dust, smoke, rain, fog, or damp or humid weather or if the wind velocity is above the manufacturer's limit. Schedule coating work to avoid excessive dust and airborne contaminants.

E. Ventilation

Provide ventilation during coating evaporation stage in confined or enclosed areas in accordance with AWWA D102.

F. Inspection

The Contractor shall give the Engineer a minimum of three (3) days advance notice of the start of any surface preparation work or coating application work. All such work shall be performed only in the presence of the Engineer, unless the Engineer has granted prior approval to perform such work in their absence.

Inspection by the Engineer, or the waiver of inspection of any particular portion of the work, shall not be construed to relieve the Contractor of the Contractor's responsibility to perform the work in accordance with these Specifications.

For all coatings subject to immersion, full cure must be obtained for the completed system prior to submersion. Consult the coatings manufacturer's written instructions

for these requirements. The coating shall not be immersed for any purpose until completion of the curing cycle.

PART 2 – MATERIALS

2.01 GENERAL

All materials used, except as otherwise specified in carrying out the provisions of this Contract, shall be manufactured by the following companies, or approved equals:

- American Protective Coating
- Fuller O'Brien
- ICI Devoe
- Kelly Moore
- Pittsburg Paints
- Sherwin Williams
- TNEMEC

2.02 PAINT MATERIALS

The following surface preparations and paint and coating materials shall apply to this project. Paint materials shall be manufactured by TNEMEC, ICI Devoe, or approved equal.

A. System Number 1 – Submerged Steel, Interior Pipe Ends or Fittings

The interior of steel pipe ends or fittings, or for any other steel that is in contact with potable water shall meet the requirements of the Food and Drug Administration (FDA) for use in potable water and shall be coated as follows:

1. **Surface Preparation:** Abrasive Blast (SP10)

2. **Paint Material:**

   a. First Coat: High Solids Epoxy, 5 to 6 mils
      1. TNEMEC Pota-Pox 80 Series 141 or
      2. ICI Devoe Bar-Rust 233H.

   b. Second Coat: High Solids Epoxy, 5 to 6 mils
      1. TNEMEC Pota-Pox 80 Series 141 or
      2. ICI Devoe Bar-Rust 233H.

B. System Number 2 – Exterior Station Piping, Valves, Pump Discharge Heads, Conduits, and Fittings

All exposed metal surfaces including the exterior of station piping, valves, pump discharge heads, conduits and fittings that are exposed to weather or are located inside the pump station building shall be coated as follows:

1. **Surface Preparation:** Commercial Blast (SP 6)

2. **Paint Material:**

   a. First Coat: Zinc-Rich Urethane, 2.5 to 3.5 mils.
      1. TNEMEC-Zinc Series 90-97 or
      2. ICI Devoe Catha-Coat 302H.

   b. Second Coat: Polyamide Epoxy, 4 to 6 mils.
      1. TNEMEC Epoxoline-HS Series 166 or Series V69F or
      2. ICI Devoe Bar-Rust 235 (In Winter) or Bar-Rust 231 (In Summer)

   c. Third Coat: Aliphatic Acrylic Polyurethane, 2 to 3 mils
      1. TNEMEC Endura-Shield II Series 1075 or
      2. ICI Devoe Devthane 379H

C. System Number 3 – Factory Primed Steel Doors and Frames

All exterior and interior factory primed steel doors, frames and miscellaneous equipment that are exposed to weather or are located inside the booster pump station building shall be coated as follows:

1. **Surface Preparation:** Factory Primed, Clean and Dry

2. **Paint Material-Interior Applications:**

   a. First Coat: Polyamide Epoxy, 4 to 5 mils
      1. TNEMEC Chembuild Series 135 or
      2. ICI Devoe Bar-Rust 235

   b. Second Coat: Polyamide Epoxy, 4 to 5 mils
      1. TNEMEC Epoxoline-HS Series 166 or Series V69F or
      2. ICI Devoe Bar-Rust 235

3. **Paint Material-Exterior Applications:**

   a. First Coat: Polyamide Epoxy, 4 to 5 mils
      1. TNEMEC Chembuild Series 135 or
      2. ICI Devoe Bar-Rust 235 (In Winter) or Bar-Rust 231 (In Summer)

   b. Second Coat: Aliphatic Acrylic Polyurethane, 2 to 3 mils
      1. TNEMEC Endura-Shield II Series 1075 or

2. ICI Devoe Devthane 379H

D. System Number 4 – Exterior Ductile and Cast Iron Pipe, Valves, and Fittings

Ductile iron and cast iron piping, valves, and fittings exposed to weather and ultraviolet light deterioration or underground conditions shall be coated as follows:

1. **Surface Preparation:** In accordance with manufacturer's instructions
2. **Paint Material - Exterior Applications:**

   a. First Coat: Polyamide Epoxy, 4 to 5 mils
      1. TNEMEC Epoxoline HS Series 166 or Series V69F or
      2. ICI Devoe Bar-Rust 235

   b. Second Coat: Aliphatic Acrylic Polyurethane, 2 to 3 mils
      1. TNEMEC Endura-Shield II Series 1075 or
      2. ICI Devoe Devthane 379H

3. **Paint Material - Below Ground Applications:**

   a. First Coat: Polyamide Epoxy, 4 to 5 mils
      1. TNEMEC Epoxoline-HS Series 166 or Series V69F or
      2. ICI Devoe Devtar 5A HS @ 6-8 mils DFT

   b. Second Coat: Coal Tar Epoxy, 8 to 10 mils
      1. TNEMEC Tneme-Tar Series 46H-413 or
      2. ICI Devoe Devtar 5A HS @ 6-8 mils DFT

E. System Number 5 – Interior Ductile and Cast Iron Pipe Valves and Fittings

Ductile iron and cast iron piping, station piping, valves, and fittings located inside the pump station building or exposed to other interior humid conditions shall be coated as follows:

1. **Surface Preparation:** In accordance with manufacturer's instructions

2. **Paint Material:**

   a. First Coat: Polyamide Epoxy, 4 to 5 mils
      1. TNEMEC Epoxoline HS Series 166 or Series V69F or
      2. ICI Devoe Bar-Rust 235

   b. Second Coat: Polyamide Epoxy, 4 to 5 mils
      1. TNEMEC Epoxoline HS Series 166 or Series V69F or
      2. ICI Devoe Bar-Rust 235

F. System Number 6 – Exterior Concrete Masonry Units and Concrete Walls

The concrete block walls of the fence (but not the pump station building) shall be coated only with an anti-graffiti coating as follows:

1. **Surface Preparation:** **CMU**-Allow mortar to cure for 14-days minimum. Level protrusions and mortar splatter. **Concrete**-Allow new concrete to cure for 30-days minimum, followed by abrasive blast.

2. **Anti-Graffiti Clear Coat Paint Material:**

   a. First Coat: Aliphatic Urethane, 2 to 3 mils
      1. TNEMEC (NA)
      2. ICI Devoe Devthane 379 H

   b. Second Coat: Aliphatic Urethane, 2 to 3 mils
      1. TNEMEC (NA)
      2. ICI Devoe Devthane 379 H

G. System Number 7 - Interior Concrete Masonry Units and Concrete Walls

1. **Surface Preparation:** **CMU**-Allow mortar to cure for 14-days minimum. Level protrusions and mortar splatter. Voids and openings in concrete block surfaces shall be pointed. **Concrete**-Allow new concrete to cure for 30-days minimum, followed by abrasive blast.

2. **Paint Material:**

   a. First Coat: Waterborne Cementitious Acrylic Filler, 60 to 80 square feet/gallon.
      1. TNEMEC Envirofill Series 130, as required or
      2. ICI Devoe Bloxfil 4015, as required

   b. Second Coat: Polyamide Epoxy, 4 to 6 mils
      1. TNEMEC Epoxoline HS Series 166 or Series V69F or
      2. ICI Devoe Bar-Rust 235

   c. Third Coat: Polyamide Epoxy, 4 to 6 mils
      1. TNEMEC Epoxoline HS Series 166 or Series V69F or
      2. ICI Devoe Bar-Rust 235

H. System Number 8 – Sheet-Rock

The sheet-rocked ceilings in the interior of the pump station building shall be coated as follows:

1. **Surface Preparation:** Sand joint compound smooth and feather-edge. All surfaces shall be clean, dry, and free of oil, grease and other contaminants.

2. **Paint Material:**

   a. First Coat: Acrylic, 1 to 2 mils
      1. TNEMEC PVA Sealer or
      2. ICI Devoe Ultra-Hide 1030 PVA

   b. Second Coat: Polyamide Epoxy, 4 to 6 mils
      1. TNEMEC Epoxoline HS Series 166 or Series V69F or
      2. ICI Devoe Bar-Rust 235

   c. Third Coat: Polyamide Epoxy, 4 to 6 mils
      1. TNEMEC Epoxoline HS Series 166 or Series V69F or
      2. ICI Devoe Bar-Rust 235

I. System Number 9 - Chemical Room Protective Coatings

The sheet rocked ceilings, and moldings of the chemical treatment rooms that are exposed to high concentrations of chlorine, fluoride, or other chemicals shall be coated as follows:

1. **Surface Preparation: CMU**-Allow mortar to cure for 30 days min. Level protrusions and mortar splatter. **Sheet Rock**-Sand joint compound smooth and feather-edge.

2. **Paint Material:**

   a. Primer CMU only: Waterborne Cementitious Acrylic, 60 to 80 square feet/gallon
      1. TNEMEC Envirofill Series 130 or
      2. ICI Devoe Bloxfil 4015

   b. First Coat: Polyamine Epoxy, 4 to 6 mils
      1. TNEMEC Tneme-Glaze Series 282 or
      2. ICI Devoe Devran 124 or Devmat 111

   c. Second Coat: Polyamine Epoxy, 4 to 6 mils
      1. TNEMEC Tneme-Glaze Series 282 or
      2. ICI Devoe Devran 124 or Devmat 111

J. System Number 10 - Interior Concrete Floors

All concrete floors in the pump station building including the chemical room(s) shall have a non-skid protective coating suitable for moderate chemical exposure and heavy traffic and impact exposure. The Contractor shall be responsible for any

preparatory work required by the coating manufacturer. The Contractor shall supply a 2-foot minimum square mockup of the concrete floor anti-skid coating system for approval by the Engineer prior to beginning work on the floor.

1. **Surface Preparation:** Allow new concrete to cure 30-days. Verify dryness, followed by Shot Blast or Mechanically Abrade.

2. **Paint Material:**

   a. First Coat: Polyamine Epoxy, 6 to 8 mils
      1. TNEMEC Epoxoprime Series 201 or
      2. ICI Devoe Pre-Prime 167, 1.0-1.5 mils DFT

   b. Second Coat: Polyamine Novolac Epoxy, 6 to 8 mils
      1. TNEMEC Tneme-Glaze Series 282. Following the coating, broadcast selected silica between 3 to 5 lbs/gallon of applied coating or
      2. ICI Devoe Devran 124, following the coating, broadcast selected silica to excess.

   c. Third Coat: Polyamine Novolac Epoxy, 6 to 8 mils
      1. TNEMEC-Remove excess silica when dry to foot traffic and then coat with Tneme-Glaze Series 282 or
      2. ICI Devoe-Remove excess silica when dry to foot traffic and then coat with Devran 124.

K. System Number 11 - Exterior PVC and Fiberglass Materials

The exterior of PVC and fiberglass piping (FRP) and conduits exposed to weather and ultraviolet light deterioration shall be coated as follows:

1. **Surface Preparation:** All wax, oil, grease, dirt, dust or other contaminates shall be removed from PVC and FRP surfaces that are to be coated, by wiping with a solvent compatible with the specified coating. Scarify all PVC or FRP surfaces prior to coating.

2. **Paint Material:**

   a. First Coat: Polyamide Epoxy, 4 to 6 mils
      1. TNEMEC Epoxoline HS Series 166 or Series V69F or
      2. ICI Devoe Devran 203, 2 -4 mils DFT

   b. Second Coat: Aliphatic Acrylic Polyurethane, 2 to 3 mils

1. TNEMEC Endura-Shield II Series 1075 or
2. ICI Devoe Devthane 379H

L. System Number 12 - Galvanized Metal Repair

Defects in factory applied galvanized items such as galvanized fencing, ladders, metal doors, and door hangers, shall be coated with a Zinc-Rich coating with a minimum of 14-pounds of metallic zinc content per gallon. The coatings for potable and non-potable applications shall be as follows:

1. **Surface Preparation:** Solvent Clean (SP1), followed by Hand Tool (SP2), Power Tool (SP3) or Brush-off Blast (SP7). Provide a minimum 1-mil profile to aid adhesion.

2. **Paint Material:**

   a. Potable Water: NSF Zinc-Rich Urethane, 2.5 to 3.5 mils
      1. TNEMEC Hydro-Zinc 91-H_20
      2. ICI Devoe Catha-Coat 316

   b. All Other Applications: Zinc-Rich Urethane, 2.5 to 3.5 mils
      1. TNEMEC Tneme-Zinc Series 90-97 or
      2. ICI Devoe Catha-Coat 302H

M. System Number 13 – Aluminum, Non-Ferrous Metals, Gutters and Downspouts

Aluminum materials such as gutters and downspouts that are exposed to weather or highly humid atmospheres shall be coated as follows:

1. **Surface Preparation:** Solvent Clean (SP1), followed by Hand Tool (SP2) and Power Tool (SP3)

2. **Paint Material:**

   a. First Coat: Polyamide Epoxy, 6 to 8 mils
      1. TNEMEC Epoxoline HS Series 166 or Series V69F or
      2. ICI Devoe Bar-Rust 235

   b. Second Coat: Polyamide Epoxy, 6 to 8 mils
      1. TNEMEC Epoxoline HS Series 166 or Series V69F or
      2. ICI Devoe Bar-Rust 235

N. Fusion Bonded Coating Repair

Defects in factory applied fusion bonded coatings for buried and non-buried applications shall be repaired with a manufacturer-approved liquid repair material for use at the installation site.

O. Steel Fencing

Steel fencing shall be coated in accordance with Section 02825 – Steel Pale Security Fencing.

PART 3 – EXECUTION

3.01 GENERAL

No paint, varnish or stain shall be reduced or applied in any way except as herein specifically called for, or recommended by the manufacturer. Should conflict occur between specifications and manufacturer's recommendations and/or standard practice, the Engineer shall be notified prior to bid submittal for clarification.

It is the responsibility of the Contractor to inspect and provide substrata surfaces that are prepared in accordance with these Specifications and the printed directions and recommendations of the paint manufacturer whose product is to be applied.

3.02 MATERIAL DELIVERY AND STORAGE

All materials shall be new and shall be delivered to the worksite in unopened containers that plainly show, at the time of use, the designated name, date of manufacturer, and name of manufacturer. Materials shall be stored in a suitable protected area that is heated or cooled as required to maintain temperatures within the range recommended by the manufacturer.

3.03 AIR QUALITY

All coatings shall conform to the air quality regulations applicable at the location of use. Coating materials which cannot be guaranteed by the manufacturer to conform, whether or not specified by product designation, shall not be used.

3.04 COATING COMPATIBILITY

The Contractor shall be responsible for ensuring the compatibility of field coatings with each other or with the coatings on shop coated or previously coated surfaces. Coatings used in the first field-coat over shop-coated or previously coated surfaces shall cause no wrinkling, lifting, or other damage to underlying coats. Coatings used in successive field coats shall be produced by the same manufacturer.

3.05 PROTECTION OF MATERIALS NOT TO BE PAINTED

Remove, mask, or otherwise protect hardware, lighting fixtures, switchplates, aluminum surfaces, machined surfaces, couplings, shafts, bearings, nameplates on machinery and other surfaces not intended to be painted. Provide drop cloths to prevent paint materials from falling on or marring any adjacent surfaces. Protect working parts of all mechanical and electrical equipment from damage during surface preparation and painting process. All openings in motors shall be masked to prevent paint and all other materials from entering the motors.

3.06 ENVIRONMENTAL CONDITIONS

Abrasive blast cleaning shall not be performed whenever the relative humidity exceeds 85-percent, nor whenever the surface temperature is less than 5-degrees F above the dew point of the ambient air. Coating manufacturer's recommendations to be strictly adhered to.

3.07 PAINT MIXING

Multiple-component coatings shall be prepared using all of the contents of the container for each component as packaged by the paint manufacturer. No partial batches will be permitted. Multiple-component coatings that have been mixed shall not be used beyond their pot life.

3.08 SCAFFOLDING

All necessary scaffolding shall be furnished and installed by the Contractor. Such scaffolding shall conform to regulations of the State Industrial Accident Commission and local ordinances.

3.09 SAFETY

Painting shall be performed in strict accordance with the safety recommendations of the paint manufacturer; with the safety recommendations of the National Association of Corrosion Engineers contained in the publication, Manual for Painter Safety; Federal, state, and local agencies having jurisdiction.

All necessary precautions shall be taken to prevent fire. Rags and waste soiled with paint shall be removed from the premises at the end of each day's work, or stored in metal containers with metal covers.

3.10 SURFACE PREPARATION

A. Metal Surface Preparation

All sharp edges and corners shall be ground smooth and all weld spatter, slag burrs, and other objectionable surface conditions must be removed prior to the surface preparation for coating.

No surface preparation blasting will be permitted prior to submission of samples. All workmanship for metal surface preparation as specified shall be in strict conformance with the current Steel Structures Painting Council (SSPC) Specifications as follows:

Solvent Cleaning	SP 1
Hand Tool Cleaning	SP 2
Power Tool Cleaning	SP 3
White Metal Blast Cleaning	SP 5
Commercial Blast Cleaning	SP 6
Brush-Off Blast Cleaning	SP 7
Pickling	SP 8
Near-White Blast Cleaning	SP 10

Coat abrasive blast-cleaned surfaces with primer before visible rust forms on surface. Do not leave blast-cleaned surface uncoated for more than 8-hours.

Where OSHA or EPA regulations preclude standard abrasive blast cleaning, wet or vacu-blast methods may be required. Coating manufacturer's recommendations for wet blast additives and first coat application shall apply.

3.11 APPLICATION OF PAINT

A. General

Manufacturer's written instructions for applying each type of paint or protective coating shall be furnished to the Engineer prior to application. Cleaned surfaces and all coats shall be inspected prior to the succeeding coat. Schedule such inspection with the Engineer in advance. Apply all coatings in strict accordance with the paint manufacturer's recommendations, as approved by the Engineer. Succeeding coats shall be painted in a different color to facilitate inspection. Final color shall be as selected by the Owner. Sufficient time shall be allowed between coats to assure thorough drying of previously applied paint. Coating shall be applied in a neat manner that will produce an even film of uniform and proper thickness, with finished surfaces free of runs, sags, ridges, laps, and brush marks. Units to be bolted together and to structures shall be painted prior to assembly or installation, unless otherwise specified.

B. Shop Primed Surfaces

All shop primed items shall be inspected at the jobsite for compliance with these Specifications. Schedule such inspection with the Engineer in advance. Areas of chipped, peeled, or abraded primer shall be hand or power sanded feathering the edges. The areas shall then be spot primed with the specified primer.

C. Manufacturer Applied Paint Systems

Abraded areas on factory finished items shall be repaired in strict accordance with the manufacturer's directions. Repaired areas shall be carefully blended into the original finish.

D. Film Thickness

Coverage is listed as either total minimum dry film thickness in mils (MDFT) or the spreading rate in square feet per gallon (SFPG). The number of coats is the minimum required irrespective of the coating thickness. Additional coats may be required to obtain the minimum required paint thickness, depending on method of application, differences in manufacturers' products, and atmospheric conditions. Maximum film build per coat shall not exceed the coating manufacturer's recommendations.

E. Damaged Coatings

Damaged coatings, pinholes and holidays shall have the edges feathered and repaired in accordance with the recommendations of the paint manufacturer, as approved by

the Engineer. Recoat entire surface where touch-up result is visibly different, either in sheen, texture, or color.

F. Unsatisfactory Application

If the item has an improper appearance, or insufficient film thickness, the surface shall be cleaned and top coated with the specified paint material to obtain the specified appearance and coverage. Specific surface preparation requirements shall be determined by the coating manufacturer, as approved by the Engineer.

All visible areas of chipped, peeled, or abraded paint shall be hand- or power-sanded feathering the edges. The areas shall then be primed and finish coated in accordance with the Specifications. Depending on the extent of repair and its appearance, a finish sanding and topcoat may be required by the Engineer. Work shall be free of runs, bridges, shiners, laps, or other imperfections. Evidence of these conditions shall be cause for rejection. Any defects in the coating system shall be repaired by the Contractor per written recommendations of the coating manufacturer, at no additional cost to the Owner.

Leave all staging up until areas are inspected and approval is given by the Engineer, for each surface or coating. Staging removed prior to inspection shall be replaced.

3.12 SHIPPING

In all cases where pre-coated items are to be shipped to the jobsite, all efforts shall be made to protect the coating from damage. Coated items shall be battened to prevent abrasion. Contractor shall use nonmetallic or padded slings and straps in handling. Items will be rejected for excessive damage.

3.13 ONE-YEAR INSPECTION

The Owner shall set the date for the one-year anniversary inspection of the coating systems. The inspection shall be attended by the Owner, Engineer, and the manufacturer's representative. The Contractor shall repair deficiencies in coating systems as determined by the Engineer in accordance with the manufacturer's instructions.

PART 4 - MEASUREMENT AND PAYMENT

Painting satisfactorily completed, shall be paid for on a Lump Sum basis as stated in the **Bid Item Schedule** for the item listed below:

Bid Item No. 10 - PAINTING

-END OF SECTION-

COATING SYSTEM DATA SHEET

Surface Description	System No. (from spec.)

Surface Preparation Description	

Coating	MDFT, mils	Color	Manufacturer and Product
First Coat (Primer)			
Touch up			
Second Coat			
Third Coat			
Total System			Not less than minimum thickness specified

Notes: (Attached if needed.)

Project:
Painting Contractor

Attach products' Technical Data Sheet (if applicable) for each paint system submittal.

SECTION – 10050 BUILDING

Bid Item No. 11

PART 1 - GENERAL

1.01 SCOPE

This Section covers the work necessary to furnish materials and construct the pump station building. The pump station building shall have masonry block walls with steel reinforcing extending into the concrete floor and foundation. All cells of all masonry blocks are to be filled with concrete. The building floor shall be of reinforced concrete construction as shown on the Drawings. The roof is to be preformed metal with a metal fascia. A removable roof section and hatch shall be utilized to facilitate removal of the pump. The interior of the building is to be painted and the Owner shall select the colors. Ventilation, air conditioning, and appurtenant ducting shall be installed as shown on the Plans and detailed within this Specification. The Contractor shall furnish all labor and materials needed to complete the work included in this section, complete. See the following sections for additional requirements 04200-CONCRETE MASONRY UNITS, 06100-ROUGH CARPENTRY, 07410-PREFORMED RIBBED METAL ROOFING, 07900-JOINT SEALANTS, 08110-METAL DOORS AND FRAMES, and 08710-FINISH HARDWARE.

1.02 SUBMITTALS

Contractor shall submit producer's or manufacturer's specifications and installation instructions for the following products, in accordance with Section 01330-PROJECT RECORDS AND SUBMITTALS. Include laboratory test reports and other data to show compliance with specifications (including specified standards).

A. Sheet Rock
B. All Fixtures
C. Sound baffles
D. Fiberglass insulation
E. Wall and ceiling fans and vents
F. Heating and air conditioning equipment
G. All miscellaneous hardware

PART 2 - MATERIALS

2.01 CONCRETE

All concrete for the building slab, equipment pads, and pump pedestal shall comply with the requirements of Section 03300-CONCRETE, except as herein specified.

2.02 MASONRY BLOCKS

Masonry blocks shall conform to the requirements of Section 04200-CONCRETE MASONRY UNITS.

2.03 MORTAR

Mortar shall conform to the requirements of Section 04200-CONCRETE MASONRY UNITS.

2.04 LUMBER

Lumber shall conform to the requirements of Section 06100-ROUGH CARPENTRY.

2.05 ROOFING

Preformed ribbed metal roofing shall conform to Section 07410-PREFORMED RIBBED METAL ROOFING.

2.06 STEEL DOORS AND FRAMES

A. Hollow Steel Doors

The hollow steel doors shall be manufactured of not less than No. 18 gauge steel. The doors shall be 1-3/4 inches thick and shall be louvered as noted. Louvers shall be a minimum of 16 gauge galvanized steel and shall be weatherproof. Removable insect screens shall be installed on the inside face of the louver and shall be 0.063 x ¼-inch aluminum screen set in a fixed aluminum U-frame. Drilling for hardware shall be from templates. Steel doors shall be manufactured by Ceco Regent, Amweld, Steelcraft, or an approved equal.

B. Steel Door Frames

The steel door frames shall be the set-in type for eight-inch block walls, constructed of not less than No. 16 gauge steel and shall be of the same manufacturer as the door.

C. Finish Hardware

The Contractor shall furnish and install all finish hardware as indicated on the Drawings or in these specifications, including but not necessarily limited to, the hardware listed herein and in Section 08710-FINISH HARDWARE. Hardware shall be furnished complete, including all parts necessary for satisfactory operation. All locking hardware shall be keyed to the Owners standard. Screws and bolts of proper size and design shall be furnished. In the event the Contractor proposes to furnish equivalent hardware in lieu of any of the items listed, the Contractor's schedule shall show the manufacturer's name and catalog number of each item. A complete hardware list shall be submitted to the Engineer for approval.

2.07 FIBERGLASS REINFORCED PLASTIC (FRP) DOORS AND FRAMES

A. General

FRP doors, frames, and all associated components shall be suitable for continuous exposure to the chemicals used within the pump station facility, including Calcium Hypochlorite 12% solution. FRP components shall be by Corrim Doors; equal by ChemPruf (with flanged frames) or equal.

B. Doors

Face sheets shall be seamless fiberglass reinforced polyester plastic, 0.110-in. thick with a 1-1/2 inch thick polyurethane core, U-factor of 0.14. Internal stiles and rails shall be structural fiberglass reinforced plastic with solid polymer corner reinforcement. Hardware shall be reinforced with solid polymer. The door shall be chemically welded in its entirety and coated with a polyester gel-coat following hardware machining to a minimum of 15-mils dry film thickness.

C. Frame

Frames shall be 5-3/4-inches wide by 2-inches deep with a hollow door-stop, reinforced with solid polymer according to templates provided by the hardware supplier.

D. Color – Gel Coat

Door and Frame color shall be selected by the Owner and shall match the other doors installed at the pump station.

E. Anchors

Frames shall be fastened to the masonry by fiberglass reinforced T-anchors. Stainless steel fasteners, 300 series as approved, shall be used for frame assembly and for all other fasteners.

2.08 FIBERGLASS INSULATION

Ceilings shall be insulated with fiberglass batts. Batt used to insulate ceilings shall be a minimum of 10-inches thick and shall have an insulation factor of R-30. Fiberglass batts shall be foil faced as manufactured by Owens Corning, or approved equal.

2.09 GYPSUM WALLBOARD

Gypsum wallboard shall be 5/8-inch thick, Greenboard, provided in maximum lengths available to minimize end-to-end joints, with tapered edges, and shall comply with ASTM C36 and ASTM C840 for application system and support spacing indicated. Provide auxiliary materials for gypsum drywall construction which comply with the recommendations of the manufacturer of the gypsum board. Gypsum wallboard and related materials shall be supplied by Domtar Gypsum Co., Georgia-Pacific Corp., Gold Bond Building Products Div., National Gypsum Co., United States Gypsum Co., or approved equal. Gypsum board screws shall comply with ASTM C1002.

2.10 GYPSUM WALLBOARD JOINT TREATMENT MATERIALS

Provide joint materials complying with ASTM C475, ASTM C840, and recommendations of manufacturer. Provide paper joint reinforcing tape and factory-prepackaged, job mixed, chemical-hardening, setting type powder joint compounds formulated for intended use. Factory-prepackaged vinyl based drying type joint compound formulated for intended use shall be used

for embedding tape and for first coast over fasteners and flanges of trim, and topping compound formulated for second and third coats.

For ceilings, provide special finishing joint compounds as recommended by the manufacturer.

A. First Application

USG Sheetrock Lightweight Setting Type (Easy Sand) Joint Compound

B. Topping and Skimming

Top and skim entire surface with Sheetrock Lightweight All-Purpose Joint Compound Ready-Mixed (Plus 3)

C. Texture and Surface Primer

Texture and prime to equalize porosity and texture with Sheetrock First Coat.

2.11 VENTILATION AND AIR CONDITIONING SYSTEMS

A. Chemical Room Fans

The Contractor shall furnish and install electric blower, ducting and rain caps for the chemical feed room. The blower shall be floor-mounted and of plastic construction. The motor shall be 1/3 horsepower, 110-volt single phase, 1140 RPM, TEFC. The fan shall be ducted through the ceiling and roof. The fan/motor shall have a polypropylene wheel, fiberglass housing, with a 360 to 625 cfm blower capability at a static pressure of ¾ to ¼ static pressure. The blower shall be manufactured by Saint-Gobain Performance Plastics Norton Blowers, or approved equal. The blower shall be equipped with a flexible connector fitted to a rigid 8-inch diameter PVC ducting and PVC rain cap as manufactured by the Ryan Herco Products Corporation, or approved equal. Anchor bolts shall be Type 316 stainless steel, quantity, insert and size by manufacturer.

B. Roof Mounted Turbine Vents

Roof-mounted vents shall be of the turbine type, with a minimum 12-inch throat, have ribbed blades and be constructed of heavy gauge galvanized metal construction. The turbine vents shall have Dupont Delrin bearings.

C. Air Conditioning Unit

1. SYSTEM DESCRIPTION

   The unit shall be a 4.0-ton outdoor wall-mounted, electric cooling unit utilizing a hermetic compressor for cooling duty. Unit shall discharge supply air as shown on contract drawings. Condenser fan/coil section shall have a draw-thru design with vertical discharge for minimum sound levels. The unit shall be manufactured by Bard Manufacturing Co., Model WA48, or approved equal.

2. QUALITY ASSURANCE

   a. Unit shall be rated in accordance with ARI Standards 210/240-94 and 270-95.

b. Unit shall be designed in accordance with UL Standard 1995.

c. Unit shall be manufactured in a facility registered to ISO 9001 manufacturing quality standard.

d. Unit shall be UL listed and c-UL certified as a total package for safety requirements.

e. Roof curb shall be designed to conform to NRCA Standards.

f. Insulation and adhesives shall meet NFPA 90A requirements for flame spread and smoke generation.

g. Cabinet insulation shall meet ASHRAE Standard 62P.

3. DELIVERY, STORAGE AND HANDLING
Unit shall be stored and handled per manufacturer's recommendations.

4. EQUIPMENT
The air conditioning unit shall be provided as specified in the Contract Drawings.

2.12 MISCELLANEOUS HARDWARE

A. Wood Screws
Wood screws shall be FS FF-S-111C and Am-1.

B. Nails, Bolts, Lagbolts, Nuts, and Washers
Refer to Section 06100-ROUGH CARPENTRY for requirements.

C. Expansion Bolts
Expansion bolts shall be Hilti KB3, or equal.

D. Gauge Metal Items
All gauge metal items (11-gauge and lighter) shall be fabricated from steel sheet, heavily galvanized. Except where heavier gauges are called for on the Drawings, gauge metal items shall not be lighter in gauge than the following:

Joist Hangers:

For 2-inch thick members:	16 gauge
For 3-inch and thicker members:	12 gauge
Framing Anchors:	18 gauge
Framing Clips:	16 gauge
Reinforcing Angles:	16 gauge
Post Caps:	16 gauge

Post Bases:	12 gauge
Tie Straps:	As Noted

2.13 SINK AND VANITY
The Contractor shall provide and install a 24" by 34.5" wooden vanity with a black mica top, one cabinet, one drawer, and one sink such as Grainger 4YK12 Stainless Steel with Grainger 2P948 faucet.

2.14 FLOOR DRAIN
The floor drain shall be Harrington Model PVC 4750 or equal, and suitable for temporary contact with calcium hypochlorite.

2.15 ACCESSORIES
Accessories shall be of the recessed or semi-recessed mounted type for stud wall construction, and surface mounted for concrete or masonry construction, unless otherwise specified. All items shall be such that grab bars shall not interfere with servicing. All items shall be of Type 304 stainless steel, with No. 4 finish.

A. Soap Dispenser
The soap dispenser shall be Bobrick B-4063, or approved equal.

B. Towel Dispenser/Waste Receptacle
The towel dispenser/waste receptacle shall be Bobrick B-3949, or approved equal.

PART 3 - EXECUTION

3.01 CONCRETE
Refer to Drawings and Section 03300-CONCRETE for requirements.

3.02 CONCRETE BLOCK WALLS
Installation of concrete block walls shall conform to Section 04200-CONCRETE MASONRY UNITS.

3.03 CARPENTRY
All rough carpentry shall conform to Section 06100-ROUGH CARPENTRY.

3.04 BEARING SURFACES AND PLATES
All bearings shall be full unless otherwise indicated on the Drawings. Plates in contact with masonry or concrete shall be completely bedded to obtain a continuous bearing, to be well anchored and bolted as shown.

All bearings surfaces on which structural members are to rest shall be finished, so as to give sure and even support. Where framing members slope, the ends shall be cut or notched as required to give a uniform bearing surface.

3.05 BLOCKING
All blocking required to support all items of finish as well as to cut off all concealed draft openings, shall be installed.

Fire-blocks, when of wood, shall be two-inches (nominal) in thickness by the full width of the opening being blocked. If the width of the opening is such that more than one piece of lumber is necessary, there shall be two thicknesses of 1-inch (nominal) material with broken joints. Fire-block shall be installed as required and at the locations shown in the Drawings.

3.06 PLYWOOD
All plywood shall be placed with face grain perpendicular to supports, continuously over at least two supports, except where otherwise specifically shown on the Drawings.

Joints shall be centered accurately over the supports; unless otherwise specifically shown on the Drawings. The end joints of plywood panels shall be staggered to achieve a minimum of continuity of joints.

All plywood shall be protected from moisture by use of all required waterproof coverings until such plywood has been covered with the next succeeding component or finish.

3.07 NAILS AND SPIKES
Only common wire nails or spikes of the dimensions shown on the nailing schedule shall be used, except where otherwise specifically noted in the Drawings.

For conditions not covered in the nailing schedule, provide penetration into the piece receiving the point of not less than ½ the length of the nail or spike provided, however, 16d nails may be used to connect two pieces of two-inch (nominal) thickness.

All nailing shall be achieved without splitting wood. Pre-boring shall be allowed as required. All split members shall be replaced.

Holes drilled for bolting shall be 1/16-inch larger in diameter than the bolts being used, and shall be straight and true, drilled from one side only.

Bolt threads must not bear on wood; washers shall be used under the head and the nut where both bear on wood. Washers shall be used under all nuts.

Where lag-screws and wood-screws are used, pre-bored holes shall be the same diameter as the root of the thread; holes shall be enlarged to shank diameter for the length of shank.

Unless otherwise indicated on the Drawings or as required by pertinent codes and regulations, provide at least the following nailing:

NAILING SCHEDULE

Blocking to joist bearing	2-10d toenailed each side
Blocking to joist or stud	2-10d toenailed each side
One-inch brace to stud	2-8d face nailed
Two-inch brace to stud	2-16d face nailed
Built-up beams eight-inches or less in depth	16d and twelve-inches on center, staggered
Joists and rafters to support At laps (twelve-inches min.)	2-10 toenailed each side
Multiple joists	4-16d face nailed 16d at twelve -inches on centers, staggered
Joists to sill or girder	2-16d toenailed

3.08 FIBERGLASS INSULATION

Fiberglass bat insulation shall be installed between all ceiling joists. Install fiberglass insulation as per manufacturer's recommendations and building code requirements. Install bats with tight contact between insulation and framing. Use fasteners and fastener spacing as required by manufacturer. Cleanly cut and tightly fit batts around electrical and plumbing components. Keep ventilation space unobstructed. Keep rips and surface damage minimal; repair damage wherever it occurs. Clean the work area and remove all scrap and excess materials from the site. Repair or replace defective work as directed by the Engineer.

3.09 WALLBOARD

All ceilings shall be finished with wallboard (sheet rock). Locate exposed end-butt joints as far from center of walls and ceilings as possible, and stagger not less than 24-inches in alternate courses of board. Install ceiling boards across framing in a manner which minimizes the number of end-butt joints, and which avoids end joints in the central area of the ceiling. Stagger end joints at least 24-inches. Install exposed gypsum board with face side out. Do not install imperfect, damaged or damp boards; butt boards together for a light contact at edges and ends with not more than 1/16-inch open space between boards; do not force into place. Position boards so that like edges abut, tapered edges against tapered edges and mill-cut or field-cut ends against mill-cut or field-cut ends. Do not place tapered edges against cut edges or ends.

Space fasteners in gypsum boards in accordance with referenced gypsum board application and finishing standard and manufacturer's recommendations. Where wallboard meets with the block

wall, the Contractor shall install a 1-inch x 4-inch molding around the complete perimeter of the room. The wallboard shall be attached to the trusses, dimpled, and taped in accordance with ASTM C840.

3.10 FINISHING WALLBOARD

Apply joint treatment at gypsum board joints (both directions), flanges of corner bead, edge trim, and control joints; penetrations; fastener heads, surface defects and elsewhere as required. Prefill open joints and rounded or beveled edges, if any, using setting-type joint compound. Apply joint tape at joints between gypsum boards, except where trim accessories are indicated.

Provide smooth finish for interior gypsum wallboard by applying the following joint compounds in 3 coats (not including prefill of openings in base), and sand between coats and after last coat:

A. Embedding and first coat: Setting-type joint compound;

B. Fill (second) coat: Setting-type joint compound;

C. Finish (third) coat: Ready-mix drying-type all-purpose or topping compound.

At ceilings, use materials and methods required to achieve a uniform appearance. Fill joints and set tape in setting type compound specified. Use drying type compound for second coat on joints and for skim coat entire surface for uniformity and apply initial texturing material to surfaces using specified material.

All wall board and moldings shall be painted in accordance with Section 09900-PAINTING of these Specifications.

3.11 FIXTURES AND ACCESSORIES

Fixtures and accessories shall be securely fastened to the supporting construction in accordance with the manufacturer's instructions. Accessories shall be protected from damage from the time of installation until acceptance.

3.12 VENTILATION AND AIR CONDITIONING

Fans, vents, and air conditioning units shall be installed at locations shown on Drawings and shall be installed per manufacturer’s instructions.

PART 4 - MEASUREMENT AND PAYMENT

All work as specified herein, satisfactorily completed, shall be paid for on a Lump Sum basis as stated in **Bid Item Schedule** for the item listed below:

Bid Item No. 11 - BUILDING

-END OF SECTION-

SECTION 10440 - SIGNS AND SAFETY EQUIPMENT

Bid Item No. 12

PART 1 - GENERAL

1.01 SCOPE
This Section covers work necessary to furnish and install all signs, safety equipment, fire extinguishers, pipe markers, and all appurtenances as shown on the Drawings and specified herein, complete.

1.02 GENERAL
Signs, pipe markers, and safety equipment shall be furnished and installed as specified herein. Where not specifically indicated or specified, fasteners, posts, and other accessories shall be provided as required and as recommended by the manufacturer of the specific item.

1.03 SUBMITTALS
Complete product literature and detailed drawings shall be submitted in accordance with the submittals sections.

PART 2 - MATERIALS

2.01 SIGNS
Signs shall be 10 inches x 7 inches in size and constructed of 0.040-inch aluminum with a baked enamel finish. Signs shall be for outdoor duty, pre-drilled for mounting, and contain OSHA heading descriptions as specified herein. Signs shall be as manufactured by the Seton Name Plate Company, New Haven, CT (800) 243-6624, or an approved equal.

2.02 CONDUIT AND PIPELINE MARKERS
The conduit or pipe shall be labeled by means of a pre-formed snap-around outdoor grade acrylic plastic marker with the condition, direction, and type of fluid marked in bold capital letters. The markers must have the proper coating to ensure resistance to acid and/or other corrosive conditions. All markers shall be OSHA and ANSI color coded, lettered, and comply with the requirements of NFPA 704.

2.03 PAINT
Paint shall be as specified in Section 09900-PAINTING and shall be black in color.

2.04 FIRE EXTINGUISHERS
Fire extinguishers shall be all-purpose, nitrogen-pressured, ABC dry chemical type and shall be U.L rated, with a 10-pound capacity. Cylinders are to be of heavy-duty steel construction, corrosion and impact resistant with a red polyester epoxy finish and a visual pressure gauge.

2.05 CHEMICAL HANDLING EQUIPMENT
The Contractor shall furnish one set of aprons, gloves and eye goggles, each of which shall be chemically inert to chlorinated solutions.

PART 3 - EXECUTION

3.01 INSTALLATION
Signs and pipe markers shall be installed after all equipment and building surfaces have been primed and painted.

3.02 SIGNS
Signs shall be furnished and mounted at various locations described herein, for the propose of indicating and defining specific hazards throughout the work area. Signs with placement locations are:

Location	No. Required	OSHA Heading	Wording
Above Fire Extinguishers	4	(None)	FIRE EXTINGUISHER
Eye Wash Station	1	EMERGENCY	SHOWER & EYE WASH STATION
Side of Pump Head	1	CAUTION	EQUIPMENT STARTS AUTOMATICALLY
On Wall next to Chlorine System	2	DANGER	CHLORINE
Exterior & Interior Doors to Chemical Treatment Room(s)	2	DANGER	CHEMICAL STORAGE
Both Doors to Electrical Room & Inside of Electrical Room	3	DANGER	HIGH VOLTAGE

3.03 CONDUITS AND PIPELINES
All conduits and pipelines shall be labeled as to the condition, direction, and type of fluid conveyed. The following table presents the minimum number of markers required. However, the Contractor shall be responsible for labeling all conduits and pipelines, as identified by the Engineer.

Conduit and Pipe Markers

Pipe or Conduit	Conduit/Pipe Size	No. Required	Location	Wording for Marker
Liquid Chlorine	1-1/2 inches	2	Chemical Room	Liquid Chlorine
Potable Water	12 - inch	1	Pump Station Piping	Potable Water
Water Supply	2 - inch	1	Water Manifold	Potable Water
Water Supply	¾ - inch	1	Water Manifold	To Pump Pre-Lube
Water Supply	1-1/2 - inch	1	Water Manifold	To Eyewash Station
Water Supply	¾ - inch	1	Water Manifold	To Outside Hose Bib
Water Supply	½ - inch	1	Water Manifold	To Sink
Water Supply	1- inch	1	Water Manifold	To Irrigation
Water Supply	1 - inch	2	Water Manifold	To Chlorinator
Water Supply	½ - inch	1	Water Manifold	To Pump Control Valve

3.04 FIRE EXTINGUISHERS

The Contractor shall install fire extinguisher(s) at the location(s) shown on the Drawings. The fire extinguishers shall be wall-mounted.

PART 4 - MEASUREMENT AND PAYMENT

Signs and safety equipment, satisfactorily completed, shall be paid for on a Lump Sum basis as stated in the **Bid Item Schedule** as listed below:

Bid Item No. 12 - SIGNS AND SAFETY EQUIPMENT

-END OF SECTION-

SECTION 15025 – PIPE

Bid Items No. 13

PART 1 – GENERAL

1.01 SCOPE

This Section consists of furnishing and installing ductile iron pipe (DIP), black steel pipe, polyvinyl chloride pipe (PVC), reinforced concrete pipe (RCP), copper tubing, fittings, closure pieces, pipe supports, bolts, nuts, gaskets, thrust blocks and all associated appurtenances, complete.

The Contractor shall ensure safety in the trenches, conform to all applicable OSHA requirements and provide all sheeting, shoring, or bracing as required. All materials, labor and workmanship associated with the installation of the piping shall conform to the applicable AWWA, ASTM and Sacramento County, the City of Citrus Heights, and the Sacramento Suburban Water District standards.

Do not prepare any shop drawings for, or make final order for, or design any pipe materials for any particular section of pipeline until all utilities that are to remain in that section of pipeline have been exposed.

See Sections 02300-EARTHWORK, 02320-TRENCH EXCAVATION AND BACKFILL, and 03300-CONCRETE, for additional requirements.

1.02 SUBMITTALS

A. Shop Drawings

The Contractor shall submit complete data on pipe, fittings, linings, coatings, and any manufacturer's installation instructions showing conformance with the applicable standard.

B. Certification

Certification properly executed by the manufacturer shall be furnished to the Engineer showing compliance to the applicable standards. Test data on tests performed shall be provided as requested by the Engineer.

1.03 DESIGN PRESSURES

The design pressure of pipe shown on the Drawings or in these Specifications is the minimum required static internal design pressure in pounds per square inch. The pipe shall be designed for this internal pressure, for earth loads, and for an AASHTO H-20 wheel load, all without exceeding the allowable design stresses. Pipe shall be designed for earth and wheel load both with and without internal pressure. In addition, pipe shall be designed for the test pressure specified herein without

exceeding 75-percent of yield stresses or joint design pressures. The design and test pressure for all pressurized pipe shall be 150-psi.

All fittings, couplings, valves, and other appurtenances shall be rated for the same or a higher design pressure as the pipe they are used on and shall withstand the test pressure without damage.

Provide thrust blocks or restrained joints at valves and fittings as shown or where not shown as necessary to prevent the movement or deflection of the pipe when under pressure. Thrust restraint design pressure shall be 200% of the pipe design pressure or the test pressure, whichever is greater.

1.04 PIPE DIAMETERS

The pipe diameters shown on the Drawings and used in these Specifications are inside diameters unless specific reference is made to outside diameter of the pipe or the pipe is a standardized product normally designated by a nominal size, e.g., ductile iron pipe.

1.05 MARKING AT PLANT

Each pipe and fitting shall be marked at the plant. Marking shall include size or diameter and class of pipe or fittings, manufacturer's identification, and date of manufacture.

1.06 ACCESS FOR INSPECTION

The Engineer and his representatives shall have access to all phases of the work, and the manufacturer shall provide proper facilities for access and inspection. Material, fabricated parts, and pipes which are discovered to be defective, or which do not conform to the requirements of this Specification, will be subject to rejection at any time prior to final acceptance of the pipe. The Engineer shall be notified a minimum of two (2) weeks prior to manufacture of the pipe or fittings. In addition, the Contractor shall give the Engineer three (3) working days advance notice of the start of any surface preparation or coating application work.

PART 2 – MATERIALS

2.01 PIPE

Pipe used in the construction of the water, drainage, sewer, and irrigation systems shall be of the type shown on the Drawings. It shall be the regular product of a firm who has successfully manufactured comparable pipe for at least three years.

A. Polyvinyl Chloride Pipe (PVC) for Potable Water Applications

1. Schedule 40 PVC pipe in sizes ½-inch to 8-inches shall conform to the latest revision of ASTM D1785, ASTM D2467 and ASTM D2665. The PVC pipe shall be manufactured in sections not to exceed 20-feet in length. The Contractor shall use gasketed bell and spigot pipe. Pipe and couplings shall be US manufactured by Johns-Manville, Certainteed, PW Pipe, Royal Pipe, or approved equal.

2. Schedule 80 PVC pipe in sizes ½-inch to 8-inches shall conform to the latest revision of ASTM D1785, ASTM D2467 and ASTM D2665. The PVC pipe shall be manufactured in sections not to exceed 20-feet in length. The Contractor shall use either solvent weld or gasketed bell and spigot pipe. Pipe and couplings shall be US manufactured by Johns-Manville, Certainteed, PW Pipe, Royal Pipe, or approved equal.

3. PVC pipe for potable water use 4-inches to 12-inches in diameter shall conform to the latest revision of AWWA Standard C900. The Contractor shall use the class of pipe stated on the Drawings. The PVC pipe shall be manufactured in cast-iron O.D.'s and in sections not to exceed 20-feet in length. The Contractor shall use either plain end pipe with elastomeric couplings or gasketed bell and spigot pipe. Pipe and couplings shall be US manufactured by Johns-Manville, Certainteed, PW Pipe, Royal Pipe, or approved equal.

B. Polyvinyl Chloride Pipe (PVC) for Gravity Sewage Applications.

PVC pipe shall be SDR 26 with integral bell gasket joints and conform to the latest revision of ASTM D3034 for diameters from 4-inches to 15-inches. Rubber gaskets shall be factory installed and conform to ASTM F477. Pipe joints shall conform to ASTM D3212.

C. Chlorinated Polyvinyl Chloride (CPVC)

CPVC pipe and fittings shall conform to ASTM D 2846, ASTM D1784 and shall conform to National Sanitation Foundation (NSF) Standard 61. Pipe and fittings shall be manufactured as a system and be the product of one manufacturer. Solvent cement joints shall be made in a two step process with primer manufactured for thermoplastic piping systems and solvent cement conforming to ASTM F493.

D. Ductile Iron Pipe (DIP)

Ductile iron pipe shall be Class 50 or Class 350 and shall conform to ANSI A21.51 (AWWA C151) for a minimum working pressure of 150-psi unless otherwise specified. (US Pipe, Tyler Pipe, Griffin Pipe) Ductile iron castings shall conform and be tested in accordance with ASTM A536. Casting grade for pipe shall be 60-42-10. Laying length shall be the manufacturers standard length, not to exceed 20-feet. Shorter lengths may be used when required for closures and proper location of special sections. The interior surface of all DIP shall be cement-mortar lined and seal coated in conformance with AWWA C104. Cement mortar shall be ASTM C150, Type II or V, low alkali, containing less than 0.06 percent alkalis. The exterior surface of pipe to be laid underground shall have a bituminous coating of either coal tar or asphalt base, approximately 1-mil thick in accordance with AWWA C151. The exterior surface of pipe to be installed above ground shall be coated with a Moisture-Cured Urethane (MCU) universal primer. Joints shall be push-on or mechanical type and shall conform to ANSI 21.11 (AWWA C111). Poly wrapped ductile iron shall not be used.

E. Rubber Gasketed Reinforced Concrete Pipe (RGRCP)

Reinforced concrete pipe shall conform to the specifications of ASTM Designation C 76. Joints for concrete pipe shall be rubber gasketed bell and spigot or other approved type, and shall be of such a design that when properly laid, they shall have a smooth and uniform interior surface. Each joint and all connections to manholes shall be sealed to prevent leakage. Sealing materials shall consist of cement mortar, rubber gasketed joints, or resilient materials conforming to Section 65-1.06A, 65-1.06B, and 65-1.06C of the CalTrans Standard State Specifications.

F. Copper Tubing

Copper tubing for use in underground water service shall be Type K hard copper tubing and compression fittings. Copper tubing for use in interior water service shall be Type K hard copper tubing and compression or lead-free solder sweat connections.

G. Black Steel Pipe

All black steel pipe size 4-inches in diameter and smaller shall conform to the requirements of ASTM A120, and shall be Schedule 40. Black steel piping 5-inches in diameter and larger shall conform to the requirements of ASTM A53, Schedule 40 and shall be Grade B. Butt-welded flanged fittings shall conform to ASME B16.5.

H. Welded Steel Pipe

Welded steel pipe shall be manufactured of steel plate of the thickness shown on the Drawings. Where not shown, the thickness shall be not less than 3/16 of an inch for pipe 24-inches in diameter and smaller, and not less than ¼-inch for larger sizes. Pipe materials, fabrication, and shop testing of straight pipe shall conform to the requirements of the "AWWA Standard for Steel Water Pipe 6 Inches and Larger" (AWWA C200). All outlets, 4-inch diameter and larger, shall be provided with reinforcing designed for the water working pressure specified or shown. Shop drawings of all welded steel pipe, 8-inches in diameter and larger shall be furnished in accordance with the General Conditions. For pipe 14-inches in diameter and larger, the inside diameter after lining shall be not less than the nominal diameter specified or shown. Pipe smaller than 14-inches in diameter may be furnished in standard outside diameters.

2.02 FITTINGS AND COUPLINGS

A. PVC Bell-and-Spigot and Solvent Weld Fittings

Bell-and-spigot and solvent weld type PVC fittings shall be standard commercial products fabricated by molding or by extrusion and machining and shall conform to the requirements of ASTM D2241 and these Specifications. The manufacturer of the fittings shall be in accordance with good commercial practice so as to produce fittings compatible with the type of PVC pipe furnished. Dimensions and tolerances of fitting joints shall conform to the tolerances of the PVC pipe furnished. The minimum burst strength of the fittings shall be not less than that of the adjacent pipe.

B. High Deflection Couplings for Polyvinyl Chloride Pipe

High deflection couplings shall be manufactured of extruded PVC coupling stock with a rated working pressure of 150-psi. Couplings shall meet the requirements of AWWA C900 Municipal Water Pipe. Couplings shall be High Deflection Stop Couplings by Certainteed, or approved equal.

C. Ductile Iron Fittings

Fittings shall be of ductile iron conforming to the requirements of "American National Standard for Gray-Iron and Other Liquids" (AWWA C110). (Tyler, Sigma) Fittings shall be lined with cement mortar in accordance with the requirements of the "American National Standard for Cement-Mortar Lining for Cast-Iron and Ductile-Iron Pipe and Fittings for Water" (AWWA C104). The exterior surface of fittings to be installed underground shall have a bituminous coating of either coal tar or asphalt base, approximately 1-mil thick in accordance with AWWA C151. The exterior surface of fittings to be installed above ground shall be coated with a Moisture-Cured Urethane (MCU) universal primer. Joints between PVC pipe and cast-iron valves or fittings shall be mechanical joint or approved equal. AWWA C153 compact fittings may also be used as an approved equal. Fittings shall be of a class at least equal to that of the adjacent pipe. Cast iron fittings are not permitted.

D. Flanged Coupling Adapters

Flanged coupling adapters shall be wrought steel or cast iron capable of withstanding the designated internal pressure without leakage or overstressing and shall be fusion epoxy lined and coated.

E. Flexible Couplings

Flexible couplings for use with steel pipe shall be Omni 441; Romac 501; or equal. Flexible couplings for use with ductile iron pipe shall be Omni 441; Romac 501; or equal. Diameter of the coupling shall be compatible with the outside diameter of the pipe on which the coupling is installed. Furnish all joint accessories with couplings. Bolts and nuts shall be zinc-coated. Steel middle rings shall be pressure tested beyond the yield point. Verify dimensions of all existing pipelines in the field before ordering couplings. Middle rings and followers shall be fusion epoxy lined and coated. Cast iron couplings, bolts, nuts, followers, and miscellaneous steel shall be shop primed in accordance with Section 09900-PAINTING.

Epoxy coated steel style flanged couplings shall consist of a steel body, steel or malleable iron follower rings, and steel bolts. Steel flanged coupling shall be as manufactured by Rockwell International, Inc.; Romac Industries, Inc.; or equal. Cast-style flexible coupling shall consist of a cast iron middle ring, malleable iron follower rings, and steel bolts. Cast flexible couplings shall be as manufactured by Rockwell International, Inc.; Romac Industries, Inc.; or equal.

Verify dimensions of all existing pipelines in the field before ordering couplings.

F. Transition Couplings

Flexible transition couplings shall be bolted, with ductile iron sleeve and end rings, fusion epoxy lined and coated, Ford Model 501, Omni 441, Romac 501, or equal. Diameter of the coupling shall be compatible with the outside diameter of the pipe on which the coupling is installed. Furnish all joint accessories with flexible couplings.

G. Expansion Joints

Flexible expansion joints shall be spool type, double hollow arch, and operate up to a minimum pressure of 150 pounds per square inch. Flanges shall have a class rating of 150 pounds per square inch. Expansion joints shall also include A36 carbon steel retaining rings and control units to protect against elongation. Expansion joints shall be Garlock model 204HP or equal.

H. Flanges

Unless otherwise shown on the Drawing, all flanges shall conform to AWWA C207 Class E. Steel ring flanges, 270-275 psi, shall match drilling pattern of ANSI B16.5 150 psi Standard for steel flanges. If 300-lb. class flanges are shown, they shall conform to ANSI B16.5 300-lb. class. Flanges shall have flat faces. Pipe flanges shall be attached with bolt holes straddling the vertical axis of the pipe unless otherwise shown. Attachment of the flanges to the pipe shall conform to the applicable requirements of the above-referenced AWWA Standard C207.

I. Nuts Bolts and Gaskets

Nuts and bolts shall be of carbon steel, ASTM A307, Grade A, hex head; the sizes and quantities recommend in AWWA C207. Gaskets for flanged joints shall be U.S. Pipe rubber gaskets in one piece conforming to AWWA C207, 1/8-inch thick. Gasket material shall be free from corrosive alkali or acid ingredients. Segmented straight-joint or interlocking gaskets will not be accepted.

2.03 APPURTENANCES

A. Service Saddles

Service saddles shall be brass, manufactured by Mueller or James Jones.

B. Coal Tar Tape

Coal Tar Tape shall be in conformance with AWWA C203.

C. Butyl Rubber Tape Wrap

Tape wrap shall be 15-mil butyl rubber adhesive, polyethylene-backed tape as produced by Polyken Division of the Kendall Company, Boston, MA; Royston Laboratories, Inc., Pittsburg, PA; or equal.

D. Copper Tracing Wire

Copper tracing wire shall be No. 10 A.W.G. insulated copper wire. Insulation shall be 1/16-inch PVC.

E. Warning Tape – non detectable

Warning tape shall be 3-inch wide, nominal 4.0 mil overall thickness of polyethylene film formulated to resist degradation due to acid and alkaline soils. The color of the water line tape shall be blue and in black bold letters printed "WATER."

F. Joint Lubricant

Furnish joint lubricant with the pipe. Furnish the amount and type recommended by the pipe manufacturer. The lubricant for water pipes shall be a water-soluble, nontoxic, vegetable soap compound conforming to United States Pharmacopeoia No. P39.

G. Feeler Gauge

Furnish sufficient feeler gauges of the proper size, type, and shape for use during installation to check the rubber gaskets.

H. Concrete for Thrust Blocks and Concrete Encasement

Concrete shall conform to Section 03300-CONCRETE.

2.04 FUSION EPOXY LINING AND COATINGS

Fittings, and flanges to be lined and coated with epoxy shall be lined and coated with a fusion-bonded epoxy coating (12 to 15-mil thickness) conforming to AWWA Standard C213. The lining and coating material shall be 100% solids, thermosetting, fusion-bonded, dry powder epoxy resin, such as "Scotchkote No. 203" (3M Company) or approved equal, applied by either the electrostatic or fluidized-bed method.

PART 3 - EXECUTION

3.01 TRENCH EXCAVATION AND BACKFILL

Conform to the requirements of Section 02320-TRENCH EXCAVATION AND BACKFILL.

3.02 PREPARATION AND HANDLING

All pipe, fittings, and appurtenances shall be installed in accordance with the manufacturer's recommendations and according to accepted water works practice. Each section of pipe and each fitting shall be thoroughly cleaned out before it is installed. All pipe, fittings, and appurtenances, shall be carefully lowered into the trench by suitable tools or equipment in such a manner as to prevent any damage, particularly to any lining and coating. When required by the Engineer, approved slings shall be used to lower the pipe. Under no circumstances shall pipe or accessories be dropped into a trench. All pipe, fittings and appurtenances, shall be examined for defects before lowering into the trench. Any defective, damaged, or unsound materials shall be rejected.

3.03 DIRECTION OF LAYING

On slopes of 10-percent or less, the pipe may be laid in either direction on the slope. On slopes exceeding 10-percent, the pipes shall be laid in the uphill direction, unless otherwise permitted by the Engineer. For pipes with push-on joints, the bell end shall normally face the direction of laying.

3.04 ALIGNMENT

Pipelines intended to be straight shall be so laid, and in no case shall deviation from a straight line exceed 0.30-foot for line and 0.10-foot for grade from the line and grade shown on the Drawings. Where pipelines are to be laid on a curve by means of unsymmetrical closure of spigot into bell, the pipe may be deflected at the joints. Under no circumstances shall the deflection exceed 75-percent of the maximum as recommended by the pipe manufacturer. Horizontal or vertical deflections may be achieved by pulling the pipe on PVC installations up to 75-percent of the maximum as recommended by the pipe manufacturer.

Where horizontal or vertical curves are shown in the alignment which cannot be installed by joint deflection of standard pipe lengths or by pulling the pipe on PVC installations, the Contractor with the Engineer's approval, may select from the following options:

A. Use shorter pipe lengths and allowable joint deflection as specified.

B. Use special mitered joints.

C. Use standard or special fabricated bends.

D. Use high deflection couplings.

If alternates "B" or "C" are used, thrust blocking may be required. If the Engineer determines that thrust blocking is necessary, it shall be furnished at no additional cost to the Owner.

3.05 LAYING AND JOINTING PIPE AND FITTINGS

Materials used in jointing pipe shall only be that furnished with the pipe or recommended by the manufacturer. After a section of pipe has been lowered into the prepared trench, clean the end of the pipe to be joined, the inside of the joint, and the rubber ring immediately before joining the pipe. Make assembly of the joint in accordance with the recommendations of the manufacturer. Provide all special tools and appliances required for the jointing assembly.

The gasket position shall be checked with a feeler gauge, furnished by the pipe manufacturer, to assure proper seating. After the joint has been made, check pipe for alignment and grade. Apply sufficient pressure in making the joint to assure that the joint is "home" at the stab line, as defined in the standard installation instructions provided by the pipe manufacturer. To assure proper pipe alignment and joint makeup, place sufficient pipe zone material to secure the pipe from movement before the next joint is installed.

Take the necessary precautions required to prevent excavated or other foreign material from entering the pipe during the laying operation. At all times, when laying operations are not in progress, at the

close of the day's work, or whenever the workers are absent from the job, close and block the open end of the last laid section of pipe with water tight plugs or bulkheads to prevent entry of foreign material or creep of the gasketed joints.

Take all precautions necessary to prevent the "uplift" or floating of the line prior to the completion of the backfilling operation.

Flexible expansion joints shall be installed against full-face flanges on each side of joint to protect fitting from cracking.
A plain end shall be used when making up a mechanical fitting.

3.06 UNSUITABLE CONDITIONS FOR LAYING PIPE
Do not lay pipe in water, or on an unstable trench bottom, or when in the opinion of the Engineer, trench conditions are unsuitable.

3.07 PIPE CUTTING
When cutting and/or machining the pipe is necessary, use only tools and methods recommended by the pipe manufacturer. All field-cut PVC shall be beveled and lubricated before joining.

3.08 COPPER TRACING WIRE
All runs of non-metallic pipe shall have locating wire laid along the top of the pipe and at all valves and appurtenances and held in place with ties or hitches of the same kind of wire, except RCP pipe used for storm drains or overflow lines. The ties or hitches shall be spaced not more than 20-feet apart. The copper wire is to be used in the future as a means of locating the pipe with an electronic-type pipe locator. The copper wire shall be brought to the surface in each valve box so a direct connection can be made to the electronic pipe locator. Care shall be taken to insure no "open" circuits occur. Splice tracing wire by stripping insulation and twisting bare copper wires together and soldering or electrical wire nuts may be used to form a permanent connection. Wrap connection with standard black electrical tape.

3.09 THRUST BLOCKS
All pipeline tees, plugs, caps, bends, and other locations where unbalanced forces exist shall be thrust restrained as shown or specified.

Thrust blocks shall be installed such that the thrust block shall extend from the fitting to undisturbed soil, and shall be of such bearing area as to assure adequate resistance to the force to be encountered. Minimum size of thrust blocking shall be in accordance with the standard detail shown on the Drawings. The excavation configuration and soil conditions may require additional concrete. Additional concrete shall be furnished and installed as a part of the contract prices at no additional cost to the Owner.

Thrust blocks shall be kept clear of the joints so that the pipe and fitting joints will be accessible for repairs, unless otherwise directed. Side forms shall be used to contain the concrete. The concrete shall be placed in accordance with Section 03300-CONCRETE.

3.10 CONCRETE ENCASEMENT

Concrete encasement shall be installed as indicated on the Drawings. All pipe to be encased shall be suitably supported and blocked in proper position, and shall be anchored to prevent flotation. Except for welded joint pipe, a flexible joint shall be provided within 18-inches or as shown on the Drawings, from the terminations of any concrete encasement.

3.11 BEVELED PIPE

Sections of pipe with one or both ends beveled may be used for curved alignment. Beveled pipe shall have a maximum deflection of five (5) degrees from a plane perpendicular to the pipe axis unless otherwise shown on the Drawings or approved by the Engineer.

3.12 THREADED JOINTS

Threaded joints, for service connections, air release assemblies, etc., shall be made with Teflon Plumber's Tape.

3.13 REINFORCED CONCRETE PIPE JOINTS

Each joint shall be sealed to prevent leakage. Joints sealed with cement mortar or resilient materials, shall be sealed both inside and outside.

If cement mortar is used in sealing the joint, the sealed joint shall be protected and cured in a manner approved by the Engineer. If the sealing material will not adhere to the pipe, or if a portion of the outside of the joint is inaccessible, the Contractor shall use a "diaper" or other method approved by the Engineer to properly seal the joint.

Immediately prior to making a cement mortar joint, the tongue and inside of the groove shall be thoroughly wetted with clean water.

3.14 WRAPPED PIPE

Field-applied tape wrap on minor piping shall be applied in accordance with manufacturer's instructions and as follows: Clean items with power brushes to remove rust, scale, or other material. Grind or file smooth any sharp burrs that will damage the wrap and solvent clean to remove oils or greases. Apply primer and spiral wrap with a 50-percent overlap to form a double layer. Apply with enough tension to make wrap conform to the surface without wrinkles, but do not stretch excessively. Roll or press the overlap seams to ensure complete bonding.

3.15 TESTING

All pipe and appurtenances shall be hydrostatically tested. See Section 15950-PERFORMANCE TESTING AND FACILITY STARTUP for Specifications.

PART 4 - MEASUREMENT AND PAYMENT

Piping, including fittings, closure pieces, pipe supports, bolts, nuts, gaskets, thrust blocks and all associated appurtenances, satisfactorily completed, will be paid for on a Lump Sum basis as stated in the **Bid Item Schedule** for the items stated below:

Bid Item No. 13 - PIPE

-END OF SECTION-

SECTION 15110 - VALVES AND RELATED APPURTENANCES

Bid Item No. 14

PART 1 - GENERAL

1.01 SCOPE
This Section covers the work necessary for furnishing and installing butterfly valves, globe valves, gate valves, check valves, flow meters, flow transmitters, backflow preventers, corporation stops, ball valves, combination air/vacuum valves, valve boxes, and all related appurtenances, complete.

1.02 SUBMITTALS
The Contractor shall submit complete specifications, data, and catalog cuts or drawings covering the items furnished under this section.

PART 2 - MATERIALS

2.01 GENERAL
The Contractor shall furnish and install all valves as shown and specified. All valves shall be designed for and have a working pressure class rating equal to or greater than the design pressure shown on the Drawings for the adjoining pipe. Valves shall be capable of withstanding the field test pressure of the connecting piping without damage. All valves of one type and class shall be by the same manufacturer.

Each valve body shall be shop tested under a test pressure equal to twice its design water-working pressure, by the manufacturer, unless otherwise specified.

2.02 BUTTERFLY VALVES
Butterfly valves shall be Class 150 and shall meet or exceed the requirements of AWWA Standard C504. Valves shall be manufactured by Clow, Mueller, Pratt, or approved equal. When specified for underground service, valves shall be fusion epoxy coated and suitable for buried service, shall be equipped with a 2-inch square operating nut, and shall open CCW. Unless shown otherwise on the Drawings, valves shall be furnished with flanged, push-on or mechanical joint ends. Valves for above-ground service shall be equipped with a manual gear actuator, handwheel, and position indicator. Valves shall be designed and manufactured to shut off bubble tight at the rated pressure in either direction at a maximum flow rate of 16 feet per second. Each valve shall be given a hydrostatic and seat test with the test results being certified.

2.03 GATE VALVES - 3 INCHES OR SMALLER
Gate valves 3-inches and smaller shall be bronze-bodied, have wedge discs with full-open ports, rising stems, threaded ends, and rated 125-pounds WSP and 200-pounds WOG. All valves shall be manufactured by the Ohio Brass Company, Mansfield, Ohio or an approved equal.

2.04 GATE VALVES - 4 INCHES OR LARGER

Gate valves shall be Class 150, resilient seat, and shall meet or exceed the requirements of AWWA Standard C509. When specified for underground service, valves shall be suitable for buried service, be equipped with a 2-inch square operating nut and shall open CCW. Unless otherwise shown on the Drawings, valves shall be furnished with flanged or mechanical joints. Valves for above-ground service shall be open stem and yoke, rising stem valves, and equipped with wheel handles.

2.05 CHECK VALVE - SWING TYPE - 3 INCHES AND SMALLER

Check valves 3-inches or smaller shall be bronze-bodied, swing-type brass discs, threaded ends, and rated 125-pounds WSP and 200-pounds WOG. Valves shall be manufactured by the Ohio Brass Company, Mansfield, Ohio or an approved equal.

2.06 CHECK VALVE – GLOBE STYLE, SPRING LOADED, SILENT CHECK

Silent check valves shall be designed with semi-steel bodies, bronze seat, bronze plug, and stainless steel spring. The valve plug shall be center guided at both ends with a through integral shaft and spring loaded for guaranteed silent shut-off operation. The spring shall be helical or conical. The seat and plug shall be hand replaceable in the field for ease of maintenance. The flow area through the body shall be equal to or greater than the cross-sectional area of the equivalent pipe size. Valves shall be APCO Series 600 for 3-inch to 42-inch valves, as manufactured by Valve and Primer Corporation, or approved equal.

2.07 BALL VALVES

Ball valves shall be bronze, Mueller 300 TM Ball Valves, or equal. The valves shall be designed to the test pressures shown on the Drawings.

2.08 GLOBE VALVES

Globe valves shall be Class 150, resilient seat and have outside screw and yokes with rising stem and be equipped with wheel handles. Unless otherwise specified on Drawings, valves shall be furnished with flanges.

2.09 CORPORATION STOPS

Corporation stops shall be ball valves, bronze, as manufactured by Mueller B-25028 or B-20013, Ford FB 500 or equal.

2.10 AIR RELEASE AND VACUUM VALVES

The valves shall be designed to operate under the same test pressures as the pipe to which they are attached. The valves shall have cast iron bodies and covers and stainless steel floats. Float guides, bushings, and linkage shall be stainless steel or bronze. The location, inlet size, and valve type are shown on the Drawings.

Valves shall have flanged or threaded ends to match piping. Seat washers and gaskets shall be of a material ensuring water tightness with a minimum of maintenance.

Valves shall be APCO as manufactured by Valve and Primer Corporation, Crispin as manufactured by Multiplex Manufacturing Company; Empire as manufactured by GA Industries, Inc.; or equal.

A. Air Release Valves

Air release valves (ARV) shall have a small venting orifice to vent the accumulation of air and other gases with the line or system under pressure. Size and capacity shall be as specified on the Drawings.

B. Air and Vacuum Valves

Air and vacuum valves (A&V) shall have a large venting orifice to permit the release of air as the line is filling or relieve the vacuum as the line is draining or is under negative pressure. Size and capacity shall be as specified on the Drawings.

C. Combination Air Release Valves

Combination air release valves (CARV) shall have operating features of both the air and vacuum valve and the air release valve. They include both single- and dual-body construction. Size and capacity shall be as specified on the Drawings.

2.11 PIPE AND FITTINGS (AIR VALVE ASSEMBLIES)

The pipe and fittings shall be minimum Class 150 psi. The 2-inch diameter and smaller pipe shall be steel or brass. Fittings shall be brass or malleable iron. Above-ground pipe and fittings may be galvanized. All pipe exposed to view shall be galvanized.

2.12 BRONZE APPURTENANCES

Unless otherwise specified, all interior bronze parts of valves except gate valve stems, shall conform to the requirements of the "Specification for Composition Bronze or Ounce Metal Castings" (ASTM B62). Gate valve stems shall be of bronze containing not more than 5-percent of zinc nor more than 2-percent of aluminum, and shall have a minimum tensile strength of 60,000 psi, a yield strength of 40,000 psi, and an elongation of at least 10-percent in 2-inches, as determined by a test coupon poured from the same ladle from which the valve stems to be furnished are poured.

2.13 FLANGES

The flanges of valves shall be plain faced and shall have a pressure rating equal to or greater than the pressure class of the adjoining pipe. Flanges of valves for water-working pressures of 175-psi or less shall be faced and drilled to 125-lb. American Standard template. Flanges of valves for water-working pressures greater than 175-psi shall be faced and drilled to 250-lb. American Standard template.

2.14 BOLTS, NUTS, AND GASKETS

Flange gaskets shall be in accordance with applicable parts of ANSI B16.21 and AWWA C207. Gaskets shall be 1/8-inch thick rubber manufactured by U.S. Pipe. Bolts and nuts for joints shall be carbon steel, ASTM C307, Grade A, hex head, and shall conform to AWWA C207.

2.15 VALVE JOINTS

Joint materials for mechanical joint or push-on joint for ductile iron pipe shall conform to AWWA C111. Joint materials for flanged joints shall consist of 1/8-inch thick rubber gaskets, rubber manufactured by U.S. Pipe conforming to Section 2 of AWWA C207. Bolts and nuts shall conform to Section 2 of AWWA C207.

2.16 VALVE OPERATORS

Valve operators shall be of the ACME screw, traveling-nut type, sealed, gasketed, and lubricated for underground service. The operators shall be designed to meet the input torque requirements of AWWA C504 with a maximum pull of 80-pounds on a handwheel and a maximum input of 150 foot-pounds on an operating nut. They shall be capable of withstanding an overload torque of 450 foot-pounds at full-open or full-closed position without damage to the valves or valve operators. They shall be designed to resist submergence in water to 10-foot head pressure.

All valves shall open counterclockwise (CCW). All buried valves shall be equipped with a 2-inch operating nut. Operating nuts shall comply with the requirements of AWWA Specification C500, where applicable.

2.17 VALVE OPERATING EXTENSION

A valve operating extension shall be required whenever the valve is installed such that the operating nut is more than 32-inches below finished grade. The valve operating extension shall be constructed of steel with a 2-inch square-operating nut and include a centering ring.

2.18 WATER VALVE BOXES

Water valve boxes shall be Christy G-5 or South Bay B-20, having a cast iron face and cast iron traffic lid. Covers shall be marked "WATER", and shall have a loose fit in the box. Valve box risers shall be fabricated from 8-inch diameter SDR PVC pipe.

2.19 DRAIN VALVE BOXES

Drain valve boxes shall be Christy B-48 utility boxes or equal. Valve boxes shall be high-density reinforced concrete with non-settling shoulders. Covers shall be 2-piece reinforced concrete. Valve box risers shall be reinforced concrete.

2.20 DRAIN ROCK

Drain rock shall be crushed rock as specified in Section 02300-EARTHWORK.

2.21 BACKFLOW PREVENTION ASSEMBLY

The backflow prevention assembly shall comply with AWWA C506, shall be of the reduced pressure principle type, and shall consist of a dual check valve assembly with reduced pressure zone between the check valves. A tight-closing shutoff valve shall be provided on each end of the device. Backflow preventers in 2-inch and smaller sizes shall be Wilkins Model 975, Febco 825Y or Watts, with bronze body and threaded end connections, or equal

2.22 PUMP CONTROL VALVE

The pump control valve shall be 150 pound class rating, with flanged ends, Cla-Val Model 661-02.

Size of the valve is shown on the plans. The valve shall be a diaphragm-actuated, single-seated, composition disc, hydraulically operated valve. The diaphragm assembly containing a valve stem shall be fully guided at both ends by a bearing in the valve cover and an integral bearing in the valve seat. The diaphragm assembly shall be the only moving part, and shall form a sealed chamber in the upper portion of the valve for valve operation. The diaphragm shall consist of a nylon fabric bonded with synthetic rubber and shall not be used as a seating surface. Control of valve operation shall be by means of an externally mounted solenoid pilot valve. External packing glands or stuffing boxes are not permitted in the main valve. Pressure from the system side of the check valve shall be used for pilot valve operation. A micro-switch shall be installed to control the pump circuitry. The valve shall be fitted with ¼-inch ball valve isolation valves, a position indicator post, pressure gages on the inlet and outlet ports, and external wye strainers on the pilot system. All necessary repairs shall be possible without removing the valve from the mainline. Per the electrical drawings, the valve shall be equipped with two limit switches that are capable of indicating whether the valve is opened or closed.

2.23 PRESSURE GAUGES

General purpose pressure gauges shall be 2 ½-inch diameter, 304 stainless steel bodied, have a shatter-resistant glass window, have a 304 stainless steel white background dial with black markings, an adjustable stainless steel black pointer with the movement and bourdon tube made of 300 series stainless steel. The gauge shall be fitted with ¼-inch ANPT stem mount and shall be liquid filled with 200 cs silicone oil. The dial range shall be from 0 to 160 pounds per square inch with 10-pound intermediate graduations, unless otherwise specified. Pressure gauges shall be equipped with a bleed cock.

2.24 COATINGS

The interior of valves, unless of non-corrosive materials, shall be coated with the standard manufacturer's coating, except for fabricated steel components. The interior fabricated steel components of valves and the exterior of all valves shall be coated in accordance with Section 09900-PAINTING.

2.25 FLOW METERS

The flow meter shall be a self-contained, obstructionless, volumetric, magnetic flow meter and shall be of the same diameter of the discharge station piping. The unit shall be complete with an instantaneous flow indicator in gallons per minute, six-digit straight reading totalizer, and register transmitter assembly for transmitting dual 4-20 ma signals and a pulse rate output signal proportional to the rate of flow for telemetry purposes. Additionally, the meter shall be equipped with an amplifier and digital remote readout location without splicing. Accuracy shall be plus or minus 2-percent for each particular installation. Register shall indicate instantaneous flow rate in gallons per minute and cumulative flow in 1000 gallons. Flow meter shall be field calibrated. The meter shall be capacble of The Contractor shall furnish a remote readout As there is no known equal, the meter shall be the UltraMag, Model Mx UltraMag as manufactured by McCrometer.

2.26 FIRE HYDRANTS

See Owner Standards.

2.27 PRESSURE REDUCING VALVES

Pressure reducing valves shall be bronze bodied and suitable for inlet water pressures up to 300 psi. The combined metal components of the valve contacted by potable water shall contain less than one half of one percent (0.5%) lead by weight. Valve shall be Watts Regulator Company Series LF 25AUB-Z3.

2.28 FLOW CONTROL VALVES

Flow control valves shall be bronze bodied with Type 304 stainless steel cartridge and stainless steel spring, rated at 250 psi. The valve shall be manufactured by Griswold Controls, Model 3528FA.

2.29 WATER SERVICE METERS

A. Meter Setters
See Owner standards

B. Meter Boxes
See Owner standards

C. Water Meters
Water meters to be furnished and installed by District at no cost to Contractor.

PART 3 - EXECUTION

3.01 GENERAL

Valve-operating units, stem extensions and other accessories shall be furnished and installed by the Contractor where shown, or where required in the opinion of the Engineer to provide for convenience in operation. Where buried valves are indicated, the Contractor shall furnish and install valve boxes to grade. All valves shall be new and of current manufacture.

Provide coating for all buried valves, flange joints and couplings as follows:

1. Buried Nuts and Bolts: All buried nuts, bolts, washers, tie-rods shall be type 316 Stainless Steel. Provide suitable anti-gauling compound to reduce gauling.

3.02 VALVES

Before installation, the valves shall be thoroughly cleaned of all foreign material, and shall be inspected for proper operation, both opening and closing, and to verify that the valves seat properly. Valves shall be installed so that the stems are vertical, unless otherwise directed by the Engineer. Jointing shall conform to AWWA C600 or AWWA C603, whichever is applicable. Valves shall be installed as depicted on the Drawings. Joints shall be tested with the adjacent pipeline. If joints leak under test, valves shall be disconnected and reconnected, and the valve and/or the pipeline retested.

Faces of flanges shall be cleaned thoroughly before flanged joint is assembled. After cleaning, the gasket shall be inserted and the nuts tightened uniformly around the flange. If flanges leak under test, the nuts shall be loosened, the gasket reset or replaced, the nuts retightened, and the valve and/or pipeline retested.

3.03 VALVE BOXES

Center the valve boxes and set plumb over the wrench nuts of the valves. Set valve boxes so that they do not transmit shock or stress to the valves. Set the valve boxes and covers in accordance with the Drawings. Cut stem extensions to the proper length so that the valve box does not ride on the stem extension when set at grade.

Backfill for water valve boxes shall be the same as specified for the adjacent pipe. Backfill drain valve boxes with drain rock as shown on the Drawings. Place backfill around the valve boxes and thoroughly compact to a density equal to that specified for the adjacent trench and in such a manner that will not damage or displace the valve box from proper alignment or grade. Misaligned valve boxes shall be excavated, plumbed, and backfilled at the Contractor's expense.

3.04 VALVE TESTING

Refer to Section 15950-PERFORMANCE TESTING AND FACILITY STARTUP for additional requirements. All valves shall be tested. Test valve operation under full design pressure. Valves may be tested while filling the pipe for hydrostatic testing or as a separate step. Pump station valves must open and close smoothly with full design pressure on upstream side and atmospheric pressure on downstream side. Test mainline valves for smooth operation will full design hydrostatic pressure on both sides of valve.

After hydrostatic test, operate all drain valves under design static hydraulic pressure to verify that they operate correctly. Valves must open and close smoothly and seat watertight. Repair all defective drain valves and retest at design static hydraulic pressure. Additional drain rock and erosion control may be required based on actual flow patterns.

During filling, check all air and vacuum valves to verify that they are operating correctly. Operate all service valves (but not isolation valves) on air and vacuum valves, under design hydrostatic pressure to ensure that they open and close smoothly. Repair any defective valves.

PART 4 – MEASUREMENT AND PAYMENT

Valves and appurtenances shall be paid for on a Lump Sum basis as stated in the **Bid Item Schedule** for the items listed below:

Bid Item No. 14 – VALVES AND RELATED APPURTENANCES

-END OF SECTION-

SECTION 15133 – SUBMERSIBLE PUMP COMPONENTS

Bid Item No. 15

PART 1 - GENERAL

1.01 SCOPE

A. This Section covers the work necessary to furnish and install one (1) deep well submersible pump and all specified appurtenances. The pump installation is to include the submersible pump and motor, a surface plate with surface discharge elbow, drop pipe (column pipe) assembly and electrical submersible power cable, complete. The submersible pumps shall be capable of continuous variable speed drive duty.

B. Equipment (materials) shall conform to current standards of the Hydraulic Institute, ANSI/AWWA E101, and NEMA MG-1. Equipment shall be installed in accordance with the Manufacture's recommendations and industry standard practices/procedures.

C. The same pump manufacturer shall furnish the pumps, motors, and other pumping system components described under this Section.

D. The pump shall be furnished and installed by a properly licensed well pump contractor, who is engaged in the full-time business of selling, installing, and the repair of deep well submersible pumps. The installation rig and equipment shall be a standard rig used in the industry, set up and configured for the sole purpose of installing, removing and servicing pumps. All rigging and equipment shall be properly sized to safely accommodate the load.

1.02 OPERATING CONDITIONS

A. The operating conditions for the pump station and pump components are described herein. The pump shall be so designed so that at no point on the performance curve will the pump be in an upthrust condition that exceeds 200 pounds of upthrust. Where the well pump motor is installed in or below a screened section(s) of the well, the Contractor shall furnish and install factory furnished (same as pump manufacturer) motor shroud. The motor shroud will not be required if deemed unnecessary by the motor manufacturer and the manufacturer states in writing that the absence of the motor shroud will not affect the manufacturer's warranty.

B. The well pump can run for prolonged periods of time at run-out during periods of peak demand, fire flow or testing. All furnished equipment shall be designed to operate within the parameters of these conditions.

1.03 SUBMITTALS

A. Contractor shall submit, as part of their bid package, manufacturer copies of equipment data

and dimension sheets, and pump performance curves (Catalog Pump Curve) indicating the manufacturer and model of the equipment being proposed. The Contractor, as part of the submittal process (bid package), shall submit final pump curves (Catalog Pump Curve) performance and one field performance curve, depicting the total dynamic head, input horsepower, efficiency, and net positive suction head requirements over the full range of the pump capacity including shutoff for the pump specified herein. Because the pump will be operated using a variable speed drive unit, the Contractor shall provide a family of performance curves showing 10% speed intervals between 50% speed and 100% speed. Included with the performance curves shall be submittal sheets, which summarize performance characteristics, thrust loadings, all losses (including bearing, column pipe, discharge head losses), and other pertinent data at the design capacity, and include performance at 20 percent above and below the design capacity.

B. Prior to ordering materials, the Contractor shall submit the same pump curve outlined in 1.03A, plus an outline dimension drawing/equipment data sheets, which includes dimensions, lengths, and equipment data for the column assembly, bowl assembly, discharge head, suction assembly, and driver.

C. Prior to the installation of the equipment, the pumps and motors shall be performance tested at the factory after assembly. A minimum of six hydraulic test readings shall be taken between shutoff and 80% and 120% of the BEP. One of these points shall be at the rated capacity. The data shall be plotted on a pump curve showing head, flow, bhp, efficiency, and NPSHR. The pump horsepower demand shall did not exceed the rated name plate motor hp at any point on the curve. Test reports shall be certified by the factory, the results stamped and signed by a Registered Professional Mechanical or Civil Engineer, and sent to the Engineer for review and approval.

D. The Contractor shall submit a report summarizing the field and performance test results. The Contractor is responsible for providing all testing equipment necessary for field and well pump performance testing. The contractor will be required to provide an Engineer approved flow measuring device, such as a recently calibrated Collins Tube, to measure and verify flow rate. All power parameters shall be measured using calibrated meters.

PART 2 – MATERIALS

2.01 DESIGN PARAMETERS

A. All furnished components shall be designed according to the following design parameters:

Design Flow (Gallons Per Minute)	1,200 gpm	1500 gpm	1,800 gpm
Design Head (Feet-Total Dynamic Head)	410 ft.	365 ft.	300 ft.
Minimum Pump Bowl Efficiency	70%	82%	75%
Minimum Overall Plant Efficiency at 1,500 gpm (pump and motor at 100% speed)	72%		
Nominal Motor Speed	1800 RPM		

Pump Setting	260 feet
Minimum Column Diameter	12 inches I.D.
Minimum Motor Efficiency	89%
Shut-off Head (0 flow)	560 feet

2.02 SUBMERSIBLE MOTOR - 200 HP

A. The pump drive motors shall be a submersible, 480 volt, 3 phase, 60 HZ, four-pole, 125 horsepower, squirrel cage induction motor designed for continuous under water duty. Maximum motor diameter shall be not more than 12 inches, have a minimum efficiency at full load of not less than 89 percent and have a 1.15 service factor. The motor shall be rated for operation in a 16-inch diameter well and shall be manufactured by Byron Jackson (Flowserve) or approved equal. The motor shall be an inverter duty type compatible with the variable frequency drive.

B. The motor shall be equipped with a mercury seal, have either a water or oil-filled medium, and shall have a bellows designed to balance the internal pressure with the pressure outside the motor. The water filled type shall be a wet winding design suitable for rewinding. For both mediums, the liquid shall be filtered and circulated throughout the motor and bearings to dissipate heat.

C. The thrust bearings shall be designed to carry the total weight of the rotating element and the hydraulic thrust that the pump may apply in both the up and down direction. The Engineer will evaluate all thrust-bearing designs presented in the interest of obtaining a minimum of 10,000 starts over the life of the motor at a column setting of 260 feet and a static water level of 165 feet.

D. The winding wire insulation shall consist of a material of high dielectric strength and shall be reinforced by a nylon cover. Hermetically sealed or resin encased stators are not acceptable. The insulation resistance shall be not less than 100 megohms or as specified by the motor manufacturer.

E. The rotor shall be statically and dynamically balanced. The rotor shaft shall be fitted with stainless steel sleeves with guide bearings of lead bronze or graphite compound. There shall be a minimum of two guide bearings supporting the rotor.

F. All exposed parts shall be protected against corrosion by an epoxy coating that conforms to NSF 61 requirements for substances in contact with potable drinking water. The complete unit shall be painted after assembly. Any scratches or gouges in the coating shall be field-patched.

2.03 DEEP WELL SUBMERSIBLE PUMP

A. The submersible pump unit shall be designed for use with a motor assembly designed for continuous submerged operation. The pump and motor shall be manufacturered by Byron

Jackson or approved equal. It shall be furnished without a check valve installed at the bottom of the discharge column. The pump shall have a capacity and efficiency matching the operating conditions defined above and have a maximum nominal diameter of 12 inches. The pump (including motor) shall be designed to operate continuously at any point throughout the complete capacity-head range with short operational periods at shut-off or prolonged periods at runout during tests or fire flows.

B. The pump stage casings, suction and discharge housings shall be of pore-free, close grained cast iron having a minimum tensile strength of 30,000 psi and shall have either porcelain enamel or fusion epoxy coated water passages. Impellers shall be bronze cast in one piece, accurately machined, enclosed, underfiled, slurry or hand polished to 60 microns rms and statically and dynamically balanced (ISO 19-40 Grade 6.3). Impellers shall be secured to the pump shaft with tapered collets of 416 stainless steel.

C. The pump shaft shall be of Type 416 stainless steel, turned, grained and polished. It shall be supported by bronze bearings above and below each impeller. The motor coupling shall be constructed of Type 416 stainless steel, either keyed or splined as required to fit the motor shaft.

D. The top case of the bowl assembly shall contain an extra long bronze sleeve bearing surrounded by a grease chamber and filled with a special hydraulic grease with a life of fifteen years. A stainless steel strainer and water intake shall be built into the lower part of the bowls in which shall be mounted two long bronze guide sleeve bearings.

2.04 SUBMERSIBLE CABLE

A. Submersible cable shall be sized to limit the voltage drop to 3 percent at the motor's terminals. The cable shall be round, jacketed 3 copper conductor cable plus a ground and have a minimum size of #4/0. Each conductor shall be jacketed, and the conductors and a ground wire shall be included in a single jacketed assembly. The conductor insulation shall be water and oil resistant, rated for a 1000 volts AV minimum, and be specifically designed for submersible pump service with continuous immersion. The length of the cable to be furnished shall be the sum of: (a) total pump setting plus the bowl unit length, plus (b) one foot for each 50 feet of setting to compensate for possible twist or sag during installation, plus (c) five feet between the surface plate and the well head junction box. The cable will be suitably supported from the column, and shall be protected by a non-galvanized, epoxy coated steel cable guard for the entire bowl length. All cable fittings and terminals shall be water tight at the pressure encountered in the application. The cable jacket shall be neoprene.

2.05 SURFACE PLATE & DISCHARGE ELBOW

A. The surface plate shall be fabricated from steel with a flat face base flange the diameter of which shall be a minimum of the casing diameter plus 3-inches, short radius 90 degree steel elbow ending in a 150# raised faced steel discharge flange. The surface plate shall be fitted with a properly sized electrical junction box, be equipped with a two, 1.5-inch diameter NPT

taps for casing access. It shall also be provided with lifting lugs of sufficient strength to lift the entire pump and motor assembly including the drop pipe. A short threaded nipple shall extend below the surface plate for connection to the riser pipe. The surface plate shall be sealed with a 1/8-inch neoprene gasket followed with silicon sealant.

2.06 COLUMN PIPE - 12 INCH

A. The total length of the discharge column for the pump shall be 260 feet. The column pipe shall be 12.750 inch O.D. by 0.330 wall (Schedule 30), steel pipe, and shall conform to American Standard tapered pipe thread specifications. The pipe shall be furnished in interchangeable sections not over 20 feet in length, and shall be connected with threaded, sleeve-type couplings.

2.07 WATER LEVEL MEASURING EQUIPMENT

A. Pressure Transducer

The Contractor shall furnish and install a pressure transducer with cable to the pump setting depth of 260 feet plus any required additional cable to connect to the above-ground electrical motor control center. Each transducer and cable is to be installed in the 2-inch sounding pipe as shown on the Drawings. Refer to the Electrical Specifications, Section 16940 – INSTRUMENTATION for transducer, cable, and process controls requirements. The assembly shall be capable of indicating a depth to water level surface range from ground surface to 260 feet.

PART 3 – EXECUTION

3.01 GENERAL

A. The submersible pump shall be installed in accordance with the manufacturer's written recommendations submitted and approved with the shop drawings and in accordance with the Contract Documents.

B. The manufacturer's authorized service representative shall visit the site for as long as necessary to complete the following and to certify in writing that the equipment and controls have been properly installed, aligned, lubricated, adjusted, and readied for operation. The manufacturer's authorized service representative shall:

1. Witness the proper installation of the equipment.

2. Witness the inspection, checking, aligning and adjusting the equipment.

3. Witness startup and field-testing operations, and efficiency testing.

4. Instruct the District's personnel in the operation and maintenance of the equipment, including step-by-step troubleshooting with necessary test equipment. Instruction and

materials shall be specific to the models of equipment provided. The representative shall have at least two year's experience or training with equipment provided.

3.02 INSTALLATION

A. The submersible pump and motor components shall be installed in accordance with the pump manufacturer's recommendations for proper handling and installation of submersible deep well pumps. Among these requirements are frequent tests to ensure the integrity of the installed components. Testing will be preformed by the Contractor and witnessed by the Engineer. The Contractor is responsible for providing all equipment necessary for testing. The following tests are required:

1. The well is to be sounded for total depth and static water level.

2. The factory assembled pump and motor assembly shall be lifted into the vertical position before uncrating. A properly licensed contractor who is engaged in the full-time business of selling, installing, and repairing submersible pumps shall install the pumps. The installation rig and equipment shall be an industry rig, set up and configured for the sole purpose of installing and removing service pumps. All rigging and equipment shall be properly sized to safely accommodate the load. If the pump is disassembled for installation, a factory representative acceptable to the Engineer shall be present to ensure proper re-assembly.

3. Before splicing the power cable to the motor, the motor shall be tested by attaching 1 lead from a resistance instrument to any one motor lead and other lead to the motor frame. All 3 leads shall be separately tested. The minimum reading at normal room temperature shall be at least 500 megohms, or as specified by the motor manufacturer.

4. Only one cable splice shall be permitted in each power cable run. The splice shall be performed using cable connectors sized to fit the cable. The method of splicing shall be subject to the approval of the Engineer.

5. Before lowering the pump, a 500-volt megger shall be connected to the end of one of the power cables and to the pump motor casing and the insulation resistance measured. Wet down the cable splice by immersing in a bucket of water before megging. The cable and motor shall not be installed if they meg less than 100 megohms, or as specified by the motor manufacturer.

6. Correct rotation of the motor shall be verified prior to the pump and motor installation.

7. The power cable shall be banded to the column pipe just above each coupling as the unit is lowered into the well. The first band should be placed within 3 feet of the pump while the last band should be within three feet of the surface plate. 3/4 stainless steel banding shall be used with a rubber cable protector installed between the band and power cable.

8. The Contractor shall insure that all column joints are securely tightened as each joint is installed to prevent loosening of the joints on pump start-ups.

9. As the pump is installed, the well pump shall be sterilized by spraying the components, as they are installed, with a 50 part per million sodium hypochlorite solution. Any components that will remain above the static water level shall not be sprayed with the chlorinated solution. After the pump is installed, the well shall be chlorinated in accordance with the Section 15145 – DISINFECTION OF WELL, PUMP, AND PIPING.

10. Megger readings shall be taken after each joint of column is installed in the well, once the motor has reached the water table and has become submerged. One line from the megger shall be attached to the power cable and the second line attached to the pump column. Each power lead shall be tested. If readings lower than 100 megohms, or as recommended by the motor manufacturer, are experienced, the unit shall be pulled and corrective actions taken to insure a proper installation.

3.03 Field Tests

A. The Contractor shall be responsible for field testing all pumps after installation to demonstrate satisfactory operation. All testing shall be witnessed by a representative of the District. The Contractor shall notify the District, five (5) days in advance of the field tests. The Contractor shall bear all costs of field tests, including related services of the Manufacturer's representative, except for power and water.

B. The Contractor shall be responsible for field testing to check for any deviation from rated voltage, phase or frequency; efficiency, or improper installation.

C. The Contractor shall operate the pump and measure the capacity and total dynamic head at the 100% pump speed for three different capacities (the capacity shall be at the specified design capacity and at +/- 10% of the specified design capacity). The pump is to be run a minimum of 10 minutes at each capacity. For acceptance purposes, the total measured head shall be within 15 feet, above and/or below, that shown on the manufacturer's pump curve.

D. The Contractor shall conduct a minimum of four additional tests while the well pump is operating under different pump speeds to meet discharge pressure conditions as directed by the Engineer.

E. The Contractor shall use the field test results and calculate the overall plant efficiency (OPE). The minimum overall plant efficiency shall meet the minimum design OPE referenced in section 2.01.

F. The Contractor shall provide a submittal summarizing all field test results.

G. In the event of failure of any pump and or pump motor to meet any of the design

requirements or efficiencies provided in the drawings, plans or the approved submittal, the Contractor shall make all necessary modifications, repairs, or replacements, and conduct field tests to conform to these specifications at no additional compensation from the Owner.

3.04 DISINFECTION

A. The submersible pump components shall be disinfected prior to placing into service. See Section 15145-DISINFECTION OF PUMPS AND PIPING for requirements.

3.05 WARRANTY

A. The Contractor shall provide a full warranty on all materials and installation for a period of three years from date of start up. In the case of non-compliance with the stated specifications, District may require Contractor to repair the pump unit, including parts and labor to make repairs, up to and including removal and replacement of all or part.

PART 4 - MEASUREMENT AND PAYMENT

For all work specified herein, satisfactorily completed, including furnishing and installing one (1) complete submersible pump including motor, surface plate and discharge elbow, drop pipe assembly, and electrical submersible cable, complete, shall be paid for on a Lump Sum basis as stated in the **Bid Item Schedule** for the items listed below:

Bid Item No. 15 SUBMERSIBLE PUMP COMPONENTS

-END SECTION-

Sacramento Suburban Water District – Verner Ave. Well and Treatment Facilities
VFD Pump Field Test Data

Well Site A, B or C (Circle One)

Date Tested:_____

Performed by:_____(Contractor)

Witnessed by:_____(Engineer)

Static Water Level:_____

Wait 20 minutes after starting the pump before taking Test 1 readings.

All field test measurements shall be read from the panel <u>and</u> compared to head measurements.

	Drive Readings (Read from Panel)						
Test	**Voltage (Volts)**	**Current (Amps)**	**Freq. (Hz)**	**Power (HP)**	**Flow (gpm)**	**Discharge Pressure+ (psi)**	**PWL (feet)**
1						100	
2						105	
3						110	
4						115	

	Readings Taken By Hand						
Test	**Voltage* (Volts)**	**Current* (Amps)**	**Freq.* (Hz)**	**Power* (HP)**	**Flow** (gpm)**	**Discharge Pressure+ (psi)**	**PWL*** (feet)**
1						100	
2						105	
3						110	
4						115	

* Readings taken at the pump by hand
** Readings from the flowmeter
*** Readings taken with the use of a water level sounder apparatus
+ Pressure readings taken from pressure gage located as close as possible to well pump discharge head.

SECTION 15145 – DISINFECTION OF WELL, PUMP, AND PIPING

Bid Item No. 17

PART 1 - GENERAL

1.01 SCOPE
This Section covers the work necessary to disinfect the well, pump, and water mains as described herein, complete.

PART 2 - MATERIALS

2.01 DISINFECTANT
Disinfectant shall be liquid sodium hypochlorite (chlorine) at 12.5-percent available, for the well, pump. Liquid sodium hypochlorite shall be used to disinfect the water mains.

PART 3 - EXECUTION

3.01 DISINFECTION OF WELL AND PUMP
Prior to the installation of the well pump, the Contractor shall add sufficient liquid sodium hypochlorite (at 12.5-percent available) to achieve a 500 part per million solution in the well, (based upon casing volume). The Contractor shall then run a disinfected (chlorine sprayed) bailer into the well and mix the solution by agitation. The Contractor may then proceed with the installation of the pump, after the pump has been washed down with a hot water high-pressure cleaner. A solution containing trisodium phosphate maybe required as a cleaning agent if extraneous cleaning measures are required by the Engineer.

3.02 DISINFECTION OF WATER MAINS
Tablets shall not be utilized for the disinfection of water mains. An optional method, outlined in Section 4.4.3 of AWWA Standard C651-99, utilizing a liquid sodium hypochlorite method only, shall be employed. The Contractor will furnish the Engineer, for approval prior to the work, a work plan depicting methodology, chemicals, and equipment to be employed in the disinfection process.

A. Retention Period

Chlorinated water shall be retained in the pipeline long enough to destroy all non-spore-forming bacteria. This period shall be a minimum of 24-hours. After the sodium hypochlorite treated water has been retained for the required time, the chlorine residual at the pipe extremities and at the other representative points shall be a minimum of 50 ppm.

B. Chlorinating Valves

During the process of chlorinating the piping and pipelines, all valves and other appurtenances shall be operated while the pipeline is filled with the heavily

chlorinated water.

C. Final Flushing

Following chlorination, all treated water shall be thoroughly flushed from the pipes and pipelines until the replacement water shall, upon testing, both chemically and bacteriologically, be proven equal to the water quality at the point of supply. Chlorination shall be repeated, if necessary, by the Contractor at no additional cost to the Owner, if the replacement water does not prove equal to the water quality at the point of supply. The Contractor shall properly dispose of flush water in a manner that will not cause damage and nuisance to the environment. Flush water shall be disposed to the nearest existing and operating sewer manhole after obtaining a necessary permit from the Sacramento Regional County Sanitation District (916) 875-7000.

3.03 DISINFECTION OF CHEMICAL FEED SYSTEMS

The process piping and chemical feed systems shall be thoroughly cleaned and disinfected prior to placing, in service in accordance with AWWA C653.

3.04 BACTERIOLOGICAL TESTS

After final flushing and before the facilities are placed in service, water mains shall be sampled by the Owner and tested for coliform organisms and iron bacteria in accordance with "Standard Methods for the Examination of Water and Wastewater."

A. Samples shall be collected by the Owner from the downhill end of the water main. No hose or fire hydrant shall be used in collection of samples.

B. Final test results shall show the absence of coliform organisms.

C. The Owner will conduct the laboratory tests at no cost to the Contractor. If the initial disinfection fails to produce satisfactory bacteriological samples, the Engineer shall evaluate the situation prior to directing the Contractor to take any corrective actions.

D. The Contractor shall be responsible for any time delay and pay all costs incurred for retesting and any corrective actions taken.

PART 4 - MEASUREMENT AND PAYMENT

The disinfection of well, pump, and piping satisfactorily completed, shall be paid for on a Lump Sum basis stated in the **Bid Item Schedule** as listed below:

Bid Item No. 17 - DISINFECTION OF WELL, PUMP, AND PIPING

-END OF SECTION-

SECTION 15950 - PERFORMANCE TESTING AND FACILITY STARTUP

Bid Item No. 18

PART 1 - GENERAL

1.01 SCOPE

This Section covers the acceptance tests of the hydraulic efficiency and mechanical operation of the pumping equipment, piping, and water system complete. Refer to Division 16 for additional system testing requirements.

1.02 GENERAL

A. System Commissioning

Commission all systems and equipment to verify performance, function, and correct operation by performing procedures to activate, startup, adjust, test, and demonstrate that the work is in operating order in accordance with the general requirements of this Section and the detailed requirements of the technical sections under the system or equipment specified. Ensure that the work is ready for full-testing, documentation, inspection by equipment manufacturers and operator training, where specified.

B. Notification

Notify the Engineer five (5) working days prior to starting the system or well pump/station.

C. Coordination

During the startup period, coordinate the operation of the facility with the Engineer, subcontractors, Owner's operators, and manufacturer's representatives.

D. Testing

Furnish all test equipment, measuring devices and supplies required to conduct tests.

E. Equipment Maintenance

Maintain the equipment until acceptance. Provide all lubricants, chemicals, and electricity necessary until acceptance.

F. Expendable Supplies

Furnish all expendable supplies, gas, water, chlorine, etc., required for startup, demonstration and testing and dispose of all waste or used supplies, water, etc., in accordance with all applicable local, state, and federal regulations.

1.03 SUBMITTALS

A. Startup Plan and Schedule
Startup Plan, Forms, and Schedule: Prepare a facility startup plan and schedule and submit to the Engineer for review ten (10) working days prior to facility start-up. The plan shall include test methods and procedures and sample forms for recording test data. In particular the schedule shall show all anticipated shutdown times of the existing facility.

B. Facility Shut Down
The Contractor shall notify the Owner three (3) working days prior to any shut down of the existing facility and shall coordinate with the District to ensure minimal disruption of service to the community.

C. Testing Documentation
Submit three (3) copies of documentation of each test to the Engineer.

PART 2 - MATERIALS

2.01 GENERAL
The Contractor shall furnish all necessary personnel and testing equipment to accurately determine the hydraulic efficiency and mechanical operation of the pumping, piping, and all other equipment as required.

PART 3 - EXECUTION

3.01 PUMPING EQUIPMENT TESTING PROCEDURES
Acceptance tests will be conducted after installation of the pumping equipment, station piping, and pipelines. Refer to Section 15130-VERTICAL TURBINE PUMP COMPONENTS for additional requirements. The Contractor shall notify the Engineer when the equipment is ready for testing. Tests and acceptance include:

A. The test for pumping equipment consists of:

1. Measure the static voltage "leg to leg" and "leg to ground."

2. Measure the static water level.

3. Disconnect the motor leads and using a 1,000-volt megaohm meter, "meg" each lead to check the motor. The measurements are to be within accepted motor manufacturers' tolerances for the specific motor used.

4. Prior to performance of the acceptance tests, start the well pump and allow the

well pump to pump at or within 10-percent of the design capacity. Measure the amperage per leg and the running voltage "leg to leg" and "leg to ground." Stop the pump and "roll" the leads. Start the pump and again repeat the measurements. Repeat a third time. Line balance is to be calculated and the line position with the least "unbalance" used. If the unbalance is not within motor manufacturer's accepted tolerances, the pump is to be shut down and the problem investigated and corrected by the Contractor at no additional cost to Owner, prior to further acceptance testing.

5. Again, start the well pump and measure the capacity, discharge pressure and pumping water level at three different capacities (one capacity shall be at the specified design capacity as selected by the Engineer). The well pump is to be run a minimum of 10-minutes at each capacity. For acceptance purposes, the total measured head shall be within ±20 feet of the manufacturer's published pump curve.

3.02 WATER MAINS AND STATION PIPING TESTING

A. General

Before flushing and disinfection of the main lines, station piping, and appurtenances has been completed, all piping shall be hydrostatically tested, as specified here-in. Hydrostatic testing shall occur after the pipe is backfilled but prior to permanent resurfacing and connection to the existing water system. Valves and other flanged fittings may be left exposed during hydrostatic testing provided sufficient thrust restraint is provided by the Contractor as necessary.

Thrust blocks shall have been in place for a minimum of seven (7) days prior to testing. Pipe with mortared joints shall not be filled with water within twelve (12) hours of the time the last joint has been completed and the interior mortar placed. Do not subject the pipe to internal hydrostatic pressure until all mortared joints have cured at least thirty-six (36) hours.

Separate tests shall be made on pipelines that can be sectionalized by valves. The Contractor shall make all necessary connections and provide all necessary bulkheads, blind flanges, spool pieces, backflow devices, piping and appurtenances, as needed.

B. Isolation

The new pipelines shall remain isolated from the existing water mains until after acceptance of the disinfection and hydrostatic testing. The Contractor shall provide a hydrostatic, disinfection, and bacteriology testing plan complete with locations of bulkheads, or blind flanges, or steel plates or other methods to maintain isolation from the potable water supply, to the Engineer for approval, prior to testing. All isolation equipment shall remain in-place until the new water line has passed the pressure test, passed the chlorination test, passed the bacteriological test and is approved by the Owner for connection.

C. Engineer

All testing shall be performed in the presence of the Engineer.

D. Fill Rate

Fill pipeline at a rate of two (2) feet per second so as not to cause any surges or exceed the rate at which air can be released through the air valves. During filling, check all air valves to verify that they are venting correctly. After pipe has been filled and all of the air purged, the pipe may be tested without a waiting period.

E. Pipe Test

Test each pipe section with all mainline valves open. Provide bulkheads or dishhead terminations at each end of test section as necessary for testing.

F. Test Pressure

Pipeline and mainline valves shall be tested at a pressure of 150 pounds per square inch. The pressure gage reading at the time of test shall be located at the highest point of the section of pipe being tested. A blind flange shall be utilized at the connection to any pump discharge heads. Test pressure shall be maintained for a period of two (2) hours. Apply and maintain the test pressure by continuous pumping if necessary for the entire test period. The pump suction shall be in a barrel or similar device or metered such that the amount of water required to maintain the test pressure may be measured accurately. The Engineer shall reserve the right to evaluate test pressure at any point along the section being tested. All visible leaks from the piping, valves, flanges or gaskets shall be repaired. Upon satisfactory completion of any pressure test, the Contractor shall immediately relieve the pipeline of test pressure.

G. Allowable Leakage

Leakage is defined as the quantity of water required to hold the test pressure for the duration of the test period. No leakage is allowed in sections of welded steel pipe with welded joints. Pressurized water mains with rubber gasket joints, such as bell and spigot or dresser couplings shall be pressure and leakage tested in accordance with the Sacramento Suburban Water District Standards.

H. Correction of Defects

If the leakage exceeds the allowance, the installation shall be repaired or replaced and pressure tests shall be repeated until conformance to the leakage test requirements specified herein have been met. All visible leaks from the piping, valves, flanges or gaskets shall be repaired even if the pipeline passes the allowable leakage test. All work associated with finding and fixing leaks and performing additional testing shall be performed at no additional cost to the Owner.

I. Contractor's Report

The Contractor shall keep records of each piping test, including:

a. Description and identification of piping tested.

b. Description of test procedure.
c. Date of test.
d. Witnessing by Contractor and Engineer.
e. Test evaluation.
f. Remarks, to include such items as;
    1) Leaks (type, location).
    2) Repairs made on leaks.

3.03 MAINLINE VALVES, BLOW-OFF VALVES, AIR/VAC VALVES, AND FIRE HYDRANT TESTS

All valves shall be tested. On all valves count and record the turns required to operate from full open to full closed and record on as-built drawings.

A. Mainline Valves

Test each mainline valve by pressurizing each section between valves after completion of the pipe pressure test. Check the proper operation of valves by demonstrating smooth operation under full design hydrostatic pressure.

B. Blow-Off Valves

After hydrostatic test, operate all blow-off valves under design static pressure to verify that they operate correctly. Valves must open and close smoothly and seat watertight. Repair all defective blow-off valves and retest at design static hydraulic pressure.

C. Air/Vac Valves

During filling, check all air/vac valves to verify that they are venting correctly. Operate all service valves (but not isolation valves) on air/vac valves, under design hydrostatic pressure to ensure that they open and close smoothly. Repair any defective valves.

D. Fire Hydrants

After hydrostatic test, operate all hydrants under design static pressure to verify that they operate correctly. Hydrants must open and close smoothly and seat watertight. Repair all defective hydrants and retest at design static hydraulic pressure.

3.04 MISCELLANEOUS PUMP STATION PIPING

All piping including water, chemical, and all other miscellaneous piping shall be tested for leakage in accordance with the California Plumbing Code Sections 103.5.1.1, 103.5.1.3, 103.5.3.5, 103.5.6.2, 609.4, and 712.0.

3.05 STORM DRAINAGE AND OVERFLOW SYSTEM TESTS

The storm drain and overflow piping, shall be tested for leakage in conformance with the Sacramento County Standard Construction Specifications, Section 38-10, except that television inspection will not be required. Any detectable leaks shall be repaired, regardless of the results of the tests.

3.06 MANHOLES
All storm drain and overflow manholes shall be tested and meet the requirements of ASTM C1244, prior to acceptance by the Engineer.

3.07 SANITARY SEWAGE SYSTEM TESTS
The sanitary sewer system shall be tested in accordance with the Sacramento Regional County Sanitation District Standards.

3.08 ELECTRICAL
All electrical equipment shall be tested including time delays, automatic and hand operation of the pumping plant, fans, and thermostats. Refer to the applicable Electrical sections for additional testing requirements.

3.09 TRACING WIRE CONTINUITY CHECK
Check continuity of all tracing wire, connection and splices and repair as necessary.

3.10 INITIAL STARTUP AND OPERATION OF THE FACILITIES
The Contractor shall coordinate initial startup and operation with the Owner. The following listing is a general sequence of startup activity steps to be used in placing facility systems into operation:

1. Perform initial lubrication of equipment and have manufacturer check and adjust equipment. Provide all subsequent lubrication and maintenance, and such staff as required for test operations.

2. Perform satisfactory testing of electrical work required prior to energizing of the electrical system.

3. After completion of Step 2, perform satisfactory electrical testing required after energizing of the electrical system.

4. Complete calibration of instruments.

5. Satisfactorily complete system verification of instrumentation work.

6. After completion of Steps 1, 2, and 3, perform a rotational test of equipment and correct backward rotating drives.

7. After completion of Steps 5 and 6, test operate the equipment by manually initiating the operation. Where manual operation bypasses alarm or safety monitoring, provide continuous supervision of such parameters.

8. Concurrent with Step 7, perform instrumentation and control testing and make necessary adjustments as related to the equipment being tested.

9. Concurrent with Step 7 and where possible at this stage of startup, complete the performance testing specified for the equipment.

10. Concurrent with Step 7, perform adjustments of the electrical work as related to the equipment being tested.

11. Repeat Steps 1 through 10 required for other equipment items and plant systems until all plant process components and utility systems are ready for total facility operation.

3.11 TRAINING

A. Submit four (4) copies of the Operation and Maintenance Manuals and Parts Lists to the Engineer a minimum of fifteen (15) days prior to the first training session.

B. Provide up to eight (8) hours of onsite demonstration of systems equipment.

   1. Illustrate training with diagrams, checklists, photographs and other visual aids as appropriate.

   2. Prepare a course summary illustrated with copies of visual materials. Distribute one (1) copy to each course attendee and submit four (4) copies to the Engineer.

   3. Demonstrate the operation, maintenance and safety procedures for all systems and equipment to personnel designated by the Owner.

PART 4 - MEASUREMENT AND PAYMENT

Performance Testing will be paid for on a Lump Sum basis as stated in the **Bid Item Schedule** for the item listed below:

Bid Item No. 18 - PERFORMANCE TESTING AND FACILITY STARTUP

-END OF SECTION-

SECTION 16010 - ELECTRICAL

PART 1: GENERAL

1.01 SCOPE OF WORK

A. The major components to be furnished, installed, tested and placed into operation are:

1. Utility Metering with Main Disconnect, Distribution Section, Generator Breaker, and Panelboard / Transformer section.

2. Well Pump VFD and SSS Control Panel:

3. RTU control panel with Programmable logic controller. This includes configuration, programming and communications of the PLC, OI and SCADA System. Testing shall be a combined effort of the Contractor, System Integrator and Engineer.

4. Coordination and timely installation of critical path equipment and services such that construction may be facilitated. The Electrical Contractor and System Integrator should not assume that submittals, manufacturing, installation, start-up will be based on their own schedule.

5. Conduit, wire, and grounding system, for equipment interconnection, and operation.

6. Installation of Owner furnished instrumentation with mounting supports as detailed and as recommended by the instrument manufacturer. Contractor shall calibrate, configure and test all instrumentation and document results.

7. All necessary process piping, shut off, sample and calibration valves, drains, pressure reducers and calibration equipment for connection of instrumentation.

8. Trenching, backfilling, compaction and resurfacing for all new underground conduit routes, concrete pads, and pull boxes.

9. Coordination and equipment for connection of power utility and telephone services per utility drawings and standards.

10. Site electrical devices, lights and receptacles.

11. Seismic Anchorage Design Calculations and conforming installation.

12. System calibration, testing and documentation.

B. Electro-mechanical equipment to be installed in this project may be specified in other divisions but will be interface to equipment provided under division 16. Obtain submittals for those devices, review, coordinate and provide all interfacing equipment, software, communications, I/O, and testing to integrate the equipment to the extent possible and as intended.

C. Install electrical and control portion of electro-mechanical equipment specified in other sections. Reference those specifications, pertinent details, and follow all manufacturer instructions to erect, install and commission equipment. Furnish all electrical equipment, interconnecting wire, and make connections to place equipment in operation

D. All electrical equipment and materials, and methods - including installation, calibration, and testing - shall conform to the applicable codes and standards listed in this and other Sections. All electrical materials and work shall conform to published standards of the National Electric Code (NEC) 2004 issue, Institute of Electrical and Electronic Engineers (IEEE), and Underwriters Laboratories Inc (UL).

1.02 RELATED SPECIFICATIONS

A. The following specification sections are part of Division 16.

1. Section 16110 – Conduit, Boxes & Grounding.
2. Section 16120 – Wire, Fuses & Terminal Blocks.
3. Section 16250 – Automatic Transfer Switch
4. Section 16470 – Panelboard and Power Transformer.
5. Section 16481 – Variable Frequency Drive.
6. Section 16482 – Solid State Soft Starter
7. Section 16600 – Factory and Field Testing.
8. Section 16905 – Control Panel.
9. Section 16910 – PLC & OI Hardware.
10. Section 16915 – PLC & OI Applications Programming.
11. Section 16925 – SCADA Applications Programming
12. Section 16940 – Instrumentation.

1.03 QUALIFICATIONS

A. Electrical Contractor

1. Management and installation of the entire electrical and control system required for this project shall be by an Electrical Contractor meeting qualifications as defined herein.

2. Electrical Contractor must be competent in performance, supervision and coordination of work required and performed by equipment suppliers and Systems Integrator (Subcontractors).

3. General Contractor shall disclose the proposed Electrical Contractor with bid documents that he intends to use on this project.

4. If the Electrical Contractor listed in bid documents is deemed not qualified by the Engineer, the bids that include that Electrical Contractor will be rejected at the Engineer's sole discretion and the next qualified bidder selected.

5. The Electrical Contractor (EC) shall meet the following minimum qualifications:

   a. Has a current C-10 Electrical Contractor's License.
   b. EC shall have sufficient qualified personnel to staff the project. State law requires that all personnel installing electrical components are certified by the State of California as "Electrician" or "Electrician Trainee." Apprentices may install electrical components only under direct supervision of a certified Electrician.
   c. EC shall be familiar with and understand codes and requirements from NFPA70, NFPA110, and all other local codes as required for work scope as described in the drawings and specifications.
   d. EC shall be regularly engaged in similar electrical contracting for the Municipal Water and Wastewater Industry.
   e. EC shall have successfully performed work of similar or greater complexity on at least twenty previous projects under the present company name.
   f. EC shall be competent with the methods and materials associated in the type of electrical and instrumentation work specified in this Division.
   g. EC shall carry all insurances as defined and required by the special provisions and as required by law.

B. System Integrator

1. Systems Integrator must be competent in performance, supervision and coordination of work required in this contract.

2. This includes, but is not limited to, all work necessary to select, furnish, construct, supervise installation, configure, calibrate, test, and place into operation all transmitters, instruments, programmable controllers, control panels, motor controls, alarm equipment, communications, monitoring equipment, and accessories.

3. The System Integrator shall have on staff a Project Engineer with three years prior experience on similar sized projects. This Project Engineer shall coordinate the technical aspects of this project and prepare the submittals and drawings. The Project Engineer shall attend coordination meetings when specifically requested by the Engineer.

4. The System Integrator (SI) shall meet the following minimum qualifications:

   a. SI shall be regularly engaged providing electrical and control systems for the Municipal Water and Wastewater Industry.
   b. SI shall have an Electrical Engineer on staff registered in the State of California as a Professional Engineer.
   c. SI shall be capable of labeling all electrical panels as manufactured or customized by the System Integrator with appropriate UL label prior to factory testing or shipment to project site.
   d. SI shall have successfully completed work of similar or greater complexity and on similar facilities on at least twenty previous projects under the present company name.
   e. SI shall be actively engaged in designing, selecting, programming and commissioning PLCs, instrumentation, motor controls, and other work specified in this Division for a minimum of five years.
   f. SI shall employ personnel on this project who have successfully completed ISA or equal training courses on general purpose instrumentation.
   g. SI shall have a permanent, fully staffed and equipped service facility within 200 miles of the project site for a minimum of 1 year prior to bid date with personnel and equipment required to maintain, repair and calibrate the instrumentation system.

5. The following company shall be retained by the Contractor as system integrator on this project. The Owner intends to use them due to their familiarity with the installed base of proprietary equipment and proven capabilities on the type of work required on this and on similar projects. No other system integrators will be considered for this project.

   a. Tesco Controls Inc. (916) 395-8800

1.04 CONTRACT DOCUMENTS

A. The resolution of conflicting information within the contract electrical documents shall put precedence on electrical drawings over that of electrical specifications.

B. The Contract drawings and specifications are intended to be descriptive of the type of electrical system to be provided with sufficient detail to construct. Minor omission of detail shall not relieve a qualified contractor from the obligation to

provide a complete operational system if it can be determined that the particular detail is usual and customary for similar systems.

C. The following specifications may incorporate specific equipment or materials that do not have equal equipment listed. These items are standards because of their familiarity, serviceability, and/or spare parts inventory. However, equal alternate equipment or materials (noted in the submittal cover letter) will be considered for use on this project if submitted. The Engineer may reject said equipment for the purpose of adherence to standards.

D. Contract drawings are diagrammatic and indicate general arrangement of systems and equipment, except when specifically dimensioned or detailed. Exact locations of electrical products shall be verified in the field. Field measurements take precedence over dimensioned drawings. Drawing intent is to show size, capacity, approximate location, direction and general relationship of equipment in area shown but not exact detail or arrangement. The requirements or descriptions in the drawings shall take precedence in the event of conflict.

E. The Contractor shall examine the architectural, mechanical, structural, and electrical and instrumentation submittals and equipment furnished under other specifications divisions in order to determine conduit routing, stub-up locations, and final terminations for all conduits and cables. Conduits shall be stubbed up as near as possible to equipment electrical terminals. The exact locations and routing of cables and conduits shall be governed by structural conditions, physical interferences, and the physical location of wire terminations on equipment.

F. All equipment shall be installed and located so that it can be readily accessed for operation and maintenance. If accessibility appears to be compromised, the location of equipment or stub ups shall be modified to the extent possible.

G. Where conduits are shown on the Contract drawings, or stated to be furnished but not explicitly shown, as part of the scope of work; the Contractor shall provide all fittings, boxes, wiring, etc. as required for completion of the raceway system in compliance with the NEC and the applicable specifications in this Section.

H. No changes from the Contract drawings or specifications shall be made without written approval of the Engineer. Should there be a need to deviate from the Contract documents, submit written details and reasons for all changes to the Engineer for review.

I. The Contractor shall maintain a neatly and accurately marked full size set of Contract Drawings recording the as built locations and layout of all electrical and instrumentation equipment, routing of raceways, junction and pull boxes, and other diagram or drawing changes. Drawings shall be kept current weekly, with all "change orders", submittal modifications, and construction changes shown. Drawings shall be subject to the inspection by the Engineer at all times, progress

payments or portions thereof may be withheld if drawings are not accurate or current.

J. When documents are changed, they shall be marked with erasable colored pencils using the following coloring scheme:

Additions - red
Deletions - green
Comments - blue
Dimensions - black

K. Prior to acceptance of the work, the Contractor shall deliver to the Engineer one set of record full size drawings neatly marked accurately showing the information required above.

1.05 UTILITY COORDINATION AND FEES

A. All fees and charges of the Power Utility, SMUD, for design and final connection will be paid by others.

B. Coordinate all work with the Utility for the work shown on Contract Drawings.

1. Unless already completed, apply for electric service within 10 working days from Notice To Proceed.

2. Coordinate and meet with the Utility's Representative at the project site(s) within thirty (30) days after award of contract.

3. Discuss specific installation and comply with Utility requirements. Contact Engineer in the event that Utility requirements far exceed allowances in the plans and specifications. Provide an itemized list of deviations and potential costs or credits.

4. Coordinate and obtain required inspections prior to backfill. Make corrections to installation as required.

5. Coordinate connection and date of service with Utility. Utility back-charges due to mis-coordination or installation problems will be Contractor responsibility to pay and correct.

C. Furnish and install electric service in accordance with the serving Utility's requirements.

1. The contract plans show the preliminary design for the Utility installation. Slight changes required by the Utility do not constitute extra work unless cost impacts in material and labor exceed $5000. In that event, the agreed excess amount will be allowed as a contract change.

2. The Contractor shall provide and install service entrance equipment, all material, conduits, wiring, pull ropes, pole risers, transformer pads, bollards, etc. as shown on Utility design drawings and standards for new power service. Utility standards are available upon request from the Utility or for download from the Utility's website.

3. The Utility will provide and install primary wire, transformer, meter, and connections.

D. Coordinate all work with the serving Telephone Utility for the new telephone service.

1. Provide all the equipment and materials not provided by the telephone Utility Company for permanent service at the locations shown on the Contract Drawings. All work shall meet the requirements of the serving telephone Utility Company.

2. Coordinate all work with the serving telephone Utility. Obtain the required inspections, and schedule when service is required.

3. All telephone company fees and charges associated with the new telephone service will be paid by others.

E. Following award of Contract, schedule all service installations and connections with utilities. Construction or start-up delays as a consequence to lack of documented effort by the Contractor which delay the project completion due to lack of Utility services will not be considered valid and Contract liquidated damages may be assessed.

1.06 PROJECT COORDINATION

A. Upon submittal approval, the Electrical Contractor shall coordinate with equipment suppliers and/or the System Integrator to verify types, sizes, locations, installation requirements, controls and diagrams of all equipment furnished. If there are any issues or coordination requiring Engineer attention, they shall be identified within the letter at this time.

1.07 SUPERVISION

A. The Contractor shall schedule all activities, manage all technical aspects of the project, coordinate submittals and drawings, and attend all project meetings associated with this Section. The Contractor shall coordinate and confirm that the project schedule is being adhered to and all work is being completed within the scheduled time frames.

B. The Contractor shall supervise all work in this Section, including the electrical system general construction work, from the beginning to completion and final

acceptance.

C. The Contractor shall coordinate, obtain, prepare, and/or complete the documentation required within this division. All documentation shall be complete and delivered prior to final acceptance.

1.08 INSPECTIONS

A. General

1. Contract work or materials shall be subject to inspection at any time by the Engineer. If equipment, material, or installation method does not conform to the Contract documents, or does not have a favorably reviewed submittal status and has been determined to be unsatisfactory by the Engineer, then the Contractor shall remove said material from the premises; and if said material has been installed, the entire expense of removing and replacing same, including any cutting and patching that may be necessary, shall be borne by the Contractor.

2. The Engineer may inspect and test the fabricated equipment at the factory before shipment to job site. See Section 16600 for requirements.

3. Work shall not be closed in or covered over before inspection and approval by the Engineer. All costs associated with uncovering and making repairs where non-inspected work has been performed shall be borne by the Contractor.

4. The Contractor shall cooperate with the Engineer and provide assistance at all times for the inspection of the electrical system under this Contract. The Contractor shall remove covers, provide access, operate equipment, and perform other reasonable work which, in the opinion of the Engineer, will be necessary to determine the quality of the work.

B. Milestones requiring inspection and signoff.

1. Underground conduit complete. Do not cover any portion of conduit prior to inspection. Conduits must be labeled with temporary tags per 16110.

2. Factory testing. Coordinate test date with Engineer 2 weeks prior to test scheduled date.

3. Installation of electrical equipment. Equipment is anchored in place, conduit connections are complete, no wire is yet pulled into conduit. Permanent conduit tags must be in place per 16010.

4. Wire termination complete. Do not energize equipment. All wire tags must be installed and wires terminated per 16120. Pre-energization testing

to commence after inspection.

5. Testing per 16600. All testing per 16600 shall be witnessed unless specifically declined by the Engineer. Schedule tests with Engineer 2 weeks prior to test date.

6. Start-up per 16600. Schedule tests with Engineer 2 weeks prior to test date.

7. Punch list – final inspection. Schedule final walkthrough with Engineer one week prior to intended project completion date. All items on punchlist must be complete prior to scheduling walk-through.

1.09 JOB CONDITIONS

A. Construction Power and Telephone Service

1. The Contractor shall coordinate, furnish and install, temporary utility services required during construction of the project, such as temporary electrical power and telephone service. Temporary services shall be installed in accordance with the applicable codes and regulations of the serving utilities.

2. Upon completion of the project, remove temporary services. All equipment and material shall be the property of the Contractor.

B. Equipment Storage

1. The Contractor shall provide adequate protection for all equipment and materials during shipment, storage and construction.

2. Equipment and materials shall be completely and sufficiently sealed and covered and set on a pallet above grade so that they are protected from weather, wind, dust, water, or construction operations.

3. Equipment shall not be stored outdoors. Where equipment is stored or installed in an area with susceptibility to moisture, such as unheated buildings, untested piping, etc., provide an acceptable means to prevent moisture damage, such as plastic cover and a uniformly distributed heat source to prevent condensation.

C. The project site is located where outside temperatures vary between 10 deg F. to 110 deg F. Humidity in this area will range from 10% to 100%.

1.10 AREA CLASSIFICATIONS

A. Area classifications are shown on the site electrical plans. The area enclosed by

walls or the entire drawing area shall be as classified unless otherwise described or shown. All electrical equipment, enclosures, supports, and equipment shall be formally rated for or, at minimum, meet the intent of the rating. If no area classification rating is shown, classification shall default to a NEMA 12 rating for indoors, and NEMA 4 rating for outdoors.

1.11 SUBMITTAL REQUIREMENTS

A. General

1. Requirements described herein are specific to electrical submittals and are secondary to those described in other general specifications sections. Any additional requirements described here that are beyond those described in those sections shall be provided as described. Conflicts shall be resolved by giving priority to general specifications.

2. The Contractor shall ensure that the System Integrator and/or equipment suppliers provide the submittal documentation required in this section. Submittals shall be neat, orderly, complete (without un-needed parsing), and indexed.

3. The Contractor shall coordinate submittals with the work so that project will not be delayed. This coordination shall include scheduling the different categories of submittals, so that one will not be delayed for lack of coordination with another. Time extensions will not be allowed due to failure to properly schedule submittals.

4. No material or equipment shall be delivered to the job site until the submittal for such items has been reviewed by the Engineer and marked "no exceptions noted" or "make corrections noted".

5. The equipment specifications have been prepared on the basis of the equipment first named in the Specifications. The Contractor shall note that the second named equipment, if given, is considered acceptable and equal equipment, but in some cases additional design, options, or modifications may be required to meet Specifications or functional installation.

6. Exceptions to the Specifications or Drawings or equipment or procedures submitted as “equal” to specified equipment shall be clearly identified by the equipment supplier in a letter at the front of the submittal. Submittal data for “equal” equipment or procedures shall contain sufficient details so a proper evaluation may be made by the Engineer. The Contractor is responsible for verifying proper application/operation of substituted equipment.

7. Deviations from the Contract documents shall **not** be incorporated into the

work without prior written approval of the Engineer. A "Change Order" directive from the Engineer is required prior to incorporating any deviation from the Contract documents that has costs associated. The cost differential associated with this change order must be negotiated with the Engineer to amend the Contract to reflect the costs or savings.

B. Submittal Procedures

1. Identify all submittals by submittal number on letter of transmittal. Submittals shall be numbered consecutively and resubmittals shall have a letter suffix. For example:

   a. 1st submittal: 1
   b. 1st resubmittal: 1A
   c. 2nd resubmittal: 1B, etc.

2. Shop documents and drawings shall be submitted for all devices and components in the electrical system. The Contractor is notified that this is a “Fast Track” project and all electrical & instrumentation drawings shall be submitted in a timely manner as not to delay completion of the project.

3. Within 30 calendar days after contract award, the Contractor shall furnish to the Engineer six (6) sets of all submittals (4 paper, 2 electronic on CD) required for this Division. Interconnection drawings, training documents test procedures, and O&M Manuals as applicable shall be submitted timely as to not delay the project.

   a. Submittals may be delivered entirely electronically via email (no hard copy required) if total submittal documents do not exceed 30 pages. However, General Contractor supervision must not be circumvented by sending submittals direct to Engineer.

   b. Electronic Submittals shall be transmitted with the hard copy submittals and be viewable using a PDF reader.

   c. Electronic (PDF) submittals must follow all applicable requirements for hard copy submittals including indexing, bookmarks, highlighting, selection indicators (box, highlight) etc. Use of native PDF files (not scans) are required if one exists on the www.

4. Submittal Preparation

   a. Submittals shall be published 1st electronically and 2nd on hard copy paper stock.

   b. Electronic submittals shall be assembled in accordance with

the specifications for hard copy submittals with table of contents, bookmarks, tabs, subtabs, etc. utilizing the electronic bookmarks feature available in the PDF assembler. Only one PDF file is allowed for each submittal.

c. Electronic (PDF) submittals must follow all applicable requirements for hard copy submittals including indexing, item selection indication, bookmarks, etc.

d. Use of native PDF files (not scans) are required if one exists on the www. Ignoring this requirement is cause for submittal rejection.

5. Each submittal over 25 pages shall be bound in a three ring binder, which is sized such that when all material is inserted the binder is not over 3/4 full. Binder construction shall allow easy removal of any page without complete manual disassembly; spiral ring type binders are not acceptable. Submittals 25 pages or less may be stapled without binder or indexing.

   a. Each binder shall be appropriately labeled on the outside spine & front cover with the project name, contract number, equipment supplier's name, specification section(s), and major material contained therein.

   b. An index shall be provided at the inside of the front cover. This index shall itemize the contents of each tab and subtab section.

   c. Field equipment shop documents, panel equipment shop documents, drawings, and bill of materials shall be grouped under separate tabs. Shop documents shall be ordered in the same sequence as their corresponding Contract specification subsection.

   d. All spare parts shall be listed separately at the end of the Bill of Materials list.

   e. Data summary sheets shall be provided for each individual piece of instrumentation. The data summary sheets shall have the following information preceding their corresponding catalog data:

      1) Instrumentation type and tag name.
      2) Location/description.
      3) The manufacturer's model and part number with all options.
      4) Range, span, units, input and output signals.
      5) Description of component.
      6) Contract specification subsection number reference.

f. Drawings may be bound in separate 11 x 17 binder or included with the 8.5 x 11 binder if folded such that the title block is visible with drawing folded. Drawings that are "C" or "D" size are not allowed.

6. The reviewed submittals will be annotated "Make Corrections Noted", "No Exceptions Noted", "Revise and Resubmit Noted Items", or "Rejected without Review." The following actions shall then be taken by the Contractor:

a. "No Exceptions Noted" - The Contractor may proceed with the work covered in this submittal. No resubmission is necessary.

b. “Make Corrections Noted” - The Contractor may proceed with the work covered in this submittal incorporating the changes noted. However, the Contractor shall revise the submittal in accord with the changes noted and resubmit six (6) copies of drawings, bill of materials, and catalog data denoting changes within 14 calendar days when requested by the Engineer for record keeping purposes.

c. "Revise and Resubmit Noted Items" - The Contractor shall not proceed with the work covered in this submittal. The Contractor shall revise and correct the submittal in accordance with the comments and resubmit six (6) copies within 14 calendar days for approval.

d. "Rejected without Review" submittal - The Contractor shall not proceed with the work covered in this submittal. The submittal did not address the work scope as defined by the submittal’s title or the previous submittal comments have not been addressed in full. The Contractor shall revise and correct the submittal in accordance with the specifications, and resubmit six (6) copies within calendar 14 days for approval.

7. Resubmittals shall address all comments by the Engineer. A submittal response letter shall be submitted that addresses each comment by the Engineer with a standardized response of “revised” or with a written explanation. Partial re-submittals (that do not address all comments) may be returned without review at the discretion of the Engineer.

8. The Contractor shall be responsible for the Engineer's review cost for each resubmittal in excess of the second resubmittal. These costs will be back-charged to the Contractor and will be deducted from his progress payments.

C. Electrical Equipment -- Submittal data shall be grouped by equipment type or

location. Each submittal shall be as complete as possible covering the entire project and scope of supply. Drawings or equipment submitted individually that are not on the critical path will not be accepted for individual review. The electrical submittals shall include (as a minimum):

1. Table of Contents

2. Comment Letter: The Project Engineer of the System Integrator shall note all deviations from Contract Documents and the reason(s) for the deviation. He may use this forum to inform the Engineer or installing Contractor of important information related to the project. RFIs must be submitted separately. Re-submittals shall include written responses to every comment provided by the engineer during the previous review.

3. Bill of Materials: The Contractor and System Integrator each shall provide Bill of Material for electrical components formatted as shown below. Generic names or part numbers as defined by a distributor or Integrator are not acceptable. Only the originating manufacturer's name and part number shall be listed. Provide separate bill of materials for each panel, MCC, instrument list, etc.

Bill of Material

Item #	Qty	Tag#	Description	Manufacturer	Part #

4. Shop Drawings:

   a. Equipment elevations with enclosure details drawn to scale or dimensioned with relative scale.
   b. Electrical One-line, Elementary, and wiring diagrams
   c. PLC I/O wiring diagrams

5. Catalog Data shall include the following: (features and options shall be highlighted, circled, or "arrowed.")

   a. Instrumentation data summary sheets (by Contractor)
   b. Manufacturer's technical information brochure
   c. Physical size and mounting details and illustrations
   d. Calibration Range
   e. Input/output signals
   f. Electric power, air, and/or water supply requirements.
   g. Options selected and available (Cross out items not included)
   h. Materials of construction of components

6. Program Software Documentation

a. Programming hardcopy
b. Programming disk copy

D. Shop Drawings - Shop drawings shall be furnished for each electrical panel even if one was not shown explicitly on the Contract drawings. Shop drawings shall be numbered in sequence. Blank drawings or drawings that contain no specific project data will not be accepted for review.

All drawings shall be generated with a computer utilizing AutoCAD 2000 or newer drafting package. Drawings shall be prepared in a professional manner and shall have borders and a title block identifying the project, manufacturer with address and phone number, system, drawing number, drawing title, AutoCAD file name, project engineer, date, revisions, and type of drawing. Drawings shall be no smaller than 11" x 17" and printed with a laser jet printer or plotted in ink on vellum. The lettering shall be legible and no smaller than 0.075 inch in height. Diagrams shall carry a uniform and coordinated set of wire colors, wire numbers, and terminal block numbers. The shop drawings shall include the following as a minimum:

1. Electrical one-line diagrams detailing all devices associated with the power distribution system. The following applicable information or data shall be shown on the one- or three- line diagram: location, size and amperage rating of bus; size and amperage rating of wire or cable; breaker ratings, number of poles, and frame sizes; power fail and other protective devices; fuse size and type.

2. Detailed analog and digital I/O diagrams showing the wiring requirements for each instrument or device connection. Reference the Contract Drawings for an example of each I/O card drawing requirements. If one is not included in the Contract Drawings, then one may be obtained from the Engineer upon request.

3. Elementary (wiring) diagrams shall be provided for all relay logic, programmable logic controls, motor controls, power supplies, and other wiring. All elementary (wiring) diagrams shall be drawn in JIC EMP/EGP format and standards showing ladder rung numbers and coil and contact cross referencing numbers.

4. Enclosure and Elevation layout diagrams shall be provided to show all deadfront, front panel and backpan devices drawn to scale. Show fabrication methods and details; including material of construction, paint color, door latch and lock, and ventilation system. Submit base plan showing allowed conduit entrance areas and bolt hole locations.

5. Submit full size drawing of all nameplates and tags, as specified herein, to be used on project. Submittal to include the following:

a. Dimensions of nameplate.
b. Exact lettering and font for each nameplate.
c. Color of nameplate.
d. Color of lettering.
e. Materials of construction.
f. Method and materials for attachment.
g. Drawing showing location of nameplates on each, panel and enclosure.

E. Seismic Anchor Design Calculations

1. All switchgear, motor controls centers, transformers, cabinets, raceways, supports, and electrical materials shall be so installed as to remain in a secure and captive position when subjected to a horizontal force in accordance with the California Building Code for Seismic Zone 4 requirements. A seismic importance factor, corresponding to Essential Facility Occupancy Category, shall be used. Method of securing shall constrain equipment against both vertical and horizontal forces and overturning forces.

2. Calculations shall be submitted, as prepared by a structural engineer registered in the State of California, for earthquakes forces on all specified equipment. Calculations shall include wind loading forces for equipment installed outdoors. Describe requirements for anchorage, components, layout, location and size of all bolts, straps, clips or other devices used.

PART 2: PRODUCTS

2.01 QUALITY

A. All equipment and materials shall be new, in current production, and the products of reputable suppliers having adequate experience in the manufacture of these particular items. For uniformity, only one manufacturer will be accepted for each type of product.

B. Products specified that have become obsolete (out of current manufacturing, or have been superseded by another product) shall be cross-referenced to a replacement product(s) and provided in lieu of the specified product(s) for no additional cost. Under no conditions, shall products be submitted or furnished that are known (on manufacturer's list of obsolescence) and expected to be removed from current production within 12 months after of project submittal. Products found to have been furnished this way will be removed and replaced at Contractor's expense.

C. All equipment shall be designed for the service intended and shall be of rugged construction, of ample strength for all stresses which may occur during

fabrication, transportation, erection, and continuous or intermittent operation. All equipment shall be adequately braced and anchored and shall be installed in a neat and workmanlike manner. Appearance and safety, as well as utility, shall be given consideration in the design of details. All components and devices installed shall be standard items of industrial grade, unless otherwise noted, and shall be of sturdy and durable construction suitable for long, trouble free service. Light duty, fragile and competitive grade devices of questionable durability shall not be used.

D. Products that are specified and include a manufacturer, trade name or catalog number are intended to establish a standard of quality, performance, warranty and service. Products that are specified "or equal" or "or approved equal," do not prohibit the use of equal products of other manufacturers provided they are submitted and favorably reviewed by the Engineer prior to procurement and installation.

E. Underwriters Laboratories (UL) listing is required for all substituted equipment when such a listing is available for the first named equipment.

F. When required by the Contract Specifications or requested by the Engineer, the Contractor shall submit equipment or material samples for test or evaluation. The samples shall be furnished with information as to their source and prepared in such quantities and sizes as may be required for proper examination and tests, with all freight and charges prepaid. All samples shall be submitted before shipment of the equipment or material to the job site and in ample time to permit the making of proper tests, analyses, examinations, rejections, and resubmissions before incorporated into the work.

2.02 NAMEPLATES & TAGS

A. Equipment exterior nameplates - Nameplate material shall be rigid laminated black plastic with beveled edges and white lettering; except for caution, warning, and danger nameplates the color shall be red with white lettering. The size of the nameplate shall be as shown on the drawings. No letters are allowed smaller than 3/16". All nameplates located outdoors shall be UV resistant. Securely fasten nameplates in place using two stainless steel screws if the nameplate is not an integral part of the device. Epoxy cement or glued on nameplates will not be acceptable. Engrave the nameplates with the inscriptions as approved by the Engineer in the submittal.

1. For each major piece of electrical equipment provide a manufacturer's nameplate showing the Contract specified name and number designation, and pertinent ratings such as voltage, # of phases, ratings, etc.

2. For each device with a specific identity (pushbutton, indicator, instrument, etc.) mounted on the exterior or deadfront of a piece of equipment provide a nameplate with the inscription as shown in the Contract documents.

3. Where no inscription is indicated in the Contract documents, furnish nameplates with an appropriate inscription providing the name and number of device.

B. Equipment Interior Nameplates - Nameplate material shall be clear plastic with black machine printed lettering as produced by a KROY or similar machine; except caution, warning, and danger nameplates shall have red lettering. The size of the nameplate tape shall be no smaller than 1/2” in height with 3/8" lettering unless otherwise approved by the Engineer. Securely fasten nameplates in place on a clean surface using the adhesion of the tape. For each device with a specific identity (relay, module, power supply, fuse, terminal block, etc.) mounted in the interior of a piece of equipment provide a nameplate with the inscription as shown in the Contract documents. Where no inscription is indicated in the Contract documents, furnish nameplates with an appropriate inscription providing the name and number of device used on the submittal drawings. Stamp the nameplates with the inscriptions as approved by the Engineer in the submittal.

C. Equipment Tags - When there is no space or it is impractical to attach an engraved plastic nameplate with screws, as is the case with most field devices and instruments, the Contractor shall attach a tag to the equipment with the same inscriptions as specified above in paragraph A. The tag shall be made from stainless steel material and the size of the nameplate shall be no smaller than 3/8"h x 2"w with 3/16" machine printed or engraved lettering unless otherwise approved by the Engineer. The tag shall be attached to the equipment with stainless steel wire of the type normally used for this purpose.

2.03 FASTENERS

A. Fasteners for securing equipment to walls, floors, or ceilings, shall be stainless steel. The minimum size fastener shall be 3/8 inch diameter.

2.04 COMPONENTS

A. SWITCHES AND PUSHBUTTONS

1. Switches (HS) and pushbuttons (HC) for general purpose applications shall be water and oil tight as defined by NEMA 4X, corrosion resistant as defined by NEMA ICS 6-110.58, U.L. listed, standard 30 mm diameter, with plastic holding nut.

2. Switches and pushbuttons shall have contacts rated NEMA A600 or 10 amperes continuous and 600 VAC. Provide NO and NC contacts as required.

3. Engraved black legend plates shall be provided to define each switch and pushbutton function.

4. Selector switch handles and pushbutton caps shall be black unless otherwise noted on drawing. Lock-out stop caps shall be red.

5. Selector switches for hand-off-auto (HOA) applications shall have the hand position to the left, off in center, and auto in the right position.

6. Pushbuttons and selector switches in hazardous locations shall have hermetically sealed contacts or explosion proof enclosures.

7. Lockout stop pushbuttons shall include padlocking attachment. Pushbutton type shall be coordinated with padlock attachment type.

8. Switches and pushbuttons shall be Allen-Bradley 800H, or approved equal.

B. INDICATING LIGHTS

1. Indicating Lights for general purpose applications shall be NEMA 4X, corrosion resistant as defined by NEMA ICS 6-110.58, U.L. listed, 30 mm diameter, with plastic lens, plastic holding nut, and miniature bayonet lamp base.

2. Lamp shall be full voltage 120 VAC with 28 chip (min) High Intensity LED.

3. Indicating lights shall have contacts rated NEMA A600 or 10 amperes continuous and 600 VAC. Provide NO and NC contacts as required.

4. Engraved black legend plates shall be provided to define each lights function.

5. Indicating light type and color of lens shall as follows or as otherwise shown on the Contract Drawings:

a.	Open/On	Green
b.	Closed/Off	Red
c.	Alarm	Amber or Blue
d.	Power On	White

6. Indicating lights designated "PTT" on wiring diagram or shown with push-to-test wiring shall be provided with a push-to-test switch and wiring.

7. Indication lights shall be Allen-Bradley 800H, or approved equal.

C. RELAYS AND TIMERS

1. General: Relays and timers shall be provided with N.O. or N.C. contacts

as shown on the Contract drawings. All spare contacts shown shall be provided. Contacts shall be rated 10 amps minimum at 120 VAC, 60 Hz unless otherwise shown on the Contract drawings. Coil voltage shall be 120 VAC unless otherwise described or shown on the Contract drawings. Relays and timers shall be designed for continuous duty. All relays shall be U.L. listed. All relays and sockets shall be the product of a single manufacturer. The following is a summary of abbreviations associated with relays and timers:

CR	– Control relay
TR	– Timing relay
TDOE	– Time delay on energization
TDOD	– Time delay on de-energization
IBT	– Intrusion Bypass Timer

2. Sockets for plug-in relays and timers shall be standard industrial type din rail mount with barrier type pressure plate screw terminals. Sockets shall be rated 300 VAC, 10 amps minimum.

   a. Blade 8 or 11 pin for coil voltage above 90 volts AC or DC.

   b. Octal 8 or 11 pin for coil voltage below 90 volts AC or DC.

3. Control relays (CR) shall be plug-in type with neon indicating lights and clear see-through sealed housing to exclude dust. Provide IDEC Type RR, or approved equal. Two form-C contacts (minimum) shall be provided on each relay.

4. Time delay relays on energization (TR-TDOE) shall be solid state plug-in relays with adjustable timer ranges from 1 second to 10 hours selectable unless other ranges are shown. Provide LED timer energized indicator lamp. Time delay relays shall be IDEC RTE, or approved equal.

5. Time Delay Relays (TR-TDOD)

   a. Time delay relays on de-energization (TR-TDOD) (continuous power control input) shall be solid state plug-in relays with a timer adjustable range from 1 second to 10 hours selectable unless other ranges are shown. Provide LED timer energized indicator lamp. Time delay relays shall be IDEC RTE, or approved equal.

   b. Time delay relays on de-energization (TR-TDOD) (true off) shall be solid state plug-in relays with a timer adjustable range from 1 second to 10 minutes unless other ranges are shown. True off time delay relays shall be IDEC GT3F-2, or approved equal.

6. Intrusion bypass timer (IBT) to be a 6 hour maximum spring wound timer with SPDT contacts with hold position, Intermatic model FF60MH series, or Paragon SW

D. CIRCUIT BREAKERS

1. Circuit breakers shall be of the indicating type, providing ON, OFF and TRIPPED positions of the operating handle. Circuit breakers shall be quick-make, quick-break, with a thermal-magnetic (TM) action, except when protecting motor feeders where motor circuit protector (MCP) breakers with adjustable magnetic trip shall be used. Where indicated, provide breakers with ground fault (GFI), Long (L), Short (S) and Instantaneous (I) adjustable trip functions.

2. Circuit breakers shall be the bolt-on type. The use of tandem or dual circuit breakers in a normal single-pole space to provide the number of poles or spaces specified are not acceptable. All multiple-pole circuit breakers shall be designed so that an overload on one pole automatically causes all poles to open.

3. Each 480 volt circuit breaker shall have a minimum interrupting capacity of 42,000 amperes or as otherwise shown in the drawings. Each 120 or 208 or 240 volt breaker shall be rated for a minimum 10,000 amperes interrupting capacity. Breakers shall be sized as shown on Drawings and as necessary for the supplied equipment.

4. Circuit breakers and motor circuit protectors shall be manufactured by Cutler-Hammer, G.E., ITE, or approved equal.

E. CONTROL POWER TRANSFORMER

1. Control power transformer shall be epoxy encapsulated for dust and moisture protection. The internal wiring shall be copper and have 105 deg. C insulation rating. The unit shall feature barriered screw terminals for connection to electrical circuits. Provide with time-delay, slow-blow secondary fuse rated to protect the transformer and interrupt 10,000 amperes at 120VAC. Two primary fuses rated for 480 VAC and AIC as shown in the drawings shall be provided. Transformer minimum size and voltage ratings shall be as shown on Contract drawings. Control power transformer shall be Micron Impervitran, Cutler Hammer MTE or approved equal.

F. VOLTAGE MONITOR RELAY (VMR)

1. The voltage monitor relay (VMR) shall continuously monitor the three phases for power loss, low voltage, phase loss, and phase reversal. The

VMR shall interface to the control circuit with DPDT contacts rated for 4 Amps at 120 VAC. The VMR shall have a drop-out voltage adjustment, time delay adjustment, and status indicating LEDs. Voltage monitor relay shall be Time Mark 2652, or approved equal.

2.05 DEVICES

A. SWITCHES

1. General purpose specification grade switches shall be manufactured in accordance with UL 20. Switches shall be one pole rated, 20 amps, at 277 VAC, 1HP at 120 VAC, 2 HP at 240 VAC. Switches shall have copper alloy contact arm with silver cadmium oxide contacts. Switches shall have slotted terminal screws and a separate green grounding screw. Provide Leviton 1221, or approved equal.

2. Wall mount motion detector switches (denoted with M next to switch symbol in drawings) shall utilize passive infrared detection with 180 deg field of view to determine if the space is occupied by personnel. The device shall be capable of switching incandescent (800W at 120V) and fluorescent (1200VA at 120V) lamps with electronic ballasts. The device shall feature a manual-off-auto switch. A delay off time adjustment shall be settable from 30 seconds to 30 minutes. The device shall incorporate a photocell with light intensity adjustment to keep the switch from activating when light levels are above setting. Provide Leviton ODS10, or approved equal.

3. Timer Switches (denoted with T next to switch symbol in drawings) shall provide a variable time range countdown of lighting circuit. Depressing touchplate turns lights on for the dial setting located behind the touchplate. Dial setting ranges of 1 minute to 18 hours shall be attainable. An illuminated LED indicates the load is on and blinking LED accompanied by annunciator sound indicates end of time cycle. Device shall be capable of switching incandescent (600W at 120V) and fluorescent (900W at 120V) lamps with electronic ballasts. Timer Switch shall be Leviton 6652, or approved equal.

4. Thermostat Switches (T in circle on drawings) shall have a plastic NEMA 4X rated housing with stainless steel temperature sensing coil externally mounted. A face mounted dial shall allow temperature settings for heating and cooling from 40 to 104 deg F. The switch shall be rated for 120/240 volt at 10A inductive/16A resistive, SPDT. Temperature switch shall be Esapco TH15 or approved equal.

5. Special purpose switches shall be provided with the amperage, voltage, and configuration as shown on the Drawings. Switches used as motor

disconnects for single phase motors shall be horsepower rated.

B. RECEPTACLES

1. General purpose receptacles shall be duplex and rated 20 amps, 120 VAC, 2 pole, 3 wire grounding, NEMA 5-20R configuration, specification grade, and side wired to screw terminals. Face color shall be ivory. General purpose receptacles shall be specification grade Leviton 5362-I or approved equal.

2. GFI, ground fault circuit interrupting, receptacles (denoted by GFI next to receptacle symbol on plan) shall be used in all boxes shown as weatherproof. GFI receptacles shall be duplex, 20A, 120V, with "test" and "reset" buttons with shallow design for mounting and standard screw terminals for direct wiring. “Daisy Chain” connecting multiple receptacles from one GFI unit is not acceptable. GFI receptacles shall be Leviton 8898, or approved equal.

C. DISCONNECT SWITCH

1. Disconnect Switch shall be heavy duty horsepower rated, three pole, single throw, fusible/non-fusible with quick make/break operating mechanism. The enclosure shall be painted steel and rated NEMA 3R. The enclosed switch shall be rated for 480 Volt, and 10 HP (minimum) unless otherwise shown on the drawings. Provide fuses, auxiliary contacts, or indicators as required by the motor control or one-line diagram. The operator shall actuate the switch via a side mounted handle and have provisions for up to 3 padlocks. Disconnect switch shall be Cutler Hammer or approved equal.

2.06 GENERATOR CONNECTION PANEL

A. Generator Termination Enclosure shall utilize Leviton 16 series Cam-Type male and female connectors. The panel shall be UL listed. Provide and install male receptacles on panel, rated 400 amps per phase on panel. Generator Termination Enclosure shall be weatherproof and stand alone as shown on Contract Drawings.

B. Generator Control receptacle shall be rated 14A, 600V, 10 conductor. Epic female receptacles model 10.4411 with base 70.4440. Generator cord mounted generator control plugs, shall be rated 14A, 600V, 10 conductor, Epic male plugs model 10.4401 with hood 70.4624NP. Provide components to replace two existing control plugs on existing generators.

C. Generator Hook-up

1. Provide single conductor power supply cable for each phase plus ground

to connect generator to building or electrical system to be powered. See electrical one-line drawings for cable amperage and conductor requirements. Cable jacket shall be UV and oil resistant PVC. Individual conductors shall have type K stranding for flexibility, and 90 deg C, 2000 Volt, EPDM insulation. Cable shall be Carol cable, Super VU-Tron II type SO, W Diesel Locomotive or approved equal.

a. Cable length shall be 25 feet each, quantity 6.

2. Cable(s) shall include a female plugs(s) mounted on one end as be compatible with male receptacle to be connected. Female plugs shall be sized appropriately for cable diameter.

a. Provide 400A, 480 vac rated, Leviton Series 16 double set screw female mating plugs or approved equal.

3. Cables and receptacle shall be assembled, tested and provided for immediate use on SSWD Generator.

2.07 UTILITY METERING SWITCHBOARD

A. Metering Panel

1. Provide totally metal enclosed front accessible, self contained meter/main power utility metering panel. Voltage, phase, AIC and continuous amperage rating shall be as shown on Contract Drawings. Panel will include meter socket, factory installed main breaker(s) and test by-pass facility.

2. Design entrance features per NEC, local codes, and serving Utility requirements.

3. Metering enclosure shall be NEMA 3R construction for underground utility service. Enclosure shall be manufactured from galvanized 16 ga. (min) sheet steel. The cabinet shall be finished with ANSI 61 gray enamel paint. Provide pad mount, surface mount or flush mount cabinet per installation detail.

4. Provide remote CT metering panel with test switches and meter socket. Enclosure shall be rated NEMA 3R for outside installation. Provide meter socket meeting serving Utility standards.

5. Utility metering switchboard shall be Cutler Hammer Pow-R-Line, Tesco Metering Switchboard or approved equal.

B. Switchboard

1. Switchboard shall be front accessible with group mounted, buss connected circuit protective devices. Where provisions for future circuit protective devices are required, space for the device, corresponding vertical buss, device connectors and the necessary mounting hardware shall be supplied.

2. Distribution section shall meet all requirements per NEC, local codes, and as defined in the drawings.

3. Power buss shall be copper, 3 phase, 4 wire, 480 volt, 42,000 AIC minimum (or as shown otherwise in the drawings).

4. Ground buss shall be copper and rated per NEC relative to the power bus amperage rating.

5. Switchboard enclosure shall be NEMA rated as shown in the drawings.

6. Utility metering switchboard shall be Cutler Hammer Pow-R-Line, or approved equal.

C. SURGE SUPPRESSOR (TVSS)

1. TVSS shall be suitable Service entrance loacation per ANSI/IEEE C62.41 for and tested according to ANSI/IEEE C62.44 and UL1449 as Secondary Surge Arrestor.

2. Unit shall be sealed and not allow vapors from entering the switchboard enclosure after a voltage surge event.

3. Modes of protection – Line to Line, Line to Ground, Line to Neutral (as applicable). Voltage, phase and neutral connections per one-line diagram. Current surge capacity shall be 60,000 amps per mode minimum

4. The TVSS shall be factory installed inside the switchboard during assembly by the original equipment manufacturer. The OEM design shall be integral to the design of the switchgear with special paneling and cutouts specifically designed for unit mounting.

5. The TVSS connections shall be located as close as possible to the load side of main disconnect device and ground/neutral bar.

6. The TVSS shall have integral 30-amp disconnect and fuses. Service of the TVSS assembly, fuses or other serviceable components shall be from front access of the switchboard and shall not require disassembly of switchboard panels to repair or replace parts.

7. Surge Suppressor TVSS shall be Cutler-Hammer Clipper, Current Technology TransGuard or approved equal.

D. Power Monitor

1. Provide a microprocessor based line of multifunction, power and energy meters. The meter device shall be UL listed. All meters shall have the following ratings, features, and functions; unless a specific meter type is designated.

   a. Meter shall be designed for Multifunction Electrical Measurement on 3 phase power systems. The Meter shall support 3-Element Wye, 2.5 Element Wye, 2 Element Delta, 4 wire Delta systems.

   b. Meter surge withstand shall conform to ANSI C62.41 (6KV)

   c. The meter shall be user programmable for voltage range to any PT ratio.

   d. The meter shall have a burden of 1 Mega Ohm, 0.014W at 120 Volts.

   e. The meter shall accept a direct voltage input range of up to 576 Volts Line to Neutral, and a range of up to 721 Volts Line to Line.

   f. Meter shall accept a current input of up to 11 amps continuous. Start up current for a 5 Amp input shall be no greater than .005 Amps.

2. Power meter shall be capable of a dual input method for current inputs. As standard the meter shall be designed to allow the CT circuit to pass directly through the meter without any physical termination on the meter, ensuring the meter cannot be a point of failure on the CT circuit. As an option where indicated on the drawing or required for the application, provide additional termination pass-through bars, allowing the CT leads to be terminated on the meter. The meter must be capable of supporting both termination methods.

3. The meter shall have the following additional ratings and features:

   a. Fault Current Withstand shall be 100 Amps for 10 seconds, 300 Amps for 3 seconds, and 500 Amps for 1 second.

   b. Meter shall be programmable for current to any CT ratio. The use of DIP switches for selecting fixed ratios shall not be acceptable

   c. Meter shall have a maximum burden of 0.005VA per phase, at the maximum at 11 Amperes continuous input.

   d. Meter to accept a pass through wire gauge dimension of 0.177” /

4.5 mm.

4. The meter shall have an accuracy of +/- 0.1% or better for volts and amps, and 0.2% for power and energy functions. The meter shall meet the accuracy requirements of IEC687 (class 0.2%) and ANSI C12.20 (Class 0.2%).

   a. The meter shall provide true RMS measurements of voltage, phase to neutral and phase to phase; current, per phase and neutral.

   b. The meter shall provide sampling at 400+ samples per cycle on all channels measured readings simultaneously.

   c. Type meter shall provide total % THD (Total Harmonic Distortion) Monitoring to the 40th order for Voltage and current per phase, and shall provide Volts, Amps, kW, kVAR, PF, kVA, Frequency., kWh, kVAh, kVARh and 1 KYZ pulse output and limit exceeded alarms.

5. The meter shall include a three-line, bright red, .56” LED display.

   a. The meter shall fit in both DIN 92mm and ANSI C39.1 Round cut-outs.

   b. The meter must display a % of FULL SCALE on the front panel to provide an analog feel. The % FULL SCALE shall have not less than 10 segments.

6. The meter shall be available in transducer only version, which shall not include a display. The transducer version shall mount directly to a DIN rail.

7. The Transducer portion of the meter shall be capable of RS485 Modbus communications.

8. Meter shall be a traceable revenue meter, which shall contain a utility grade test pulse allowing power providers to verify and confirm that the meter is performing to its rated accuracy.

9. The meter shall include 1 independent communications port on the back, with advanced features.

   a. The port shall provide RS485 communication with Modbus ASCII, Modbus RTU, or DNP 3.0 protocol.

   b. Baud rates shall be from 9600 baud to 57,600 baud.

10. The meter shall be capable of operating on a power supply of 90 to 265 Volts AC and 100 to 370 Volts DC. Universal Power AC/DC Supply shall be available. An option shall also be available to operate on a power supply from 18-60 VDC.

    a. Meter AC/DC power supply shall accept burden of 10VA max.

11. Meter shall provide update rate of 100msec for Watts, Var and VA. All other parameters shall be 1 second maximum.

12. The meter shall have I/O and communication expandability through two Option card slots on the back.

    a. The cards shall be capable of being installed in the field, without removing the meter from installation.

    b. The meter shall auto-detect the presence of any I/O Option cards.

    c. The Option card slots shall accept I/O cards in all of the following formats: Four channel bi-directional 0-1mA Output Card; Four Channel 4-20mA Output Card; Two Relay Outputs/2 Status Inputs Card; Four Pulses/4 Status Inputs Card.

    d. The Option card slots shall accept communication cards in all of the following formats: 100BaseT Ethernet Modbus TCP; Fiber Optic Ethernet Modbus TCP.

    e. The meter shall be capable of accepting any combination of up to two cards.

13. Power meter shall be able to be stored in (-20 to +70) degrees C.

14. Operating temperature shall be (-20 to +70) degrees C.

15. A NEMA 12 faceplate rating shall be available for the meter.

16. Power Monitor shall be Electro Industries/GaugeTech Shark200 with INP100S 100BaseT Ethernet and RO1S Relay Output expansion cards, or approved equal.

2.08 RADIO SYSTEM

A. RADIO MODEM

1. Unlicensed 450 Mhz spread spectrum radio for continuous communications to multiple addresses. The radio shall be system addressable to minimize interference from adjacent systems with different

system addresses. The radio shall utilize a DB-25 RS-232 port for communications input and N-Female connector for antenna lead connection output. The radio shall operate on DC voltage as shown in contract drawings. The radio shall operate to full performance over a temperature range of -30 deg C to +60 deg C. The radio shall be MDS 4710 with diagnostics, or approved equal. Obtain exact frequency by submitting an RFI for owner license information.

B. ANTENNA

1. Each antenna system shall be furnished and installed complete and functional for the intended use. An antenna system shall include but not be limited to, antenna, antenna pole, mounting hardware, lightning arrestor, and coaxial cables with connectors.

2. Antenna system shall be meet the following specifications:

a. Antenna shall be installed and supported as shown on the Contract Drawings. Support members shall have sufficient strength to withstand local wind conditions and shall be protected from sun exposure and weather damage.

b. Support hardware such as clamps, orientation mounts, and offset brackets shall be steel protected with a hot dip galvanized finish or stainless steel. Clamps and mounts shall be heavy duty in order to transfer the full antenna load to the support tower or mast. Bolts and screws shall be stainless steel.

c. The radio antenna shall be 9 dB gain, 430-460 Mhz, aluminum, circumferential welded construction, black powder coat finish, directional type Yagi, VSWR 1.5:1, 50 ohm impedance, N-female connection, Maxrad Model BMOY 4305 or approved equal.

C. TRANSMISSION CABLE

1. Provide 50 Ohm, 3/8” weatherproof coaxial cable from lighting arrestor to antenna. The coax cable shall have a corrugated outer conductor of copper, copper-clad aluminum inner conductor with foam dielectric. The coax cable shall be jacketed for corrosive environment and ultra-violet exposure. The coax cable shall be capable of a minimum bending radius of 3.75 inches. The cable shall be installed as one continuous length from the antenna to the lighting arrestor. Antenna cable shall be Andrew LDF2P-50-3 3/8" coax cable or approved equal.

2. Cable end “N” connectors shall be furnished for field installation after the cable is run in conduit. Provide straight or right angle connectors as

required for the installation as required.

3. Pigtail connector. Provide low loss connection cable for connecting the Radio antenna connection to the lightning arrestor. Pigtail shall have compatible connectors for the radio and lightning arrestor.

4. Furnish an antenna lighting arrestor with “N” connector on the antenna coaxial transmission line. The lighting arrestor shall be grounded to the control panel ground buss by a #8 AWG or larger bonding wire. The lightning arrestor shall be a PolyPhaser IS-50NX-C2 or equal with flange mount.

5. The cable shall be carefully installed to prevent damage to the jacket and routed with a minimum bending radius of 8 inches except where required at the conduit to free-air transition.

6. Provide connector weatherproofing kits for outdoor exposed connectors and grounding strap attachments. All mating connectors that are exposed to weather shall be wrapped with a sealing material designed to protect against water and dirt entry into the connectors.

7. Provide miscellaneous hardware such as grounding kits, hanger kits, and feed through assemblies. Grounding kits shall ground the coaxial shield within 1 foot of the cable connector at the antenna. Provide Andrew Sure-Ground or equal.

PART 3: EXECUTION

3.01 CONSTRUCTION METHODS

A. Equipment shall be assembled and wired by the manufacturer prior to shipment. Field modifications or changes are not allowed without a written "change order" to the Contract. Field changes, however large or small, shall be executed using the components, materials, wiring, labeling, and assembly methods identical to that of the original supplied equipment.

B. Electrical plugs, receptacles, cords, and connectors required to power or interface the equipment and panels shall be furnished and installed by the Contractor.

C. Factory as-built drawings for each custom manufactured control panel or MCC shall be shipped with the equipment and placed inside in waterproof envelopes.

3.02 EQUIPMENT FABRICATION

A. All electrical equipment, including custom manufactured equipment, shall meet the requirements of Underwriters Laboratories (UL) and bear the appropriate label. Panels shall be affixed with UL label prior to shipment and be built in

accordance with the UL guidelines and procedure that corresponds to the UL label. Custom control equipment shall bear a UL-508 label, minimum, with additional UL labels as required per intended service.

B. Panel cutouts for devices (i.e. indicating lights, switches) shall be cut, punched, or drilled and smoothly finished with rounded edges. Exposed metal from cutouts that are made after the final paint finish has been applied shall be touched up with a matching paint prior to installing device.

C. Equipment doors shall swing freely and close and latch with proper alignment.

D. Component within the electrical equipment shall be securely mounted on an interior subpanel or backpan and arranged for easy servicing. Mounting bolts and screws shall be front mounted for device removal without special tools or removal of entire mounting panel.

E. A ground bus shall be provided in each enclosure or cabinet. It shall have provisions for connecting a minimum of ten grounding conductors. Screw type lugs shall be provided for connection of grounding conductors. All grounding conductors shall be sized as shown on plans or in accordance with NEC Table 250-95, whichever is larger.

F. Bolts and screws for mounting devices on doors shall have a flush head which blends into the device or door surface. No fastening devices shall project through the outer surfaces of equipment.

3.03 WORKMANSHIP

A. All work in this division shall conform to the codes and standards outlined herein.

B. Installation shall be performed by qualified personnel providing first class workmanship per 16010, Qualifications.

C. Maintain equipment installed (or to be installed) in new condition. Protect equipment from damage while in Contractor care from dust, water, or mishaps that are typical to construction sites

D. Confirm that equipment and materials are correct for their intended duty and will be installed per manufacturer guidelines. Equipment and components found to be installed inconsistent with manufacturer guidelines and/or these specifications will not be acceptable and subject to removal and replacement.

E. Upon completion of daily work, remove excess materials, scraps, and debris from the work area and from the inside of equipment.

F. Equipment furnished under this contract or provided to Contractor for installation shall be installed in accordance with manufacturer's instructions, installation

calculations, and Contract documents.

3.04 EQUIPMENT SHIPMENT AND STORAGE

A. Shipment -- Any equipment whose destination (jobsite) is more than 25 miles from the factory shall be carefully protected for shipping. All openings shall be protected by plywood securely fastened to the framework of the equipment. Equipment shall be adequately covered during local delivery.

B. Storage -- From the time of receipt until the equipment is installed and energized, the equipment shall be considered in storage. While in storage, a 120V, 1 phase source of power shall be made available and connected to space heaters in all items of equipment so equipped. Equipment not provided with space heaters shall be provided with a light bulb or electric heater while in storage to prevent moisture condensation. Unless stored indoors, it shall be a least 1 foot above grade covered with at least 2 layers of heavy polyethylene plastic sheets and anchored to prevent damage by high winds. All equipment shall be protected from dust and moisture prior to and during construction. .

3.05 DAMAGED PRODUCTS

A. Damaged products that cannot be repaired to new condition shall be replaced with new products. All equipment and materials shall be in like-new condition at start-up and commissioning.

B. Minor cosmetic damage shall be repaired by spray painting, after properly preparing the surface, all scratches or defects in the finish of the equipment. Only identical paint furnished by the equipment manufacturer shall be used for such purposes.

3.06 INSTALLATION

A. General

1. Install all products per manufacturer's recommendations and the Drawings.

2. Provide all necessary hardware, conduit, wiring, fittings, and devices to connect the electrical equipment provided under other Sections.

3. Protect wiring insulation from wear by installing rubber cushions, bushings, or strip insulation, or by fastening the wiring to a rigid surface with zip ties and anchors.

4. Provide additional devices, wiring, conduits, relays, signal converters, isolators to complete interfaces of the electrical and instrumentation system.

5. Changing normally open contacts to normally closed contacts or vice versa

6. Adding additional relays to provide more contacts as necessary.

7. All programmable devices (not specifically excluded herein) shall be programmed, set-up and tested by the Contractor prior to startup. Programming and set-up parameters shall be adjusted or changed as directed by the Engineer during start-up and throughout the warranty period.

8. Coordinate with the Engineer and setup all alarm, process, and operation setpoints.

9. Keep a copy of the manufacturer's installation instructions on the jobsite available for review at all times prior to and during the installation of the associated equipment.

B. Panels and enclosures:

1. Install panels and enclosures at the location shown on the Plans or approved by the Engineer.

2. Install level and plumb.

3. Seal all enclosure openings to prevent entrance of insects and rodents.

4. Clearance about electrical equipment shall meet the minimum requirements of NEC 110.26

C. Conduits and Ducts:

1. Install all conduits and ducts per 16110 - Conduit, Boxes & Grounding

2. Minimum wire bending space at terminals and minimum width of wiring gutters shall comply with NEC tables 373-6 (a) & (b).

D. Wiring, Grounding, and Shielding:

1. Observe proper grounding and shielding practices as this application environment is generally noisy. The shield of shielded cables shall be terminated to ground at one end only, the origination end. The shield at the other end shall be encased in an insulated material to isolate it from ground.

E. Cutting and Patching:

1. The Contractor shall do all cutting and patching required for installing his work. Any cutting which may impair the structure shall require prior approval by the Engineer. Cutting and patching shall be done only by skilled labor of the respective trades. All surfaces shall be restored to their original condition after cutting and patching.

F. Cleaning and Touch up:

1. At the completion of the work, all parts of the installation, including all equipment, exposed conduit, and fittings, shall be thoroughly cleaned of grease and metal cuttings. Any discoloration or other damage to parts of the building, the finish, or the furnishings, due to the Contractor's failure to properly clean the system, shall be repaired by the Contractor.

2. The Contractor shall thoroughly clean any of his exposed work requiring same.

3. Vacuum and clean the inside of all electrical and instrumentation enclosures prior to applying power.

4. The Contractor shall paint scratched or blemished surfaces with the necessary coats of quick drying paint to match existing color, texture and thickness. This shall include all prime painted electrical equipment including but not limited to enclosures, poles, boxes, devices etc.

3.07 INITIAL APPLICATION OF POWER

A. The Engineer will direct the energization and de-energization of all existing and new equipment. The Contractor is not authorized to energize or de-energize any equipment unless he has been given written permission to do so or while in the presence of the Engineer.

1. Any equipment that is under repair, demolition or installation shall be locked off and tagged out of service with Contractor supplied padlocks and tags.

B. The Contractor is responsible for grounding of high and medium voltage cabling and/or bus during installation and removal of equipment. The contractor is responsible for complying with all California Electrical Safety Orders (ESO) and Occupational Safety and Health Act (OSHA) safety requirements and procedures while working in or near medium voltage equipment.

3.08 OPERATING AND MAINTENANCE INSTRUCTIONS

A. Operational Training

1. At time of completion, the Contractor shall provide a period of not less

than 6 hours training for instruction of operation and maintenance personnel in the use of systems. Instruct all personnel at one time in one session. Make necessary arrangements with manufacturer's representative. Provide product literature and application guides for user's reference during instruction.

B. Operations and Maintenance Manuals

1. Provide Operation and Maintenance manuals per specifications as described in “Submittal Requirements” in this section with the following additional requirements:

   a. A comprehensive index.

   b. A complete "Record" set of favorably reviewed electrical submittals as provided under subsection “Submittal Requirements” illustrating all components, piping, and electrical connections.

   c. A complete list of the equipment supplied, including serial numbers, ranges, catalog cuts, and pertinent data.

   d. Full specifications on each item.

   e. Detailed service, maintenance and operation instructions for each item supplied. Schematic diagrams of all electronic devices shall be included. A complete parts list with stock numbers shall be provided for the components that make up the assembly. All of these shall be originals, no copies.

   f. Special maintenance requirements particular to this system shall be clearly defined, along with special calibration and test procedures.

   g. PLC & OI applications programming and configurations (as applicable)

2. Submit electronic readable PDF file format (CD disk copies (2) or email attachments) of the proposed O&M manuals for review by the Engineer. Submittals shall be delivered timely to the Engineer to allow for review period, corrections, and re-submissions as necessary.

   a. General Contractor supervision must not be circumvented by sending submittals direct to Engineer.

   b. O&M Submittals shall be published 1st electronically and 2nd on hard copy paper stock.

   c. Electronic Submittals shall be transmitted with the hard copy submittals and be viewable using a PDF reader.

   d. Electronic submittals shall be assembled in accordance with

the specifications for hard copy submittals with table of contents, bookmarks, tabs, subtabs, etc. utilizing the electronic bookmarks feature available in the PDF assembler.

e. Electronic (PDF) submittals must follow all applicable requirements for hard copy submittals including indexing, item selection indication, bookmarks, etc.

3. Provide four (4) hard copy O&M manuals per specifications as described in SUBMITTALS REQUIREMENTS in this section.

   a. Deliver approved hard-copy O&M manuals to the project site and Owner prior to pre-operational testing or equipment start-up.

C. At the end of the project hard copy and soft copy electronic PDF files, shall be updated to "as-built" conditions.

D. Provide two (2) sets of compact disk (CD) containing all drawings, programs, documents or other computer electronic files prepared for this project in native file format and updated to reflect as-built conditions.

3.09 SPARE PARTS

A. The Contractor shall supply all spare parts prior to start of field tests. All parts shall be sealed in plastic bags and delivered to the site in a heavy duty plastic storage bag. Bag shall be clearly labeled with part name & number and the corresponding equipment tagname.

B. The Contractor shall make available any replacement parts that are not manufacturer's normal stock items for immediate service and repair of all the instrumentation equipment throughout the warranty period.

C. The following spare parts shall be provided as part of this Contract:

1. Ten fuses for each type of fuse below 31 amps, 3 of each type above
2. Ten lamps for each type of light, two lamps per color if LED type.
3. Two relays for each type of control, and time delay relay.
4. One voltage monitoring relay or power fail relay.

3.10 WARRANTY

A. The Contractor shall warrant all electrical and instrumentation equipment & software for a period of one (1) year from date of final acceptance. Standard published warranties of equipment which exceed the preceding specified length of time shall be honored by the manufacturer or supplier.

B. The Contractor shall have a staff of experienced personnel available to provide

on-site warranty service on two (2) working days notice during the warranty period. Such personnel shall be capable of fully testing and diagnosing hardware & software and implementing corrective measures. If the Contractor "fails to respond" in two (2) working days, the Owner, at his option, will proceed to have the warranty work completed by other resources. All cost for these other resources shall be reimbursed in full by the Contractor. "Fail to respond" shall be defined as: The Contractor has not shown a good faith effort and has not expended adequate resources to correct the problem. The use of other resources, as stated above, shall not change or relieve the Contractor from fulfilling the remainder of the warranty requirements.

C. Each time the System Integrator's repair person responds to a system malfunction during the warranty period, he or she must contact the designated maintenance supervisor for scheduling of the work, access to the jobsite, and permission to make repairs. Operation of facilities necessary to test equipment shall only be performed by or under the direction of the Operations Staff.

3.11 FINAL ACCEPTANCE

A. Final acceptance will be given by the Engineer after the equipment has passed the "final acceptance trial period", each deficiency has been corrected, final documentation has been provided, and all the requirements of design documents have been fulfilled.

B. At the end of the project, following the completion of the field tests, and prior to final acceptance, the Contractor shall provide the following:

1. Each "operation and maintenance" manual shall be modified or supplemented to reflect all field changes and as-built conditions.

2. Two (2) disk copies of all final documentation to reflect as-built conditions.

C. Keys: Submit two sets of all keys for locks supplied on this project. Wire all keys for each lock securely together. Tag and plainly mark with lock number or equipment identification, and indicate physical location, such as panel or switch number.

-END OF SECTION-

SECTION 16110 - CONDUIT, BOXES AND GROUNDING

PART 1: GENERAL

1.01 SCOPE OF WORK

A. Labor, materials, equipment, tools, safety gear, test equipment, incidentals, services, and transportation for a complete electro-mechanical installation as shown on the Drawings, included in these Specifications, or as can be reasonably implied from project descriptions.

B. The conduit, devices, boxes, & grounding system scope of work includes:

1. Provide and install miscellaneous trenching, conduits, junction boxes, field interconnection wiring, and associated hardware.

2. Provide all necessary hardware, conduit, wiring, fittings, and devices to connect the electrical equipment provided under other Sections.

C. Work includes that specified in Section 16010 - Electrical.

1.02 SUBMITTALS REQUIREMENTS

A. Provide submittals and drawings as specified in Section 16010 - Electrical, Submittal Requirements.

PART 2: PRODUCTS

2.01 CONDUIT, RACEWAYS AND WIREWAYS

A. GENERAL - Conduit, raceways, and wireways, wiring methods, materials, installation shall meet all requirements of the NEC, be UL labeled for the application, and meet the minimum following specifications.

1. All wiring shall be installed in conduits, raceways, or wireways when interconnecting equipment and devices.

2. The Contractor shall use special conduit, raceways, wireways, construction methods, and materials as shown on the Contract drawings; which shall take precedence over any general methods and materials specified in this Section.

3. The minimum size conduit shall be 3/4-inch unless indicated otherwise on the Drawings or for special connections to equipment.

4. Conduit stubs for future use shall be capped with coupling and plug.

Identify each end with conduit labels.

5. Conduits to be abandoned that protrude above graded shall be cut flush and filled with grout.

6. Conduit Tags

   a. All conduits listed in the “Conduit and Wire Routing Schedule” shall have conduit tags at both ends of each conduit run. This shall include ends within underground pull boxes.

   b. All conduits shall have temporary tags during construction. Temporary tags may be made from duct tape with hand written ink marking or suitable equivalent. Temporary tags shall be removed by Contractor at time of installation of permanent tags.

   c. Tag material shall be rigid laminated red plastic with white lettering. The size of the tag shall be 1" diameter. No letters are allowed smaller than ¼”. Tags shall be heat and UV resistant, stainproof, electrically non-conductive and non-corroding. Securely fasten tags in place using UV resistant, black plastic tie-wraps. Engrave the tags, on both sides, with the conduit number as listed in the Conduit and Wire Routing Schedule. Labeling shall be neatly installed for visibility and shall be clearly legible. Conduit tags shall be Brady Custom B-1 or approved equal.

7. Supports

   a. Cross section of a single channel shall be 1-5/8" x 1-5/8" and cross-section of a double channel shall be 1-5/8" x 3-1/4". The channel wall thickness shall be 12 gauge as applicable.

   b. One-Hole clamps shall be intended for pipe mounting on support channels and equipped with clamp-backs. The clamps shall be Efcor, Thomas and Betts, Appleton or equal

   c. Spacers, provided to support underground conduits in concrete encasements, shall be plastic. The spacers shall be Carlon, Johns-Manville, Underground Products or equal

   d. Anchors shall be expansion type for securing equipment to concrete foundations, floors and walls. Anchors shall have length identification mark on the exposed end of the bolt. Provide Hilti Kwik Bolt 3, or equal.

   e. Stanchions shall be as shown on the drawings. If a detail is not provided, then the stanchions shall be shop fabricated and welded

4” c-channel, 12” x 12” x ¼” steel base plate, coated with a rust inhibiting primer and top coat of gray polyurethane gloss paint. Attach equipment to the stanchion direct or on a ¼” aluminum sheet sized for the equipment supported.

f. Conduit Hangers shall be trapease construction, with double channel, 3/8-inch rods and nuts. Suspend from suitable structural support.

g. Support material and finish shall be per the following table unless otherwise noted in the drawings. Brackets, fittings and hardware shall be of the same material and finish.

Location	Material
Indoors NEMA 12	Hot dipped galvanized
Outdoors NEMA 4	Stainless Steel
Corrosive areas NEMA4X	PVC bonded, 40 mil, factory applied

h. Channels shall be used for mounting equipment to walls and for supporting conduit runs. Double channel type shall be used for fabricating equipment mounting racks as required and as detailed on the drawings. All field cut surfaces of the channels shall be covered with matching zinc paint or PVC to match adjacent surface.

B. STAINLESS STEEL RIGID STEEL CONDUIT - (SSRS)

1. Manufactured from 316 stainless steel. Conduit and fittings shall meet UL 514B, UL 6, and conform to NEMA RN 2. Conduit shall be capable of being used as an equipment grounding conductor per NEC 250-91b.

2. Provide stainless steel factory sweeps and elbows for 90 degree transitions.

3. Fittings and device boxes shall be Stainless Steel. Calbrite type FS/FD or approved equal.

4. In hazardous locations, fittings shall meet and be listed UL 886.

5. All fittings, hubs, couplings, pulling elbows and connectors shall be threaded-type. Set-screw type and compression-type are not acceptable. All thread conduit is not allowed over 1/2” exposed length. Cover plates shall be stainless steel with sealing gasket in NEMA 3R locations.

6. Conduits shall be fitted with all stainless steel accessories, hubs, insulated grounding bushings, coupling, conduit bodies, and hardware. Provide

Calbrite or approved equal. All grounding bushings shall be tied to the grounding system with properly sized bonding conductors per the NEC code.

C. GALVANIZED RIGID STEEL CONDUIT - (GRS)

1. Manufactured from high-strength steel and hot dipped zinc galvanized inside and out. Conduit and fittings shall meet UL 514B, UL 6, and conform to NEMA RN 2. Conduit shall be capable of being used as an equipment grounding conductor per NEC 250-91b.

2. Provide galvanized rigid steel factory sweeps and elbows for 90 degree transitions.

3. Cast fittings and device boxes shall be malleable iron or aluminum. Appleton type FS/FD or approved equal.

4. In hazardous locations, fittings shall meet and be listed UL 886.

5. All fittings, hubs, couplings, pulling elbows and connectors shall be threaded-type. Set-screw type and compression-type are not acceptable. All thread conduit is not allowed over 1/2” exposed length. Cover plates shall be cast iron with sealing gasket in NEMA 3R locations.

6. Pipe threads shall be treated with T & B "Kopr-Shield".

7. Conduits entering enclosures shall be fitted with insulated grounding bushing; O-Z "HBLG", Appleton "GIB", or approved equal. All grounding bushings shall be tied to the grounding system with properly sized bonding conductors per the NEC code.

D. GALVANIZED RIGID STEEL CONDUIT - PVC COATED (GRS-PVC)

1. Galvanized Rigid Steel conduit with a 40-mil thick polyvinylchloride exterior coating and a urethane interior coating. The bond of the PVC to the substrate must be stronger than the tensile strength of the PVC.

2. Provide PVC coated galvanized rigid steel factory sweeps and elbows for 90 degree transitions.

3. Cast fittings and device boxes shall be malleable iron or aluminum with a 40 mils thick PVC coating. Robroy type FS/FD or approved equal.

4. In hazardous locations, fittings shall meet and be listed UL 886.

5. Provide PVC coated threaded-type fittings, hubs, pulling elbows, couplings, and connectors; set-screw type and compression-type are not

acceptable. Form 8 conduit fittings, ½" through 2", must have a tongue-in-groove gasket to effectively seal out the corrosive elements.

6. Pipe threads shall be treated with conduit interior urethane touch up compound.

7. All junction and metal pull boxes shall be galvanized with exterior surfaces PVC coated to 40 mils thickness.

8. Unistrut, strut clamps, pipe straps, and clamp back spacers, shall have 40 mil thick PVC coating. All mounting anchors shall be stainless steel.

9. Conduits entering enclosures shall be fitted with insulated grounding bushing; OZ/Gedney "HBLG " or approved equal. All grounding bushings shall be tied to the grounding system with properly sized bonding conductors per the NEC code.

10. GRS-PVC conduit to be Robroy Plasti-bond Redhot or approved equal.

E. EMT CONDUIT, ELECTRICAL METALLIC TUBING

1. Thinwall electroplated galvanized steel suitable for indoor and outdoor use with 90 C wires, and conform to UL 797.

2. Where exposed and below 8 feet from floor fittings and device boxes shall be malleable cast iron or aluminum. Appleton type FS/FD or approved equal. Where concealed in walls or ceilings or above 8 feet from floor, device boxes may be stamped steel.

3. All fittings, hubs, couplings, pulling elbows and connectors shall be compression-type, set screw type are not acceptable.

F. PVC CONDUIT, SCHEDULE 40 or 80 (PVC-40, PVC-80)

1. Shall be high impact schedule 40 or 80 polyvinylchloride suitable for use underground, direct burial and for use with 90 C wires, and shall conform to UL 651. Shall be UL listed and labeled for "direct" burial.

2. A copper bonding conductor shall be pulled in each raceway and bonded to equipment at each end with approved lugs.

3. Each underground run shall be placed in a trench with a five (5) inch sand bed evenly compacted on all sides, top and bottom unless otherwise noted.

4. Elbows, and risers shall be per exposed conduit transition detail. PVC conduit is not allowed above ground except where specifically called out on the drawings.

5. PVC fittings shall have solvent-weld-type conduit connections. Fittings and device boxes shall be PVC with factory fabricated conduit connections. Provide Carlon or approved equal.

6. Conduits entering enclosures shall be fitted with a glued male adapter, lock ring and bushing to prevent wire chafing. Conduits entering panels through concrete to an open bottom or entering a pull box shall have a glued end bell fitting.

7. PVC conduit shall be stored on a flat surface and shielded from the sun.

G. LIQUID TIGHT FLEXIBLE NON-METALLIC CONDUIT (up to 2") - (FLEX)

1. Liquid tight flexible Nonmetallic Conduit shall be constructed of flexible PVC and have a smooth inner surface with integral crush resistant reinforcement within the conduit and be designated as a Type LFNC-B (for FNMC-B).

2. Liquid tight Flexible Nonmetallic Conduit shall be sunlight, oil, and flame resistant and approved for the installation of electrical conductors in indoor and outdoor applications.

3. Liquid tight Flexible Nonmetallic Conduit shall be listed to UL standard UL1660.

4. Liquid tight flexible non-metallic conduit shall be installed in accordance with Article 351, Part B of the National Electrical Code (NEC) and other applicable sections of the NEC and/or local electrical codes.

5. Liquid tight Fittings shall be listed for the use with Liquid tight Flexible Nonmetallic Conduit and shall be marked LFNC-B (FNMC-B).

6. Flexible Non-Metallic Conduit shall be Carlon Carflex or equal.

H. LIQUID TIGHT FLEXIBLE METAL CONDUIT (up to 2") - (FLEX)

1. Liquid Tight Flexible Metal conduit shall be highly flexible, moisture and oil-proof with black thermoplastic rubber cover that is extruded over a galvanized flexible steel conduit.

2. Liquid tight Flexible Metallic Conduit shall be sunlight, oil, and flame resistant and be manufactured for extreme temperature environments (-75 deg F to +302 deg F). Conduit shall be approved for the installation of electrical conductors in indoor and outdoor applications.

3. Liquid tight Flexible Nonmetallic Conduit shall be listed to UL standard UL 360.

4. Liquid tight flexible metallic conduit shall be installed in accordance with Article 351, Part B of the National Electrical Code (NEC) and other applicable sections of the NEC and/or local electrical codes.

5. Liquid tight Fittings shall be listed for the use with Liquid tight Flexible Metallic Conduit and conform to UL514B.

   a. Outdoors when extension of GRS-PVC: PVC coated galvanized steel with insulated bushings.

   b. Outdoors when extension of GRS: Galvanized steel with insulated bushings

   c. Indoors: Galvanized steel with insulated bushings.

6. Flexible Metallic Conduit shall be Anaconda HCX or equal.

I. LIQUID TIGHT FLEXIBLE METAL CONDUIT (above 2-1/2") - (FLEX)

1. Liquid Tight Flexible Metal conduit shall be moisture and oil-proof with PVC jacket extruded over a galvanized flexible steel conduit.

2. Liquid tight Flexible Metallic Conduit shall be sunlight, oil, and flame resistant and approved for the installation of electrical conductors in indoor and outdoor applications.

3. Liquid tight Flexible Nonmetallic Conduit shall be listed to UL standard UL 360.

4. Liquid tight flexible metallic conduit shall be installed in accordance with Article 351, Part B of the National Electrical Code (NEC) and other applicable sections of the NEC and/or local electrical codes.

5. Liquid tight Fittings shall be listed for the use with Liquid tight Flexible Metallic Conduit and conform to UL514B.

   a. Outdoors when extension of GRS-PVC: PVC coated galvanized steel with insulated bushings.

   b. Outdoors when extension of GRS: Galvanized steel with insulated bushings

   c. Indoors: Galvanized steel with insulated bushings.

6. Flexible Metallic Conduit shall be Amer-Tite type GP or equal.

2.02 DEVICE BOXES

A. BOXES

1. Device boxes shall be of zinc-galvanized malleable iron or cast aluminum with shape and size best suited for the particular application, rated for the location installed, and shall be supported directly to structure by means of screws, anchors, or bolts.

2. Box dimensions shall be in accordance with size, quantity of conductors, and conduit clearances per NEC articles 370 requirements.

3. Boxes exposed to the weather or in moist locations shall be weatherproof (WP) by means of gasketing under a weatherproof cover.

4. Boxes connected to GRS-PVC conduit runs shall be PVC coated with 40 mil coating.

B. DEVICE PLATES and COVERS

1. Indoor general purpose device plates and covers shall be stainless steel. Plates or covers shall be attached with stainless steel screws. An engraved plastic label denoting circuit breaker number and panelboard name shall be affixed to each cover with #4 stainless steel screws.

2. Weatherproof switch, outlet, and receptacle boxes shall be fitted with gasketed covers rated for wet locations in accordance with NEC 408-8. Each access cover shall have a padlockable cover to maintain security and weatherproof integrity even when a plug is connected to the receptacle. Screws and hinge springs shall be stainless steel. Weatherproof access covers shall be Leviton 5977-CL, Cooper 4966, or approved equal.

2.03 PULL BOXES

A. JUNCTION BOXES

1. Where required for best installation or where specifically called out in the drawings, junction boxes shall have JIC type construction with hinged door, NEMA 4X rating, manufactured of type 304 stainless steel. Door shall be fastened with stainless steel screws. No devices, screws, rivets, or bolts shall protrude through the exterior surface unless specifically shown on the drawings. Boxes shall be Circle AW, or approved equal.

B. UNDERGROUND BOXES

1. Underground pull boxes, where shown or required by length of conduit runs, shall be prefabricated concrete type with “Christy Box” size equivalent or dimensions shown on the Drawings or larger to allow for adequate pull area. Extension sections shall be provided as necessary to

reach the depth of underground conduits. All boxes shall have galvanized steel hold down bolts and hardware. Boxes located in paved areas or other areas which vehicles may travel shall be H/20 loading rated and have traffic covers. Steel covers or lids shall be galvanized and grounded with bonding jumper to the local grounding circuit per NEC. Pull box covers shall be labeled electrical, signal, utility, and telephone, whichever applies. Pull boxes shall be Christy Concrete Products, Brooks or approved equal.

2.04 GROUNDING SYSTEM

A. The utility service ground shall be tied to a building ground grid consisting of a "UFER" and/or ground rod type grounding system.

B. The UFER shall consist of concrete encased bare copper wire conductor laid at 3 foot nominal depth or as detailed on the Contract Drawings. UFER ground shall be located where soil moisture content will be maximized.

C. The ground rod shall consist of not less than 10 continuous feet of 3/4 inch copper coated electroplated high grade carbon steel. The ground rod shall be a Nehring type NCC, Weater 348 or approved equal. The ground rod shall extend up for visible connection of a UL approved “ground clamp” to the ground conductors.

D. The main ground bonding wire from the ground rod shall extend up into the utility service panel with readily visible UL approved "ground clamp" attached to the ground bus

E. Install bare copper ground bond wires from the UFER ground to the various locations shown on the drawings.

F. Ground rod clamps shall be bolt-on type as manufactured by O-Z Gedney type GRC, or approved equal.

G. Grounding conductors shall be sized as shown on the drawings or in accordance with NEC table 250, whichever is larger.

H. Grounding and bonding wires shall be installed in all PVC conduits and nonmetallic raceways and connected to the ground bus and all equipment.

I. Each electrical enclosure shall have a copper ground bus. Screw type fasteners shall be provided on all ground busses for connection of grounding conductors. Ground bus shall be a Challenger GB series, ILSCO CAN series or approved equal.

J. The system neutral conductor and all equipment and devices required to be grounded by the National Electrical Code shall be grounded in a manner that satisfies the requirements of the National Code.

K. The system neutral (grounded conductor) shall be connected to the system's grounding conductor at only a single point in the system. This connection shall be made by a removable bonding jumper sized in accordance with the applicable provisions of the National Electrical Code if the size is not shown on the Drawings. The grounding of the system neutral shall be in the enclosure that houses the service entrance main overcurrent protection.

L. The secondary on all transformers shall be grounded.

M. All raceway systems, supports, enclosures, panels, motor frames, and equipment housings shall be permanently and effectively grounded.

N. All receptacles shall have their grounding contact connected to a grounding conductor.

O. Branch circuit grounding conductors for receptacles or other electrical loads shall be arranged such that the removal of a lighting fixture, receptacle, or other load does not interrupt the ground continuity to any other part of the circuit.

P. Attachment of the grounding conductor to equipment or enclosures shall be by connectors specifically provided for grounding. Mounting, support, or bracing bolts shall not be used as an attachment point for ground conductors.

2.05 PAINTING

A. Raceway System: Paint all exposed conduit, boxes and fittings to match the color of the surface to which they are affixed. Paint finishes shall include proper surface preparation, prime coat and final finish coat. Reference ASTM D 6386 Practice for Preparation of Zinc (Hot-Dip Galvanized) Coated Iron and Steel Product and Hardware Surfaces for Painting.

1. Indoors: Use paint type and color specified for walls and ceilings. Do not paint conduit where paint is not required for surface behind conduit.

2. Outdoors: Paint conduit with outdoor enamel paint with color to match the surface behind conduit or per installation specific detail.

PART 3: EXECUTION

3.01 WORKMANSHIP

A. All work in this Section shall conform to the codes and standards specified in Section 16010 - Electrical.

B. Perform work to remedy non-compliant installations after inspection.

C. The Engineer will halt any work that is found to be substandard or being installed

by unqualified personnel.

3.02 INSTALLATION

A. System:

1. Install all products per 16010 - Electrical, Installation.

B. Rigid Conduits and Ducts:

1. Exposed conduits shall be neatly arranged with runs perpendicular or level and parallel to walls. Bends shall be concentric.

2. Except as expressly indicated or approved, all conduits shall be surface mount on block walls, concealed behind gypsum walls, and buried to required depth below floor slabs.

3. Installation of the GRS-PVC conduits must be in accordance with the manufacturer's installation procedures using recommended tools. To ensure compliance, the installer(s) must be "manufacturer certified" before installation can proceed. Certification available by contacting manufacturer's representative and attending a brief instructional course. Certification shall be available for review by the Engineer or Owner upon request.

4. Repair GRS-PVC utilizing a patching compound or system as provided by the manufacturer of the conduit of the same material as the coating. The entire conduit shall be replaced if the repair exceeds 3" combined length.

5. A maximum of three equivalent 90 degree elbows are allowed in any continuous run. Install pull boxes where required to limit bends in conduit runs to not more than 270 degrees or where pulling tension would exceed the maximum allowable for the cable.

6. Route all above grade conduits parallel or perpendicular to structure lines and/or piping. Conduits installed above grade shall be braced in place with stanchions. Expansion joints shall be installed every 100 feet. Bends shall be concentric.

7. Care shall be exercised to avoid interference with the work of other trades. This work shall be planned and coordinated with the other trades to prevent such interference. Process Pipe, mechanical and HVAC shall have precedence over conduits for routing and space requirements.

8. Seal each bottom entrance conduit into the MCC and other electrical enclosures with plugging compound sealant to prevent the entrance of gasses, insects and rodents. Plugging compound sealant shall be Gardner

Bender Duct Seal or approved equal.

9. Exposed conduit stubs for future use shall be capped with coupling and plugged. Drill hole in plug for pull rope as necessary.

10. Explosion proof seal-off fittings shall be provided on all conduits that enter or leave hazardous areas per requirements of the National Electrical Code, Chapter 5 and UL 886. The seal-off fitting shall prevent hazardous gases and/or flames from passing from one type area to another through the conduit system. Ceramic or other non-asbestos fiber material and sealing compound shall be placed in the fitting to complete the seal.

11. Hazardous location conduit outlet boxes shall be used in hazardous locations for change in direction, access to conductors and as pull and splice boxes.

12. All spare conduits shall have 1/8" nylon pull ropes installed.

C. Flexible Conduit and Ducts

1. Final connections to vibrating equipment such as motors, heaters and fans shall be made with liquid tight flexible conduit.

2. Flexible conduit lengths shall not be greater than 36 inches for sizes up to 2 ½” and 48 inches for 3” and larger conduit.

3. Flexible conduit shall include a ground conductor for equipment bonding in circuits over 30 VDC or as shown in the conduit schedule.

4. Flexible conduit shall only be installed in exposed or accessible locations.

D. Excavation and Back Filling:

1. Trenches for conduit below floor slabs and other underground electrical conduit shall be excavated to the required depths per utility requirements or specific detail. Conduits under floor slabs shall have minimum trench depth to contain bends without any portion of the radius visible at finished grade.

2. Underground conduits outside of structures, excluding utility conduits, shall have a minimum cover of 24 inches except under roadways where minimum cover shall be 30 inches or as otherwise shown in the Contract Drawings. Back filling shall be done only after conduits have been inspected. Excavation and back fill of conduits shall conform to the requirements of other applicable Specifications sections unless modified on plans, and to other entities (Utilities, etc.) as required.

3. Install spacers to support underground conduits. Horizontal and vertical separation shall be maintained by plastic spacers set every four feet. Spacers shall be Carlon Snap-Loc or approved equal.

4. At all times during the installation of the electrical system, the Contractor shall provide barricades, fences, guard rails, etc., to safeguard all personnel, including small children, from excavated trenches.

E. Underground pullboxes:

1. Pullboxes shall be located in areas that will experience the least traffic loading and in the general vicinity as shown in the contract drawings. Boxes in pavement shall be set at final grade and boxes in planter areas shall be set 1" above final grade. Boxes shall not be buried by landscape material.

2. Steel pull box lids shall be grounded per NEC 250.4(A)(5) and 314.3(D).

3. Boxes shall be set on compacted base and base rock to minimize settling of the box over time. If the box is located in a paved traffic area, a 6" x 6" concrete ring shall be poured around the box below the pavement.

F. Device Mounting Heights:

1. Mounting heights of fixtures and devices shall be as follows unless otherwise indicated or when height has to be adjusted to be over or under counter tops.

Wall switches	=>	48 inches
Convenience outlets	=>	18 inches
Telephone outlets	=>	18 inches
Bracket fixtures	=>	7 feet 6 inches

G. Cutting and Patching:

1. The Contractor shall do all cutting and patching required to install his work. Any cutting which may impair the structure will require prior approval by the Engineer. Cutting and patching shall be done only by skilled labor of the respective trades. All surfaces shall be restored to their original condition after cutting and patching.

3.03 WARRANTY

A. Provide warranty as specified in Section 16010- Electrical, WARRANTY.

-END OF SECTION-

SECTION 16120 - WIRE, FUSES & TERMINAL BLOCKS

PART 1: GENERAL

1.01 SCOPE OF WORK

A. The Contractor shall furnish, install, and test wires, fuses and terminal blocks as specified herein.

B. Work includes that specified in Section 16010 - Electrical.

1.02 SUBMITTALS AND DRAWINGS

A. Provide submittals and drawings as specified in Section 16010 - Electrical, Submittal and Drawing Requirements.

PART 2: PRODUCTS

2.01 WIRING AND ELECTRICAL DEVICES

A. GENERAL

1. General

a. Provide wiring and electrical devices specified herein and install field and internal panel wiring as shown on the Contract Drawings. This section applies to all wires or conductors used internal (non-field) to electrical equipment or external for field wiring. Wire quantity and size shall be per “Wire Routing and Conduit Schedule”.

2. Power Distribution

a. All electrical and instrumentation panels shall be equipped with a 120 VAC main power disconnect circuit breaker and power distribution circuit breakers. The main power disconnect breaker shall be a one pole breaker rated at 15 amperes. Distribution circuit breakers shall be single pole. The circuit breakers shall be mounted on a standard DIN rail, and finger safe.

b. For each power distribution circuit breaker, a neutral return terminal block shall be installed at the bottom of the breaker rail. The neutral return terminal block shall be standard DIN rail mounted, and shall be rated to carry up to 15 amperes and accept up to two 12 AWG wires.

c. A spare GFI duplex outlet wired to a non-control circuit shall be provided in each control and instrumentation panel. This outlet shall remain available for future use, shall be labeled "Convenience Receptacle" and shall not be used to power any equipment installed by the Control and Instrumentation panel vendor.

3. Analog Signals

a. Analog signal transmission between electric or electronic instruments shall be 4-20 milliamperes and shall operate at 24 volts DC unless otherwise specified. Milliampere signals shall be current regulated and shall not be affected by changes in load resistance within the unit's rating. Provide powered current isolators wherever the loops' load resistance exceeds the originating current signal transmitter's rating. Associated shunt resistors shall be located on rail-mounted terminal blocks. Exposed resistor leads shall be insulated with heat-shrink tubing.

B. LOW VOLTAGE WIRE AND CABLE (through 600V except instrument signals)

1. General: Low voltage conductors shall be used for power, control, lighting and miscellaneous circuits. This Section applies to all wires or conductors used internal for all electrical equipment or external for field wiring. Wire shall be new, plainly marked with UL label, gauge, voltage, type of insulation, and manufacturer's name.

2. Wire colors and sizes shall not change within the circuit.

3. Wire shall be properly fused or breaker protected at or below the maximum amperage rating allowed by the NEC.

4. Control and Power Wiring:

a. Conductors shall be copper with a minimum of 98% conductivity.

b. Class C stranding. Solid conductors may be used for lighting and receptacle circuits.

c. Insulation of all conductors and cables shall be rated 600 volt (min).

d. Insulation type shall be moisture and heat resistant thermoplastic NEC Type THHN /THWN, rated 90 °C in dry locations and 75 °C in wet locations, for #8 AWG or smaller. Conductors #6 AWG and larger shall be XHHW insulation.

e. Field wire minimum AWG sizes:

1) #12 for wires used for individual conductor circuits 100 volt and above, except for PLC I/O which may be #14 AWG unless otherwise noted.

2) #14 for wires used for individual conductor circuits below 100 volt.

f. Nonfield or equipment wire minimum AWG sizes:

1) #16 for wires used for individual conductor circuits 100 volt and above.

2) #18 for wires used for individual conductor circuits below 100 volt.

5. Instrument wiring:

a. Field: Instrument cables shall have 600V tray cable rated insulation and 100% individual shielded twisted pair #16 conductors with drain wire. Single twisted shielded pair (TSPR) cables shall be Belden 9342, or approved equal. Three wire twisted shielded cables (TS3W) shall be Belden 1119A or approved equal.

b. Non-Field: Instrument cables shall have 300V rated insulation and 100% individual shielded twisted pair #18 conductors with drain wire. Single twisted shielded pair (TSPR.) cables shall be Belden 8760, or approved equal. Three wire shielded cable shall be Belden 8770 or approved equal.

c. Multi-pair instrument cable as required per conduit schedule shall have 300V rated insulation and 100% individual shielded twisted pair #18 conductors with drain wire. Multiple twisted shielded pair (T.S.PR.) cables shall be Belden 9773 thru 9777, or approved equal.

d. Multi-pair cable is not allowed (unless specifically called out in conduit schedule or on plans) for use in field or non-field applications. One T.S.PR cable is required for each signal.

6. Manufacturer Supplied Cables

a. Cables and wiring for special systems provided by the manufacturer with the equipment shall be installed per the manufacturer's recommendations.

7. Telephone/data Cable

a. Telephone,data cable shall consist of 4 pair unshielded twisted pair #24 awg solid conductors. The cable shall be rated Category 5e as defined by IEEE. The cable shall be rated for service (plenum, conduit, wet or dry). Telephone/data cable shall be Belden DataTwist 350, or approved equal

b. Telephone cable shall consist of 12 pair with #19 awg. conductors of solid, soft bare copper. Conductors shall have a thermoplastic cover and shall be color coded per telephone industry standards. Insulated conductors shall be twisted into pairs having varying lay lengths. The cable core shall be covered with a non-hygroscopic core tape and a 0.005 inch copper tape shield. Shield and tape shall be covered with a petrolatum-polyethylene compound for filling all cable intricacies and providing a positive moisture barrier. Filling compound shall be non-toxic and shall not irritate the skin. Cable shall have an outer jacket of black, high molecular weight polyethylene resistant to abrasion, moisture, weather and environmental cracking. Cable shall be suitable for installation in ducts or direct burial and shall be manufactured to REA Specification PE-39.

c. Telephone cable shall be Alpha 3900 or 4000 Series, or approved equal.

C. COLOR CODE

1. All wires #8 and below shall have wire insulation the color specified. Wires #6 and larger may be black with color electrical tape at termination points.

2. No other colors shall be used without prior approval of the Owner.

3. Color code - color code of all wire shall conform with the following table:

WIRES COLOR CODE TABLE

Description	**Phase/Code Letter**	**Field wire or tape color**	**Non-Field Wire Color**
480V, 3 Ph	A	Brown	Brown
	B	Orange	Orange
	C	Yellow	Yellow
240V or 208V, 3 Ph	A	Black	-
	B	Red (Orange if high leg)	-

	C	Blue	-
240 / 120 V, 1 Ph	L1	Black	Black
	L2	Red	-
24V Positive	24+	Pink	Pink
24V Negative	24-	Black	Black
12V Positive	12+	Pink	Pink/white
12V Negative	12-	Black	Black/white
AC Control		Violet	Red (Yellow for foreign circuits)
DC Control		Blue	Blue
Neutral	N	White	White
Ground	G	Green	Green
Shielded Pair	+ -	Clear (White) Black	Red Black

2.02 WIRE MARKING

A. All panel, enclosure and field wiring shall have wire labels on both ends of each wire. Labeling shall be neatly installed for visibility and shall be clearly legible. Each conductor of instrument shielded signal wiring shall be labeled. Wire labels shall be machine printed with on white heat shrinkable tubing. Each label shall fit a minimum 23 characters, 3/16" in height before shrink. Tubing shall be oversized for the wire and shrunk into place using an electric heat gun. The "shrunk" label shall have just enough give to allow the label to be rotated. Hand lettered wire labels are not acceptable and shall be replaced at the Contractor's expense. Provide Brady "PermaSleeve" or approved equal.

1. **Node Style Wire Identification** - All wires that are electrically the same (connected to common termination points) and do not pass through a contact or other switching device shall have the same wire identification. The wire labeling code for each end of the same wire shall be identical.

   a. The wire identification code for **internal panel** wiring shall be the number/letter as designated on the Contract elementary and/or approved shop drawings.

   b. Wire labeling for **field** wiring shall contain the panel/equipment name as a prefix and the termination point name. (I.E. PLC50-A103 or P10-124). The hierarchy of label names is 1) PLC panel name, 2) MCC equipment name, and 3) Equipment name. Therefore, wires from PLC50 to the MCC50 P10 cubicle will be labeled PLC50-XXX. Wires from MCC50 P10 to field pressure switch PSH10 will be labeled P10-XXX.

c. Wire labels shall be exactly per interconnection submittal -- abbreviations determined in the field are not allowed. Abbreviations may be used in the wire label as submitted and approved in the interconnection drawings submittal.

d. Wire labels for lighting and receptacle circuits shall consist of the panel board and circuit number and a unique node number. (I.E. LP#3-A, LP#3-B, LP#3-N)

e. Wire labels may be omitted on “neutral jumpers” less than 8” in length.

2.03 FUSES AND FUSE HOLDER

A. Miniature circuit breakers may be substituted for fuses and fuse holders in AC and DC circuits. Circuit breakers shall be din rail mounted, 13mm width per pole, finger safe pressure plate terminals, and trip ranges from 0.1A to 50A. Provide Allen Bradley 1489-CB, CBI Q series or approved equal

B. Fuses used in circuits 200 VAC and above shall be time- delay, 13/32" x 1-1/2", and have an interrupting rating of 10,000 AIC at 500 VAC. Fuses shall be Bussman type FNQ or approved equal. Fuse holders shall be of the barrier type with fuse puller and rated 30A at 600 VAC. Fuse holders shall be Connectron NDNF1 with PF1 fuse puller or equal.

C. Fuses used in 120 VAC shall be time-delay, 1/4" x 1-1/4", and have a rating of 250 VAC. Fuses shall be Bussman type MDA or approved equal. Fuse-holders shall be of the same manufacturer, series and color as the adjacent terminal blocks and have blown fuse neon indicators. Fuse holders shall be Entrelec ML 10/13.SFL, Allen Bradley 1492-H4 or approved equal.

D. Fuses used in signal and 24 VDC circuits shall be fast acting, 5mm x 20mm and have a rating of 250 VAC. Fuses shall be Bussman type GMA or approved equal Fuse-holders shall be of the same manufacturer, series and color as the adjacent terminal blocks and have blown fuse LED indicators. Fuse holders shall be Entrelec M 4/8.SFDT, Allen Bradley- 1492-H5 or approved equal

E. Fuses shall be sized in conformance with the NEC.

2.04 TERMINAL BLOCKS AND ACCESSORIES

A. Control Panel Terminal Blocks

1. Terminal blocks to be clamp type, 6mm spacing, 600 volt, minimum rating of 30 amps, and mounted on DIN rail. DIN rail shall be same type as used for the relays. Install an extra DIN rail on each type of terminal strip with 20% spare terminals for future additions.

2. Provide terminal blocks with "follower" plates that compress the wires and have wire guide tangs for ease of maintenance. Terminal blocks that compress the wires with direct screw compression are unacceptable. All power, control and instrument wires entering and leaving a compartment shall terminate on terminal blocks with wire numbers on terminals and on both ends of the wires.

3. Terminal Tags and Markers: Each terminal strip shall have a unique identifying alphanumeric code at one end (i.e.: TB1, TB2, etc.). On each terminal strip, terminal numbers shall be assigned starting with #1 at one end, incrementing in alphanumerical order (i.e.: 1,2,3,4....). Numbers shall be assigned to all blocks except grounding blocks. Fuse blocks shall be assigned unique tag numbers such as FU1, FU2. No two fuses shall be assigned the same tag number.

4. Plastic marking tabs shall be provided to label each terminal block. These marking tabs shall have a unique number/letter for each terminal which is identical to the "elementary" and "loop" diagram wire designation. Numbers on these marking strip shall be machine printed and 1/8 inch high minimum.

5. Terminal blocks shall be physically separated into groups by the level of signal and voltage served. Power and control wiring above 100 volts shall have a separate group of terminal blocks from terminal blocks for wiring below 100 volts, intermixing of these two types of wiring on the same group of terminal blocks is not allowed.

6. Provide a ground terminal or connection point for each grounding conductor.

7. Provide a separate common or neutral terminal for every two (maximum) inputs and/or outputs.

8. Terminal blocks shall be Entrelec M4/6, Allen Bradley 1492-W4 or approved equal.

B. MCC – Motor Starter Cubicle Terminal Blocks

1. MCC cubicle terminal blocks shall be pull apart as supplied standard by MCC manufacturer.

C. Power – Power terminal Blocks

1. Backpan mounted termination blocks shall be rated for 600V (min). The power termination blocks shall be rated to accept Copper or Aluminum cable and rated as shown on Contract one-line diagrams. Each termination

block shall be provided with quantity of primary and secondary cable connections as required per installation. The power termination blocks shall be Connectron Square D or approved equal.

2. Unmounted termination blocks shall be constructed of aluminum and suitable for use with Aluminum and copper wire. Size and quantity of cable connections shall be as required for installation. Termination blocks shall be insulated with molded high-dielectric strength plastic covering and eliminate the need for tape insulation of electric connection. The termination block shall have removable access plugs over the wire entry and hex screw ports. Provide NSI Polaris IPL or IPLD Series terminal blocks or approved equal.

D. PANEL GROUND

1. Each electrical, control and instrumentation panel shall be provided with a 1 inch x 0.25 inch x 8 inch (minimum size) solid copper grounding bus bar, mounted on the inside of the enclosure. The grounding bar shall be mounted on insulated standoffs so that no electrical connection is made between the ground bar and the cabinet through the mounting. The ground bar shall be drilled and tapped for a 0.25-20 screws at 0.5 inch interval along its entire length.

2. An un-insulated solid copper #8 AWG ground wire shall be attached between the ground bar and the panel enclosure, and between the ground bar and the mounting panels. The ground connection to the enclosure and panel shall be made by sanding the paint finish off a small area, drilling a hole for a 0.25 inch bolt and mounting a 0.25-20 bolt to the panel to serve as grounding stud. The grounding stud shall be attached with a nut and flat washers on both sides of the enclosure/panel, and with an inside tooth star lock washer next to the panel surface. The star lock washer shall be on the inside surface of the enclosure, and the front surface of the mounting panel. The grounding wire shall be secured to the stud with a nut and inside tooth star lock washer. These grounding points shall be located within 12 inches of the bottom to the grounding bar. Each terminal strip rail shall be individually grounded by means of a #12 AWG wire to the ground bus. The PLC rack, power supply, lightning arrestor shall be similarly grounded according to the manufacturer's recommendations.

2.05 ELECTRICAL TAPE / SHRINKABLE INSULATORS

A. Vinyl tape shall be 7 mil, 600 volt rated, flame retardant, hot and cold weather resistant conforming to UL510. Provide 3M Scotch Super 33+ vinyl tape or equal

1. Vinyl tape for color coding shall be 7 mil, ¾” width, vinyl tape

conforming to UL 510. Provide 3M Scotch 35 vinyl tape or equal.

B. Rubber Tape: EPR rubber, 90 deg C continuous rated. Provide 3M 130C rubber tape or equal.

C. Varnished Cambric Tape: Adhesive backed, 7 mil, bias cut cotton tape, coated with yellow insulating varnish. Provide 3M Scotch 2510 or equal.

D. Shrinkable insulators shall be heat shrinkable, polyolefin thick wall sleeves, end caps and cable repair sleeves are designed for use in splicing, sealing and re-jacketing of direct bury secondary cables. The insulators shall comply with UL 486D and be rated up to 1000 Volts. They shall provide long-term reliable performance overhead, underground or submerged with mechanical and environmental protection. Shrinkable insulators shall be 3M ITCSN or 3M IMCSN per manufacturer instructions for the application or approved equal.

PART 3: EXECUTION

3.01 WORKMANSHIP

A. All work in this Section shall conform to the codes and standards specified in Section 16010 - Electrical.

3.02 INSTALLATION

A. System:

1. Install all products per 16010 - Electrical, INSTALLATION, GENERAL.
2. The panels shall be completely factory wired and tested before shipment.
3. All spare PLC input / output points shall be wired to terminal blocks.
4. A minimum of 20% spare unwired terminals shall be provided in each panel.

B. Wiring Methods:

1. Wiring Separation: Wires carrying 100 volts and above shall be physically separated from lower voltage wiring by using separate bundles or wire ways with sufficient distance to minimize the introduction of noise, crossing only at 90 degree angles.

2. Harness: All wiring shall be neatly bundled and laced with plastic tie-wraps, anchored in place by screw attached retainer. Where space is available, wiring shall be run in slotted plastic wireways with dust covers. Wireways shall be sized such that the wire fill does not exceed 60%. Tie-wraps shall be T&B TY-RAP or approved equal.

3. Retainers: Wireways, retainers, and other devices shall be screw mounted with round-head 316 stainless steel screws or mechanically mounted by push-in or snap-in attachments. Glue or sticky back attachment of any type or style shall not be used. Retainers shall be T&B TC series or approved equal.

4. Hinge Loops: Where wiring crosses hinged surfaces, provide a "U" shaped hinge loop protected by clear nylon spiral wrap. The hinge loop shall be of sufficient length to permit opening and closing the door without stressing any of the terminations or connections. Spiral wrap shall be Graybar T25N or approved equal.

5. Routing: Wires and cable shall be routed along the shortest route between termination points, excepting routes which would result in routing 120 VAC and other wires and cables in the same duct or bundle. Wires and cables shall have sufficient length to allow slack and to avoid any strain or tension in the wire or cable.

   a. Wires shall be routed in slotted plastic wireways with snap covers. Wires carrying 120 VAC shall be separated as much as possible from other wires and signal cables, and shall be routed only in ducts for 120 VAC. If the power wiring has to cross the signal wiring, the crossing shall be as close to a right angle as possible. Wireways for 24 VDC wiring shall be used for all other wires and cables. Routing of 120 VAC in combined wireways shall be minimized. Wires and cables shall be placed in the wireways in a straight, neat and organized fashion and shall not be kinked, tangled or twisted together. Additional wire ducting shall be provided for use by the electrical subcontractor for routing field wires to their landing points in the each electrical and instrumentation panel.

   b. Provide 2” minimum separation between wireway and terminal blocks.

   c. Wiring not routed in wireways shall be neatly bundled, treed, and laced with plastic ties.

C. Wire terminations

1. Single wire and cable conductors shall be terminated according to the requirements of the terminal device as follows:

   a. Crimp-on terminals: shall be UL listed, self-insulating sleeve type, with ring or rectangular type tongue, suitable for the size and material of the wire to be terminated, and for use with either solid

or stranded conductors.

b. Terminal Blocks: Remove the last +/- 0.25 inches insulation from of the conductor and insert it under the pressure plate to full length of the bare portion of the conductor. Tighten the screw to close the pressure plate onto the conductor. No more than two conductors shall be installed in a single terminal. All strands of the conductor shall be captured under the pressure plate.

c. Screw-less terminals: wire shall be stripped back and inserted per the terminal manufacturer's instructions.

d. Motors with pigtail leads: Install terminal connectors on the motor pigtails and the cable to be connected. Terminals shall be non-insulated crimp-on type applied with a rachet-type crimping tool. The terminals shall be bolted together with a nut, bolt and lock washer combination. The connection shall be booted with 3/16" thick rubber boot. Boot kit shall include rubber boot for each motor connection, plastic locking pins, silicone grease, and mastic sealing strips, Boot kits shall be 3M Motor Lead Pigtail Splice #5302, #5303,or #5404 as applicable for wire size applied.

2. When stripping insulation from conductors, do not score or damage conductor.

3. The drain wire of shielded cables shall be covered with insulating tubing along its full bare length between the cable jacket and the terminal lug or terminal pressure plate.

4. Heat shrink shall be placed on ends of shielded cable to cover foil.

5. Condulets with wire nut connections shall be supplied for wire termination to devices with leads instead of terminals. (i.e. solenoid valves, level probe, etc.)

D. Wire Splicing

1. No wires shall be spliced without prior approval by the Engineer.

2. Where splices are allowed or approved by the Engineer they shall conform to the following:

a. Wire splicing devices shall be sized according to manufacturer's recommendations.

b. Splices of #10 and smaller, including fixture taps, shall be made with nylon self-insulated twist on wire nuts; T & B "Piggys", Ideal

"Wing-Nut" or approved equal.

c. Splices of #8 and larger shall be hex key screw, two way connectors, insulated with molded high-dielectric strength plastic; NSI Polaris IPL or IPLD Series terminal blocks or approved equal.

d. Non-Motor Splices #10 and smaller in underground pullboxes shall have wire-nut connections inside and insulator tube which are sealed with non-hardeninig silicone based sealant that protects the connection from moisture and corrosion. The wire nut shall be pushed to the bottom of the tube and a locking cap closed to prevent moisture and dirt from entering the tube. The tube is factory filled with sealant and UL listed for waterproof connections. Provide 3M DBY-6 or DBR-6 or equal.

e. Non-Motor Splices #6 and smaller in underground pullboxes shall have wire-nut connections which are sealed with non-hardeninig silicone based sealant that protects the connection from moisture and corrosion. The wire nuts shall be factory filled with sealant and UL listed for waterproof connections. Provide Ideal Model 60 or equal.

f. Non-Motor Splices #4 and larger in underground pullboxes shall have double hex crimp barrel connections applied with adhesive/sealant filled heat shrinkable rubber insulation applied over the exposed connection. The cross-linked polyolefin shrink tube shall extend 4” on each side of the exposed connection minimum. Heat shrink tubing shall be 3M ITCSN or equal.

E. Wire Installation

1. Exercise care in pulling wires and cables into conduit or wireways so as to avoid kinking, stressing the cables, or damaging the insulation. Use a UL listed pulling compound for lubrication within conduits as necessary. The raceway construction shall be complete and protected from weather before cable is pulled in. Swab conduits before installing cables and exercise care in pulling, to avoid damage to the insulation or conductors.

2. All wire and cables (with the exception of coaxial antenna cable) shall be installed within UL listed raceways or enclosures. Install all wires and cables in one continuous length unless splices are per contract drawings, required to connect equipment or submitted and favorably reviewed.

3. Bundle incoming wire and cables in panels. Zip-tie at intervals of 2” and neatly spread into trees and connect to their respective terminals. Allow sufficient slack in cables for alterations in terminal connections. Do not

bundle, tape or tie wires within conduits.

3.03 WARRANTY

A. Provide warranty as specified in Section 16010- Electrical, WARRANTY.

-END OF SECTION-.

SECTION 16250 - AUTOMATIC TRANSFER SWITCH

PART 1: GENERAL

1.01 SCOPE OF WORK

A. The Contractor shall supply the automatic transfer switch (ATS) as specified herein.

B. The ATS scope of work includes:

1. Providing and installing one automatic transfer switch of rating shown on Contract Drawings.
2. Submittal data and drawings.
3. Startup assistance.
4. Factory and field testing.
5. Operation and maintenance manuals.
6. Warranty of all components.

C. Startup and configuration of ATS with installed voltages and loads.

D. Factory and field testing per Section 16600. Furnish all required labor, materials, safety equipment, transportation, test equipment, incidentals and services to perform factory and/or field testing

1.02 RELATED SECTIONS

A. Section 16010 – Electrical
B. Section 16120 – Wire, Fuses and Terminal Blocks
C. Section 16600 – Factory and Field Testing

1.03 JOB CONDITIONS

A. Equipment shall perform in location as shown in the drawings and as described in the job conditions listed in Section 16010 – Electrical.

1.04 SUBMITTALS REQUIREMENTS

A. Provide Submittals as specified in Section 16010.

B. Include a record of each VFD parameter available to be changed by the user. The list shall include factory defaults and space for entered values.

1.05 OPERATING AND MAINTENANCE INFORMATION

A. Provide operation and maintenance instructions as specified in Section 16010.

B. Include a record of each ATS parameter setup during startup and testing and place a copy of setting in each O & M manual.

PART 2: PRODUCTS

2.01 AUTOMATIC TRANSFER SWITCH

A. General:

1. The ATS shall be UL listed in accordance with UL 1008 and be labeled in accordance with that standard's 1½ and 3 cycle, long-time ratings. ATSs which are not tested and labeled with 1½ and 3 cycle (any breaker) ratings and have series, or specific breaker ratings only, are not acceptable.

2. The ATS shall be rated to close on and withstand 42,000 RMS symmetrical short circuit amperes at the ATS terminals or otherwise shown. Provide overcurrent protection as shown on the Contract drawings.

3. The ATS manufacturer shall be certified to ISO 9001 International Quality Standard and the manufacturer shall have third party certification verifying quality assurance in design/development, production, installation and servicing in accordance with ISO 9001.

4. ATS types utilizing components of molded-case circuit breakers, contactors, or parts thereof, are not acceptable.

5. The switch assembly shall be installed in a NEMA enclosure located as shown on Contract drawings.

6. The automatic transfer switch shall be an ASCO Model 7000 Zenith ZTSD, each with options to meet specified requirements, or approved equal.

B. Switch Unit:

1. The transfer switch unit shall be electrically operated and mechanically held. The electrical operator shall be solenoid operated and only momentarily energized to minimize power consumption and heat generation.

2. The transfer switch shall feature a delayed transition mode. The switch shall remain in the neutral position (neither emergency nor normal) until the associated time delays have expired and allow the switch to complete the transfer.

3. The switch shall be 3 pole double-throw with inherently interlocked

construction. A solid neutral shall be provided for all systems.

4. Wide contact gaps shall be provided to insure positive isolation of the normal and emergency power sources.

5. The switch shall be fully rated for amperage shown on Contract Drawings, for switching all types of loads including induction motors. The ratings shall apply to the voltage and mounting arrangement as shown in the drawings.

6. The main power contacts shall have silver alloy contact construction featuring a wiping action each time the switch is operated. Arc chutes shall be utilized to contain the inherent spark created when switching under load.

7. The main contact design shall allow repeated making and breaking of rated full load current, with a combination of motor and other loads and without damage or undue wear to the contacts.

8. All main power contacts and auxiliary contacts shall be mechanically driven from a common actuator shaft.

9. The bus shall be constructed of silver plated copper.

10. Inspection of all contacts, linkages and moving parts shall be possible from the front of the switch without disassembly of operating linkages and without disconnection of power conductors.

11. All switch and relay contacts, coils, mechanical linkages, and control elements shall be serviceable or removable from the front of the mounted switch or accessory assembly without removal of the switch or assembly from the compartment and without disconnection of the power cables or control wiring.

12. The switch shall have a manual operating handle for maintenance purposes.

13. Compression screw type solder-less terminals or lugs shall be provided for connecting all external line & load power cables and control wiring. All connections shall be accessible from the front without removal of internal components.

14. A terminal strip shall be provided for terminating all control wiring. All terminals shall be numbered with machine printed lettering matching the wire number of the terminated wire.

15. All control wiring shall have permanent identification at each point of

connection. Wire identification shall be by machine printed numbered wiring sleeves. Electrically common wires shall have the same wire number. Electrically different wiring shall have unique wire numbers.

16. Control wiring shall be neatly bundled and secured in place by plastic cable ties. Wiring shall be protected with plastic spiral wrap where it crosses over a hinge to the door.

C. ATS CONTROL PANEL

1. A control panel shall be provided to direct the operation of the transfer switch. The modules sensing and logic shall be a controlled by a built-in microprocessor. Control panels that do not utilize microprocessor electronics to control the operation of the switch are not acceptable.

2. A four line, 20 character LCD display and keypad shall be an integral part of the controller for viewing all available data and setting desired operational parameters. Operational parameters shall also be available for viewing and limited control through the serial communications input port.

3. The controller shall be connected to the transfer switch by an interconnecting wiring harness. The harness shall include a keyed disconnect plug to enable the controller to be disconnected from the transfer switch for routine maintenance.

   a. Sensing and control logic shall be provided on multi-layer printed circuit boards.
   b. The panel shall be enclosed with a protective cover and be mounted separately from the transfer switch unit for safety and ease of maintenance. The protective cover shall include a built-in pocket for storage of the operator's manuals.

4. A single controller shall provide twelve selectable nominal voltages for maximum application flexibility and minimal spare part requirements. Voltage sensing shall be true RMS type and shall be accurate to ± 1% of nominal voltage. Frequency sensing shall be accurate to ± 0.2%.

   a. The under-voltage of each phase of the normal source shall be monitored, with pickup adjustable from 85% to 100% of nominal and the dropout adjustable from 75% to 98% of pickup setting, both in increments of 1%. These adjustments shall be factory set at 85% dropout, and 90% pickup.
   b. The voltage of each phase of the emergency source shall be monitored, with pickup adjustable from 85% to 100% of nominal. This adjustment shall be factory set at 95% pickup.
   c. Frequency sensing of the emergency source shall be provided, with

pickup adjustable from 90% to 100% of nominal. This adjustment shall be factory set at 97% pickup.

d. The control panel shall meet or exceed the voltage surge withstand capability in accordance with IEEE Standard 472-1974 (ANSI C37.90a 1974) and the withstand voltage test in accordance with the proposed NEMA Standard ICS1-109.21.

5. The transfer switch control panel shall be capable of operating over a temperature range of -20 to +60 degrees C.

6. The control panel shall include the following field adjustable time delays:

a. Time delay to override momentary normal source outages, adjustable from 0 to 5 minutes. This adjustment shall be field set to place emergency generator on-line in 1 minute.

b. Transfer to emergency time delay for controlled timing of load transfer to emergency, adjustable from 0 to 5 minutes. This adjustment shall be field set switch position in 5 seconds after power has stabilized.

c. Emergency source failure time delay to ignore momentary transients during initial generator set loading, adjustable from 0 to 6 seconds. Set at 2 seconds.

d. Retransfer to normal time delay, adjustable 0 to 60 minutes. This adjustment shall be factory set at 5 minutes. The time delay is automatically bypassed if the emergency source fails and normal source is acceptable.

e. Unloaded running time delay for emergency engine generator cooldown, adjustable from 0 to 60 minutes. This adjustment shall be factory set at 5 minutes.

f. Delayed transition time delay for setting the dead time when all power is removed from the load side of ATS, adjustable 0 to 5 minutes. Set at 1 minute.

g. Generator Exercise Timer: Timer provided for operator adjustment of day of week, time of day and run duration for exercising the generator under operating loads by activating the automatic transfer switch. . Timer shall be mounted on the ATS outer deadfront door.

h. The controller shall provide an integral engine exerciser. The timer shall be field set by the Contractor with date and time as determined by the Owner. The engine exerciser shall allow the user to program up to seven different exercise routines. For each routine, the user shall be able to:

1) Enable or disable the routine.
2) Enable or disable transfer of the load during routine.
3) Set the start time of day, day of week, week of month,

alternate or every time start, duration of run.

4) At the end of the specified duration the switch shall transfer the load back to normal and run the generator for the specified cool down period. A 10-year life battery that supplies power to the real time clock in the event of a power loss will maintain all time and date information.

7. The controller shall commit-to-start engine which requires the engine to reach proper output and run at least the duration of the cooldown setting, regardless of whether the load is transferred.

8. Provide interface relays or main switch follower contacts to comply with I/O interface requirements as defined in the P&ID diagram. Interfacing relays shall be industrial grade plug-in type with dust covers. Interface connections shall be wired to backpan terminal blocks. At minimum, the switch shall have the following unused I/O contacts available:

   a. Switch in Normal – SPDT rated 10 amps, 120 VAC
   b. Switch in Emergency – SPDT rated 10 amps, 120 VAC
   c. Engine starting contact -- DPDT gold-flashed contacts rated 10 amps, 32 VDC
   d. Emergency Power available – SPDT rated 10 amps, 120 VAC
   e. Normal Power available – SPDT rated 10 amps, 120 VAC

9. Terminals shall be provided for a remote contact which opens to signal the ATS to transfer to emergency and for remote contacts which open to inhibit transfer to emergency and/or retransfer to normal.

10. Provide separate LED signal lights with nameplates indicating the following:

    a. Utility power is available (green)
    b. Generator power is available (red)
    c. ATS is connected to Utility source (green)
    d. ATS is connected to the Generator source (red)
    e. ATS in neutral position (wht)

11. A three position momentary-type test switch shall be provided for the test / automatic / reset modes:

    a. Test: simulate normal source failure
    b. Automatic: normal operation
    c. Reset: bypass the time delays on either transfer to emergency or retransfer to normal.

12. All adjustments shall be field adjustable without the use of tools, meters,

power supplies, or special test equipment and can be made safely without personal exposure to live parts

13. Each adjustment resolution shall be settable within minimum increments of 1%.

14. Repetitive accuracy of timer, voltage and frequency settings over a temperature range of –20° C to 70° C shall be within +/-2%.

15. The control panel programming shall be lockable via password protection.

16. The wire harness for connection of the control panel to the transfer switch shall have sufficient length to reach between the mounting locations shown on the Contract drawings.

17. Provide the following displays on the controller:

    a. Event log to display 99 logged events with the time and date of the event, event type and event reason.
    b. Total number of ATS transfers.
    c. Number of ATS transfers caused by power source failures.
    d. Total number of days ATS has been in operation.
    e. Total number of hours that the normal and emergency sources have been available.

PART 3: EXECUTION

3.01 WORKMANSHIP

A. All work in this Section shall conform to the codes and standards specified in Section 16010 - Electrical.

B. Requirements of Related Electrical Sections apply to design, documentation construction and assembly of Automatic Transfer Switches.

C. Perform work to remedy non-compliant installations after inspection.

3.02 FIELD ASSISTANCE

A. Testing, checkout and start-up of the ATS equipment shall be performed under the technical direction of a factory trained authorized manufacturer representative.

1. The setup and programming of the ATS shall be provided by a factory-trained representative who is authorized by the ATS manufacturer to perform the startup. This setup and programming shall be done prior to and during the first application of power.

2. Provide testing as specified in Section 16600 – Factory and Field Testing.

B. Provide 1 hour of "ATS Setup" Training on operating and maintenance procedures.

3.03 WARRANTY

A. Provide warranty as specified in Electrical Section 16010 – Warranty.

END OF SECTION

SECTION 16470 - PANELBOARD & POWER TRANSFORMER

PART 1: GENERAL

1.01 SCOPE OF WORK

A. The Contractor shall supply panelboards and power transformers as specified herein and as shown in the Contract Drawings.

B. The Contractor shall perform complete startup and testing services for the panelboard and power transformer per Section 16600 – TESTING.

C. Work includes that specified in Section 16010 – Electrical.

D. Reference drawings for panelboard and transformer location – electrical structures or stand-alone. If within electrical structures, the Contractor shall supply the electrical section with factory installed panelboard and transformer. If stand-alone, the Contractor shall install individual components with enclosures as specified herein.

1. The quantity of breakers with size and number of poles as shown on panelboard schedules.
2. Submittal data and drawings.
3. Startup assistance.
4. Panelboard testing.
5. Operation and maintenance manuals.
6. Warranty of all components of the panelboard and power transformer.

1.02 SUBMITTALS AND DRAWINGS

A. Provide submittals and drawings as specified in Section 16010 – Electrical, Submittal Requirements.

B. Provide ratings and characteristics including voltage, temperature rise, KVA, efficiency, materials of construction, NEMA enclosure rating, voltage taps, and impedance.

C. Provide catalog cuts for circuit breakers and devices.

D. Submit panelboard schedule for approval.

1.03 OPERATING INSTRUCTIONS

A. Provide operating instructions as specified in Section 16010 – Electrical, OPERATING INSTRUCTIONS.

PART 2 – PRODUCTS

2.01 PANELBOARDS

A. General

1. The Contractor shall furnish panelboards of a type indicated on the one-line Contract drawings and specified herein.

2. Panelboards shall comply with the applicable sections of UL, NEC, and NEMA and shall be Cutler Hammer Pow-R-Line, Square D, ITT or approved equal.

3. A machine-typed circuit directory with clear plastic cover shall be supplied mounted on the inside of door in a frame when equipment is shipped. Circuit directory shall be as approved in the Submittal.

B. Interiors

1. Interiors shall be completely factory assembled with bolt-on devices.

2. Branch circuit breakers shall include padlock lockout provisions. Provide Cutler Hammer QLPB123PL or approved equal. Main breakers shall include padlock hasp suitable for frame size.

3. Full size insulated neutral bars shall be included. Neutral busing shall have a suitable lug for each outgoing feeder requiring a neutral connection.

4. Main bus bars shall be plated copper seized in accordance with UL standards to limit temperature rise on any current carrying part to a maximum of 50 degrees C above an ambient 40 degrees C maximum.

5. A copper ground and neutral bus shall be included in all panelboards with terminal screws.

C. Boxes

1. Provide minimum gutter space in accordance with the National Electric Code. Where feeder cables supplying the mains of a panel are carried through its box to supply other electrical equipment, the box shall be sized to include the additional required wiring space. At least four interior mounting studs with adjustable nuts shall be provided.

D. Trims

1. Provide a hinged door over all circuit breaker handles. Doors in panelboard trims shall not uncover any live parts. Doors shall have a catch, lock and trim.

2. Surfaces of the trim assembly shall be properly cleaned, primed and a finish coat of gray ANSI 61 or 49 or to Switchboards and MCCs.

3. Surface trims shall be same height and width as box for surface mount, and ¾" (min) beyond box on all sides for flush mount.

E. Panelboard Ratings

1. Panelboards shall have voltage, phase and short circuit (AIC) ratings as shown on the drawings.

2. Breakers shall be a minimum of 100 ampere frame. Breakers 15 through 100 amperes trip size shall take up the same pole spacing.

3. Panelboards shall be labeled with a UL short circuit rating. When series ratings are applied with integral or remote upstream devices, a label shall be provided. Series ratings shall cover all trip ratings of installed frames. It shall state the conditions of the UL series ratings including:

a. Size and type of upstream device
b. Branch devices that can be used
c. UL series short circuit rating

2.02 POWER TRANSFORMER

A. The power transformer shall be ventilated dry type. Voltage and KVA ratings shall be as shown on the Contract Drawings. The transformer shall be as manufactured by Cutler Hammer, Jefferson, ACME, Square D, G.E., or approved equal.

B. Coils shall be manufactured of electrical grade copper and shall be adequately braced for short circuit ratings and defined in ANSI and NEMA standards.

C. Transformers rated 31KVA and above shall have two 2½ percent taps above and below normal full capacity (ANFC and BNFC).

D. The transformer shall carry full load continuously at rated voltage and frequency without exceeding the average temperature rise of 115°C above an ambient temperature of 40°C. Insulation shall be rated for 220°C (UL class 220°C).

E. For transformers installed within electrical equipment, vibration isolators shall be installed between the transformer and its mounting surface to reduce case vibration and associated noise.

F. For stand alone transformers, the transformer housing shall be securely fastened to the mounting surface with bolted connections sized appropriately to withstand seismic zone 4 forces.

G. The transformer shall be finished with two coats of enamel to resist rust and corrosion.

H. Transformers located inside electrical structures or enclosures shall be provided with adequate ventilation for heat removal as required.

I. Transformer neutral shall be grounded in accordance with Article 250-26 and 450-10 of NEC and any applicable local ordinances. Installation and protection of the transformer grounding conductors and attachments shall be per NEC 250-24.

PART 3 – EXECUTION

3.01 WORKMANSHIP

A. All work in this Section shall conform to the codes and standards specified in Section 16010 – Electrical.

3.02 INSTALLATION

A. Provide installation as specified in Section 16010 – Electrical, INSTALLATION.

3.03 FIELD ASSISTANCE

A. Provide testing as specified in Section 16600 – FACTORY AND FIELD TESTING.

3.04 WARRANTY

A. Provide warranty as specified in Section 16010 – Electrical, WARRANTY.

END OF SECTION

SECTION 16481 - VARIABLE FREQUENCY DRIVE

PART 1: GENERAL

1.01 SCOPE OF WORK

A. Provide each variable frequency drive as shown on elementary and one-line drawings. Variable frequency drive shall be provided with full speed bypass, harmonic conditioner, line and/or load reactor, RFI filter and/or other accessories where shown on Contract Drawings. All VFDs shall be of the same manufacturer.

B. Provide enclosure (and wire chase as required) for top or bottom feed conduit connection as shown in the drawings. Enclosure size shall not exceed the space allocated in the drawings for such use.

C. Provide cooling/ventilation system, mounting hardware, associated components, devices, and field control stations. Some components may be specified in other division 16 sections such as terminal blocks, wire, buttons, etc.

D. Installation of the VFD system with components as specified in Section 16010 - Electrical.

E. The VFD scope of work includes:

1. Providing and installing VFD(s) of rating shown on Contract Drawings.
2. Submittal data and drawings.
3. Startup assistance.
4. Factory and field testing.
5. Operation and maintenance manuals.
6. Warranty of all components.

F. Startup and configuration of VFD with actual motor load.

G. Factory and field testing per Section 16600. Furnish all required labor, materials, safety equipment, transportation, test equipment, incidentals and services to perform factory and/or field testing

1.02 RELATED SECTIONS

A. Section 16010 – Electrical
B. Section 16120 – Wire, Fuses and Terminal Blocks
C. Section 16600 – Factory and Field Testing

1.03 JOB CONDITIONS

A. Equipment shall perform in location as shown in the drawings and as described in the job conditions listed in Section 16010 – Electrical.

1.04 SUBMITTALS REQUIREMENTS

A. Provide Submittals as specified in Section 16010.

B. Include a record of each VFD parameter available to be changed by the user. The list shall include factory defaults and space for entered values.

1.05 OPERATING AND MAINTENANCE INFORMATION

A. Provide operation and maintenance instructions as specified in Section 16010.

B. Include a record of each VFD parameter setup during startup and testing and place a copy of setting in each O & M manual.

PART 2: PRODUCTS

2.01 QUALITY

A. All equipment shall be designed for the service intended and shall be of rugged construction, of ample strength for all stresses which may occur during fabrication, transportation, erection, and continuous or intermittent operation. All equipment shall be adequately stayed and braced and anchored and shall be installed in a neat and workmanlike manner. Appearance and safety, as well as utility, shall be given consideration in the design of details. All components and devices installed shall be standard items of industrial grade, unless otherwise noted, and shall be of sturdy and durable construction suitable for long, trouble-free service. Light duty, fragile, and competitive grade devices of questionable durability shall not be used.

B. Products that are specified by manufacturer, trade name, or catalog number establish a standard of quality and do not prohibit the use of equal products of other manufacturers provided they are favorably reviewed by the Owner and/or Engineer prior to installation.

C. Underwriter's Laboratories (UL) listing is required for all substituted equipment when such a listing is available for the first named equipment.

2.02 QUALITY

A. All equipment and materials shall be new and the products of reputable suppliers having adequate experience in the manufacture of these particular items. For uniformity, only one manufacturer will be accepted for each type of product.

B. All equipment shall be designed for the service intended and shall be of rugged

construction, of ample strength for all stresses which may occur during fabrication, transportation, erection, and continuous or intermittent operation. All equipment shall be adequately stayed and braced and anchored and shall be installed in a neat and workmanlike manner. Appearance and safety, as well as utility, shall be given consideration in the design of details. All components and devices installed shall be standard items of industrial grade, unless otherwise noted, and shall be of sturdy and durable construction suitable for long, trouble-free service. Light duty, fragile, and competitive grade devices of questionable durability shall not be used.

C. Products that are specified by manufacturer, trade name, or catalog number establish a standard of quality and do not prohibit the use of equal products of other manufacturers provided they are favorably reviewed by the Owner and/or Engineer prior to installation.

D. Underwriter's Laboratories (UL) listing is required for all substituted equipment when such a listing is available for the first named equipment.

2.03 VARIABLE FREQUENCY DRIVE

A. This specification is based on Allen Bradley Power Flex 700, no equal.

B. The VFD shall be of the latest technology used to control and maintain a process variable (level, flow, pressure, speed, etc.) by varying the motor speed. The VFD shall be available from a single manufacturer in the horsepower range of 1 to 500 HP.

1. Rectification

a. Rectification - AC line power shall be first converted to a fixed DC voltage utilizing one or more full-wave diode bridge or equivalent SCR full-wave bridge used only for controlling the rate of charging the capacitors upon power initialization. This shall be done to provide an input displacement power factor of 0.96 or greater throughout the entire speed range and provide insensitivity to noise already present on the AC line.

b. DC link - A DC link shall then couple the bridge rectifier DC voltage to the inverter Section via a copper bus. The DC link shall include capacitors to smooth the ripple present on the rectifier output plus inductors to limit the rate of change of current during output short circuit conditions.

c. DC link choke – An internal DC link choke shall be provided to attenuate for harmonics and provide improvement to the power factor.

d. Inverter - The third step shall invert the fixed DC link voltage to a three-phase adjustable voltage, adjustable frequency output utilizing power transistors in the inverter circuit. The complete VFD assembly shall be capable of attaining input to output power transfer efficiencies of greater than 96% percent throughout the motor speed range of 50 through 100 percent. A pulse width modulation (PWM) switching technique shall be used to provide a nominal simulation of a true sine wave. This modulation technique shall ensure low harmonic content, smooth low speed operation, and adequate starting torque. Other modulation methods are not acceptable. The output voltage shall vary proportionally with the output frequency to maintain a constant Volts/Hz value up to 60 Hz, except during voltage boost operation. Above 60 Hz, the voltage shall remain at a constant nominal value.

C. Load - The VFD shall be designed to continuously operate the following motor/pump load:

1. Motor NEMA design B, squirrel-cage induction or specialty specific use motor per Mechanical Division Specification as shown in drawings.
2. Horsepower at full speed R.P.M. of submitted/approved motor.
3. Voltage, 230/460 VAC, three phase, 60 Hz.
4. Service factor, 1.15 S.F.

D. Input Power - The VFD shall be rated to continuously operate under the following input power conditions:

1. The Drive shall be rated to operate from 3-phase power at nominal voltage (230VAC or 500VAC +10/-10% as shown in drawings), 48Hz to 63Hz.
2. The overvoltage trip level shall be a minimum of 30% over nominal, and the undervoltage trip level shall be a minimum 35% under the nominal voltage.
3. Three phase, phase rotation insensitive.
4. Displacement power factor, 0.95 lagging at all loads and speeds above 10% rated load.

E. Output Power - The VFD shall be rated to continuously operate while providing the following output power conditions:

1. Voltage, 0 to 480 VAC.
2. Frequency, 3 to 60 Hz.
3. Continuous motor horsepower.
4. VFD amp output (minimum).
5. Continuous current - as shown in drawings or 125% of rated motor nameplate amps, whichever is higher.
6. Short time current, 120% of continuous rated current for a minimum

duration of 1 minute per every 5 minutes running.

7. Short time current, 150% of continuous rated current for a minimum duration of 2 seconds per every 15 seconds running.
8. Waveform - sine coded PWM.
9. The drive's switching pattern shall be continually adjusted to provide optimum motor flux and avoid the high-pitched audible noise.
10. Diodes and transistors shall have a minimum withstand of 1,200 peak inverse voltage (PIV).

F. Environmental - The VFD shall be rated to continuously operate under the following environmental conditions:

1. Ambient temperature, 32°F to 122°F (0°C to 50°C).
2. Altitude, no derating below 3,300 ft.
3. Relative humidity, 95% non-condensing.
4. The drive shall be protected from atmospheric contamination by chemical gasses and solid particles pre IEC 721-3-3, classes 3C2 and 3S2.
5. The drive shall be protected from vibration per IEC 68-2-6 (max. sinusoidal displacement 1 mm, 5Hz to 13.2Hz and max. acceleration $7m/s^2$, 13.2Hz to 100Hz).

G. Protection - The VFD shall be provided with the following protection:

1. Inrush current limit.
2. Ground fault.
3. Overtemperature, heatsink thermal switch protects against excessive ambient or loss of cooling.
4. DC bus protection.
5. Undervoltage.
6. Overfrequency.
7. Input and output phase loss.
8. Speed compensated electronic motor overload current.

H. Digital programmer/controller –The VFD shall be provided with a door mounted alpha-numeric human interface module (HIM) digital display with keypad to view and adjust the following diagnostic and status indicators:

1. VFD Speed % or Frequency
2. Instantaneous overcurrent.
3. Ground fault.
4. Overtemperature.
5. Overvoltage.
6. Undervoltage.
7. Overload.
8. Overfrequency.
9. Amps.

10. Voltage.
11. Temperature.
12. Auxiliary Fault.
13. Phase loss.
14. Current limit.
15. Power up delay.
16. Drive enabled.
17. Gate driver board functioning.
18. DC link bus charged (indicated with a neon lamp).

I. Adjustments - The following setting ranges shall be provided and made independently accessible for operator adjustment:

1. Minimum speed, 4 to 40 Hz.
2. Maximum speed, 40 to 120 Hz.
3. Acceleration time, 1 to 120 seconds.
4. Deceleration time, 1 to 120 seconds.
5. Current limit, 60 to 120% of rated output current.
6. Voltage boost, up to 60 volts at 4 Hz.
7. Overload trip, 0 to 100% of rated output current.

J. Input and Output Terminations - The VFD assembly shall have terminals for input and output cabling as defined in the Conduit and Wire Schedule as shown on the Contract Electrical Drawings.

1. Provide power terminal blocks for motor lead connections where drive terminals are hard to reach or require drive cabinet disassembly to connect.

K. Laptop programming connectivity shall be provided to access the drives internal parameters. Provide a USB or RS232 serial converter device and cable for connection to the laptop. Provide programming software as necessary to allow upload/download of data parameters and view current drive status. Provide Allen Bradley Drive Tools software and 1203 USB converter, or approved equal to match drive being submitted.

L. Features - The VFD assembly shall have the following features:

1. Connection of the three incoming line leads and three-motor leads shall be the only connections necessary for manual operation of the VFD unit. All other wiring shall be prewired at the factory and self-contained within the VFD unit. A 120 VAC control power transformer and other auxiliary power supplies shall be provided with the VFD assembly for power to pilot lights, meters, relays, and miscellaneous devices specified to be supplied with the VFD. Lugs shall be provided for connection of all power leads; terminal blocks shall be provided for all other wiring. Relay logic,

wiring and enclosure layout shall be equivalent to that shown on the Contract "E"-Series Drawings.

2. The VFD shall be protected by a circuit breaker disconnect. The disconnect shall be externally operated and shall have an operator mechanism that is an integral part of the enclosure. An operator mechanism shall be provided to allow padlocking the disconnect in the "off" position with up to two padlocks.

3. AC input fuses shall be provided on the line and/or load side of the VFD (if required by the manufacturer) to isolate the VFD power circuitry upon a fault condition.

4. Transient and surge voltage power line input protection shall be provided for the VFD through use of metal oxide varistors (MOVs), surge protective module, or other approved equal methods. Transient protection integral to the VFD shall be provided to a minimum of 10,000 volts, 50 joules without failure. The transient protection shall meet or exceed ANSI C7, 90-1971 and IEEE 472-1974 Standards without failure. Failure is defined as loss of components in the VFD including power semiconductors and fuses. The VFD shall be protected from the following, as a minimum, power line transients and recover to automatically restart and resume normal operation without posting a fault:

   a. Switching the primary of a power transformer.
   b. Switching power factor correction capacitors “ON” and “OFF” line.
   c. De-energization or energization of contactors, relays, and other power equipment from the power line.
   d. Starting and stopping of other motors when powered from Utility.

5. The VFD shall not be affected by or generate excessive electro-magnetic interference (EMI). The VFD shall be provided with a radio interference filter (RIF) to meet the following requirements:

   a. The use of a 4 Watt hand-held VHF/UHF transceiver within three feet of the VFD with its doors closed shall not cause erratic operation, loss of configuration, or any other deviation from normal operation.

   b. The worst case conducted and radiated EMI generated by the VFD shall not be enough to prevent the use of hand held VHF-UHF transceivers within three feet of the VFD with its doors closed.

6. The VFD system manufacturer shall provide, as a minimum, input line series reactors to prevent the VFD from interacting with the incoming

Utility power line or the generator. Harmonics generated by the VFD shall not affect any device on the existing power distribution system; harmonics from any device on the existing power distribution system shall not affect the operation of the VFD.

7. Opening of the VFDs input switches, or breakers while the VFD is operating under load shall not result in damage to the VFD power or control circuit components.

8. The VFD shall be capable of starting and operating without a motor load connected.

9. Phase loss protection shall be provided to prevent single phasing of the motor load.

10. The VFD shall have an instantaneous electronic trip circuit to protect the VFD from output line-to-line and line-to-ground short circuits. Output line-to-line and line-to-ground short circuits shall not damage the VFD.

11. The VFD shall be capable of providing 110% motor FLA current intermittently for durations of 1 minute.

12. The VFD shall have stall prevention circuitry which utilizes current fold-back in the following sequence:

    a. In an operation mode, whenever the output current exceeds its rated VFD current, the VFD controls shall stop increasing the output frequency and shall decrease it according to the set deceleration ramp until the output current is reduced below its rated current. The inverter then resumes normal operation and the output frequency increases to the set frequency.

    b. The VFD shall constantly monitor the load current with an electronic thermal overload relay and trip the drive on motor overload. The electronic overload relay shall be adjustable and compensate for the reduced cooling of the motor at reduced speeds. This protection provides an orderly shutdown should the motor's thermal capabilities be exceeded and eliminates the requirement for conventional motor overload relays.

13. The VFD shall be protected from excessive regeneration by a full function regeneration limit circuit which avoids nuisance tripping when overhauling loads occur. The full function regeneration limit circuit reduces the negative current limit of the drive during periods of excessive regeneration allowing the drive to remain fully operational without exceeding the level of regenerated energy which can be safely accepted

and dissipated by the inverter. The following performance characteristics shall be provided:

a. The regeneration circuit automatically adjusts the negative current limit, allowing the load to decelerate at the fastest rate possible without excessive regenerated energy. Deceleration torque is automatically limited to its maximum safe level.

b. If the load tends to overhaul the drive motor, the negative current limit is automatically adjusted to prevent excessive regeneration. The inverter hold back torque decreases and allows the motor to follow the load while maintaining hold back torque at its maximum safe level.

14. Automatic fault reset to automatically restart the drive after any type of fault condition. This automatic restart shall repeat up to three attempts. This automatic reset shall be provided to prevent a drive fault from completely locking out on isolated nuisance fluctuations. When the drive is locked out after its automatic reset attempts the operator shall be able to reset the VFD by a local or remote manual reset pushbutton. Fault lockout shall be indicated on the door mounted drive fail pilot light.

15. The VFD shall be capable of continued operation during an intermittent loss of incoming line power up to five cycles.

16. The VFD shall automatically restart upon reapplication of power after a loss of line power. Momentary or sustained power failures shall not fault trip out the VFD or blow any fuses.

17. Any configuration of adjustments or controls not set by a switch or potentiometer shall be stored in nonvolatile memory. No configuration information shall be lost due to power failures of any duration.

18. The VFD shall be capable of starting into a rotating motor without tripping out on a fault.

19. The drive shall have an adjustable voltage boost control capable of providing additional starting torque to the motor at start. This control shall provide the additional voltage only at the frequency range required to start the motor thus reducing the additional motor heating excess voltage would cause at normal operating speeds.

20. The drive shall be equipped with critical frequency jump circuitry which allows the VFD to be setup to skip two bands of frequencies which cause excessive vibration or noise.

21. Digital Programmer/Controller (HIM) shall be provided and remote door mounted. Cable for remote digital programmer/controller shall be supplied. The remote controller shall be mounted and housed to maintain the NEMA 12 door rating.

22. The VFD shall be equipped with a variable speed contactor, full speed bypass contactor and overload heater where full speed bypass is shown on Contract Drawings.

23. Provide line/load reactors/filters where shown on one-line diagrams.

M. Enclosure - The enclosure shall be as shown in the drawings - freestanding, motor control center section or MCC cubicle mount construction. All components shall be accessible from the front of the enclosure. Rear or side access shall not be required in order to remove or service any component. The enclosure shall include the following in its construction:

1. The VFD shall incorporate thermostat/run controlled fans for cooling. The air flow through the VFD compartment shall provide proper cooling of the operating VFD at an ambient temperature of 104°F. Fan mounting shall include reusable air filters on suction. Provide fans for suction and discharge vents as required maintaining air flow and forcing circulation.

2. Provide specific use fans located within the enclosure to cool, directly, specific components such as line filters or DV/DT filters.

3. Thermostat shall have bi-metallic adjustable set point range of 30° to 140°F. Thermostat shall have a switching capacity of 10A at 120 VAC. Provide Hoffman A-TEMNO temperature switch or approved equal to operate fans. Thermostat shall operate fans in parallel with motor running output of VFD.

4. The complete VFD unit, including the enclosure assembly, shall be UL listed for a minimum of 42,000 RMS symmetrical ampere fault withstand capability. VFD assemblies consisting of the VFD, enclosure and all accessories that are not UL listed will not be approved.

2.04 HARMONIC LINE REACTOR

A. Provide three phase AC reactor intended for use as an input or output filter for AC-PWM variable frequency drives. Line reactor shall be current rated to maximum continuous VFD drive amp rating or as shown in the Contract Drawings. The impedance of the reactor shall be 5% or as shown otherwise in the Contract Drawings.

B. The line reactor shall be TCI KLR series, MTE, or approved equal.

2.05 dV/dT Output Filter

A. Provide output load filter that is designed for use with AC adjustable frequency drives. The filter shall be rated for application at a maximum fundamental system frequency of 60Hz at nominal system voltages up to 600V. The filter shall operate at a maximum carrier frequency of 8kHz at 40% of fundamental voltage. The ambient temperature of operation shall be 0°C to 40°C. Output filter application shall be effective for motor lead distances between the drive and the motor that range from 50 feet to 3,000 feet.

B. The three phase filter shall be designed for harmonic filtering service and for slowing the rate of rapid current and voltage changes. The RLC dampened, low pass filter consists of three phase, iron core inductor; AC-rated polypropylene capacitors; and wire-wound resistors. Filter shall be sized to VFD maximum amperage or as shown in the drawings. The design maximum temperature rise for output filter shall be 115°C at rated current. Inductance shall remain above 50% of nominal for any overload up to 200% of rated current. Filter shall not sustain any thermal damage for levels up to 150% of rated current for a minimum period of five minutes.

C. A NEMA rated enclosure shall be provided if the device is shown remote to the VFD panel or if insufficient space is allocated within the VFD panel/section. Enclosure shall be constructed from 14 gauge steel with enamel finish. Enclosure openings shall be provided to allow for air flow convection cooling.

D. The output filter shall be coordinated and compatible with the VFD being submitted. The output filter shall not cause operational problems for the VFD, motor, cables, or other components within the VFD or adjacent systems.

E. The output filter shall be Trans-coil, Inc. “KLC” series, MTE Corporation “RL” series or approved equal.

2.06 SINGLE TURN POTENTIOMETER

A. Provide manual single turn potentiometer. Potentiometer shall be compatible with the VFD input for manual speed control. Potentiometers shall be Allen-Bradley 800H, Cutler Hammer or approved equal.

PART 3: EXECUTION

3.01 WORKMANSHIP

A. All work in this Section shall conform to the codes and standards specified in Section 16010 - Electrical.

B. Requirements of Related Electrical Sections apply to design, documentation construction and assembly of Variable Frequency Drives.

C. Perform work to remedy non-compliant installations after inspection.

3.02 FIELD ASSISTANCE

A. Testing, checkout and start-up of the variable frequency drive equipment shall be performed under the technical direction of a factory trained authorized manufacturer representative.

1. The setup and programming of the VFD shall be provided by a factory-trained representative who is authorized by the VFD manufacturer to perform the startup. This setup and programming shall be done prior to and during the first application of power to the motor. The VFD electronic motor overload protection shall be set to meet the motor nameplate and NEC Code requirements.

2. Provide testing as specified in Section 16600 – Factory and Field Testing.

B. Provide 1 hour of "VFD Setup" Training on operating and maintenance procedures.

3.03 WARRANTY

A. Provide warranty as specified in Electrical Section 16010 – Warranty.

-END OF SECTION-

SECTION 16482 - SOLID STATE SOFT STARTER

PART 1: GENERAL

1.01 SCOPE OF WORK

A. Provide each Solid State Starter (SSS) drive as shown on elementary and one-line drawings. All SSSs shall be of the same manufacturer.

B. Provide enclosure (and wire chase as required) for top or bottom feed conduit connection as shown in the drawings. Enclosure size shall not exceed the space allocated in the drawings for such use.

C. Provide cooling/ventilation system, mounting hardware, associated components, devices, and field control stations. Some components may be specified in other division 16 sections such as terminal blocks, wire, buttons, etc.

D. The SSS scope of work includes:

1. Providing and installing SSS(s) of rating shown on Contract Drawings.
2. Submittal data and drawings.
3. Startup assistance.
4. Factory and field testing.
5. Operation and maintenance manuals.
6. Warranty of all components.

E. Startup and configuration of SSS with actual motor load.

F. Factory and field testing per Section 16600. Furnish all required labor, materials, safety equipment, transportation, test equipment, incidentals and services to perform factory and/or field testing

1.02 RELATED SECTIONS

A. Section 16010 – Electrical
B. Section 16120 – Wire, Fuses and Terminal Blocks
C. Section 16600 – Factory and Field Testing

1.03 JOB CONDITIONS

A. Equipment shall perform in location as shown in the drawings and as described in the job conditions listed in Section 16010 – Electrical.

1.04 SUBMITTALS REQUIREMENTS

A. Provide Submittals as specified in Section 16010.

B. Include a record of each SSS parameter available to be changed by the user. The list shall include factory defaults and space for entered values.

1.05 OPERATING AND MAINTENANCE INFORMATION

A. Provide operation and maintenance instructions as specified in Section 16010.

B. Include a record of each SSS parameter setup during startup and testing and place a copy of setting in each O & M manual.

PART 2: MATERIALS

2.01 QUALITY

A. It is the intent of the Contract Specifications and Drawings to secure the highest quality in all materials and equipment in order to facilitate operation and maintenance of the facility. All equipment and materials shall be new and the products of reputable suppliers having adequate experience in the manufacture of these particular items. For uniformity, only one manufacturer will be accepted for each type of product.

B. All equipment shall be designed for the service intended and shall be of rugged construction, of ample strength for all stresses which may occur during fabrication, transportation, erection, and continuous or intermittent operation. All equipment shall be adequately stayed and braced and anchored and shall be installed in a neat and workmanlike manner. Appearance and safety, as well as utility, shall be given consideration in the design of details. All components and devices installed shall be standard items of industrial grade, unless otherwise noted, and shall be of sturdy and durable construction suitable for long, trouble-free service. Light duty, fragile, and competitive grade devices of questionable durability shall not be used.

C. Products that are specified by manufacturer, trade name, or catalog number establish a standard of quality and do not prohibit the use of equal products of other manufacturers provided they are favorably reviewed by the Owner and/or Engineer prior to installation.

D. Underwriter's Laboratories (UL) listing is required for all substituted equipment when such a listing is available for the first named equipment.

2.02 SOLID STATE SOFT STARTER

A. General:

1. Each solid state soft starter (SSS) shall be provided as a standalone system as an integral unit. The SSS shall be of the latest technology used exclusively for starting motors of the voltage and horsepower shown in the

drawings by limiting the voltage and/or current provided to the motor. The SSS shall be available from a single manufacturer in the horsepower range of 1 to 500. The SSS shall be microprocessor controlled and use high efficiency gated power Silicon Controlled Rectifiers (SCRs). The SSS shall be an Allen-Bradley SMC Dialog Plus with pump control option, no equal.

2. The SSS shall feature the following selectable motor starting/stopping modes:

   a. Internal bypass contactor - The SSS shall have an internal running load rated full voltage contactor. The contactor shall automatically engage when the SSS has completed the ramp start of the motor. The bypass contactor shall automatically disengage at the beginning of the ramp stop of the motor. The voltage across the bypass contactor while engaged shall be less than 0.1 volts.

   b. Soft Start – The motor shall be raised to an initial torque value that is programmable from 0-90% of locked rotor torque. The motor voltage is gradually increased during the acceleration ramp time, which is adjustable from 0-30 seconds.

   c. Soft Start with Selectable Kickstart – The kickstart, or voltage boost, is in addition to the normal soft start as described above. The soft starter shall provide a 0-2 second (selectable) current pulse equal to 550% of the motors full load current.

   d. Current Limit Start – This starting mode will limit the maximum starting current supplied to the motor during starting. The user shall be able to adjust the current limit from 50% to 600% of full load current.

   e. Full voltage Start- This mode will provide full voltage and current to the motor with a 1/4 second ramp.

   f. Soft Stop – This feature will linearly ramp down the voltage over a time interval of 0-60 seconds (selectable)

   g. Pump Control – This optional mode (required as specified herein) provides non-linear voltage ramp starting and stopping to smoothly accelerate and decelerate the motor. The starting time shall be programmable from 0-30 seconds and the stopping time programmable from 0-120 seconds.

B. Load - The SSS shall be designed to continuously operate the following motor/pump load:

1. Motor, squirrel-cage induction.
2. Pump, per Mechanical Division Specification.
3. Horsepower, at Full speed R.P.M. of supplied motor.
4. Voltage, 460 VAC, three phase, 60 cycle.
5. Service factor, 1.15 S.F.

C. Input Power - The SSS shall be rated to continuously operate under the following input power conditions:

1. Voltage, VAC as shown in Contract one-line diagram, +10%, -10%.
2. Frequency, 60 Hz.
3. Three phase.

D. Output Power - The SSS shall be rated to continuously operate while providing the following output power conditions:

1. Voltage, 0 to 460 VAC.
2. Frequency, 60 Hz.
3. SSS amp size (minimum) as shown on Contract one-line drawing.
4. Continuous motor horsepower.
5. Continuous current, 125% of rated motor nameplate Amps.

E. Environmental - The SSS shall be rated to continuously operate under the following environmental conditions:

1. Ambient temperature, 32°F to 122°F (0°C to 50°C).
2. Altitude, no derating below 3,300 ft.
3. Relative humidity, 95% non-condensing.

F. Digital programmer/controller –The SSS shall be provided with a door mounted alpha-numeric human interface module (HIM) digital display with keypad to view and adjust the following diagnostic and status registers:

1. Volts AC per phase.
2. Current per phase.
3. Watts.
4. KWH.
5. Power Factor.

G. Adjustments - The following setting ranges shall be provided and made independently accessible for operator adjustment:

1. Overvoltage level/delay.
2. Undervoltage level/delay.
3. Current unbalance level/delay.
4. Underload level/delay

5. Phase reversal
6. Jam level/delay.
7. Starts per hour.
8. Backspin delay.
9. Ramp times (start and stop).
10. Motor code letter
11. Overload class
12. Motor FLA
13. Motor Service Factor.

H. Input and Output Terminations - The SSS assembly shall have terminals for input and output cabling as defined in the Conduit and Wire Schedule as shown on the Contract Electrical Drawings.

I. Features - The SSS assembly shall have the following features:

1. Bypass Contactor Control - The SSS shall be capable of controlling a bypass motor contactor to allow motor current to flow around the soft starter, through the contactor, and to the motor. Once the motor is up to speed, the contactor shall be closed and held until a fault or stop command. In this mode, no current will flow through the soft starter power terminals but shall remain in the “on” state. An external current sensing module shall monitor the motor current to maintain the diagnostic, fault and control functions. Upon shutdown, the bypass contactor shall open and allow the soft starter to ramp down the motor. Provide sensing module as required per one-line or elementary diagram.

2. Phase rebalance – If enabled, the soft starter shall monitor the incoming three-phase line voltage and automatically adjust the output voltage to balance the three phase currents drawn by the motor.

3. Connection of the three incoming line leads and three-motor leads shall be the only connections necessary for manual operation of the SSS unit. All other wiring shall be prewired at the factory and self-contained within the SSS unit. A 120 VAC control power transformer and other auxiliary power supplies shall be provided with the SSS assembly for power to pilot lights, meters, relays, and miscellaneous devices specified to be supplied with the SSS. Lugs shall be provided for connection of all power leads; terminal blocks shall be provided for all other wiring.

4. The SSS shall be protected by a circuit breaker disconnect. The disconnect shall be externally operated and shall have an operator mechanism that is an integral part of the enclosure. An operator mechanism shall be provided to allow padlocking the disconnect in the "off" position with up to two padlocks.

5. AC input fuses shall be provided on the line and/or load side of the SSS (if required by the manufacturer) to isolate the SSS power circuitry upon a fault condition.

6. Transient and surge voltage power line input protection shall be provided for the SSS through use of metal oxide varistors (MOVs), surge protective module, or other approved equal methods. Transient protection integral to the SSS shall be provided to a minimum of 1,600 volts, 220 joules without failure. The transient protection shall meet or exceed ANSI C7, 90-1971 and IEEE 472-1974 Standards without failure. Failure is defined as loss of components in the SSS including power SCRs and fuses. The SSS shall be protected from the following, as a minimum, power line transients and recover to automatically restart and resume normal operation without posting a fault:

   a. Switching the primary of a power transformer.
   b. Switching power factor correction capacitors "ON" and "OFF" line.
   c. De-energization or energization of contactors, relays, and other power equipment from the power line.
   d. Starting and stopping of other motors when powered from Utility.

7. Opening of the SSS's input switches, or breakers while the SSS is operating under load shall not result in damage to the SSS power or control circuit components.

8. The SSS shall be capable of starting and operating without a motor load connected.

9. Phase loss, reversal, undervoltage, overvoltage, and unbalance motor protection shall be provided built in to the SSS.

10. External motor overload protection shall be required per drawings. External overload shall use bimetallic heating strips and provide +/-15% adjustment for full load amperage. Provide Cutler Hammer Freedom or approved equal.

11. Any configuration of adjustments or controls not set by a switch or potentiometer shall be stored in nonvolatile memory. No configuration information shall be lost due to power failures of any duration.

12. The SSS shall be capable of starting into a rotating motor without tripping out on a fault.

13. Digital Programmer/Controller (HIM) shall be provided and remote door mounted. Remote serial interface shall be suitable for communication via

Allen-Bradley standard protocol. Cable for remote digital programmer/controller shall be supplied. The remote controller shall be mounted and housed to maintain the NEMA 12 door rating.

14. Laptop programming connectivity shall be provided to access the drives internal parameters. Provide a USB or RS232 serial converter device and cable for connection to the laptop. Provide programming software as necessary to allow upload/download of data parameters and view current drive status. Provide Allen Bradley Drive Tools software and 1203 USB converter, or approved equal to match drive being submitted.

J. Enclosure - The enclosure shall be free standing, motor control center style. All components shall be accessible from the front of the enclosure. Rear or side access shall not be required in order to remove or service any component. The enclosure shall include the following in its construction:

1. The SSS shall incorporate fans for cooling. The air flow through the SSS compartment shall provide proper cooling of the operating SSS at an ambient temperature of 104° F. The thermostat shall be monitor and regulate air temperature in the SSS enclosure. Thermostat shall have bi-metallic adjustable set point range of 30 to 140° F. Thermostat shall have a switching capacity of 10A at 120 VAC. Provide Hoffman A-TEMNO temperature switch or approved equal to operate fans.

2. The complete SSS unit, including the enclosure assembly, shall be UL listed for a minimum of 42,000 RMS symmetrical ampere fault withstand capability or as otherwise shown on the drawings. SSS assemblies consisting of the SSS, enclosure and all accessories that are not UL listed will not be approved.

PART 3: EXECUTION

3.01 WORKMANSHIP

A. All work in this Section shall conform to the codes and standards specified in Section 16010 - Electrical.

B. Requirements of Related Electrical Sections apply to design, documentation construction and assembly of Solid State Soft Starters.

C. Perform work to remedy non-compliant installations after inspection.

3.02 FIELD ASSISTANCE

A. Testing, checkout and start-up of the solid state starter equipment shall be performed under the technical direction of a factory trained authorized representative.

1. The setup and programming of the SSS shall be provided by a factory-trained representative who is authorized by the SSS manufacturer to perform the startup. This setup and programming shall be done prior to and during the first application of power to the motor. The SSS electronic motor overload protection shall be set to meet the motor nameplate and NEC Code requirements.

2. Provide testing as specified in Section 16600, Factory and Field Testing.

B. Provide 1 hour of "SSS Setup" Training on operating and maintenance procedures.

3.03 WARRANTY

A. Provide warranty as specified in Electrical Section 16010 – WARRANTY.

END OF SECTION

SECTION 16600 - FACTORY AND FIELD TESTING

PART 1: GENERAL

1.01 SCOPE OF WORK

A. This division defines factory and field testing requirements of electrical and instrumentation equipment and as specified in this section and in each section of division 16. All equipment provided under division 16 and electrical equipment provided under other sections shall be tested as specified herein.

B. The Electrical Contractor shall coordinate and pay for the services of an approved qualified third party independent testing company for the purpose of performing specific tests as outlined in EXECUTION, Field Test of this section.

C. The System Integrator, Testing Company and/or Electrical Contractor shall provide all labor, tools, material, power, and technical supervision to perform the specified tests and inspections.

D. The Electrical Contractor shall be present during field testing and assist the System Integrator and/or Testing Company in testing all equipment. The Electrical Contractor shall be ready to correct any wiring problems found during testing.

E. The Owner Representative or Engineer will be actively engaged in Operational Testing and Commissioning. These efforts shall be combined efforts of the Owner/Engineer and Contractor. The Contractor shall facilitate test as outlined herein such that hardware and software are tested completely and all applicable test documentation is completed.

F. It is the intent of these tests to ensure that all equipment is operational within industry and manufacturer's tolerances and is assembled in accordance with design plans and Specifications.

G. All tests shall be documented in writing by the person performing the test on the test forms submitted (and similar to those shown at the end of this section) and signed by the Engineer as satisfactorily completed. The Testing Company, Electrical Contractor or System Integrator performing tests shall keep a detailed log of all tests that failed or did not meet Specifications, including date of occurrence and correction.

H. The radio and communications equipment shall be completely configured by the Contractor for permanent operation. Radio diagnostics, addresses, and configuration shall be recorded and provided with testing submittals. Provide data in tabular format on Excel spreadsheet. Contractor is required to test every

path, link, repeater until optimum results are obtained. Test form example is not provided for this purpose and must be generated by the Contractor.

1.02 RELATED WORK IN OTHER SECTIONS

A. Additional testing may be specified in other Division 16 sections.

1.03 FACTORY AND FIELD GENERAL REQUIREMENTS

A. Testing General

1. Prior to any field testing Operation & Maintenance Manuals shall have been submitted by the Contractor and approved by the Engineer.

2. The test forms shall be completed by the contractor during testing and calibration of all equipment. All tests shall be witnessed by the Engineer. Completed test forms shall be given to the Engineer the day of the test. Complete two sets of test forms if Contractor wants to keep a copy.

3. The Contractor shall give the Engineer 10 working days notice of the dates and time for inspections and testing using the "Scheduled Test Date Request Form."

4. Include test results in the Maintenance and Operational Manual.

5. As a minimum, all the tests indicated/specified on the test forms shall be performed and test forms filled out by the Contractor.

6. Prepare and submit formal test procedures and forms to the Owner at least two weeks prior to the start of testing. Testing shall not commence until the test procedures have been reviewed and approved by the Engineer. Submit a combined test procedure submittal with separate sections for factory and field tests.

7. If the results of any of tests are unacceptable to the Engineer, the Contractor shall make corrections and perform the tests again until they are acceptable to the Engineer; these tests shall be done at no additional cost to the Owner.

B. Failure to Meet Test

1. Any system, material or workmanship which is found defective on the basis of these tests shall be reported to the Engineer immediately following the test. The Contractor shall replace the defective material or equipment and have tests repeated until test proves acceptable to the Engineer without additional cost to the Owner.

C. Safety

1. Testing shall conform to the respective manufacturer's recommendations. All manufacturers' safety precautions shall be followed.

2. The procedures stated herein are guidelines for the intended tests, the Contractor shall be responsible to modify these tests to fit the particular application and ensure personnel safety. Absolutely no tests shall be performed in such a fashion that personnel safety is jeopardized.

3. The Contractor shall have two or more personnel present at all tests.

4. Two non-licensed portable radios shall be provided by the Contractor for use during testing.

5. Contractor shall comply with California Electrical Safety Orders (ESO) and Occupational Safety and Health Act (OSHA): All test and procedures shall comply with ESO and OSHA as to safety, protective clothing, clearances, padlocks and barriers around electrical equipment energized during testing.

6. The first set of tests to be performed (**pre-energization**) shall determine the suitability for energization and shall be completed with all power turned off.

1.04 QUALIFICATIONS

A. Testing Company

1. Testing company shall have been actively engaged in the type of electrical testing specified in this Division for the past three years (minimum). The Testing Company representative shall have two years experience in field testing of equipment working for the Testing Company or equivalent. The following Electrical Testing Companies are pre-approved.

   a. EETS (916) 339-9691
   b. Industrial Test (916) 859-5959
   c. Electrical Reliability Services (916) 920-5014
   d. Apparatus Testing and Engineering (916) 853-6280
   e. Power Systems Testing (916) 969 9177

2. Testing Companies not listed are required to submit company and individual representative resumes for review and approval by the Engineer.

B. System Integrator Representative

1. The system integrator representative shall have 1 year experience in field testing of equipment working for the System Integrator or equivalent. If the Engineer deems that the representative does not demonstrate necessary experience or competence during testing or start-up, the System Integrator shall provide a representative meeting the required competence and experience.

C. Electrical Contractor Representative

1. The Electrician shall have 5 years minimum experience working with industrial control systems and have a Journeyman level experience rating.

1.05 SUBMITTAL REQUIREMENTS

A. The Contractor shall ensure that the Testing Company, System Integrator, and all equipment suppliers provide the submittal documentation required in this section. Submittals shall be complete, neat, orderly, and indexed. The Contractor shall check all submittals required under this Division for the correct number of copies, adequate identification, correctness, and compliance with the Contract Specifications and Drawings, and initial all copies certifying compliance.

B. The System Integrator shall submit for approval complete testing procedures and forms at least two weeks prior to the start of testing. Contractor is responsible for compiling testing procedures and forms from multiple sub-contractors as required.

C. Test submittal shall include: (as applicable)

1. Proposed procedure for operational testing whether it is performed in the factory or field. Procedure shall include method, simulated I/O requirements, bypass piping, telemetry, and necessary materials and equipment to conduct test.

2. Test forms (for all tests, factory and field, and regardless of who performs tests). Test forms shall be electronically completed prior to submittal with entry spaces filled to the extent possible. The only remaining data that shall require completion during the test is the test data itself. Test forms shall be provided as illustrated at the end of this section or equal.

3. Approved shop one-line, elementary diagrams and PLC I/O drawings.

4. Control strategies photocopied at 75% reduction with room at the side of page for comments on each paragraph or control strategy.

PART 2: PRODUCTS

2.01 TEST EQUIPMENT

A. Test equipment required to perform testing and document results shall be provided by Contractor, Testing Company or System Integrator.

B. Test instruments shall be calibrated to references traceable to the National Institute of Standards and Technology. Instrument calibration shall be current to one year from date of start-up. Test equipment accuracy shall be at least twice the accuracy of instrument being calibrated. Test instrument certificates of calibration shall be on-hand and provided prior to testing.

C. All test equipment to be used as part of the testing shall be listed in the submitted testing sheets. Contractor supplying the component or system to be tested shall provide all necessary test equipment.

D. The overall accuracy of each input and output loop shall be checked to ensure that it is within manufacturer's Specification tolerances. In no case shall the error exceed 0.25% or 0.04 mA.

PART 3: EXECUTION

3.01 FACTORY TESTING

A. General Requirements

1. The System Integrator shall conduct a thorough and complete factory test witnessed by Engineer per the criteria specified herein. Factory test shall be held within 150 miles of project location.

2. Temporary wiring and equipment shall be provided and connected during these tests to simulate the complete assembled system.

3. The testing shall not be started until the manufacturer has completed fabrication, wiring, setup, programming; quality control testing; and can demonstrate the system is complete and operational.

4. The equipment required for factory testing shall consist of, but is not limited to, control panels, MCCs, and/or miscellaneous electrical panels as provided under this contract.

5. Two digital multimeters/signal generators (minimum +/- 0.1% accuracy) with clip-on leads shall be supplied and utilized during testing for measurement of digital and analog outputs.

6. All factory tests shall be conducted at the System Integrator’s facility. All factory tests shall be completed prior to shipment to the jobsite. The equipment shall be fully assembled, and connected (and programmed) similar to as it will be installed.

7. The length of the factory testing shall be a minimum of one (1) working day(s) (8 hours per day).

8. Faulty and/or incorrect hardware or software operation of major portions of the system may, at the discretion of the Engineer, be cause for suspension, cancellation, or restarting of the factory test, at no additional cost to the Owner or extension in Contract time.

9. The factory test will be considered complete only when the integrated system has successfully passed all tests. No electrical equipment shall be shipped to jobsite without completed test documentation.

10. During the testing period, under the supervision of the System Integrator, the Owner and/or Engineer shall have unlimited and unrestricted access to the usage and testing of system hardware, configuration, software, meters and tools.

11. The System Integrator shall pay all expenses incurred by his personnel including labor, material, transportation, lodging, daily subsistence, and other associated incidental costs during the factory testing.

12. Acceptance and witnessing of the factory tests does not relieve or exclude the Contractor from conforming to the requirements of the Contract Documents.

13. Upon conclusion of factory testing, and at the request of the Owner/Engineer, the System integrator shall remove the PLC, OI, and communication equipment for Owner representative's use and programming. The System Integrator shall provide equipment to Owner representative immediately or ship unit within 2 working days to Owner Representative. The System Integrator shall not be responsible for equipment while in Owners Representative's care.

14. All modifications to documentation as a result of the factory tests shall be corrected and completed before the submittal and delivery of "Operation and Maintenance" Manuals.

15. Copies of the completed and witnessed factory testing forms shall be included in the Operation and Maintenance Manual.

B. Factory Tests

1. Structured Factory Tests: The associated factory tests are to be performed by the System Integrator and witnessed by the Engineer. The associated test forms shall be completed during each stage of the test.

a. Visual and Mechanical Inspection Tests

b. Wiring Tests

1) Contractor shall confirm correct panel wiring per System Integrator panel shop drawings. Panel shop drawings shall be compared with Contract P&IDs and other drawings to verify all hardwire logic are accounted for. Panel drawings used in factory tests shall be redlined and inserted into Factory Testing Results submittal.

c. MCC and Control Panel Pre-Operational Tests

d. Logic Controller I/O Point to Point Tests

e. Simulated Alarm Tests

1) Simulate the digital and/or analog signals at the terminals to verify that each PLC I/O point is functional and properly programmed. Verify that all parameters (i.e., setpoints, enable/disable toggle bits, timers, etc.) for the alarms operate according to the Specifications. Multiple alarm states (i.e., LO, LO-LO, HI, HI-HI, etc.) shall be checked.

f. Simulated Operational Control Tests

1) Simulate the digital and/or analog signals at the field terminals to verify that each control system is functional and properly configured and programmed.

2) Each line of control logic in the Control Strategies section shall be checked. When the complete control strategy has been checked, it shall be signed and dated by testing person and person witnessing test.

3) Verify that all parameters (i.e., setpoints, runtimers, totalization, etc.) operate according to the Specifications.

2. Unstructured Factory Tests: The various unstructured tests shall include, but are not limited to, the following.

a. Simulate the equipment failure and power fail/restart of PLC. Check the effects of each failure on maintaining operations with the remaining equipment.

b. The factory tests, as a minimum, shall simulate all normal and abnormal operating conditions including steady state, change of state, variable changes, fluctuations, transients, upsets, start-up, shutdown, power failure, and equipment failure conditions.

c. Simulation of PLC communication error. Demonstrate error detection, alarming, and recovery.

d. Measure and test all power supplies for correct voltage. Operate rechargeable devices under battery power to test run duration, alarms and automatic recovery.

3.02 FIELD TESTING

A. General Requirements

1. Field testing is broken down into 4 components

   a. Pre-Energization testing
   b. Pre-Operational Testing
   c. Operational Testing
   d. Commissioning

2. Project wide, all Pre-Energization testing must be completed prior to Pre-Operational testing, all Pre-Operational testing must be completed prior to Operational Testing, and all Operational Testing must be completed prior to Commissioning.

   a. Any deviation of this order, whether on a component level or larger scale, must be approved by the Engineer.

   b. Out of order testing, if allowed, will be evaluated on a case-by-case basis when brought to the attention of the engineer. The engineer may require that the entire system, or portions thereof, be retested once the missing component(s) are installed and functional.

3. All equipment supplied by the Contractor or others shall be tested by Contractor per these specifications.

4. Two digital multimeters/signal generators (minimum +/- 0.1% accuracy) , AC current meters, torque wrench, and other specialized test equipment shall be provided by the Contractor for use during testing.

5. If the equipment is determined by the Engineer to be not ready for testing, the test will be cancelled and rescheduled for a later date.

6. Faulty and/or incorrect hardware or software operation of major portions of the system may, at the discretion of the Engineer, be cause for suspension, cancellation, or restarting of the area of testing, at no additional cost to the Owner or extension in Contract time.

7. During the Operational testing period, under the supervision of the System Integrator, the Owner and/or Engineer shall have unlimited and unrestricted access to the usage and testing of all hardware and software in the system.

8. The System Integrator shall pay all expenses incurred by his personnel including labor, material, transportation, lodging, daily subsistence, and other associated incidental costs during field testing.

9. Acceptance and witnessing of the tests does not relieve or exclude the Contractor from conforming to the requirements of the Contract Documents.

10. All modifications to documentation as a result of the tests shall be corrected and completed before the delivery of "as-built" documentation.

11. Copies of the completed and witnessed field testing forms shall be included in the Operation and Maintenance Manual.

12. The various contractors on this project (General Contractor, Electrical Contractor, Testing Company, and System Integrator) shall assume the lead role in testing activities as listed below. The Contractor shall obtain assistance of suppliers and/or manufacturers representatives for any major equipment testing.

    a. Electrical Contractor:

        1) Pre Energization Tests
            a) Visual Mechanical Tests
            b) Wire Insulation and Continuity Tests.
            c) Panelboard Tests
            d) Breaker Tests

        2) Operational Tests.

        3) Commissioning.

    b. System Integrator:

        1) Pre-Operational Tests
            a) Visual Mechanical Tests
            b) Control panel pre-operational test
            c) MCC pre-operational test
            d) Motor Tests.
            e) PLC I/O point to point tests.
            f) Instrumentation switch tests
            g) Instrumentation transmitter tests.

2) Operational Tests.
3) Commissioning

c. Testing Company

1) Grounding System Tests
2) Breaker Device Tests

d. General Contractor

1) Test Scheduling
2) Operational Tests.
3) Commissioning.

e. Owner Representative (software systems)

1) Operational Tests.
2) Commissioning.

B. Electrical Field Tests – The following test shall be performed within each test category. Complete test forms for each electrical panel, instrument, and/or device.

1. Pre-Energization Inspections and Tests:

a. Visual and Mechanical Inspection Tests
b. Wire Insulation and Continuity Tests
c. Grounding System Tests
d. Panelboard Tests
e. Breaker Tests

2. Pre-Operational Tests:

a. MCC Pre-operational Tests:
b. Control Panel Pre-operational Tests:
c. Motor Testing:
d. Harmonic Measurement: (Required for systems with VFDs)
e. Instrumentation Switch Calibration Tests
f. Instrument Transmitter Calibration Tests
g. PLC I/O point tests.
h. Communication Tests

1) The Contractor shall verify that all communications via radio, telephone, wireline, fiber optic, or other are functional and ready for operational testing. Revise all configurable parameters without additional cost to the Owner as required for an optimally functional system.

2) Verify that all components of the communication system operate together under all operating and power restart conditions. If faults occur, investigate source of problem and correct. Revise all configurable parameters without additional cost to the Owner.

3) Change setpoints from SCADA and confirm that corresponding field setpoint changes correctly. Check every I/O point on every screen, trend, and database.

i. Pump Performance Tests

3. Operational Tests:

a. After all the previous tests in this subsection are complete, the Contractor shall conduct operational testing.

b. Representatives from the General Contractor, Electrical Contractor, System Integrator, Engineer and Owner shall be present during testing. Operational testing shall be performed by Contractor in the presence of the Engineer

c. During operational testing the Contractor shall follow the instructions of the Owner. The Owner may place restrictions on operation that must be followed by the Contractor during testing. Any accidents or fines caused by actions of the Contractor where warnings or restrictions were placed, shall be remedied or paid by the Contractor.

d. Alarm Tests

1) Generate the digital and/or analog signals at the primary device to verify that each PLC I/O point is functional and properly programmed. Verify that all parameters (i.e., setpoints, enable/disable toggle bits, timers, etc.) for the alarms operate according to the Specifications. Multiple alarm states (i.e., LO, LO-LO, HI, HI-HI, etc.) shall be checked.

e. Operational Control Tests

1) Generate the digital and/or analog signals at the primary device by raising or lowering the actual measured process. Inject signal into the terminals or utilize a “force” function within the device only as necessary. Verify that each control system is functional and properly configured and

programmed.

2) Each line of control logic in the Control Strategies section shall be checked. When the complete control strategy has been checked, it shall be signed and dated by testing person and person witnessing test.

3) Verify that all parameters (i.e., setpoints, runtimers, totalization, etc.) operate according to the Specifications.

4) Verify that all data, setpoints, alarms are being received at SCADA correctly and that all I/O points on screen are true and accurate representations of field information.

f. Other Tests

1) Force a power failure and power fail/restart of PLC and all other systems. Check the effects of each failure on each piece of equipment and automatic recovery.

2) Force a PLC communication error. Demonstrate error detection, alarming, and recovery.

3) Perform additional operational testing as determined by Engineer that has not already been witnessed.

4) Perform any additional operational testing as necessary to confirm robust and error free operation under all operational conditions.

4. Trial Period

a. Station/Equipment shall be activated to automatically run for 5 days, 24 hours per day Monday through Friday.

b. During the five day period the Owner/Engineer will test all modes of operation and will look for errors and malfunctions. A punchlist will be generated to be completed by Contractor and re-tested prior to Commissioning.

c. If equipment failure occurs during the 5 days of operational testing, the Contractor shall repair or replace the defective equipment and shall begin another 5 day operational test, Monday through Friday.

d. This test shall be repeated until all new equipment functions acceptably and without failure for 5 consecutive days.

C. Commissioning:

1. Commissioning shall not commence until Operational testing and System Training are complete with documentation submitted and with prior approval of Engineer.

2. The Owner may delay Commissioning for a period up to 30 days, during which time all testing documentation will be reviewed and preparation for operation will be made. Costs for project delays during this review may not be forwarded on to the Owner.

3. Commissioning period

a. The new equipment shall be activated by the Contractor to operate in full automatic for 10 consecutive days, 24 hours per day. Commissioning shall only start on Mondays or Tuesdays.

b. During Commissioning, the Owner will monitor and run the station in normal automatic mode. If equipment failure occurs during Commissioning, the Contractor shall repair or replace the defective equipment and shall begin another commissioning period after repairs are complete.

c. Parallel, existing and/or back-up systems shall remain in place and functional during commissioning period. Demolition of parallel, existing or back-up systems shall not begin until commissioning is completed.

d. This test shall be repeated until the new equipment functions acceptably for a consecutive commissioning period.

e. Warranty will begin at the start of a successful commissioning period. However, if major hardware failure occurs during commissioning, the warranty and commissioning will restart once the problem has been identified and repaired.

D. Final Acceptance:

1. The commissioning period must be completed with no failures identified.

2. The system shall not be "final" accepted unless the system functions without hardware failures or software problems during the commissioning period to the satisfaction of the Engineer.

3. Include all test results in the Operation and Maintenance Manual as a separate volume.

E. Warranty:

1. The completion of the above tests does not relieve the Contractor from any warranties specified in Division 16 or other sections.

2. Warranty shall begin on the start date of a successful Commissioning period.

SECTION 16600

TEST FORMS

Index of Forms:

PC	Power Conductor Test Form
CC	Control Conductor Test Form
IC	Instrumentation Conductor Test Form
GS	Grounding System Test Form
VM	Electrical Equipment Visual and Mechanical Inspection Form
PB	Panelboard Test Form
MCO	MCC Operational Test Form
CPO	Control Panel Operational Test Form
BD	Breaker Device Test Form
MOTOR	Motor Test Form
IOP	Programmable Logic Controller I/O Point-to-Point Test Form
ISC	Instrumentation Switch Calibration Test Form
ITC	Instrumentation Transmitter Calibration Test Form
PPT	Pump Performance Test Form

-END OF SECTION-

POWER CONDUCTOR TEST FORM

PROJECT NAME: _____ DATE OF TEST: _____

TESTING COMPANY: _____ TEST LOCATION: _____

EQUIPMENT #: _____

INSULATION TESTS						
CONDUIT	PHASE TO GROUND			PHASE TO PHASE		
#	A	B	C	AB	BC	CA

NOTES:

1) Use single form for up to 25 power conduits. Use additional forms as necessary.

2) Disconnect both ends of wiring prior to megger tests.

3) Megger insulation resistances of all 600 volt insulated conductors using a 500 volt megger for 10 seconds (30 seconds for motor leads). Make tests with circuits installed in conduit and isolated from source and load. Each conductor shall be meggered conductor-to-conductor and conductor-to-ground. These tests shall be made on cable after installation with all splices made up and terminations installed but not connected to the equipment.

4) Each megger reading shall not be less than 22 Meg-ohms resistive. Corrective action shall be taken if values are recorded less than 10 Meg-ohms. Conductors with low ohm values, that do not match similar lengths of conductors the same size, shall be replaced at no additional cost to the Owner.

5) Values of different phases of conductors in the same conduit run showing substantially different Meg-ohm values, even if showing above 22 Meg-ohms shall be replaced.

CERTIFIED BY: _____ _____ _____

SIGNATURE COMPANY DATE

WITNESSED BY: _____ _____ _____

SIGNATURE COMPANY DATE

CONTROL CONDUCTOR TEST FORM

PROJECT NAME: _____ DATE OF TEST: _____

TESTING COMPANY: _____ TEST LOCATION: _____

INSULATION TESTS											
COND. # OF #	COND. TO GROUND	CONDUCTOR TO CONDUCTOR									
1		1 TO #	2 TO #	3 TO #	4 TO #	5 TO #	6 TO #	7 TO #	8 TO #	9 TO #	10 TO #
		X									
2		1 TO #	2 TO #	3 TO #	4 TO #	5 TO #	6 TO #	7 TO #	8 TO #	9 TO #	10 TO #
		X	X								
3		1 TO #	2 TO #	3 TO #	4 TO #	5 TO #	6 TO #	7 TO #	8 TO #	9 TO #	10 TO #
		X	X	X							
4		1 TO #	2 TO #	3 TO #	4 TO #	5 TO #	6 TO #	7 TO #	8 TO #	9 TO #	10 TO #
		x	x	x	x						
5		1 TO #	2 TO #	3 TO #	4 TO #	5 TO #	6 TO #	7 TO #	8 TO #	9 TO #	10 TO #
		X	X	X	X	X					
6		1 TO #	2 TO #	3 TO #	4 TO #	5 TO #	6 TO #	7 TO #	8 TO #	9 TO #	10 TO #
		x	x	x	x	x	X				
7		1 TO #	2 TO #	3 TO #	4 TO #	5 TO #	6 TO #	7 TO #	8 TO #	9 TO #	10 TO #
		x	x	x	x	x	x	x			
8		1 TO #	2 TO #	3 TO #	4 TO #	5 TO #	6 TO #	7 TO #	8 TO #	9 TO #	10 TO #
		x	x	x	x	x	x	x	x		
9		1 TO #	2 TO #	3 TO #	4 TO #	5 TO #	6 TO #	7 TO #	8 TO #	9 TO #	10 TO #
		x	x	x	x	x	x	x	x	x	
10		1 TO #	2 TO #	3 TO #	4 TO #	5 TO #	6 TO #	7 TO #	8 TO #	9 TO #	10 TO #
		X	X	X	X	X	X	X	X	X	X

NOTES:

1) Use single form for each conduit.

2) Disconnect both ends of wiring prior to megger tests.

3) Megger insulation resistances of all 600 volt insulated conductors using a 500 volt megger for 10 seconds. Make tests with circuits installed in conduit and isolated from source and load. Each conductor shall be meggered conductor-to-conductor and conductor-to-ground. These tests shall be made on cable after installation with all splices made up and terminations installed but not connected to the equipment.

4) Each megger reading shall not be less than 22 Meg-ohms resistive. Corrective action shall be taken if values are recorded less than 10 Meg-ohms. Conductors with low ohm values, that do not match similar lengths of conductors the same size, shall be replaced at no additional cost to the Owner.

5) Values of different phases of conductors in the same conduit run showing substantially different Meg-ohm values, even if showing above 22 Meg-ohms shall be replaced.

CERTIFIED BY: _____ _____ _____

SIGNATURE COMPANY DATE

WITNESSED BY: _____ _____ _____

SIGNATURE COMPANY DATE

INSTRUMENTATION CONDUCTOR TEST FORM

PROJECT NAME: _____ DATE OF TEST: _____

TESTING COMPANY: _____ TEST LOCATION: _____

CONDUIT NUMBER: _____ EQUIPMENT #: _____

CONTINUITY TESTS			INSULATION TESTS	
CONDUCTOR PAIR # OF #	CONDUCTOR TO CONDUCTOR	CONDUCTOR TO SHIELD	CONDUCTOR TO CONDUCTOR	SHIELD TO GROUND

NOTES:

1) Disconnect both ends of wiring prior to megger tests.

2) Megger insulation resistances of all 600 volt insulated conductors using a 500 volt megger for ten seconds. Make tests with circuits installed in conduit and isolated from source and load. Each conductor shall be meggered conductor-to-conductor and conductor-to-ground. These tests shall be made on cable after installation with all splices made up and terminators installed but not connected to the equipment.

3) Each megger reading shall not be less than 10 Meg-ohms resistive. Corrective action shall be taken if values are recorded less than 10 Meg-ohms. Conductors with low ohm values, that do not match similar lengths of conductors the same size, shall be replaced at no additional cost to the Owner.

4) Continuity Tests: Each instrumentation conductor twisted shielded pair shall have the conductor and shield continuity measured with an ohmmeter. Conductors with high ohm values, that do not match similar lengths of conductors the same size, shall be replaced at no additional cost to the Owner.

CERTIFIED BY: _____ _____ _____

SIGNATURE COMPANY DATE

WITNESSED BY: _____ _____ _____

SIGNATURE COMPANY DATE

GROUNDING SYSTEM TEST FORM

PROJECT NAME: _____ DATE OF TEST: _____

TESTING COMPANY: _____ TEST LOCATION: _____

TECHNICIAN: _____ TEST LOCATION: _____

EQUIPMENT NAME: _____

SOIL CONDITION: circle one WET DRY MOIST DAYS SINCE LAST RAIN # _____ OVER 7 _____

TEST ROD LOCATION RELATIVE TO SYSTEM GROUND UNDER TEST (DISTANCE AND DIRECTION) _____

COMMENTS:

FALL OF POTENTIAL TEST

MEASURED VOLTAGE PROBE		RESIST. OHMS
DIST.	RESIST.	1.00
20		0.90
30		0.80
40		0.70
50		0.60
60		0.50
70		0.40
80		0.30
90		0.20
		0.10
		0.00

GRAPH OF MEASURED RESISTANCE VS. DISTANCE FROM TEST PROBE

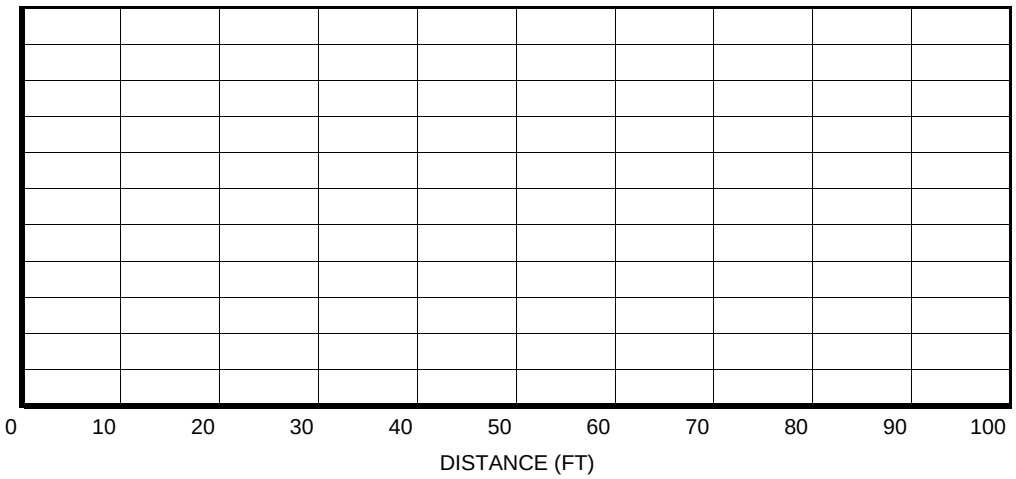

NOTES:

1) Use ground resistance test meter and perform separate ground test for each building or independently derived grounding system.

2) Verify ground system is in compliance with drawings and specifications.

3) Perform the test not less than two days after the most recent rainfall and in the afternoon after any ground condensation (dew) has evaporated.

4) Investigate point-to-point resistance values which exceed 1.0 ohm. Correct (by adding additional grounding systems as necessary) and re-test. Consult design engineer if for direction on additional grounding materials and methods.

5) Connect all ground electrodes and/or UFER ground together and perform fall of potential test.

6) Perform fall-of-potential test in accordance with IEEE Standard 81 and NETA 7.13 on the main grounding electrode or system. Install test electrodes a minimum of 100 feet from system under test.

7) Measurements shall be made at 10 feet intervals beginning 20 feet from the test electrode and ending 80 feet from it in a direct line between the system being tested and the test electrode. Plot resistance readings on graphical chart above.

8) Perform point-to-point tests to verify low resistance between the main grounding system and all electrical equipment connected to the grounding system. Purpose is to check Cad-Weld connections and continuity point to point.

CERTIFIED BY: _____ _____ _____

SIGNATURE COMPANY DATE

WITNESSED BY: _____ _____ _____

SIGNATURE COMPANY DATE

ELECTRICAL EQUIPMENT
VISUAL AND MECHANICAL INSPECTION FORM

PROJECT NAME: _____ DATE OF TEST: _____
TESTING COMPANY: _____ TEST LOCATION: _____
EQUIPMENT NAME: _____ EQUIPMENT #: _____

NAMEPLATE DATA (complete as applicable)

MANUFACTURE: _____ ENCLOSURE: _____
MODEL #: _____ U.L. #: _____
VOLTAGE: _____ PHASE: _____
BUS AMPERAGE: _____ SERVICE: _____
BUS TYPE: _____ BUS BRACING: _____
VERTICAL BUS: _____ HORIZONTAL BUS: _____
GROUND BUS: _____ NEUTRAL BUS: _____
SERIES #:

PHYSICAL INSPECTION CHECKLIST

ENTER A-ACCEPTABLE R-NEEDS REPAIR OR REPLACEMENT NA-NOT APPLICABLE

ITEM	CHECK	NOTES
CHECK NON-ELECTRICAL FASTENERS FOR TIGHTNESS		
TORQUE TEST ALL WIRING AND BUS CONNECTIONS		
VERIFY ANCHORAGE IS PER SPECS AND/OR CALCS		
CHECK BUS BRACING AND CLEARANCE		
CHECK MAIN GROUNDING CONNECTION AND SIZE		
VERIFY GROUND BUS BONDING		
VERIFY EQUIPMENT GROUNDS		
VERIFY CONDUIT GROUNDS AND BUSHINGS		
CHECK NEUTRAL BUS AND CONNECTIONS		
VERIFY ALL BREAKERS AND FUSES ARE RATED PROPERLY		
INSPECT FOR BROKEN OR DAMAGED EQUIPMENT		
INSPECT ALIGNMENT OF PANEL AND DOOR		
VERIFY REMOVAL OF ALL DEBRIS AND DUST		
VERIFY WIRE LABELS ARE INSTALLED		
VERIFY ALL WIRE TERMINATIONS		
CHECK FOR PROPER WIRE SIZES		
CHECK FOR PROPER WIRE COLOR CODES		
VERIFY ALL NAMEPLATES		
CHECK FOR PROPER CLEARANCES AND WORKING SPACE		
INSPECT ALL PAINT SURFACES		
CHECK HEATERS AND THERMOSTATS		
CHECK VENTILATION AND FILTERS		
CHECK IF DRAWINGS MATCH EQUIPMENT		
CHECK ACCURACY OF OPERATION & MAINTENANCE		

NOTES:

1) Complete checklist above. Note any items that were found out of compliance.

2) Torque all electrical connections to values defined by equipment manufacturer or per NEC 110-14.

CERTIFIED BY: _____ _____ _____
SIGNATURE COMPANY DATE

WITNESSED BY: _____ _____ _____
SIGNATURE COMPANY DATE

PANEL BOARD TEST FORM

PROJECT NAME: _____ DATE OF TEST: _____

TESTING COMPANY: _____ TEST LOCATION: _____

PANEL NAME: _____ PANEL TAG #: _____

PANELBOARD NAMEPLATE DATA

UL #: _____ MANUFACTURE: _____

MAIN BREAKER RATING: _____ MODEL #: _____

PHASE: _____ VOLTAGE: _____

VERTICAL BUS RATING: _____ BUS AMPERAGE: _____

NEUTRAL BUS RATING: _____ BUS TYPE: _____

GROUND BUS RATING: _____ ENCLOSURE: _____

ENTRY LOCATION: _____ SERIES: _____

PHYSICAL INSPECTION CHECKLIST

ITEM	CHECK	NOTES
TIGHTEN ALL BOLTS AND SCREWS		
TIGHTEN ALL WIRING AND BUS CONNECTIONS		
VERIFY ALL BREAKERS AND FUSES ARE RATED PROPERLY		
CHECK BUS BRACING AND CLEARANCE		
CHECK MAIN GROUNDING CONNECTION AND SIZE		
VERIFY GROUND BUS BONDING		
VERIFY EQUIPMENT GROUNDS		
VERIFY CONDUIT GROUNDS AND BUSHINGS		
CHECK NEUTRAL BUS AND CONNECTIONS		
INSPECT FOR BROKEN OR DAMAGED EQUIPMENT		
INSPECT ALIGNMENT OF PANEL AND DOOR		
VERIFY ANCHORAGE		
VERIFY REMOVAL OF ALL DEBRIS AND DUST		
VERIFY CIRCUIT BREAKER LEGEND PER CONTRACT		
INSPECT ALL PAINT SURFACES		
VERIFY WIRE LABELS ARE INSTALLED		
VERIFY ALL WIRE TERMINATIONS		
VERIFY PANEL SCHEDULE WITH TERMINATIONS		
VERIFY PROPER WIRE SIZE		

NOTES:

1) Complete checklist above by entering a checkmark for acceptable, R for needs repair or attention

CERTIFIED BY: _____ _____ _____

SIGNATURE COMPANY DATE

WITNESSED BY: _____ _____ _____

SIGNATURE COMPANY DATE

MOTOR CONTROL PRE-OPERATIONAL TEST FORM

PROJECT NAME: _____ DATE OF TEST: _____

TESTING COMPANY: _____ TEST LOCATION: _____

MCC NAME: _____ MCC MANUFACTURE _____

MCC TYPE: _____ MCC LOCATION: _____

EQUIPMENT NAME	EQUIPMENT TAG #	CUBICLE #	LOCAL DEVICE CHECKS AND TESTS						REMOTE DEVICE CHECKS AND TESTS		
			CONTROL SWITCH	TIME RELAY SETTINGS	METERING & INDICATIONS	OVERLOAD RESET	INTERLOCKS & CONTROL	ALARM & STATUS	CONTROL SWITCH	PUSHBUTTON LOCKOUT & STOP	METERING INDICATIONS

NOTES:

1) Verify equipment powers up and operates correctly in hand.

2) Perform trip functions and verify equipment returns to normal operation with only necessary operator intervention.

3) Enter data for each piece of equipment being served from MCC or Control Panel.

4) Enter NA - for non applicable entries.

CERTIFIED BY: _____ _____ _____

SIGNATURE COMPANY DATE

WITNESSED BY: _____ _____ _____

SIGNATURE COMPANY DATE

CONTROL PANEL PRE-OPERATIONAL TEST FORM

PROJECT NAME: _____ DATE OF TEST: _____

TESTING COMPANY: _____ TEST LOCATION: _____

CONTROL PANEL NAME: _____ CONTROL PANEL TAG #: _____

CONTROL PANEL MANUFACTURER: _____ CONTROL PANEL TYPE: _____

CATEGORY	EQUIPMENT TAG #	DEVICE CHECKS AND TEST								
		CONTROL SWITCHES	OPERATOR INTERFACE	PANEL METERS	PANEL LIGHTS	PANEL NAMEPLATES	PLC POWER SUPPLY	I/O CARDS		
Height										
Voltage										
Function										
CATEGORY	EQUIPMENT TAG #	POWER SUPPLY 1 (V)	POWER SUPPLY 2 (V)	POWER SUPPLY 3 (V)	UPS	PANEL LIGHTS				
Function										
Voltage										

NOTES:

1) Set configurable parameters and verify voltage input prior to applying power.

2) Verify equipment powers up and operates correctly.

3) Perform trip functions and verify equipment returns to normal operation with only necessary operator intervention.

4) Complete checklist above by entering a checkmark (CM) for acceptable, or R for needs repair or attention, or NA for not applicable

Attention Requied:

CERTIFIED BY: _____ _____ _____

SIGNATURE COMPANY DATE

WITNESSED BY: _____ _____ _____

SIGNATURE COMPANY DATE

BREAKER DEVICE TEST FORM

PROJECT NAME: _____ DATE OF TEST: _____

TESTING COMPANY: _____ TEST LOCATION: _____

PANEL NAME: _____ PANEL TAG #: _____

PANEL TYPE: _____

EQUIPMENT INFORMATION

EQUIPMENT NAME: _____ EQUIPMENT H.P.: _____

EQUIPMENT TAG#: _____ EQUIPMENT KVA: _____

BREAKER INFORMATION

MANUFACTURE: _____ VOLTAGE: _____ CHARACTER: _____

PART #: _____ INTERRUPT: _____ CURVE: _____

FRAME #: _____ RATING: _____ LOCATION: _____

BREAKER TESTS

MFGR TRIP TIME @300% MIN: _____ BREAKER RATING/ RANGE: _____

MFGR TRIP TIME @300% MAX: _____ FINAL BREAKER SETTING: _____

MFGR INST. PICKUP AMPS: _____

CONTACT RESISTANCE TESTS - OHMS			INSULATION RESISTANCE TESTS - MEGOHMS		
PHASE A	PHASE B	PHASE C	A-GND	B-GND	C-GND

CURRENT TESTS TRIP TIME IN SECONDS @ 300% AMPS			INSTANTANEOUS CURRENT TRIP TESTS AMPS		
PHASE A	PHASE B	PHASE C	PHASE A	PHASE B	PHASE C

ADDITIONAL TESTS AND SETTING AS APPLICABLE

	PICK UP		DELAY-TIME		
FUNCTION	RANGE	SETTING	RANGE	SETTING	
LONG TIME					
SHORT TIME					
GROUND FLT.					

NOTES:

1) All breakers shall be checked for proper mounting, conductor size, and feeder designation. Operate circuit breaker to ensure smooth operation. Inspect case for cracks or other defects. Check tightness of connection with torque wrench in accordance with manufacturer's recommendations.

2) Thermal magnetic breakers, 100 amps and above, shall be test pet NETA specification 7.6.1.1. Time current characteristic tests shall be performed bypassing 300% rated current through each pole separately. Trip time shall be noted. Instantaneous pickup current shall be determined by run up or pulse method. Clearing times should be within 4 cycles or less. At end of test the thermal breakers shall be set by Contractor.

3) Magnetic breakers (MCP), regardless of amperage rating, shall be tested. Instantaneous pickup current shall be determined by run up or pulse method. Clearing time should be within 4 cycles or less. At end of test the breaker trip setting shall be set by Contractor based on the motor locked rotor current.

4) Contact resistance shall be measured and be compared to adjacent poles and similar breaker. Deviations of more than 50% shall be reported to Engineer. Insulation resistance shall be measured and shall not be less than 50 megaohms. All trip times shall fall within NETA Table values. Instantaneous pickup current levels should be within 20% of manufacturer's published values.

CERTIFIED BY: _____ _____ _____

SIGNATURE COMPANY DATE

WITNESSED BY: _____ _____ _____

SIGNATURE COMPANY DATE

MOTOR TEST FORM

PROJECT NAME: _____ DATE OF TEST: _____

TESTING COMPANY: _____ TEST LOCATION: _____

MOTOR NAME: _____ MOTOR TAG: _____

SERIAL #: _____

MOTOR NAMEPLATE DATA

MFG:	_____	PHASE:	_____	TYPE:	_____	P.F:	_____	S.F:	_____	NEMA:	_____
VOLTS:	_____	HP:	_____	DUTY:	_____	RPM:	_____	CODE:	_____	DESIGN:	_____
FREQ:	_____	FLA:	_____	MODEL:	_____	FRAME #:	_____	ROTATION (CW/CCW):			_____

INSULATION RESISTANCE TEST PHASE-TO-GROUND/PHASE-TO-PHASE

A: _____ / _____ B: _____ / _____ C: _____ / _____

CONTROL SETTINGS AND TESTS

MOTOR HEATER MEASURED AMPS:	_____ (AMPS)	MOTOR OVERLOAD SETTING:	_____ (AMPS)			
MOTOR THERMAL TRIP TEST:	_____	OVERLOAD RESET TEST:	_____ (YES/NO)			
MINIMUM SPEED (IF VFD):	_____ (HERTZ)	COIL RESISTANCE:	AB	BC	CA	

PHYSICAL MOTOR TESTS - ACTUAL MEASURED VALUES

VOLTAGE (VOLTS)		AMPERAGE (AMPS)		POWER	
AB:	_____ V	A:	_____ A	POWER FACTOR:	_____
BC:	_____ V	B:	_____ A	POWER DRAW:	_____ KW
CA:	_____ V	C:	_____ A	HORSEPOWER:	_____ HP
IMBALANCE:	_____ %	IMBALANCE:	_____ %		

NOTES:

1) Perform coil resistance measurements on motor leads with a low-resistance ohmmeter. Note measurements.

2) Perform insulation-resistance test utilizing 500 volt megger and/or accordance with manufacturer's published testing procedures. Motors 200 HP and more test duration 10 minutes, 200 HP and less test duration 1 minute.

3) Perform DC overpotential tests on motors rated 1000 HP and 4000 volts or greater in accordance with ANSI/IEEE Standard 95.

4) Verify that pump/shaft seals are lubricated and that automated lubrication systems are functional.

5) Verify that motor protection/monitoring circuits are installed and connected per contract drawings and manufacturer requirements.

6) Verify that the motor space heater is functional.

7) Perform a rotation test to insure correct shaft direction by "bumping" motor. Reverse as necessary in appropriate place. Phase taping must remain in order on terminals left-to-right once completed.

8) Measure running current and evaluate relative to load conditions and nameplate full-load amperes.

9) Record the voltage and current on all phases while operating under full-load. If voltage or current imbalance is above 2 percent, or if current is above nameplate FLA or expected level, investigate cause and report on findings. Calculate imbalance by dividing (high minus low measurement) by the average measurement of all 3 phases.

10) Vibration tests shall be conducted when ordered by the Engineer in cases of discernible abnormal vibration. Vibration shall not exceed 0.05 in./sec. Make necessary corrections to reduce vibration below limit at all operational speeds and loads.

COMMENTS:

CERTIFIED BY: _____ _____ _____

SIGNATURE COMPANY DATE

WITNESSED BY: _____ _____ _____

SIGNATURE COMPANY DATE

HARMONIC MEASUREMENT TEST FORM

PROJECT NAME: _____ DATE OF TEST: _____

TESTING COMPANY: _____ TEST LOCATION: _____

TECHNICIAN _____ EQUIPMENT NAME: _____

POINT OF MEASUREMENT: _____

(If available, take measurements on primary side of main breaker, otherwise, on secondary side of main breaker.)

COMMENTS:

MEASURED HARMONIC VOLTAGE VALUES												
RUNNING CONDITION			TIME	VOLT	AMPS	THD(V)	THD(A)	5TH	7TH	11TH	13TH	15TH
PUMP 1 SPEED	PUMP 2 SPEED	PUMP 3 SPEED										
0	0	0										
70	0	0										
90	0	0										
100	0	0										
70	70	0										
90	90	0										
100	100	0										
70	70	70										
90	90	90										
100	100	100										

NOTES:

1) Measure the harmonics with a harmonic analyzer with each combination of pumps shown or as designated by Engineer at start-up in operation on the Utility source. Repeat test on generator (if applicable).

2) Use multiple forms and/or attach printouts of harmonic analyzer machine.

4) Expand this chart for pump stations/systems with more than 3 VFD pumps.

5) All harmonic conditioning equipment shall be on-line and operate other non-VFD loads as normal during test.

CERTIFIED BY: _____ _____ _____

SIGNATURE COMPANY DATE

WITNESSED BY: _____ _____ _____

SIGNATURE COMPANY DATE

PROGRAMMABLE LOGIC CONTROLLER I/O POINT-TO-POINT TEST FORM

PROJECT NAME: _____ DATE OF TEST: _____

TESTING CO: _____ TEST LOCATION: _____

PANEL NAME: _____ PANEL TAG #: _____

PLC NAME: _____ RACK # _____ SLOT # _____ I/O TYPE _____

I/O POINT			Scale			Digital	Operator	SCADA	Pass/Fail
I/O #	TAG #	Description	@4mA	@20mA	Units	On/Off	Interface	Screen	CM or R
1									
2									
3									
4									
5									
6									
7									
8									
9									
10									
11									
12									
13									
14									
15									
16									

NOTES:

1) Connect signal generator to each I/O point for factory testing.

2) Utilize connected to device to generate signals for field pre-operational tests.

3) Verify function and accuracy of loop by by switching the digital signal or modulating the analog signal from the device.

4) Field verify all instruments and indicators within loop of signal.

4) Confirm polarity of signals and calibration ranges are equivalent for all components in loop.

5) Include significant digits past decimal in scale columns

6) Complete checklist above by entering a checkmark (CM) for acceptable, or R for needs repair or attention

7) Note items that need attention below

Attention Requied:

CERTIFIED BY: _____ _____ _____

SIGNATURE COMPANY DATE

WITNESSED BY: _____ _____ _____

SIGNATURE COMPANY DATE

INSTRUMENTATION SWITCH CALIBRATION TESTS FORM

PROJECT NAME: _____ DATE OF TEST: _____

TESTING COMPANY: _____ TEST LOCATION: _____

INSTRUMENT NAME: _____ INSTRUMENT TAG#: _____

INTRUMENT UNITS: _____ NAME: _____

TYPE: _____ MODEL: _____

SERIAL #: _____

MANUFACTURER	INSTRUMENT
NAME: _____	UNITS: _____
TYPE: _____	
MODEL: _____	
SERIAL #: _____	

PROCESS SETPOINT	INCREASING TRIP POINT	DECREASING TRIP POINT	DEADBAND	SETPOINT TIME DELAY	ACTUAL TIME DELAY

NOTES:

1) Include mounting elevations for level instruments.

CERTIFIED BY: _____ _____ _____

SIGNATURE COMPANY DATE

WITNESSED BY: _____ _____ _____

SIGNATURE COMPANY DATE

INSTRUMENTATION TRANSMITTER CALIBRATION TEST FROM

PROJECT NAME: _____ DATE OF TEST: _____

TESTING COMPANY: _____ TEST LOCATION: _____

INSTRUMENT NAME: _____ INSTRUMENT TAG#: _____

MANUFACTURER	INSTRUMENT
NAME: _____	RANGE: _____
TYPE: _____	SCALE: _____
MODEL: _____	UNITS: _____
SERIAL #: _____	TRANSMITTER OUTPUT: _____
REMOTE SENSOR TYPE: _____	FACTORY SPECIFIED ACCURACY: _____
(If Applicable)	REMOTE SENSOR OUTPUT: _____
	(If Applicable)

DESIGNED VALUE				ACTUAL VALUE			
INPUT SIGNAL	OUTPUT	ENG VALUE	CALCULATED TOLERANCES	INSTRUMENT DISPLAY	INSTRUMENT OUTPUT SIGNAL	PROCESS INDICATOR	LOGIC VALUE

NOTES:

1) Attach factory calibration forms for all flowmeters.

2) Provide separate form for each instrument.

3) Field test and calibrate all control systems and instrumentation in accordance with the specifications and the manufacturer's instructions. Instrumenatation shall meet specified accuracy or shall be repaired / replaced.

4) Provide parameter value for each parameter changed from factory default.

CERTIFIED BY: _____ _____ _____

SIGNATURE COMPANY DATE

WITNESSED BY: _____ _____ _____

SIGNATURE COMPANY DATE

PUMP PERFORMANCE TEST FORM

TEST NUMBER: _____ DATE OF TEST: _____

PUMP EQUIPMENT #: _____ WATER TEMP: _____

AMBIENT TEMP: _____

GUARANTEED PUMP CONDITIONS					
PPM	GPM	TDH	%EFF	NPSH	SPGR

DIMM TO DATIUM: _____ SUCT GAGE RANGE AND ACCURACY: _____

CL OF SUCT PIPE: _____ DISC GAGE RANGE AND ACCURACY: _____

CL SUCT GAGE: _____ LIST VALVES, PIPE CHANGES ETC BETWEEN PUMP AND GAGES:

CL DISC GAGE: _____ _____

MOTOR NAMEPLATE DATA								
MAKE	SERIAL NO.	TYPE	FRAME	VOLTS	AMPS	RPM	HP	

PIPE SIZE	PIPE LENGTH GAGE TO PUMP	FLOW METER
SUCT:	SUCT:	TYPE:
DATE:	DATE:	ACCURACY:

		SUCT HEAD (1)		DISC HEAD (2)						PWR MEASURE	
TEST POINT	FLOW GPM	PSG/ IN HG	FEET OF H20	PSIG/ IN HG	FEET OF H20	PRESS DIFF FT H20 (1-2)	EL DIFF. GAGE CENT. FT (3)	FRICT. HEAD FT H20 (4)	TDH IN FT H20 2-1 +3+5	H20 HP (7)	WATT MTR KW
1											
2											
3											
4											
5											
6											
7											
8											
9											

	POWER MEASUREMENTS					TEMPERATURE READINGS					
TEST POINT	VOLTS	AMPS	PWR FACTOR	ELEC HP (8)	% EFF (7/8) *100	MTR	ERG	MIDFT	PUMP BRGS		
1											
2											
3											
4											
5											
6											
7											
8											
9											

PUMP DATA:	PUMP MODEL:
IMPELLER DIAMETER: _____	PUMP SERIAL NUMBER: _____
IMPELLER PATTERN: _____	PUMP SIZE: _____

NOTES: 1) Complete 1 form for each pump

CERTIFIED BY: _____ _____ _____

SIGNATURE COMPANY DATE

WITNESSED BY: _____ _____ _____

SIGNATURE COMPANY DATE

SECTION 16905 - CONTROL PANEL

PART 1: GENERAL

1.01 SCOPE OF WORK

A. Provide and install Control Panel on concrete pad per drawings.

B. Provide complete wired, programmed panel with all devices installed per the contract drawings and as stated herein.

C. Provide all necessary hardware, conduit, wiring, fittings, and devices to connect the control panel to equipment provided under other Sections.

1.02 RELATED SECTIONS

A. Section 16010 – Electrical.

B. Section 16120 – Wire, Fuses and Terminal Blocks

C. Section 16910 – PLC & OI Hardware and Firmware

D. Section 16915 – PLC & OI Application Programming

E. Section 16940 – Instrumentation

1.03 SUBMITTAL REQUIREMENTS

A. Provide submittals and drawings as specified in Section 16010 - Electrical, Submittal Requirements.

B. Submit shop construction drawings for the Control Panel. The following drawings shall be provided as a minimum:

1. Scaled drawings of the Control panel elevation, baseplan. The dimensions and locations of the cutouts shall be dimensioned from the bottom left corner of the door(s).

2. Scaled drawings of the backpan including all mounted components and wireways.

3. Wiring diagrams for AC and DC power distribution, I/O for each card in the PLC and communications block diagrams.

PART 2: PRODUCTS

2.01 POWER SUPPLIES

A. Uninterruptible Power Supply (UPS)

1. The UPS shall be installed within the control panel and power all process related 120 VAC devices and DC power supplies.

2. The UPS capacity/size shall be as shown in the contract drawings. The battery capacity shall be such that it may provide nameplate power for 10 minutes (min) from a fully charged battery(s).

3. The UPS shall provide surge protection and filtering: 0.3% IEEE surge let-through, zero clamping response time to meet UL 1449. The inverter shall provide true sine wave output.

4. When the Utility power voltage is outside of a preset range (approx. <100 < V < 130 VAC) then the UPS shall power the load from storage batteries and a solid state inverter.

5. The power supply shall be wired into the control panel power circuit per the contract drawings.

6. The UPS operating ambient temperature range shall be 32 deg F to 122 deg F minimum.

7. The inverter shall be self resetting and continuously on-line regardless of the Utility power existence. Configure the UPS to restart automatically upon restart of utility power without operator intervention. The rectifier/charger shall recharge and maintain float charge on the batteries automatically.

8. The UPS shall have status "UPS ON-LINE" and "UPS LOW BATTERY" dry contacts for monitoring as required per contract drawings. Provide isolation relays and UPS accessory card as necessary for interface.

9. The UPS shall be of a readily available commercial manufacturer. Provide American Power Conversion Smart UPS, MGE Pulsar Evolution or approved equal.

B. DC Power Supply (PS)

1. The DC power supply shall utilize a switching power stage, rectifier and voltage regulator. The power supply case shall be DIN rail mountable.

2. The power supply shall operate on 120V AC and provide DC output voltage and current as shown in the Contract drawings.

3. The power supply shall be wired and fused per manufacturer instructions and Contract drawings. Power supply output shall include self resetting

overcurrent protection.

4. The power supply shall provide 2% voltage regulation for a change of 10% load to 100% full load.

5. The DC power supply shall be IDEC PS5R Series, Phoenix Contact Quint Power, Genesis Automation GDA, or approved equal.

2.02 MISCELLANEOUS COMPONENTS

A. Circuit Breaker: The disconnecting circuit breaker shall be din rail mounted with finger safe pressure plate terminals. Provide Allen Bradley 1489-CB or approved equal.

B. Intrusion Switch: The intrusion switch shall have a pin plunger that is depressed when the door is closed. The form C contacts shall be rated 2A at 120 VAC. Provide Hoffman A-LFSWD, Microswitch 1AC2 or approved equal.

C. Fluorescent Light: The fluorescent light shall be an "under cabinet" style with a single bulb and acrylic diffuser. Lamp shall be switched on/off with an integral door activated pin switch. Fluorescent Light shall be Hoffman A-LF series of length shown on Contract drawings, or approved equal.

D. Circulation Fans: The control panel temperature shall be maintained 10 deg. F below lowest internal device's temperature rating. The fans shall be 4" (min), 100 CFM, unless otherwise noted on Contract drawings. The Contractor shall calculate the heat generation of all internal components and determine if the fans submitted will meet the cooling requirements of the internal components. Circulation fans shall be Dayton (Grainger #4C549) with wire guard (or louver with filter as required), Genesis Automation KRYOS GVK1000, or approved equal.

E. Forced Air Heater: The control panel temperature shall be kept above 50 deg. F through the use of a resistive forced air heater when the panel is located outdoors. The heater shall contain a fan, heating elements, and thermostat within a single self contained unit. The wattage of the heater shall be as calculated by the supplier using the manufacturers sizing method to meet the temperature requirements. The heater shall be Hoffman D-AH series, Genesis Automation Cirrus 80, or approved equal.

F. Thermostats: The air circulation fans shall be controlled by adjustable thermostat. The thermostat shall be mounted near the top of the panel and easily accessible by a technician. The thermostat shall be capable of control of a heater or cooling fan(s) by selecting the proper contact logic. The thermostat range shall be adjustable from 30 to 140 deg F. Thermostat shall be Hoffman A-TEMxx, Genesis FGTxxx or dual heat/cool version Genesis Automation ZR011 as

required for application or approved equal.

G. Wireway: Manufactured from light gray rigid PVC suitable for continuous use at temperatures up to 50 deg C. Wireway shall be 2" height, width as required with 0.5" slot spacing with removable covers. Provide Panduit type "F" or approved equal.

PART 3: EXECUTION

3.01 WORKMANSHIP

A. All work in this Section shall conform to the codes and standards specified in Section 16010 - Electrical.

B. Ensure that all components fit within the panel, on the backpan or door, with proper clearances per manufacturer's instructions.

C. Perform work to remedy non-compliant installations after inspection.

D. The Engineer reserves the right to halt any work that is found to be substandard or being installed by unqualified personnel.

3.02 INSTALLATION

A. Equipment Mounting:

1. Mount all equipment using manufacturers mounting tabs/holes where possible. Where not possible, construct custom brackets to panel mount or backpan mount components as shown in the Contract drawings.

2. Equipment or laptop shelves shall be provided where shown on the Contract drawings. Equipment shown on shelves shall not be placed on the bottom of the panel after field installation.

3. All nuts, bolts, screws, washers and hinges used in the panel shall be stainless steel. All components shall be mounted using bolts or screw fasteners only which are drilled and tapped into the backpan. Pop rivets shall not be allowed within panel except for enclosure support arms.

B. Wiring:

1. Install all products per 16010 - Electrical, Installation.

2. All field wires and panel wires shall be per section 160120 – Wire, Fuses & Terminal Blocks.

3. Panel Wiring: All wiring shall be installed in wireways between terminal

blocks, PLC and devices. Reference Contract drawings for Control panel power distribution diagram and control panel elementary diagrams.

4. Field Wiring: Wireways shall be provided for field wiring. Reference Contract drawings for Control panel power distribution diagram and control panel elementary diagrams

C. Cleaning:

1. The Contractor shall clean the inside of the control panel of any dust or debris remaining at the completion of installation and testing. The Contractor shall exercise care when using a vacuum cleaner or compressed air such as not to permanently damage any component within the panel.

3.03 OPERATING AND MAINTENANCE INSTRUCTIONS

A. Provide operating instructions as specified in Section 16010 - Electrical, Operation and Maintenance Instructions.

3.04 FIELD ASSISTANCE

A. Provide testing as specified in Section 16600 – Factory and Field Testing.

3.05 WARRANTY

A. Provide warranty as specified in Section 16010- Electrical, Warranty.

-END OF SECTION-

SECTION 16910 - PLC AND OI HARDWARE

PART 1: GENERAL

1.01 SECTION INCLUDES

A. Providing and installing Programmable Logic Controller (PLC) and Operator Interface Hardware and all supporting hardware, wiring and devices as specified in division 16.

1.02 RELATED SECTIONS

A. Section 16010 – Electrical
B. Section 16120 – Wire, Fuses and Terminal Blocks
C. Section 16915 – PLC and OI Application Programming

1.03 PROJECT SUBMITTALS

A. Provide submittals per Section 16010.

B. Submit documentation showing the number and type of I/O modules required to meet the I/O requirements specified herein. Include complete manufacturer's part and model numbers.

1. PLC I/O points are determined by the P&ID drawings. The Contractor shall count and total the PLC I/O points per PLC controller and per type of I/O required based on the P&ID diagrams. Provide 25% spare I/O points per I/O type per PLC.

C. Submit shop drawings showing physical backpan layout of equipment in Control Panel.

D. Submit PLC communications block diagram showing I/O module order and slot location.

1.04 OPERATION AND MAINTENANCE DATA

A. Submit hardware Operations and Maintenance Manual per Section 16010.

B. Submit original Operations and Maintenance Manuals for PLC hardware, no copies.

1.05 CONTRACT CLOSEOUT SUBMITTALS

A. Provide manufacturer's warranty certificates for items supplied.

B. Submit original manufacturer's operations and maintenance manuals, no copies.

C. Provide training and manuals per section 16010 OPERATING AND MAINTENANCE INSTRUCTIONS.

1.06 PROJECT/SITE CONDITIONS

A. Project / site conditions are as specified in Section 16010 Electrical, JOB CONDITIONS.

PART 2: PRODUCTS

2.01 GENERAL

A. Provide a Tesco L2000 based PLC system with I/O modules and full size operator interface. No equals are allowed for PLC and OI components since they are required to match Sacramento Suburban Water District standards

PART 3: EXECUTION

3.01 FABRICATION

A. Mount, wire and Ground PLC and OI per manufacturer’s recommendations.
B. Organize equipment on control panel backpan per Backpan Layout detail in Contract drawings.
C. Locate and install PLC(s) and OI(s) per Contract drawings.

3.02 WIRING

A. Terminate status, control and analog wiring on terminal blocks.
B. Label and wire PLC to terminal blocks per Section 16020-Wire, Fuses & Terminal Blocks and Example I/O Wiring Diagram in the Contract drawings.
C. All spare I/O points shall be wired to terminal blocks.
D. Install communication cable between Operator Interface and PLC.
E. Bundle and tie down wires in a neat and orderly manner.
F. Terminate drain wire of shielded cables at backpan terminal block only.

3.03 WARRANTY

A. Provide warranty per Section 16010.

B. Perform the following services during the warranty period:

1. Repair or replace damaged modules returned for service within 24 hours.
2. Determine and report the cause of failure of modules returned for service.
3. Resolve design or implementation problems discovered.

3.04 MAINTENANCE

A. Provide special tools, cabling and equipment necessary for normal operation, maintenance and calibration.

3.05 FINAL ACCEPTANCE

A. Obtain final acceptance as specified in Section 16010 - Electrical, Final Acceptance.

-END OF SECTION-

SECTION 16915 - PLC & OI APPLICATIONS PROGRAMMING

PART 1: GENERAL

1.01 SECTION INCLUDES

A. Applications Programming for Programmable Logic Controller (PLC) and Operator Interface (OI).

B. Related work as specified in Section 16010 - Electrical.

1.02 SUBMITTALS

A. Provide submittals per Section 16010-Electrical, Submittal and Drawing Requirements.

B. Submit software operations manual including the following as a minimum.

1. Program Code

   a. Program code demonstrating function in compliance with descriptions herein.
   b. Incorporate tag references into each program register. Tag references shall be shown in program code with program registers.
   c. Comment for each block of code explaining purpose of program block.
   d. Comment each program rung for purpose within block.

2. Setpoint listing with description

3. Program description

   a. Provide written description of program operation. Description shall cover all aspects of normal operation and alarm shutdowns. Describe all alarms and their effect on operation. Describe alarms that require manual reset.

4. Register cross reference listing
   a. The listing shall be in table format and include all program constants and variable registers with their functions.
   b. The listing shall show (block and rung number) where the register is used within the program code.

5. Configuration and Set-up
   a. The configuration of the processor and hardware selections shall

be summarized.

b. The configuration of the communication ports shall be shown.

6. Data Tables

a. Print data tables with initial register values shown.

7. Special files

a. Include any special files that are particular to the manufacturer. All files pertinent to programming or configuration shall be submitted.

C. Submit software documentation demonstrating understanding of control software requirements and compliance with Portability and Maintainability requirements specified in this Section.

1.03 PROGRAMMING METHODS

A. Design and code programs per the following:

1. Clearly comment each run of ladder logic code. Include module headers detailing the purpose of the module, programmer name, date of last revision, revision history, and description of sequence of events.

2. Code shall use the P&ID ISA I/O point designations as labels or nicknames throughout the ladder logic.

3. Code shall use the P&ID I/O point designations as labels or nicknames where possible, in comment areas at minimum.

B. All custom software, including diagnostic, configuration and applications programming software shall become the sole property of the Owner for their use on this and future Owner projects.

C. No software or documentation shall be labeled proprietary.

D. Provide complete hardware and original manufacturer software manuals describing how to use the configuration software.

E. Provide two (2) disks copies and two (2) hard copies of all as-installed programs at the end of the project.

F. Furnish and maintain 256MB (min) USB RAM stick on site and within control panel so that latest program files are always available and up-to-date. Upon conclusion of each downloaded program change, the USB RAM stick shall be updated.

1.04 APPLICATIONS PROGRAMMER

A. All programming shall be performed by an application programmer with prior experience on similar PLC & OI projects. The Engineer will judge if the application programmer assigned to this project is adequate for the task. If the programming performed is deemed inadequate by Engineer, then the System Integrator shall replace the application programmer for one with more experience and skill to meet these requirements.

PART 2: PRODUCTS

2.01 APPLICATIONS PROGRAMMING SOFTWARE

A. Provide applications programming software, in new/unused condition, and in the original packaging to the Owner for their use.

B. The software shall be of latest revision available at time of delivery to the Owner and the same revision number as that used by the Contractor to program the PLC. If the revision numbers of the software provided in the box and that used for programming are different, the Contractor shall make whatever changes are necessary to make the applications program compatible with the applications software provided.

C. The following software shall be provided under this contract.
   1. Latest revision of programming software for the PLC suitable for installation on a Windows PC. Revision shall be as available at time of bid.

2.02 APPLICATIONS PROGRAM CODE

A. Provide applications programs in the PLC to execute the control strategies as described herein, as shown on the Contract drawings, and as can be reasonably determined from the overall project scope. The Contractor shall provide application program code that performs to the intent of the descriptions and any additional supporting program code for a fully operational processor and system.

B. The Contractor shall provide the PLC & OI completely configured and programmed for the monitoring and control of the facility. Work shall be completed in a timely manner such that all other parts of the contract may proceed un-inhibited. There shall be no expectation that any program logic or configuration will be performed by others.

C. The control strategies for the PLC & OI are intended as guidelines for the System Integrator to use to program the PLC. The descriptions are intended to be general in nature and do not contain all details to program a fully functional and robust PLC logic program. Many details concerning programming methods and

procedures are the responsibility of the qualified Contractor to design and implement. The descriptions are written for best transference of intent may not be the best way to code the program. Errors and omissions in details shall be the Contractor's responsibility to infill and correct. The Contractor shall meet the intent of the strategies specified, making modifications as necessary to provide an operational system.

D. The program code shall be written without any "hard-coded" constants that would effectively require a program change to modify the value. All function blocks shall contain variable registers only.

2.03 CONTROL STRATEGIES

A. GENERAL REQUIREMENTS

1. The following requirements (General and Specific) are intended to be used as a guideline for application programming of the PLC. They are the major functions and are not intended to be completely comprehensive of all requirements of the station operation and do not attempt to cover all necessary program routines for an operational system. Additional features and functions and registers will be required for an operational system.

2. The Station ID prefix as shown in the P&ID drawings is not included in the strategies herein and is not required to be documented within the program.

3. The following general program functions shall be provided:

   a. Enable/disable toggle bits and variable time delays for all alarms.

   b. Analog input noise filtering -- software or firmware.

   c. SCADA Auto-off-Manual controls for all equipment controlled by the PLC. These control buttons shall also be accessible via the OI(s).

   d. Resettable and non-resettable operation hour meters for equipment.

   e. Scaling to engineering values of all variables. Minimum of 3 significant digits required.

      1) Level in 1/10th Feet or Inches
      2) Pressure in 1/10th PSI.
      3) Flow in GPM.
      4) Flow totalization
         a) Total non-resettable flow displayed in MGD with 9999999.999 presentation layout.

b) Total resettable flow displayed in MGD with 9999999.999 presentation layout.

c) Total yesterday flow displayed in KGAL with 99999.9 presentation layout.

d) All registers shall roll over to zero automatically.

5) Speed in percent %.

f. Data register types:

1) Any register that requires precision past the decimal shall be floating point type.

2) Integer registers may be used where decimal precision is not required.

3) Boolean registers shall be used for all statuses and on/off controls.

g. Transducer out of range alarms. If the scaled value of the analog input exceeds 21 mA of falls below 3.5 mA, an out of range alarm shall be triggered for that input.

h. All setpoints registers, enable/disable toggle bits and settable variable time delays shall be adjustable from the OI direct to program data table.

i. Communications messaging as required to share data information and interlocks between PLCs. Message structure shall be fail safe as to keep overflows or other improper operation from occurring.

j. A power fail shall reset all routines.

k. Pumps or equipment shall have backspin delays and power fail sequential re-start delay routines.

l. If a device is called to start or move and the associated run status does not confirm start or move after a time delay then post a device fail alarm. (UAxxSF)

m. Out of Auto alarm. All devices (valves, gates, pumps) with auto switch monitoring shall have associated “out of auto” alarms. (YAxxF)

n. Programming code shall have automatic error checking and proper initialization to prevent illegal operations such as negative values being placed in timer presets or mathematical out of range functions which could cause a processor fault.

o. PLC shall be programmed so that, in the event of a power interruption, the equipment controlled shall resume normal operation without requiring a manual reset unless otherwise shown.

B. SPECIFIC REQUIREMENTS

1. ALARMS GENERAL

a. The following table summarizes the alarms required and associated tag references for this project. If an alarm requires to be latched, it is shown with an "L" in the latch column immediately after the alarm tag reference.

Inputs	Description	Alarm 1 /High	Latch	Alarm 2 /Low	Latch	Units
UA10F	VFD Fail	UAF10	L			
UA10S	SSS Fail	UAS10	L			
UA10C	Waste Valve not closed alarm	UAC10	L			
L51	Well Level	LAH51		LAL51	L	FT
L52	Hypochlorite Tank Level	LAH52	L	LAL52	L	IN
P61	System Pressure	PAH61	L	PAL61		PSI
F71	Well Flow	FAH71		FAL71	L	GPM
FA75H	Eyewash Flow High	FAH75	L			
A81	Chlorine Residual	AAH81	L	AAL81		MG/L
A91	Electrical Room Temperature	TAH91	L	TAL91		Deg F
SA98	Smoke Detected	SAA98	L			
EA95AL	120 V AC power fail	EAL95A				
EA95BL	UPS output failure	EAL95B	L			
EA99L	480 V AC power fail	EAL99				
	Communications fail	DA100	L			
R01A	Alarm Acknowledge	R01A				
R01R	Alarm Reset	R01R				
Outputs	Description	Outputs				
X01	Station Alarm Light	X01				

b. Setpoints/Timers/Alarms

1) Use the following format to define tag references for setpoints, timers and alarms associated with the alarms defined above.

2) Strip leading Alpha characters from the input tag

3) Prefix each input/output tag with the following for:

a) SPTfor timer sepoints
b) SPL for pressure, level, etc. setpoints (unit values)
c) K for timers (seconds, hours, increment counters)

c. Analog Alarms

1) If an analog value is above/below the associated setpoint, and the associated time delay has exceeded the time setpoint, then the alarm shall be generated/annunciated.
2) Transducer fails as described in Control Strategies, General Requirements, in this section.
3) The alarm shall automatically reset unless it is designated as “latch”. A latching alarm requires manual reset
4) Well low flow alarm and Chlorine Residual low alarm shall only be enabled when the well pump is running.

d. Digital Alarms

1) If the digital input state is true and the associated time delay has exceeded the time setpoint, then the alarm shall be generated/annunciated.

2) The alarm shall automatically reset unless it is designated as “latch”. A latching alarm requires manual reset.

e. Communications Alarm

1) The SCADA shall monitor for communications and shall post an alarm if the PLC fails to respond to message queries.

2. INTRUSION ALARM

a. Inputs/Outputs

Inputs	Description	Units
Z93	Intrusion Bypass Timer	
ZA93A~D	Building Door Open	

Outputs	Description
X01	General Alarm

b. Setpoints/Timers/Alarms

Setpoints	Description	Units
SPT93	Intrusion alarm door delay	Seconds

Timers	Description	Units
K93	Intrusion door delay	Seconds

Alarms	Description	Latch
ZAY93	Intrusion door	Latch

c. Intrusion Alarm

1) If the door input (ZA93) is set, then if the intrusion bypass timer (Z93) is not set and the intrusion door timer (K93A) exceeds the intrusion door setpoint (SPT93A), then the intrusion door alarm (ZAY93A) shall be set.

2) The alarm shall automatically reset unless it is designated as “latch”. A latching alarm requires manual reset.

3. TOTALIZATION

a. Inputs/Outputs

Inputs	Description	Units
F71	Station Flow	GPM
N10R	Well Pump run	Run/off
ZS11C	Waste Valve Close	Closed/null

Outputs	Description
	None

b. Timers/Totalizers

Timers	Description	Units
K10	Well Pump running hours	Hours

Totalizers	Description	Units
Q71	Flow Totalizer	KGal

c. Flow totalization

1) If station flow (F71) is above 1% of maximum flowrate, and waste valve is closed (ZS11C) then increment flow

totalizer (Q71) and resettable flow totalizer (Q71R) for each 1000 gallons of accumulated flow.

2) If internal flow reset status (Y71) is set, then set resettable flow totalizer (Q71R) to zero and reset Y71

d. Hour Meters

1) If Well Pump running (N10R) is set, then start hour timer K10.

4. PUMP START CONTROL

a. Three start modes are specified herein – Time of day, and Time of day with pressure limits, and time of day with remote tank level control. The waste valve is controlled directly by the motor controls.

b. Inputs/Outputs

Inputs	Description	Units
HN10A	Well Pump in auto	Auto/Null
YN10R	Well Pump run	Run/Off
UA10F	Well Pump VFD fail	Fail/Null
ZS11O	Waste Valve open	Open/Null
P61	System Pressure	PSI
PSH62	Discharge pressure high	High/Null
L51	Well Level	FT
L150	Tank Level (via telemetry, write from SCADA)	FT

Outputs	Description	
XC10S	Well Pump start	Start/Stop

c. Setpoints/Timers/Alarms

Setpoints	Description	Units
SPC01	Pump Control Mode (Time/Pressure/Level)	1, 2, 3
SPL60A	Well Pump start pressure	PSI
SPT60AD	Well Pump start delay	Seconds
SPL60B	Well Pump stop pressure	PSI
SPT60BD	Well Pump stop delay	Seconds
SPT10ESU	Well pump enable time Sunday	HH:MM
SPT10EMO	Well pump enable time Monday	HH:MM
SPT10ETU	Well pump enable time Tuesday	HH:MM
SPT10EWE	Well pump enable time Wednesday	HH:MM

SPT10ETH	Well pump enable time Thursday	HH:MM
SPT10EFR	Well pump enable time Friday	HH:MM
SPT10ESA	Well pump enable time Saturday	HH:MM
SPT10DSU	Well pump run duration time Sunday	HH:MM
SPT10DMO	Well pump run duration time Monday	HH:MM
SPT10DTU	Well pump run duration time Tuesday	HH:MM
SPT10DWE	Well pump run duration time Wednesday	HH:MM
SPT10DTH	Well pump run duration time Thursday	HH:MM
SPT10DFR	Well pump run duration time Friday	HH:MM
SPT10DSA	Well pump run duration time Saturday	HH:MM
SPL150A	Well Pump start level	PSI
SPT150AD	Well Pump start delay	Seconds
SPL150B	Well Pump stop level	PSI
SPT150BD	Well Pump stop delay	Seconds

Timers	Description	Units
K60A	Well Pump start delay	Seconds
K10T	Time of day clock	HH:MM

Alarms	Description	Units
	None	

d. Pump Enabled

1) Each day the well pump shall be enabled to operate at (SPT10EXX) time each day for a duration of (SPT10DXX). Substitute day of week for XX each day. Enable durations shall be capable of being set across midnight each day if required. If durations are above 24 hours, the pump shall be enabled continuous.

2) No Chlorine residual High Alarm (AAH81)

3) No Chlorine residual Low Alarm (AAL81)

4) Waste Valve is not failed.

5) No VFD fail alarm (UAF10) if switch not in SSS.

6) No SSS fail alarm (UAS10) if switch in SSS.

7) No well level low alarm (LAL51)

8) No low flow alarm (FAL71)

e. Pump available

1) If the pump is in auto (HNX0A), and not failed (UAX0F) then the pump is available to be started.

f. Pump Call (Time of Day Call) (SPC01 = 1)

1) If the well pump is enabled and time of day call is on and there is no well level low low alarm (LALL51), then start well pump (XC10S).

2) If the well pump is not enabled or time of day call is off or if there is a well level low low alarm (LALL51), then stop well pump (XC10S) and

g. Pump Call (Pressure Call) (SPC01 =2)

1) If the well pump is enabled and the system pressure (P61) drops below pump start pressure setpoint (SPL60A) for setpoint (SPT60AD) amount of time and waste valve is open (ZS11O), then start well pump (XC10S).

2) If the well pump is not enabled or if the system pressure (P61) rises above stop pressure setpoint (SPL60B) for setpoint (SPT60BD) amount of time, or if the pump speed output (SC10) is below minimum speed plus 0.25% (SPC60M + 0.25%), then stop well pump (XC10S).

h. Pump Call (Remote Level Call) (SPC01 =3)

1) If the well pump is enabled and time of day call is on, and the tank level (L150) drops below pump start level setpoint (SPL150A) for setpoint (SPT150AD) then start well pump (X10S).

2) If the well pump is not enabled or time of day is not on, or if the tank level (L150) rises above stop level setpoint (SPL150B) for setpoint (SPT150BD) amount of time, then stop well pump (X10S).

5. WELL PUMP SPEED CONTROL

a. If the VFD is selected, there are two speed selection options for Well Pump speed control – Well Level control and System Pressure control.

b. Inputs/Outputs

Inputs	Description	Units
P61	System Pressure	PSI
L51	Well Level	FT

Outputs	Description	
SC10	Well Pump Speed Control	%

c. Setpoints/Timers/Alarms

Setpoints	Description	Units
SPC02	Mode Selection	1,2
	Level Mode	
SPL51A	Level for Maximum speed	FT
SPL51B	Level for Minimum speed	FT
SPL51C	Speed at maxmum level (max speed)	%
SPL51D	Speed at minimum level (min speed)	%
	Pressure Mode	
SPL62A	PID Maximum	%
SPL62B	PID Minimum	%
SPL62C	PID Proportional gain	
SPL62D	PID Integral gain	
SPL62E	PID Derivative gain	
SPL62F	PID recalculation time	Seconds
SPL10S	Pump Start Speed	%

Timers	Description	Units
K62F	PID recalculation timer	Seconds

Alarms	Description	Units
	None	

d. Level Calculation (SPC02 = 1)

1) The Well level (L51) shall be used as the primary variable in a direct related linear algorithm. The pump speed shall increase with rising well level and decrease with decreasing well level. The setpoints listed shall allow tuning of the calculation.

2) Equations

a) %level = [(L51-SPL51B) / (SPL51A – SPL51B)]

b) speed range = (SPL51C – SPL51D)

c) Output speed = (%level * speed range) + SPL51C.

d) Limit output speed to max and min setpoints.

e. PID Calculation (SPC02 = 2)

1) The system pressure (P61) shall be used as the primary variable in an inverse related PID routine. The setpoints listed shall allow tuning of the PID calculation.

6. HYPOCHLORITE PUMP SPEED CONTROL

a. Inputs/Outputs

Inputs	Description	Units
F71	Well Flow	GPM
Z11C	Waste Valve Closed	

Outputs	Description	
SC42	Hypochlorite Pump Feed Rate	%
XC42	Hypochlorite Pump Start	

b. Setpoints/Timers/Alarms

Setpoints	Description	Units
SPL42G	Proportional gain Hypochlorite (0~100)	%
SPL42H	Flow value normalization (flowmeter scale maximum flowrate)	GPM
SPL42M	Maximum Speed	%
SPL42N	Minimum Speed	%

Timers	Description	Units
	None	

Alarms	Description	Units
	None	

c. Pump Start Control

1) If the well pump is running (YN10R) and Waste Valve

closed status is received (ZS11C) then start hypochlorite pump (XC42S).

d. Feed Rate Calculation

1) Proportional Component

a) The well flow (F71) / Flow value normalization (SPL42H) * proportional gain (SPL42G) equals pump feed rate (SC42) when enabled.

2) Common controls

a) Pump speed shall be limited to be between Maximum Feed (SPL42M) and Minimum Feed (SPL42N) when enabled.

b) If pump is not enabled, set feed rate (SC42) equal to zero.

7. HYPOCHLORITE USAGE CALCULATION

a. Inputs/Outputs

Inputs	Description	Units
L52	Hypochlorite Level	IN
XC42S	Hypochlorite Pump Start	

Outputs	Description
	None

b. Setpoints/Timers/Alarms

Setpoints	Description	Units
SPL42A	Hypochlorite volume per inch of tank	mL
SPL42B	Time interval to calculate usage	Min
SPL42C	Hypochlorite Usage Alarm Minimum	mL/Min

Timers	Description	Units
	None	

Alarms	Description	Units
UAY42	Low Hypochlorite Usage	

c. Hypochlorite Usage Calculation

1) Upon well pump start, read and store hypochlorite tank level.

2) After the time interval has elapsed (SPL42B) then read and store the hypochlorite tank level and subtract it from the previous reading.

3) Multiply the difference times the volume per inch of tank (SPL42A) to obtain usage in milliliters.

4) Calculate a usage rate by dividing the usage by time interval (SPL42B).

5) Recalculate every time interval (SPL42B).

6) Alarm for hypochlorite usage below minimum setpoint (SPL42C).

PART 3: EXECUTION

3.01 SOFTWARE DEVELOPMENT

A. The programming, setup and configuration of the PLC shall be done by the System Integrator.

B. The PLC shall be ready to be placed in operation at the time of Operational Testing.

C. Do not enable or set any passwords on the PLC software or hardware for this project.

D. Additional Programmer Labor Hours

1. The Contractor shall include in his bid price an additional 24 hours of PLC program configuration changes to be designated by the Engineer or Owner during testing and start-up.

2. All programming configuration changes shall be performed by the original programmer and shall be made in the presence of the Engineer in the field or shall be per written quote or directive.

3.02 TRAINING

A. The PLC manufacturer shall provide a minimum of 8 hours of training for 4 to 6 of the Owner's engineering, operations, and maintenance personnel. The training shall consist of the following minimum sessions:

1. 4 hours - PLC Introduction to Programming Course shall include:

    a. Training in entering programming using PLC manufacture's software.
    b. Interpreting organization of memory structure.

2. 4 hours - PLC Maintenance and Troubleshooting Course shall include:

    a. Copying, restoring and saving programs.
    b. Searching and replacing program elements.
    c. Modifying ladder programs and data table information.
    d. Isolating and safely correcting the most common problems in PLC system.

B. Training shall be administered by manufacturer trained personnel in a classroom type setting at the Station.

3.03 MEDIUM

A. Provide PLC applications programs on CD recordable disk media with each submittal . Clearly label CD with station name and contents. CD disk shall contain the following:

1. Application program, configuration and data tables.

2. These disks and all copyrights shall become the property of the Owner, for its use on this and future projects.

B. In addition, one USB RAM Stick of the application PLC & OI programs shall remain on site in the control panel. All programs and files shall be updated each time the System Integrator modifies the PLC program.

C. Provide two (2) copies of as-installed applications programs printed with standard laser print 8 1/2" x 11" paper at end of project. Insert new print-outs into the Operations and Maintenance manuals. Provide number of copies as specified in 16010 Operations and Maintenance Instructions.

3.04 FIELD ASSISTANCE

A. Provide testing as specified in Section 16600 – FACTORY AND FIELD TESTING.

3.05 WARRANTY

A. Troubleshoot and correct all program abnormalities, glitches and bugs uncovered during the warranty period. Provide phone and/or on-site support as required to correct problem(s).

B. Software support which shall be provided by the System Integrator:

1. Free technical PLC software and hardware configuration phone support for a period of one year. PLC / OI phone support shall be provided directly from the person(s) that configured the PLC / OI. Phone support shall be available between 8 a.m. and 4 p.m. Pacific Standard Time Monday through Friday.

-END OF SECTION -

SECTION 16925 - SCADA SYSTEM APPLICATIONS PROGRAMMING

PART 1: GENERAL

1.01 SCOPE OF WORK

A. Application programming and configuration of Existing Supervisory Control and Data Acquisition (SCADA) system located at the Sacramento Suburban Headquarters on Madison Avenue for display of station parameters, alarms and reports.

B. Setup, configure, program, and implementation of a Supervisory Control and Data Acquisition (SCADA) system that shall communicate and interface to Programmable Logic Controllers (PLC) and other control automated devices to maintain, monitor, and control the process located at Verner Avenue Well.

C. Work includes all required programming and/or integration of the existing human-machine interface / supervisory control and data acquisition (HMI/SCADA) software, auto-dialer software, report generation software, historical database software, and other required hardware and software components to yield a complete and operational system.

1.02 RELATED SECTIONS

A. Section 16010 – Electrical

B. Section 16915 – PLC and OI Applications Programming

1.03 SUBMITTALS

A. Provide submittals per Section 16010-Electrical, Submittal and Drawing Requiements.

B. Obtain, modify and submit SCADA layout and communications block diagram incorporating the new site. Submit RFI for ACAD file from previous projects for modification. SCADA diagram shall use similar conventions as previously used and be very detailed and include communication protocols, methods, radios and wire types.

C. Submit completed color screen print outs of the new SCADA system screens, including all menus. Submit one screen per sheet of paper.

D. Submit a list of all alarms identified by the system including descriptions as shown on the Alarm Summary screen.

E. Submit remote automatic alarm dialer voice script in a text version for review.

F. Submit a total of three (3) different report formats for review. Identify the report generation software and additional software utilized in creating and printing each report.

G. SCADA programmer's prior work experience and resume.

1.04 QUALITY ASSURANCE

A. The Owner reserves the right to judge if the SCADA application programmer assigned to this project is adequate for the task. If the programming performed is deemed inadequate by Owner, then the system supplier/integrator shall provide a qualified SCADA application programmer to meet these requirements.

B. The integrator's trained field representative shall have the following experience requirements:

1. Has programmed, setup, and configured similar sized control systems for the last two years with the System Integrator/Contractor awarded the project.

2. Has integrated similar SCADA systems into at least two water or wastewater treatment plant control systems using the same SCADA software (current or earlier versions) being used on this Project.

PART 2: PRODUCTS

2.01 SCADA APPLICATION SOFTWARE

A. No new application software is required to be supplied. Only existing SCADA applications program is to be modified. Existing SCADA software is Wonderware 8.5 or newer version.

PART 3: EXECUTION

3.01 WORKMANSHIP

A. Work shall conform to workmanship standards specified in Section 16010 - Electrical.

B. Perform work to remedy non-compliant installations after inspection.

3.02 SOFTWARE DEVELOPMENT

A. The programming, setup and configuration of the SCADA system shall be done by the System Integrator.

1. Each and every system, subsystem, automated device, and package

equipment shall be fully automated to the extent possible and as defined in this and other sections.

2. Each system shall have graphical screens displaying the process, alarms, setpoints, trends and other controls.

B. The SCADA system configuration shall be completed in parallel with PLC programming and tested during factory and field testing.

3.03 SCADA CONFIGURATION

A. General

1. The SCADA application software shall allow Operators to interface with any controlling devices; to display process data, equipment status, and alarm information. The system shall transfer operator initiated control commands to the controlling PLC(s).

2. The Programmable Logic Controller(s) within the system shall perform all process control. The SCADA system shall not perform any control or function that would, on its own, change the way a controlling device (PLC or dedicated controller) controls the process. All commands must be initiated by an Operator and not be the programming of the SCADA system. All Timers, Totalizers, Counters, or any other control function devices will be implemented in the PLC.

B. Communications

1. The SCADA shall monitor for communications and shall post an alarm if a PLC fails to respond to message queries.

2. The SCADA system shall track a ratio of completed message to missed messages in a 100 entry shift register. Therefore, the communications integrity to each station will be displayed as a percentage of completed messages. Show message integrity percentage on SCADA overview screen.

3. The SCADA system shall re-transmit interlock data from one PLC/RTU to another for the purposes as described in this section and Section 16915, PLC &OI Applications Programming.

C. Graphic Screens:

1. Model screens after the P&IDs as shown in the contract drawings. If existing sites are similar, the new screens shall be similar in look and functionality as the existing screens.

2. Display all analog values on the graphic screens with bar graph, symbols, and analog readout along with its associated alarm setpoints arranged next to bargraph in ascending order (i.e. low alarm setpoints at bottom and high alarm setpoints near the top).

3. Graphic screen(s) shall display station main parameters in process flow format similar to that shown on the P&ID diagrams.

4. Setup control parameter screen listing all setpoint registers. All settable values shall be changeable from the graphic screens permitted with the appropriate password.

5. Provide an alarm summary screen(s) listing all alarms. Flashing Alarm Indication. Acknowledge button to acknowledge alarms displayed.

6. All values shall be displayed with engineering units.

7. Analog values shall be displayed with the resolution as described above.

8. Display indicating a new alarm regardless of the screen currently displayed.

9. Menu screen with jump buttons to all screens.

10. Jump button displayed on all screens to go to a menu screen.

11. Jump button displayed on all screens to go to the last screen.

12. Provide the following graphic screens:

    a. Overviews of station/project refer to P&ID drawings – one per P&ID (minimum).
    b. Setpoint "pop-up" menus for each device to configure alarms.
    c. Control screen to allow configuration of operation per the control strategies.
    d. Alarm configuration screen with setpoint listings and descriptions.
    e. Totalization (flow and/or runtime) for all devices.
    f. Trending screens for each analog device.
    g. Alarm summary screens with acknowledge and reset.
    h. Modifications to existing overview screen as applicable. (large overview showing multiple related stations and/or systems).
    i. Configure drop down menus and "go-to" buttons for each new screen.

3.04 TESTING

A. The SCADA system shall be tested with the PLC control systems as defined in

other sections. The SCADA system shall be ready for testing at the Factory Test and again at the Field Test. The SCADA application programmer shall be performing testing, making corrections and/or on stand-by during all testing. There shall be no time limit to perform such testing and completion will be as determined by the Owner's Representative.

B. Provide testing as specified in Section 16600 – FACTORY AND FIELD TESTING.

3.05 ADDITIONAL PROGRAMMER LABOR HOURS

A. The Contractor shall include in his bid price an additional 16 hours of SCADA application program configuration changes to be designated by the Owner's Representative or Owner during testing and start-up.

B. All SCADA application programming configuration changes shall be performed by the original programmer and shall be made in the presence of the Owner's Representative in the field. None of the hours shall be used for travel costs, overhead, etc., that are not related to programming changes.

3.06 MEDIUM

A. Provide SCADA applications programs on CD recordable disk media with each submittal. Clearly label CD with station name and contents. CD disk shall contain the following:

1. Tag name data tables.
2. Colored graphic screens.
3. These disks and all copyrights shall become the property of the Owner, for its use on this and future projects.

B. In addition, one (2) sets of CD-ROM diskettes of the application SCADA programs shall remain on site. All programs on the disks shall be updated each time the Contractor is called out to modify the programs.

C. Provide two (2) copies of as-installed SCADA application screens and tag name data tables printed with standard laser print 8 1/2" x 11" paper at end of project. Insert new print-outs into the Operations and Maintenance manuals. Provide number of copies as specified in 16010 Operations and Maintenance Instructions.

3.07 TRAINING

A. The SCADA programmer shall provide a minimum of 4 hours of training for 4 to 6 of the Owner's engineering, operations, and maintenance personnel. The training shall consist of the following minimum sessions:

1. 2 hours – SCADA Configuration and Maintenance Course shall include:

a. Training in entering configuration mode and creating symbols, assigning references, editing tag database.
b. Making data back-ups and creating a back-up schedule.
c. Making SCADA configuration back-ups.

2. 2 hours – SCADA Operations Course shall include:

a. Screen usage.
b. Password heirarchary.
c. Dos and Don’ts.
d. Reports and file management.

3.08 WARRANTY

A. Troubleshoot and correct all program abnormalities, glitches and bugs uncovered during the warranty period. Provide phone and/or on-site support as required to correct problem(s).

B. Software support which shall be provided by the System Integrator:

1. Free technical SCADA software and hardware configuration phone support for a period of one year. SCADA phone support shall be provided directly from the person(s) that configured the SCADA System. Phone support shall be available between 8 a.m. and 4 p.m. Pacific Standard Time Monday through Friday.

2. The System Integrator shall correct any SCADA software configuration error that is discovered within the warranty period, at no additional cost to Owner.

-END OF SECTION-

SECTION 16940 - INSTRUMENTATION

PART 1: GENERAL

1.01 SCOPE OF WORK

A. The major components in the instrumentation scope of work are:

1. Furnish, configure, test, commission, and warrant instrumentation as shown in the P&IDs, plans, and/or listed in the instrument schedule (located at the end of this section.)

2. Include necessary piping, valves, pressure reducers, mounting brackets or flanges, supports, and anchors to complete installation.

3. Provide sunshades for instrumentation for all instruments that are exposed to direct sunlight.

B. System Integrator selection of instrumentation shall be per manufacturer's recommendation for the application and per specifications. If a manufacturer's recommendation or installation instructions are inconsistent with the Contract installation details or specifications, then the Contractor shall inform the Engineer of the discrepancy in writing within the submittal comment letter. If the inconsistency is due to substitution from the first named equipment, then the responsibility of coordination and any additional cost shall be borne by the Contractor.

C. Provide all devices, valves, tubing, fittings, wiring, terminal blocks, calibration consumables, initial calibration equipment, accessories, sunshades and enclosures as specified herein and as shown on Contract Drawings.

D. The Contractor shall furnish all tools, calibration equipment, calibration materials, specialized parts and incidentals necessary to integrate the instrument to the application.

E. Contractor shall furnish labor for installation, verification, start-up, calibration, testing and commissioning. Contractor shall prove proper function of instrument prior project completion.

1.02 RELATED SECTIONS

A. Section 16010 – Electrical

B. Section 16110 -- Conduit, Devices, Boxes and Grounding

C. Section 16120 -- Wire, Fuses and Terminal Blocks

D. Section 16600 – Factory and Field Testing

1.03 SUBMITTALS AND DRAWINGS

A. Submit shop documents and drawings for approval in accordance with this subsection and as specified in Electrical Section 16010 – Submittal and Drawing Requirements.

B. Submit Operating Instructions (O&M Manuals) for each instrumentation device prior to equipment installation.

PART 2: PRODUCTS

2.01 QUALITY

A. Per 16010 – Electrical - Quality

B. All equipment shall be designed and constructed so that in the event of a power interruption, the equipment specified hereunder shall resume normal operation without requiring a manual reset.

C. Signal transmission from remote or field electric and electronic devices shall be 4-20 mA, sourced by a 24 VDC supply internal to the instrument or from a 24 VDC power supply located within the panel that is to receive the signal. Nonstandard transmission methods such as impulse duration, pulse rate, and voltage regulated will not be permitted except where specifically noted.

D. Transmitters or devices located in Class 1, Division 1 hazardous areas shall be rated for hazardous location installations per NEC and UL. Explosion proof enclosures and raceways or current/spark limiting devices located inside or outside of the classified area shall be furnished to comply with code requirements.

E. Outputs of equipment that are not of the standard signals as outlined, shall have the output immediately converted to 4-20 mA signals for remote transmission.

2.02 INSTRUMENT IDENTIFICATION

A. All major instrumentation and equipment items or systems specified in this Division are and/or on the P&IDs are identified by tag numbers. Tag field equipment with assigned instrumentation tag number and functional description.

1. Tags shall be 1/2” stainless steel DYMO impressed tape with 3/16”(minimum) height characters.

2. Metal tape embosser shall feature a built in hole punching device and scissor cutoff tool. DYMO 1101 or equal.

B. Attach tags to equipment with a 4” long, 20-gage stainless steel wire leash for small devices, or two stainless steel screws for larger instruments; however, such permanent attachment shall not be on an ordinarily replaceable part or in an area that will be subject to unintended overuse fatigue. Make the tag plainly visible

2.03 LEVEL COMPONENTS

A. SUBMERSIBLE LEVEL TRANSMITTER

1. The submersible level transmitter shall be 4-20 mA loop powered with integral manufacturer’s cable containing electrical conductors and breather tube. The transmitter shall include lightning protection and a dessicant air dryer for installation on the end of the breather tube.

2. Lightning protection

   a. Lightning protection shall be incorporated within the level transmitter and shall be consistent with IEC 61000-4-5, Level 4 requirements.

   b. Lighting protection module shall be installed in termination box and grounded per manufacturers instructions.

3. The calibration of the level transmitter and cable length shall be as shown in the instrument schedule.

4. The body of the transmitter shall be rated IP68 and constructed of stainless steel with a ceramic diaphragm measuring cell. The transmitter shall be suspended from the electrical cable.

5. The submersible level probe shall be Endress and Hauser FMX-167 Water Pilot, Druck Model 1830 with STE-110 termination box, or approved equal.

B. ULTRASONIC LEVEL TRANSMITTER

1. The ultrasonic level transmitter shall utilize non-contacting ultrasonic signal reflection technology to provide level monitoring for up to 50 ft range.

2. The transmitter shall feature advanced echo processing algorithms that can be configured to ignore selected echos.

3. The transmitter shall be capable of controlling two pumps in a lead/lag configuration or using outputs for high and low level alarm outputs.

4. The transducer level element (LE) shall have the following features:

a. Corrosion resistant plastic body, completely submergence rated.
b. Rated for Class 1, Div. 2 hazardous atmospheres.
c. Operating temperature of -40 to 200 deg F.
d. 6 degree beam angle.

5. The level indicating transmitter shall have the following features:

a. NEMA 4X / IP65 enclosure.
b. Ground isolated 4-20 mA output, max load of 750 ohm.
c. Two 5 amp at 120V AC, SPDT relays.
d. Integral 4 button keypad for configuring parameters.
e. Integral 1.5” x 4” (min) backlit LCD display.
f. Operating temperature range from -40 to 140 deg. F.

6. The calibration of the level transmitter and cable length shall be as shown in the instrument schedule.

7. The ultrasonic level transmitter shall be Siemens Hydroranger 100 with chemical resistant level sensor or approved equal.

2.04 PRESSURE COMPONENTS

A. GUAGE OR DIFFERENTIAL PRESSURE TRANSMITTER

1. The pressure indicating transmitter shall be a loop powered, two wire, 4-20 mA signal transmitting device with signal derived from the applied sensor pressure. Transmitter shall be capable of driving 0 to 500 ohm loads with 24 VDC supply.

2. The transmitter shall have the following features:

a. Programmable 4-digit Liquid Crystal Display (LCD) process indicator.

b. HART programming with programming selections for square root extraction, output calibration, and adjustable dampening 0.0 to 36.0 seconds, minimum.

c. Integral microprocessor based circuitry with RFI filtering and shielding.

d. The transmitter shall have accuracy of +/- 0.1% of span over a range of 10 to 1 turndown. Elevated zero setting capable of 0-30% upper calibration limit.

e. Operating temperature range shall be -40 to 185°F (minimum). Process wetted materials shall be ceramic or hastalloy diaphragm

and 316 stainless steel body. Process flanges shall be 316 stainless steel, 1/2" NPT.

f. The transmitter shall be scaled as shown in the instrument schedule.

3. Provide mounting bracket per mounting requirements shown in Contract drawings.

4. The gauge pressure transmitter shall be Rosemount Smart 3051TG series, Endress and Hauser Cerabar M PMC 41or approved equal.

B. CALIBRATION VALVE

1. Calibration valve for use with gauge transmitters shall have the following features:

a. Stainless steel body with integral blocking valve and calibration valve and port.

b. Calibration port shall be 1/4” FNPT with 1/4” MNPT x 1/2” FNPT adapter.

c. Valve shall have a non-rotating stem tip and a fully backseated bonnet.

d. Process and transmitter connections shall be 1/2” MNPT. Include 1/2” stainless steel close nipple as required.

2. Calibration valve shall be Rosemount 306RT2, or approved equal.

C. PRESSURE SWITCH

1. Each pressure switch shall be SPDT rated minimum of 15 amps @ 120VAC. Pressure switch shall consist of a pressure sensing mechanism and the switch itself enclosed in a NEMA rated housing. Pressure switch shall be bourdon tube type or diaphragm type with stainless steel wetted parts and mechanical snap action switch. Switch shall have two setpoint adjustments (trip & reset setpoints) with setpoint indicator calibrated in engineering units and viewable from outside switch cover. Pressure switch shall be UL listed. The pressure switch shall be Dwyer Mercoid DAW series; Square “D” 9016, ASCO or approved equal.

D. PRESSURE GAUGE

1. The pressure gauge shall be 1% accurate with C-type bourdon tube. The bourdon tube, socket and connection tube of the gauge shall be 316

stainless steel. The case and bezel ring shall be constructed of type 304 stainless steel. The dial shall be 100 mm in diameter with a black pointer and a white gauge face with black print. The gauge shall be filled with liquid glycerin. A bottom mount process connection shall include a snubber as a separate component. The process connection shall be1/2" stainless steel. The pressure gauge shall be Ametek/US gauge model 656 or approved equal.

2.05 FLOW COMPONENTS

A. MAGNETIC FLOW METER

1. The magnetic flow meter shall consist of a flow tube FE and a converter FIT, complete with interconnecting cables.

2. The magnetic flow meter shall be of the low frequency electromagnetic induction type and shall produce a DC pulse signal directly proportional and linear to the flow rate, with the duration not less than 100 milliseconds. The meter shall be suitable for full scale flow rates from 1 to 31 feet per second. Complete zero stability shall be an inherent characteristic of the metering system. Meters requiring field zero adjustment will not be acceptable. The meter accuracy shall not be affected by changes in fluid pressure, temperature, viscosity, or conductivity.

3. Accuracy

   a. The maximum error of the complete metering system including flow element and flow indicating transmitter shall be 0.25% of actual flowrate and readout over the range of full scale settings from 1 to 30 feet per second. Variations in temperature, voltage, and frequency within the ranges listed herein shall not affect the overall measuring accuracy.

   b. Readout repeatability shall maximum error of 0.1% of average for all flow rates over the range of full scale settings from 1 to 30 feet per second.

   c. The flow meter shall not require more than three diameters of straight pipe length from the center of the meter to upstream or downstream obstructions to obtain specified accuracies.

   d. Lack of straight pipe or obstructions to straight length pipe requirements shall not cause overall flowmeter inaccuracies to exceed more 0.5% of actual flowrate over the range of full scale settings from 1 to 30 feet per second.

4. Flow Element (FE)

a. The flow element shall be based on a pipe spool with ANSI class 150 flange connections or be flangeless construction as required by mechanical drawings. Class 300 flanges shall be provided where shown or when the pressure and temperature of the process fluid exceeds the rating of a 150 lb flange. The flow element size shall be as shown in the mechanical drawings and listed in the Instrumentation Schedule. Flange type and bolt pattern shall be coordinated with the mechanical Contractor prior to submittal.

b. The flow element shall have 316 stainless steel electrodes, flush configuration.

c. Stainless steel grounding rings shall be provided at both ends of the flow element for all flowmeter applications. Grounding rings shall be manufactured from stainless steel, 2 mm thickness with grounding tab for electrical wire connection, and fit within the flange bolt circle. Grounding ring shall be self centering within pipe.

d. The flow element internal liner material shall be Teflon, polyurethane or hard rubber, unless recommended otherwise by the manufacturer for the application and approved by the Engineer.

e. Nema rating as defined in the Instrumentation Schedule.

5. Flow Indicating Transmitter (FIT)

a. The electronic flow indicating transmitter shall be mounted remotely from flow tube as shown on Contract drawings.

b. The electronic transmitter shall be provided in a NEMA rated enclosure per the Instrumentation Schedule.

c. The transmitter shall be interchangeable with all sizes of flow elements and shall be field replaceable (without replacing flow element) in the event of transmitter failure.

d. The transmitter shall be microprocessor controlled, utilizing digital signal processing with automatic zero correction to provide a linear 4-20 mA signal proportional to flow rate.

e. The transmitter shall incorporate a high impedance amplifier of 100,000 Megohms or greater, eliminating the need for electrode cleaning systems.

f. The transmitter shall contain a self test mode to allow the operator to manually simulate the output 4-20 mA signal to any value between 0% and 100% to check out any driven devices in the loop.

g. Rate indicator and totalizer: An alphanumeric LCD backlit display shall be provided to continuously display the flowrate and totalizer with units and all programming functions.

h. All programming configuration of the Flowmeter shall be completed through the transmitter's pushbutton interface. A communication device shall not be necessary to configure the flow transmitter.

i. The transmitter shall be designed for operation from a power source of 120 volts AC, with a power consumption of less than 30 watts. The flow element shall be powered from the transmitter.

j. The transmitter shall operate continuously without fault in an ambient temperature range from 14 to 140 °F. The flowmeter shall be suitable for operation in direct sunlight without the use of a sunshade. If a sunshade becomes required after installation for any operational reason, one shall be furnished and installed free of charge.

k. The following configurable parameters shall be provided at a minimum:

1) Field adjustable flow signal dampening.

2) Low flow cutoff (forces zero flow signal) between 0.0-5.0% of full scale rate.

3) Empty pipe detection (forces zero flow signal) if the pipe is not full.

4) Selection for forward/reverse/both flow directions.

6. Flow Indicating Transmitter (FIT) I/O Interface

a. Flow Signal: 4-20 mA signal proportional to the flow. The signal shall be field configurable for the flow calibration specified and others within the flow tube accuracy range. The flow signal shall be capable of measurement for forward and reverse flows combined by offsetting zero to mid scale (12 mA).

b. Flow Totalization Pulse: The Flowmeter shall feature a pulse output that is scaled to 1000 gallons per pulse unless otherwise

shown.

1) Provide solid state interfacing relay within control panel (as required) between flow meter voltage output and PLC discrete voltage input. Provide any necessary interfacing devices to make flow meter pulse duration and output rate compatible with PLC discrete pulse input rate.

c. Meter Positive Zero Return: This contact input shall force the flow reading and output flow signal to zero flow.

7. If the flow indicating transmitter (FIT) is shown in the Contract drawings to be mounted remotely from the flow element (FE), the manufacturer shall provide all cabling between flow element and flow indicating transmitter.

8. All mounting hardware and/or devices necessary to complete the installation shall be provided by the manufacturer at no additional cost to the Owner.

9. The meter shall be hydraulically calibrated at a facility located in the United States and the calibration shall be traceable to the National Bureau of Standards. A certified copy of the calibration test results shall be submitted to the Owner prior to shipment of the meter.

10. The magnetic flowmeter shall be McCrometer UltraMag, no equal.

B. FLOW SWITCH

1. The flow switch shall be vane operated to actuate 10A, SPDT snap action switch. Motion of the vane shall actuate the switch by action of a magnet linked to the switch inside the sealed stainless steel switch body. Flow switch shall be W.E. Anderson V6, or approved equal.

2.06 ANALYTICAL ELEMENTS

A. CHLORINE RESIDUAL ANALYZER

1. Description: The system's chlorine sensor shall employ the amperometric measurement technique to monitor a continuous flow of process water to determine free chlorine residual level.

2. The microprocessor based analyzer shall continuously display the chlorine residual with range as shown on the Instrumentation Schedule.

3. The measuring cell shall provide continuous on-line measurement of residual levels from 0-50 mg/l with minimum 100 to 1 turndown of scale

maximum. The display shall be capable of 0.01 mg/l resolution (min) for the lower scale ranges.

4. The analyzer shall have the capability of on-site conversion from free to total residual chlorine analysis by simple change or addition of reagent.

5. Operating temperature: 32° F to +120° F. Provide sunshade when exposed to direct sunlight.

6. Analyzer shall utilize DPD, or 5% white vinegar as buffer solution for measuring CL2 residual. Automatic temperatures compensation shall be included as standard.

7. Analyzer Electronics.

   a. The analyzer shall be controlled by microprocessor based electronics powered from 120 VAC. Analyzer shall be protected from voltage fluctuations commonly found in water/wastewater applications. Additional external noise filtering shall be provided as necessary for a robust and operational system. System lock-ups or microprocessor malfunctions will be grounds for rejection throughout the warranty period.

8. Flow System:

   a. A continuous sample shall be delivered to the analyzer. If sample is interrupted, the piping system shall be designed to maintain a wet electrode and/or cell.

   b. A flushing type Y-strainer and throttling valve shall be provided in the sample line:

      1) The Y-strainer shall divide the sample in to two (2) streams.

      2) The larger stream shall continuously flush the strainer element.

      3) The smaller stream shall flow to the analyzer.

   c. Analyzer Electronics.

      1) The analyzer shall be controlled by microprocessor based electronics.

      2) User interface shall include a touch keypad and LED display, 0.56” digit size (min).

3) Alarm conditions shall be annunciated through the display.

4) The system shall have one isolated 4-20 mA output which represents chlorine residual and scaled by the user during commissioning from a selected list of ranges from 0-0.1 to 0-50 mg/l. Output signal shall be configurable to desired span without recalibration of the sensor

5) Two (2) user configurable alarm relays shall be provided for low residual, high residual.

d. Relay contacts shall be rated 5 amperes at 110 V.

9. Spare Parts.

a. One year supply of consumable materials as recommended by manufacturer.

b. On spare electrode, complete unit with plug-in to transmitter.

10. Acceptable manufacturer: Hach CL17, GLI Accu-Chlor, or approved equal.

2.07 TEMPERATURE DEVICES

A. ROOM TEMPERATURE TRANSMITTER

1. The temperature indicating transmitter shall provide display of room temperature and provide linear output signal derived from the temperature of the integral RTD measuring sensor.

2. Temperature Transmitter

a. Loop powered, two wire, 4-20 mA, capable of driving 0 to 500 ohm loads from 24 VDC supply.

b. 3-1/2 digit, 0.37”H, Light Emitting Diode (LED) display.

c. Zero and span adjustments for display and temperature transmitter.

d. The transmitter shall have accuracy of +/- 0.5% of span over an operating temperature range of 0 to 150°F.

3. The wall mount transmitter shall be Devar Model RTTI or approved equal.

2.08 EVENT, STATE OR POSITION DEVICES

A. POSITION SWITCH

1. Door switch – door intrusion switch shall have a wide gap magnetic sensor with S.P.D.T. contacts mounted in a rugged steel housing with integral 3 foot stainless steel armored cable for wiring to a junction box. Intrusion door switches shall be Sentrol 2507-A or approved equal.

B. SMOKE DETECTOR

1. General

a. The smoke detector shall detect smoke produced by fire and signal an alarm system. The detector shall be housed in a flame retardant plastic housing and shall be unaffected by vibration. Detector shall be sealed against dirt, insects and back pressure

b. Detector shall utilize photoelectronic sensor technology.

c. The detector/base shall be 120V, four-wire operation with built-in Form A and Form C dry contacts. Form A contact shall be rated for 2.0A at 30VAC/DC. Form C contact shall be rated for 2.0A at 30VAC/DC and 1.0A at 120VAC.

d. The detector shall have an operating temperature 32 to 120°F and an operating humidity of 10 to 93% relative humidity.

e. The detector shall have built-in test switch (magnetic proximity actuation) and 360 degree view angle of built-in alarm LEDs.

f. The detector shall be approved by UL and Factory Mutual and meet requirements of NFPA 72.

2. The fire alarm smoke detector shall be photoelectric type. The smoke detector shall be System Sensor 100 Series model 2151 with B114LP base, Gentex 8000 Series with 120VAC base, or approved equal.

2.09 INSTRUMENTATION SUN PROTECTION

A. Instrument Sunshade

1. Provide wall mount bracket or pole mounted sunshade where instruments are exposed to direct sunlight. Sunshades shall be fabricated from stainless steel with hinged rubber flap on front for viewing of displays and performing calibrations. Sunshade shall be custom manufactured for the instrument protected and sized such that there is 3” free space around sides and front of instrument.

2.10 INSTRUMENTATION SCHEDULE

A. The Instrumentation Schedule spreadsheet (located at the end of this section) is intended to be a summary of instrumentation equipment required for this project. Not all instrumentation details are shown on the schedule. Some requirements may be shown in the instrumentation schedule such as enclosure rating and instrument span that are not described in the specifications. Both are required for a complete specification.

B. If an instrument is shown in the P&IDs or on the site plan, then the device shall be provided whether or not it is shown on the instrumentation schedule.

PART 3: EXECUTION

3.01 WORKMANSHIP

A. Instrumentation work shall conform to workmanship standards specified in Section 16010 - Electrical.

B. The Contractor shall employ personnel who are skilled and experienced in the installation and connection of equipment defined in this section. Contractor qualifications are specified in Section 16010.

C. Verify that all equipment and materials fit properly.

D. All instrumentation configuration, programming and calibration shall be completed prior to the start of field tests.

E. Equipment without approved submittals shall not be installed.

F. All equipment shall be properly stored indoors while awaiting installation. Protect installed equipment from construction debris or mishaps. The Contractor will replace any equipment that is not in new condition at the time of installation and/or start-up.

G. Perform work to remedy non-compliant installations after inspection.

3.02 INSTALLATION

A. Install and supply all products necessary to provide an operational instrumentation system. This shall include the following:

1. Contract Drawings are intended to show the basic functional requirements of the instrumentation system. Insufficient detail does not relieve the Contractor from the responsibility to provide a complete and functioning system. If additional detail or clarification is required, the Contractor shall request such information from the Engineer prior to installation.

2. Provide relays, signal converters, isolators, boosters, power conditioners, circuit cards, and other miscellaneous devices as required for the compatible and functional interface.

3. Provide analog loop isolators where required to eliminate "ground loops."

4. The instrumentation and accessory equipment shall be installed in accordance with the manufacturer's instructions and located as shown on the Drawings or as approved by the Engineer. When manufacturer's installation literature specifies a particular location or orientation in a process line due to measurement accuracy considerations, the installation shall be in conformance with the manufacturer's instructions.

B. Instrument installation methods.

1. Install instruments at the location shown on the Plans or approved by the Engineer. Instruments enclosures shall be NEMA rated for the installed location.

2. Install level and plumb.

3. All instruments shall be provided with floor stands or wall brackets as shown in installation details or as required for functional installation.

4. Mounting stands shall be custom manufactured of aluminum channel with base plate unless otherwise noted in installation detail.

5. Mounting channels (unistrut), and spacers shall be galvanized steel above ground outdoors and stainless steel below ground (wetwell), unless otherwise noted in installation details.

6. All screws, bolts and anchors shall be stainless steel.

C. Wiring and raceway installation methods.

1. Terminal blocks shall be provided at all instrument cable junctions and all wires shall be identified at such junctions.

2. Instrumentation wiring shall be run without splices between instruments, terminal boxes, or panels.

D. Wiring, grounding, and shielding methods.

E. The following practices shall be observed unless modified by manufacturer's standards:

1. Each electronic equipment chassis shall be grounded to power ground.

2. Shielded twisted pair, shielded triad, or manufacturer supplied cables only shall be used for analog signals and communications signals.

3. Drain wire of shielded cables used for analog inputs to the PLC shall be connected at the PLC unit only. Shield shall be isolated from ground at all other termination points including transmitters.

4. Drain wire of shielded cables used for analog outputs from the PLC shall be connected at signal receiving device only. Shield shall be isolated from ground at all other termination points.

5. If electrical interference noise is imposed on DC status and alarm signals, then they shall be re-routed or wire changed to shielded twisted pair cables.

6. Each shield drain wire which is not connected to ground shall be cut off covered with a heat shrink insulating boot at cable jacket end. Shields shall be connected together at each transition from one cable to another for an effectively continuous shield circuit.

3.03 SUPPLIER SERVICES

A. The Contractor shall be responsible for each supplier of equipment to provide the following minimum services for each type of instrument supplied. Each supplier shall provide a qualified instrumentation field technician to perform services listed herein. Contractor shall supply all calibration materials necessary to commission unit and shall not use any consumable materials that are intended to be furnished for the first period of use.

1. Advise and instruct Contractor on proper installation requirements.

2. Inspect, calibrate, test, and place equipment in operation.

3. All programmable devices shall be programmed and tested prior to startup. Programming shall be adjusted or changed as directed by the Owner or Engineer, at no additional cost.

4. Coordinate with the Owner and setup all alarm, process, and operation setpoints.

5. Perform all witnessed testing.

6. Visit the project site as often as required and spend as much time as necessary to ensure accurate and operational instrumentation.

7. Provide training as specified in Training.

B. The Contractor shall coordinate with each supplier of instrumentation to confirm that primary elements are provided in a timely manner, meeting critical path scheduling. The Contractor shall coordinate process connection size, equipment size, and material type when applicable and oversee the installation, calibration, and acceptance testing.

3.04 OPERATING AND MAINTENANCE INSTRUCTIONS

A. Provide operating instructions as specified in Section 16010 - Electrical, Operating and Maintenance Instructions.

3.05 TRAINING

A. The instrument supplier shall provide a minimum of one (1) hour of field training to instruct Owner personnel in the use, operation, calibration, programming, and maintenance on each type of "field" instrument listed in Instrumentation Schedule.

3.06 SPARE PARTS

A. Provide spare parts as described in each products section herein and specified in Section 16010 - Electrical, Spare Parts.

B. Contractor shall supply all calibration materials necessary to commission unit and shall not use any consumable materials that are intended to be handed over to the Owner as defined in the instrument specifications.

3.07 WARRANTY

A. Provide warranty as specified in Section 16010 - Electrical, Warranty.

3.08 FINAL ACCEPTANCE

A. Provide final acceptance as specified in Section 16010 - Electrical, Final Acceptance.

B. At the end of the project, following the completion of the field tests, and prior to final acceptance, the Supplier shall provide the following to the Owner:

C. Each "operation and maintenance" manual shall be modified or supplemented by the Supplier to reflect all field changes and as-built conditions.

-END OF SECTION-

16940 INSTRUMENTATION INDEX

DWG P&ID #	Tag No.	DESCRIPTION	Type	Specification Section	Min. NEMA Rating	Size	SP/ Range	Units	DWG. DET. Reference	Notes
E3	LT 51	Level Transmitter	SUB	16940-2.02 A	4X	-	0-300	FT	E13, Det G	300 FT Cable
E4	LIT 52	Level Transmitter	sonic	16940-2.03 B	4X	-	0-60	IN	E13, Det F	
E3	PIT 61	Pressure Indicating Transmitter	GAUGE	16940-2.04 A	4X	-	0-300	PSI	Civil Plans	Calibration Valve
E3	PI 61	Pressure Indictor	GAUGE	16940-2.04 D	4X	-	0-150	PSI	Pipe	Shutoff Valve
E3	PI 62	Pressure Indictor	GAUGE	16940-2.04 D	4X	-	0-150	PSI	Pipe	Shutoff Valve
E3	FIT 71	Flow Indicating Transmitter	MAG	16940-2.05 A	4X	-	0-3000	GPM	Stanchion	
E3	FE 71	Flow Element	MAG	16940-2.05 A	4X	12"	0-3000	GPM	E13, Det H	
E4	FSH 75	Flow Switch		16940-2.05 B		-			Civil Plans	
E3	AIT 81	Analytic Indicating Transmitter	Chlorine	16940 2.06 A	4X	-	-	-	Civil Plans	
E3	ZS 11 O,C	Position Switch		Valve spec		-	-	-	Valve	
E4	TT 91	Temperature Transmitter	digital	16940 2.07 A	1	-	0-150	deg F	Wall	
E4	ZS 93 A~D	Position Switch	N.C.	16940-2.08 A	1	-	-	-	Door	
E4	SS 98	Smoke Detector	Smoke	16940-2.08 B	12	-	-	-	Ceiling Box	

Storm Water Pollution Prevention Plan
for the
Sacramento Suburban Water District
Verner Avenue Well and Pumping Station

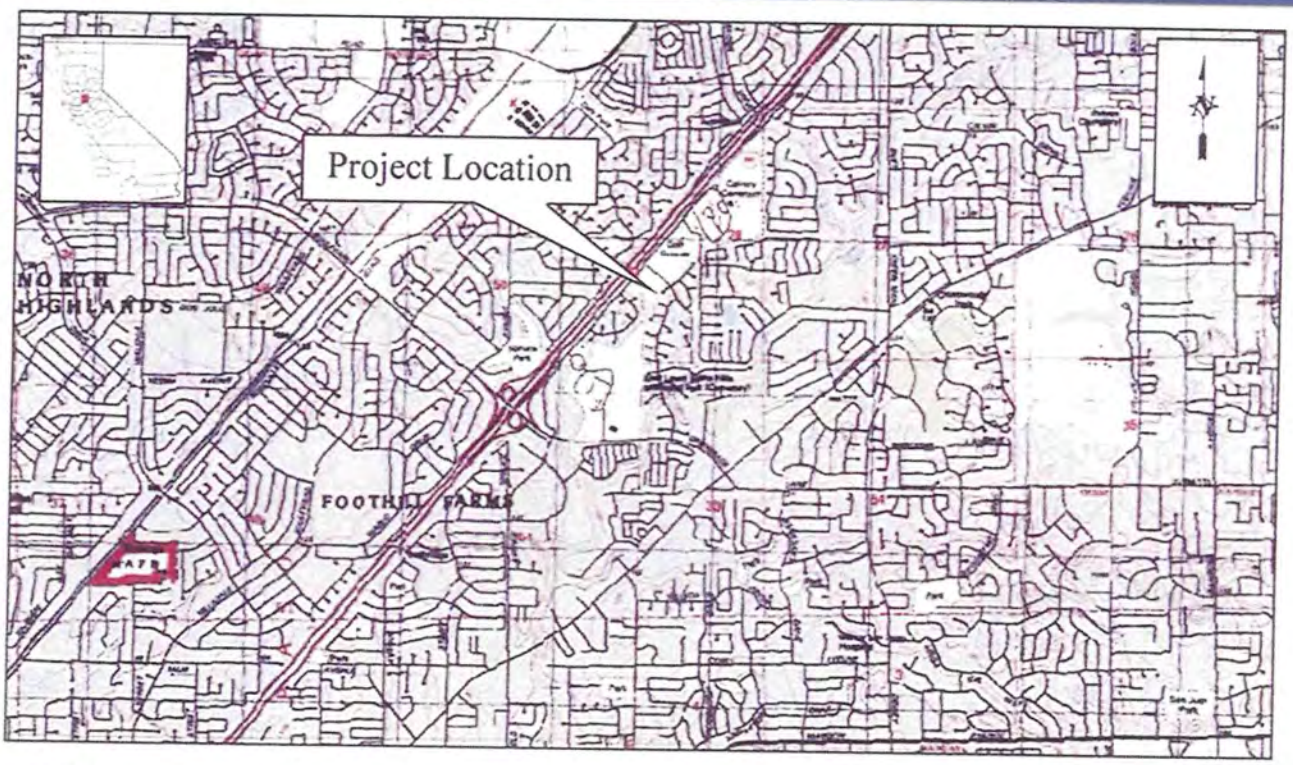

Prepared For

Sacramento Suburban Water District
3701 Marconi Avenue
Suite 100
Sacramento, CA 95821

Prepared By

Inland Ecosystems, Inc.
1000 Bible Way
Suite 16
Reno, NV 89502

May 2006

INLAND ECOSYSTEMS

TABLE OF CONTENTS

1.0 REGULATORY SETTING 1

2.0 PROJECT LOCATION AND DESCRIPTION 2
- 2.1 Project Location 2
- 2.2 Project Description 2

3.0 EROSION AND SEDIMENTATION CONTROL 7
- 3.1 General Erosion and Sedimentation Control 7
  - 3.1.1 Non-Storm Water Management 11
  - 3.1.2 Spill Prevention and Control 11
  - 3.1.3 Waste Management and Disposal 11
- 3.2 Inspection, Maintenance, and Repair 12
- 3.3 Post Construction Storm Water Management 13

4.0 SOURCE IDENTIFICATION 14
- 4.1 History of Toxic Materials On-Site 14
- 4.2 Control Practices for Material Delivery, Handling and Access Areas, and Storage 14
- 4.3 Equipment Storage and Maintenance 14
- 4.4 Pre-construction Control Practices 14

5.0 SAMPLING AND ANALYSIS 15
- 5.1 Testing for Discharges to 303(d) Listed Waterbodies 15
- 5.2 Non-Visually Detectable Pollutants 15
  - 5.2.1 Sample Locations 15
  - 5.2.2 Analysis Parameters and Quality Control 15
- 5.3 Data Evaluation 15
- 5.4 Training 16
- 5.5 Sampling Records 16

6.0 IMPLEMENTATION OF APPROVED LOCAL PLANS 16

7.0 PREPARER CERTIFICATION 16

List of Figures

Figure 1. Project location of the SSWD Verner Avenue Well and Pump Station Project within the City of Citrus Heights, Sacramento County, California. 4

Figure 2. Alternate A Site Plan for the Verner Avenue Well and Pumping Station. 5

Figure 3. Alternate B Site Plan for the Verner Avenue Well and Pumping Station. 6

Figure 4. Fiber roll installation detail. (See Appendix B)

Figure 5. Straw ball barrier installation detail. (See Appendix B)

Figure 6. Gravel bag berm and sand barrier installation detail. (See Appendix B)

Figure 7. Natural and synthetic matting installation detail. (See Appendix B)

List of Tables

Table 1. Estimated Surface Soil Disturbance for Construction of the SSWD Verner Avenue Well and Pumping Station. 7

Table 2. The SSWD's Best Management Practices (BMP) Monitoring Schedule. 13

List of Appendices

Appendix A: State Water Resources Control Board Fact Sheet for the General Construction Storm Water Permit

Appendix B: Best Management Practices (BMP) and Erosion Control Schematics and Installation Detail

Appendix C: Glossary of Select Water Quality Terminology

Appendix D: SSWD's Daily Inspection Report, List of Subcontractors, and Contractor/Subcontractor Certification

1.0 REGULATORY SETTING

In 1972, the Federal Water Pollution Control Act (also referred to as the Clean Water Act) was amended to provide that the discharge of pollutants leading to waters of the United States from any point source is unlawful unless the discharge is in compliance with a National Pollution Discharge Elimination System (NPDES) permit.

The California State Water Resources Control Board (SWRCB) has a statewide NPDES General Construction Storm Water Permit (See Appendix A) that applies to storm water discharges associated with construction activity including excavating, grading, and stockpiling that results in soil disturbances greater than one acre of total land area. The General Permit requires all dischargers to:

- develop and implement a Storm Water Pollution Prevention Plan (SWPPP) which specifies Best Management Practices (BMPs) that will prevent all construction pollutants from contacting storm water and with the intent of keeping all products of erosion from moving off site into receiving waters,
- eliminate or reduce non-storm water discharges to storm sewer systems and other waters of the nation, and
- perform inspections of all BMPs.

The Sacramento Suburban Water District (SSWD), a publicly-owned and operated water utility regulated by the State of California Department of Health Services and California Water Code, has filed a Notice of Intent to comply with the conditions of the General Permit. The SSWD has developed its SWPPP in accordance with Section A of the General Permit and includes:

- a project description specific to the site,
- descriptions of BMPs for erosion and sediment controls,
- BMPs for construction waste handling and disposal,
- post-construction erosion and sediment control requirements,
- non-storm water management, and
- implementation of approved local plans.

2.0 PROJECT LOCATION AND DESCRIPTION

2.1 Project Location

The project site is located on the USGS 7.5-minute Citrus Heights quadrangle within the western portion of the City of Citrus Heights, Sacramento County, and west of intersection of Verner Avenue and Flaming Arrow Drive (See Figure 1 and Photo 1).

2.2 Project Description

The major components of the Verner Avenue Well and Pumping Station are:

1. Constructing a 16-inch groundwater well capable of producing approximately 1,000 gpm.

2. Installing a 125 horsepower vertical turbine line-shaft well pump, powered by an electric motor.

3. Installing an 10-inch station piping with all meters, valves, and instrumentation.

4. Installing approximately 200 lineal feet of 12-inch underground pipeline to convey the water from the well to the SSWD's distribution piping located in Verner Avenue. The work will also include the open trenching and associated traffic control across Verner Avenue.

5. Installing approximately 200 lineal feet of 12-inch underground storm drain, overboard drain box, and connection to an existing Sacramento County owned storm drain.

6. Installing approximately 200 lineal feet of 6-inch underground sewer line, and connection to the County of Sacramento's existing sewer system.

7. Installing approximately 12,000 square feet of asphaltic pavement with associated grading and compaction.

8. Constructing an approximately 1,200 square foot split-face concrete building with metal roofing to house the well, well pump, station piping, motor control center, chemical treatment equipment for oxidation of the iron and manganese constituents, and chlorination for disinfection of the treated water.

9. Installing a motor control center, with pad-mounted utility transformer, controls, instrumentation, lighting and heating.

10. Installing a chain-link fence along the perimeter of the main paved area.

11. Installing landscaping and irrigation around the well site.

In addition to the above project components an iron/manganese removal filtration system may be required once the production well is drilled, tested, and water samples analyzed. If iron/manganese levels are within state drinking water limits than no removal filtration system would be needed as indicated in Figure 2 (i.e., Alternate A). However, if elevated levels of iron/manganese are detected a removal filtration system would be installed as indicated in Figure 3 (i.e., Alternate B).

The project time line, which includes the construction and testing of the well, will require approximately 18 months.

Photo 1. View looking east at the general location where the new well and pumping station will be located.

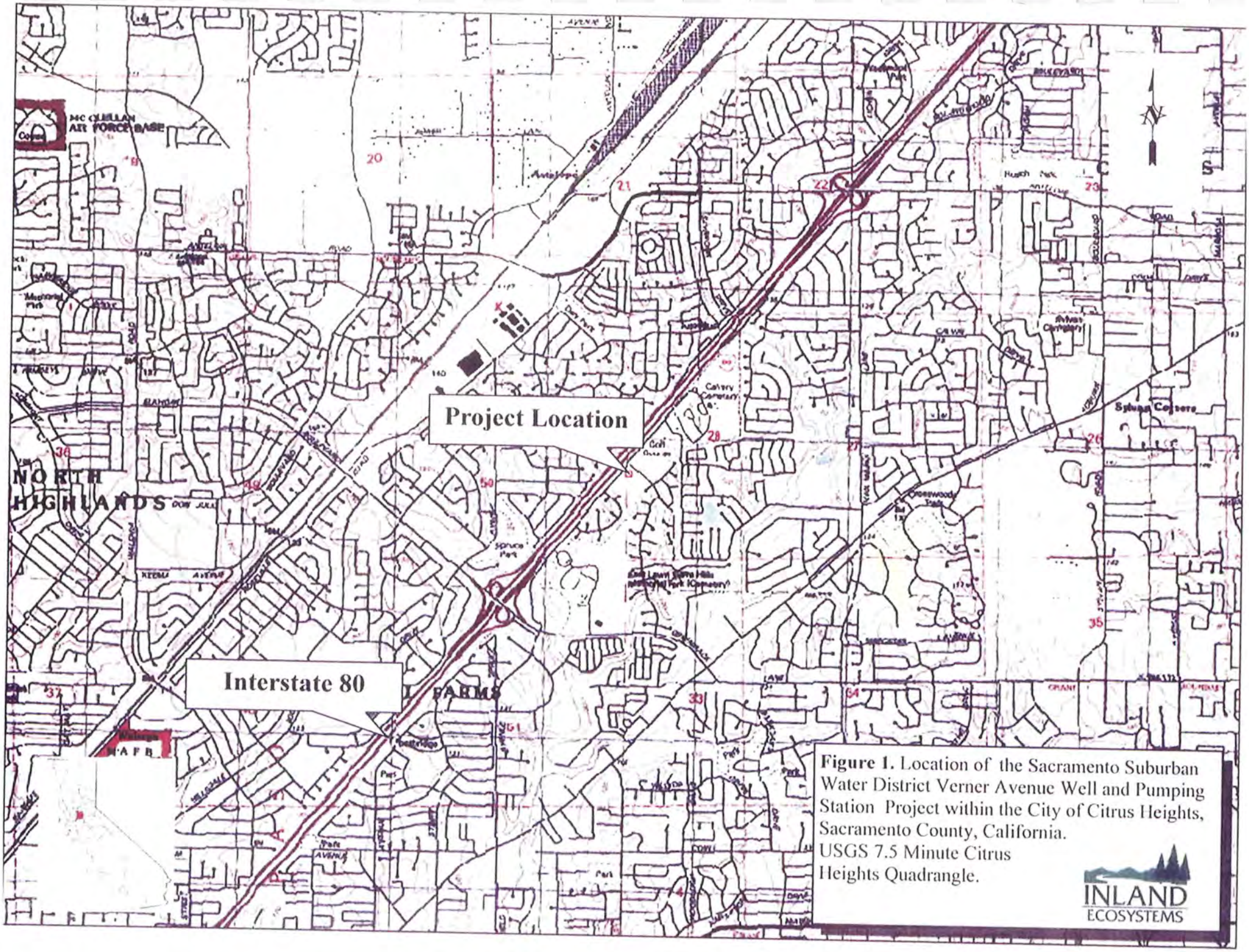

Figure 1. Location of the Sacramento Suburban Water District Verner Avenue Well and Pumping Station Project within the City of Citrus Heights, Sacramento County, California.
USGS 7.5 Minute Citrus Heights Quadrangle.

INLAND ECOSYSTEMS

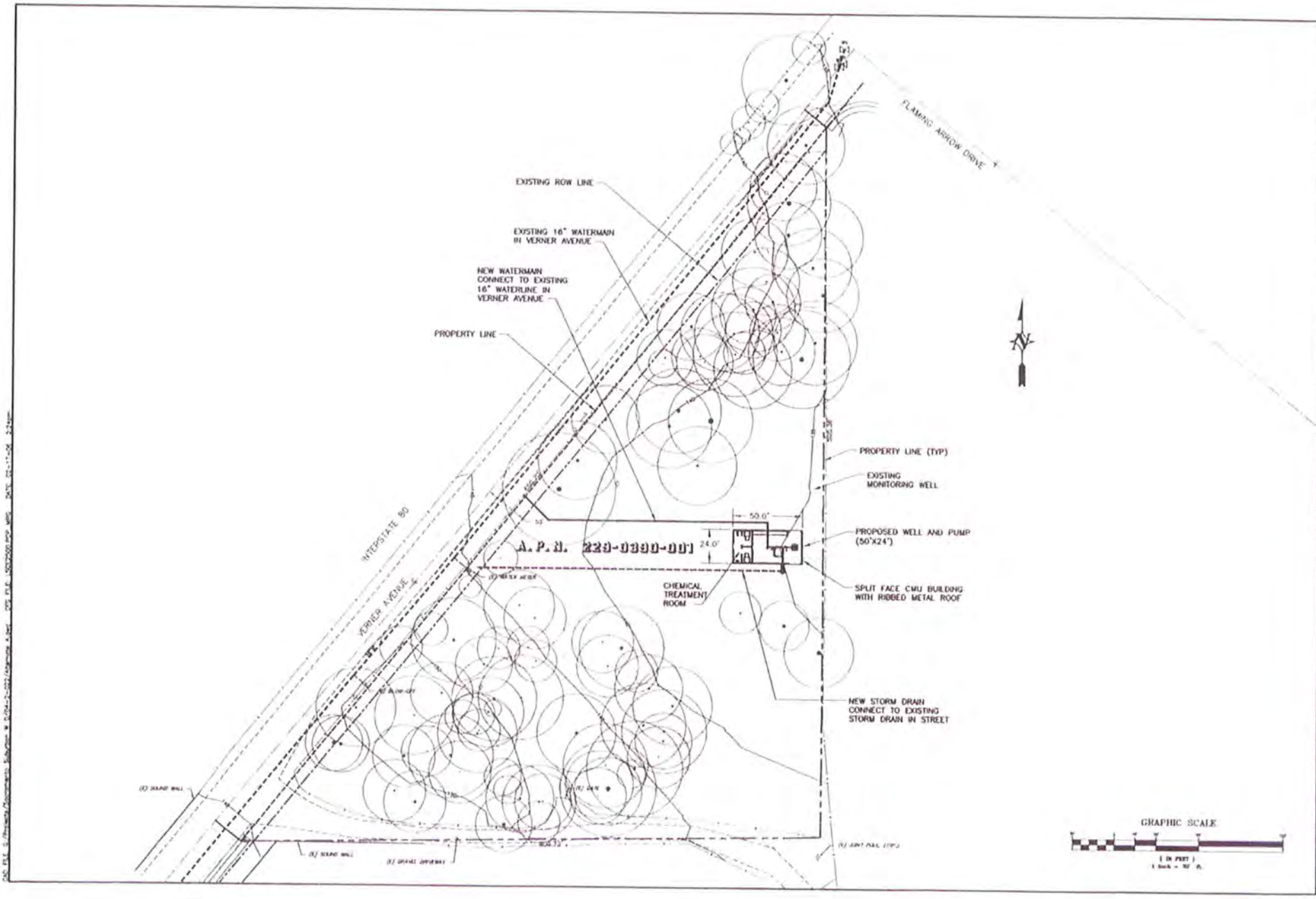

Site Plan-W/O Water Treatment

Verner Test Hole
Sacramento Suburban Water District
Sacramento, California

LUHDORFF & SCALMANINI
CONSULTING ENGINEERS

REVISIONS

NO	DATE	REVISION

DATE FEBRUARY 2006
JOB NO. 04-2-222
DESIGN BY: MAG
DRAWN BY: DMT
CHECKED BY: JCF
FILE SITE PLAN.DWG

ALTERNATE:
A

LEGEND

- NEW BACKWASH LINE–FROM IRON MANGANESE FILTERS TO BACKWASH SUMP
- NEW WATERLINE–FROM WELL TO IRON MANGANESE FILTERS FOR TREATMENT
- NEW WATERLINE–FROM IRON MANGANESE FILTERS TO DISTRIBUTATION SYSTEM IN VERNER AVENUE
- NEW STORM DRAIN FROM PUMP STATION DI TO NEW STORM DRAIN MANHOLE IN VERNER AVE.
- NEW SANITARY SEWER FROM BACKWASH SUMP TO NEW SANITARY SEWER MANHOLE IN VERNER AVENUE

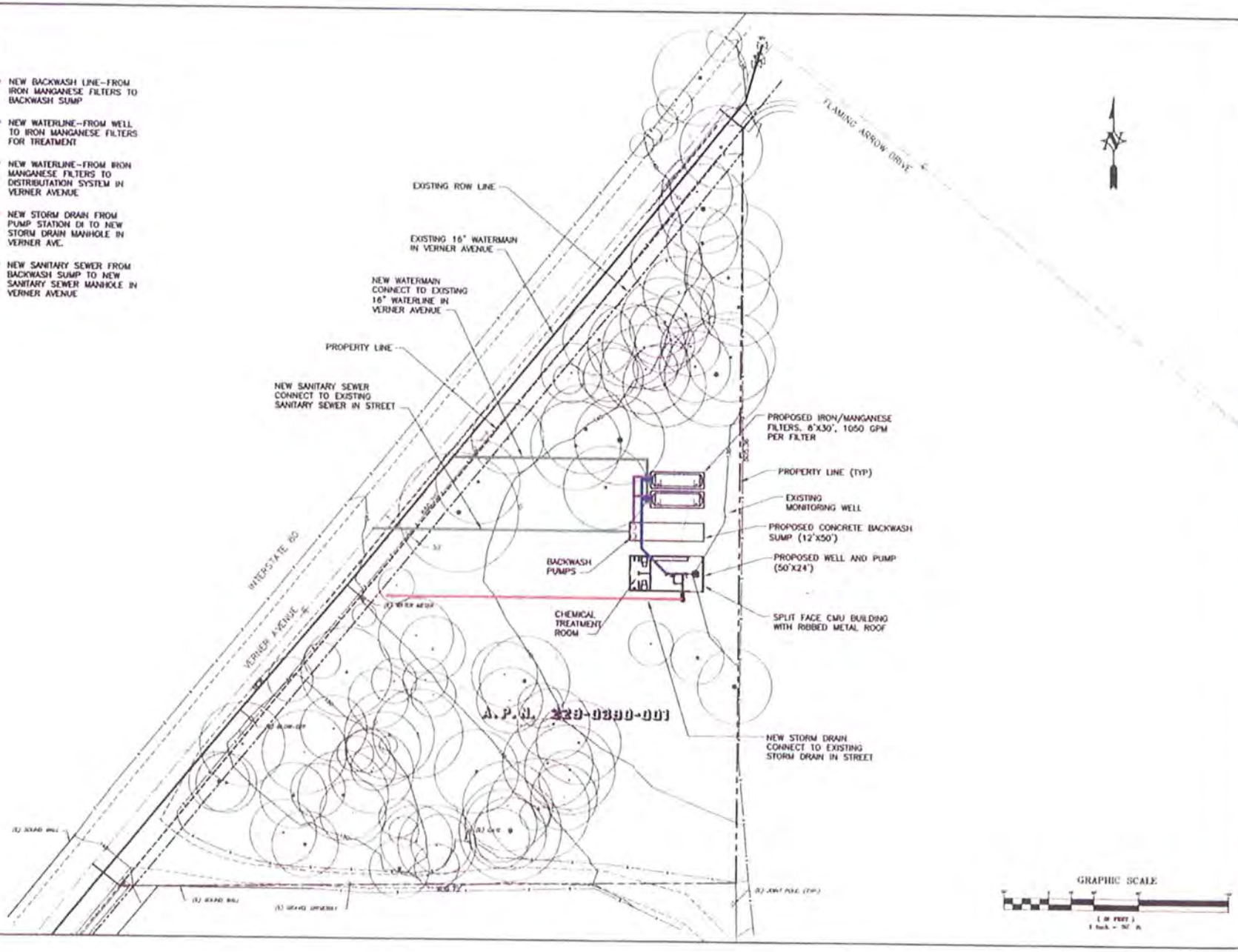

Site Plan–w/Iron Manganese Filters
Verner Test Hole
Sacramento Suburban Water District
Sacramento, California

LUHDORFF & SCALMANINI CONSULTING ENGINEERS

REVISIONS		
NO.	DATE	REVISION

DATE: FEBRUARY 2006
JOB NO: 04-2-022
DESIGN BY: WAC
DRAWN BY: DMT
CHECKED BY: JCF
FILE SITE PLAN DWG

ALTERNATE:
B

3.0 EROSION AND SEDIMENTATION CONTROL

The SSWD's goal for the Verner Avenue Well and Pumping Station is to effectively prevent sediment and other pollutant discharges from moving off site into any potential receiving water through a storm water system. Discharges of storm water from construction activities that causes or threatens to cause pollution, contamination, or nuisance are prohibited.

The objectives of this SWPPP are to identify the sources of sediment and other pollutants that could affect the quality of storm water discharges, and to describe and ensure the implementation of Best Management Practices (BMPs) to reduce or eliminate sediment and other pollutants in storm water and non-storm water discharges. Diagrammatic illustrations of select BMPs are provided in Appendix B. A Glossary of select SWPPP terminology is provided in Appendix C.

A summary of the surface area of soil disturbance for construction activities associated with this SWPPP is provided in Table 1. The SSWD will control pollutant discharges using the best available technology economically achievable (BAT) and best conventional pollutant control technology (BCT) to minimize effects of construction activities and associated discharges.

Table 1. Estimated Surface Area of Soil Disturbance for construction of the SSWD Verner Avenue Well and Pumping Station.

	Total Surface Area of Soil Disturbance (sq.ft.)
Well Development	10,000
Pipeline Installation	1,000
Storm Drain Installation	1,000
Sewer Installation	1,000
Asphalt Surface	12,000
Concrete Building	1,200
Landscaping and Irrigation	12,000
Fencing	5,000
Equipment Movement	2,000
Totals	45, 200 SF

3.1 General Erosion and Sedimentation Control Objectives

The erosion and sediment control objectives for this SWPPP are as follows and shall be complied with:

Objective 1: Control Erosion and Discharge of Sediment

- **Control Site Perimeter:** The construction site perimeters shall be delineated as needed with construction and silt fencing to prevent disturbing areas outside the project limits. Runoff from the project site must be free of excessive sediment and other constituents. Vehicle and equipment tracking at points of ingress and egress at the project site must be avoided.

- **Minimize Disturbed Areas:** The contractor shall only clear land which will be actively under construction and avoid clearing areas where site improvements are not scheduled. Preservation of existing vegetation is a primary defense for minimizing the potential for soil erosion.

- **Stabilize Disturbed Areas:** The contractor shall provide stabilization of disturbed soils whenever construction is complete. Contractors are required to provide immediate ground cover (e.g., mulch) on all exposed surfaces prior to the on-set of storm events. Mulch should be stockpiled on site and available for immediate use.

A pre-construction meeting will be held to inform all contractors of the contents and requirements of the SWPPP and review the procedures pertaining to construction activities and BMPs. Various BMPs may be needed at different times during construction and/or long term site maintenance depending on changing conditions. The selection and implementation of BMPs will depend on what needs to be protected. Contractors will be required to perform construction activities in a manner that keeps potential pollutants from being transported off-site. The SSWD or its representative will, as needed, discuss appropriate BMP procedures with contractors throughout the course of the construction period. The SSWD will have contractors and all subcontractors' complete documentation indicating that they have reviewed and understand all of the SWPPP requirements. A copy of the SSWD's List of Subcontractors, and Contractor/Subcontractor Certification is provided in Appendix D. The SWPPP will remain on site during construction, commencing with the initial mobilization and ending with the termination of coverage under the General Permit.

Grading and excavating will be temporarily suspended prior to and during storm events. For the purpose of this SWPPP, a "storm" is defined as any precipitation event that could cause runoff and sedimentation from surfaces exposed by construction. The Contractors shall ensure that all spoil piles are stabilized and covered with heavy-duty plastic or visquine sheeting during any precipitation event and/or overnight.

To the maximum extent possible the site should be sloped to direct storm water drainage to a newly constructed 12-inch underground storm drain that will be connected to an existing Sacramento County owned storm drain. A construction staging area will be located at the project site and will be delineated with construction fencing.

All work performed between October 15th and May 1st each year shall be conducted in such a manner that the project site can be winterized within 24 hours. Winterized means implementing effective erosion and/or sediment controls that will prevent the discharge of earthen materials from the site throughout the rainy season without requiring maintenance, except under emergency conditions. In general, this requires stabilizing bare disturbed soils with mulch, erosion protection blankets, or other suitable materials, and installing perimeter sediment controls such as silt fencing, fiber logs, or other similar materials that will remain effective during significant rain events. Proper scheduling will reduce the amount and duration of soil exposed to erosion by wind, rain, runoff, and vehicle tracking by identifying the most appropriate time to perform the construction activities.

There are four main areas of BMPs that are anticipated to be most applicable to the SSWD Verner Avenue Well and Pumping Station Project. These include Sediment Controls, Erosion Control Measures, Non-Stormwater Waste Discharge Controls, and Waste and Materials Management Controls as listed in Table 2 and discussed below. Additional information and diagrams of select BMPs and erosion control measures are contained in Appendix B.

Table 2. List of select BMPs for Sediment, Erosion, Non-Storm Water, and Waste and Materials Management Control as described in Appendix B.

Sediment Controls
Silt Fences
Fiber Rolls
Straw Bale Barrier
Gravel and Sand Bag Barriers
Storm Drain Inlet Protection
Stabilized Construction Entrance/Exit
Stockpile Management
Street Sweeping
Erosion Control Measures
Wood Mulch
Straw and Pine Needle Mulch
Hydro Seeding
Natural and Synthetic Matting
Impervious Surface Runoff
Wind Erosion Control
Non-Stormwater Waste Discharge Controls
Pipeline Flushing and Testing
Saw Cutting
Lake and Channel Construction Activities
Well Drilling and Testing
Dewatering Operations
Paving Operations
Vehicle Fueling
Waste and Materials Management Controls
Material Delivery, Use, and Storage
Solid and Liquid Waste Management
Hazardous Materials/Waste Management/Spill Control

3.1.1 Non-Storm Water Management

Non-storm water discharges must not cause or contribute to a violation of water quality standards. Non-storm water discharges to control dust emissions during site development or water used for flushing of new pipelines shall be directed into the existing storm water system maintained by Sacramento County. Any non-storm water used for disinfecting pipelines that may contain constituents deleterious to the environment will be discharged into a sanitary sewer or into tanker trucks and disposed of according to local, state, and federal regulations.

If groundwater is encountered during construction, the water will be pumped to an offsite vegetated upland site where pollutants can be removed through filtering and infiltration or directly into tanker trucks. Water from trench dewatering can not be discharged to a storm water or sanitary sewer system. Well drilling discharges must be directed towards a detention basin to allow any pollutants to settle out or be pumped directly into tanker trucks.

3.1.2 Spill Prevention and Control

All contractors must practice Good Housekeeping Practices and take precautions to prevent spills and immediately clean up any spilled materials including petroleum products or chemicals. Specific BMP's for spill prevention include the contractor having on-site, at all times, a Spill Containment Kit. Contractors must ensure that all hazardous materials are covered and clearly marked. All equipment must be properly cleaned and inspected for leaks prior to and on a daily basis during construction operations.

3.1.3 Waste Management and Disposal

The discharge of pollutants to storm water shall be avoided through proper implementation of waste management and disposal BMPs designed to contain pollutants at their source before they come in contact with storm water. Contractors must ensure that BMPs for handling, storing, and discharging of wastes are in-place at all times. Waste containers must be located in designated areas protected from rainfall and contact with storm water runoff, and the debris collected on a regular basis. During construction the site shall be kept in a neat and clean condition, and free from any accumulation of rubbish. The contractor will perform a daily clean up of the site. Trash includes, but is not limited to, cigarettes, cigars, gum wrappers, tissue, cans, paper, and bags. Disposal of all rubbish and surplus materials shall be off the site in accordance with local codes and ordinances governing locations and methods of disposal, and in conformance with all applicable safety laws, and to the particular requirements of the OSHA Safety and Health Standards for Construction. All chemicals used during project construction or for project operation shall show approval of the U.S. Environmental Protection Agency. Use of all chemicals and disposal of residues shall be in accordance with the instructions of the manufacturer.

Fixed or portable chemical toilets must be provided at the project site and shall conform to the requirements of Part 1926 of the OSHA Standards for Construction. A regular collection of all sanitary and organic wastes will be disposed of away from the site in accordance with all federal, state, and local laws, regulations, and ordinances.

Where possible contractors and maintenance crews should use "dry" methods for site clean up such as sweeping, vacuuming and hand pick-up. All drilling fluids should be disposed of in an approved disposal site and not be allowed to flow off site. Procedures pertaining to waste management and disposal will be outlined at a pre-construction meeting.

3.2 Inspection, Maintenance, and Repair

Contractors are responsible for implementing functional BMPs to contain sediment and other pollutants on-site throughout the duration of the project. The SSWD, or its agent, will be responsible for inspecting project specific BMP and erosion control efforts with the goals of:

- identifying areas at the project site that could potentially contribute to a storm water discharge;
- determining whether additional control practices or corrective maintenance activities are needed;
- ensuring that all corrective maintenance to BMPs is performed as soon as possible; and
- evaluating whether measures to reduce pollutant loading are adequate and properly installed, and are functioning in accordance with the terms of the General Permit.

BMP inspections will be conducted daily by the SSWD for their effectiveness and problems brought to the immediate attention of the Project Manager, Mr. Warren Jung, or his assigned agent. A weekly inspection of BMPs at the project site will be conducted by the Project Manager and/or representative.

When rainfall is predicted soil stabilization and sediment transport controls must be implemented on all disturbed areas. BMPs must be inspected prior to, during, and after all storm events. Equipment, materials, and workers must be available for rapid response to failures and emergencies. The SSWD and its contractor's will immediately correct any construction related activities that cause or contribute to an exceedance of water quality standards. The SSWD will provide a report to the Central Valley Regional Water Quality Control Board (CVRWQCB) within 14-calendar days of any violation describing the corrective action.

The SSWD will retain the records of all monitoring information for at least three years from the date these were generated. These records include inspection compliance certifications, and non-compliance reporting required by the General Permit. The SSWD will submit the records to the CVRWQCB upon request. Table 2 provides a monitoring schedule for erosion control practices. Upon completion of the construction activities, the SSWD will certify, using the Notice of Termination, to the SWRCB that the construction activities are in compliance with the requirements of the General Permit.

Table 2. The SWPPP Monitoring Schedule.

Controls	Inspection Frequency	Maintenance/Repair Measures
Soil Stabilization	Every day and before, during, and after extended storms	Reapply mulch as needed
Silt Fences	Every day and before, during, and after extended storms	Replace torn sections, clear piled up debris as needed
Straw Wattles	Every day and before, during, and after extended storms	Repair and replace as needed
Drop Inlets	Every day and before, during, and after extended storms	Repair and replace as needed
General Condition Of Project Site	Every day and before, during, and after extended storms	Assess and implement appropriate measures as needed

3.3 Post Construction Storm Water Management

Post construction management practices will consist of maintaining erosion and sediment control as long as deemed necessary by the SSWD. Storm water management for runoff resulting from impervious surfaces at the site will be conveyed into a 12-inch underground storm drain, overboard drain box, and connect to an existing Sacramento County owned storm drain on Verner Avenue.

4.0 SOURCE IDENTIFICATION

4.1 History of Toxic Materials On-Site

No known toxic materials have been treated, stored, disposed, spilled or leaked at the project site.

4.2 Control Practices for Material Delivery, Handling, Access Areas, and Storage to Minimize Contact with Storm Water

Contractors are responsible for proper delivery, handling, and storage of on-site construction materials, and to prevent the likelihood of construction materials coming in contact with storm water discharge including fuel, oil, asphalt, and other materials that may be detrimental if released to the environment. A designated area will be available for construction material delivery and on-site storage areas shall be located away from storm drain inlets. The SSWD and its contractors will determine these storage areas prior to the commencement of construction.

An accurate inventory of on-site materials will be kept. Material Safety Data Sheets (MSDS) should be available for all materials stored. Gasoline, oil, and other flammable materials shall be stored either in temporary storage sheds or at a site where all debris is cleared within a radius of 50 feet. Storage areas shall be adequately posted with highly visible signs to warn of the flammables and to prohibit smoking in or around the buildings. Secondary containment systems around material storage areas must be in place to prevent run-off from leaving storage area(s). An adequate supply of spill kit materials must be on-site.

4.3 Equipment Storage and Maintenance

Construction equipment stored on-site will be kept within designated areas. Equipment maintenance, including on-site fueling and application of lubricants and fluids, will be performed in a designated area with appropriate BMPs in place. Vehicles and equipment shall be maintained in good working condition to prevent leakage.

4.4 Pre-construction Control Practices

A pre-construction meeting will be held by the SSWD, or its agent, to inform all contractors of the contents and procedures of the SWPPP. The SSWD's agent for monitoring this SWPPP is:

Luhdorff & Scalmanini Consulting Engineers, Inc
ATT: Mr. William A. Gustavson
Phone = (530) 661-0109
Cell = (916) 417-4196

5.0 SAMPLING AND ANALYSIS

5.1 Testing for Discharges to 303(d) Listed Waterbodies

Resolution No. 2001-46 amended the SWRCB General Permit for Construction Activities to require quantitative sampling for projects that discharge directly into waterbodies impaired either by sedimentation, siltation, or turbidity, identified by their listing in the SWRCB 303(d) list. This project does not discharge directly into such a water body, thus no quantitative sampling is required for this particular aspect of this SWPPP. The SSWD will ensure BMPs are installed to control erosion and sedimentation at the project site and will monitor their effectiveness.

5.2 Non-Visually Detectable Pollutants

Resolution No. 2001-46 also requires projects to sample for constituents that are not visually detectable in storm water discharges (e.g. chemicals used for treatment). Good housekeeping procedures will be implemented on site to prevent chemicals or other constituents from coming in contact with storm water and causing or contributing to exceedances of water quality objectives. If monitoring as outlined in Table 2 indicates that non-visually detectable constituents could potentially enter storm water runoff, a quantitative sampling program will be coordinated with the RWQCB.

5.2.1 Sample Locations

Should sampling be required, samples will be taken at the site that will capture the nature of the discharge (e.g., storm water inlet). Adequately trained personnel will take all samples in containers suitable for the analysis parameters.

5.2.2 Analysis Parameters and Quality Control

If necessary, analysis parameters will be determined by the nature of the suspected discharge, and will be sufficient to detect contamination by a given material. All analysis will be performed by a California Department of Health Services Environmental Laboratory Accreditation Program certified laboratory, and analysis will be conducted using either Environmental Protection Agency and/or American Public Health Association protocols in accordance with 40 CFR Part 136.

5.3 Data Evaluation

All data collected will be evaluated to determine if discharges have the potential to cause or contribute to an exceedance of water quality objectives in receiving waters. If the data indicates that this has occurred, potential sources will be identified and BMPs will be reviewed for their effectiveness and repaired or replaced as needed. Additionally, it will be determined if alternate BMPs are needed. Reporting requirements detailed in the General Permit will be followed should data evaluation identify a problem.

5.4 Training

Should sampling be required only personnel trained in water quality sampling procedures will collect storm water samples. Personnel will work to ensure that the sample is representative of the runoff being tested, collected in the appropriate container, preserved in accordance with the test method's specifications, and stored correctly until delivered to the laboratory.

5.5 Sampling Records

Results of laboratory analyses will be kept in a SWPPP monitoring log folder along with field training logs, and Chain of Custody forms at the SSWD Administration Office. As required by the General Permit all inspections, compliance certifications, and noncompliance reporting will be retained for a period of at least three years from the date generated or after project completion.

6.0 IMPLEMETATION OF APPROVED LOCAL PLANS

The proposed project is consistent with the environmental plans and policies of the City of Citrus Heights.

7.0 PREPARER CERTIFICATION

"I certify under penalty of law that this document and all attachments were prepared under my direction and supervision in accordance with a system designed to assure that qualified personnel properly gather and evaluate the information submitted. Based on my inquiry of the person or persons who manage the system, or these persons directly responsible for gathering the information, the information submitted is the best of my knowledge and belief, true, accurate, and complete. I am aware that there are significant penalties for submitting false information, including the possibility of fine and imprisonment. In addition, I verify that the provisions of the permit, including the development and implementation of a Storm Water Pollution Prevention Plan and Monitoring Plan, will be complied with."

--- ---

Landowner or Authorized Representative Date

8.0 REFERENCES

The BMPs and erosion control measures presented in this SWPPP have been integrated from several sources outlined below which should be consulted for additional information.

Caltrans Storm Water Quality Handbooks. 2003. Construction Site Best Management Practices Manual. Prepared by Caltrans.

California Stormwater BMP Handbook. 2003. www.cabmphandbooks.com.

SEMPRA Energy Utilities. 2002. Water Quality Construction BMP Manual. Prepared for SEMPRA Energy Utilities by URS Corp.

Tahoe Interagency Roadway Runoff Subcommittee. 2001. Planning Guidance for Implementing Storm Water BMPs in the Lake Tahoe Basin.

North Lahontan Region Project Guidelines for Erosion Control. Prepared by the Lahontan Regional Water Quality Control Board. www.swrcb.ca.gov/rwqcb6/BMP.

APPENDIX A

SWRCB General Permit for Discharges Associated with Construction Activity

Alan C. Lloyd Ph D.
Secretary for Environmental Protection

State Water Resources Control Board

Division of Water Quality
1001 I Street • Sacramento, California 95814 • (916) 341-5537
Mailing Address: P.O. Box 1977 • Sacramento, California • 95812-1977
FAX (916) 341-5543 • Internet Address: http://www.waterboards.ca.gov/stormwtr/index.html

Arnold Schwarzenegger
Governor

NATIONAL POLLUTANT DISCHARGE ELIMINATION SYSTEM (NPDES)
GENERAL PERMIT FOR
STORM WATER DISCHARGES ASSOCIATED WITH
CONSTRUCTION ACTIVITY (GENERAL PERMIT)
WATER QUALITY ORDER 99-08-DWQ

TABLE OF CONTENTS

Click on the items below to view Section

1. CHECKLIST FOR SUBMITTING A NOTICE OF INTENT
2. FACT SHEET
3. FACT SHEET AMENDMENTS

   APPENDIX A WATER QUALITY OBJECTIVES FOR SUSPENDED MATERIALS, SETTEABLE MATERIALS, SEDIMENT AND TURBIDITY

4. WASTE DISCHARGE REQUIREMENTS (GENERAL PERMIT)
5. ATTACHMENT 1: SWRCB AND RWQCB CONTACT LIST
6. GENERAL INSTRUCTIONS
7. NOTICE OF INTENT-LINE-BY-LINE INSTRUCTIONS
8. ATTACHMENT 2: NOTICE OF INTENT FORM
9. ATTACHMENT 3: 303d LISTED WATER BODIES FOR SEDIMENTATION
10. ATTACHMENT 4: CHANGE OF INFORMATION (COI) FORM

FACT SHEET
FOR
WATER QUALITY ORDER 99-08-DWQ

STATE WATER RESOURCES CONTROL BOARD (SWRCB)
901 P STREET, SACRAMENTO, CALIFORNIA 95814

NATIONAL POLLUTANT DISCHARGE ELIMINATION SYSTEM (NPDES)
GENERAL PERMIT FOR
STORM WATER DISCHARGES ASSOCIATED WITH
CONSTRUCTION ACTIVITY (GENERAL PERMIT)

BACKGROUND

In 1972, the Federal Water Pollution Control Act (also referred to as the Clean Water Act [CWA]) was amended to provide that the discharge of pollutants to waters of the United States from any point source is unlawful unless the discharge is in compliance with an NPDES permit. The 1987 amendments to the CWA added Section 402(p) which establishes a framework for regulating municipal and industrial storm water discharges under the NPDES Program. On November 16, 1990, the U.S. Environmental Protection Agency (USEPA) published final regulations that establish storm water permit application requirements for specified categories of industries. The regulations provide that discharges of storm water to waters of the United States from construction projects that encompass five (5) or more acres of soil disturbance are effectively prohibited unless the discharge is in compliance with an NPDES Permit. Regulations (Phase II Rule) that became final on December 8, 1999 expand the existing NPDES program to address storm water discharges from construction sites that disturb land equal to or greater than one (1) acre and less than five (5) acres (small construction activity). The regulations require that small construction activity, other than those regulated under an individual or Regional Water Quality Control Board General Permit, must be permitted no later than March 10, 2003.

While federal regulations allow two permitting options for storm water discharges (individual permits and General Permits), the SWRCB has elected to adopt only one statewide General Permit at this time that will apply to all storm water discharges associated with construction activity, except from those on Tribal Lands, in the Lake Tahoe Hydrologic Unit, and those performed by the California Department of Transportation (Caltrans). Construction on Tribal Lands is regulated by an USEPA permit, the Lahontan Regional Water Control Board adopted a separate NPDES permit for the Lake Tahoe Hydrologic Unit, and the SWRCB adopted a separate NPDES permit for Caltrans projects. This General Permit requires all dischargers where construction activity disturbs one acre or more, to:

1. Develop and implement a Storm Water Pollution Prevention Plan (SWPPP) which specifies Best Management Practices (BMPs) that will prevent all construction pollutants from contacting storm water and with the intent of keeping all products of erosion from moving off site into receiving waters.

2. Eliminate or reduce nonstorm water discharges to storm sewer systems and other waters of the nation.

3. Perform inspections of all BMPs.

This General Permit shall be implemented and enforced by the nine California Regional Water Quality Control Boards (RWQCBs).

The General Permit accompanying this fact sheet regulates storm water runoff from construction sites. Regulating many storm water discharges under one permit will greatly reduce the otherwise overwhelming administrative burden associated with permitting individual storm water discharges. Dischargers shall submit a Notice of Intent (NOI) to obtain coverage under this General Permit. It is expected that as the storm water program develops, the RWQCBs may issue General Permits or individual permits containing more specific permit provisions. When this occurs, those dischargers will no longer be regulated by this General Permit.

On August 19, 1999, the State Water Resources Control Board (SWRCB) reissued the General Construction Storm Water Permit (Water Quality Order 99-08-DWQ referred to as "General Permit"). The San Francisco BayKeeper, Santa Monica BayKeeper, San Diego BayKeeper, and Orange Coast Keeper filed a petition for writ of mandate challenging the General Permit in the Superior Court, County of Sacramento. The Court issued a judgment and writ of mandate on September 15, 2000. The Court directed the SWRCB to modify the provisions of the General Permit to require permittees to implement specific sampling and analytical procedures to determine whether Best Management Practices (BMPs) implemented on a construction site are: (1) preventing further impairment by sediment in storm waters discharged directly into waters listed as impaired for sediment or silt, and (2) preventing other pollutants, that are known or should be known by permittees to occur on construction sites and that are not visually detectable in storm water discharges, from causing or contributing to exceedances of water quality objectives. The monitoring provisions in the General Permit have been modified pursuant to the court order.

TYPES OF CONSTRUCTION ACTIVITY COVERED BY THIS GENERAL PERMIT

Construction activity subject to this General Permit includes clearing, grading, disturbances to the ground such as stockpiling, or excavation that results in soil disturbances of at least one acre of total land area. Construction activity that results in soil disturbances of less than one acre is subject to this General Permit if the construction activity is part of a larger common plan of development that encompasses one or more acres of soil disturbance or if there is significant water quality impairment resulting from the activity. Construction activity does not include routine maintenance to maintain original line and grade, hydraulic capacity, or original purpose of the facility, nor does it include emergency construction activities required to protect public health and safety. Dischargers should confirm with the local RWQCB whether or not a particular routine maintenance activity is subject to this General Permit.

A construction project which includes a dredge and/or fill discharge to any jurisdictional surface water (e.g., wetland, channel, pond, or marine water) will also need a CWA Section 404 permit

from the U.S. Army Corps of Engineers and a CWA Section 401 Water Quality Certification from the RWQCB/SWRCB. Storm water discharges from dredge spoil placement which occurs outside of Corps jurisdiction (upland sites) and are part of construction activity which disturbs one or more acres of land are covered by this general permit. Proponents of construction projects which disturb one or more acres of land within the jurisdictional boundaries of a CWA Section 404 permit should contact the local RWQCB to determine the applicability of this permit to the project.

NOTIFICATION REQUIREMENTS

It is the responsibility of the landowner to obtain coverage under this General Permit prior to commencement of construction activities. To obtain coverage, the landowner must file an NOI with a vicinity map and the appropriate fee with the SWRCB. In addition, coverage under this permit shall not occur until the applicant develops an adequate SWPPP for the project. Section A of the General Permit outlines the required contents of a SWPPP. For proposed construction activity on easements or on nearby property by agreement or permission, the entity responsible for the construction activity shall file an NOI and filing fee and shall be responsible for development of the SWPPP, all of which must occur prior to commencement of construction activities.

A separate NOI shall be submitted to the SWRCB for each construction site. Owners of new construction shall file an NOI prior to the commencement of construction. Owners of an ongoing construction site that is covered under the previous General Construction Permit (WQ Order No.92-08-DWQ) (1) shall continue to implement their existing SWPPP and monitoring program and (2) shall implement any necessary revisions to their SWPPP in a timely manner but in no case later than 90-calender days from adoption of this General Permit in accordance with Section A of this General Permit.

The NOI requirements of the General Permit are intended to establish a mechanism which can be used to clearly identify the responsible parties, locations, and scope of operations of dischargers covered by the General Permit and to document the discharger's knowledge of the requirements for a SWPPP.

The NOI must be sent to the following address:

State Water Resources Control Board
Division of Water Quality
Storm Water Permit Unit
P.O. Box 1977
Sacramento, CA 95812-1977

The total annual fee is the current base fee plus applicable surcharges.

When construction is complete or ownership has been transferred, dischargers shall file a Notice of Termination with the RWQCB certifying that all State and local requirements have been met in accordance with Special Provisions for Construction Activity, C.7, of the General Permit.

Dischargers who fail to obtain coverage under this General Permit for storm water discharges to surface waters will be in violation of the CWA and the California Water Code.

CONSTRUCTION ACTIVITY NOT COVERED BY THIS GENERAL PERMIT

This General Permit does not apply to storm water discharges from (1) those areas on Tribal Lands; (2) the Lake Tahoe Hydrologic Unit; (3) construction under one acre, unless part of a larger common plan of development or sale; (4) projects covered by an individual NPDES Permit for storm water discharges associated with construction activity; and (5) landfill construction that is subject to the general industrial permit.

Storm water discharges in the Lake Tahoe Hydrologic Unit are regulated by a separate permit(s) adopted by the California Regional Water Quality Control Board, Lahontan Region (LRWQCB). USEPA regulates storm water discharges on Tribal Lands. Permit applications for storm water discharges that will be conducted in the Lake Tahoe Hydrologic Unit must be submitted directly to the LRWQCB.

DESCRIPTION OF GENERAL PERMIT CONDITIONS

The following is a brief description of the major provisions of the General Permit and the basis for the General Permit.

Prohibitions

This General Permit authorizes the discharge of storm water to surface waters from construction activities that result in the disturbance of one or more acres of land. It prohibits the discharge of materials other than storm water and authorized non-storm water discharges and all discharges which contain a hazardous substance in excess of reportable quantities established at 40 Code of Federal Regulations (CFR) 117.3 or 40 CFR 302.4 unless a separate NPDES Permit has been issued to regulate those discharges. In addition, this General Permit contains provisions that uphold discharge prohibitions contained in water quality control plans, as implemented through the nine RWQCBs.

Effluent Limitations

Permits for storm water discharges associated with construction activity shall meet all applicable provisions of Sections 301 and 402 of the CWA. These provisions require controls of pollutant discharges that utilize best available technology economically achievable (BAT) and best conventional pollutant control technology (BCT) to reduce pollutants and any more stringent controls necessary to meet water quality standards.

It is not feasible at this time for the SWRCB to establish numeric effluent limitations. The reasons why it is not feasible to establish numeric effluent limitations are discussed in detail in SWRCB Order Nos. WQ 91-03 and WQ 91-04. Therefore, the effluent limitations contained in this General Permit are narrative and include the requirement to implement appropriate BMPs.

The BMPs shall primarily emphasize source controls such as erosion control and pollution prevention methods. The discharger shall also install structural controls, as necessary, such as sediment control which will constitute BAT and BCT and will achieve compliance with water quality standards. The narrative effluent limitations constitute compliance with the requirements of the CWA.

Elimination or reduction of nonstorm water discharges is a major goal of this General Permit. Nonstorm water discharges include a wide variety of sources, including improper dumping, spills, or leakage from storage tanks or transfer areas. Nonstorm water discharges may contribute a significant pollutant load to receiving waters. Measures to control spills, leakage, and dumping and to prevent illicit connections during construction shall be addressed through structural as well as non-structural BMPs.

This General Permit prohibits the discharge of materials other than storm water and authorized nonstorm water discharges. It is recognized that certain nonstorm water discharges may be necessary for the completion of construction projects. Such discharges include, but are not limited to irrigation of vegetative erosion control measures, pipe flushing and testing, street cleaning, and dewatering. Such discharges are allowed by this General Permit provided they are not relied upon to clean up failed or inadequate construction or post-construction BMPs designed to keep materials onsite. These authorized nonstorm water discharges shall (1) be infeasible to eliminate, (2) comply with BMPs as described in the SWPPP, and (3) not cause or contribute to a violation of water quality standards. Additionally, these discharges may be required to be permitted by the local RWQCB (e.g., some RWQCBs have adopted General Permits for dewatering discharges). This General Permit is performance-based to the extent that it prohibits the discharge of storm water that causes or threatens to cause pollution, contamination, or nuisance; but it also allows the owner/developer to determine the most economical, effective, and possibly innovative BMPs.

The requirements of this General Permit are intended to be implemented on a year-round basis, not just during the part of the year when there is a high probability of a precipitation event which results in storm water runoff. The permit should be implemented at the appropriate level and in a proactive manner during all seasons while construction is ongoing.

Weather and storm predictions or weather information concerning the 10-year, 6-hour storm event and mean annual rainfall can be obtained by calling the Western Regional Climate Center at 775-674-7010 or via the internet at www.wrcc.dri.edu/precip.html and/or www.wrcc.dri.edu/pcpnfreq.html.

Receiving Water Limitations Language

The receiving water limitations language is fundamentally different from the language adopted in the SWRCB General Industrial Activities Storm Water Permit on April 17, 1997. Construction related activities which cause or contribute to an exceedance of water quality standards must be corrected immediately and cannot wait for the RWQCB to approve a plan of action to correct. The dynamic nature of construction activity allows the discharger the ability to more quickly identify and correct the source of the exceedances. Therefore, the owner is

required to take immediate corrective action and to provide a report to the appropriate RWQCB within
14-calendar days of the violation describing the corrective action.

Storm Water Pollution Prevention Plan (SWPPP)

This General Permit requires development and implementation of a SWPPP. This document emphasizes the use of appropriately selected, correctly installed and maintained pollution reduction BMPs. This approach provides the flexibility necessary to establish BMPs which can effectively address source control of pollutants during changing construction activities.

All dischargers shall prepare and implement a SWPPP prior to disturbing a site. The SWPPP must be implemented at the appropriate level to protect water quality at all times throughout the life of the project. Nonstorm water BMPs must be implemented year round. The SWPPP shall remain on the site while the site is under construction, commencing with the initial mobilization and ending with the termination of coverage under the permit.

The SWPPP has two major objectives: (1) to help identify the sources of sediment and other pollutants that affect the quality of storm water discharges and (2) to describe and ensure the implementation of BMPs to reduce or eliminate sediment and other pollutants in storm water as well as nonstorm water discharges. The SWPPP shall include BMPs which address source control and, if necessary, shall also include BMPs which address pollutant control.

Required elements of a SWPPP include: (1) site description addressing the elements and characteristics specific to the site, (2) descriptions of BMPs for erosion and sediment controls, (3) BMPs for construction waste handling and disposal, (4) implementation of approved local plans, (5) proposed post-construction controls, including description of local post-construction erosion and sediment control requirements, and (6) nonstorm water management.

To ensure that the preparation, implementation, and oversight of the SWPPP is sufficient for effective pollution prevention, individuals responsible for creating, revising, overseeing, and implementing the SWPPP should participate in applicable training programs and document such training in the SWPPP.

SWPPPs are reports that are available to the public under Section 308(b) of the CWA and will be made available by the RWQCB upon request.

Monitoring Program

Another major feature of the General Permit is the development and implementation of a monitoring program. All dischargers are required to conduct inspections of the construction site prior to anticipated storm events and after actual storm events. During extended storm events, inspections must be made during each 24-hour period. The goals of these inspections are (1) to identify areas contributing to a storm water discharge; (2) to evaluate whether measures to reduce pollutant loadings identified in the SWPPP are adequate and properly installed and functioning in accordance with the terms of the General Permit; and (3) whether additional control practices or corrective maintenance activities are needed. Equipment, materials, and

workers must be available for rapid response to failures and emergencies. All corrective maintenance to BMPs shall be performed as soon as possible, depending upon worker safety.

Each discharger shall certify annually that the construction activities are in compliance with the requirements of this General Permit. Dischargers who cannot certify annual compliance shall notify the appropriate RWQCB. A well-developed monitoring program will provide a good method for checking the effectiveness of the SWPPP.

Retention of Records

The discharger is required to retain records of all monitoring information, copies of all reports required by this General Permit, and records of all data used to complete the NOI for all construction activities to be covered by the General Permit for a period of at least three years from the date generated. This period may be extended by request of the SWRCB and/or RWQCB. With the exception of reporting noncompliance to the appropriate RWQCB, dischargers are not required to submit the records, except upon specific request by the RWQCB.

APPENDIX B

BMP Schematics and Installation Details

Sediment Controls

Sediment control is a practice that traps particles of soil after they have been mobilized by construction activities. Once sediment is mobilized it is considered a pollutant. Sediment controls include silt fences, fiber rolls, straw bale barriers, gravel and sand bag barriers, storm drain inlet protection, stabilized construction entrance/exit, stockpile management, and street sweeping as outlined below.

• Silt Fences

Description

A silt fence is made of a filter fabric that has been entrenched, attached to supporting poles, and sometimes backed by a plastic or wire mesh for support. Silt fences are placed down-slope of exposed soil areas, below the toe of exposed and erodible slopes, and around environmentally sensitive areas such as wetlands to provide protection against sediment and/or sediment laden water transport off-site.

Contractor Installation and Maintenance:

- Excavate an approximate 6-inch wide by 6-inch deep trench along the line of the silt fence; key the silt fence in place, and backfill.
- Repair or replace split, torn, slumping, undercut or weathered fabric.
- Remove accumulated sediment when it reaches six inches deep behind the silt fence and incorporate into the project or dispose of at an approved site.
- Remove silt fence when no longer needed.

A silt fence provides protection against sediment and/or sediment-laden water transport off site.

Fiber Rolls

Description:

Fiber rolls are intended to intercept runoff, reduce flow velocity and provide removal of sediment from the runoff. Fiber rolls can be used as perimeter site control and are also placed along the toe of exposed and erodible slopes and.

Contractor Installation and Maintenance:

- Stake fiber rolls into a 2 to 4 inch deep trench with a width equal to the diameter of the fiber roll.
- Position fiber rolls with the ends rolled up slope to prevent runoff from going around the roll.
- Drive stakes at the end of each fiber roll and space 4 ft. maximum on center.
- If more than one fiber roll is placed in a row, the rolls should be overlapped.
- Repair or replace spilt, torn, unraveling, or slumping fiber rolls.
- Inspect fiber rolls prior to and after each storm event.
- See Figure 4 for installation details.

An example of fiber rolls being used for stockpile management.

Fiber Roll

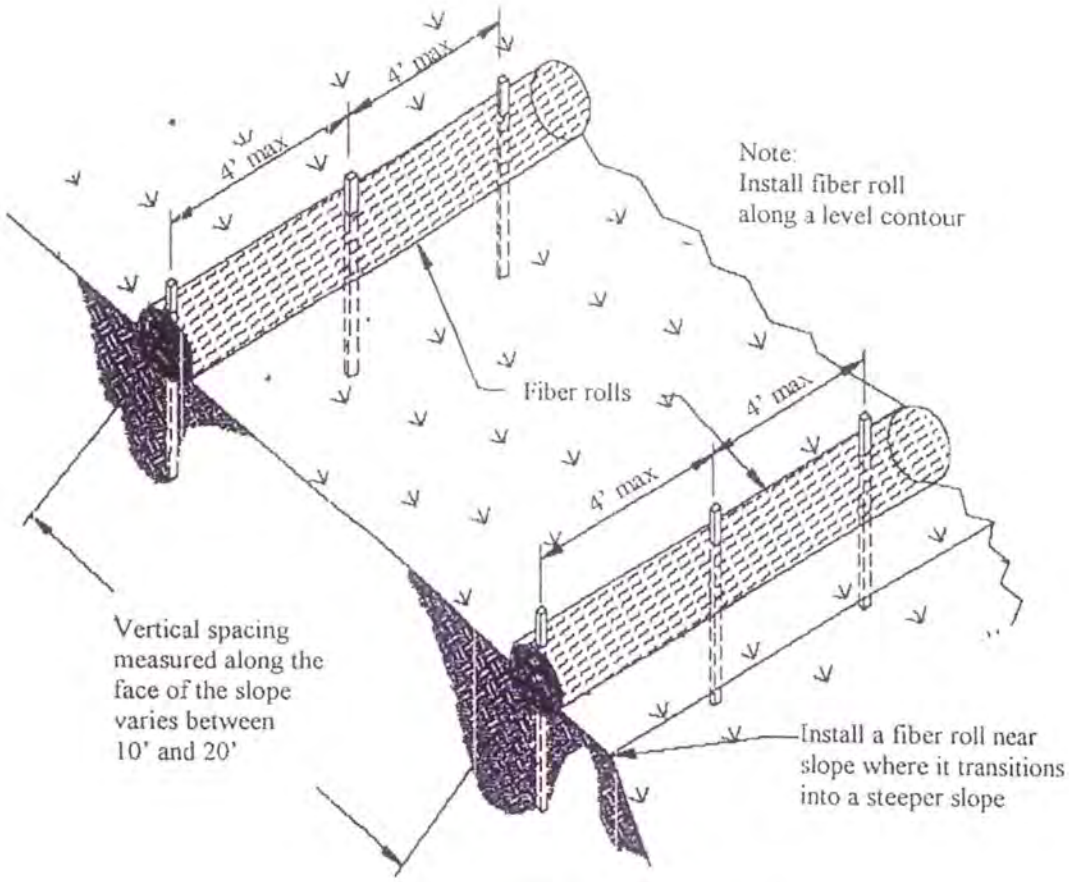

Typical Fiber Roll Installation
N.T.S.

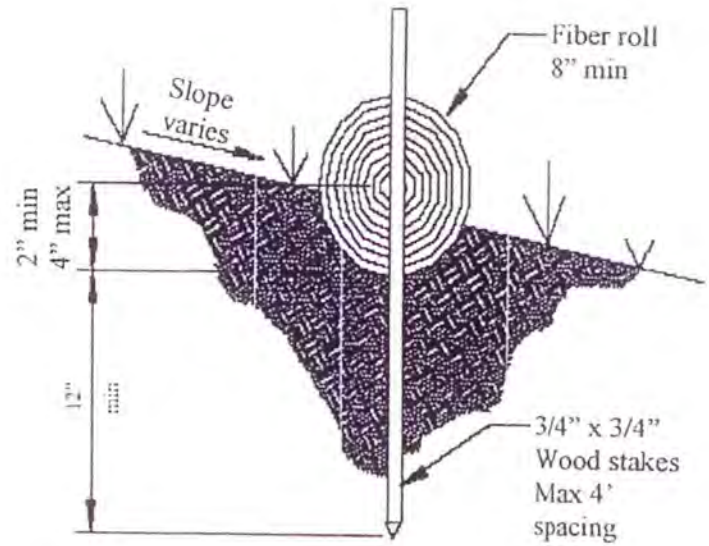

Entrenchment Detail
N.T.S.

Figure4. Fiber roll installation detail.

Straw Bale Barrier

Description:

A straw bale barrier is a series of straw bales positioned to intercept sheet flows allowing sediment to settle out.

Contractor Installation and Maintenance:

- Straw bale barriers must be trenched in and firmly staked with either two wood stakes or four bars driven through the bale and into the soil.
- Straw bales are not to be used for extended periods of time because they tend to rot and fall apart, especially when exposed to moisture.
- Sediment that accumulates behind the straw bales must be periodically removed in order to maintain BMP effectiveness.
- Remove straw bales when no longer needed.
- See Figure 5 for installation details.

A straw bale barrier is a series of straw bales positioned to intercept sheet flows allowing sediment to settle out.

Straw Bale Barrier

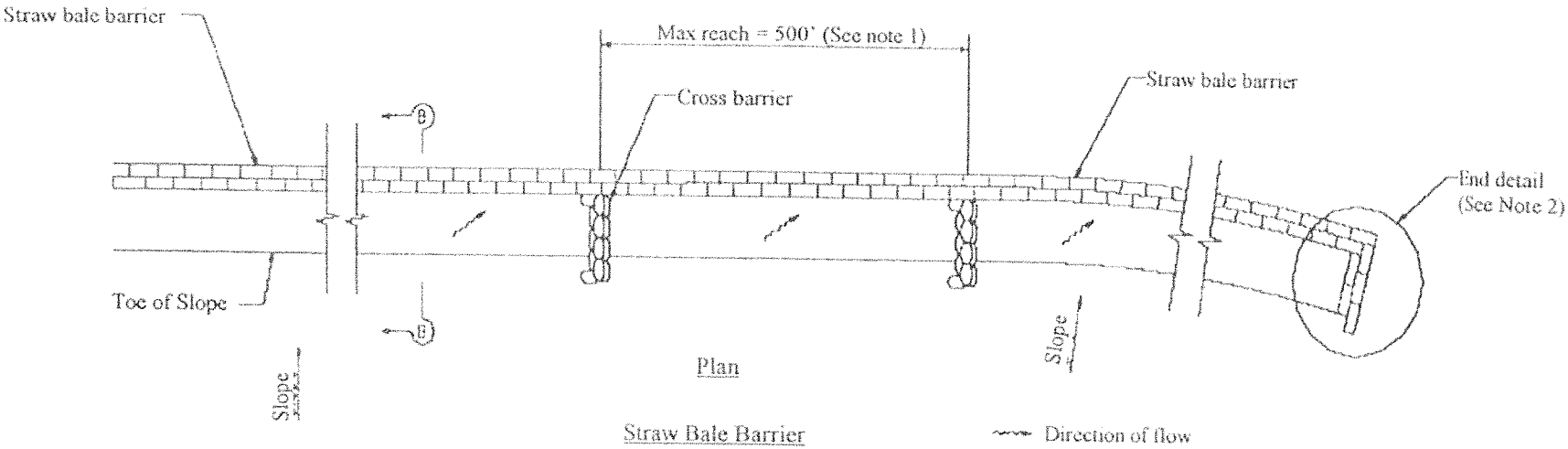

Notes

1. Construct the length of each so that the change in base elevation along the reach does not exceed ½ the height of the linear barrier. In no case shall the reach length exceed 500'.
2. The end of barrier shall be turned up slope.
3. Dimension may vary to fit field condition.
4. Stake dimension are nominal.
5. Place straw bales tightly together.
6. Tamp embedment spoils against sides if installed bales.
7. Drive angled wood stake before vertical stake to ensure tight abutment to adjacent bale.
7. Sandbag cross barriers should be a minimum of ½ and a maximum of 2/3 the height of the linear barrier.
8. Sandbag rows and layers should be offset to eliminate gaps.

Figure5. Straw bale barrier installation detail.

Gravel and Sand Bag Barriers

Description:

Gravel and sand bag barriers consist of stacked sand and gravel bags, designed to intercept and sediment-laden storm water and non-storm water runoff. Gravel and sand bag barriers are suitable as an erosion control measure below the toe of slopes, as sediment traps at culvert/pipe outlets, storm drains inlets, and around temporary stockpiles and spoil areas.

Contractor Installation and Maintenance:

- Turn the ends of the bag barriers up slope to prevent runoff from going around the site.
- Inspect bags before and after each storm event.
- Reshape or replace bags as needed. Repair washouts or other damages as needed.
- Remove accumulated sediments behind the barrier.
- Remove bags when no longer needed.
- See Figure 6 for installation details.

An example of a gravel bag barrier around a storm drain inlet.

Gravel Bag Berm and Sand Bag Barrier

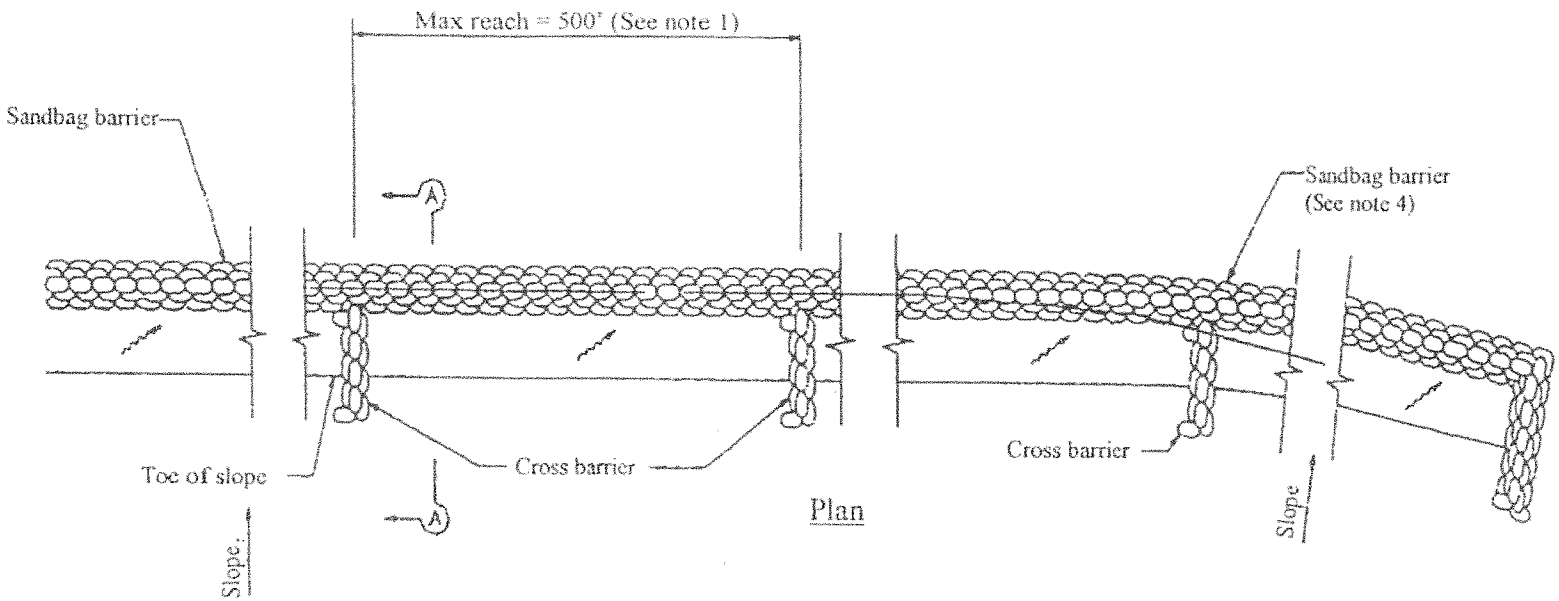

Sandbag Barrier

Notes

1. Construct the length of each reach so that the change in base elevation along the reach does not exceed ½ the height of the linear barrier. In no case shall the reach length exceed 500'.
2. Place sandbags tightly.
3. Dimension may vary to fit field condition.
4. Sandbag barrier shall be a minimum of 3 bags high.
5. The end of the barrier shall be turned up slope.
6. Cross barriers shall be a minimum of ½ and a maximum of 2/3 the height of the linear barrier.
7. Sandbag rows and layers shall be staggered to eliminate gaps.

Figure 6. Gravel bag berm and sand bag barrier installation detail.

Storm Drain Inlet Protection

Description:

Storm drain inlet protection is used to prevent the discharge of sediment-laden storm water and non-storm water runoff from construction activities entering into storm drains. Inlet protection usually requires both primary and secondary defense methods to prevent sediment-laden stormwater and non-stormwater discharges from entering the storm drain system. Straw bales should not to be used for drain inlet protection on paved surfaces.

Contractor Maintenance:

- Inspect inlet protection devices before and after storm events.
- Remove inlet protection devices at the end of the construction period, or when the inlet can no longer be impacted by the project.

Fiber rolls allow water to pond giving the sediment time to settle out before discharging into the storm drain. Accumulated sediment must be removed after each storm event.

Stabilized Construction Entrance/Exit

Description:

Stabilized construction accesses are required for use at construction sites where dirt or mud can be tracked onto roads by heavy equipment and/or where dust is a problem during dry weather conditions.

Contractor Installation and Maintenance:

- Limit the points of entrance/exit to the construction site and prevent runoff from leaving the construction site.
- Stabilize entrance/exit to support heaviest equipment that will use it.
- Place crushed aggregate to a depth recommended by the District's engineer or representative. A crushed aggregate greater than 3 in. but smaller than 6 in. should be used.
- Replace gravel material when surface voids are visible.

Stabilized construction entrances allow dirt to be removed from the tire treads as trucks leave construction sites.

Stockpile Management

Description:

Stockpile management practices are designed to reduce or eliminate stormwater or air pollution from stockpiles of soil and paving materials and must be implemented at all project sites that stockpile soil and other material.

Construction Installation and Maintenance:

- Soil stockpiles should be covered with plastic with a perimeter sediment barrier such as fiber rolls.
- Locate stockpiles away from storm water inlets and drainage channels.
- Repair and/or replace perimeter controls and covers as needed to keep them functioning properly.

Stockpile management will be implemented for stockpile soil and other material.

Street Sweeping

Description:

Street sweeping is an important BMP which prevents sediment from being tracked from the project site. Both self-propelled and hand sweeping are effective at removing sediment from streets and preventing their transport to storm drains or drainage channels.

Contractor Maintenance:

- Sediment tracked from construction vehicles must be swept on a daily basis and the removed sediment incorporated back into the project or disposed of at an appropriate location.

Sweeping prevents sediment from the project site from entering storm drains or receiving waters.

Erosion Control Measures

Erosion control is a source control practice that protects the soil surface from being detached by rainfall, flowing water, or wind. All project sites must be protected from erosion. Contractors should minimize disturbed areas by preserving existing vegetation. The cost for preserving existing vegetation will be less than the cost of applying erosion and sediment controls to the disturbed area.

Erosion control BMPs include wood mulch, straw and pine needle mulch, hydro seeding, natural and synthetic matting, impervious surface runoff, and wind erosion control.

Wood Mulch

Description:
Wood mulching consist of applying a mixture of shredded wood mulch, bark or compost to disturbed soils. The primary function of wood mulching is to reduce erosion by protecting bare soil from rainfall impact, increasing infiltration, and reducing runoff until permanent stabilization is established.

Contractor Installation and Maintenance:

- Wood mulch should be applied by hand and/or construction equipment and be evenly distributed on site to a depth of 2-3 in.
- The key consideration in maintenance is to provide an unbroken, temporary mulched ground cover until permanent vegetation takes hold.

Wood mulching consist of applying a mixture of shredded wood mulch and bark to disturbed soils.

Straw and Pine Needle Mulch

Description:
Straw and pine needle mulch are effective BMPs to reduce erosion by protecting bare soil from rainfall impact, increasing infiltration, and reducing runoff until permanent stabilization is established.

Contractor Installation and Maintenance:

- Evenly distribute straw mulch on the soil surface either by hand or equipment.
- The preferred method for anchoring straw mulch is to use a tackifier to glue the straw fibers together and to the soil surface.

Temporary Seed Placed in Idle Areas

Straw and pine needle mulch applied to protect the soil surface from the impact of rain drops and prevent erosion.

Hydro Seeding

Description:
Hydro seeding typically consists of applying a mixture of wood fiber, seed, fertilizer, and stabilizing emulsion with hydro-mulch equipment to temporarily protect exposed soils from erosion by water and wind until permanent vegetation is established.

Contractor Installation and Maintenance:

- Prior to application, roughen the area to be seeded.
- All seeds shall be in conformance with the California State Seed Law of the Department of Agriculture.
- All seeded areas shall be inspected for failures and re-seeded as needed.

Hydro seeding is applied on areas requiring temporary protection until permanent vegetation is established.

Natural and Synthetic Matting

Description:

Natural and synthetic matting including geotextile, plastic covers, jute, excelsior, straw blanket, and wood fiber blanket are commonly used to cover the soil surface to reduce erosion from rainfall impact and hold soil in place until vegetation is established.

Contractor Installation and Maintenance:

- Remove all rocks, vegetation, or other obstructions so that the selected covering will have complete, direct contact with the soil.
- U-shaped wire staples, metal geotextile stake pins, or triangular wooden stakes can be used to anchor mats to the ground surface.
- Begin at the top of the slope and anchor the blanket in a 6 inch deep by 6 inch wide trench. Backfill trench and tamp earth firmly.
- Overlap the edges of adjacent parallel rolls 2 to 3 inches and staple every 3 ft.
- Treated areas should be inspected routinely and before and after significant storm events. Any failures should be repaired immediately.
- See Figure 7 for installation details.

Plastic sheeting can be used as a temporary measure to cover the soil surface until mulching is completed.

Natural and Synthetic Matting

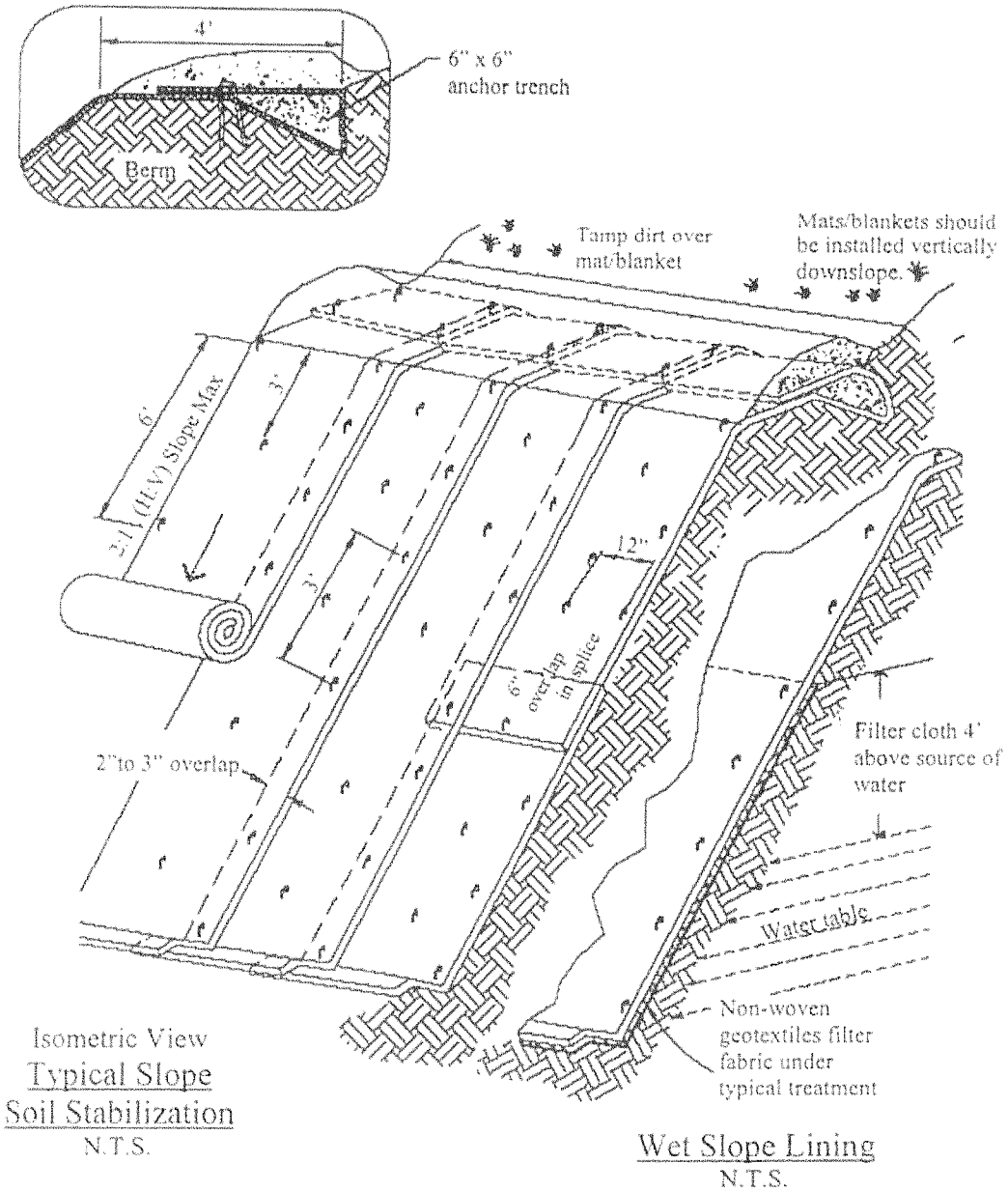

Notes

1. Slope surface shall be free of rocks, clods, sticks, and grass. Mats/blankets shall have good soil contacts.
2. Lay blankets loosely and stake or staple to maintain direct contact with the soil. Do not stretch.
3. Install per manufacturer's recommendations.

Figure 7. Natural and synthetic matting installation detail.

Impervious Surface Runoff

Description:
Projects involving the construction of water storage tanks and/or other site facilities creating impervious surfaces such as paving are required to direct all stormwater runoff into a detention basin and/or infiltration trench depending on the size of the project area. Detention basins must be sized to contain a runoff volume equal to a 20-year, 1-hour storm event.

Contractor Maintenance:
Detention basins will require periodic inspection to ensure they are clean of debris. Any sediment removed should be disposed at an appropriate location.

Detention basins and/or infiltration trenches must be installed to accommodate storm water runoff from impervious surfaces.

Wind Erosion Control

Description:
Wind erosion control is typically accomplished by applying water as necessary to prevent or alleviate dust generated by construction activities. Wind erosion control is required for construction vehicle traffic on unpaved roads, sediment tracking onto paved road, soils and storage piles, and areas with un-stabilized soil.

Contractor Maintenance:

- Watering prevents dust only for a short period and, depending on the level of excavation, may require frequent applications.
- Do not apply excessive water that leads to surface runoff.

Wind erosion can be minimized by applying water as necessary to prevent or alleviate dust nuisance generated by construction activities.

Non-Stormwater Discharge Controls

The statewide construction General Permit prohibits the discharge of materials other than stormwater and authorized non-stormwater discharges. Certain non-stormwater discharges are authorized for projects. However, discharges of non-stormwater that contain sediments or other pollutants to waters of the state are prohibited.

Non-storm water discharges include pipeline flushing and testing, saw cutting, well drilling and testing, dewatering operations, paving operations, and vehicle fueling as described below.

- **Pipeline Flushing and Testing**

Once new water utility pipelines have been installed they need to be flushed and tested. Water that will be used to flush and pressure test new pipelines is typically discharged into the storm drain and/or sewer system.

- **Saw Cutting**

Pipeline installation projects typically require saw cutting which discharge waste water. Storm drain protection must be in place at any down-gradient inlets that may be impacted by the discharge of wastewater. During saw cutting a wet vacuum should be used to lift the slurry from the pavement. As an alternative, sweeping waste water into a contained area surrounded by wattles and/or hay bales is acceptable. However, once the water has evaporated all sediment must be removed.

Saw cutting is routinely conducted for pipeline projects and waste water must be adequately contained.

- **Well Drilling and Testing**

Well drilling discharges must be directed towards a detention basin to allow any pollutants to settle out. Detention basins must be designed in accordance with the General Permit where detention basins are the only control measure proposed for the project.

- **Dewatering Operations**

Dewatering operations are practices that manage the discharge of pollutants when non-stormwater and accumulated water must be removed from a work location. A variety of methods can be used to treat water during dewatering operations. A hydro-excavator is often used for dewatering operations. Dewatering can also be performed by pumping water offsite to a vegetated upland site where pollutants can be removed through filtering and infiltration. In some cases, the use of multiple devices may be appropriate.

Depending on the extent of dewatering and to minimize any sediment transport, dewatering tanks that remove sediment from construction runoff may be required. Water enters the tank, passes through a fabric filter, and is discharged through the bottom of the tank. The filter separates sediment from the runoff. If additional treatment is desired, the tanks can be placed in series or as pretreatment for other methods. An example of a dewatering tank is shown below.

There are a variety of dewatering tanks that can be used to minimize sediment pollution.

- ## Gravity Bag Filter

A gravity bag filter, also referred to as a dewatering bag, is a square or rectangular bag made of non-woven geotextile fabric that collects sand, silt, and fines. Water is pumped into one side of the bag and seeps through the bottom and sides of the bag. A secondary barrier, such as a straw bale barrier, is placed around the bag to capture sediment that escapes the bag. There are also a variety of other dewatering methods including water that is treated by passing it through canisters filled with sand media, pressurized bag filters, and cartridge filters. An example of a gravity bag filter is shown below.

- ## Paving Operations

Contractors must prevent the discharge of pollutants from paving operations. Contractors must avoid transferring, loading, or unloading paving materials near storm drain inlets or watercourses.

- ## Vehicle Fueling

Vehicle equipment fueling practices must prevent fuel spills and leaks, and eliminate contamination of storm water. Fueling areas should be located away from storm drain inlets, drainage systems, and watercourses. All fueling operators should have readily available spill containment to clean up any spills immediately.

APPENDIX D

SSWD's Daily Inspection Report, List of Subcontractors, and Contractor/Subcontractor Certification

Glossary Of Select Water Quality Terminology

Best Management Practices (BMPs): Includes schedules of activities, maintenance procedures, and other management practices to prevent, eliminate, or reduce the pollution of receiving waters.

Construction Activity: Includes clearing, grading, excavation, and contractor activities that result in soil disturbance.

Detention: The capture and subsequent release of stormwater runoff from a construction site slower than it is collected with the difference being held in temporary storage.

Discharge: A release or flow of stormwater or other substances from a construction site, including discharges to storm water drains.

Disturbed Soil Areas: Areas of exposed or erodible soil, including stockpiles, that are within the construction limits and are a result of construction activities.

Inlet: An entrance into a storm drain, ditch, or other waterway.

Non-Stormwater Discharge: Any discharge to a storm water conveyance system that is not composed entirely of stormwater.

Nonpoint Source Pollution: Pollution that does not come from a point source. Nonpoint source pollution originates from diffuse sources that are mostly related to land use.

Point Source: Any discernible, confined, and discrete conveyance from which pollutants are or may be discharged.

Pollutant: Generally, any substance introduced into the environment that adversely affects the usefulness of the resource, particularly sediment loading in the Truckee River.

Pollution Prevention: Practices and actions that reduce or eliminate the generation of pollutants.

Runoff: Water originating from rainfall, melted snow, and other sources (e.g., sprinkler irrigation) that flows over the land surface to drainage facilities, rivers, streams, lakes, and wetlands.

Run-on: Offsite stormwater surface flow or other surface flow that enters a construction site.

Sedimentation: The process of depositing soil particles, clays, sands, or other sediments that were picked up by runoff.

Sediments: Soil, sand, and minerals washed from land into water, usually after rain that collect in rivers, lakes, and wetlands and adversely impact aquatic resources.

Source Control BMPs: The technique of stopping and/or reducing pollutants at their point of generation so that they do not come into contact with stormwater.

Storm Drains: Above and below ground structures for transporting stormwater to streams or outfalls for flood control purposes.

Stormwater: Stormwater is that portion of precipitation that flows across a surface to a storm drain system or receiving waters.

Stormwater Pollution Prevention Plan (SWPPP): A written plan that documents the series of construction activities and the BMPs and erosion control measures that will be implemented to prevent pollution by stormwater discharges from construction sites.

APPENDIX C

GLOSSARY OF SELECT WATER QUALITY TERMINOLOGY

SACRAMENTO SUBURBAN WATER DISTRICT

Daily Inspection Report
Monitoring & Reporting Program

An inspection of the construction site shall be made daily during active construction and monthly during long periods of inactivity (e.g. winter), by the Discharger, resident engineer, superintendent, general contractor, or equivalent. The purpose of the inspection is to discover potential water quality problems at the construction site so that the Discharger can implement corrective measures. The following items should be inspected at the site, as applicable:

Project:	**Date:**

O.K.	See Notes	
		Damaged containment dikes or erosion fencing
		Unauthorized access by vehicles and/or sediment tracking off the site
		Boundary fence damage or removal
		Disturbed areas with no erosion control protection
		Evidence of any sediment leakage through erosion control fencing or containment dikes
		Soil piles unprotected or located in drainage ways
		Spilled chemicals, paints, fuels, oils, sealants, etc.
		Upstream runoff diversion structures in place and operational
		Any signs of downstream erosion from runoff discharges
		Sediment accumulation within onsite storm water drainage facilities

Notes:

By: _____ Title _____ Page 1 of _____ Pages

SACRAMENTO SUBURBAN WATER DISTRICT

List of Subcontractors

Project Name: _____

Contractor/ Subcontractor Name: _____

Contractor/ Subcontractor Address: _____

_____

I have reviewed the project Storm Water Pollution Prevention Plan. I understand all of the conditions and requirements therein and I agree to construct this project in accordance with those requirements.

Authorized Representative for Contractor/Subcontractor:

_____
(Please Print Name)

_____
Title

_____ _____
(Signature) Date

SACRAMENTO SUBURBAN WATER DISTRICT

Contractor/Subcontractor

Storm Water Pollution Prevention Plan
Certificate Form

The general contractor awarded the construction contract shall complete the following list. The general contractor and all subcontractors shall complete the corresponding certification form.

Subcontractor	Contact Person & Phone Number	Scope of Work	SWPPP Reviewed Y/N
1)			
2)			
3)			
4)			
5)			
6)			
7)			
8)			
9)			
10)			

SACRAMENTO SUBURBAN WATER DISTRICT

VERNER AVE. WELL AND TREATMENT FACILITIES

November 2008

CITY OF CITRUS HEIGHTS
SACRAMENTO COUNTY, CALIFORNIA

UTILITY REPRESENTATIVES		
UTILITY	REPRESENTATIVES	PHONE
GAS: P.G. & E.	DELIA SDLORIO	(916) 386-5266
ELECTRICITY: S.M.U.D.	MIKE RUDEK	(916) 732-5720
TELEPHONE: S.B.C.	DARIA NEWBERRY	(916) 453-7460
WATER: SAC.SUBURBAN W.D.	WARREN JUNG	(916) 679-2896
FIRE: SAC. METRO.F.D.	STEVE BRODERICK	(916) 942-3300
SEWER: SAC. COUNTY W.Q.	MELENIE SPAHN	(916) 876-6010
DRAINAGE: SAC. COUNTY W.R.	GEORGE BODTH	(916) 874-6484
U.S.A.	N/A	1 800 227-2600

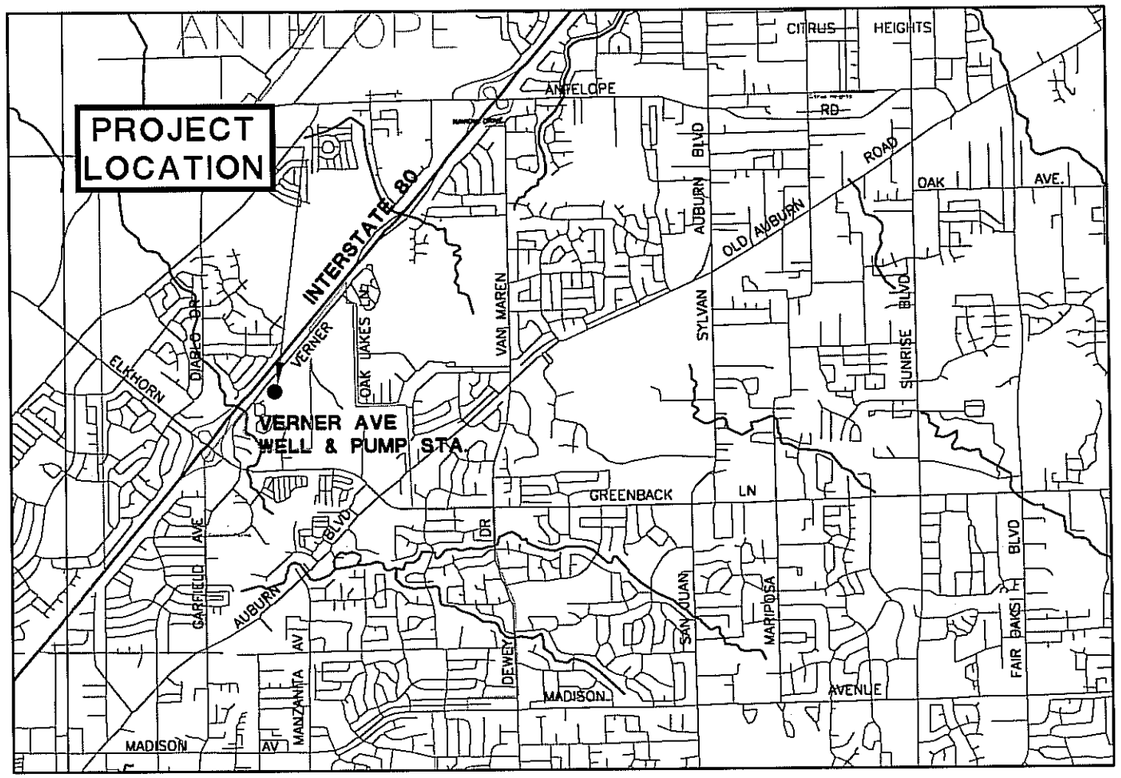

LOCATION MAP

Scale in Feet
0' 1000' 2000' 4000'

APPROVAL FOR ENCROACHMENT PERMIT

Approved By: _____
CITY OF CITRUS HEIGHTS Date

WATER APPROVAL BLOCK

Approved By: _____ 11/25/08
SACRAMENTO SUBURBAN WATER DISTRICT Date

APPROVAL FOR CONSTRUCTION

_____
SACRAMENTO SUBURBAN WATER DISTRICT

_____
LUHDORFF AND SCALMANINI CONSULTING ENGINEERS

DATE: November 2008

LINE IS 2 INCHES AT FULL SIZE (IF NOT 2"-SCALE ACCORDINGLY)

FILE G-1.dwg
DRAWN TAD
DESIGNED TAD
CHECKED WG
CHECKED

REGISTERED PROFESSIONAL ENGINEER — WILLIAM G. SCALMANINI — Exp 3-31-2010 — CIVIL — STATE OF CALIFORNIA

LUHDORFF & SCALMANINI CONSULTING ENGINEERS

REVISIONS

ZONE	REV.	DESCRIPTION	BY	DATE	APP.

SACRAMENTO SUBURBAN WATER DIST.
VERNER AVENUE WELL AND TREATMENT FACILITIES

SUBMITTED: _____ DATE: _____
SUBMITTAL APPROVED: _____ DATE: _____

TITLE SHEET AND LOCATION MAP

SCALE N.T.S.
DRAWING NUMBER G-1
SHEET NUMBER 1 OF 52

CAD FILE: G:/Projects/Sacramento Suburban W D/07-3-073/G-1.dwg CFG FILE: LSCE2500.FCP_MRG DATE: 09-23-08 08:26am

ABBREVIATIONS

AB	Aggregate Base
ABBC	Asbestos Bonded Bituminous Coated
ABM	Air-Blown Mortar
ABT	Anchor Bolt
Abut	Abutment
AC	Asphaltic concrete
ACB	Asphalt Concrete Base
ACP	Asbestos Cement Pipe
AFES	Alternative Flared End Section
Alt	Alternate
ASB	Aggregate Subbase
Ave	Avenue
Az	Azimuth
BSP	Black Steel Pipe
Bldg	Building
Blvd	Boulevard
BM	Bench Mark
BV	Butterfly Valve
CAP	Corrugated Aluminum Pipe
CARV	Combination Air Release Valve
CC	Center to Center
CF	Cubic Foot
CFM	Cubic Feet per Minute
CIP	Cast Iron Pipe
Clr	Clear, Clearance
℄	Centerline
CL	Class
C.L.	Chain Link
CMP	Corrugated Metal Pipe
CMU	Concrete Masonry Unit
Co	County
Col	Column
CONC	Concrete
CONN	Connection
Const	Construct(ion)
CPLG	Coupling
CRSP	Concreted Rock Slope Protection
CSP	Corrugated Steel Pipe
CTB	Cement Treated Base
CY	Cubic Yard
CV	Check Valve
D	Depth
Dbl	Double
DET	Detail
DI	Drainage/Drop Inlet
Dia	Diameter
DICL	Ductile Iron, Cement Lined
DIP	Ductile Iron Pipe
Dist	Distance
Dr	Drive
DWG	Drawing
Dwy	Driveway
EA	Each
ECR	End Curb Return
ELEV	Elevation
EL	Elbow
ELEC	Electric
Emb	Embankment
EP	Edge of Pavement
ETW	Edge of Traveled Way
EW	Each Way
Exc	Excavation
Exist	Existing
Exp Jt	Expansion Joint
F	Female
FCA	Flanged Coupling Adapter
Fdn	Foundation
FES	Flared End Section
FF	Filter Fabric
F&G	Frame & Grate
FG	Finished Grade
FH	Fire Hydrant
FL	Flow Line
FLG	Flange(d)
FRP	Fiberglass Reinforced Plastic
FS	Flow Switch
Ft	Feet or Foot
Ftg	Footing
Ga	Gage
GAF	Galvanize After Fabrication
GAL	Gallon
Galv	Galvanized
GPM	Gallons per Minute
GSP	Galvanized Steel Pipe
GR	Ground
GV	Gate Valve
H	Height
Horiz	Horizontal
HS	High Strength
HV	Hose Valve
HW	Headwall
HWL	High Water Level
Hwy	Highway
IB	Imported Borrow
ID	Inside Diameter
INST	Install
INV	Invert
Irr	Irrigation
JP	Joint Pole
Jt	Joint
L	Length
LB	Pound
LF	Linear Foot
Loc	Location
Ln	Lane
LS	Lump Sum
Lt	Left
LWL	Low Water Level
M	Male
Max	Maximum
MBGR	Metal Beam Guard Railing
MCC	Motor Control Center
MH	Manhole
MI	Mile(s)
MIN	Minimum
Misc	Miscellaneous
Mkr	Marker
ML	Match Line
Mod	Modified or Modify
Mon	Monument
Mtl	Material
No	Number
NTS	Not to Scale
Obir	Obliterate
OC	On Center
OD	Outside Diameter
OG	Original Ground
OH	Overhead
PCC	Portland Cement Concrete
PE	Polyethylene
Ped	Pedestrian
PG	Profile Grade
PI	Point of Intersection
PL	Plate
P/L	Property Line
PB	Pull Box
POC	Point on Horizontal Curve
POT	Point on Tangent
PP	Power Pole
PRV	Pressure Relief Valve
PVC	Polyvinyl Chloride (Pipe)
Pvmt	Pavement
R	Radius
R&D	Remove & Dispose
R&R	Remove & Relocate
R&S	Remove & Salvage
R&W	Remove & Waste
RCP	Reinforced Concrete Pipe
Rd	Road
RD	Relative Density
Reinf	Reinforced or Reinforcing
Rel	Relocate
Ret	Retaining
RP	Reference Point
RR	Railroad
RSP	Rock Slope Protection
Rt	Right
Rte	Route
RW	Retaining Wall
R/W	Right of Way
RWD	Redwood
Salv	Salvage
SC	Sand Cushion
SCH	Schedule
SD	Storm Drain
Sec	Section
Sep	Separation
SG	Subgrade
Sho	Shoulder
SHT	Sheet
SM	Selected Material
Spec	Special
SPP	Slotted Plastic Pipe
SQFT	Square Foot
SQYD	Square Yard
SSTL	Stainless Steel
STL	Steel
St	Street
STA	Station
Std	Standard
Surf	Surfacing
SW	Sidewalk or Sound Wall
SS	Sanitary Sewer
TBM	Temporary Bench Mark
Tbr	Timber
TC	Top of Curb
Temp	Temporary
TG	Top of Grade
Thd	Threaded
TP	Telephone Pole
Trans	Transition
Typ	Typical
Typ Sec	Typical Section
UD	Underdrain
Val	Valve
Var	Variable
VCP	Vitrified Clay Pipe
Vert	Vertical
W	Width
W/	With
W/O	Without
WH	Weep Hole
WWM	Welded Wire Mesh
WSP	Welded Steel Pipe
WT	Weight
WV	Water Valve
WW	Wing Wall
XFMR	Transformer
Xing	Crossing
X Sec	Cross Section

GENERAL NOTES

1. BEFORE BEGINNING ANY EXCAVATION, THE CONTRACTOR SHALL NOTIFY THE UNDERGROUND SERVICE ALERT SYSTEM (1-800-642-2444) AND ALL UNDERGROUND FACILITIES SHALL BE LOCATED BY THE APPROPRIATE AGENCIES.
2. LOCATIONS & DEPTHS OF EXISTING UNDERGROUND PIPELINES ARE APPROXIMATE. CONTRACTOR IS RESPONSIBLE FOR EXACT FIELD LOCATIONS. A MINIMUM OF 12" VERTICAL CLEARANCE BETWEEN PIPES CROSSING UNDERGROUND SHALL BE MAINTAINED WHETHER SHOWN ON DRAWINGS OR NOT. ANY CONFLICTS IN PIPING WILL BE IMMEDIATELY BROUGHT TO THE ATTENTION OF THE ENGINEER.
3. THE CONTRACTOR SHALL CONSTRUCT THE WORK SPECIFIED IN THESE CONSTRUCTION DOCUMENTS IN ACCORDANCE WITH THE CITY OF CITRUS HEIGHTS, DEPT. OF PUBLIC WORKS AND TRANSPORTATION IMPROVEMENT STANDARDS AND SPECIFICATIONS. ANY WORK NOT COVERED BY THE REFERENCE ABOVE, SHALL BE IN ACCORDANCE WITH THE STATE OF CALIF. DEPT. OF TRANSPORTATION CURRENT STANDARD SPECIFICATIONS AND STANDARD PLANS.
4. THE CONTRACTOR SHALL NOT BEGIN WORK SHOWN HEREIN UNTIL THE COUNTY ENGINEER'S SIGNATURE OF APPROVAL IS AFFIXED HEREON AND ALL APPLICABLE PERMITS HAVE BEEN OBTAINED.
5. CONTRACTOR SHALL ASSUME SOLE AND COMPLETE RESPONSIBILITY FOR CONSTRUCTION OF THIS PROJECT, INCLUDING SAFETY OF ALL PERSONS AND PROPERTY. THIS REQUIREMENT SHALL APPLY CONTINUOUSLY AND NOT BE LIMITED TO NORMAL WORKING HOURS. THE CONTRACTOR SHALL DEFEND, INDEMNIFY AND HOLD THE COUNTY, OWNER AND ENGINEER HARMLESS FROM ANY AND ALL LIABILITY, REAL OR ALLEGED IN CONNECTION WITH THE PERFORMANCE OF WORK ON THIS PROJECT, EXCEPTING FOR LIABILITY ARISING FROM THE SOLE NEGLIGENCE OF THE CITY, OWNER OR ENGINEER.
6. THE CONTRACTOR SHALL NOTIFY THE ENGINEER AT LEAST 2 WORKING DAYS IN ADVANCE OF ANY WORK WHICH WILL REQUIRE THE INSPECTION SERVICES OF THE CITY ENGINEERING DIVISION. THIS SHALL INCLUDE, BUT NOT TO BE LIMITED TO, EXCAVATION WORK AND BACKFILLING AROUND EXISTING UTILITIES SUCH AS WATER, SEWER, STORM DRAINS, STREET LIGHTING, ETC.
7. THE CONTRACTOR SHALL NOTIFY THE CITY DEPT. OF PUBLIC WORKS AND TRANSPORTAION FOR A PRECONSTRUCTION CONFERENCE (10) TEN DAYS IN ADVANCE OF STARTING ANY CONSTRUCTION ACTIVITIES.
8. THE CONTRACTOR SHALL OBTAIN ALL NECESSARY ENCROACHMENT PERMITS AND SHALL POSSESS APPROVED PLANS PRIOR TO BEGINNING WORK. A SET OF SIGNED AND APPROVED PLANS ARE TO BE ON-SITE AT ALL TIMES.

ELECTRICAL SYMBOL LEGEND

FLUORESCENT FIXTURE	
WALL MOUNTED/BRACKET FIXTURE	
SWITCH S.P.S.T.	
SWITCH 3-WAY	
DUPLEX OUTLET, 20A, 125V, GROUNDED	
GFI DUPLEX OUTLET, GFI PROTECTED	
OUTLET, THERMOSTAT; +60" U.O.N.	
JUCTION BOX; CEILING, WALL	
W.P. DISCONNECT	
MOTOR STARTER	
TRANSFORMER	
(E) PANELBOARD	
(N) PANELBOARD	
TERMINAL CABINET	
MOTOR	
(N) NEW	
(E) EXISTING	
FM FLOW METER	
MF1	1/2"C. W/ 3-#12 W/G. UNLESS OTHERWISE NOTED.
	CONDUIT, EXPOSED
	BRANCH CIRCUIT HOMERUN. CROSS HATCHING INDICATES NUMBER OF #12 AWG WIRES WHEN MORE THAN TWO OR U.O.N.
	CONDUIT, CONCEALED; FLOOR OR UNDERGROUND
	CONDUIT, CONCEALED; WALL OR CEILING
CKT.	CIRCUIT
+24"	INDICATES MOUNTING HEIGHT TO CENTER OF OUTLET A.F.F.
U.O.N.	UNLESS OTHERWISE NOTED
W.P.	ADJACENT TO SYMBOL INDICATES WEATHERPROOF OUTLET OR DEVICE
G.F.I.	GROUND FAULT PROTECTED OUTLET OR CIRCUIT

SYMBOLS INDICATED ABOVE MAY NOT NECESSARILY APPEAR AS PART OF THESE DRAWINGS IF NOT REQUIRED

A.F.F. ABOVE FINISHED FLOOR

PIPING SYMBOLS

- Concrete Thrust Block w/Anchor Rod
- Gate Valve, Ball Valve, Globe Valve
- Check Valve
- Split Disc Check Valve
- Solenoid Valve
- Pressure Reducing Valve
- Saunders Diaphragm Valve
- Pressure Relief Valve
- Plug Valve
- Angle Valve
- Butterfly Valve
- Union
- Reducer
- Strainer
- Cleanout
- Pressure Gauge or Switch
- Hose Valve
- Fire or Wharf Hydrant
- Mechanical Joint or Bell & Spigot Fitting
- Flanged Fitting
- Flanged Coupling Adapter
- Flexible Coupling
- Grooved Coupling
- Mechanical Joint
- Mega-Lug

EXISTING TOPOGRAPHIC LINES & SYMBOLS

- Building or Foundation
- Shoulder
- Surfaced Road w/Lone Stripe
- Edge of Pavement
- Curb w/Gutter
- Gravel or Dirt Road Drives or Walks
- Trail
- Railroad
- Bridge
- Culvert & Headwalls
- Fence & Gate
- Retaining Wall w/Fence on Top
- Wall
- Guard Rail
- Small Stream or Ditch
- Body of Water
- Orchard, Missing Trees, Interior Trees
- Trees
- 27.0 x 27.0 Spot Elevation
- Ground Cover
- Roadside Signs (New & Existing)
- Transmission Tower
- Fire Hydrant
- Power/Utility Pole
- Manhole
- Valve

Existing Underground Utilities

- W W Water
- G G Gas
- S S Sewer
- E E Electric
- T T Telephone
- GS GS Gasoline
- O O Oil
- TV TV Television
- SD SD Storm Drain
- Fiberoptics

CONTROL POINTS

- Horizontal & Vertical Control Point
- Horizontal Control Point
- Vertical Control Point
- Bench Mark

NEW CONSTRUCTION & CADASTRAL SYMBOLS

- R/W Right of Way Lines
- Toe of Slope / Top of Cut — Slope Lines
- Original Ground Line
- State / County / City / Forest / Subdivision, Section, Grant / Rancho — Boundary Line
- 16.0 Spot Elevation
- Structure (Bridge)
- Fire Hydrant
- Manhole
- Valve
- ℄ 9 260 1 Centerline or Layout Lines
- A M-1 Section Identification Letter; Sheet Number Where Section Appears (-- Indicates section located on same page)
- A M-1 Detail Identification Letter; Sheet Number Where Detail Appears (-- Indicates detail located on same page)
- A Detail/Section Identification Letter (Not Referenced in Plans)
- New Facilities
- Existing Facilities
- Fence
- Property Line
- Easement
- New Embankment
- Existing Embankment
- Existing Pipe or Structure to be Abandoned or Removed
- 12" Tree & Trunk Diameter
- 12" Tree to be Removed
- Existing Power Pole
- Face of Wall — New Wall
- New Guard Railing
- Concrete Barrier
- Double Metal Beam Barrier, Double Thrie Beam Barrier
- Curb Without Gutter
- Curb w/Gutter
- Ditch Flow Line
- Flared End Section — Pipe Culvert
- Drainage Inlet
- Headwall Endwall — Pipe Culvert

New Underground Utilities

- W W Water
- G G Gas
- S S Sewer
- E E Electric
- T T Telephone
- GS GS Gasoline
- O O Oil
- TV TV Television
- SD SD Storm Drain

DATE: November 2008

LINE IS 2 INCHES AT FULL SIZE (IF NOT 2"-SCALE ACCORDINGLY)

FILE G-2.dwg
DRAWN TAD
DESIGNED TAD
CHECKED WG
CHECKED

REGISTERED PROFESSIONAL ENGINEER JOSEPH C. SCALMANINI No. 28233 Exp. 3-31-2010 CIVIL STATE OF CALIFORNIA

LUHDORFF & SCALMANINI CONSULTING ENGINEERS

REVISIONS

ZONE	REV.	DESCRIPTION	BY	DATE	APP.

SACRAMENTO SUBURBAN WATER DIST.
VERNER AVENUE
WELL AND TREATMENT FACILITIES

SUBMITTED: _____ DATE: _____
SUBMITTAL APPROVED: _____ DATE: _____

ABBREVIATIONS NOTES AND SYMBOLS

SCALE N.T.S.
DRAWING NUMBER G-2
SHEET NUMBER 2 OF 52

CAD FILE: G:/Projects/Sacramento Suburban W D/07-3-075/BID_SET/G-2.dwg CFG FILE: LSCE2500.PCP_MRG DATE: 11-25-08 10:50am

INDEX OF DRAWINGS

GENERAL

SHEET NO.	TITLE
G-1	TITLE SHEET AND LOCATION MAP
G-2	ABBREVIATIONS, NOTES AND SYMBOLS
G-3	INDEX OF DRAWINGS
G-4	EROSION CONTROL - DETAIL I
G-5	EROSION CONTROL - DETAIL II
G-6	SEWER/PIPELINE CROSSING DETAILS, WATER MAIN PIPELINE INSTALLATION DETAILS
G-7	PRODUCTION/ASR WELL PROFILE

CIVIL

SHEET NO.	TITLE
C-1	SITE PLAN
C-2	GRADING PLAN
C-3	CIVIL DETAILS
C-4	CIVIL DETAILS
C-5	CIVIL DETAILS
C-6	CIVIL DETAILS
C-7	CIVIL DETAILS
C-8	NOT USED
C-9	FENCE ARRANGEMENT AND DETAILS
C-10	FENCE DETAILS
C-11	SSWD SIGN
C-12	TREE REMOVAL PLAN
C-13	SWPPP SITE PLAN

ELECTRICAL

SHEET NO.	TITLE
E-1	ELECTRICAL SYMBOLS & ABBR.
E-2	INSTRUMENTATION SYMBOLS & ABBR.
E-3	PUMP STATION P&ID
E-4	HYPOCHLORITE AND MISC. P&ID
E-5	ELECTRICAL ONE-LINE DIAGRAM
E-6	ELECTRICAL MCC ELEVATION
E-7	PUMP ELEMENTARY DIAGRAM
E-8	CONTROL PANEL ELEVATION AND BACKPAN LAYOUT
E-9	CONTROL PANEL WIRING AND LAYOUT
E-10	BUILDING POWER PLAN
E-11	LIGHTING AND RECEPTACLE PLAN
E-12	SITE ELECTRICAL PLAN
E-13	ELECTRICAL DETAILS #1
E-14	ELECTRICAL DETAILS #2

LANDSCAPING

SHEET NO.	TITLE
L-1	TREE AND SHRUB LAYOUT PLAN AND NOTES
L-2	SPRINKLER IRRIGATION PLAN AND NOTES
L-3	LANDSCAPE & SPRINKLER IRRIGATION DETAILS

MECHANICAL

SHEET NO.	TITLE
M-1	PUMP AND CHEMICAL BUILDING ARRANGEMENT
M-2	PLUMBING AND CONDUIT PIPING ARRANGEMENT
M-3	STATION PIPING
M-4	MECHANICAL DETAILS
M-5	MECHANICAL DETAILS
M-6	MECHANICAL DETAILS
M-7	MECHANICAL DETAILS
M-8	CHEMICAL ROOM DETAILS
M-9	CHEMICAL ROOM DETAILS
M-10	MECHANICAL DETAILS
M-11	ANALYZER CONNECTION AND DETAILS
M-12	VENTILATION PLAN

STRUCTURAL

SHEET NO.	TITLE
S-1	GENERAL NOTES AND DETAILS
S-2	FOUNDATION PLAN, ROOF FRAMING PLAN AND NOTES
S-3	DETAILS
S-4	EXTERIOR ELEVATIONS AND SCHEDULES
S-5	REMOVABLE ROOF DETAILS

NOTE:

SITE IRRIGATION AND LANDSCAPING BY OTHERS.

DATE: November 2008

LINE IS 2 INCHES AT FULL SIZE (IF NOT 2"-SCALE ACCORDINGLY)

FILE G-3.dwg
DRAWN TAD
DESIGNED TAD
CHECKED WAG
CHECKED

REGISTERED PROFESSIONAL ENGINEER JOSEPH C. SCALMANINI No. 28233 Exp. 3-31-2010 CIVIL STATE OF CALIFORNIA

LUHDORFF & SCALMANINI CONSULTING ENGINEERS

REVISIONS

ZONE	REV.	DESCRIPTION	BY	DATE	APP.

SACRAMENTO SUBURBAN WATER DIST.
VERNER AVENUE
WELL AND TREATMENT FACILITIES

SUBMITTED: _____ DATE: _____
SUBMITTAL APPROVED: _____ DATE: _____

INDEX OF DRAWINGS

SCALE N.T.S.

DRAWING NUMBER G-3

SHEET NUMBER 3 OF 52

CAD FILE: G:/Projects/Sacramento Suburban W D/07-3-075/BID_SET/G-3.dwg CFG FILE: LSCE2500.PCP_MRG DATE: 12-08-08 11:37am

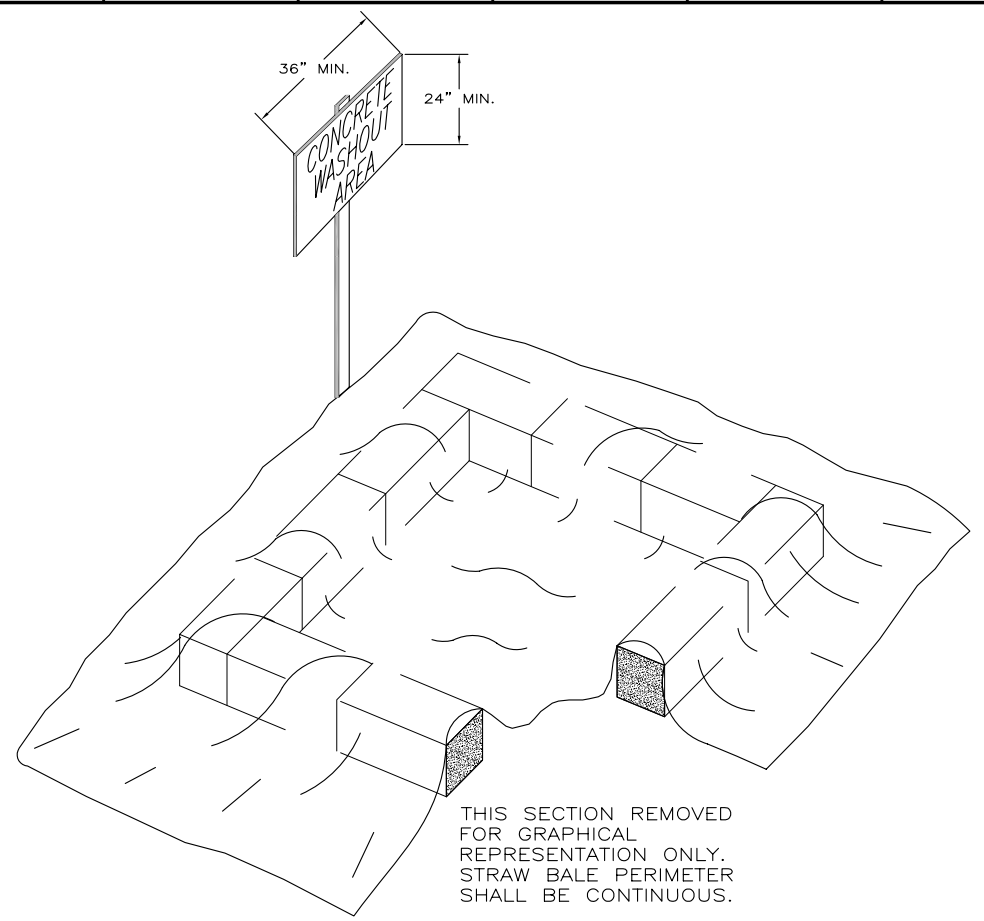

CONCRETE WASHOUT BASIN (A/--)

N.T.S.

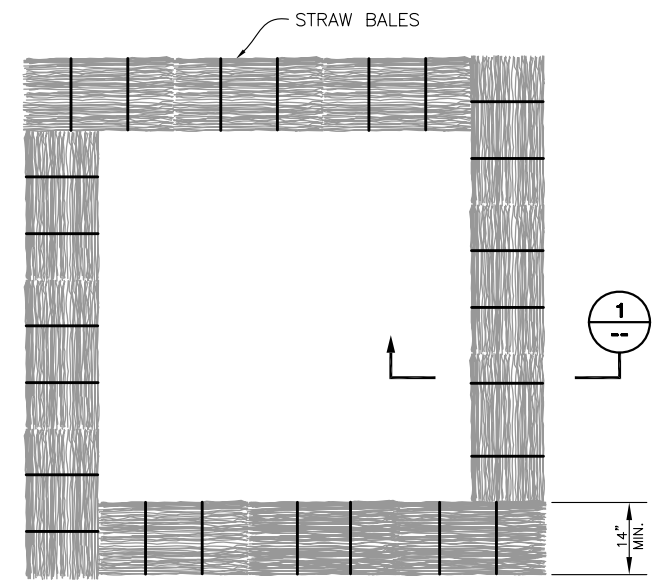

CONCRETE WASHOUT BASIN - PLAN (B/--)

N.T.S.

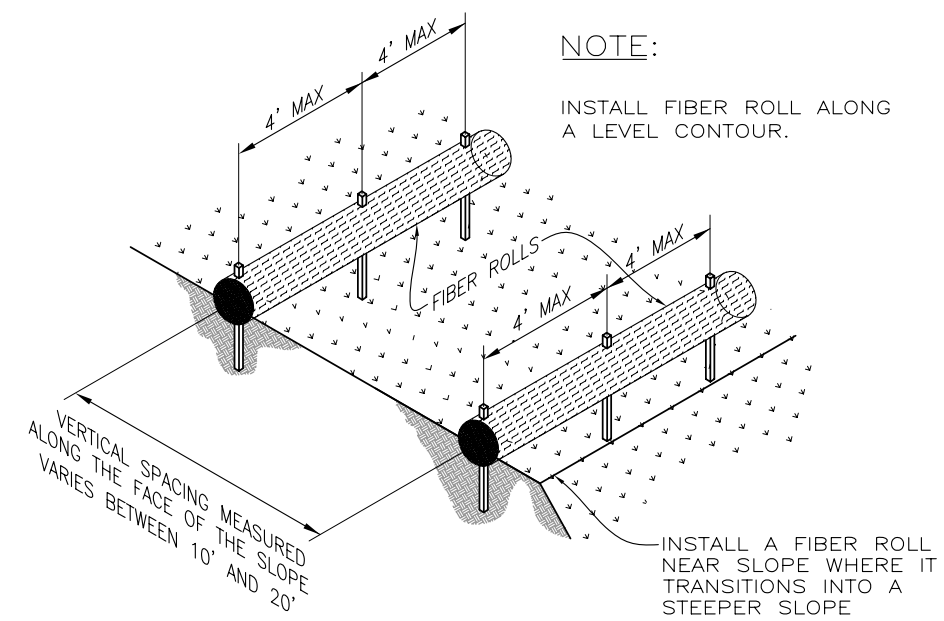

NOTE:

INSTALL FIBER ROLL ALONG A LEVEL CONTOUR.

TYPICAL FIBER ROLL INSTALLATION (C/--)

N.T.S.

GRAVEL BAG(S) OR OTHER ACCEPTED SEDIMENT CONTROL BMP. PLACE BAGS TIGHT AGAINST FACE OF CURB.

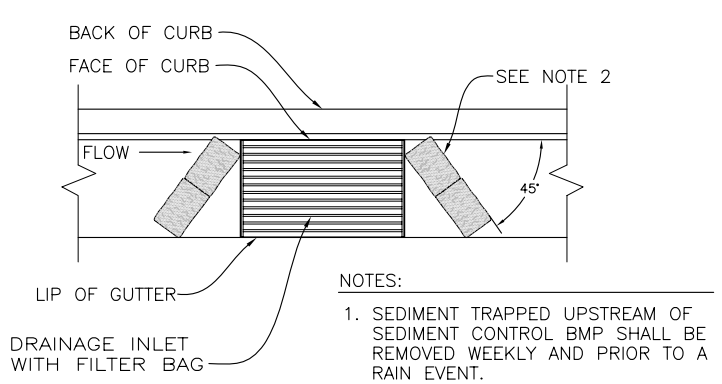

NOTES:

1. SEDIMENT TRAPPED UPSTREAM OF SEDIMENT CONTROL BMP SHALL BE REMOVED WEEKLY AND PRIOR TO A RAIN EVENT.
2. PLACE BMP'S TIGHTLY TOGETHER AT JOINTS TO PREVENT OR MINIMIZE SEEPAGE AT JOINTS

STORM DRAIN INLET SEDIMENT CONTROL (D/--)

N.T.S.

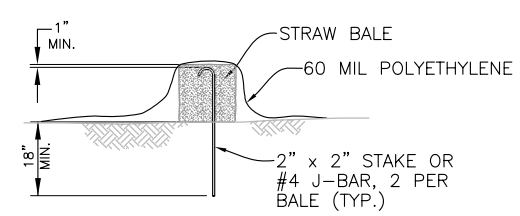

SECTION (1/--)

N.T.S.

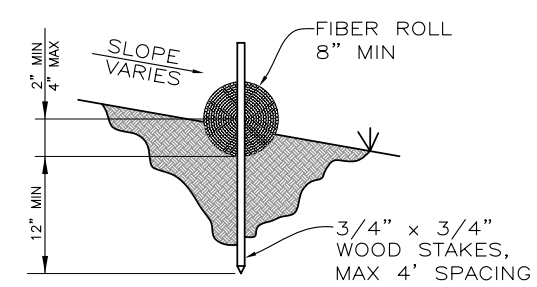

FIBER ROLL ENTRENCHMENT DETAIL (E/--)

N.T.S.

DATE: November 2008

LINE IS 2 INCHES AT FULL SIZE (IF NOT 2"–SCALE ACCORDINGLY)

FILE G-4.dwg
DRAWN TAD
DESIGNED TAD
CHECKED WG
CHECKED

REGISTERED PROFESSIONAL ENGINEER JOSEPH C. SCALMANINI No. 28233 Exp. 3-31-2010 CIVIL STATE OF CALIFORNIA

LUHDORFF & SCALMANINI CONSULTING ENGINEERS

REVISIONS

ZONE	REV.	DESCRIPTION	BY	DATE	APP.

SACRAMENTO SUBURBAN WATER DIST.
VERNER AVENUE
WELL AND TREATMENT FACILITIES

SUBMITTED: _____ DATE: _____
SUBMITTAL APPROVED: _____ DATE: _____

EROSION CONTROL DETAIL I

SCALE N.T.S.

DRAWING NUMBER G-4

SHEET NUMBER 4 OF 52

CAD FILE: G:/Projects/Sacramento Suburban W D/07-3-075/BID_SET/G-4.dwg CFG FILE: LSCE2500.PCP_MRG DATE: 11-25-08 10:54am

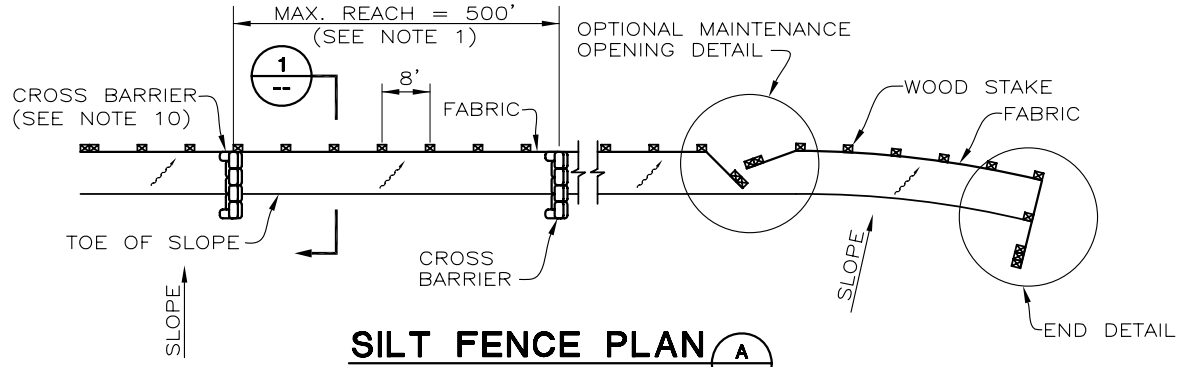

SILT FENCE PLAN (A)
N.T.S.

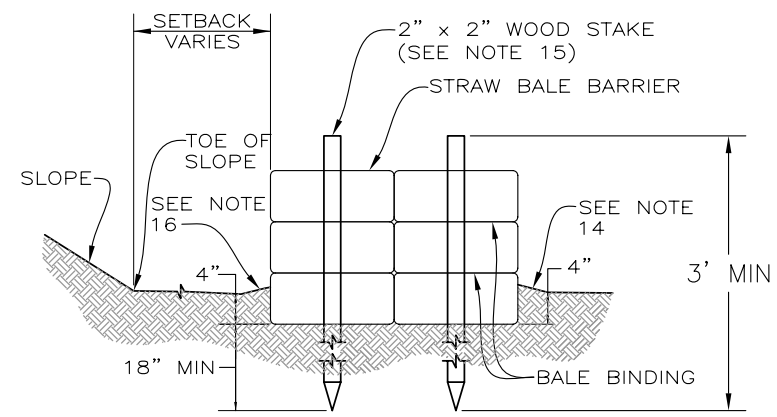

STRAW BALE BARRIER
CROSS SECTION

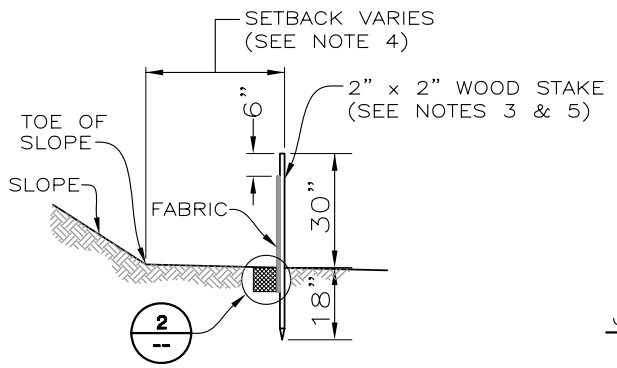

SECTION (1)

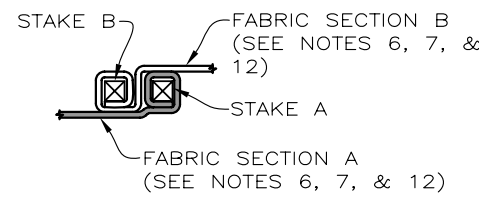

JOINING SECTION DETAIL
(TOP VIEW)

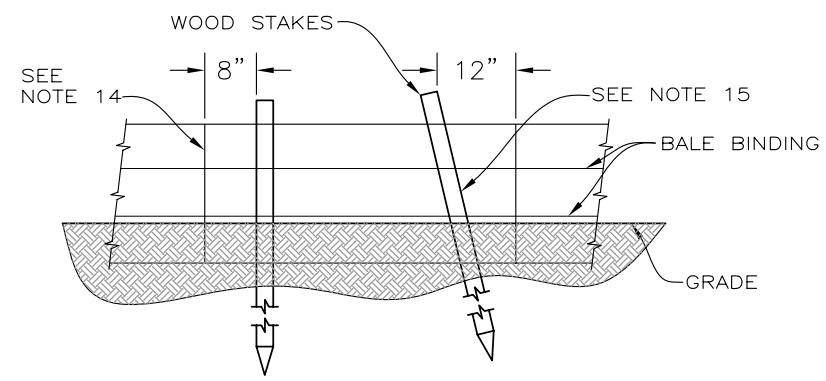

STRAW BALE BARRIER
PROFILE

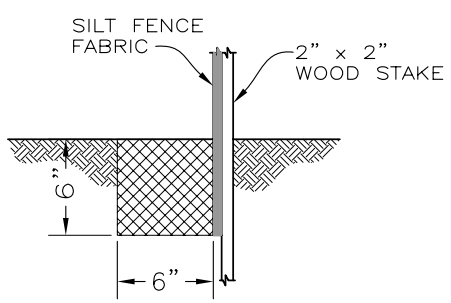

DETAIL (2)

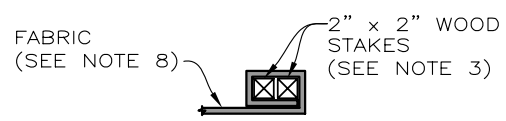

END STAKE DETAIL
(TOP VIEW)

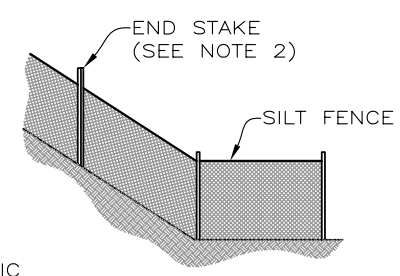

END DETAIL

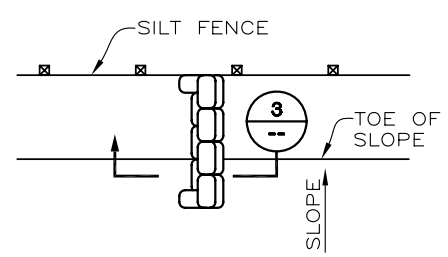

CROSS BARRIER DETAIL (B)

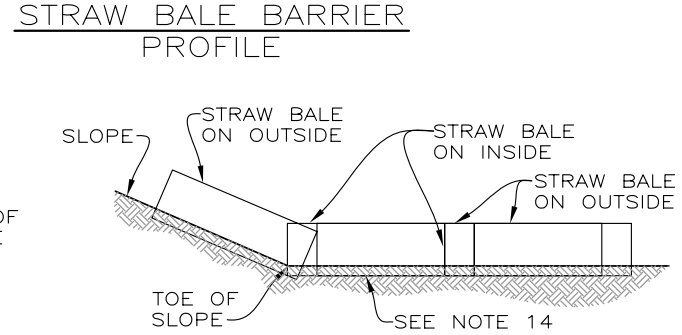

STRAW BALE BARRIER
END DETAIL

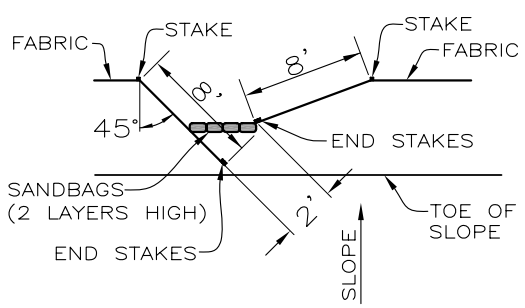

OPTIONAL MAINTENANCE
OPENING DETAIL
(SEE NOTE 11)

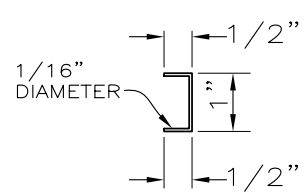

STAPLE DETAIL
(SEE NOTE 9)

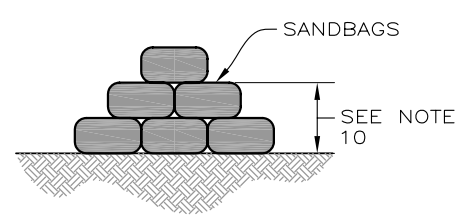

SAND BAG DETAIL (3)
N.T.S.

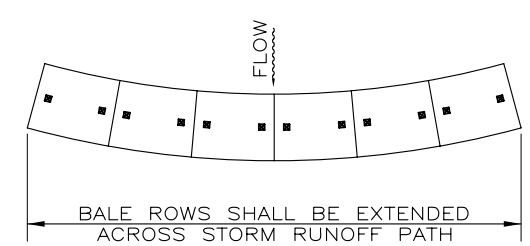

PLAN

STRAW BALE BARRIER DETAIL (C)
N.T.S.

GENERAL NOTES

1. CONSTRUCT THE LENGTH OF EACH REACH SO THAT THE CHANGE IN BASE ELEVATION ALONG THE REACH DOES NOT EXCEED 1/3 THE HEIGHT OF THE LINEAR BARRIER, IN NO CASE SHALL THE REACH LENGTH EXCEED 500'.
2. THE LAST 8'–0" OF FENCE SHALL BE TURNED UP SLOPE.
3. STAKE DIMENSIONS ARE NOMINAL.
4. DIMENSION MAY VARY TO FIT FIELD CONDITION.
5. STAKES SHALL BE SPACED AT 8'–0" MAXIMUM AND SHALL BE POSITIONED ON DOWNSTREAM SIDE OF FENCE.
6. STAKES TO OVERLAP AND FENCE FABRIC TO FOLD AROUND EACH STAKE ONE FULL TURN. SECURE FABRIC TO STAKE WITH
7. FOUR STAPLES.
8. STAKES SHALL BE DRIVEN TIGHTLY TOGETHER TO PREVENT POTENTIAL FLOW–THROUGH OF SEDIMENT AT JOINT. THE TOPS OF THE STAKES SHALL BE SECURED WITH WIRE.
9. FOR END STAKE, FENCE FABRIC SHALL BE FOLDED AROUND TWO STAKES ONE FULL TURN AND SECURED WITH FOUR STAPLES.
10. MINIMUM FOUR STAPLES PER STAKE. DIMENSIONS SHOWN ARE TYPICAL.
11. CROSS BARRIERS SHALL BE A MINIMUM OF 1/3 AND A MAXIMUM OF 1/2 THE HEIGHT OF THE LINEAR BARRIER.
12. MAINTENANCE OPENINGS SHALL BE CONSTRUCTED IN A
13. MANNER TO ENSURE SEDIMENT REMAINS BEHIND SILT FENCE.
14. JOINING SECTIONS SHALL NOT BE PLACED AT SUMP LOCATIONS.
15. SANDBAG ROWS AND LAYERS SHALL BE OFFSET TO ELIMINATE GAPS.
16. PLACE BALES IN 4 INCH DEEP TRENCH ALONG THE CONTOUR OF THE SLOPE IN THE SHAPE OF AN ARC WITH THE ENDS UPHILL OF THE ARC'S CENTER. BALES SHALL BE PLACED SO THAT THE BINDINGS ARE HORIZONTAL. MAXIMUM SPACING
17. BETWEEN ROWS SHALL BE 30 FEET.

BALES SHALL BE ANCHORED BY TWO 2" x 2" STAKES DRIVEN THROUGH THE BALE AND INTO THE GROUND A MINIMUM DEPTH OF 18 INCHES. THE FIRST STAKE IN EACH BALE SHALL BE DRIVEN AT AN ANGLE TOWARDS THE PREVIOUSLY LAID BALE TO FORCE THE BALES TIGHTLY TOGETHER.

AFTER BALES ARE STAKED IN PLACE, EXCAVATED SOIL SHALL BE BACK FILLED AGAINST THE UPHILL SIDE TO A MINIMUM HEIGHT OF 4 INCHES.

CONTRACTOR SHALL INSPECT BALES WEEKLY AND AFTER EACH RAINFALL. REPAIRS SHALL BE MADE AS NECESSARY AND SEDIMENT SHALL BE REMOVED WHEN IT HAS ACCUMULATED TO A DEPTH OF 6 INCHES. BALES SHALL BE REPLACED WHEN THEY HAVE BEEN DAMAGED, COLLAPSED OR DECOMPOSED.

LEGEND

- TAMPED BACKFILL
- SLOPE DIRECTION
- DIRECTION OF FLOW

DATE: November 2008

LINE IS 2 INCHES AT FULL SIZE (IF NOT 2"–SCALE ACCORDINGLY)

FILE G–5.dwg
DRAWN TAD
DESIGNED TAD
CHECKED WG
CHECKED

REGISTERED PROFESSIONAL ENGINEER JOSEPH C. SCALMANINI No. 28233 Exp. 3-31-2010 CIVIL STATE OF CALIFORNIA

LUHDORFF & SCALMANINI CONSULTING ENGINEERS

REVISIONS

ZONE	REV.	DESCRIPTION	BY	DATE	APP.

SACRAMENTO SUBURBAN WATER DIST.
VERNER AVENUE
WELL AND TREATMENT FACILITIES

SUBMITTED: _____ DATE: _____
SUBMITTAL APPROVED: _____ DATE: _____

EROSION CONTROL DETAIL II

SCALE N.T.S.
DRAWING NUMBER G-5
SHEET NUMBER 5 OF 52

CAD FILE: G:/Projects/Sacramento Suburban W D/07–3–075/BID_SET/G–4.dwg CFG FILE: LSCE2500.PCP_MRG DATE: 11–25–08 10:55am

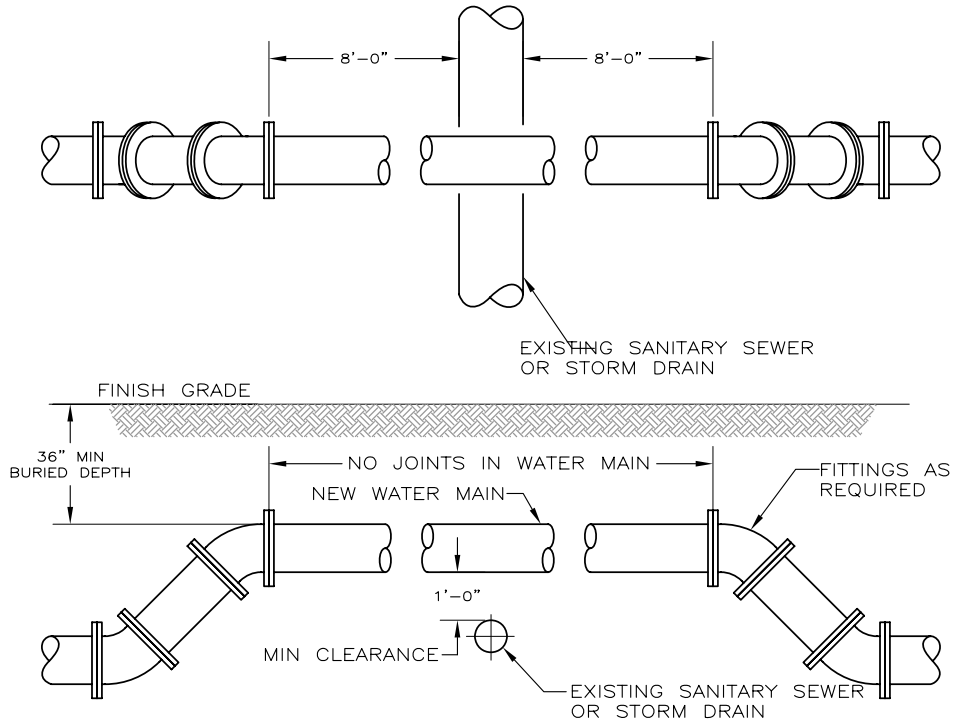

NEW WATER MAIN CROSSING DETAIL W/EXISTING SANITARY SEWER OR STORM DRAIN

N.T.S.

A --

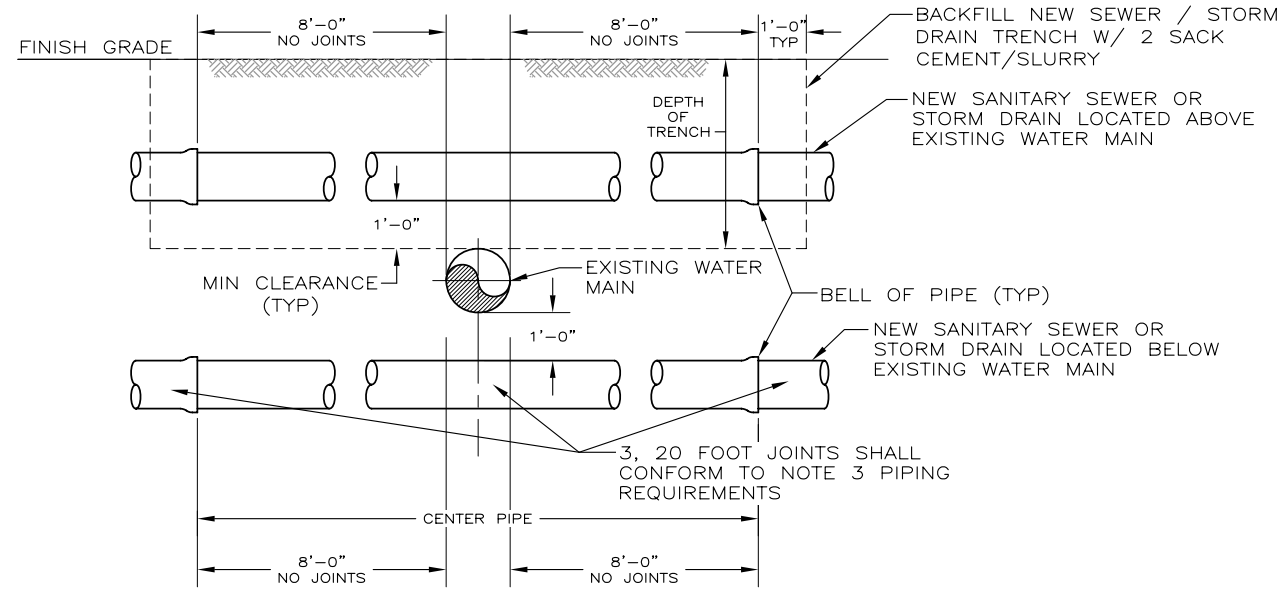

NEW SEWER / STORM DRAIN PIPE CROSSING DETAIL W/EXISTING WATER MAIN

N.T.S.

B --

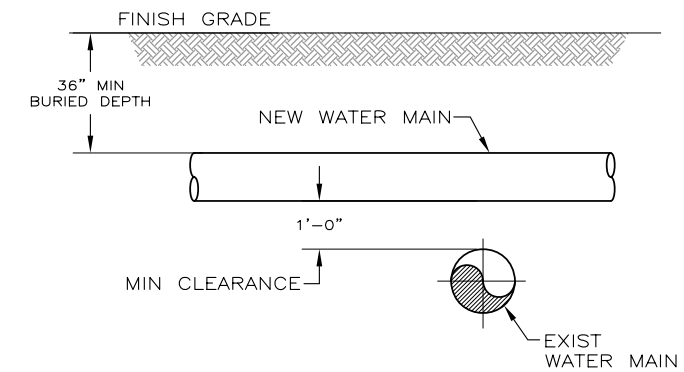

NEW WATER MAIN CROSSING DETAIL W/EXISTING WATER MAIN

N.T.S.

C C-1

NOTE:

1. ALL NOTED CLEARANCES ARE FROM EDGE OF PIPE, NOT CENTERLINE OF PIPE. CLEARANCES ONLY VALID FOR PIPE UP TO 24 INCHES IN DIAMETER.
2. NONE OF THESE DETAILS ARE INTENDED TO AMEND OR SUPERCEDE ANY PORTION OF CHAPTER 16 OF TITLE 22, CALIFORNIA CODE OF REGULATIONS, SUCH CHAPTER HAVING BEEN ADOPTED "EFFECTIVE MARCH 9, 2008 (OR THE LATEST AMENDMENT THERETO). SAID DOCUMENTS COMMONLY REFERED TO AS THE "WATERWORKS STANDARDS".
3. WHERE SEWER CROSSES ABOVE NEW OR EXISTING WATER MAIN, WATER MAIN SHALL BE EITHER DUCTILE IRON PIPE WITH HOT DIP BITUMINOUS COATING OR CLASS 200 PVC, C900-97 OR C905-97, AT THE DIRECTION OF THE ENGINEER.

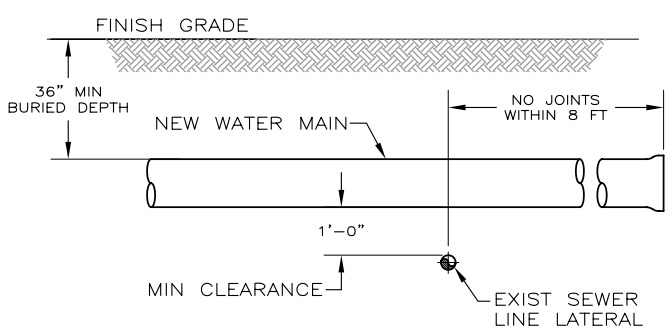

NEW WATER MAIN CROSSING DETAIL W/EXISTING SEWER LATERAL / MAIN DEEPER THAN NEW WATER MAIN

N.T.S.

D C-1

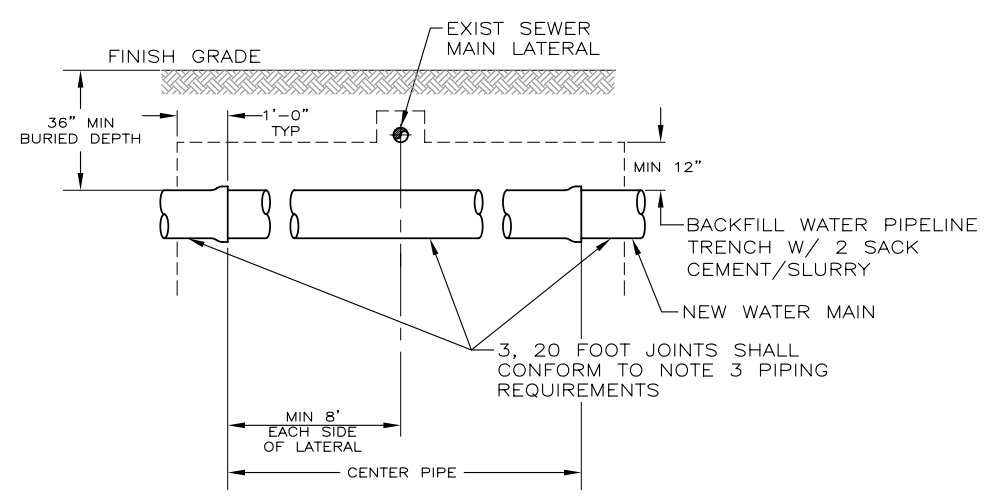

NEW WATER MAIN CROSSING DETAIL W/EXISTING SEWER LATERAL / MAIN HIGHER THAN NEW WATER MAIN

N.T.S.

E C-1

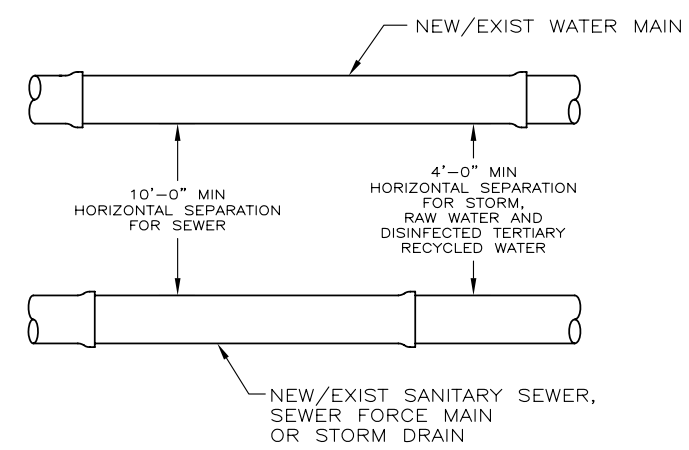

NOTE: PIPES SHALL NOT BE IN A COMMON TRENCH

PARALLEL SEWER / STORM DRAIN W/NEW OR EXISTING WATER MAIN

N.T.S.

F --

DATE: November, 2008

LINE IS 2 INCHES AT FULL SIZE (IF NOT 2"-SCALE ACCORDINGLY)

FILE G-6.DWG
DRAWN TAD
DESIGNED TAD
CHECKED WAG
CHECKED

REGISTERED PROFESSIONAL ENGINEER JOSEPH C. SCALMANINI No. 28233 Exp. 3-31-2010 CIVIL STATE OF CALIFORNIA

LUHDORFF & SCALMANINI CONSULTING ENGINEERS

REVISIONS

ZONE	REV.	DESCRIPTION	BY	DATE	APP.

SACRAMENTO SUBURBAN WATER DIST.
VERNER AVENUE WELL AND TREATMENT FACILITIES

SUBMITTED: _____ DATE: _____
SUBMITTAL APPROVED: _____ DATE: _____

SEWER/PIPELINE CROSSING DETAILS, WATER MAIN PIPELINE INSTALLATION DETAILS

SCALE N.T.S.
DRAWING NUMBER G-6
SHEET NUMBER 6 OF 52

CAD FILE: G:/Projects/Sacramento Suburban WD/07-3-075/BID_SET/G-6.dwg CFG FILE: LSCE2500.PCP_MRG DATE: 11-25-08 10:57am

VERNER TEST HOLE LITHOLOGY

Depth	Description
0'	Silty Sandy Clay – medium plastic, fine to coarse sands, brown w/small gravel
20'	Silty Clay – low plastic, tan
55'	Clayey Sand/Sandy Clay – fine to medium sands, medium plastic, brown/tan with red and gray clay streaks
133'	Sand – fine to coarse, granitic, tan
138'	Silty Sandy Clay – medium plastic, brown w/silt stringers and hard streaks
190'	Silty Clay – low plastic, reddish brown w/high plastic streaks
222'	Sand – fine to coarse, tan
228'	Silty Clay – low plastic, brown w/mudstone
240'	Sand – fine to coarse, black,
260'	Silty Sandy Clay – low plastic, fine sand, tan w/reddish brown streaks
313'	Clay – medium plastic, reddish brown
338'	Sand – fine to coarse, black
371'	Clayey Sand and Gravel – fine to coarse, small gravel, brown
380'	Sand – fine to coarse, black, hard
392'	Clayey Sand and Gravel – fine to coarse sand, small gravel, black w/mudstone
404'	Sand – fine to coarse, black w/mudstone and possible cobbles, hard
452'	Clayey Sand – fine to coarse, black, w/mudstone
465'	Sand – fine to coarse, black, hard
485'	Cemented Sand and Gravel – fine to coarse sands, gravel and possible cobbles, black, hard
565'	Clay and Mudstone – high plastic, grey/black
575'	Cemented Sand and Gravel – fine to coarse sands, gravel and possible cobbles, black, hard
590'	Clay – medium plastic, grey/green
600'	

VERNER TEST HOLE ELECTRIC LOG

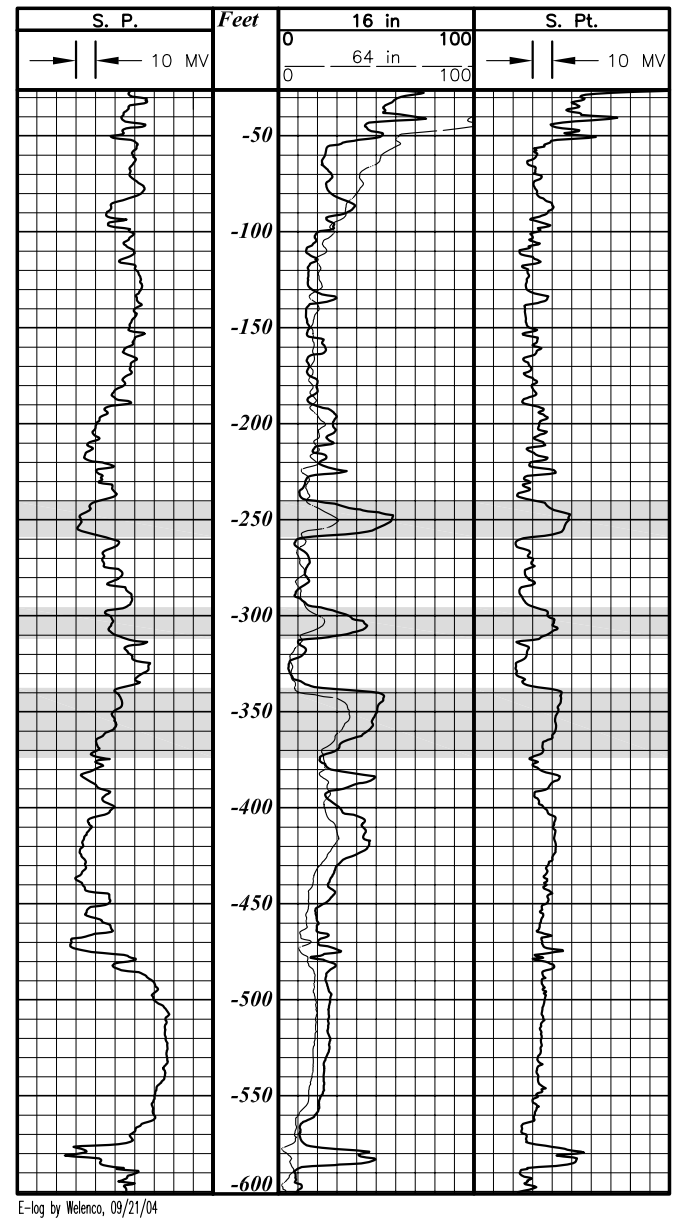

E-log by Welenco, 09/21/04

VERNER PRODUCTION/ASR WELL PROFILE

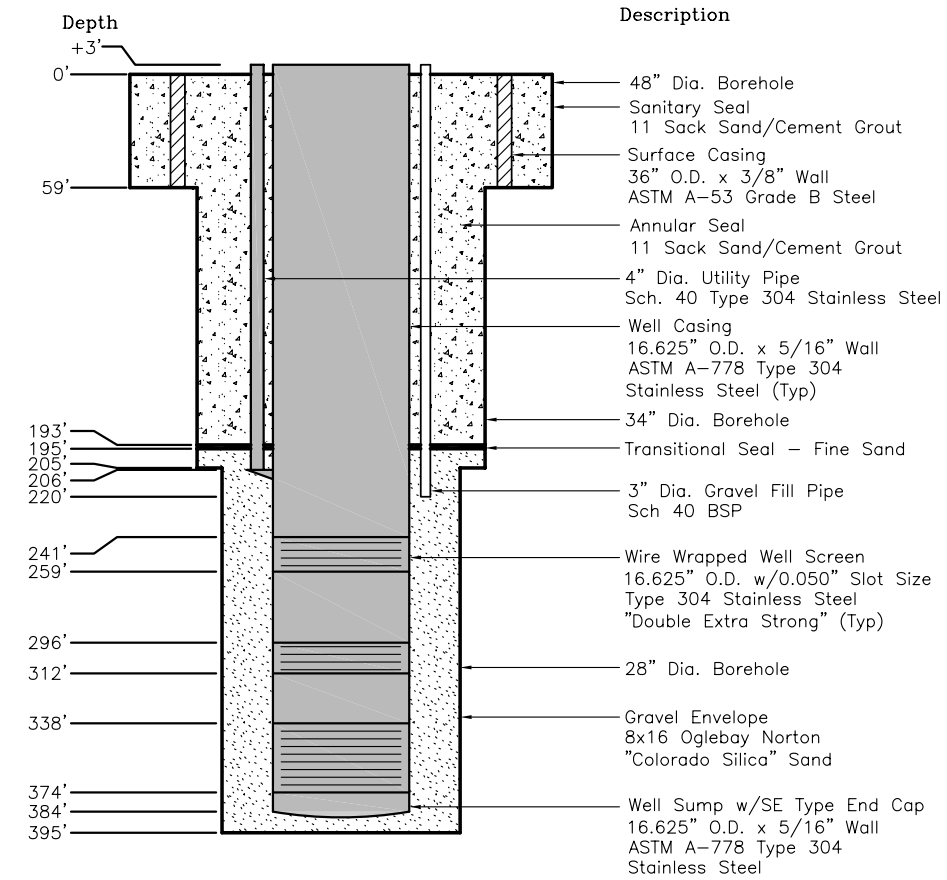

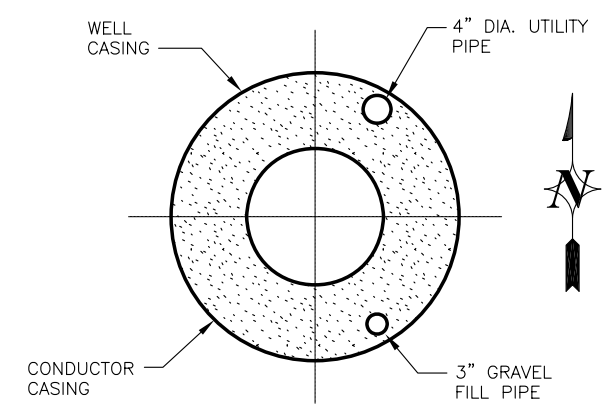

SOUNDING PIPE ORIENTATION

AS-BUILT

DATE: November 2008

LINE IS 2 INCHES AT FULL SIZE (IF NOT 2"–SCALE ACCORDINGLY)

FILE G-7.dwg
DRAWN DWT
DESIGNED ASL
CHECKED TDE
CHECKED

REGISTERED PROFESSIONAL ENGINEER JOSEPH C. SCALMANINI No. 28233 Exp. 3-31-2010 CIVIL STATE OF CALIFORNIA

LUHDORFF & SCALMANINI CONSULTING ENGINEERS

REVISIONS

ZONE	REV.	DESCRIPTION	BY	DATE	APP.

SACRAMENTO SUBURBAN WATER DIST.
VERNER AVENUE
WELL AND TREATMENT FACILITIES

SUBMITTED: _____ DATE: _____
SUBMITTAL APPROVED: _____ DATE: _____

PRODUCTION/ASR WELL PROFILE

SCALE N.T.S.

DRAWING NUMBER G-7

SHEET NUMBER 7 OF 52

CAD FILE: G:/Projects/Sacramento Suburban W D/07-3-075/BID_SET/G-7.dwg CFG FILE: LSCE2500.PCP_MRG DATE: 11-25-08 10:59am

GREENBACK WOODS PARK

Scale in Feet
0' 15' 30' 60'

NOTE:
"NO DUMPING–FLOWS TO CREEK" SHALL BE STAMPED IN THE CONCRETE AT ALL DROP INLETS.

(E) SANITARY SEWER M/H 211–074–010
(E) STORM DRAIN M/H 372–191–M22
DI
(E) STORM DRAIN M/H 372–191–482
(E) STORM DRAIN
℄ FLAMING ARROW DRIVE
E/P
TIE –IN (N) 15" STORM DRAIN TO EXISTING MANHOLE AT INV. EL.125.67± (SEE "NO DUMPING" NOTE)
CONTRACTOR TO VERIFY DEPTH AND LOCATION OF EXIST 16" WATERMAIN AT SD CROSSING
TIE–IN NEW CURB AND SIDEWALK TO EXISTING
(N) MANUAL 20' CHAIN LINK ROLLING GATE, SEE DETAIL B, SHEET C–9
P/L
STREET LIGHT STANDARD SEE DETAIL E, SHEET C–7
225.17'
(E) UTILITY POLES (3 PLACES) TO BE RELOCATED (BY OTHERS)
(N) POST AND WIRE FENCE, SEE DETAIL D, SHEET C–9
(N) STORM DRAIN MANHOLE SEE DETAIL D, SHEET C–6 (SEE "NO DUMPING" NOTE) RIM EL 132.80 INV EL 126.00
SMUD TRANSFORMER, PAD AND BOLLARDS PER SMUD STANDARDS
INSTALL REMOVABLE CHAIN WITH PADLOCK AT ENTRANCE TO TRANSFORMER
℄ TRANSFORMER PAD
(E) FENCE TO BE REMOVED
TIE–IN (N) 20" WATER TO (E) 16" WATER MAIN. SEE DETAIL C, SHEET M–10
(N) STORM DRAIN MANHOLE SEE DETAIL D, SHEET C–6 (SEE "NO DUMPING" NOTE) RIM EL 143.08 INV EL 130.00
EXISTING EDGE OF PAVEMENT
R/W
℄ VERNER AVENUE.
(E) FH
20" DIP (N)
SEE TYP TRENCH DETAIL A, SHEET C–3
20" CONNECTION FOR FUTURE BOOSTER PUMPS. SEE DETAIL D, SHEET M–10
12" DIP MAINLINE (N)
A M-11 ANALYZER CONNECTION
C C-4 BOLLARDS (4 REQD)
SEE "NO DUMPING" NOTE
FUTURE RETAINING WALL
12" CONNECTIONS FOR FUTURE FILTERS. SEE DETAIL B, SHEET M–10
FUTURE BOOSTER PUMP & FILTER BUILDING
GENERATOR PAD 13' x 29', SEE "S" SHEETS
BOLLARDS (4 REQD) D C-4
PROPOSED WELL AND PUMPHOUSE
DHS REGULATORY CLEARANCES
(N) ASPHALTIC CONCRETE SERVICE ROAD
PROPERTY LINE TO SOUTHEAST CORNER OF BUILDING
(N) 2" SANITARY SEWER
(N) MANGATE, SEE DETAIL C, SHEET C–9
STREET LIGHT STANDARD SEE DETAIL E, SHEET C–7
R50.0' MINIMUM SMFD TURNING RADIUS
DRAIN BOX B C-5
(E) POLE (TYP)
(E) GRAVEL DRIVEWAY
C C-4 BOLLARDS (4 REQD)
EXISTING FENCE TO BE REMOVED
FIRE DEPARTMENT TURNAROUND, SEE DETAIL D, SHEET C–3
(N) CHAIN LINK ROLLING GATE, SEE DETAIL A, SHEET C–9
(N) 6" SANITARY SEWER
(N) 8' HIGH CHAIN LINK FENCE, SEE DETAIL B, SHEET C–9
(E) GATE
(N) POST AND WIRE FENCE, SEE DETAIL D, SHEET C–9
SSWD SIGN SEE DETAIL A, SHEET C–11
INSTALL COMMERCIAL DRIVEWAY PER DETAIL A, SHEET C–7
(E) BLOW–OFF TO BE RELOCATED PER SSWD STANDARDS
(E) WATER METER TO BE RELOCATED AND USED FOR LANDSCAPING
(E) 16"Ø WATER MAIN
(N) SIDEWALK, CURB AND GUTTER PER SECTION C, SHEET C–7
TIE–IN NEW CURB AND SIDEWALK TO EXISTING
(N) S.S. MANHOLE. SEE DETAIL C, SHEET C–6 RIM EL 144.35 INV EL 137.35
(E) SOUND WALL
(E) SANITARY SEWER
(E) SANITARY SEWER M/H 229–097–016
℄ GOLDENWOOD CIRCLE
INTERSTATE 80

CAD FILE: G:/Projects/Sacramento Suburban W D/07-3-075/BID_SET/C-1.dwg CFG FILE: LSCE2500.PCP_MRG DATE: 11-25-08 11:03am

DATE: November 2008

LINE IS 2 INCHES AT FULL SIZE (IF NOT 2"–SCALE ACCORDINGLY)

FILE C-1.dwg
DRAWN TAD
DESIGNED TAD
CHECKED WG
CHECKED

REGISTERED PROFESSIONAL ENGINEER JOSEPH C. SCALMANINI No. 28233 Exp. 3-31-2010 CIVIL STATE OF CALIFORNIA

LUHDORFF & SCALMANINI CONSULTING ENGINEERS

REVISIONS

ZONE	REV.	DESCRIPTION	BY	DATE	APP.

SACRAMENTO SUBURBAN WATER DIST.
VERNER AVENUE
WELL AND TREATMENT FACILITIES

SUBMITTED: _____ DATE: _____
SUBMITTAL APPROVED: _____ DATE: _____

SITE PLAN

SCALE 1"=30'
DRAWING NUMBER C-1
SHEET NUMBER 8 OF 52

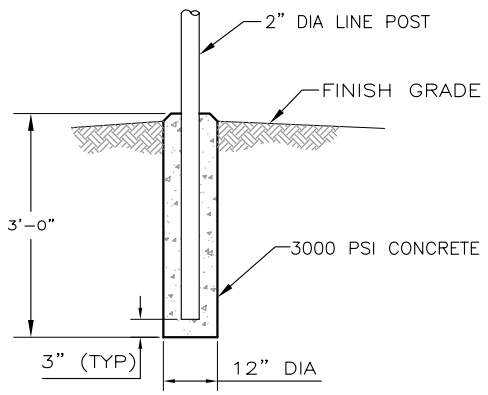

LINE POST DETAIL (A / C-9)
N.T.S.

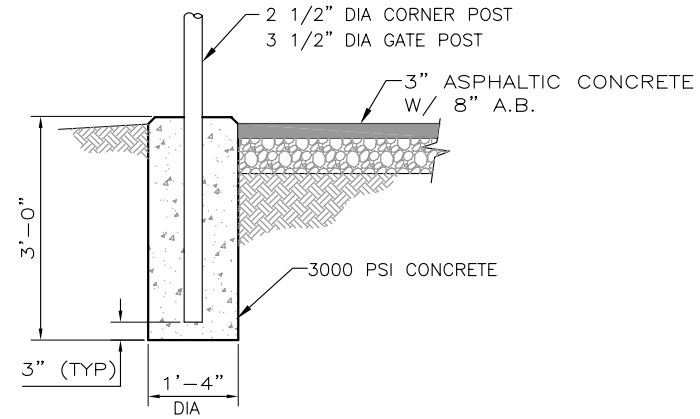

CORNER OR GATE POST DETAIL (B / C-9)
N.T.S.

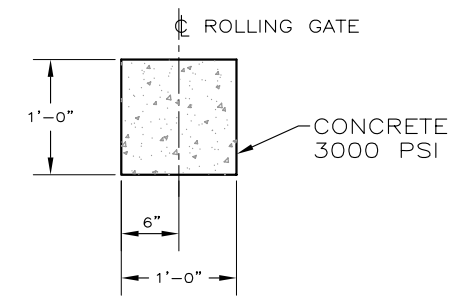

SECTION (C / C-9)
N.T.S.

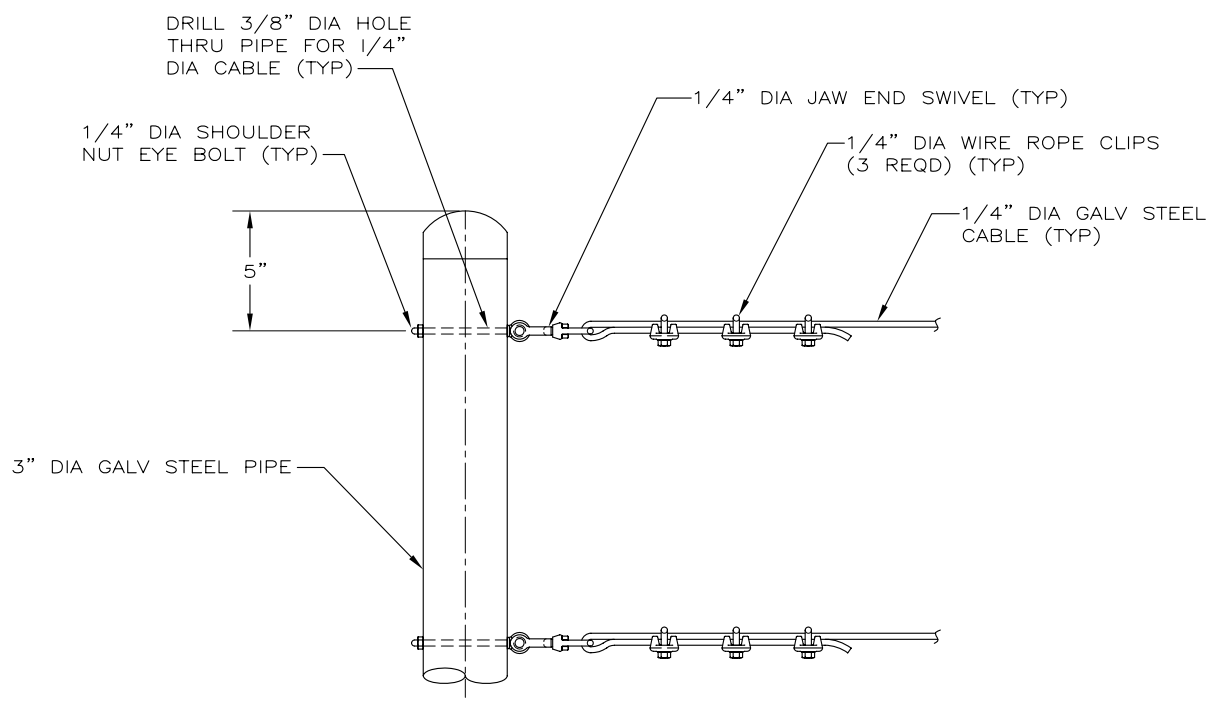

CABLE CONNECTION TO END POSTS (D / C-9)
N.T.S.

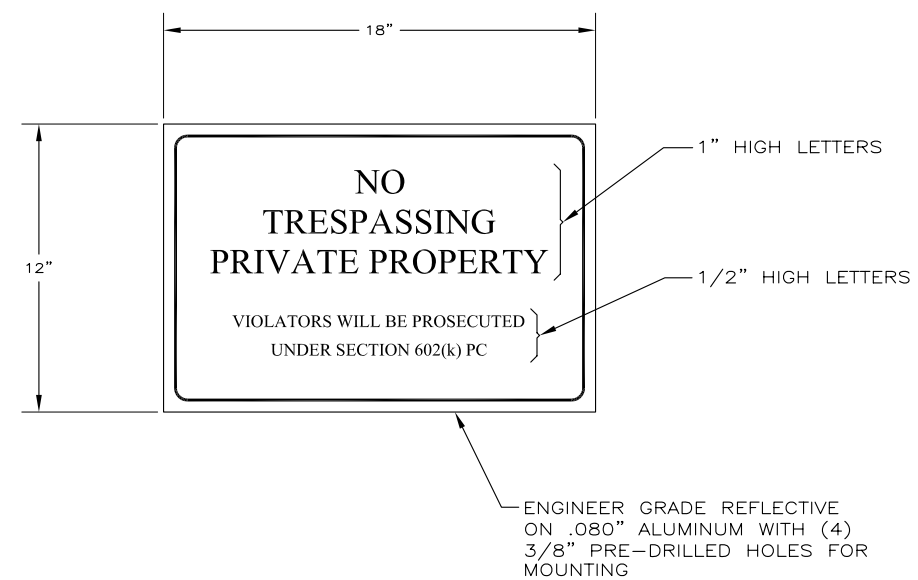

"NO TRESPASSING" SIGN (E / C-9)
N.T.S.

DATE: November 2008

LINE IS 2 INCHES AT FULL SIZE (IF NOT 2"-SCALE ACCORDINGLY)

FILE C-10.dwg
DRAWN TAD
DESIGNED TAD
CHECKED
CHECKED

REGISTERED PROFESSIONAL ENGINEER JOSEPH C. SCALMANINI No. 28233 Exp. 3-31-2010 CIVIL STATE OF CALIFORNIA

LUHDORFF & SCALMANINI CONSULTING ENGINEERS

REVISIONS

ZONE	REV.	DESCRIPTION	BY	DATE	APP.

SACRAMENTO SUBURBAN WATER DIST.
VERNER AVENUE
WELL AND TREATMENT FACILITIES

SUBMITTED: _____ DATE: _____
SUBMITTAL APPROVED: _____ DATE: _____

FENCE DETAILS

SCALE N.T.S.
DRAWING NUMBER C-10
SHEET NUMBER 16 OF 52

CAD FILE: G:/Projects/Sacramento Suburban W D/07-3-075/BID_SET/C-10.dwg CFG FILE: LSCE2500.PCP_MRG DATE: 11-25-08 11:18am

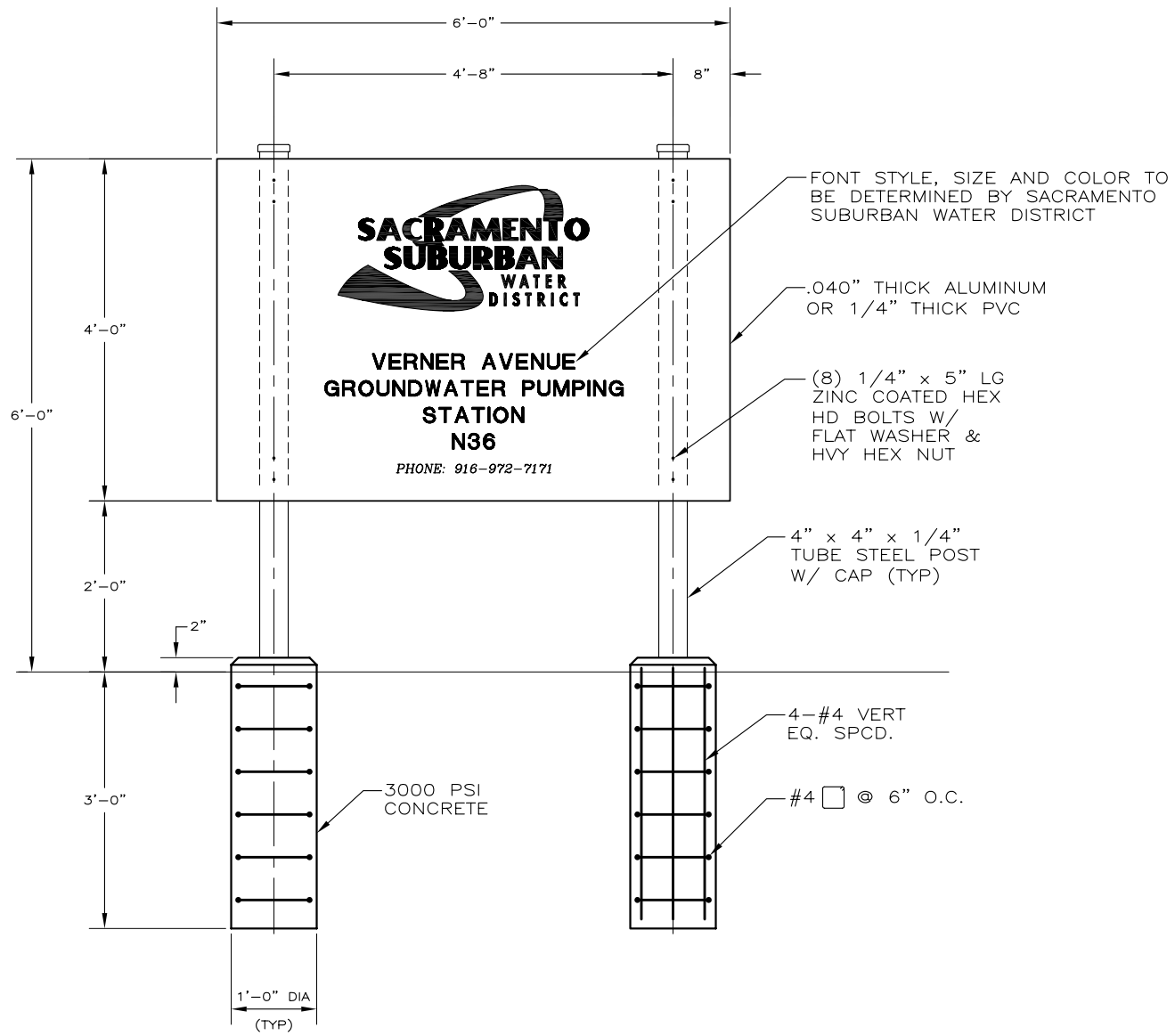

SSWD SIGN (A / C-1)

N.T.S.

DATE: November 2008

LINE IS 2 INCHES AT FULL SIZE (IF NOT 2"-SCALE ACCORDINGLY)

FILE C-11.dwg
DRAWN TAD
DESIGNED TAD
CHECKED
CHECKED

REGISTERED PROFESSIONAL ENGINEER JOSEPH C. SCALMANINI No. 28233 Exp. 3-31-2010 CIVIL STATE OF CALIFORNIA

LUHDORFF & SCALMANINI CONSULTING ENGINEERS

REVISIONS

ZONE	REV.	DESCRIPTION	BY	DATE	APP.

SACRAMENTO SUBURBAN WATER DIST.
VERNER AVENUE
WELL AND TREATMENT FACILITIES

SUBMITTED: DATE:
SUBMITTAL APPROVED: DATE:

SACRAMENTO SUBURBAN WATER DISTRICT SIGN

SCALE N.T.S.
DRAWING NUMBER C-11
SHEET NUMBER 17 OF 52

CAD FILE: G:/Projects/Sacramento Suburban W D/07-3-075/BID_SET/C-11.dwg CFG FILE: LSCE2500.PCP_MRG DATE: 11-25-08 11:19am

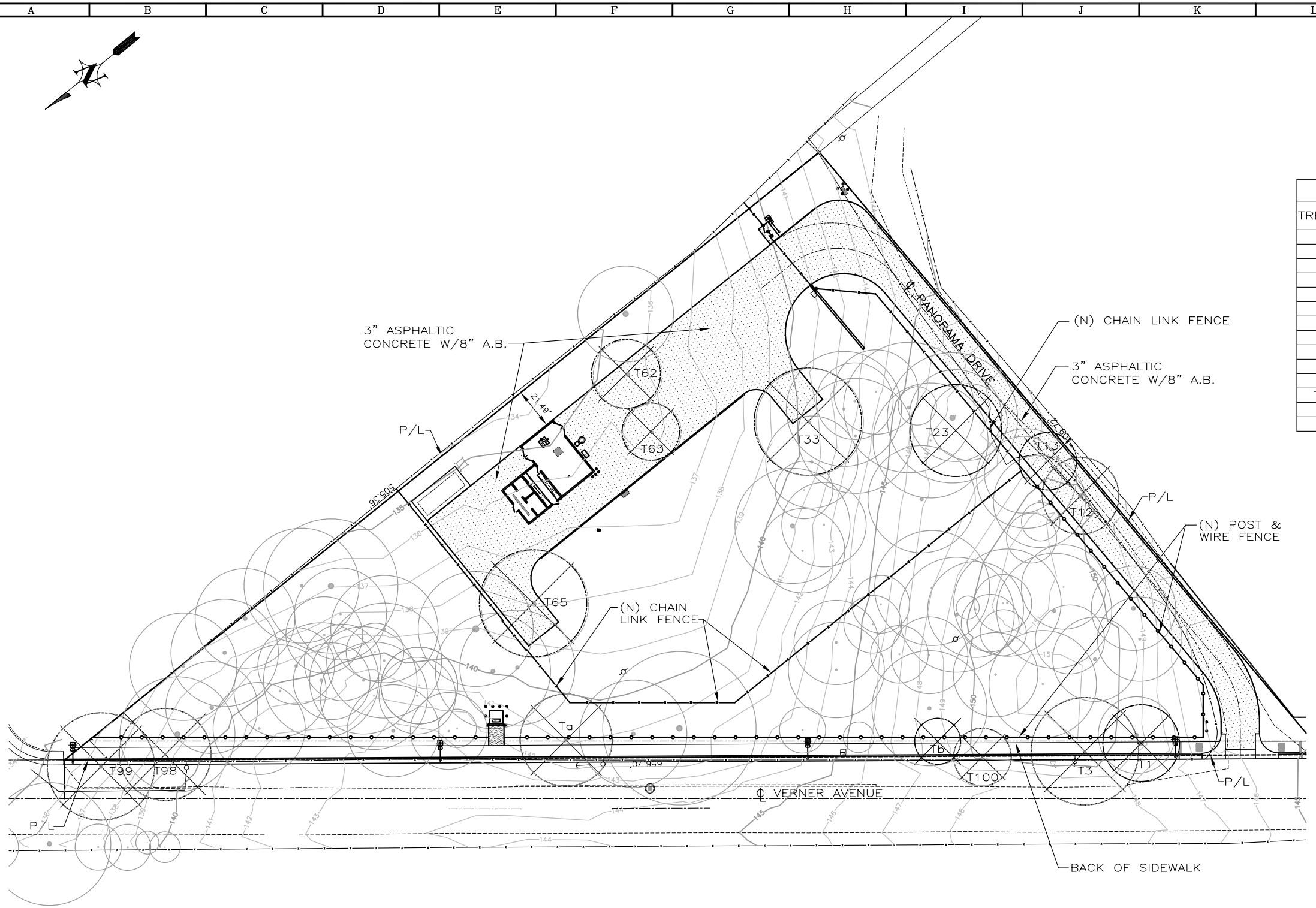

TREE REMOVAL LIST			
TREE NO.	SIZE (inches)	BOTANICAL NAME	COMMON NAME
T1	12",12",10"	Quercus wislizenii	Interior Live Oak
T3	20"	Quercus douglasii	Blue Oak
T12	6",8",9",9"	Quercus douglasii	Blue Oak
T13	7"	Quercus douglasii	Blue Oak
T23	7"	Quercus douglasii	Blue Oak
T33	20"	Quercus douglasii	Blue Oak
T62	8",10",12"	Quercus wislizenii	Interior Live Oak
T63	8",9"	Quercus suber	Cork Oak
T65	22"	Quercus douglasii	Blue Oak
T98	16"	Quercus douglasii	Blue Oak
T99	27"	Quercus douglasii	Blue Oak
T100	10"	Quercus douglasii	Blue Oak
Ta	12"		Eucalyptus
Tb	12"		Eucalyptus

NOTES:

1. CONTRACTOR SHALL USE CAUTION IN REMOVING EXISTING TREES, AS INDICATED, SO AS NOT TO DAMAGE OTHER TREES IN THE IMMEDIATE VICINITY.
2. CONTRACTOR TO REMOVE AND DISPOSE OF TREES, STUMPS AND ROOT BALLS.

DATE: November 2008

LINE IS 2 INCHES AT FULL SIZE (IF NOT 2"-SCALE ACCORDINGLY)

FILE C-12.dwg
DRAWN TAD
DESIGNED TAD
CHECKED WG
CHECKED

REGISTERED PROFESSIONAL ENGINEER JOSEPH C. SCALMANINI No. 28233 Exp. 3-31-2010 CIVIL STATE OF CALIFORNIA

LUHDORFF & SCALMANINI CONSULTING ENGINEERS

REVISIONS					
ZONE	REV.	DESCRIPTION	BY	DATE	APP.

SACRAMENTO SUBURBAN WATER DIST.
VERNER AVENUE
WELL AND TREATMENT FACILITIES

SUBMITTED: _____ DATE: _____
SUBMITTAL APPROVED: _____ DATE: _____

TREE REMOVAL PLAN

SCALE 1"=30'

DRAWING NUMBER C-12

SHEET NUMBER 18 OF 52

CAD FILE: G:/Projects/Sacramento Suburban W D/07-3-075/BID_SET/C-12.dwg CFG FILE: LSCE2500.PCP_MRG DATE: 11-25-08 11:20am

BMP INSTALLATION SCHEDULE

	EROSION & SEDIMENT CONTROL MEASURES	PHASE OF CONSTRUCTION: CLEARING & GRUBBING	CUT & FILL ACTIVITY	ROUGH CONSTRUCTION	FINISH CONSTRUCTION & LANDSCAPING
WET SEASON	HYDROSEEDING				
	STRAW MULCH	●	●		
	SOIL BINDERS				
	COVERS AND BLANKETS	●	●		
	SEDIMENT BASIN				
	SEDIMENT TRAP	●	●	●	
	DEWATERING		●	●	
WET/DRY SEASON	PRESERVE EXISTING VEGETATION	●	●	●	
	FIBER ROLLS	●	●	●	●
	DUST CONTROL	●	●	●	●
	OUTLET PROTECTION				
	SILT FENCING	●	●		
	GRAVEL BAG BARRIERS	●	●	●	●
	STORM DRAIN INLET PROTECTION	●	●	●	●
	STABILIZED CONSTRUCTION AREA	●	●		
	MATERIAL STORAGE AREA		●	●	●
	CONCRETE WASHOUT AREA			●	
	DISPOSABLE WASTE STORAGE AREA			●	●

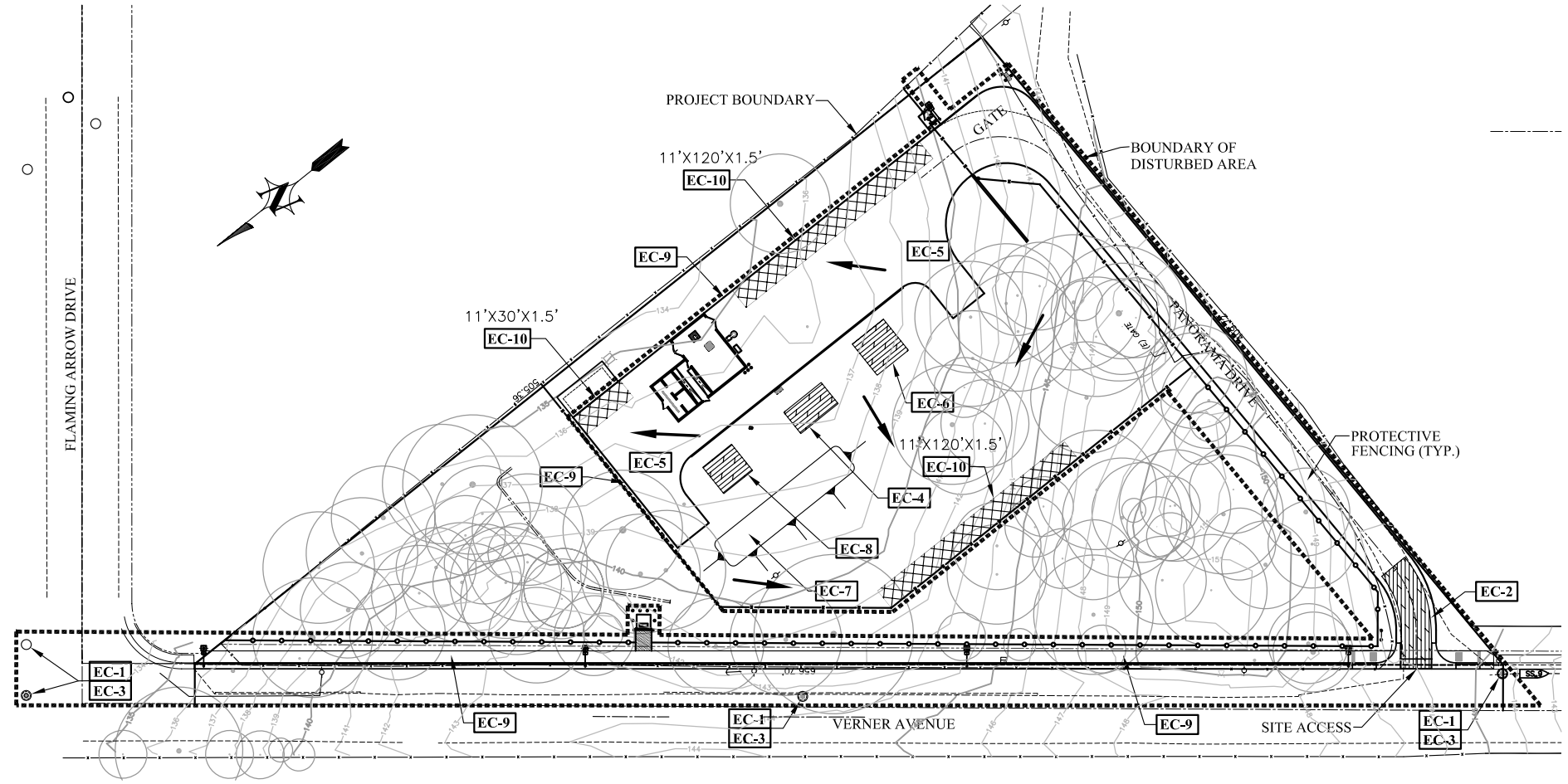

EROSION CONTROL PLAN

SCALE: 1"=40'

SWPPP BLOCK

Contact Person _____ Phone Number _____

BMP MAINTENANCE SCHEDULE

1. ALL FIBER ROLLS SHALL BE INSPECTED WEEKLY AND REPAIRED AS NEEDED TO MAINTAIN EFFICIENCY.

2. ALL INLET SEDIMENT BARRIERS SHALL BE INSPECTED AND REPAIRED WEEKLY.

3. ALL FILTER BAGS SHALL BE INSPECTED AND CLEANED OF DEBRIS DAILY.

4. DUST CONTROL SHALL BE MAINTAINED AT ALL TIMES DURING GRADING AND CONSTRUCTION.

5. INSPECT STABILIZED CONSTRUCTION ACCESS DAILY FOR DAMAGE AND EFFECTIVENESS OF PREVENTING SOIL, SEDIMENT, AND CONSTRUCTION DEBRIS FROM BEING TRACKED ONTO PUBLIC STREET. STREETS ADJACENT TO STABILIZED CONSTRUCTION ACCESS AREAS SHALL BE SWEPT DAILY TO REMOVE LOOSE MATERIALS.

6. ALL BLANKETS AND COVERS SHALL BE INSPECTED PERIODICALLY AFTER INSTALLATION.

7. INSPECT ALL PLASTIC COVER MATERIAL PLACED OVER EXPOSED SOIL AFTER SIGNIFICANT RAINFALLS. CHECK FOR EROSION AND UNDERMINING. REPAIR FAILURES IMMEDIATELY. DAMAGE TO SLOPES OR CHANNELS SHALL BE REPAIRED PRIOR TO REINSTALLING COVER.

8. INSPECT CONCRETE WASHOUTS DAILY. CONCRETE WASHOUTS SHALL BE MAINTAINED TO PROVIDE A HOLDING CAPACITY WITH A MINIMUM FREEBOARD OF 4-INCHES. HARDENED CONCRETE SHALL BE REMOVED AND DEPOSED OF PROPERLY AND THE WASHOUT FACILITIES RETURNED TO A FUNCTIONAL CONDITION.

EROSION AND SEDIMENT CONTROL NOTES:

1. ALL EROSION AND SEDIMENT CONTROL MEASURES SHALL BE CONSTRUCTED AND MAINTAINED IN ACCORDANCE WITH THE COUNTY OF SACRAMENTO IMPROVEMENT STANDARDS AND EROSION AND SEDIMENT CONTROL GUIDELINES DATED NOVEMBER 2000.

2. THE EROSION CONTROL BEST MANAGEMENT PRACTICES (BMP'S) SHALL BE INSTALLED AND MAINTAINED DURING THE WET SEASON (OCTOBER 1 THROUGH APRIL 30). SEDIMENT CONTROL BMP'S SHALL BE INSTALLED AND MAINTAINED ALL YEAR.

3. ALL DRAINAGE INLETS IMMEDIATELY DOWNSTREAM OF THE WORK AREAS AND WITHIN THE WORK AREAS SHALL BE PROTECTED WITH SEDIMENT CONTROL AND INLET FILTER BAGS, YEAR AROUND. INLET FILTER BAGS SHALL BE REMOVED FROM THE DRAINAGE INLETS UPON ACCEPTANCE OF THE PUBLIC IMPROVEMENTS BY THE COUNTY.

4. ALL STABILIZED CONSTRUCTION ACCESS LOCATIONS SHALL BE CONSTRUCTED PER STANDARD DRAWING 11-1 WHERE CONSTRUCTION TRAFFIC ENTERS OR LEAVES PAVED AREAS. THE STABILIZED ACCESS SHALL BE MAINTAINED ON A YEAR AROUND BASIS UNTIL THE COMPLETION OF CONSTRUCTION.

5. ALL AREAS DISTURBED DURING CONSTRUCTION BY GRADING, TRENCHING, OR OTHER ACTIVITIES SHALL BE PROTECTED FROM EROSION DURING THE WET SEASON (OCTOBER 1 THROUGH APRIL 30). HYDROSEED, IF UTILIZED, MUST BE PLACED BY SEPTEMBER 15, HYDROSEED PLACED DURING THE WET SEASON SHALL USE A SECONDARY EROSION PROTECTION METHOD.

6. SENSITIVE AREAS AND AREAS WHERE EXISTING VEGETATION IS BEING PRESERVED SHALL BE PROTECTED WITH CONSTRUCTION FENCING. SEDIMENT CONTROL BMP'S, SHALL BE INSTALLED WHERE ACTIVE CONSTRUCTION AREAS DRAIN INTO SENSITIVE OR PRESERVED VEGETATION AREAS.

7. SEDIMENT CONTROL BMP'S SHALL BE PLACED ALONG THE PROJECT PERIMETER WHERE DRAINAGE LEAVES THE PROJECT SITE. SEDIMENT CONTROL BMP'S SHALL BE MAINTAINED YEAR ROUND UNTIL CONSTRUCTION IS COMPLETE OR THE DRAINAGE PATTERN HAS BEEN CHANGED AND NO LONGER LEAVES THE SITE.

8. EROSION AND SEDIMENT CONTROL MEASURES FOR THIS PROJECT SHALL BE IN SUBSTANTIAL COMPLIANCE AT ALL TIMES WITH THE STORM WATER POLLUTION PREVENTION PLAN (SWPPP) PREPARED FOR THE PROJECT IN ACCORDANCE WITH THE STATE OF CALIFORNIA GENERAL CONSTRUCTION PERMIT. THIS PERMIT REQUIRES THAT THE SWPPP BE KEPT UP TO DATE TO REFLECT THE CHANGING SITE CONDITIONS AND THE SWPPP IS TO BE AVAILABLE ON SITE AT ALL TIMES FOR REVIEW BY STATE AND LOCAL INSPECTORS.

9. PLASTIC COVER MATERIAL SHALL BE POLYETHYLENE SHEETING AND SHALL HAVE A MINIMUM THICKNESS OF 6-MILS. PLASTIC COVERS SHALL BE ANCHORED BY SAND BAGS PLACED NO MORE THAN 10-FEET APART AND BY KEYING INTO THE TOPS OF SLOPES TO PREVENT INFILTRATION OF SURFACE WATER UNDER THE PLASTIC. ALL SEAMS SHALL BE TAPED OR WEIGHTED DOWN THEIR ENTIRE LENGTH, AND THERE SHALL BE AT LEAST A 12-INCH TO 24-INCH OVERLAP OF ALL SEAMS.

10. "NO DUMPING - FLOWS TO CREEK" SHALL BE STAMPED IN THE CONCRETE AT ALL DROP INLETS.

11. ALL EROSION CONTROL BMP'S SHALL BE IN-PLACE PRIOR TO ANY STORM EVENTS.

12. EXCAVATIONS SHALL BE DEWATERED AND THE WATER SHALL PASS THROUGH THE SEDIMENT TRAPS AS SHOWN ON THE DRAWING. NO COLLIDIAL MATERIALS ARE EXPECTED ON THIS SITE.

EROSION CONTROL LEGEND

- **EC-1** — **INLET SEDIMENT CONTROL BARRIER** SEE SAC. CO. STD. DETAIL 11-7
- **EC-2** — **STABILIZED CONSTRUCTION ENTRANCE** SEE SAC. CO. STD. DETAIL 11-1
- **EC-3** — **STORMDRAIN INLET FILTER BAG** SEE SAC. CO. STD. DETAIL 11-9
- **EC-4** — **CONCRETE WASHOUT** SEE SAC. CO. STD. DETAIL 11-6
- **EC-5** — **DUST CONTROL** WATER SHALL BE USED FOR DUST CONTROL
- **EC-6** — **MATERIALS STORAGE AND DEBRIS/SOLID WASTE STOCKPILES** VEHICLE/EQUIPMENT MAINTENANCE, FUELING AND WASHING AREAS. ALL MATERIAL STORED ON-SITE SHALL HAVE PROPER ENCLOSURES AND/OR COVERINGS. TO BE VERIFIED BY CONTRACTOR AND APPROVED BY COUNTY IF CHANGED.
- **EC-7** — **PLASTIC COVERS**
- **EC-8** — **PAINT AND WASTE DISPOSAL AREA**
- **EC-9** — **SILT FENCE** SEE SAC. CO. STD. DETAIL 11-5
- **EC-10** — **SEDIMENT TRAP** SEE SAC. CO. STD. DETAIL 11-3

EC = EROSION CONTROL

BMP = BEST MANAGEMENT PRACTICES

DATE: November 2008

LINE IS 2 INCHES AT FULL SIZE (IF NOT 2"-SCALE ACCORDINGLY)

FILE C-13.dwg
DRAWN TAD
DESIGNED TAD
CHECKED WG
CHECKED

REGISTERED PROFESSIONAL ENGINEER JOSEPH C. SCALMANINI No. 28233 Exp. 3-31-2010 CIVIL STATE OF CALIFORNIA

LUHDORFF & SCALMANINI CONSULTING ENGINEERS

REVISIONS

ZONE	REV.	DESCRIPTION	BY	DATE	APP.

SACRAMENTO SUBURBAN WATER DIST.
VERNER AVENUE
WELL AND TREATMENT FACILITIES

SUBMITTED: _____ DATE: _____
SUBMITTAL APPROVED: _____ DATE: _____

SWPPP SITE PLAN

SCALE: As Noted

DRAWING NUMBER: C-13

SHEET NUMBER: 19 OF 52

CAD FILE: G:/Projects/Sacramento Suburban W D/07-3-075/BID_SET/C-13.dwg CFG FILE: LSCE2500.PCP_MRG DATE: 11-25-08 11:22am

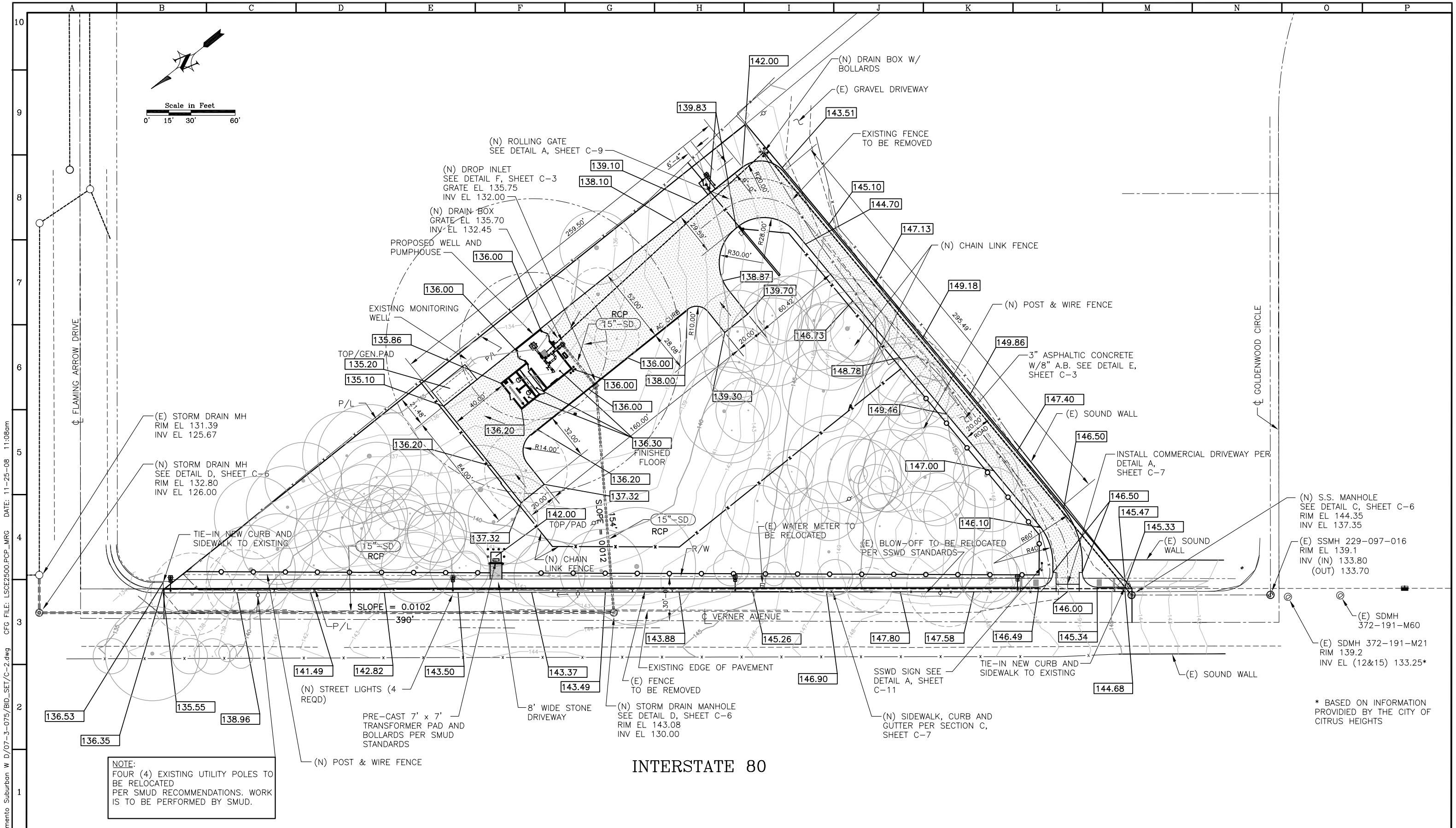

NOTE:
FOUR (4) EXISTING UTILITY POLES TO BE RELOCATED PER SMUD RECOMMENDATIONS. WORK IS TO BE PERFORMED BY SMUD.

* BASED ON INFORMATION PROVIDIED BY THE CITY OF CITRUS HEIGHTS

DATE: November 2008

LINE IS 2 INCHES AT FULL SIZE (IF NOT 2"-SCALE ACCORDINGLY)

FILE C-2.dwg
DRAWN TAD
DESIGNED TAD
CHECKED WG
CHECKED

REGISTERED PROFESSIONAL ENGINEER JOSEPH C. SCALMANINI No. 28233 Exp. 3-31-2010 CIVIL STATE OF CALIFORNIA

LUHDORFF & SCALMANINI CONSULTING ENGINEERS

REVISIONS

ZONE	REV.	DESCRIPTION	BY	DATE	APP.

SACRAMENTO SUBURBAN WATER DIST.
VERNER AVENUE
WELL AND TREATMENT FACILITIES

SUBMITTED: _____ DATE: _____
SUBMITTAL APPROVED: _____ DATE: _____

GRADING PLAN

SCALE 1"=30'

DRAWING NUMBER C-2

SHEET NUMBER 9 OF 52

CAD FILE: G:/Projects/Sacramento Suburban W D/07-3-075/BID_SET/C-2.dwg CFG FILE: LSCE2500.PCP_MRG DATE: 11-25-08 11:08am

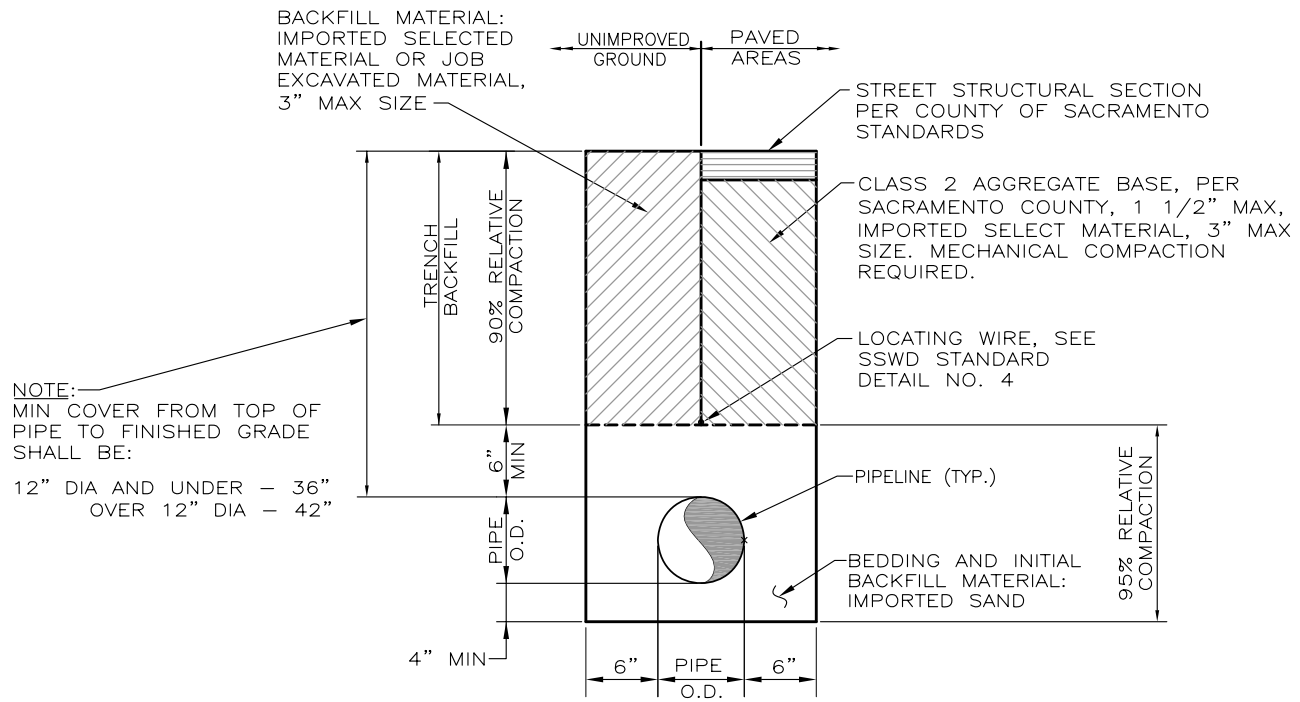

TYPICAL TRENCH (A VAR)

N.T.S.

REQUIRED BEARING AREAS IN SQ. FT.							
INSTALLATION	TYPE FITTING	PIPE SIZES 4"	6"	8"	10"	12"	15"
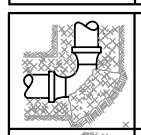	90° ELL	2	4	7	12	16	31
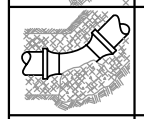	45° BEND	1	2	4	6	10	17
	22½° BEND	1	1	2	3	5	9
	11¼° BEND						
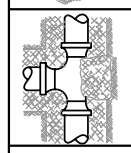	TEE	2	3	5	8	12	22
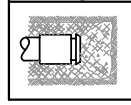	DEAD END	2	3	5	8	12	22

NOTES:

1. THRUST BLOCKS ARE TO BE CONSTRUCTED OF CLASS "B" CONCRETE.
2. AREAS GIVEN ARE FOR CLASS 150 PIPE AT TEST PRESSURE OF 150 P.S.I. IN SOIL W/1,500 P.S.F. BEARING CAPACITY. INSTALLATIONS USING DIFFERENT DATA SHALL ADJUST AREAS SUBJECT TO ENGINEERS APPROVAL.
3. BLOCKING TO BE POURED AGAINST UNDISTURBED SOIL.
4. THRUST BLOCKS ARE TO BE FREE, SEPARATE, & INDEPENDENT OF ADJACENT OR NEARBY THRUST BLOCKS.

HORIZONAL THRUST BLOCK DETAIL (B VAR)

N.T.S.

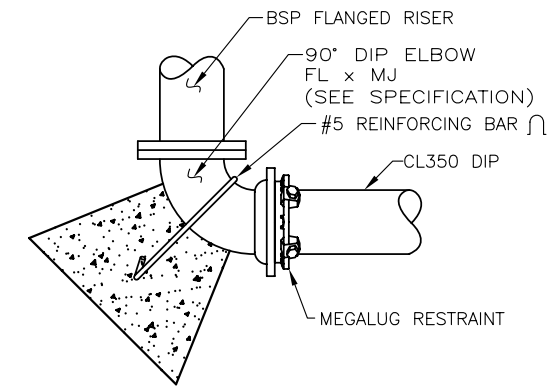

ALL VERTICAL ELBOW THRUST BLOCKS (C VAR)

N.T.S.

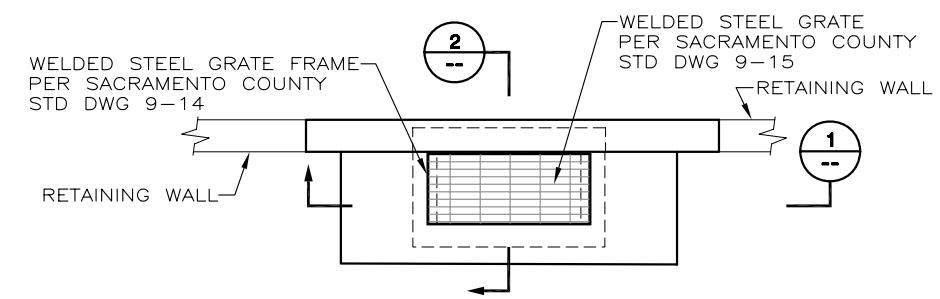

DROP INLET (F C-2)

N.T.S.

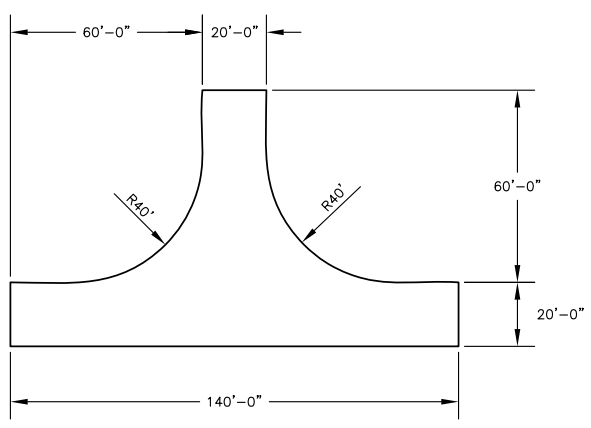

FIRE DEPARTMENT TURNAROUND (D C-1)

N.T.S.

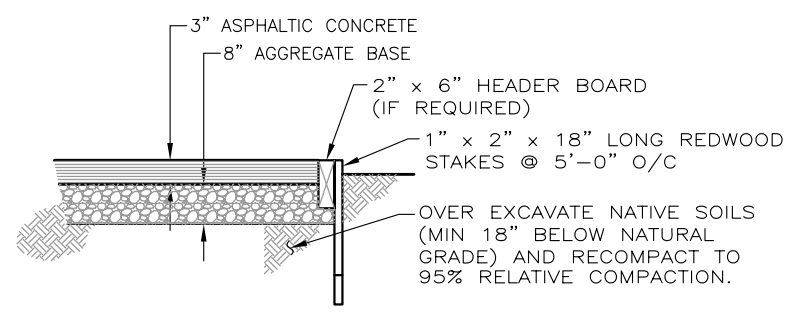

PAVEMENT DETAIL (E C-2)

N.T.S.

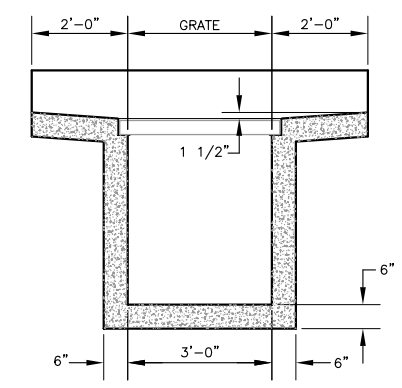

SECTION (1 --)

N.T.S.

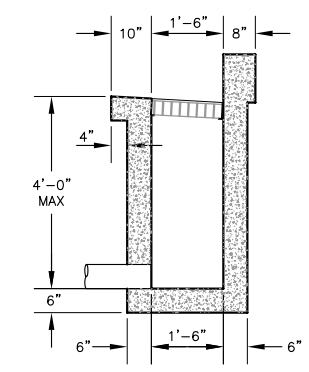

SECTION (2 --)

N.T.S.

DATE: November 2008

LINE IS 2 INCHES AT FULL SIZE (IF NOT 2"–SCALE ACCORDINGLY)

FILE C–3.dwg
DRAWN TAD
DESIGNED TAD
CHECKED WG
CHECKED

REGISTERED PROFESSIONAL ENGINEER JOSEPH C. SCALMANINI No. 28233 Dec 3, 2010 CIVIL STATE OF CALIFORNIA

LUHDORFF & SCALMANINI CONSULTING ENGINEERS

REVISIONS

ZONE	REV.	DESCRIPTION	BY	DATE	APP.

SACRAMENTO SUBURBAN WATER DIST.
VERNER AVENUE
WELL AND TREATMENT FACILITIES

SUBMITTED: _____ DATE: _____
SUBMITTAL APPROVED: _____ DATE: _____

CIVIL DETAILS

SCALE N.T.S.

DRAWING NUMBER C-3

SHEET NUMBER 10 OF 52

CAD FILE: G:/Projects/Sacramento Suburban W D/07-3-075/BID_SET/C-3.dwg CFG FILE: LSCE2500.PCP_MRG DATE: 11-25-08 11:09am

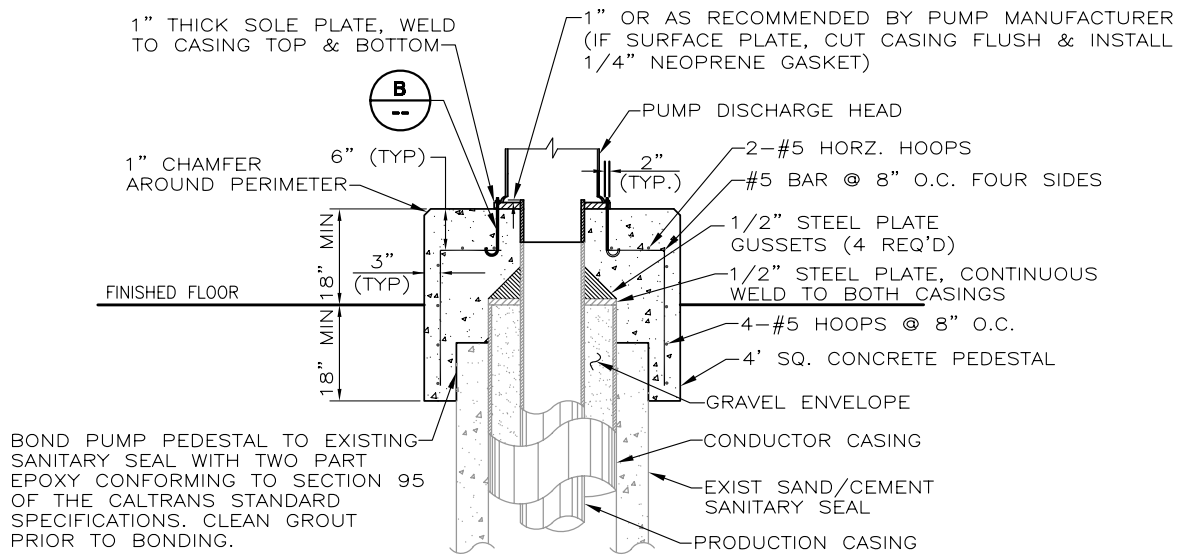

PUMP PEDESTAL DETAIL-STRUCTURAL (A1 / M-1)

N.T.S.

NOTES:

1. THE CONTRACTOR SHALL BE RESPONSIBLE FOR LOCATING, CLEANING AND EXTENDING THE EXISTING SANITARY SEAL A MAXIMUM DEPTH OF 10 FEET BELOW THE TOP OF CONDUCTOR CASING.
2. IF CONTRACTOR ENCOUNTERS "H" BEAMS WELDED TO EITHER THE PRODUCTION OR CASING PIPE, THE CONTRACTOR MAY REMOVE THE "H" BEAMS WITH THE APPROVAL OF THE ENGINEER.

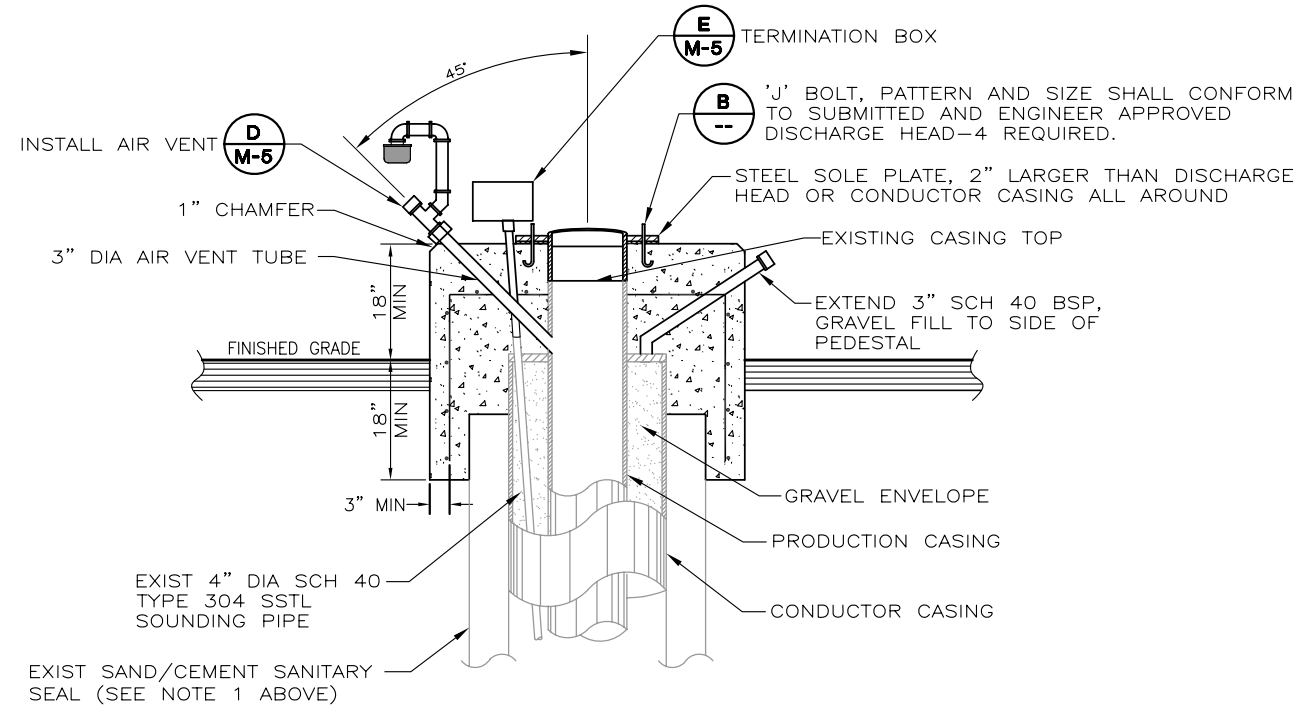

PUMP PEDESTAL DETAIL-MECHANICAL (A2 / M-1)

N.T.S.

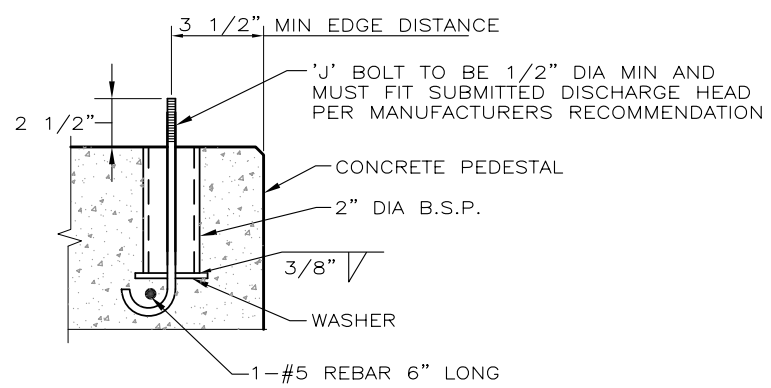

'J' BOLT INSTALLATION DETAIL (B / --)

N.T.S.

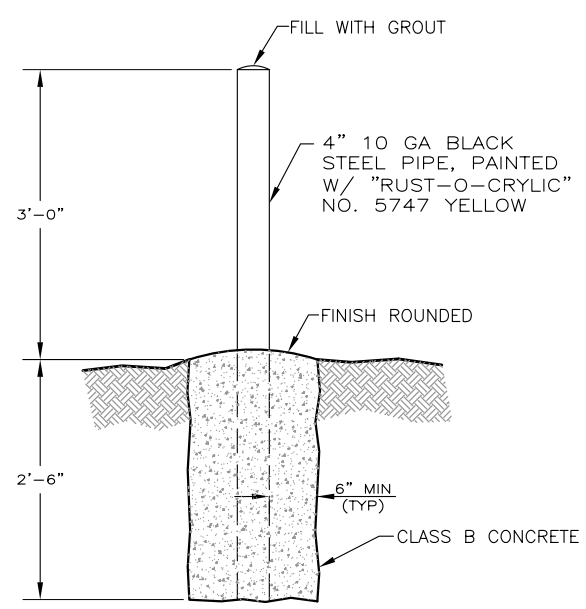

PERMANENT BOLLARD (C / C-1)

N.T.S.

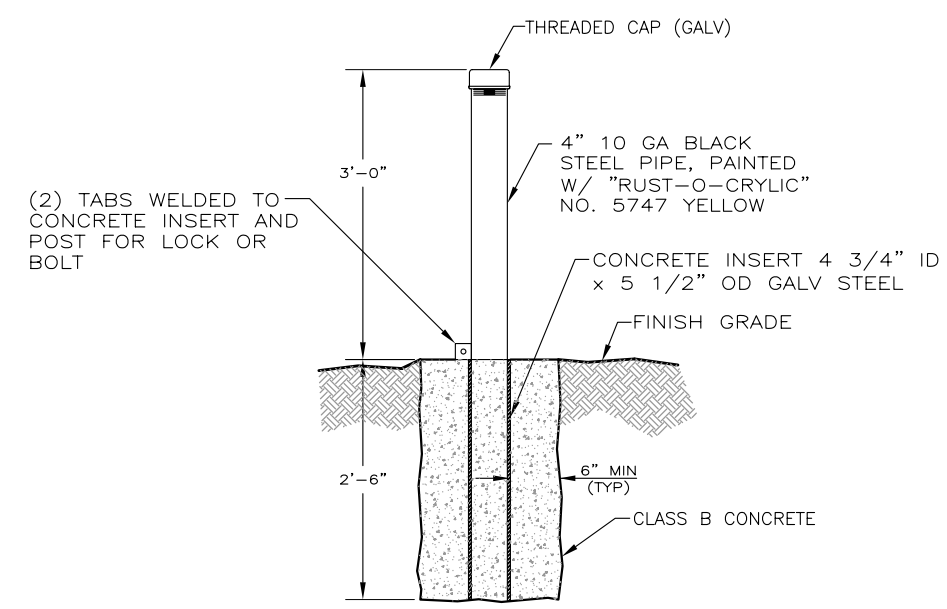

REMOVABLE BOLLARD (D / C-1)

N.T.S.

DATE: November 2008	LINE IS 2 INCHES AT FULL SIZE (IF NOT 2"-SCALE ACCORDINGLY)	REGISTERED PROFESSIONAL ENGINEER JOSEPH C. SCALMANINI No. 28233 Exp. 3-31-2010 CIVIL STATE OF CALIFORNIA	LUHDORFF & SCALMANINI CONSULTING ENGINEERS	REVISIONS (ZONE / REV. / DESCRIPTION / BY / DATE / APP.)	SACRAMENTO SUBURBAN WATER DIST. *VERNER AVENUE WELL AND TREATMENT FACILITIES*	CIVIL DETAILS	SCALE N.T.S.
	FILE C-4.dwg				SUBMITTED: ____ DATE: ____		DRAWING NUMBER C-4
	DRAWN TAD				SUBMITTAL APPROVED: ____ DATE: ____		SHEET NUMBER 11 OF 52
	DESIGNED TAD						
	CHECKED WG						
	CHECKED						

CAD FILE: G:/Projects/Sacramento Suburban W D/07-3-075/BID_SET/C-4.dwg CFG FILE: LSCE2500.PCP_MRG DATE: 11-25-08 11:11am

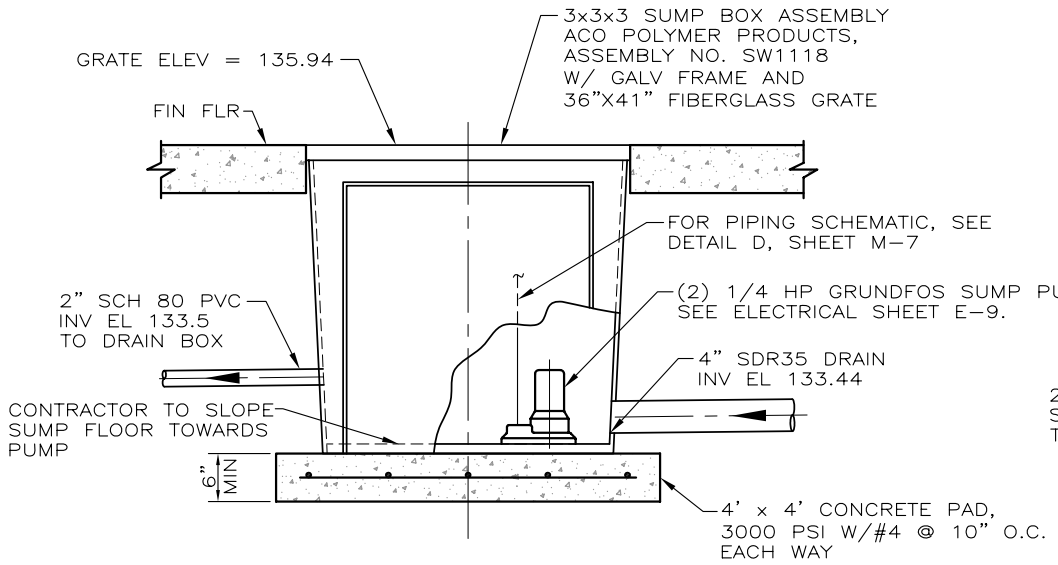

SUMP BOX ASSEMBLY (A / M-1)

N.T.S.

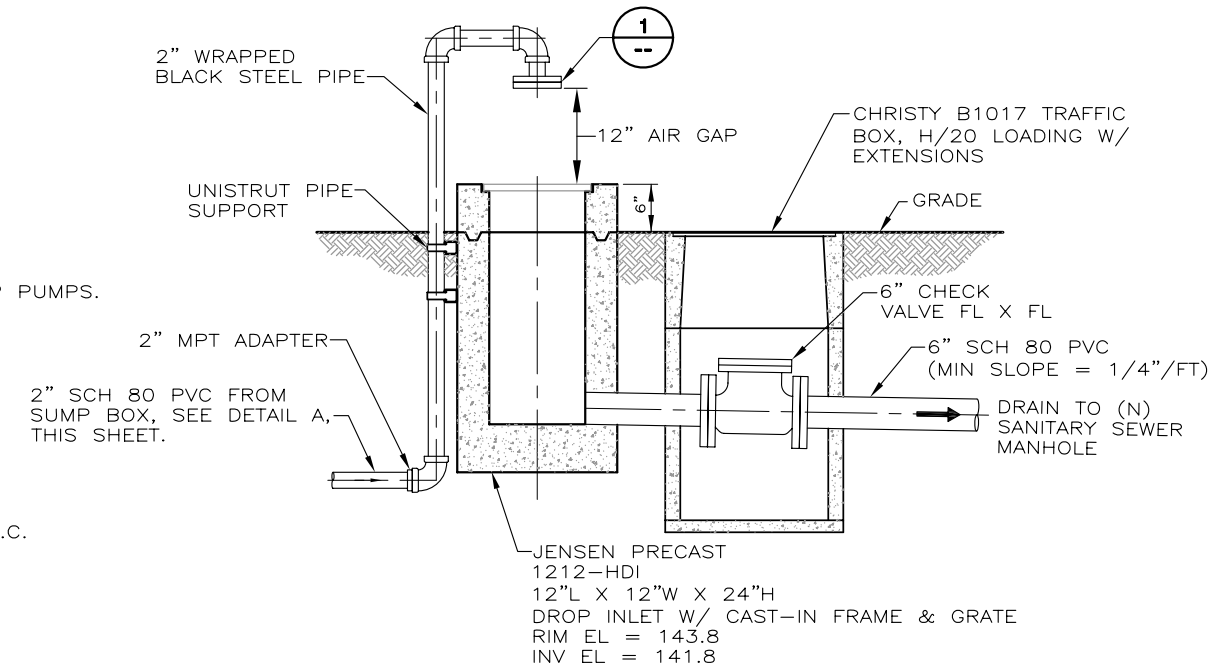

DRAIN BOX ARRANGEMENT (B / C-1)

N.T.S.

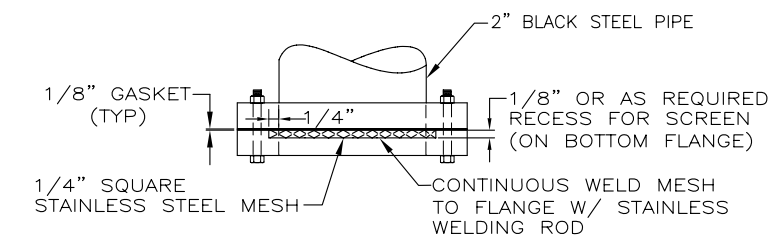

FLANGED OUTLET ASSEMBLY (1 / --)

N.T.S.

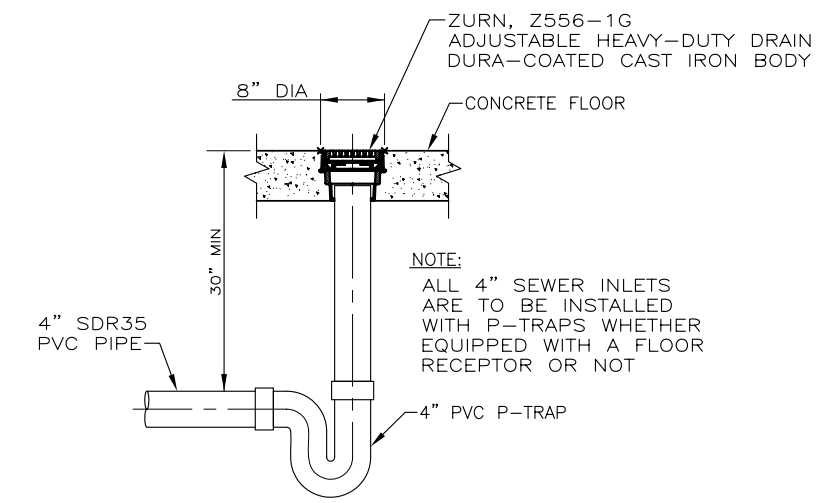

BUILDING DRAIN DETAIL (E / M-1)

N.T.S.

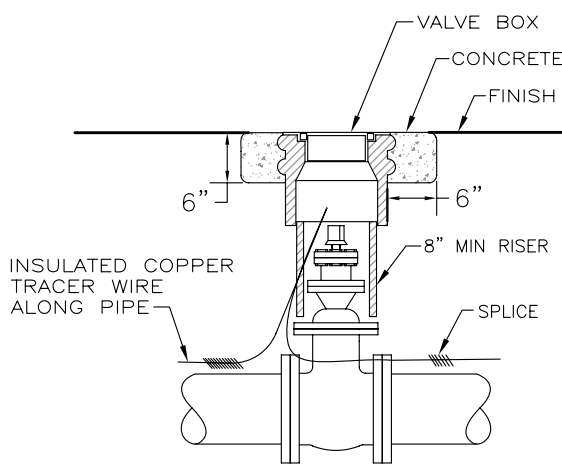

1. ALL VALVES SHALL BE CLASS 150 AND SHALL MEET OR EXCEED THE REQUIREMENTS OF AWWA STANDARD C-504 FOR BUTTERFLY TYPE AND AWWA STANDARD C-509 OR C-515 FOR RESILIENT SEAT GATE TYPE VALVES. VALVES SHALL BE SUITABLE FOR BURIED SERVICE AND SHALL BE EQUIPPED WITH A 2 INCH SQUARE OPERATING NUT, AND WILL OPEN CCW.
2. BUTTERFLY VALVES SHALL BE USED ON 10 INCH DIAMETER OR LARGER PIPE, AND RESILIENT SEAT GATE VALVES SHALL BE USED ON 8 INCH OR SMALLER PIPE OR UNLESS OTHERWISE NOTED.
3. VALVE BOX: CHRISTY G-5 WITH CONCRETE COLLAR.
4. VALVE BOX EXTENSION: CHRISTY 1661 (8"), 1663 (12")OR EQUAL.
5. C.I. COVER: INSCRIBED "WATER", CHRISTY C275.
6. TRACING WIRE: TO BE #10 AWG SINGLE STRAND INSULATED COPPER WIRE.

VALVE BOX ASSEMBLY (C / M-10)

N.T.S.

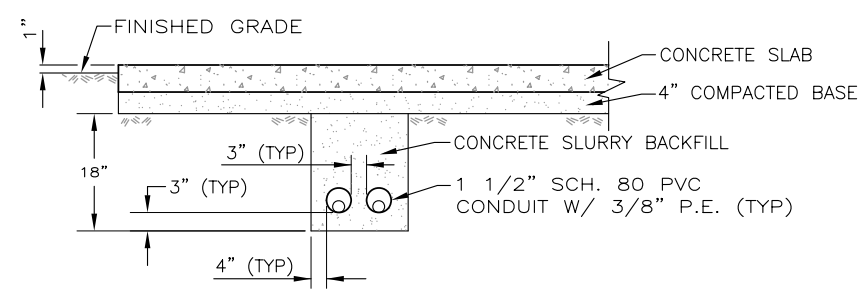

CHEMICAL FEED CONDUIT ENCASEMENT (D / M-2)

N.T.S.

DATE: November 2008

LINE IS 2 INCHES AT FULL SIZE (IF NOT 2"-SCALE ACCORDINGLY)

FILE C-5.dwg
DRAWN TAD
DESIGNED TAD
CHECKED WG
CHECKED

REGISTERED PROFESSIONAL ENGINEER JOSEPH C. SCALMANINI No. 28233 Exp. 3-31-2010 CIVIL STATE OF CALIFORNIA

LUHDORFF & SCALMANINI CONSULTING ENGINEERS

REVISIONS

ZONE	REV.	DESCRIPTION	BY	DATE	APP.

SACRAMENTO SUBURBAN WATER DIST.
VERNER AVENUE
WELL AND TREATMENT FACILITIES

SUBMITTED: _____ DATE: _____
SUBMITTAL APPROVED: _____ DATE: _____

CIVIL DETAILS

SCALE N.T.S.
DRAWING NUMBER C-5
SHEET NUMBER 12 OF 52

CAD FILE: G:/Projects/Sacramento Suburban W D/07-3-075/BID_SET/C-5.dwg CFG FILE: LSCE2500.PCP_MRG DATE: 11-25-08 11:12am

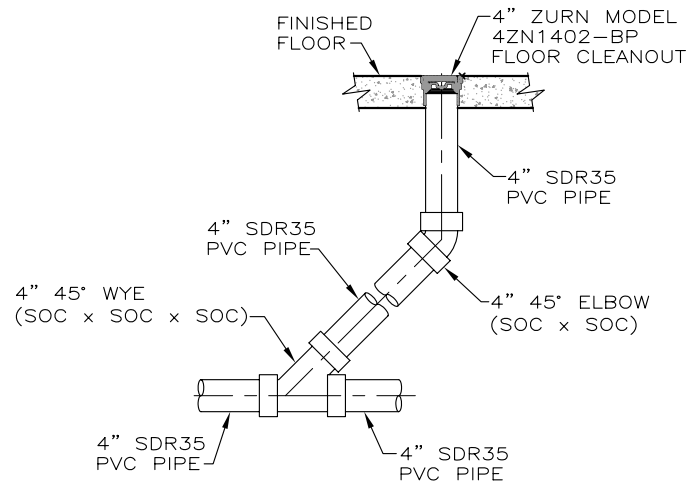

DRAIN CLEANOUT (A / M-2)

N.T.S.

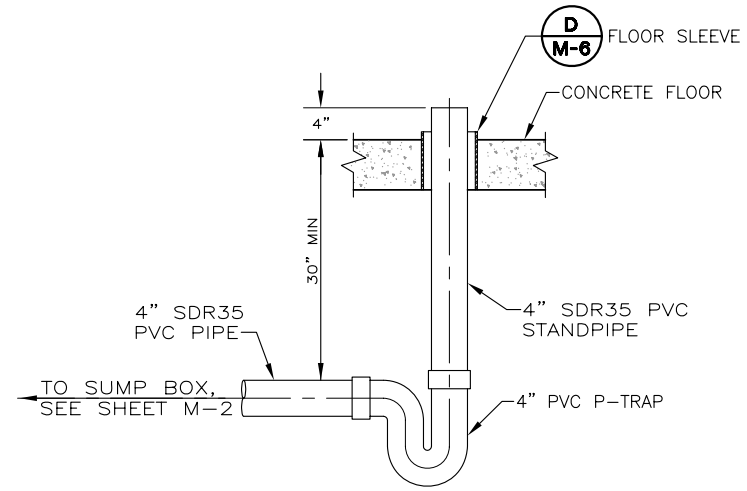

HUB DRAIN DETAIL (B / M-7)

N.T.S.

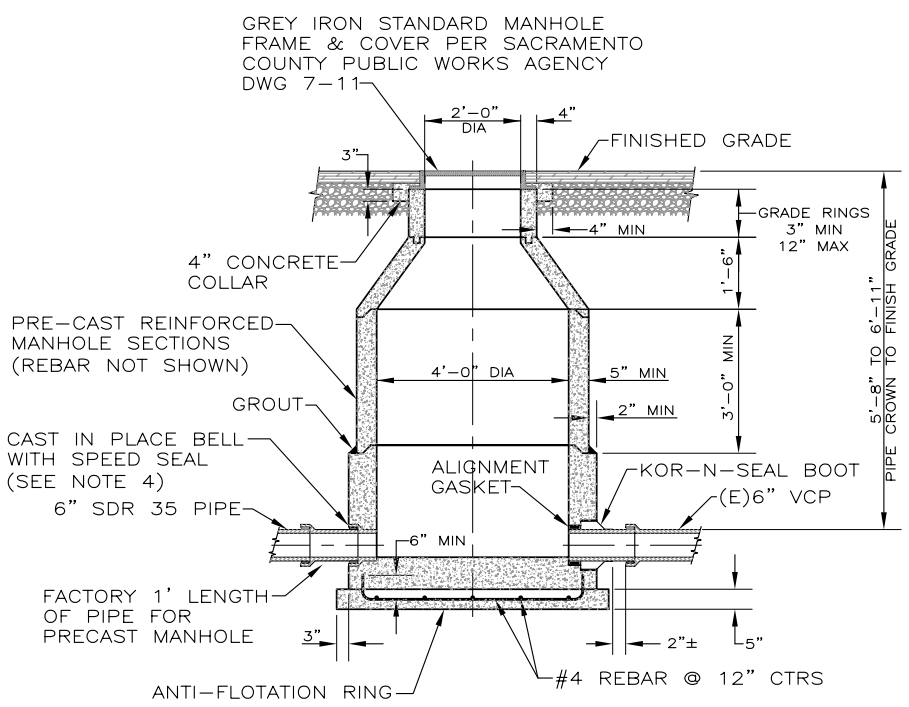

SANITARY SEWER MANHOLE (C / C-1)

N.T.S.

NOTES:

1. CLASS A CONCRETE SHALL BE USED FOR MANHOLE BASES.
2. PIPE SHALL STOP AT INSIDE FACE OF MANHOLE.
3. JOINTS FOR THE BARREL SECTION SHALL BE TONGUE AND GROOVE. ALL LIFTING HOLES SHALL BE SEALED WITH NON METALLIC NON-SHRINK GROUT.
4. ALL MANHOLE BASES SHALL BE PRECAST AND SHALL BE PLACED ON 4" MIN OF CRUSHED ROCK PLACED OVER UNDISTURBED MATERIAL. CONNECTION OF THE PIPE TO THE MANHOLE SHALL USE A RESILIENT CONNECTOR CONFORMING TO ASTM STANDARD C923 SUCH AS KOR-N-SEAL, A-LOK, OR APPROVED EQUAL. ALL MANHOLE BASES TO INCLUDE AN ANTI-FLOATATION RING.
5. BEDDING FOR PRECAST MANHOLE SHALL BE SELECT IMPORTED MATERIAL 1/2" OR 3/4" CRUSHED ROCK.
6. THE STANDARD CONE MAY BE PROVIDED AS TWO PRECAST SECTIONS.

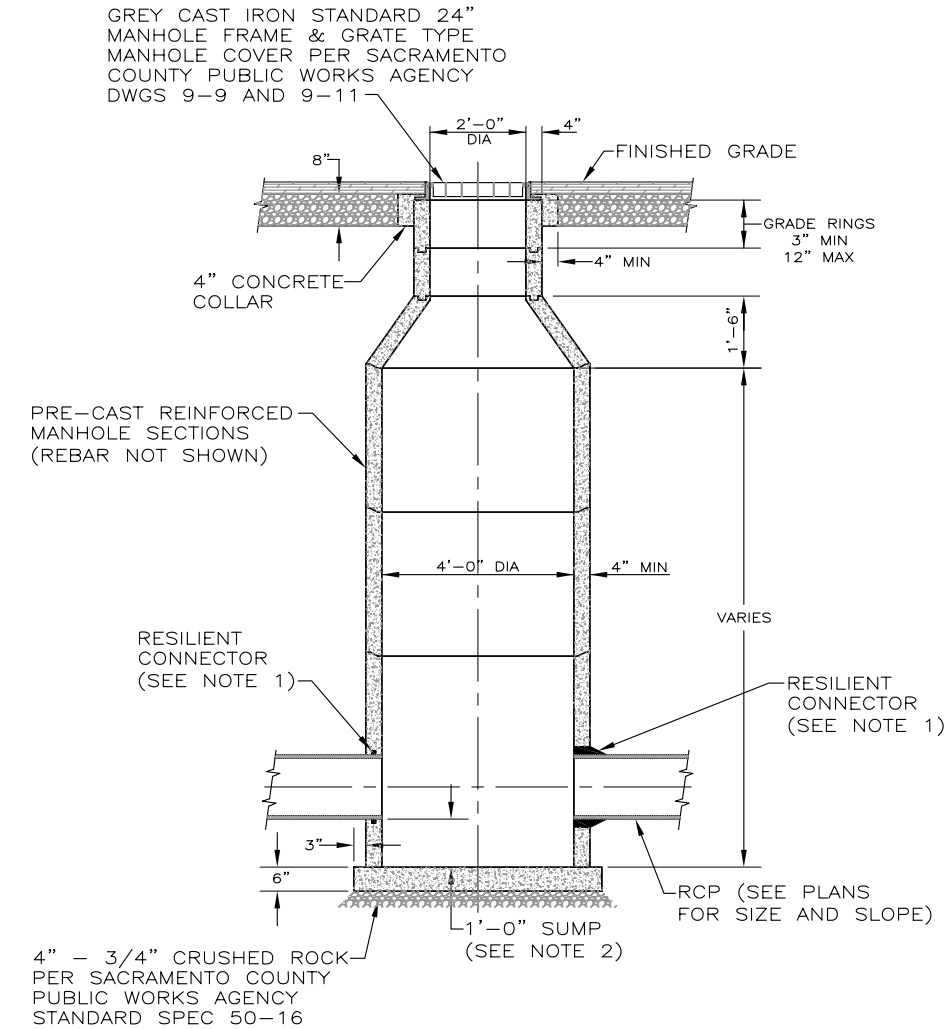

NOTES:

1. USE FLEXIBLE COMPRESSION GASKET OR BOOT CONNECTOR CONFORMING TO ASTM C-923. CONNECTION SHALL BE WATER AND SOIL TIGHT.
2. SUMP SHALL BE 1'-0" DEEP, MEASURED FROM INVERT OF OUTFALL PIPE.
3. RISER SECTIONS, CONES, AND ADJUSTING RINGS SHALL CONFORM TO ASTM C-478.
4. ALL JOINTS SHALL BE MADE WITH PREFORMED PLASTIC JOINT SEALING COMPOUND. FOLLOWING INSTALLATION GROUT ALL INTERIOR AND EXTERIOR JOINTS.

STORM DRAIN MANHOLE (D / C-1)

N.T.S.

CAD FILE: G:/Projects/Sacramento Suburban W D/07-3-075/BID_SET/C-6.dwg CFG FILE: LSCE2500.PCP_MRG DATE: 11-25-08 11:13am

DATE: November 2008

LINE IS 2 INCHES AT FULL SIZE (IF NOT 2"-SCALE ACCORDINGLY)

FILE C-6.dwg
DRAWN TAD
DESIGNED TAD
CHECKED WG
CHECKED

REGISTERED PROFESSIONAL ENGINEER JOSEPH C. SCALMANINI No. 28233 Exp. 3-31-2010 CIVIL STATE OF CALIFORNIA

LUHDORFF & SCALMANINI CONSULTING ENGINEERS

REVISIONS

ZONE	REV.	DESCRIPTION	BY	DATE	APP.

SACRAMENTO SUBURBAN WATER DIST.
VERNER AVENUE
WELL AND TREATMENT FACILITIES

SUBMITTED: _____ DATE: _____
SUBMITTAL APPROVED: _____ DATE: _____

CIVIL DETAILS

SCALE: N.T.S.
DRAWING NUMBER: C-6
SHEET NUMBER: 13 OF 52

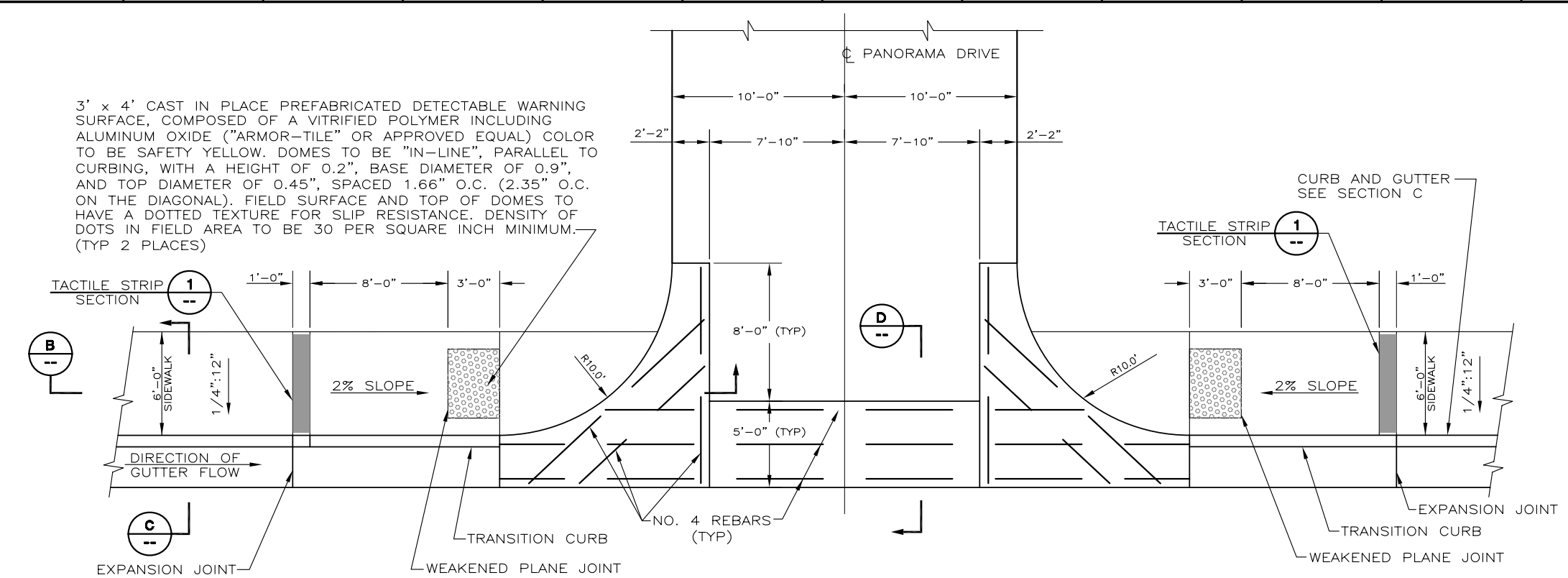

ROAD ENTRANCE DETAIL (A / C-1)
N.T.S.

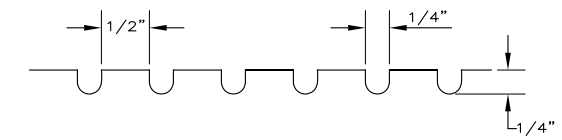

TACTILE STRIP GROOVE DETAIL (1 / --)
N.T.S.

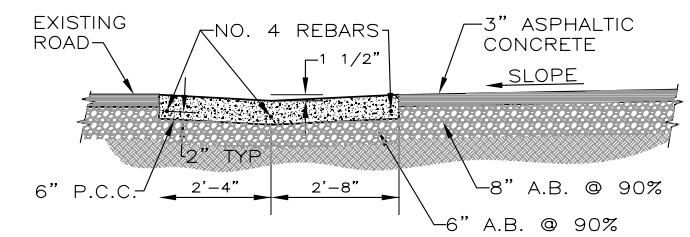

SECTION (D / --)
N.T.S.

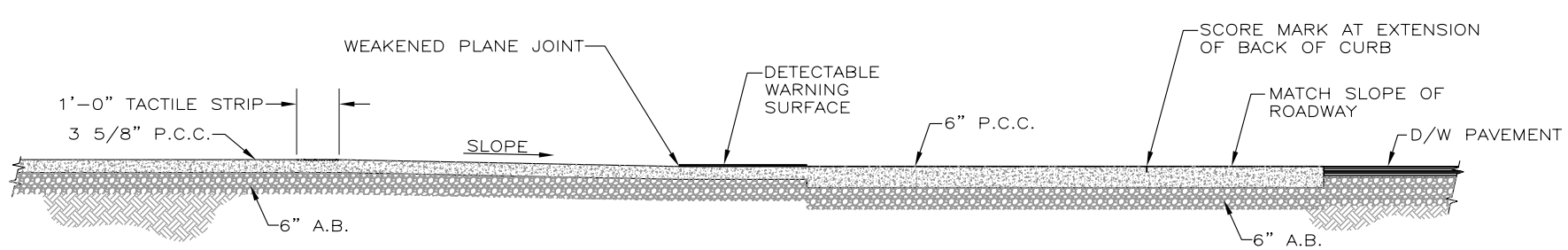

SECTION (B / --)
N.T.S.

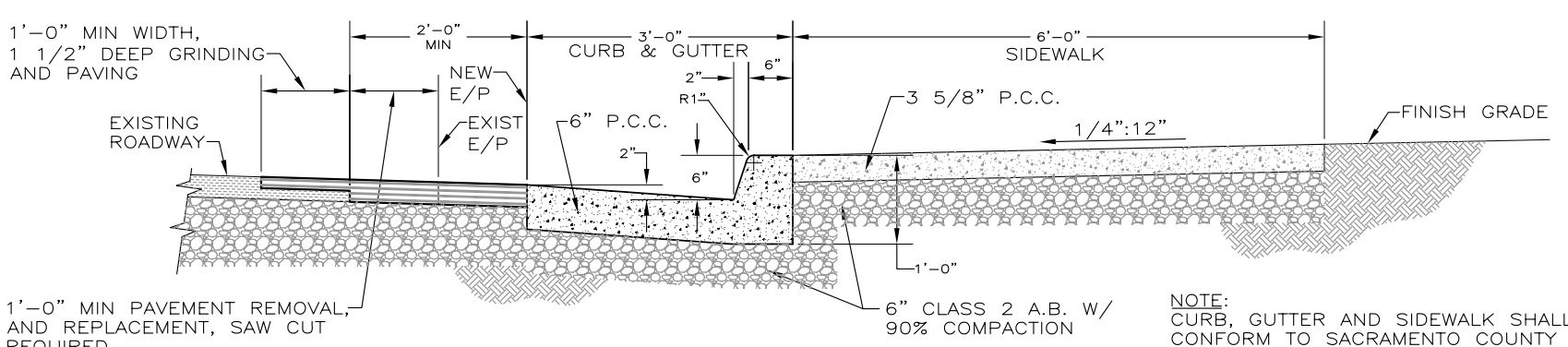

SECTION (C / --)
N.T.S.

NOTE:
CURB, GUTTER AND SIDEWALK SHALL CONFORM TO SACRAMENTO COUNTY STANDARD CONSTUCTION SPECIFICATIONS, SECTION 27.

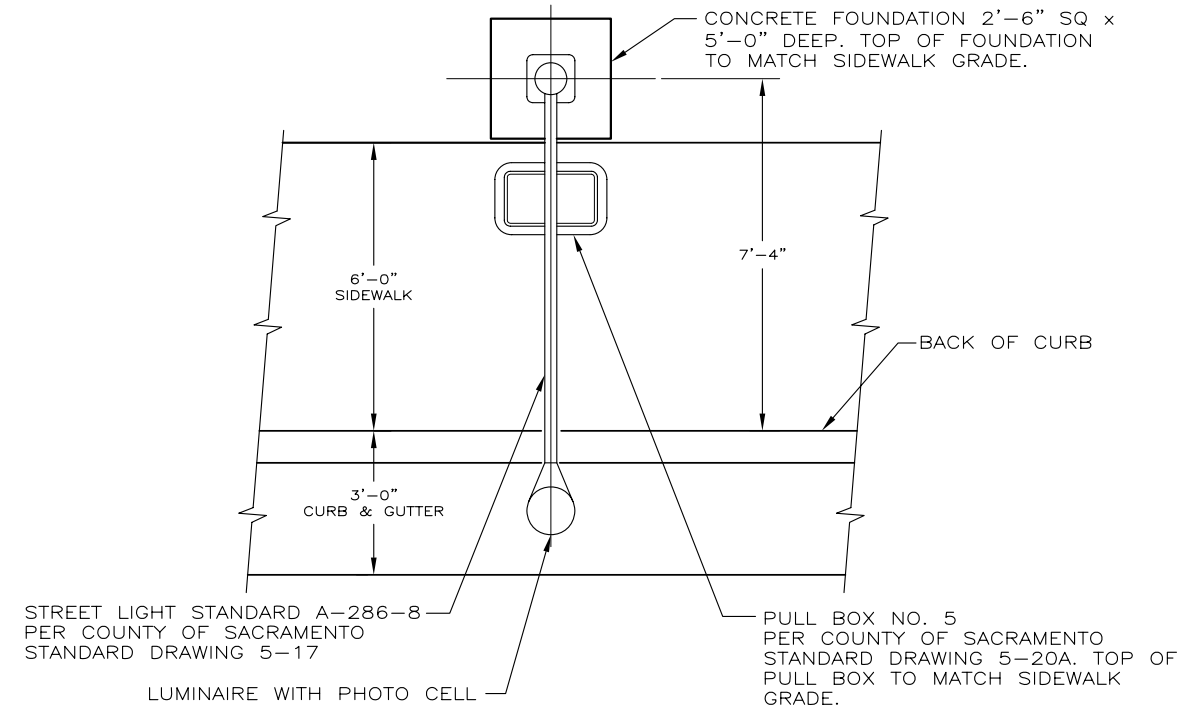

STREET LIGHT STANDARD PLACEMENT (E / C-1)
N.T.S.

CAD FILE: G:/Projects/Sacramento Suburban W D/07-3-075/BID_SET/C-7.dwg CFG FILE: LSCE2500.PCP_MRG DATE: 11-25-08 11:15am

DATE: November 2008

LINE IS 2 INCHES AT FULL SIZE (IF NOT 2"-SCALE ACCORDINGLY)

FILE C-7.dwg
DRAWN TAD
DESIGNED TAD
CHECKED
CHECKED

REGISTERED PROFESSIONAL ENGINEER JOSEPH C. SCALMANINI No. 28233 Exp. 3-31-2010 CIVIL STATE OF CALIFORNIA

LUHDORFF & SCALMANINI CONSULTING ENGINEERS

REVISIONS					
ZONE	REV.	DESCRIPTION	BY	DATE	APP.

SACRAMENTO SUBURBAN WATER DIST.
VERNER AVENUE
WELL AND TREATMENT FACILITIES

SUBMITTED: _____ DATE: _____
SUBMITTAL APPROVED: _____ DATE: _____

CIVIL DETAILS

SCALE

DRAWING NUMBER C-7

SHEET NUMBER 14 OF 52

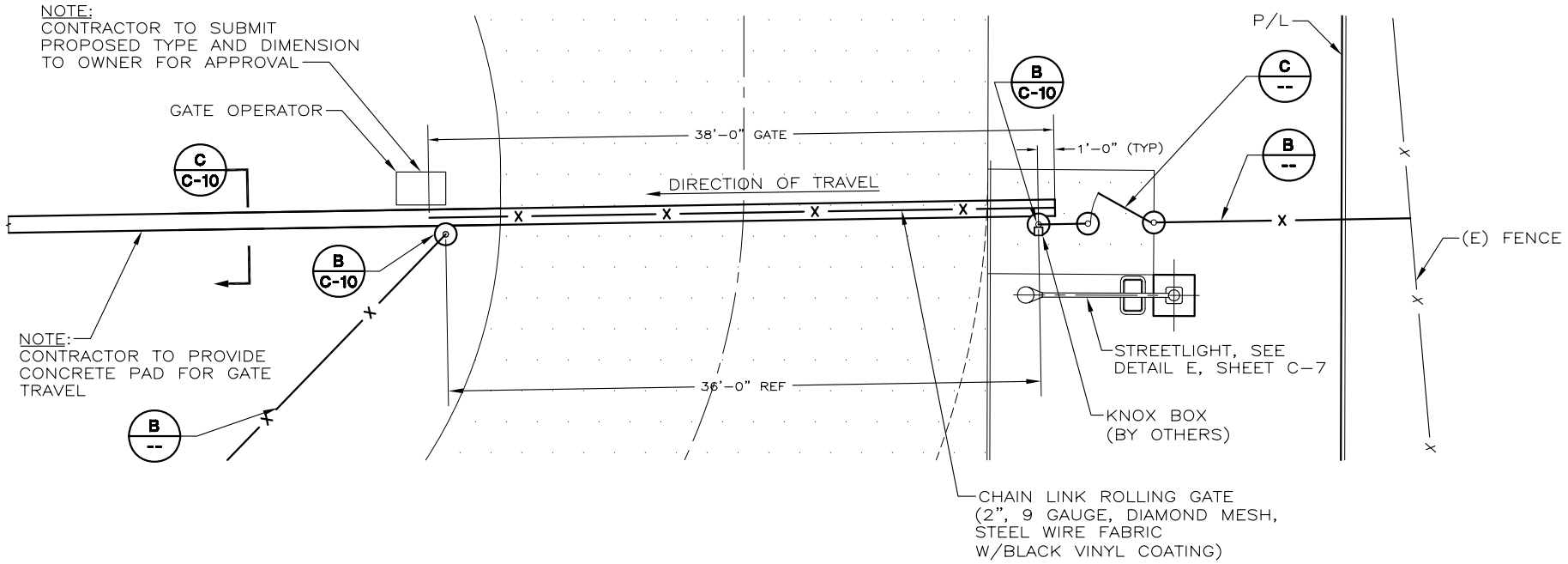

ROLLING GATE ARRANGEMENT (A C-1)

N.T.S.

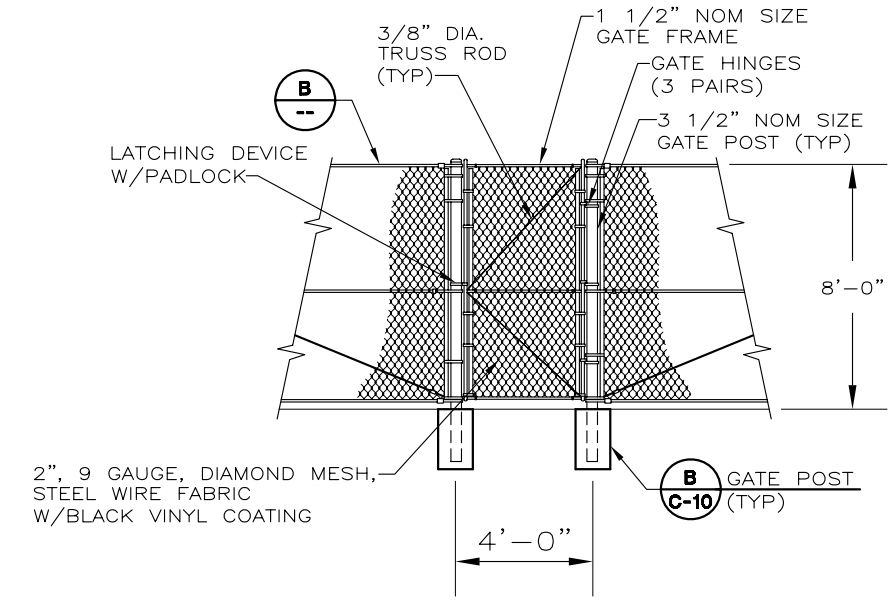

MANGATE (C C-1)

N.T.S.

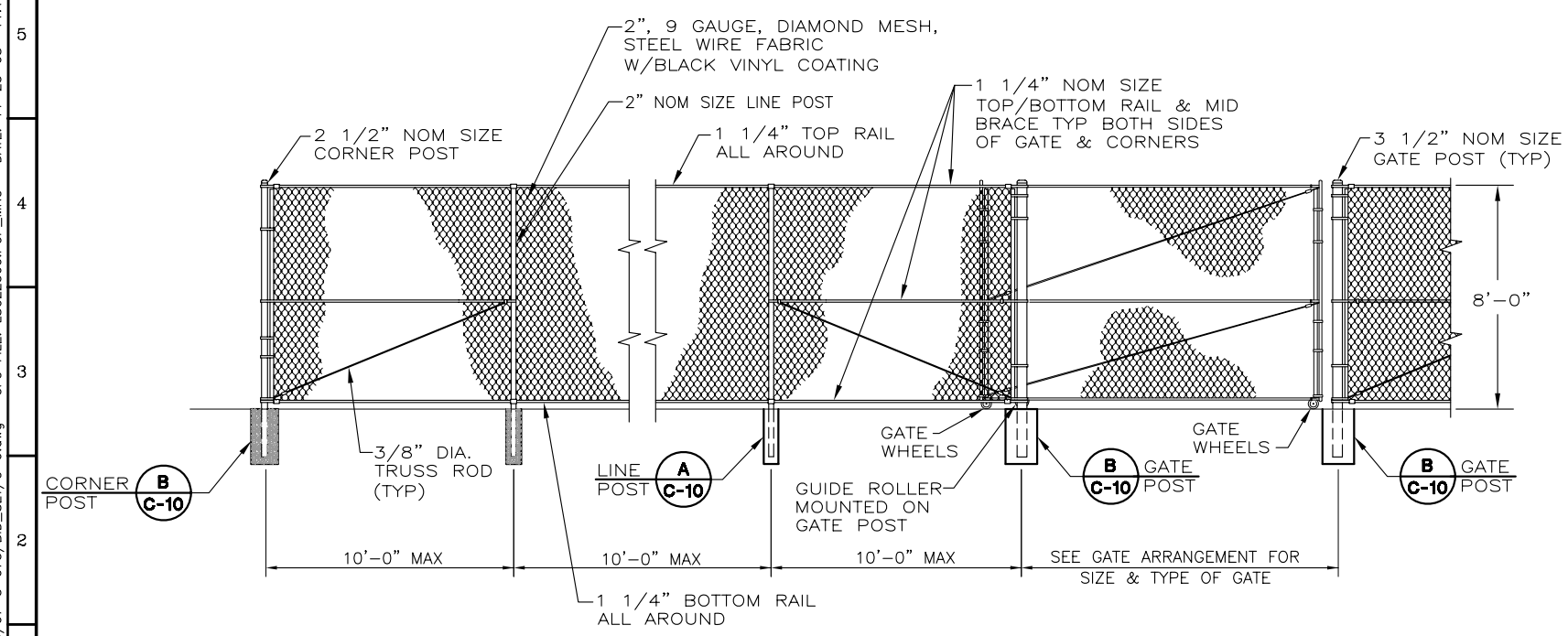

FENCE (ROLLING GATE) (B C-1)

N.T.S.

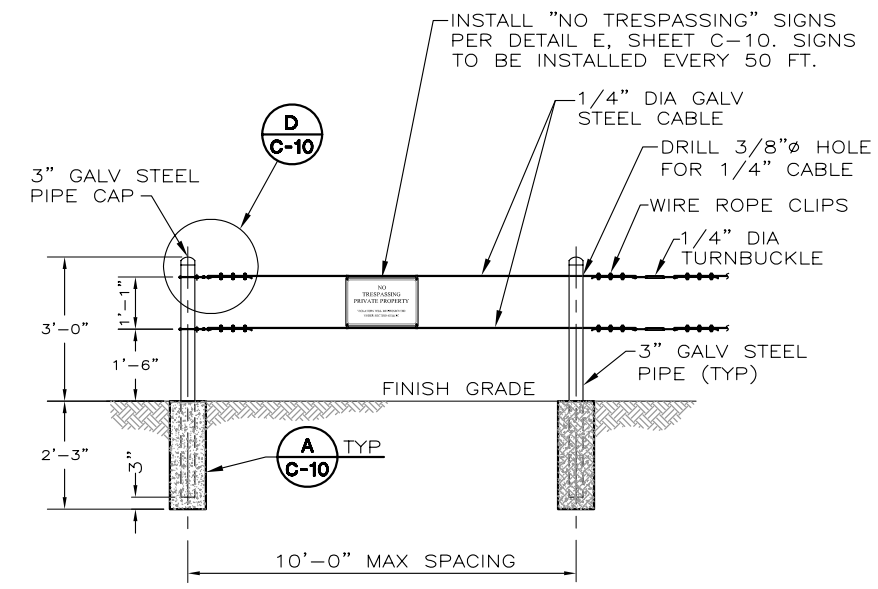

POST & WIRE PERIMETER FENCE (D C-1)

N.T.S.

DATE: November 2008	LINE IS 2 INCHES AT FULL SIZE (IF NOT 2"-SCALE ACCORDINGLY)	REGISTERED PROFESSIONAL ENGINEER JOSEPH C. SCALMANINI No. 28233 Exp. 3-31-2010 CIVIL STATE OF CALIFORNIA	LUHDORFF & SCALMANINI CONSULTING ENGINEERS	REVISIONS: ZONE / REV. / DESCRIPTION / BY / DATE / APP.	SACRAMENTO SUBURBAN WATER DIST. *VERNER AVENUE WELL AND TREATMENT FACILITIES*	FENCE ARRANGEMENT AND DETAILS	SCALE N.T.S.
	FILE C-9.dwg				SUBMITTED: DATE:		DRAWING NUMBER C-9
	DRAWN TAD				SUBMITTAL APPROVED: DATE:		SHEET NUMBER 15 OF 52
	DESIGNED TAD						
	CHECKED						
	CHECKED						

CAD FILE: G:/Projects/Sacramento Suburban W D/07-3-075/BID_SET/C-9.dwg CFG FILE: LSCE2500.PCP_MRG DATE: 11-25-08 11:16am

COMPONENTS

SYMBOL	DESCRIPTION
RES	RESISTOR
	POTENTIOMETER
	CAPACITOR, FIXED
	CAPACITOR, ADJUSTABLE
	DIODE
	DIODE, ZENER
	VARISTOR TRANSIENT VOLTAGE SUPPRESSOR
	VOLTAGE SURGE SUPPRESSOR, AC
MOV	METAL OXIDE VARISTOR

DEVICES – MISCELLANEOUS

SYMBOL	DESCRIPTION
	AUDIBLE ALARM
	BATTERY
HTR	HEATER
HP #	3 PHASE MOTOR # = MOTOR HP
HP #	3 PHASE MOTOR # = MOTOR HP
HP #	SINGLE PHASE MOTOR
	TRANSFORMER SIZE AND VOLTAGE AS SHOWN
M	UTILITY POWER METER

SWITCHES – OPERATOR

SYMBOL	DESCRIPTION
SW	TOGGLE OR DISCONNECT SWITCH
PB	PUSHBUTTON – NORMALLY OPEN, MOMENTARY ACTION
PB	PUSHBUTTON – NORMALLY CLOSED, MOMENTARY ACTION
PB	PUSHBUTTON, MECHANICALLY INTERLOCKED, DOUBLE CIRCUIT – NORMALLY CLOSED AND NORMALLY OPEN, MAINTAINED ACTION
H O A	SELECTOR SWITCH, 3 POSITION – CONTACT STATUS SHOWN EXISTS AT POSITION OF H–HAND, O–OFF, OR A–AUTO
2–1 1–2	SELECTOR SWITCH, 2 POSITION – CONTACT STATUS SHOWN EXISTS AT POSITION AS SHOWN

SWITCHES – PROCESS

SYMBOL	DESCRIPTION
FS	FLOW SWITCH – CLOSES UPON INCREASING FLOW
FS	FLOW SWITCH – OPENS UPON INCREASING FLOW
LS	LEVEL SWITCH – CLOSES UPON INCREASING LEVEL
LS	LEVEL SWITCH – OPENS UPON INCREASING LEVEL
PS	PRESSURE SWITCH – CLOSES UPON INCREASING PRESSURE (DECREASING VACUUM)
PS	PRESSURE SWITCH – OPENS UPON INCREASING PRESSURE (DECREASING VACUUM)
TS	TEMPERATURE SWITCH – CLOSES UPON INCREASING TEMPERATURE
TS	TEMPERATURE SWITCH – OPENS UPON INCREASING TEMPERATURE
ZS	LIMIT SWITCH – CLOSES AT SET LIMIT
ZS	LIMIT SWITCH – OPENS AT SET LIMIT
ZS	PROXIMITY SWITCH – CLOSES UPON DECREASING DISTANCE
ZS	PROXIMITY SWITCH – OPENS UPON DECREASING DISTANCE
WS	TORQUE SWITCH – CLOSES UPON INCREASING TORQUE
WS	TORQUE SWITCH – OPENS UPON INCREASING TORQUE

DEVICES – FRONT PANEL

SYMBOL	DESCRIPTION
X	INDICATING LIGHT, LETTER "X" INDICATES COLOR: R=RED G=GREEN, A=AMBER, W=WHITE Y=YELLOW, B=BLUE
PTT X	INDICATING LIGHT, PUSH TO TEST
AMM	AMP METER
VM	VOLT METER
ETM	ELAPSED TIME METER
XS	MULTI–POSITION SWITCH WHERE LETTER "X" IS FUNCTION: A=AMP, V=VOLT

DEVICES – RELAY

SYMBOL	DESCRIPTION
M1	CONTACTOR OR STARTER M1
CR 1	CONTROL RELAY CR1
TR 2	TIME DELAY RELAY TR2 – ADJUSTABLE TIME DELAY RANGE & SETTING AS SHOWN
TDOE	TIME DELAY ON ENERGIZATION
TDOD	TIME DELAY ON DE–ENERGIZATION
107, 121	REFERENCED RELAY WITH N.O. CONTACT ON LINE 107 N.C. CONTACT ON LINE 121
CR1 (105)	NORMALLY OPEN, RELAY CONTACT – ACTUATED BY RELAY CR1 COIL LOCATED ON LINE 105
CR1	NORMALLY CLOSED, RELAY CONTACT – ACTUATED BY RELAY CR1
TR2	NORMALLY OPEN, TIME DELAY RELAY CONTACT – CONTACT CLOSES AFTER TR2 IS ENERGIZED
TR2	NORMALLY CLOSED, TIME DELAY RELAY CONTACT – CONTACT OPENS AFTER TR2 IS ENERGIZED
TR2	NORMALLY OPEN, TIME DELAY RELAY CONTACT – CONTACT OPENS AFTER TR2 IS DE–ENERGIZED
TR2	NORMALLY CLOSED, TIME DELAY RELAY CONTACT – CONTACT CLOSES AFTER TR2 IS DE–ENERGIZED
TR2	CONTACT OPENS AND CLOSES IN A TIMED REPEAT CYCLE
SV	SOLENOID COIL

DEVICES – PROTECTIVE

SYMBOL	DESCRIPTION
500A/3P LSI	CIRCUIT BREAKER, WITH AMPS OR POLES AS SHOWN OR NOTED PROVIDE TRIP UNIT AS SHOWN MCP– MOTOR CIRCUIT PROTECTOR TM– THERMAL MAGNETIC LSIG– LONG, SHORT, INST, GFI MCS– MOLDED CASE SWITCH, NO TRIP
OL	THERMAL OVERLOAD CONTACT
	THERMAL OVERLOAD ELEMENT
	FUSE WITH BLOWN FUSE INDICATING LIGHT
	FUSE
K	KIRK–KEY INTERLOCK
500A/3P DISC	DISCONNECT SWITCH, WITH POLES AS SHOWN OR NOTED PROVIDE AMP RATING OR HP RATING AS SHOWN

WIRING – CONNECTIONS

SYMBOL	DESCRIPTION
	PANEL OR EQUIPMENT WIRING
	FIELD WIRING
	CONDUCTORS – NOT CONNECTED
	CONDUCTORS – CONNECTED
	GROUND
	PLUG AND RECEPTACLE
	INCOMING LINE
123 123 123	TERMINAL BLOCKS WITH TERMINAL NUMBER AS SHOWN
	TERMINAL BLOCKS WITH TERMINAL NUMBER DETERMINED BY SUBMITTAL
SHIELD CONDUCTOR	SHIELDED CABLE

PLAN – SYMBOLS

SYMBOL	DESCRIPTION
	CONDUIT, EXPOSED
	CONDUIT, IN SLAB OR BELOW GRADE
	CONDUIT, CONCEALED IN WALL OR CEILING
	CONDUIT STUBBED OUT & CAPPED
	CONDUIT BENDS TOWARD OBSERVER
	CONDUIT BENDS AWAY FROM OBSERVER
	CONDUIT ENDS
	CONDUIT CHANGE IN ELEVATION
G	BARE COPPER GROUND WIRE
G	GROUND CONNECTION BOLTED TYPE
G	GROUND CONNECTION EXOTHERMIC WELD TYPE
	DISCONNECT SWITCH
	FIELD MOUNTED DEVICE
	SPECIAL RECEPTACLE
	TELEPHONE/DATA RECEPTACLE 2 PORT TA568A, 2 CAT 6 CABLES
#	CONDUIT NUMBER
T	THERMOSTAT
E	EYS SEAL
J	JUNCTION BOX
	PULL BOX OF SIZE SHOWN (CHRISTY BOX SIZE MINIMUM)
# A a	LIGHTING FIXTURE # – CIRCUIT BREAKER NUMBER A – FIXTURE SCHEDULE REF. a – CONTROL SWITCH REFERENCE
# #	DUPLEX AND QUADPLEX RECEPTACLE # – CIRCUIT BREAKER NUMBER
# $ 2 a	TOGGLE SWITCH # – CIRCUIT BREAKER NUMBER SUBSCRIPT – CIRCUIT CONTROLLED SUPERSCRIPT – BLANK = 1 POLE 2 = 2 POLE 3 = 3 WAY OTHER – M = MOTION DETECTOR T = TIMER SWITCH

MISCELLANEOUS ABBREVIATIONS

&	AND	MTR	MOTOR
@	AT	MUX	MULTIPLEXER
A	AMBER, AMPERES	MV	MERCURY VAPOR, MEDIUM VOLTAGE
AC	ALTERNATING CURRENT	N	NEUTRAL
ACK	ACKNOWLEDGE	NC	NORMALLY CLOSED
AFF	ABOVE FINISHED FLOOR	NHC	NORMALLY HELD CLOSED
AH	AMP HOUR	NHO	NORMALLY HELD OPEN
AI	ANALOG INPUT	NIC	NOT IN CONTRACT
AIC	AMP INTERRUPTING CAPACITY SYMMETRICAL	NL	NIGHT LIGHT
ALT	ALTERNATOR	NO	NORMALLY OPEN
AM	AMMETER	NTS	NOT TO SCALE
AO	ANALOG OUTPUT	(N)	NEW
AWG	AMERICAN WIRE GUAGE	OC	ON CENTER
BATT	BATTERY	OI	OPERATOR INTERFACE
(B)	PROVIDED BY OWNER – INSTALLED BY CONTRACTOR	OL	OVERLOAD
BFC	BELOW FINISHED CEILING	ORP	OXIDATION REDUCTION POTENTIAL
BOD	BIOCHEMICAL OXYGEN DEMAND	P	POLE
BPF	BAND PASS FILTER	PB	PUSHBUTTON
BYP	BYPASS	PBX	PULL BOX
C	CONDUIT	PF	POWER FACTOR
CAP	CAPACITOR	PFR	POWER FAIL RELAY
CB	CIRCUIT BREAKER	PH	HYDROGEN ION CONCENTRATION
CKT	CIRCUIT	PLC	PROGRAMMABLE LOGIC CONTROLLER
COAX	COAXIAL CABLE	PM	POWER MONITOR
COMM	COMMUNICATION	PNL	PANEL
CR	CONTROL RELAY	POT	POTENTIOMETER
CT	CURRENT TRANSFORMER	PRESS	PRESSURE
CS	CONSTANT SPEED	PR	PAIR, TWISTED AND SHIELDED
CU	COPPER	PRI	PRIMARY
DC	DIRECT CURRENT	PROVIDE	FURNISH, INSTALL, AND CONNECT
DET	DETAIL	PS	PRESSURE SWITCH
DI	DIGITAL INPUT	PT	POTENTIAL TRANSFORMER
DISC	DISCONNECT	PTT	PUSH TO TEST
DO	DIGITAL OUTPUT	PVC	POLYVINYLCHLORIDE
DPDT	DOUBLE POLE DOUBLE THROW	PWR	POWER
DWG	DRAWING	REF	REFERENCE
ELEV	ELEVATION	RFI	RADIO FREQUENCY INTERFERENCE
ENET	ETHERNET	RMS	ROOT MEAN SQUARE
ETM	ELAPSED TIME METER	RTD	RESISTANCE TEMPERATURE DETECTOR
ESW	ETHERNET SWITCH	RST	RESET
(E)	EXISTING	RVAT	REDUCE VOLTAGE AUTO TRANSFORMER
FCS	FIELD CONTROL STATION	RTU	REMOTE TERMINAL UNIT
FLA	FULL LOAD AMPS	(R)	REWIRE, RELOCATE, REVISE, REUSE
FLEX	FLEXIBLE LIQUID TIGHT CONDUIT	SCH	SCHEDULE
FRP	FIBERGLASS REINFORCED PLASTIC	SEC	SECONDARY, SECOND
FS	FULL SPEED	SECS	SECONDS
FVNR	FULL VOLTAGE NON–REVERSING	SEL	SELECTOR
FVR	FULL VOLTAGE REVERSING	SFA	SERVICE FACTOR AMPS
FWD	FORWARD	SPEC	SPECIFICATION
(F)	FUTURE	SS	STAINLESS STEEL
GALV	GALVANIZED	SSRC	STAINLESS STEEL RIGID CONDUIT
GFI	GROUND FAULT INTERRUPTER	SSS	SOLID STATE STARTER
GND	GROUND	STT	START
GRS	GALVANIZED RIGID STEEL CONDUIT	STP	STOP
GRS–PVC	PVC COATED GRS CONDUIT	SV	SOLENOID VALVE
HI	HIGH	SW	SWITCH
HIM	HUMAN INTERFACE MODULE	SWBD	SWITCHBOARD
HOA	HAND OFF AUTO	SYMM	SYMMETRICAL
HP	HORSE POWER	TB	TERMINAL BLOCK
HPS	HIGH PRESSURE SODIUM	TC	TIME CLOCK
HS	HAND SWITCH	TDOE	TIME DELAY ON DE–ENERGIZATION
HTR	HEATER	TDOD	TIME DELAY ON ENERGIZATION
HZ	HERTZ	TELCO	TELEPHONE COMPANY
HZD	HAZARD	TM	THERMAL MAGNETIC
I	INTERLOCK	TEMP	TEMPERATURE
I/O	INPUT/OUTPUT	TR	TIME DELAY RELAY
INST	INSTANTANEOUS	TRIAD	TWISTED AND SHIELDED 3 CONDUCTOR
ISR	INTRINSICALLY SAFE RELAY	TS	TEMPERATURE SWITCH
IS	INTRINSICALLY SAFE	TSPR	TWISTED AND SHIELDED PAIR
J	JUNCTION BOX	TYP	TYPICAL
K	KILO, PREFIX	UG	UNDERGROUND
LA	LIGHTNING ARRESTOR	ULH	ULTRA LOW HARMONIC
LC	LIGHTING CONTACTOR	UON	UNLESS OTHERWISE NOTED
LEL	LOWER EXPLOSION LIMIT	UPS	UNINTERRUPTIBLE POWER SUPPLY
LO	LOW	V	VOLTAGE
LOS	LOCK OUT STOP	VA	VOLT AMPS
LR	LATCHING RELAY	VAR	VOLT AMPS REACTIVE
LS	LIMIT SWITCH	VFD	VARIABLE FREQUENCY DRIVE
M	MOTOR CONTACTOR	VLV	VALVE
MAG	MAGNETIC FLOWMETER	VM	VOLTMETER
MAX	MAXIMUM	VMR	VOLTAGE MONITOR RELAY
MCM	THOUSAND CIRCULAR MILS	VR	VOLTAGE RELAY
MCP	MOTOR CIRCUIT PROTECTOR	W	WATTS
MCS	MOLDED CASE SWITCH	WP	WEATHER PROOF, NEMA 3R
MH	MANHOLE	WTP	WATER TREATMENT PLANT
MIN	MINIMUM, MINUTE	WWTP	WASTE WATER TREATMENT PLANT
MODEM	MODEM	XFMR	TRANSFORMER
MOV	MOTOR OPERATED VALVE	Z	IMPEDANCE
		ZS	LIMIT SWITCH

DATE: November 2008

LINE IS 2 INCHES AT FULL SIZE (IF NOT 2"–SCALE ACCORDINGLY)

FILE
DRAWN B. WOODIN
DESIGNED T. FRISCH
CHECKED T. FRISCH
CHECKED

REGISTERED PROFESSIONAL ENGINEER THOMAS P. FRISCH No. E15761 Exp. 09-30-10 ELECTRICAL STATE OF CALIFORNIA

LUHDORFF & SCALMANINI CONSULTING ENGINEERS

FRISCH ENGINEERING, INC.
CONSULTING ELECTRICAL ENGINEERS
110 BLUE RAVINE RD, SUITE 101 FOLSOM, CA 95630
PH 916 353 1025 FX 916 353 1028

FILE:0807D-E01.DWG DATE: Dec 01, 2008 TIME: 8:21:02AM

REVISIONS

ZONE	REV.	DESCRIPTION	BY	DATE	APP.

SACRAMENTO SUBURBAN WATER DIST.
VERNER AVENUE
WELL AND TREATMENT FACILITIES

SUBMITTED: DATE:
SUBMITTAL APPROVED: DATE:

ELECTRICAL SYMBOLS AND ABBREVIATIONS

SCALE: AS SHOWN

DRAWING NUMBER: E–1

SHEET NUMBER: 20 OF 52

P&ID ABBREVIATIONS

INSTRUMENTATION SYBMOLS

	FIRST LETTER		SUCCEEDING LETTERS		
	MEASURED OR INITIATING VARIABLE	MODIFIER	READOUT PASSIVE FUNCTION	OUTPUT FUNCTION	MODIFIER
A	ANALYSIS		ALARM		
B	BURNER, COMBUSTION		USER'S CHOICE	USER'S CHOICE	USER'S CHOICE
C	CONDUCTIVITY			CONTROLLER	
D	DENSITY	DIFFERENTIAL			
E	VOLTAGE		SENSOR, PRIMARY ELEMENT		
F	FLOW	RATIO			
G	GENERAL		GLASS VIEWING DEVICE		
H	HAND				HIGH, OPENED
I	CURRENT		INDICATING, INDICATOR		
J	POWER	SCAN			
K	TIME, TIME SCHEDULED	TIME RATE OF CHANGE		CONTROL STATION	
L	LEVEL		LIGHT		LOW, CLOSED
M	MOISTURE	MOMENTARY			MIDDLE
N	STATUS		STATUS	USER'S CHOICE	USER'S CHOICE
O	OPERTOR		ORIFICE, RESTRICTION		
P	PRESSURE, VACUUM		POINT (TEST) CONNECTION		
Q	QUANTITY	INTEGRATE, TOTALIZE			
R	RESET		RECORD		
S	SPEED, FREQUENCY	SAFETY		SWITCH	
T	TEMPERATURE			TRANSMITTER	TEST
U	MULTIVARIABLE		MULTIFUNCTION	MULTIFUNCTION	MULTIFUNCTION
V	VIBRATION			VAVE, DAMPER, LOUVER	
W	WEIGHT		WELL		
X	SWITCH	X AXIS	UNCLASSIFIED	UNCLASSIFIED	UNCLASSIFIED
Y	EVENT, STATE OF PRESENCE	Y AXIS		RELAY, COMPUTER, CONVERTER	
Z	POSITION, DIMENSION	Z AXIS		DRIVER, ACTUATOR, UNCLASSIFIED FINAL CONTROL ELEMENT	

P&ID ABBREVIATIONS

SWITCH IDENTIFIER

F/R	FORWARD/REVERSE	S/D	SHUTDOWN
HOA	HAND–OFF–AUTO	SEL	SELECTOR
HOR	HAND–OFF–REMOTE	S/S	START / STOP
LOS	LOCK OUT STOP	%	PERCENT ADJUSTMENT
MOA	MANUAL–OFF–AUTO		
OCA	OPEN–CLOSE–AUTO		
O/C	OPEN / CLOSE		
O/O	ON / OFF		
O/R	OVERRIDE		

FIXTURE SCHEDULE

CODE LETTER	FIXTURE TYPE	FIXTURE LAMPS	WATTS/ FIXTURE	MANUFACTURER OR APPROVED EQUAL	MOUNTING ARRANGEMENT	NOTES
A	FLUORESCENT LUMINAIRE, 4 FT MOLDED FIBERGLASS POLYESTER BODY VAPORTIGHT HIGH IMPACT ACRYLIC LENS	32W T8 2 EACH 120 VAC	64	DAY–BRITE V2W LITHONIA VRI–2	CEILING MOUNT OR PENDANT MOUNT AT 10 FT	UL LISTED FOR WET LOCATIONS LOW TEMP ELECTRONIC BALLAST
B	SECURITY LIGHT, VANDAL RESISTANT HEAVY DUTY, WEATHERPROOF DARK BRONZE POWDER COAT FINISH TAMPER PROOF ALUMINUM CASE	70W MH 1 EACH 120 VAC	80	LITHONIA MINI WALL PACK TWA	WALL MOUNT ON BUILDING AT 9 FEET	WITH PHOTOCELL CONTROL U.L. LISTED FOR WET LOCATIONS LIGHT SWITCH ENABLE/DISABLE
C	SECURITY LIGHT WEATHERPROOF, DIE CAST ALUMINUM DARK BRONZE FINISH	150W PAR38 2 EACH	300 120 VAC	HEATH/ZENITH	WALL MOUNT ON BUILDING AT 9 FEET	WITH PHOTOCELL CONTROL AND MOTION DETECTION U.L. LISTED FOR WET LOCATIONS AVAILABLE FROM HOME DEPOT
E	EMERGENCY LIGHT PACK WITH INTEGRAL BATTERY CHARGER NEMA 4X ENCLOSURE	9W TUNGSTEN 2 EACH 12 VOLT	18	MCPHILBEN NX	WALL MOUNT AT 8 FT	EXTERNAL MOUNTING FEET TEST SWITCH NICKEL CADMIUM BATTERIES
EF	EXHAUST FAN		1/4 HP 120 VAC 1 PHASE	PER M–12	WALL MOUNT	PROVIDE REMOTE THERMOSTAT 90 – 130 DEG F GRAINGER 2E340 OR EQUAL
AC	PAD MOUNT HVAC SPLIT SYSTEM	3 1/2 TON AC 230 VAC, 1PH	6000	PER M–12	WALL MOUNT ON BUILDING	PROGRAMMABLE 24VAC THERMOSTAT
PL	POLE MOUNTED FLOOD LIGHT 4" STRAIGHT STEEL POLE, 20 FT SHOEBOX CUTOFF TYPE 3 FIXTURE	150W MH 120 VAC	175	LITHONIA KAD	MOUNT ON DRILLED POLE BASE PER DETAILS	
PS	POLE MOUNTED FLOOD LIGHT 4" STRAIGHT STEEL POLE, 20 FT SHOEBOX CUTOFF TYPE 3 FIXTURE	150W INCANDESCENT	150	LITHONIA KAD	MOUNT ON DRILLED POLE BASE PER DETAILS	CUSTOM INCANDESCENT OR COMPACT FLUORESCENT BULB. INSTANT–ON REQUIRED. MOTION ACTIVATED.

P&ID SYMBOLS

ISA SYMBOLS

- FIELD MOUNTED INSTRUMENT
- INSTRUMENT MOUNTED ON DOOR OF LOCAL PANEL, OPERATOR ACCESSIBLE
- INSTRUMENT MOUNTED ON DOOR OF FIELD PANEL, OPERATOR ACCESSIBLE
- INSTRUMENT MOUNTED WITHIN PANEL, OPERATOR INACCESSIBLE
- INSTRUMENT MOUNTED WITHIN FIELD PANEL, OPERATOR INACESSIBLE
- OPERATION PERFORMED WITH LOGIC OR HARDWIRED DEVICES
- MCE–XX ASSOCIATED MOTOR CONTROL ELEMENTARY IF APPLICABLE
- UNIT VISUAL DISPLAY OF PLC ANALOG REGISTER SCALE TO UNITS AS SHOWN
- VISUAL DISPLAY OF PLC ANALOG ALARM REGISTER
- VISUAL DISPLAY OF PLC DIGITAL REGISTER
- VISUAL DISPLAY OF PLC DIGITAL ALARM REGISTER
- XX XX TAG DESCRIPTION
- LA??HH PLC I/O TAG
- PLC DIGITAL INPUT
- PLC DIGITAL OUTPUT
- ANALOG INPUT
- ANALOG OUTPUT
- AUDIBLE ALARM (BUZZER OR HORN)
- LAMP INDICATION COLOR DENOTED BY "X" RED, BLU, GRN, WHT, AMBER
- CONTINUATION TAG FROM ONE AREA TO ANOTHER AREA OF DIFFERENT DRAWINGS "a" TAG IDENTIFIER TO POINT ON DRAWING NUMBER XXXX.
- CONTINUED ON DWG I–X

LINE TYPES

- PRIMARY PROCESS LINE
- SECONDARY PROCESS LINE
- ELECTRICAL SIGNAL LINE (DIGITAL OR ANALOG)
- SOFTWARE OR DATA LINK
- BOUNDARY OF EQUIPMENT PACKAGE SYSTEM
- COMMUNICATION CONNECTION

VALVES

- GATE VALVE
- CHECK VALVE
- PLUG VALVE
- BALL VALVE
- BALL CHECK VALVE
- BUTTERFLY VALVE
- ANGLE VALVE
- NEEDLE VALVE
- RELIEF VALVE
- DIAPHRAGM VALVE
- 3–WAY VALVE
- FLOW CONTROL VALVE
- SOLENOID VALVE (2–WAY) (S → M FOR MOTORIZED VALVE)
- SOLENOID VALVE (3–WAY) (S → M FOR MOTORIZED VALVE)
- SOLENOID VALVE (4–WAY) (S → M FOR MOTORIZED VALVE)
- PNEUMATIC DIAPHRAGM CONTROL VALVE
- PRESSURE SUSTAINING VALVE
- PRESSURE REGULATING VALVE
- MULTIFUNCTION VALVE
- SLUICE GATE (SG) OR SLIDE GATE (SLG)
- AIR RELIEF VALVE (ARV)
- FLOAT VALVE
- STRAINER
- BACKFLOW PREVENTER
- CALIBRATION VALVE
- CALIBRATION COLUMN
- ROTAMETER
- UNION

ACTUATORS

- M MOTORIZED
- PNEUMATIC CYLINDER
- PNEUMATIC POSITIONER

PUMPS

- CENTRIFUGAL PUMP OR BLOWER
- SUBMERSIBLE SEWAGE PUMP
- VERTICAL TURBINE PUMP OR WELL PUMP
- SUBMERSIBLE WELL PUMP
- GEAR PUMP
- POSITIVE DISPLACEMENT PUMP OR BLOWER
- DIAPHRAGM PUMP
- PERISTALTIC PUMP
- M M MOTOR

ACTUATORS

- ORIFICE PLATE
- MAG MAGNETIC FLOWMETER
- % DENSITY METER
- ~ ULTRASONIC FLOWMETER
- TURBINE OR PROPELLER METER
- VENTURI TUBE
- LIT XXX ULTRASONIC LEVEL TRANSMITTER (FLOW IF OVER FLUME OR WEIR)
- LE XXX CONDUCTANCE TYPE LEVEL ELEMENTS
- LIT XXX RADAR TYPE LEVEL TRANSMITTER
- GUIDED OPTION
- LIT XXX CAPACITANCE TYPE LEVEL TRANSMITTER

MISCELLANEOUS MECHANICAL ITEMS

- PIPE REDUCER
- RUPTURE DISC
- PRESSURE OR VACUUM RELIEF VALVE
- DIAPHRAGM SEAL
- ANNUALAR SEAL
- MIXER
- F OR F FILTER
- VENT W/CAP OR SCREEN
- FLEXIBLE HOSE OR TUBING
- SPRAY NOZZLE SYSTEM
- STATIC MIXER
- EJECTOR / EDUCTOR
- HOSE COUPLING
- PULSATION DAMPENER
- OMNI ANTENNA NON–DIRECTIONAL
- YAGI ANTENNA DIRECTIONAL

DATE: November 2008

LINE IS 2 INCHES AT FULL SIZE (IF NOT 2"–SCALE ACCORDINGLY)

FILE
DRAWN B. WOODIN
DESIGNED T. FRISCH
CHECKED T. FRISCH
CHECKED

REGISTERED PROFESSIONAL ENGINEER THOMAS P. FRISCH No. E15761 Exp. 09–30–10 ELECTRICAL STATE OF CALIFORNIA

LUHDORFF & SCALMANINI CONSULTING ENGINEERS

FRISCH ENGINEERING, INC.
CONSULTING ELECTRICAL ENGINEERS
110 BLUE RAVINE RD, SUITE 101 FOLSOM, CA 95630
PH 916 353 1025 FX 916 353 1028

FILE:0807D-E02.DWG DATE: DEC 01, 2008 TIME: 8:21:12AM

REVISIONS

ZONE	REV.	DESCRIPTION	BY	DATE	APP.

SACRAMENTO SUBURBAN WATER DIST.
VERNER AVENUE
WELL AND TREATMENT FACILITIES

SUBMITTED: DATE:
SUBMITTAL APPROVED: DATE:

INSTRUMENTATION SYMBOLS AND ABBREVIATIONS

SCALE: AS SHOWN

DRAWING NUMBER: E–2

SHEET NUMBER: 21 OF 52

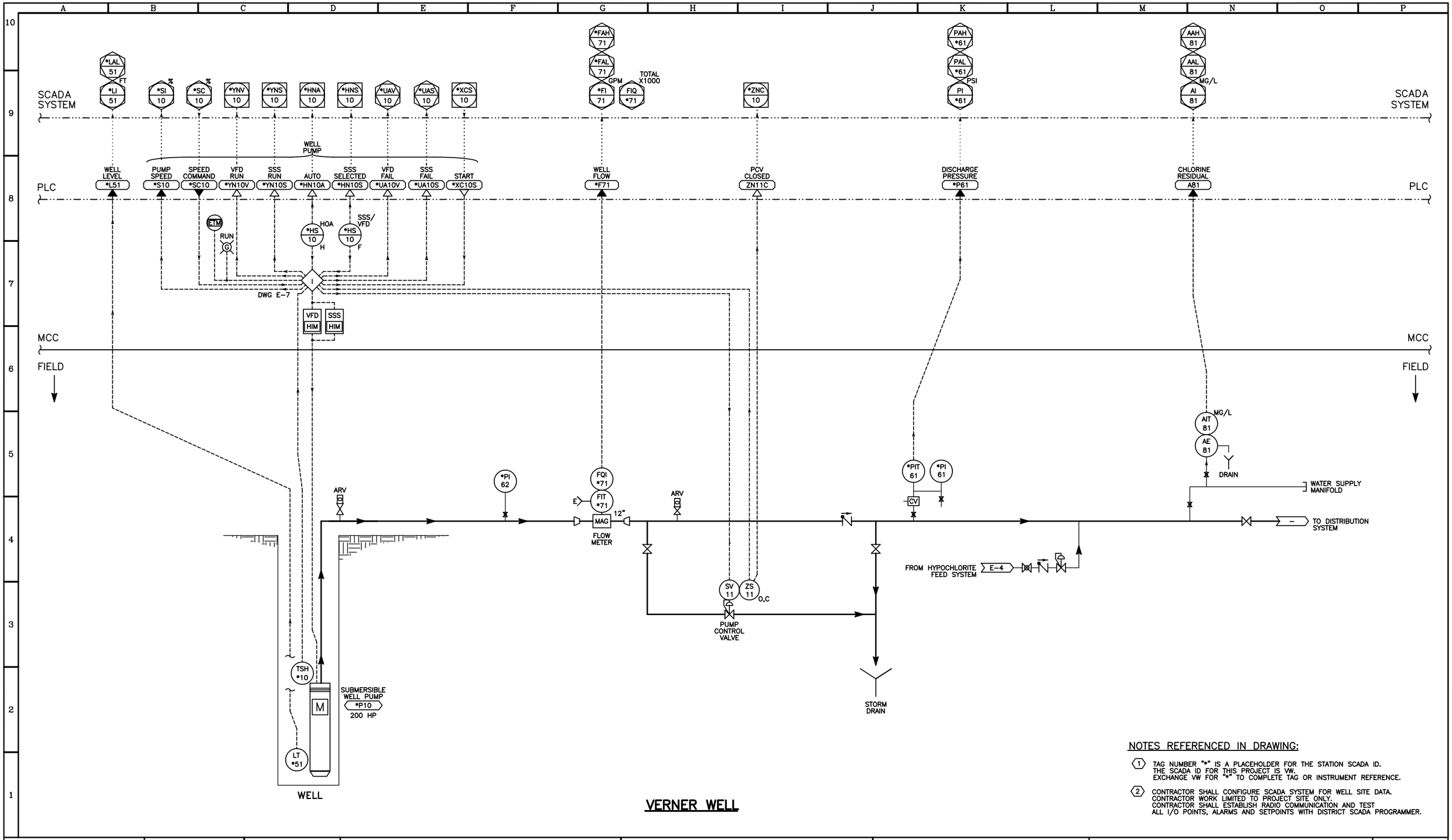

VERNER WELL

NOTES REFERENCED IN DRAWING:

1. TAG NUMBER "*" IS A PLACEHOLDER FOR THE STATION SCADA ID. THE SCADA ID FOR THIS PROJECT IS VW. EXCHANGE VW FOR "*" TO COMPLETE TAG OR INSTRUMENT REFERENCE.
2. CONTRACTOR SHALL CONFIGURE SCADA SYSTEM FOR WELL SITE DATA. CONTRACTOR WORK LIMITED TO PROJECT SITE ONLY. CONTRACTOR SHALL ESTABLISH RADIO COMMUNICATION AND TEST ALL I/O POINTS, ALARMS AND SETPOINTS WITH DISTRICT SCADA PROGRAMMER.

DATE: November 2008

LINE IS 2 INCHES AT FULL SIZE (IF NOT 2"-SCALE ACCORDINGLY)

FILE
DRAWN B. WOODIN
DESIGNED T. FRISCH
CHECKED T. FRISCH
CHECKED

REGISTERED PROFESSIONAL ENGINEER THOMAS P. FRISCH No. E15761 Exp. 09-30-10 ELECTRICAL STATE OF CALIFORNIA

LUHDORFF & SCALMANINI CONSULTING ENGINEERS

FRISCH ENGINEERING, INC.
CONSULTING ELECTRICAL ENGINEERS
110 BLUE RAVINE RD, SUITE 101 PH 916 353 1025
FOLSOM, CA 95630 FX 916 353 1028

FILE:0807D-E03.DWG DATE: DEC 01, 2008 TIME: 8:21:27AM

REVISIONS

ZONE	REV.	DESCRIPTION	BY	DATE	APP.

SACRAMENTO SUBURBAN WATER DIST.
VERNER AVENUE
WELL AND TREATMENT FACILITIES

SUBMITTED: _____ DATE: _____
SUBMITTAL APPROVED: _____ DATE: _____

PUMP STATION P&ID

SCALE: AS SHOWN

DRAWING NUMBER: E-3

SHEET NUMBER: 22 OF 52

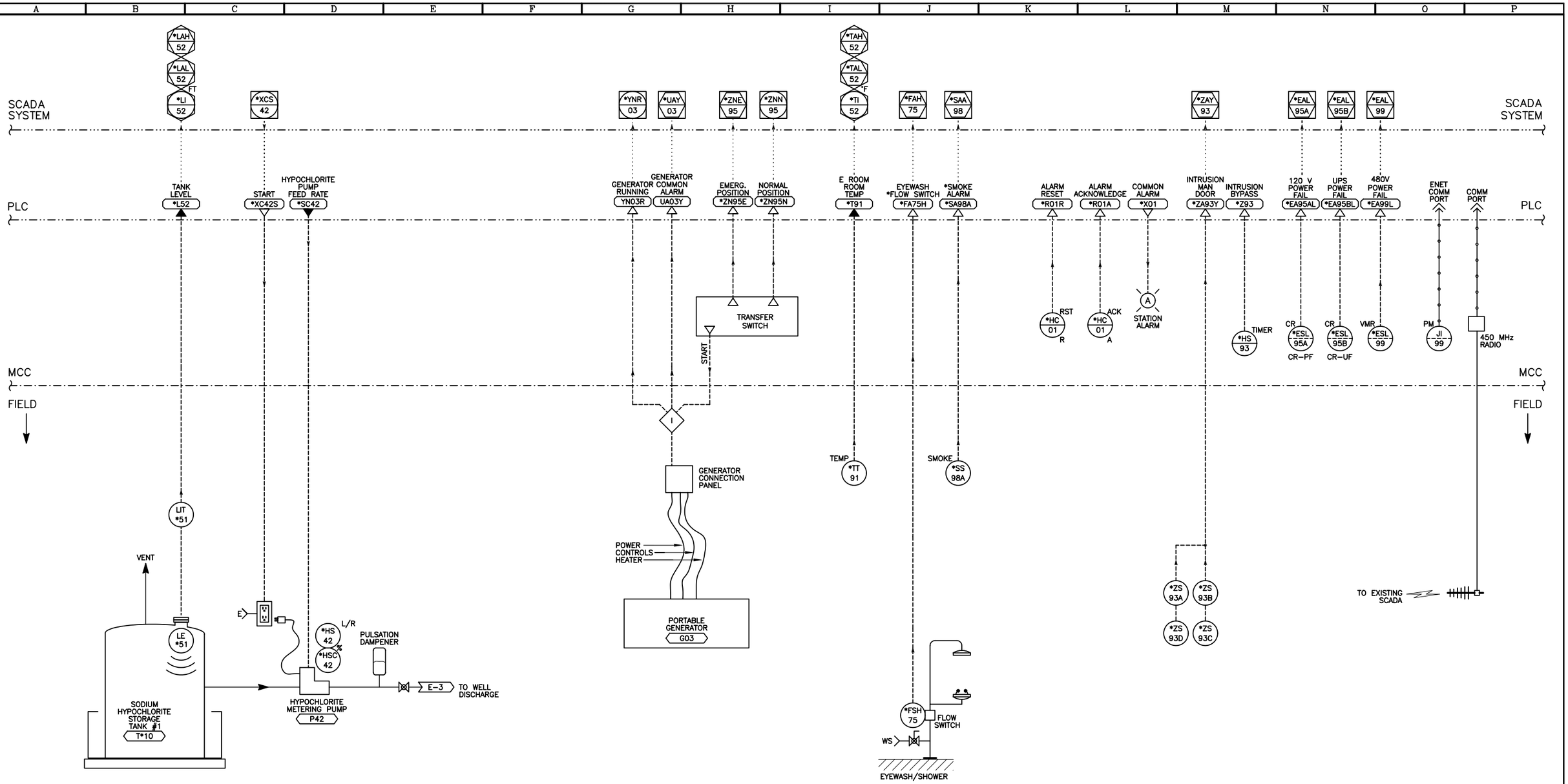

HYPOCHLORITE FEED SYSTEM

MISCELLANEOUS SYSTEMS

NOTES REFERENCED IN DRAWING:

1. TAG NUMBER "*" IS A PLACEHOLDER FOR THE STATION SCADA ID. THE SCADA ID FOR THIS PROJECT IS VW. EXCHANGE VW FOR "*" TO COMPLETE TAG OR INSTRUMENT REFERENCE.

DATE: November 2008

LINE IS 2 INCHES AT FULL SIZE (IF NOT 2"–SCALE ACCORDINGLY)

FILE
DRAWN B. WOODIN
DESIGNED T. FRISCH
CHECKED T. FRISCH
CHECKED

REGISTERED PROFESSIONAL ENGINEER — THOMAS P. FRISCH — No. E15761 — Exp. 09-30-10 — ELECTRICAL — STATE OF CALIFORNIA

LUHDORFF & SCALMANINI CONSULTING ENGINEERS

FRISCH ENGINEERING, INC.
CONSULTING ELECTRICAL ENGINEERS
110 BLUE RAVINE RD, SUITE 101 PH 916 353 1025
FOLSOM, CA 95630 FX 916 353 1028

FILE:0807D-E04.DWG DATE: DEC 01, 2008 TIME: 8:21:40AM

REVISIONS

ZONE	REV.	DESCRIPTION	BY	DATE	APP.

SACRAMENTO SUBURBAN WATER DIST.
VERNER AVENUE
WELL AND TREATMENT FACILITIES

SUBMITTED: _____ DATE: _____
SUBMITTAL APPROVED: _____ DATE: _____

HYPOCHLORITE AND MISCELLANEOUS P&ID

SCALE: AS SHOWN

DRAWING NUMBER: E-4

SHEET NUMBER: 23 OF 52

LOAD CALCULATIONS

LOAD DESCRIPTION	LOAD	QTY	TOTAL
200 HP PUMP	263.00 A	1	218654.1 VA
100 HP PUMP (FUTURE)	124.00 A	4	412366.7 VA
30 KVA PANELBOARD TRANSFORMER	24.64 A	1	11825.1 VA
TOTAL LOAD =	773.22 A		642845.9 VA
LOAD CORRECTION FACTORS			
LARGEST MOTOR LOAD x 25%:			
200 HP => 0.25 x 218654.1VA =	65.75 A		54663.5 VA
80% BREAKER DERATING = TOTAL x 0.25 =	209.74 A		174377.3 VA
FOR CONTINUOUS LOADS NEC 210-20			
UTILITY SERVICE SIZE (MIN) =	1048.72 A		871886.7 VA
480V, 3 PHASE, 4 WIRE			
UTILITY SERVICE SIZE PROPOSED =	1200 AMP		

PANEL "LP"

LOCATION: SWBE SECTION
ENCLOSURE: IN SWBD, NEMA 1A
AIC RATING: 10 KAIC

115/ 230 VOLTS, 1 PHASE, 3 WIRE
200 AMP BUS
170 AMP MAIN BREAKER

BKR NO.	DESCRIPTION	LOAD VA	LINE AMPS		AMPS/ POLE	BKR NO.	BKR NO.	AMPS/ POLE	LINE AMPS		LOAD VA	DESCRIPTION	BKR NO.
1	LIGHTING ELECTRICAL ROOM	198	1.7		20/1	1	2	20/1	4.3		500	CONTROL PANEL	2
3	LIGHTING PUMP ROOM	534		4.6	20/1	3	4	20/1		10.4	1200	CONTROL PANEL AUXILLIARY	4
5	LIGHTING CHEMICAL ROOM	366	3.2		20/1	5	6	10/1*	1.7		200	HYPOCHLORITE RECEPTACLE	6
7	LIGHTING OUTDOORS	300		2.6	20/1	7	8	10/1*		1.7	200	FLUORIDE RECEPTACLE	8
9	RECEPTACLES ELECTRICAL ROOM	900	7.8		20/1*	9	10	15-Jan	1.7		200	WELL PUMP CONTROLS	10
11	RECEPTACLES PUMP ROOM	1500		13.0	20/1*	11	12	20/1*		2.6	300	GENERATOR CONNECTION PANEL	12
13	RECEPTACLES CHEMICAL ROOM	900	7.8		20/1*	13	14	30/2	0.0		0	GENERATOR CONNECTION PANEL	14
15	EXHAUST FAN PUMP ROOM	400		3.5	20/1	15	16			0.0	0		16
17	EXHAUST FANS CHEMICAL ROOM	500	4.3		20/1	17	18	20/2	0.0		0	SPARE	18
19	ANTENNA POLE	0		0.0	20/1	19	20			0.0	0		20
21	MOTORIZED GATE	800	7.0		20/1	21	22	15-Jan	0.4		50	POWER MONITOR	22
23	SUMP PUMPS	800		7.0	20/1*	23	24	20/1		6.9	795	POLE LIGHTS	24
25	AIR CONDITIONER COMPRESSOR	2800	24.3		40/2	25	26	20/1	0.0		0	SPARE	26
27		2800		24.3		27	28	20/1		0.0	0	SPARE	28
29	AIR CONDITIONER CONDENSOR	300	2.6		20/1	29	30	20/2	0.0		0	SPARE	30
31	HVAC RECEPTACLE	300		2.6	20/1*	31	32			0.0	0		32
33	LANDSCAPE CONTROLLER	50	0.4		20/1	33	34	20/1	0.0		0	SPARE	34
35	SPARE	0		0.0	20/1	35	36	20/1		0.0	0	SPARE	36

PHASE	A	B
LEFT SIDE AMPS	59.25	57.69
LEFT SIDE KVA	6.81	6.63
TOTAL PHASE KVA	7.76	9.13
TOTAL PHASE AMPS	68	79
% OF AVERAGE	92	108

NEUTRAL

GROUND

A	B	PHASE
8.26	21.70	RIGHT SIDE AMPS
0.95	2.50	RIGHT SIDE KVA
16.89		TOTAL KVA
73.45		TOTAL AMPS @ 230V, 1P
0.70		DIVERSITY FACTOR
11.83		LOAD KVA

NOTES:
1 MEANS OF WIRE COLOR CODING SHALL BE POSTED ON PANELBOARD PER NEC 210 (4)
2 ASTERISK (*) DENOTES GFI BREAKER REQUIRED WITH 30 MA SENSITIVITY

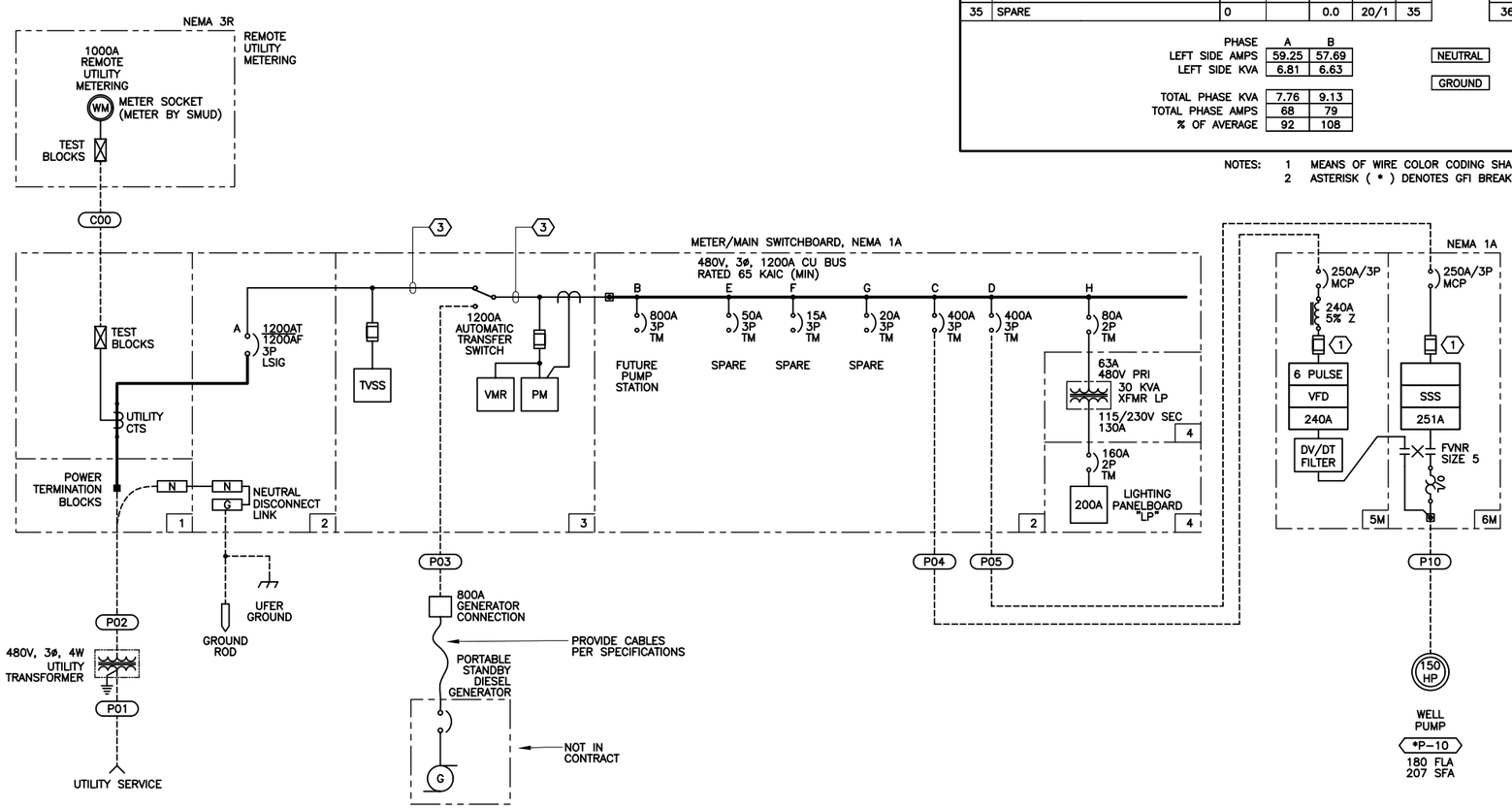

METER/MAIN SWITCHBOARD

MOTOR CONTROL CENTER

ONE-LINE DIAGRAM

NOTES REFERENCED IN DRAWING:

1. FUSE PER MANUFACTURER RECOMMENDATION
2. TAG NUMBER "*" IS A PLACEHOLDER FOR THE STATION LOCATION ID. THE LOCATION ID FOR THE MARY STREET LIFT STATION IS MSLS. EXCHANGE MSLS FOR "*" TO COMPLETE TAG OR INSTRUMENT REFERENCE.
3. CABLES SHALL BE CUT TO LENGTH, STRIPPED, AND FIT AT FACTORY. BRACE WIRES TO MAINTAIN 65K AIC RATING.

DATE: November 2008

LINE IS 2 INCHES AT FULL SIZE (IF NOT 2"-SCALE ACCORDINGLY)

FILE
DRAWN B. WOODIN
DESIGNED T. FRISCH
CHECKED T. FRISCH
CHECKED

REGISTERED PROFESSIONAL ENGINEER THOMAS P. FRISCH No. E15761 Exp. 09-30-10 ELECTRICAL STATE OF CALIFORNIA

LUHDORFF & SCALMANINI CONSULTING ENGINEERS

FRISCH ENGINEERING, INC.
CONSULTING ELECTRICAL ENGINEERS
110 BLUE RAVINE RD, SUITE 101 PH 916 353 1025
FOLSOM, CA 95630 FX 916 353 1028

FILE:0807D-E05.DWG DATE: DEC 01, 2008 TIME: 8:21:52AM

REVISIONS

ZONE	REV.	DESCRIPTION	BY	DATE	APP.

SACRAMENTO SUBURBAN WATER DIST.
VERNER AVENUE
WELL AND TREATMENT FACILITIES

SUBMITTED: DATE:
SUBMITTAL APPROVED: DATE:

ELECTRICAL ONE-LINE DIAGRAM

SCALE: AS SHOWN

DRAWING NUMBER: E-5

SHEET NUMBER: 24 OF 52

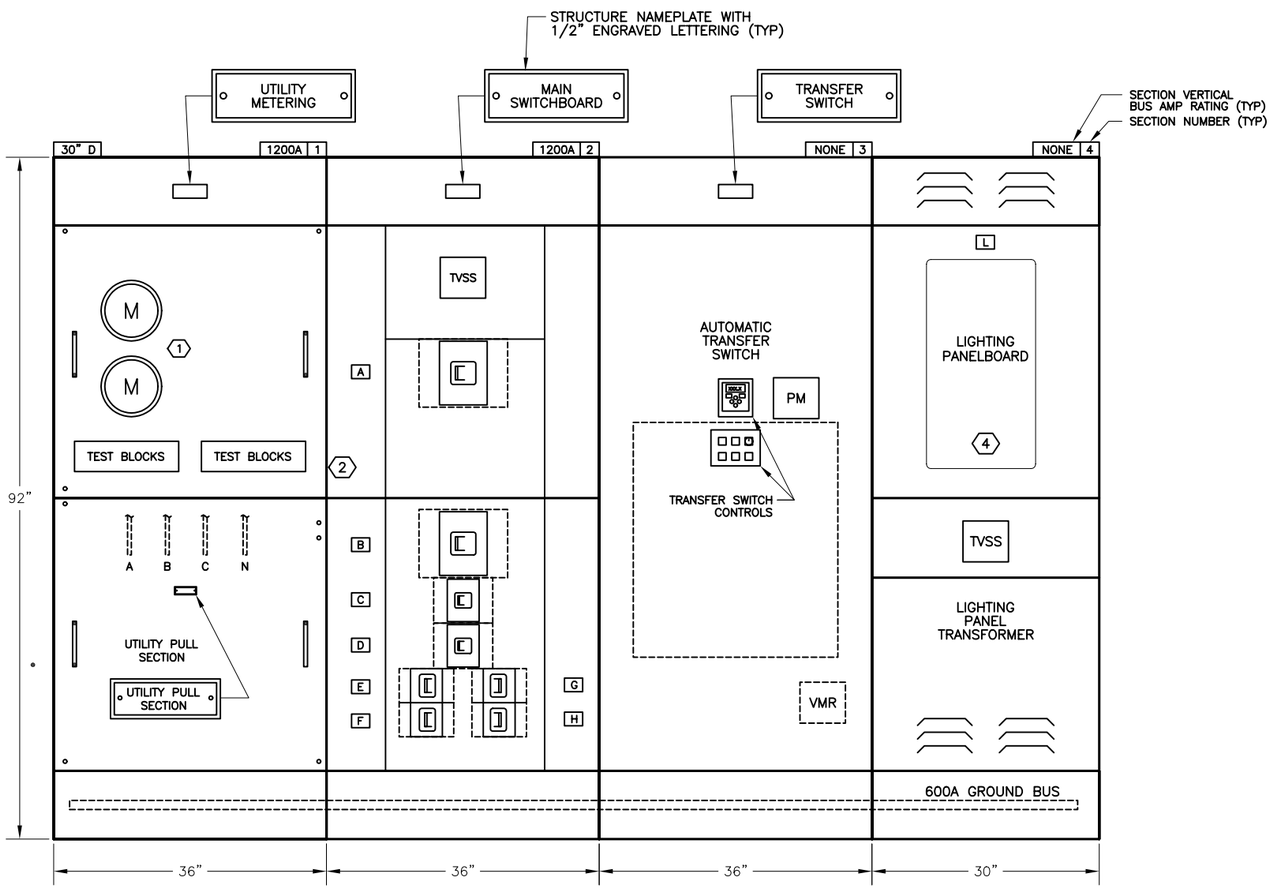

METER/MAIN SWITCHBOARD (MSB) ELEVATION 3

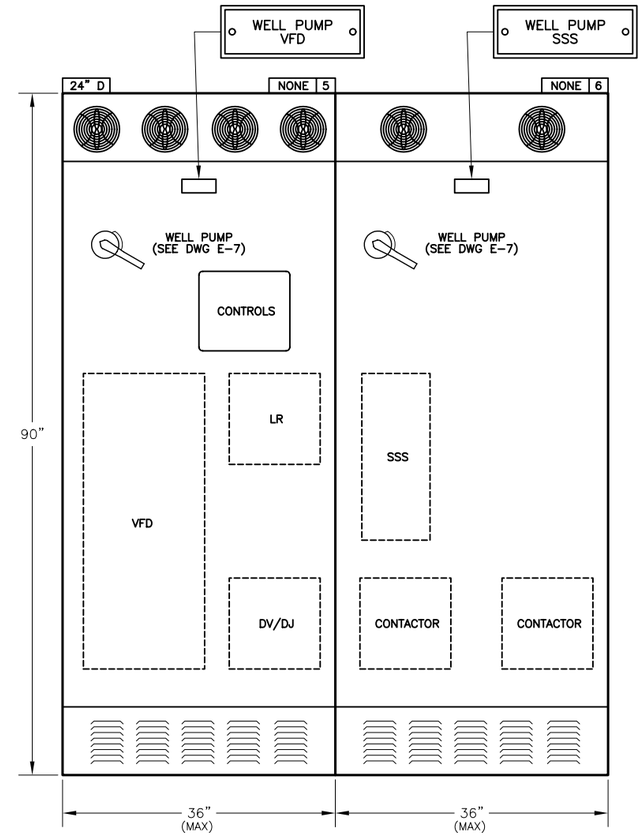

WELL PUMP MCC

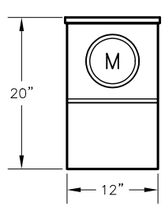

REMOTE METERING PANEL

NOTES:

1. METER TO BE SUPPLIED BY UTILITY. PROVIDE COMPATIBLE METER SOCKET(S).
2. CONNECTING CONDUIT TO MSB SHALL BE EXPOSED PER UTILITY REQUIREMENTS.
3. ENCLOSURE SHALL BE NEMA 3R RAINTIGHT, SUITABLE FOR OUTDOOR WALL MOUNTED INSTALLATION.
4. ENCLOSURE SHALL BE FABRICATED FROM SHEET STEEL WITH ANSI 61 GRAY ACRYLIC ELECTROCOAT FINISH.

NAMEPLATE SCHEDULE

KEY	ENGRAVING LINE 1	ENGRAVING LINE 2	LETTER HEIGHT
A	MAIN	DISCONNECT	3/16"
B	GENERATOR	DISCONNECT	3/16"
C	WELL PUMP VFD		3/16"
D	WELL PUMP SSS		3/16"
E	SPARE BREAKER		3/16"
F	SPARE BREAKER		3/16"
G	SPARE BREAKER		3/16"
H	TRANSFORMER LP	DISCONNECT	3/16"
L	PANELBOARD	LP	3/16"

NOTES REFERENCED IN DRAWING:

1. BLANK OFF METERING SOCKETS IN LIEU OF REMOTE METERING.
2. PROVIDE NAMEPLATES PER SCHEDULE THIS PAGE.
3. ALL BREAKERS SHALL HAVE PADLOCK HASPS.
4. PANELBOARD SHALL NOT HAVE AN OUTER DOOR OR SHALL HAVE TOOL-LESS DOOR ACCESS TO BREAKERS (THUMBSCREWS)

GENERAL NOTES:

1. REAR ACCESS SHALL NOT BE REQUIRED TO SERVICE OR REPLACE SWITCHBOARD COMPONENTS.
2. EACH BREAKER SHALL HAVE A PADLOCKABLE HASP TO LOCK BREAKER IN THE OFF POSITION.
3. ALL DIMENSIONS ARE APPROXIMATE. ACTUAL DIMENSIONS SHALL BE PER MANUFACTURER APPROVED IN SUBMITTAL.
4. MUST MEET EUSERC REQUIREMENTS AND ADDITIONAL REQUIREMENTS (IF ANY) OF SERVING UTILITY.

DATE: November 2008

LINE IS 2 INCHES AT FULL SIZE (IF NOT 2"-SCALE ACCORDINGLY)

FILE
DRAWN B. WOODIN
DESIGNED T. FRISCH
CHECKED T. FRISCH
CHECKED

REGISTERED PROFESSIONAL ENGINEER THOMAS P. FRISCH No. E15761 Exp. 09-30-10 ELECTRICAL STATE OF CALIFORNIA

LUHDORFF & SCALMANINI CONSULTING ENGINEERS
FRISCH ENGINEERING, INC.
CONSULTING ELECTRICAL ENGINEERS
110 BLUE RAVINE RD, SUITE 101 PH 916 353 1025
FOLSOM, CA 95630 FX 916 353 1028

FILE:0807D-E06.DWG DATE: DEC 01, 2008 TIME: 8:22:02AM

REVISIONS

ZONE	REV.	DESCRIPTION	BY	DATE	APP.

SACRAMENTO SUBURBAN WATER DIST.
VERNER AVENUE
WELL AND TREATMENT FACILITIES

SUBMITTED: DATE:
SUBMITTAL APPROVED: DATE:

ELECTRICAL MCC ELEVATION

SCALE: AS SHOWN

DRAWING NUMBER: E-6

SHEET NUMBER: 25 OF 52

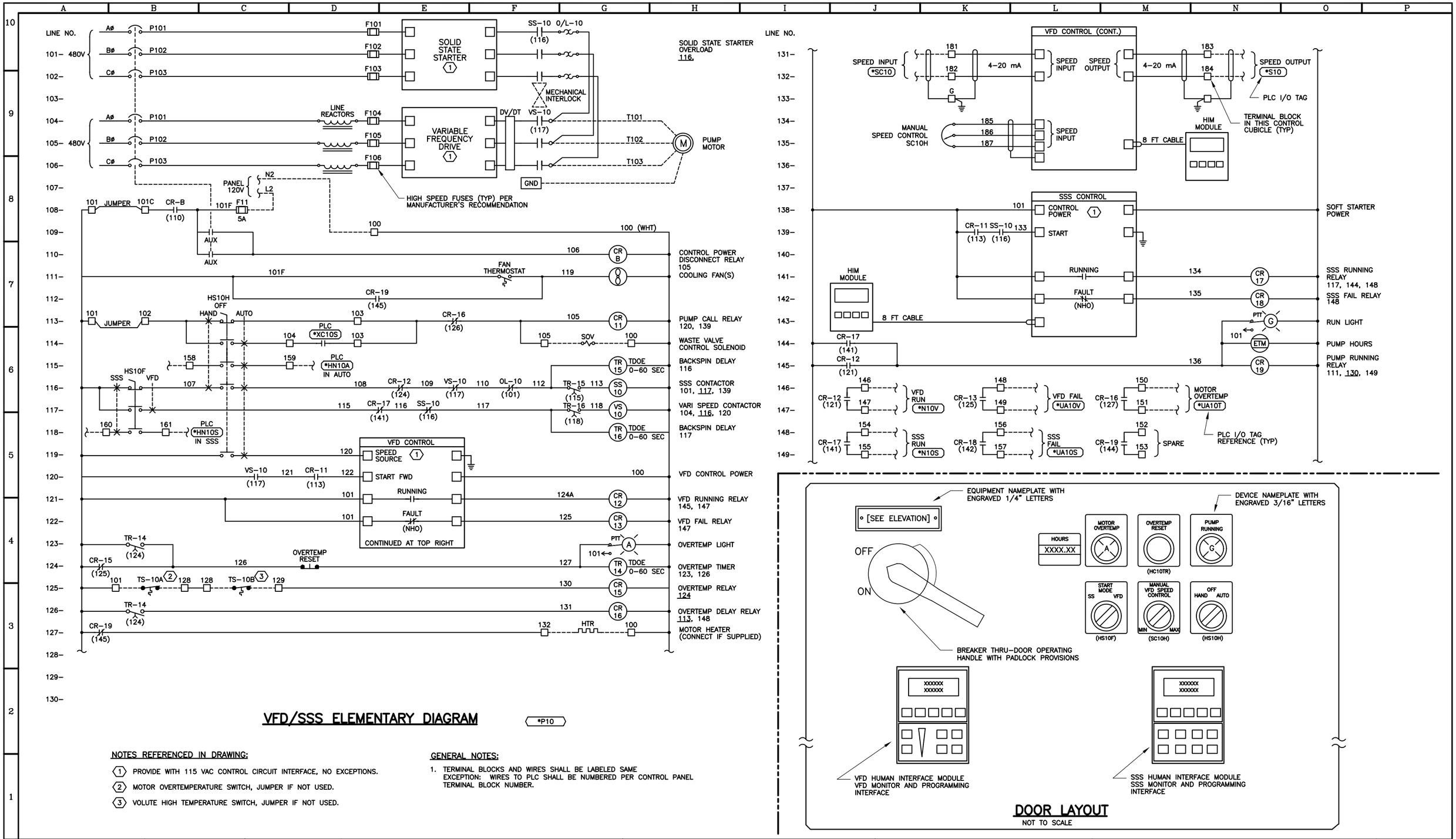

VFD/SSS ELEMENTARY DIAGRAM

*P10

NOTES REFERENCED IN DRAWING:

1. PROVIDE WITH 115 VAC CONTROL CIRCUIT INTERFACE, NO EXCEPTIONS.
2. MOTOR OVERTEMPERATURE SWITCH, JUMPER IF NOT USED.
3. VOLUTE HIGH TEMPERATURE SWITCH, JUMPER IF NOT USED.

GENERAL NOTES:

1. TERMINAL BLOCKS AND WIRES SHALL BE LABELED SAME
   EXCEPTION: WIRES TO PLC SHALL BE NUMBERED PER CONTROL PANEL TERMINAL BLOCK NUMBER.

DOOR LAYOUT

NOT TO SCALE

DATE: November 2008

LINE IS 2 INCHES AT FULL SIZE (IF NOT 2"-SCALE ACCORDINGLY)

FILE
DRAWN B. WOODIN
DESIGNED T. FRISCH
CHECKED T. FRISCH
CHECKED

REGISTERED PROFESSIONAL ENGINEER THOMAS P. FRISCH No. E15761 Exp. 09-30-10 ELECTRICAL STATE OF CALIFORNIA

LUHDORFF & SCALMANINI CONSULTING ENGINEERS

FRISCH ENGINEERING, INC.
CONSULTING ELECTRICAL ENGINEERS
110 BLUE RAVINE RD, SUITE 101
FOLSOM, CA 95630
PH 916 353 1025
FX 916 353 1028

FILE:0807D-E07.DWG DATE: Dec 01, 2008 TIME: 8:22:11AM

REVISIONS

ZONE	REV.	DESCRIPTION	BY	DATE	APP.

SACRAMENTO SUBURBAN WATER DIST.
VERNER AVENUE
WELL AND TREATMENT FACILITIES

SUBMITTED: DATE:
SUBMITTAL APPROVED: DATE:

PUMP ELEMENTARY DIAGRAM

SCALE: AS SHOWN

DRAWING NUMBER: E-7

SHEET NUMBER: 26 OF 52

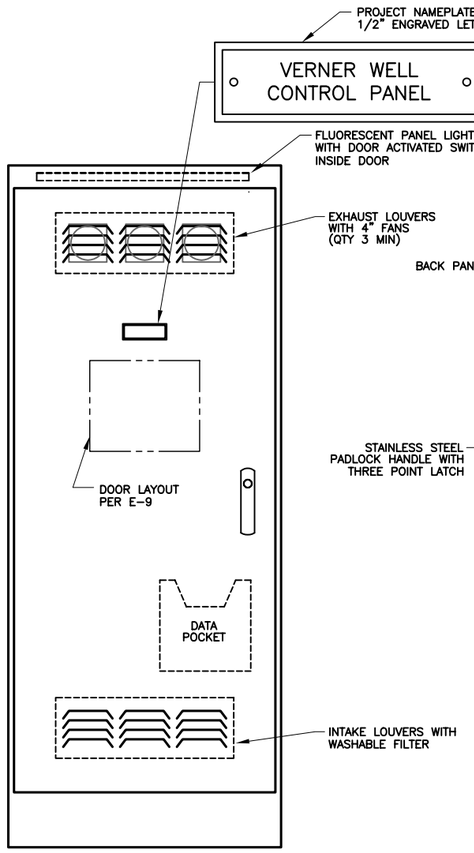

FRONT ELEVATION

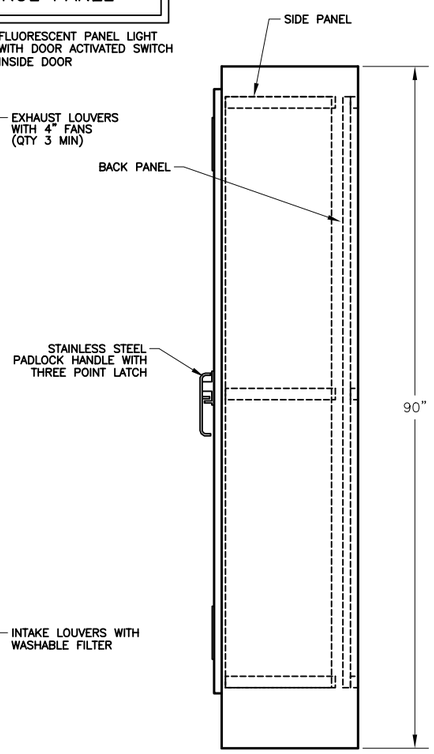

SIDE ELEVATION

ELEVATION

SCALE: 1" = 20"

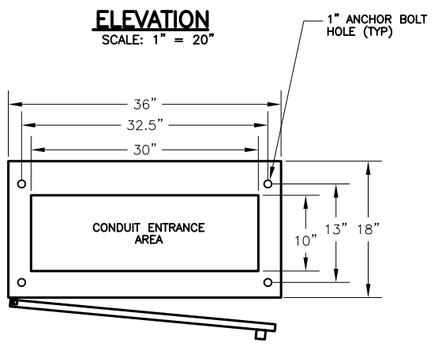

BASE PLAN

SCALE: 1" = 20"

PANEL FABRICATION METHODS

1. NEMA 12, OPEN BOTTOM.
2. OUTER DOOR SEALED WITH RUBBERIZED FOAM GASKET.
3. PANEL SHALL BE FABRICATED FROM PAINT BOND GALVANEAL SHEET STEEL.
4. 12 GAUGE EXTERIOR AND 14 GAUGE INTERIOR.
5. ALL SEAMS SHALL HAVE CONTINUOUS WELD GROUND SMOOTH.
6. DOOR TO BE PADLOCKABLE WITH HEAVY DUTY 3 POINT LATCH.
7. DOOR HINGES AND PINS SHALL BE CONTINUOUS, HEAVY DUTY.
8. NO SCREWS, RIVETS, OR BOLTS SHALL PROTRUDE EXTERNALLY.
9. INTERNAL SCREWS, RIVETS, BOLTS, AND NUTS SHALL BE MACHINE THREAD INTO TAPPED BACKPAN.
10. EXTERIOR PANEL COLOR: ANSI 61 GRAY.
11. MOUNTING PAN AND INTERIOR DOOR COLOR: WHITE.
12. FABRICATION AND WIRING SHALL CONFORM TO U.L. AND NEMA STANDARDS.
13. ALL WIRING SHALL BE PERMANENTLY LABELED WITH WIRE MARKERS ON BOTH ENDS.
14. WIRING DIAGRAMS SHALL BE PLACED IN A PLASTIC DRAWING HOLDER PERMANENTLY ATTACHED TO THE INSIDE OF THE FRONT DOOR.
15. AS - BUILT WIRING DIAGRAMS SHALL BE SHIPPED WITH EQUIPMENT.
16. UPS SHELF SHALL BE 14GA PAINTED STEEL BOLTED TO SIDEPAN.

GENERAL NOTES:

1. REPRESENTATIVE OF MAJOR COMPONENTS ONLY. ACTUAL BACKPAN LAYOUT SHALL BE SIMILAR TO LAYOUT SHOWN. SUBMIT SCALED BACKPAN LAYOUT FOR REVIEW BY ENGINEER.
2. QUANTITY OF TERMINAL BLOCKS AND RELAYS SHALL BE AS DETERMINED BY P&IDS AND EXAMPLE I/O WIRING DIAGRAM

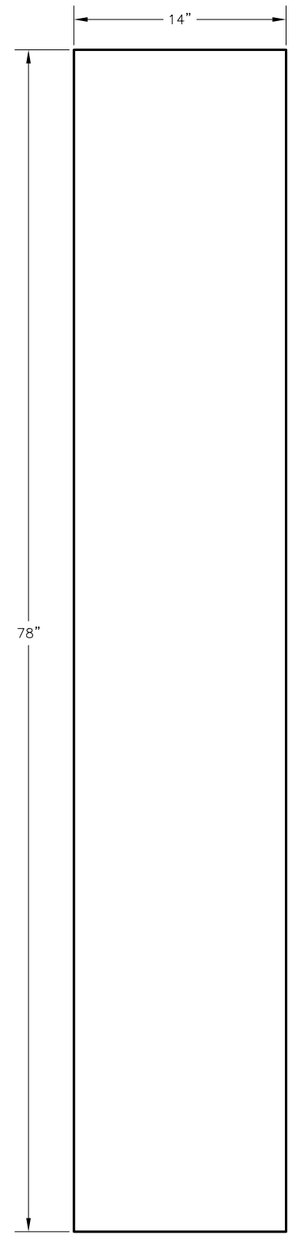

LEFT

SIDEPAN LAYOUT

SCALE: 1" = 10"

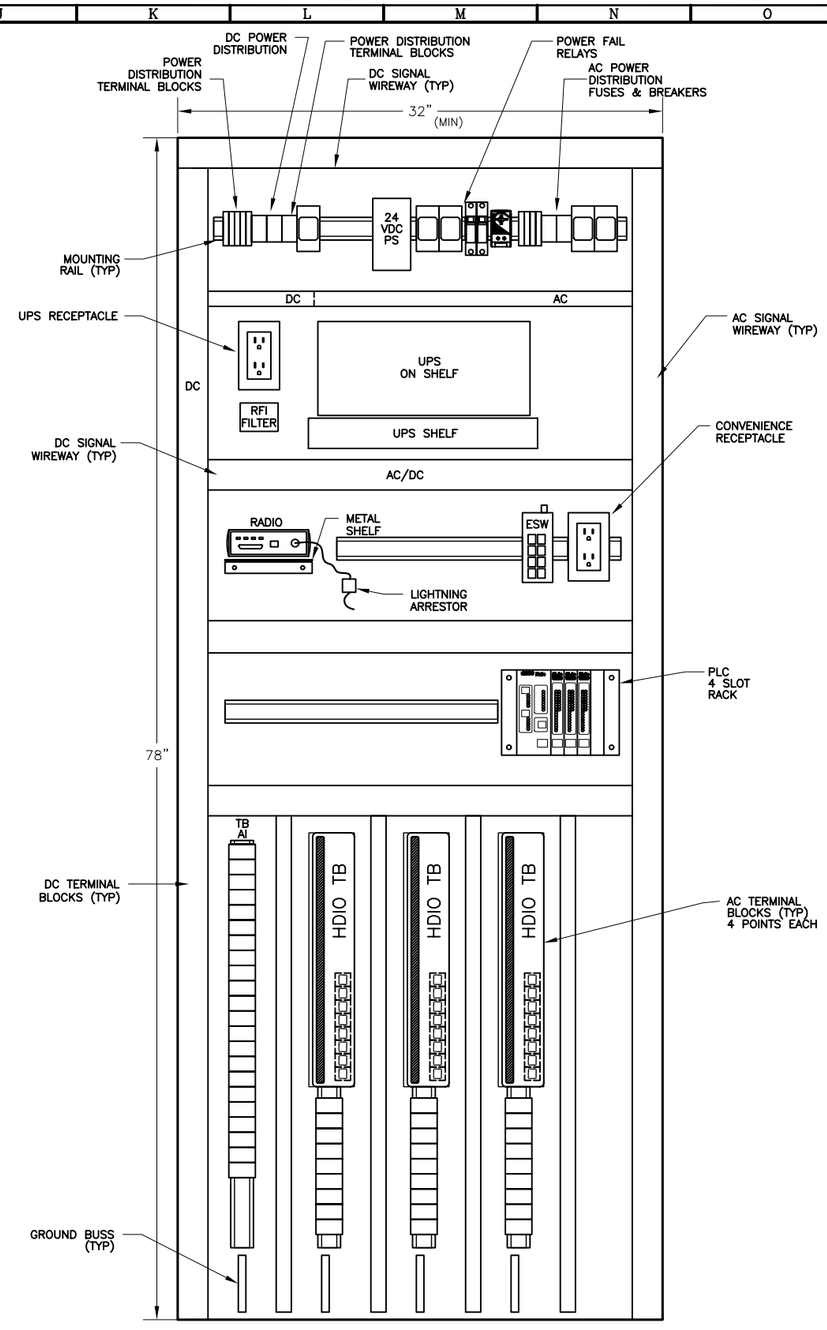

CENTER

BACKPAN LAYOUT

SCALE: 1" = 10"

DATE: November 2008

LINE IS 2 INCHES AT FULL SIZE (IF NOT 2"-SCALE ACCORDINGLY)

FILE
DRAWN B. WOODIN
DESIGNED T. FRISCH
CHECKED T. FRISCH
CHECKED

REGISTERED PROFESSIONAL ENGINEER THOMAS P. FRISCH No. E15761 Exp. 09-30-10 ELECTRICAL STATE OF CALIFORNIA

LUHDORFF & SCALMANINI CONSULTING ENGINEERS

FRISCH ENGINEERING, INC.
CONSULTING ELECTRICAL ENGINEERS
110 BLUE RAVINE RD, SUITE 101 PH 916 353 1025
FOLSOM, CA 95630 FX 916 353 1028

FILE:0807D-E08.DWG DATE: Dec 01, 2008 TIME: 8:22:24AM

REVISIONS

ZONE	REV.	DESCRIPTION	BY	DATE	APP.

SACRAMENTO SUBURBAN WATER DIST.
VERNER AVENUE
WELL AND TREATMENT FACILITIES

SUBMITTED: DATE:
SUBMITTAL APPROVED: DATE:

CONTROL PANEL ELEVATION AND BACKPAN LAYOUT

SCALE: AS SHOWN

DRAWING NUMBER E-8

SHEET NUMBER 27 OF 52

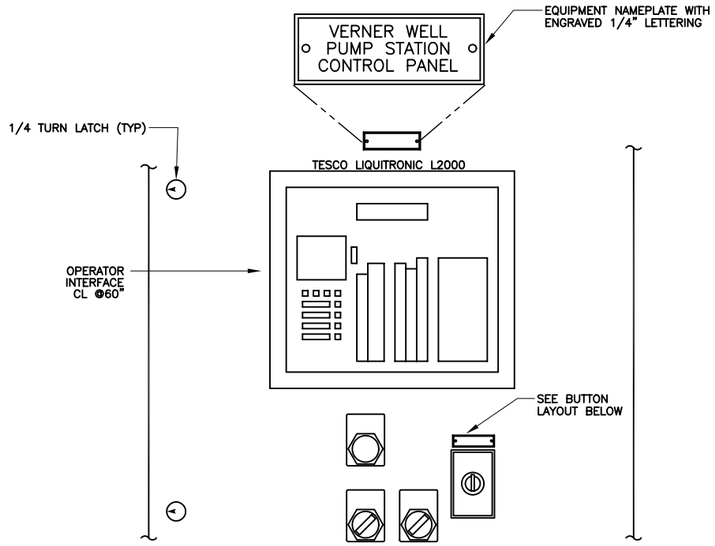

CONTROL PANEL ELEVATION DOOR LAYOUT

NOT TO SCALE

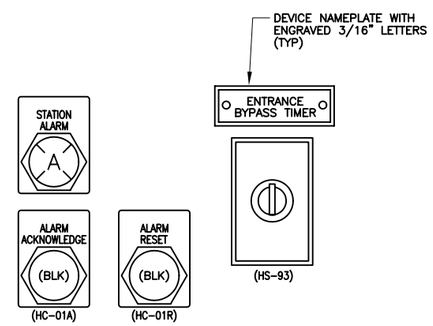

BUTTON LAYOUT

NOT TO SCALE

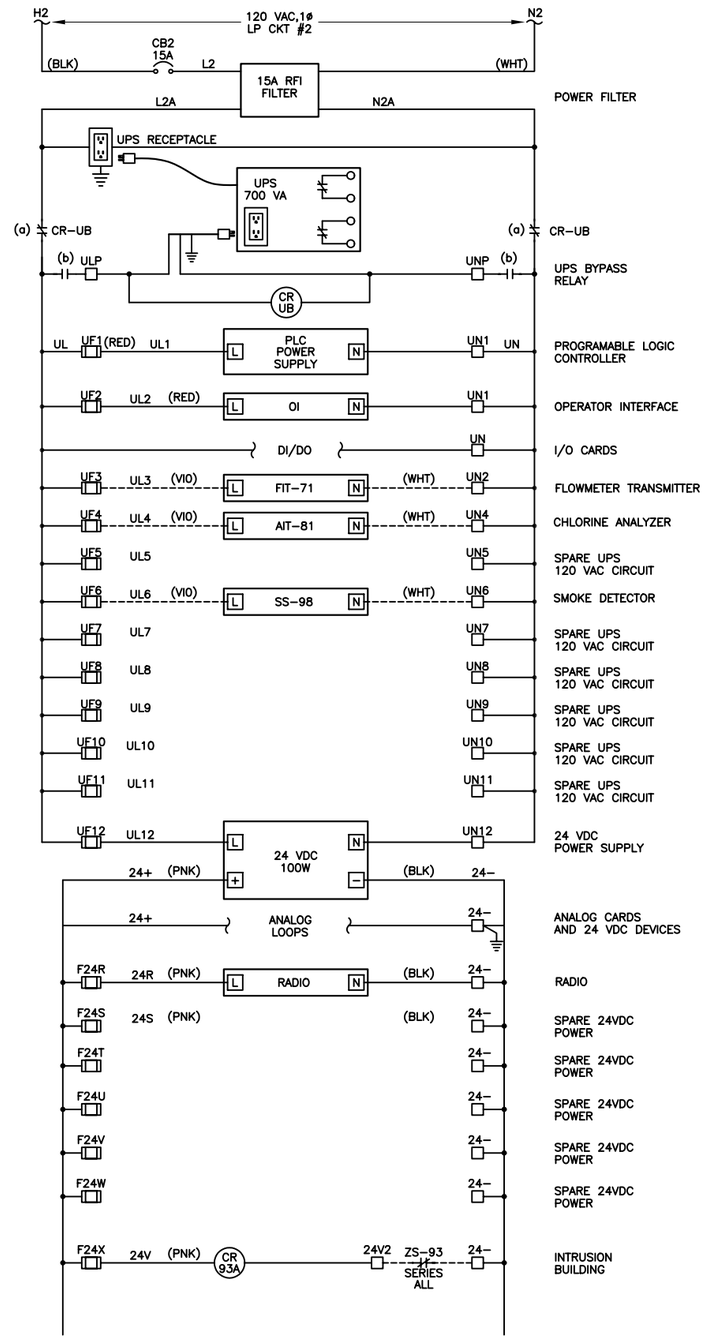

POWER DISTRIBUTION BLOCK SCHEMATIC (1)

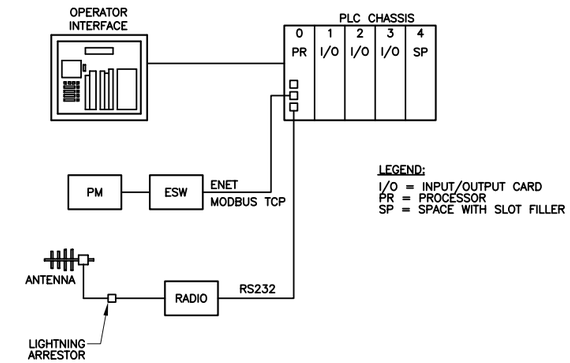

PLC BLOCK DIAGRAM

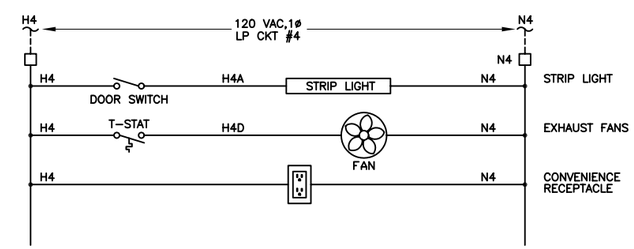

CONTROL PANEL AUXILLIARY

SCHEMATIC REFERENCED NOTES:

(1) DISTRIBUTION DIAGRAM REPRESENTATIVE OF MAJOR COMPONENTS ONLY. ADDITIONAL FUSES, CIRCUITS AND COMPONENT CONNECTIONS MAY BE REQUIRED FOR A FUNCTIONAL SYSTEM.

GENERAL NOTES:

1. REMAINING WIRES AND TERMINALS SHALL BE NUMBERED BY MANUFACTURER DURING SUBMITTAL.

DATE: November 2008

LINE IS 2 INCHES AT FULL SIZE (IF NOT 2"-SCALE ACCORDINGLY)

FILE
DRAWN B. WOODIN
DESIGNED T. FRISCH
CHECKED T. FRISCH
CHECKED

REGISTERED PROFESSIONAL ENGINEER THOMAS P. FRISCH No. E15761 Exp. 09-30-10 ELECTRICAL STATE OF CALIFORNIA

LUHDORFF & SCALMANINI CONSULTING ENGINEERS

FRISCH ENGINEERING, INC.
CONSULTING ELECTRICAL ENGINEERS
110 BLUE RAVINE RD, SUITE 101 PH 916 353 1025
FOLSOM, CA 95630 FX 916 353 1028

FILE:0807D-E09.DWG DATE: DEC 01, 2008 TIME: 8:22:32AM

REVISIONS

ZONE	REV.	DESCRIPTION	BY	DATE	APP.

SACRAMENTO SUBURBAN WATER DIST.
VERNER AVENUE
WELL AND TREATMENT FACILITIES

SUBMITTED: _____ DATE: _____
SUBMITTAL APPROVED: _____ DATE: _____

CONTROL PANEL WIRING AND LAYOUT

SCALE: AS SHOWN

DRAWING NUMBER: E-9

SHEET NUMBER: 28 OF 52

DRAWING REFERENCED NOTES:

1. JUNCTION BOX SHALL BE NEMA 4X PVC, HINGED SOLID DOOR, 10" X 8" X 6", HOFFMAN CHSCFG OR EQUAL. PROVIDE NON-METALLIC CORD GRIP CONNECTIONS TO PUMP, FLOW SWITCH, AND LEVEL ELEMENT. CORD GRIPS SHALL BE OLFLEX SKINTOP OR EQUAL.
2. ALL EXPOSED CONDUIT SHALL BE PVC-80 IN CHEMICAL ROOMS. EXPOSED CONDUIT IN PUMP AND ELECTRICAL ROOM SHALL BE GRS.
3. CONNECT LEVEL TRANSMITTER TO JUNCTION BOX WITH 2 – 3/4" PVC CONDUITS.
4. FURNISH 16" X 20" X 8" PAINTED STEEL (10GA) NEMA 3R, PADLOCKABLE, HINGED DOOR JUNCTION BOX. BOX SHALL BE LEMEUR WELDING SAFEGUARD OR EQUAL. PAINT ENCLOSURE TO MATCH BUILDING WALL.

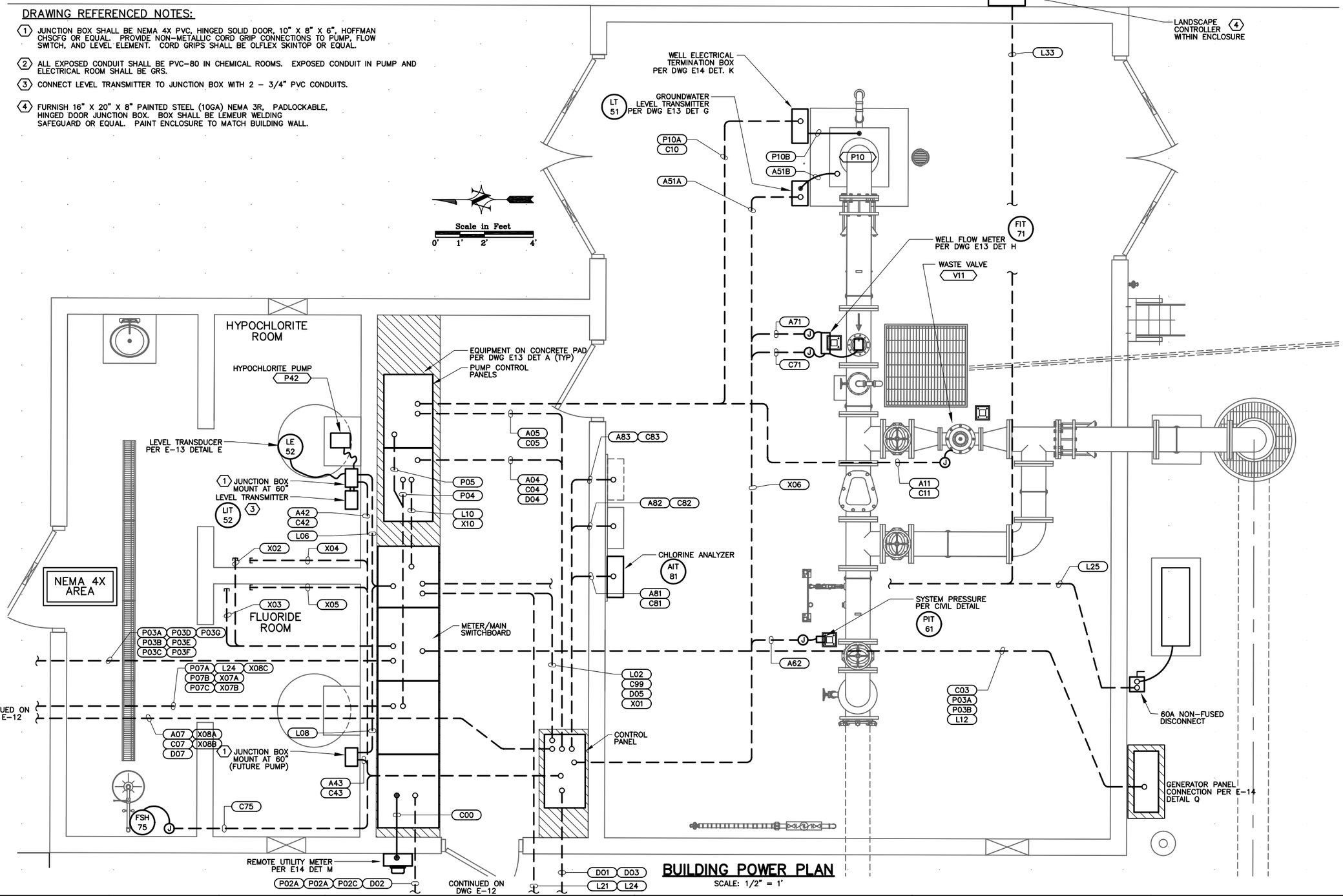

BUILDING POWER PLAN

SCALE: 1/2" = 1'

DATE: November 2008	LINE IS 2 INCHES AT FULL SIZE (IF NOT 2"-SCALE ACCORDINGLY)	REGISTERED PROFESSIONAL ENGINEER THOMAS P. FRISCH No. E15761 Exp. 09-30-10 ELECTRICAL STATE OF CALIFORNIA	LUHDORFF & SCALMANINI CONSULTING ENGINEERS FRISCH ENGINEERING, INC. CONSULTING ELECTRICAL ENGINEERS 110 BLUE RAVINE RD, SUITE 101 FOLSOM, CA 95630 PH 916 353 1025 FX 916 353 1028 FILE:0807D-E10.DWG DATE: DEC 01, 2008 TIME: 8:22:45AM	REVISIONS	SACRAMENTO SUBURBAN WATER DIST. *VERNER AVENUE* *WELL AND TREATMENT FACILITIES*	BUILDING POWER PLAN	SCALE AS SHOWN
	FILE DRAWN B. WOODIN DESIGNED T. FRISCH CHECKED T. FRISCH CHECKED			ZONE / REV. / DESCRIPTION / BY / DATE / APP.	SUBMITTED: DATE: SUBMITTAL APPROVED: DATE:		DRAWING NUMBER E-10 SHEET NUMBER 29 OF 52

GENERAL NOTES THAT APPLY TO LIGHTING AND RECEPTACLE PLAN.

1. THESE NOTES SHALL APPLY TO ALL EQUIPMENT OR FIXTURES WITH ELECTRICAL CONNECTIONS BUT WITHOUT CONDUITS SHOWN, CONDUIT NUMBERS, OR NOT LISTED IN SCHEDULE.
2. PROVIDE AND INSTALL NECESSARY WIRES IN SURFACE MOUNT 3/4" (MINIMUM) CONDUIT FOR FOR ELECTRICAL FIXTURE ARRANGEMENT AS SHOWN. MAXIMUM 3 CIRCUITS PER CONDUIT SECTION OVER 24" IN LENGTH. CONDUITS SHALL NOT EXCEED 40% FILL.
3. CONDUITS UNDER SLAB SHALL BE PVC-80 WITH STUB-OUTS PER EXPOSED CONDUIT TRANSITION DETAIL.
4. CONDUITS ABOVE CEILING SHALL BE EMT WITH COMPRESSION STYLE FITTINGS. CONDUITS BELOW CEILING SHALL BE GRS. ACCESS TO ATTIC AREA SHALL NOT BE REQUIRED TO INSTALL CONDUCTORS. CONDUITS IN AND SUPPORTS IN CHEMICAL ROOM SHALL BE PVC-80 (NON-METALLIC).
5. DEVICE BOXES AND CONDUIT BODIES SHALL BE CAST IRON OR ALUMINUM WITH THREADED HUB. USE ALL PVC-80 IN CHEMICAL ROOM MOUNTED ON NON-METALLIC STRUT.
6. CONDUCTORS SHALL BE COPPER TYPE THHN, CLASS C STRANDING, #12 AWG (MINIMUM).
7. MOUNT CONDUITS USING SINGLE BOLT GALVANIZED PIPE STRAPS AND CLAMP BACK SPACERS.
8. USE SS EXPANSION WEDGE ANCHORS OR EPOXY ANCHORS AS NECESSARY FOR EQUIPMENT MOUNTING.
9. EXPOSED CONDUIT SHALL BE PAINTED WITH WALL AND/OR CEILING AS SPECIFIED.
10. PROVIDE AND INSTALL FIXTURES PER SCHEDULE DWG E-2, QUANTITY AS SHOWN IN THIS DRAWING.
11. PROVIDE AND INSTALL ALL DEVICE BOXES, JUNCTION BOXES, RECEPTACLES, SWITCHES, AND COVERS MOUNT ALL RECEPTACLES AT 18" AFF UNLESS OTHERWISE NOTED.
12. DEVICES TO BE GROUND FAULT INTERRUPTER (GFI) TYPE AND WEATHERPROOF (WP) WHERE SHOWN.
13. SEE ELECTRICAL SYMBOLS AND ABBREVIATIONS DRAWING FOR SYMBOL DEFINITION.
14. ALL WORK SHALL CONFORM TO LOCAL CODES AND 2004 CALIFORNIA ELECTRIC CODE.
15. SWITCH TYPE: T= TIME SWITCH, M= MOTION DETECTOR, 3= 3-WAY.

DRAWING REFERENCED NOTES:

1. UNDERGROUND ELECTRICAL CONNECTIONS TO EAST WALL ELECTRICAL DEVICES SO THAT ROOF SECTION OVER WELL IS EASILY REMOVED.
2. UFER GROUND SHALL CONSIST OF 40FT OF #2/0 WIRE CENTERED IN BUILDING FOOTING, 2" ABOVE BOTTOM. BOND CONDUCTOR TO REINFORCING STEEL. PROTECT CONDUCTOR FROM DIRECT EARTH CONTACT WITH 3/4" (MIN) CONDUIT SLEEVE WHERE IT EXITS CONCRETE FOOTING AS REQUIRED.

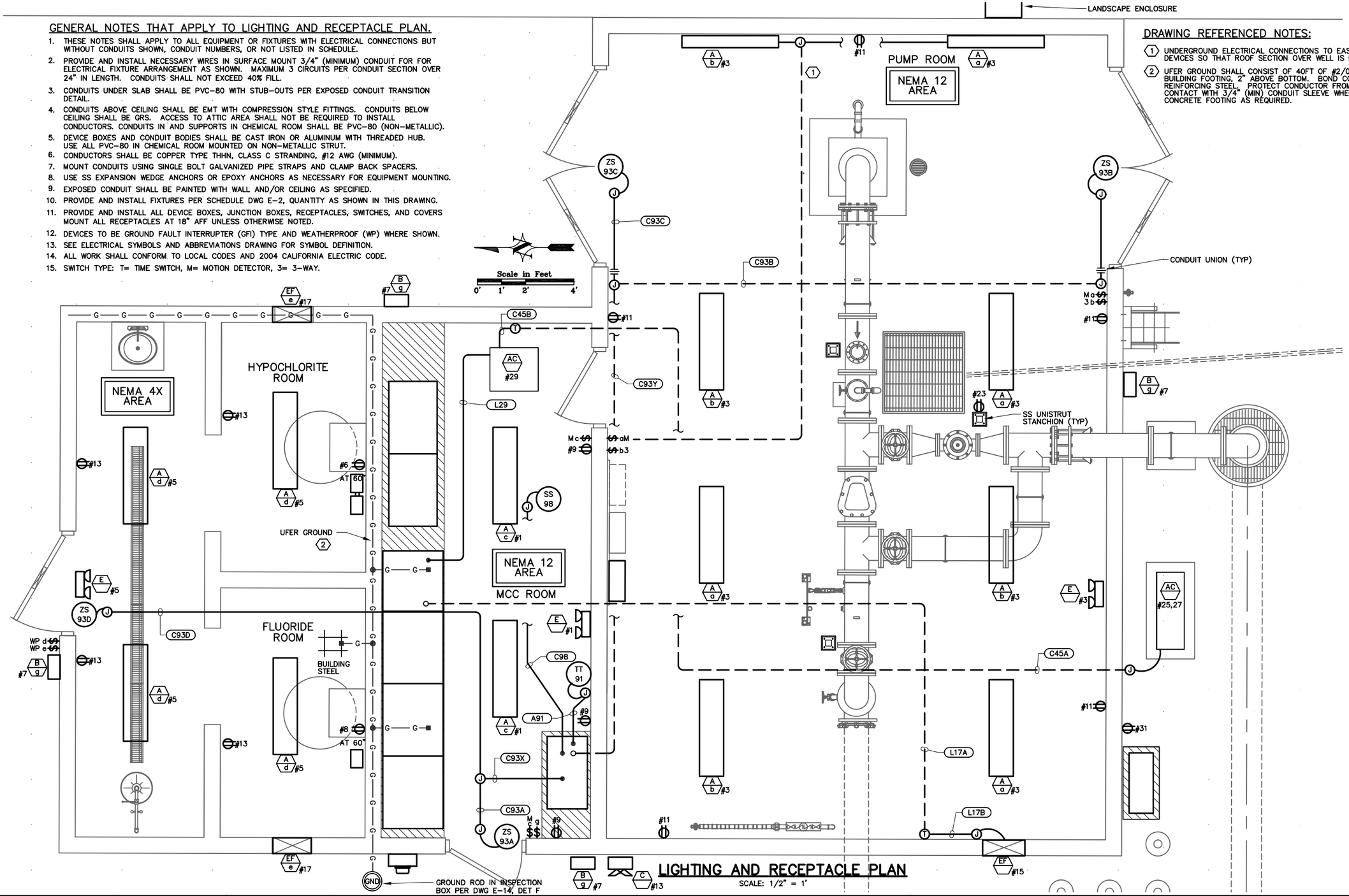

LIGHTING AND RECEPTACLE PLAN

SCALE: 1/2" = 1'

DATE: November 2008	LINE IS 2 INCHES AT FULL SIZE (IF NOT 2"-SCALE ACCORDINGLY)	REGISTERED PROFESSIONAL ENGINEER THOMAS P. FRISCH No. E15761 Exp. 09-30-10 ELECTRICAL STATE OF CALIFORNIA	LUHDORFF & SCALMANINI CONSULTING ENGINEERS FRISCH ENGINEERING, INC. CONSULTING ELECTRICAL ENGINEERS 110 BLUE RAVINE RD, SUITE 101 FOLSOM, CA 95630 PH 916 353 1025 FX 916 353 1028 FILE:0807b-E10.DWG DATE: Dec 01, 2008 TIME: 8:22:52AM	REVISIONS	SACRAMENTO SUBURBAN WATER DIST. *VERNER AVENUE WELL AND TREATMENT FACILITIES*	LIGHTING AND RECEPTACLE PLAN	SCALE AS SHOWN
	FILE DRAWN B. WOODIN DESIGNED T. FRISCH CHECKED T. FRISCH CHECKED			ZONE / REV. / DESCRIPTION / BY / DATE / APP.	SUBMITTED: DATE: SUBMITTAL APPROVED: DATE:		DRAWING NUMBER E-11 SHEET NUMBER 30 OF 52

CONDUIT & WIRE ROUTING SCHEDULE

REV	CONDUIT DETAILS TAG NO.	FROM	TO	QTY	SIZE	TYPE	POWER WIRE QTY	POWER WIRE SIZE	CONTROL WIRE QTY	CONTROL WIRE SIZE	GROUND SIZE	NOTES
	A04	CONTROL PANEL	MCC	1	1"	PVC-80	–	–	2	#16 TSPR	–	
	A05	CONTROL PANEL	MCC	1	1"	PVC-80	–	–	–	–	–	
	A07	CONTROL PANEL	PBX-1A	1	1"	PVC-80	–	–	–	–	–	
	A11	MCC	CONTROL VALVE	1	3/4"	PVC-80	–	–	–	–	–	STUB AND CAP
	A42	CONTROL PANEL	HYPOCHLORITE J-BOX	1	1"	PVC-80	–	–	2	#16 TSPR	–	
	A43	CONTROL PANEL	FLUORIDE J-BOX	1	1"	PVC-80	–	–	2	#16 TSPR	–	
	A51A	CONTROL PANEL	WELL LEVEL JB	1	3/4"	GRS-PVC	–	–	1	#16 TSPR	#12	
	A51B	WELL LEVEL JB	WELL LEVEL LT-51	1	3/4"	FLEX	–	–	1	MFG CABLE	–	
	A61	CONTROL PANEL	PRESSURE TRANSMITTER	1	3/4"	GRS-PVC	–	–	1	#16 TSPR	–	
	A71	CONTROL PANEL	FLOW METER	1	1"	GRS-PVC	–	–	1	#16 TSPR	–	
	A81	CONTROL PANEL	CHLORINE ANALYZER	1	3/4"	GRS-PVC	–	–	1	#16 TSPR	–	
	A82	CONTROL PANEL	FUTURE ANALYZER	1	3/4"	GRS-PVC	–	–	–	–	–	
	A83	CONTROL PANEL	FUTURE ANALYZER	1	3/4"	GRS-PVC	–	–	–	–	–	
	C00	MSB	REMOTE METER	1	1-1/2"	GRS	–	–	–	–	–	PER UTILITY REQUIREMENTS
	C03	MSB	GENERATOR CONNECTION PANEL	1	1"	PVC-80	–	–	8	#14	#12	STUB AND CAP
	C04	CONTROL PANEL	MCC	1	1"	PVC-80	–	–	20	#14	#12	STUB AND CAP
	C05	CONTROL PANEL	MCC	1	1"	PVC-80	–	–	–	–	–	
	C07	CONTROL PANEL	PBX-1A	1	1"	PVC-80	–	–	–	–	–	
	C10	MCC	WELL PUMP	1	1"	PVC-80	–	–	6	#14	#14	
	C11	MCC	CONTROL VALVE	1	3/4"	PVC-80	–	–	8	#14	#14	
	C31	GATE OPERATOR	GATE KEY	1	3/4"	PVC-80	–	–	6	#14	#14	
	C42	CONTROL PANEL	HYPOCHLORITE J-BOX	1	1"	PVC-80	–	–	6	#14	#14	
	C43	CONTROL PANEL	FLUORIDE J-BOX	1	1"	PVC-80	–	–	6	#14	#14	
	C45A	THERMOSTAT	AC COMPRESSOR	1	3/4"	PVC-80	–	–	6	#14	#14	
	C45B	THERMOSTAT	AC CONDENSOR	1	3/4"	GRS	–	–	6	#14	#14	
	C71	CONTROL PANEL	FLOWMETER	1	1"	PVC-80	–	–	6	#14	#14	
	C75	CONTROL PANEL	EYEWASH	1	3/4"	PVC-80	–	–	2	#14	#14	
	C81	CONTROL PANEL	CHLORINE ANALYZER	1	3/4"	PVC-80	–	–	4	#14	#14	
	C82	CONTROL PANEL	FUTURE ANALYZER	1	3/4"	PVC-80	–	–	–	–	–	STUB AND CAP
	C83	CONTROL PANEL	FUTURE ANALYZER	1	3/4"	PVC-80	–	–	–	–	–	STUB AND CAP
	C93A	J-BOX	ZS-93A J-BOX	1	3/4"	GRS	–	–	2	#14	#14	
	C93B	J-BOX	ZS-93B J-BOX	1	3/4"	GRS	–	–	2	#14	#14	
	C93C	J-BOX	ZS-93C J-BOX	1	3/4"	GRS	–	–	6	#14	#14	
	C93D	J-BOX	ZS-93D J-BOX	1	3/4"	GRS	–	–	2	#14	#14	
	C93X	CONTROL PANEL	J-BOX	1	3/4"	GRS	–	–	4	#14	#14	
	C93Y	CONTROL PANEL	J-BOX	1	3/4"	PVC-80	–	–	4	#14	#14	
	C98	MCC	SMOKE DETECTOR	1	3/4"	GRS	–	–	4	#14	#14	
	C99	CONTROL PANEL	MSB	1	1"	PVC-80	–	–	8	#14	#14	
	D01	TELEPHONE SERVICE	CONTROL PANEL	1	1"	PVC-80	–	–	1	TEL WIRE	#12	
	D02	TELEPHONE SERVICE	MSB	1	1"	PVC-80	–	–	1	TEL WIRE	#12	
	D03	CONTROL PANEL	ANTENNA	1	2"	PVC-80	–	–	1	ANTENNA CABLE	–	
	D04	CONTROL PANEL	MCC	1	3/4"	GRS-PVC	–	–	–	–	–	
	D05	CONTROL PANEL	MSB	1	3/4"	GRS-PVC	–	–	1	CAT 5E	–	
	D07	CONTROL PANEL	PBX-1A	1	1"	GRS-PVC	–	–	–	–	–	
	G01	GROUND ROD	ANTENNA POLE	1	3/4"	PVC-80	1	–	–	–	#2	
	P01A,B	UTILITY SERVICE	TRANSFORMER	2	4"	PVC-40	–	–	–	–	–	PER UTILITY REQUIREMENTS
	P02A,B,C,D	TRANSFORMER	MSB	4	5"	PVC-40	4	#500	–	–	–	1 CONDUIT EMPTY
	P03A,B	MSB	GENERATOR CONNECTION PANEL	2	4"	PVC-80	3	#500	–	–	#3/0	
	P03E,F,G	MSB	PBX-1B	3	4"	PVC-80	–	–	–	–	–	
	P04	MSB	PUMP CONTROL PANEL	1	4"	PVC-80	3	#500	–	–	#3/0	
	P05	MSB	PUMP CONTROL PANEL	1	4"	PVC-80	3	#500	–	–	#3/0	
	P07A,B,C	MSB	PBX-1B	3	4"	PVC-80	–	–	–	–	–	
	P10A	MCC	WELL TERM BOX	1	4"	PVC-80	3	#350	–	–	#2/0	
	P10B	WELL TERM BOX	WELL MOTOR	1	4"	GRS	1	MFG CABL	–	–	–	UNION FITTING IN CONDUIT
	L02	MSB	PLC CONTROL PANEL	1	1"	PVC-80	4	#12	–	–	#12	
	L06	MSB	HYPOCHLORITE JUNCTION BOX	1	1"	PVC-80	2	#12	–	–	#12	
	L08	MSB	FLUORIDE JUNCTION BOX	1	1"	PVC-80	2	#12	–	–	#12	
	L10	MSB	MCC	1	3/4"	PVC-80	2	#12	–	–	#12	
	L12	MSB	GENERATOR CONNECTION PANEL	1	1-1/2"	PVC-80	3	#8	2	#12	#10	
	L17A	MCC	THERMOSTAT	1	3/4"	PVC-80	2	#12	–	–	#12	
	L17B	THERMOSTAT	EXHAUST FAN	1	3/4"	PVC-80	2	#12	–	–	#12	
	L19	MCC	ANTENNA POLE	1	1"	PVC-80	–	–	–	–	–	
	L21	MSB	GATE OPERATOR	1	1"	PVC-80	2	#10	–	–	#12	
	L24	MSB	POLE LIGHTS	1	1"	PVC-80	2	#10	–	–	#12	MULTIPLE CONDUITS
	L25	MSB	AC COMPRESSOR	1	1"	PVC-80	2	#8	–	–	#12	#12 NEUTRAL
	L29	MSB	AC CONDENSOR	1	3/4"	GRS	2	#12	–	–	#12	
	L33	MSB	LANDSCAPE CONTROLLER	1	3/4"	PVC-80	2	#12	–	–	#12	
	X01	MSB	CONTROL PANEL	1	1"	PVC-80	–	–	–	–	–	PULL ROPE

CONDUIT SCHEDULE – CONTINUED

	X02	MSB	HYPOCHLORITE ROOM	1	1"	PVC-80	–	–	–	–	STUB AND CAP
	X03	MSB	FLUORIDE ROOM	1	1"	PVC-80	–	–	–	–	STUB AND CAP
	X04	CONTROL PANEL	HYPOCHLORITE J-BOX	1	1"	PVC-80	–	–	–	–	PULL ROPE
	X05	CONTROL PANEL	FLUORIDE J-BOX	1	1"	PVC-80	–	–	–	–	PULL ROPE
	X06	CONTROL PANEL	CHECK VALVE	1	3/4"	PVC-80	–	–	–	–	STUB AND CAP
	X07A,B,C	MSB	PBX-1A	3	2"	PVC-80	–	–	–	–	PULL ROPE
	X08A,B	CONTROL PANEL	PBX-1A	2	1"	PVC-80	–	–	–	–	PULL ROPE
	X09	CONTROL PANEL	GATE OPERATOR	1	1"	PVC-80	–	–	–	–	PULL ROPE
	X10	MSB	MCC	1	1"	PVC-80	–	–	–	–	PULL ROPE

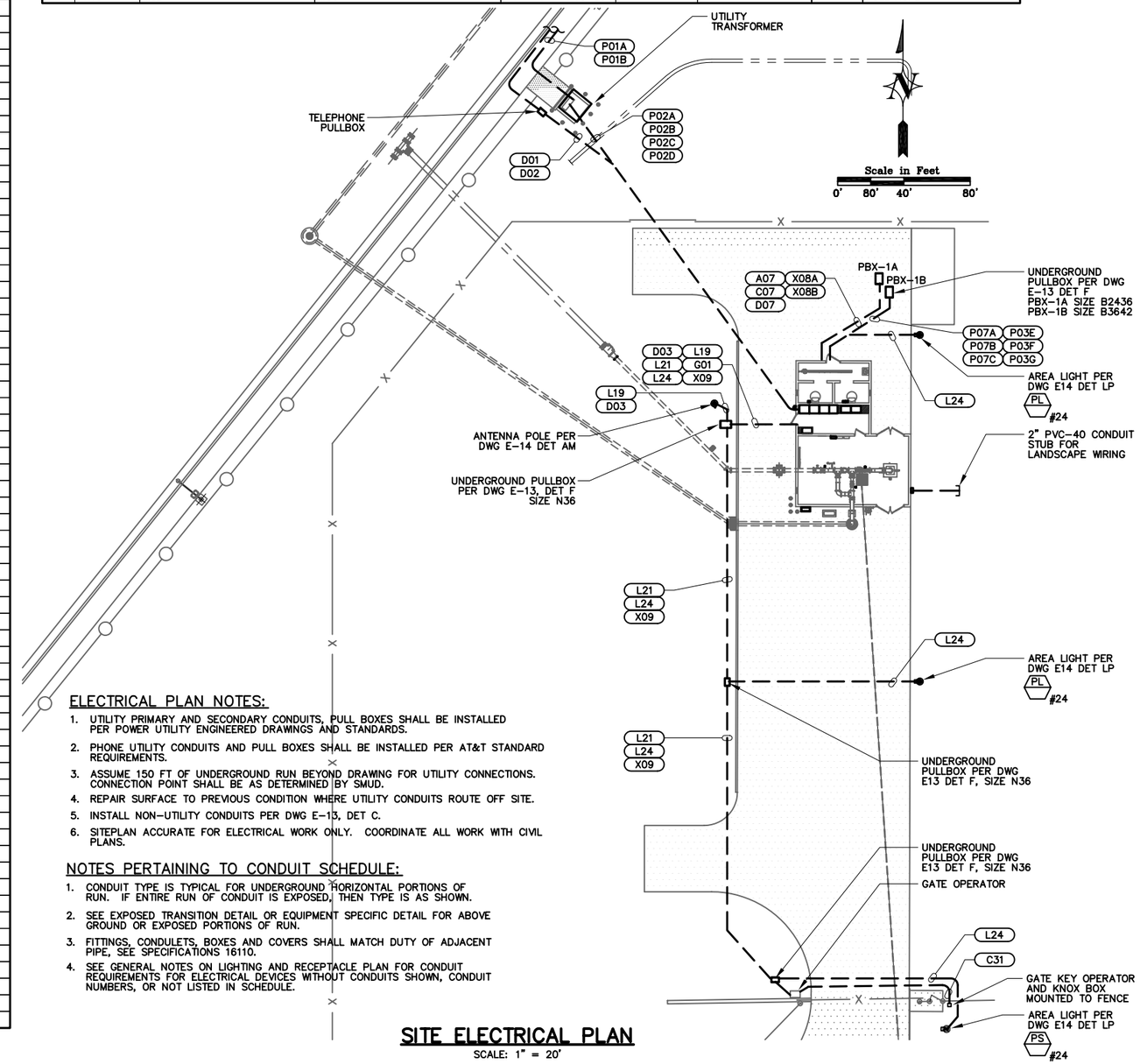

ELECTRICAL PLAN NOTES:

1. UTILITY PRIMARY AND SECONDARY CONDUITS, PULL BOXES SHALL BE INSTALLED PER POWER UTILITY ENGINEERED DRAWINGS AND STANDARDS.
2. PHONE UTILITY CONDUITS AND PULL BOXES SHALL BE INSTALLED PER AT&T STANDARD REQUIREMENTS.
3. ASSUME 150 FT OF UNDERGROUND RUN BEYOND DRAWING FOR UTILITY CONNECTIONS. CONNECTION POINT SHALL BE AS DETERMINED BY SMUD.
4. REPAIR SURFACE TO PREVIOUS CONDITION WHERE UTILITY CONDUITS ROUTE OFF SITE.
5. INSTALL NON-UTILITY CONDUITS PER DWG E-13, DET C.
6. SITEPLAN ACCURATE FOR ELECTRICAL WORK ONLY. COORDINATE ALL WORK WITH CIVIL PLANS.

NOTES PERTAINING TO CONDUIT SCHEDULE:

1. CONDUIT TYPE IS TYPICAL FOR UNDERGROUND HORIZONTAL PORTIONS OF RUN. IF ENTIRE RUN OF CONDUIT IS EXPOSED, THEN TYPE IS AS SHOWN.
2. SEE EXPOSED TRANSITION DETAIL OR EQUIPMENT SPECIFIC DETAIL FOR ABOVE GROUND OR EXPOSED PORTIONS OF RUN.
3. FITTINGS, CONDULETS, BOXES AND COVERS SHALL MATCH DUTY OF ADJACENT PIPE, SEE SPECIFICATIONS 16110.
4. SEE GENERAL NOTES ON LIGHTING AND RECEPTACLE PLAN FOR CONDUIT REQUIREMENTS FOR ELECTRICAL DEVICES WITHOUT CONDUITS SHOWN, CONDUIT NUMBERS, OR NOT LISTED IN SCHEDULE.

SITE ELECTRICAL PLAN

SCALE: 1" = 20'

DATE: November 2008

LINE IS 2 INCHES AT FULL SIZE (IF NOT 2"–SCALE ACCORDINGLY)

FILE
DRAWN B. WOODIN
DESIGNED T. FRISCH
CHECKED T. FRISCH
CHECKED

REGISTERED PROFESSIONAL ENGINEER THOMAS P. FRISCH No. E15761 Exp. 09-30-10 ELECTRICAL STATE OF CALIFORNIA

LUHDORFF & SCALMANINI CONSULTING ENGINEERS

FRISCH ENGINEERING, INC.
CONSULTING ELECTRICAL ENGINEERS
110 BLUE RAVINE RD, SUITE 101
FOLSOM, CA 95630
PH 916 353 1025
FX 916 353 1028

FILE:0807c-E10.DWG DATE: DEC 01, 2008 TIME: 8:23:07AM

REVISIONS

ZONE	REV.	DESCRIPTION	BY	DATE	APP.

SACRAMENTO SUBURBAN WATER DIST.
VERNER AVENUE
WELL AND TREATMENT FACILITIES

SUBMITTED: DATE:
SUBMITTAL APPROVED: DATE:

SITE ELECTRICAL PLAN

SCALE: AS SHOWN

DRAWING NUMBER: E-12

SHEET NUMBER: 31 OF 52

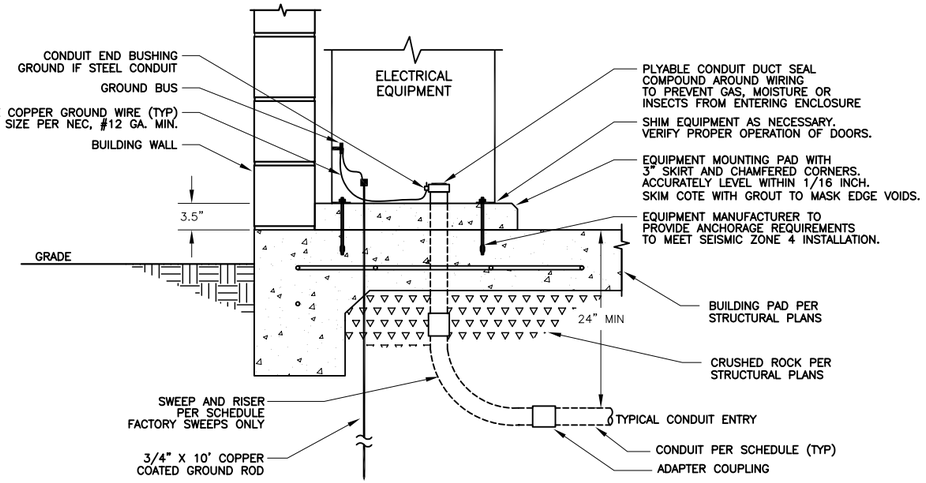

A — EQUIPMENT CONCRETE PAD DETAIL
NOT TO SCALE

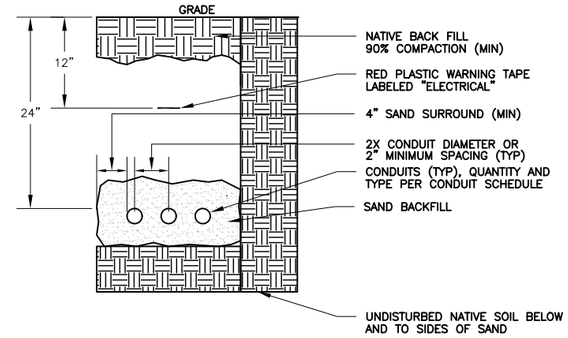

C — UNDERGROUND CONDUIT DETAIL
NOT TO SCALE

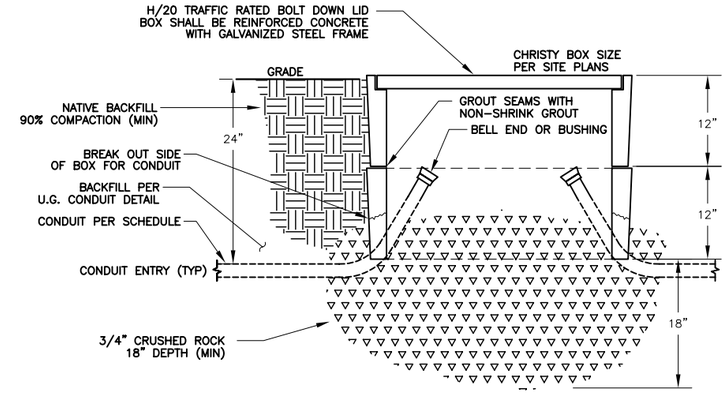

F — UNDERGROUND PULL BOX DETAIL
NOT TO SCALE

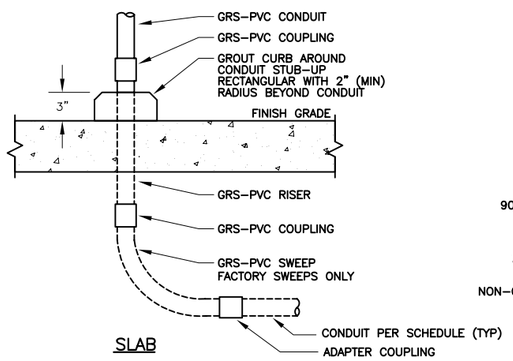

SLAB

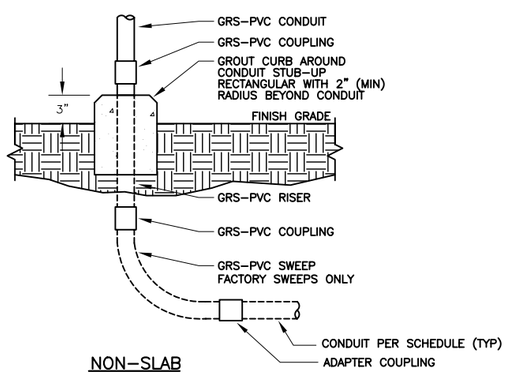

NON-SLAB

B — EXPOSED CONDUIT TRANSITION DETAIL
NOT TO SCALE

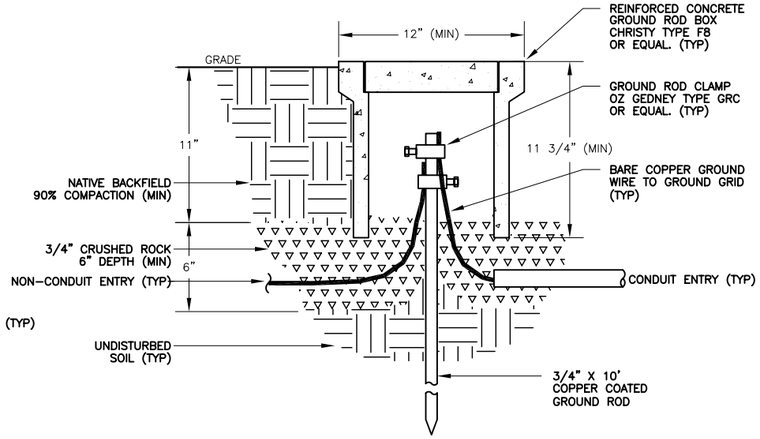

D — GROUND INSPECTION BOX DETAIL
NOT TO SCALE

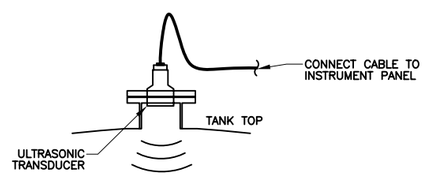

F — ULTRASONIC TRANSMITTER DETAIL
E13 NOT TO SCALE

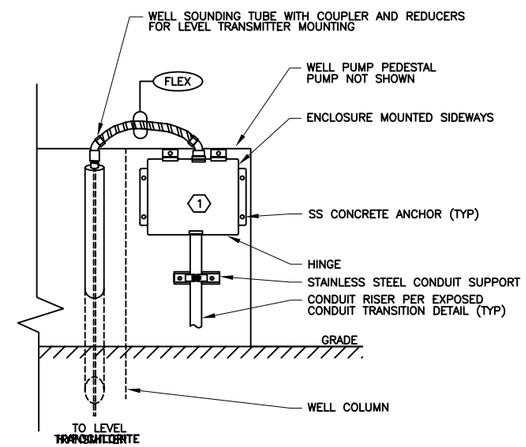

G — WELL LEVEL TRANSMITTER DETAIL
NOT TO SCALE

NOTES: (1) 12"H x 10"W x 6"D NEMA 4X STAINLESS STEEL ENCLOSURE WITH BACKPAN. MECHANICALLY FASTEN TRANSMITTER CABLE TO PANEL FOR STRESS RELIEF. ATTACH DESSICANT DRIER TO END OF SUBMERSIBLE PROBE CABLE. PROVIDE HOFFMAN CHNFSS OR APPROVED EQUAL.

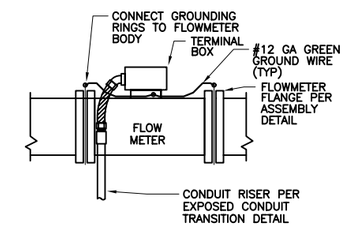

H — FLOWMETER DETAIL
NOT TO SCALE

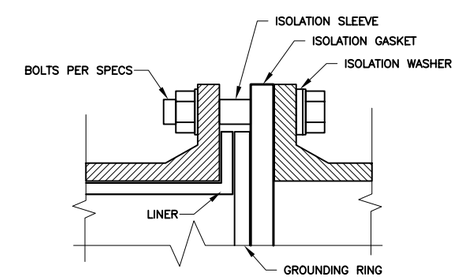

J — FLOWMETER FLANGE ASSEMBLY
NOT TO SCALE

DATE: November 2008

LINE IS 2 INCHES AT FULL SIZE (IF NOT 2"-SCALE ACCORDINGLY)

FILE
DRAWN B. WOODIN
DESIGNED T. FRISCH
CHECKED T. FRISCH
CHECKED

REGISTERED PROFESSIONAL ENGINEER THOMAS P. FRISCH No. E15761 Exp. 09-30-10 ELECTRICAL STATE OF CALIFORNIA

LUHDORFF & SCALMANINI CONSULTING ENGINEERS

FRISCH ENGINEERING, INC.
CONSULTING ELECTRICAL ENGINEERS
110 BLUE RAVINE RD, SUITE 101 PH 916 353 1025
FOLSOM, CA 95630 FX 916 353 1028

FILE:0807D-E13.DWG DATE: DEC 01, 2008 TIME: 8:23:15AM

REVISIONS

ZONE	REV.	DESCRIPTION	BY	DATE	APP.

SACRAMENTO SUBURBAN WATER DIST.
VERNER AVENUE
WELL AND TREATMENT FACILITIES

SUBMITTED: DATE:
SUBMITTAL APPROVED: DATE:

ELECTRICAL DETAILS #1

SCALE: AS SHOWN
DRAWING NUMBER: E-13
SHEET NUMBER: 32 OF 52

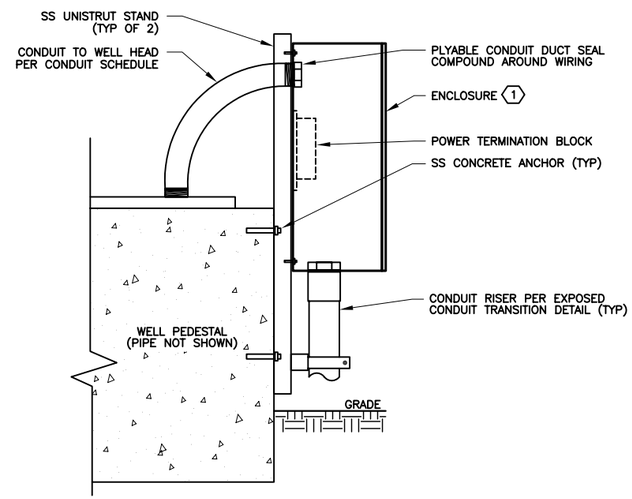

K — WELL ELECTRICAL TERMINATION DETAIL

NOT TO SCALE

NOTES: 1 30"H x 24"W x 12"D NEMA 4X STAINLESS STEEL ENCLOSURE WITH POWER TERMINATION BLOCK. MECHANICALLY FASTEN PUMP CABLE TO PANEL FOR STRESS RELIEF. PROVIDE HOFFMAN CONCEPT OR APPROVED EQUAL.

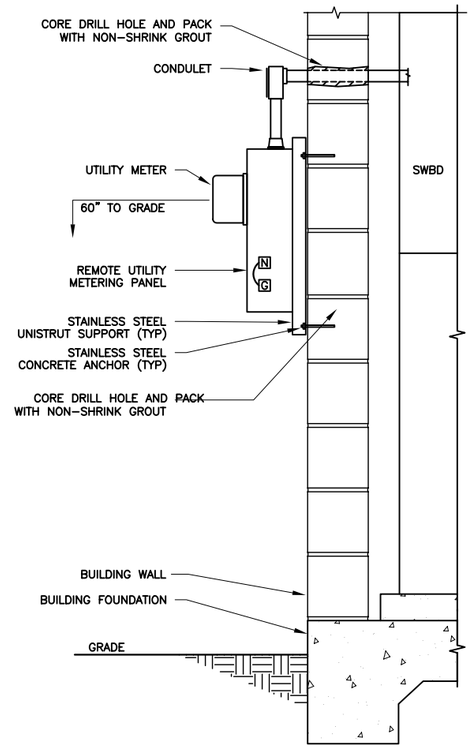

M — REMOTE METERING DETAIL

NOT TO SCALE

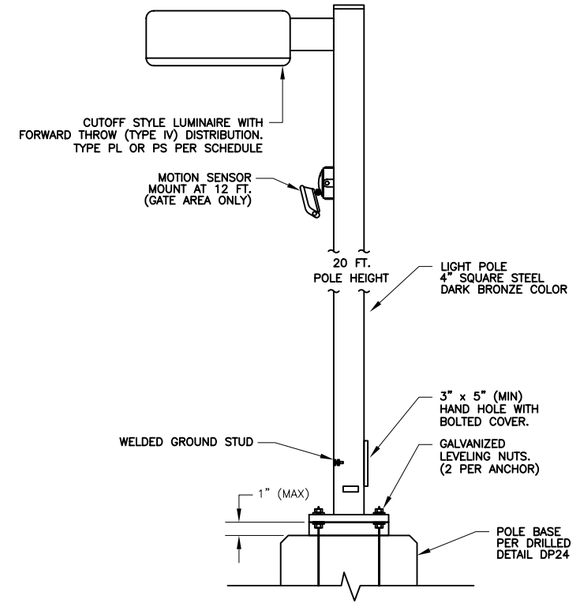

LP — LIGHT POLE DETAIL

NOT TO SCALE

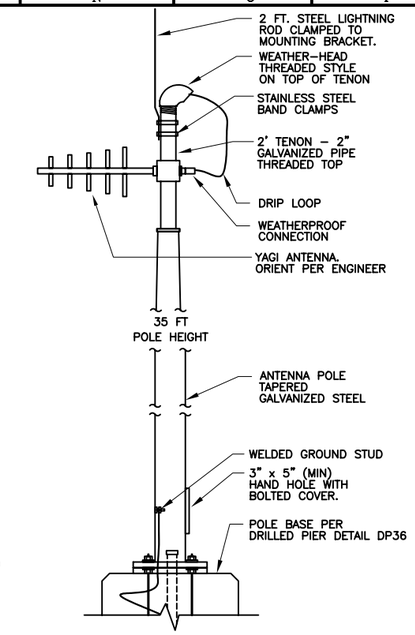

AM — ANTENNA MAST DETAIL

NOT TO SCALE

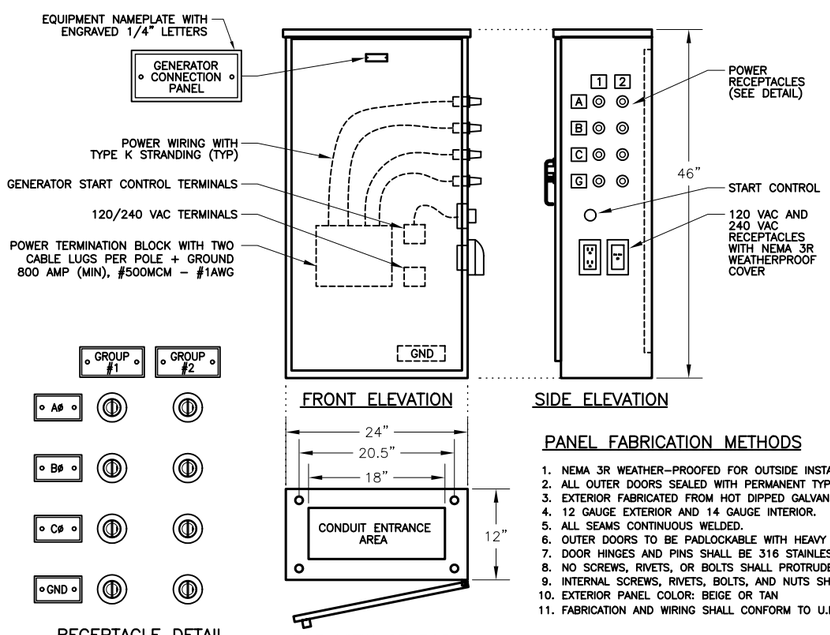

PANEL FABRICATION METHODS

1. NEMA 3R WEATHER-PROOFED FOR OUTSIDE INSTALLATION.
2. ALL OUTER DOORS SEALED WITH PERMANENT TYPE GASKETING.
3. EXTERIOR FABRICATED FROM HOT DIPPED GALVANIZED SHEET STEEL.
4. 12 GAUGE EXTERIOR AND 14 GAUGE INTERIOR.
5. ALL SEAMS CONTINUOUS WELDED.
6. OUTER DOORS TO BE PADLOCKABLE WITH HEAVY DUTY 3 POINT LATCHES.
7. DOOR HINGES AND PINS SHALL BE 316 STAINLESS STEEL.
8. NO SCREWS, RIVETS, OR BOLTS SHALL PROTRUDE EXTERNALLY.
9. INTERNAL SCREWS, RIVETS, BOLTS, AND NUTS SHALL BE STAINLESS STEEL.
10. EXTERIOR PANEL COLOR: BEIGE OR TAN
11. FABRICATION AND WIRING SHALL CONFORM TO U.L. AND NEMA STANDARDS.

Q — GENERATOR CONNECTION PANEL

NOT TO SCALE

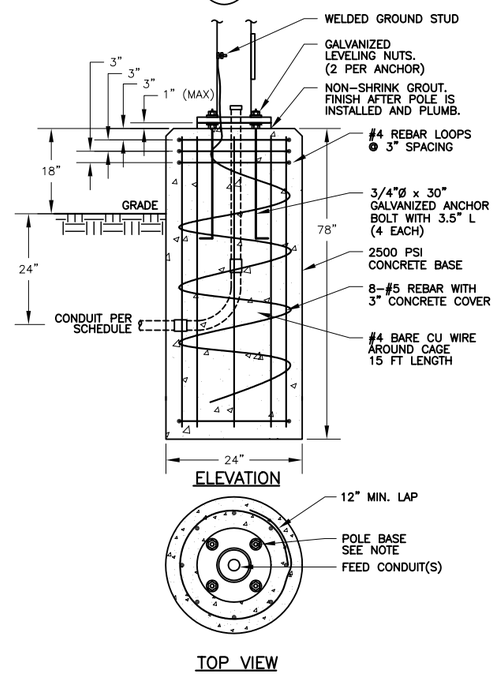

DP24 — POLE DRILLED PIER DETAIL 24

NOT TO SCALE

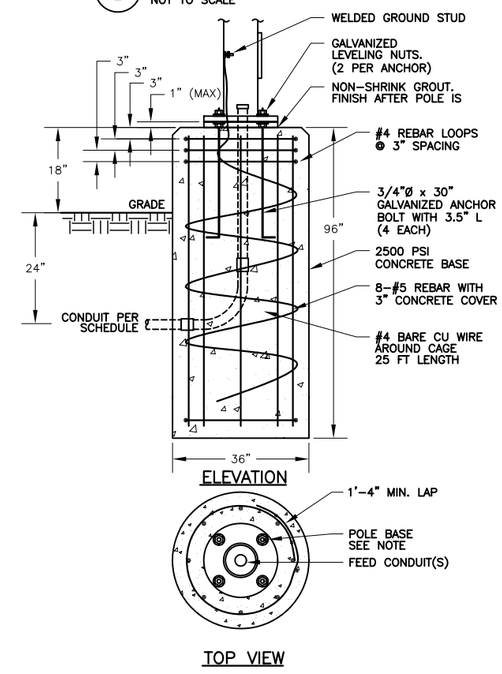

DP36 — POLE DRILLED PIER DETAIL 36

NOT TO SCALE

DATE: November 2008

LINE IS 2 INCHES AT FULL SIZE (IF NOT 2"-SCALE ACCORDINGLY)

FILE
DRAWN B. WOODIN
DESIGNED T. FRISCH
CHECKED T. FRISCH
CHECKED

REGISTERED PROFESSIONAL ENGINEER — THOMAS P. FRISCH — No. E15761 — Exp. 09-30-10 — ELECTRICAL — STATE OF CALIFORNIA

LUHDORFF & SCALMANINI CONSULTING ENGINEERS

FRISCH ENGINEERING, INC.
CONSULTING ELECTRICAL ENGINEERS
110 BLUE RAVINE RD, SUITE 101 — PH 916 353 1025
FOLSOM, CA 95630 — FX 916 353 1028

FILE:0807D-E14.DWG DATE: DEC 01, 2008 TIME: 8:23:29AM

REVISIONS

ZONE	REV.	DESCRIPTION	BY	DATE	APP.

SACRAMENTO SUBURBAN WATER DIST.
VERNER AVENUE
WELL AND TREATMENT FACILITIES

SUBMITTED: _____ DATE: _____
SUBMITTAL APPROVED: _____ DATE: _____

ELECTRICAL DETAILS #2

SCALE: AS SHOWN

DRAWING NUMBER: E-14

SHEET NUMBER: 33 OF 52

GENERAL LANDSCAPE REQUIREMENTS/NOTES

1. NO PLANTING SHALL BE STARTED UNTIL SPRINKLER IRRIGATION SYSTEM HAS BEEN TESTED BY CONTRACTOR IN PRESENCE OF OWNER'S REPRESENTATIVE AND NOTED DEFICIENCIES CORRECTED.
2. NO PLANTING SHALL BE STARTED UNTIL SOIL PREPARATION AND FINISH GRADING OPERATIONS HAVE BEEN COMPLETED AND APPROVED BY THE OWNER'S REPRESENTATIVE.
3. QUANTITIES SHOWN ON PLANT MATERIAL LIST ARE APPROXIMATE. PROVIDE QUANTITIES INDICATED ON LANDSCAPE PLAN.
4. PLANT MATERIAL IS SUBJECT TO APPROVAL OF OWNER'S REPRESENTATIVE
5. SEE SHEET L3 FOR PLANTING INSTALLATION DETAILS.

ENVIRONMENTAL REQUIREMENTS:

GENERAL: PROCEED WITH WORK IN ORDERLY AND TIMELY MANNER TO COMPLETE INSTALLATION OF LANDSCAPING WITHIN CONTRACT LIMITS.

PROTECTION:

EXISTING CONSTRUCTION: EXECUTE WORK IN AN ORDERLY AND CAREFUL MANNER TO PROTECT NEW CONCRETE WALKS, WORK OF OTHER TRADES, AND OTHER IMPROVEMENTS.

EXISTING UTILITIES: DETERMINE LOCATION OF UNDERGROUND UTILITIES AND PERFORM WORK IN A MANNER WHICH WILL AVOID POSSIBLE DAMAGE. HAND EXCAVATE, AS REQUIRED, TO MINIMIZE POSSIBILITY OF DAMAGE TO UNDERGROUND UTILITIES. MAINTAIN GRADE STAKES SET BY OTHERS UNTIL REMOVAL IS MUTUALLY AGREED UPON BY ALL PARTIES CONCERNED. BE RESPONSIBLE FOR PROTECTION OF EXISTING UTILITIES WITHIN CONSTRUCTION AREA; REPAIR DAMAGE TO UTILITIES THAT OCCUR AS A RESULT OF OPERATIONS OF THIS WORK.

LANDSCAPING: PROTECT LANDSCAPE WORK AND MATERIALS FROM DAMAGE DUE TO LANDSCAPE OPERATIONS, OPERATIONS BY OTHER CONTRACTORS AND TRADES AND TRESPASSERS. MAINTAIN PROTECTION DURING INSTALLATION AND MAINTENANCE PERIODS. TREAT, REPAIR OR REPLACE DAMAGED LANDSCAPE WORK AS DIRECTED AT NO ADDITIONAL COST TO CONTRACT.

ADVERSE CONDITIONS: WHEN CONDITIONS DETRIMENTAL TO SOD OR PLANT GROWTH ARE ENCOUNTERED, SUCH AS RUBBLE FILL, ADVERSE DRAINAGE CONDITIONS, OR OBSTRUCTIONS, NOTIFY OWNER'S REPRESENTATIVE BEFORE STARTING WORK.

PLANTING AND TURF INSTALLATION SEASONS AND CONDITIONS

NO WORK SHALL BE DONE WHEN GROUND IS FROZEN, SNOW COVERED, TOO WET OR IN AN OTHERWISE UNSUITABLE CONDITION FOR AMENDING SOIL, FINISH GRADING OR PLANTING.

SOIL TESTING:

A. COORDINATE SOIL TESTING IN AN EXPEDITIOUS AND TIMELY MANNER AS REQUIRED FOR ON-SITE MATERIALS. RESPONSIBILITY OF CONTRACTING WITH A SOIL LABORATORY SHALL BE BORNE BY CONTRACTOR. COST OF SAMPLING AND TESTING SHALL BE INCLUDED IN CONTRACT PRICE. SIX (6) SAMPLES ARE REQUIRED. CONTRACTOR TO COLLECT SAMPLES IN THE PRESENCE OF OWNER'S REPRESENTATIVE. SAMPLES LOCATIONS TO BE IDENTIFIED ON PLAN.

B. EACH SAMPLE SHALL BE SUBMITTED TO A LABORATORY. THE LABORATORY MUST BE APPROVED BY THE OWNER SUBMIT SAMPLE SIZES AS REQUIRED BY LABORATORY.

C. AS A MINIMUM, SOIL SAMPLES SHALL BE ANALYZED FOR: PH, SALINITY, AMMONIA, PHOSPHATE, POTASSIUM, CALCIUM, MAGNESIUM, BORON, AND SODIUM LEVELS. LABORATORY TO PROVIDE APPRAISAL OF CHEMICAL PROPERTIES, INCLUDING PARTICLE SIZE AND RECOMMENDATIONS FOR TYPES AND QUANTITIES OF AMENDMENTS AND FERTILIZERS. CONTRACTOR TO ADVISE TESTING LAB THAT THE FOLLOWING AMENDMENTS ARE TO BE INCLUDED IN RECOMMENDATIONS:
GRO-POWER PLUS (MINIMUM RATE OF 150 LBS/1000 SQ.FT.) AND 90% BARK BASE PRODUCT, 1/4 INCH SIZE, TREATED WITH NITROGEN, 1/2-0-0. (MINIMUM RATE OF 3 CY PER 1000 SF.)

SOIL PERCOLATION

EXCAVATE 10 PLANTING PITS IN RANDOM AREAS OF SITE. FILL EXCAVATED PLANTING PITS WITH WATER TO 1/2 DEPTH OF PIT. PITS SHOULD DRAIN WITH IN 4 HOURS. IF PLANTING PITS DO NOT DRAIN, NOTIFY INSPECTOR IMMEDIATELY. PLANTING SHALL NOT BE STARTED UNTIL ARCHITECT HAS RESOLVED A METHOD TO REMEDY DRAINAGE ISSUE.

PLANT MATERIAL STANDARDS

PLANTS SHALL BE IN ACCORDANCE WITH AMERICAN NATIONAL STANDARDS INSTITUTE (ANSI) ANSI S60.1- AMERICAN STANDARD FOR NURSERY STOCK. EXCEPT AS OTHERWISE STATED IN SPECIFICATIONS OR SHOWN ON DRAWINGS. WHERE DRAWINGS OR SPECIFICATIONS ARE IN CONFLICT WITH ANSI S60.1, DRAWINGS AND SPECIFICATIONS SHALL PREVAIL. PRUNE, THIN OUT AND SHAPE TREES IN ACCORDANCE WITH ANSI STANDARD HORTICULTURAL PRACTICE. PRUNE TREES TO RETAIN REQUIRED HEIGHT AND SPREAD. UNLESS OTHERWISE DIRECTED BY LANDSCAPE ARCHITECT, DO NOT CUT TREE LEADERS, AND REMOVE ONLY INJURED OR DEAD BRANCHES FROM FLOWERING TREES.

KEY | LANDSCAPE LEGEND

SEQUOIA SEMPERVIRENS ... REDWOOD
24" BOX ... 12

SHRUBS

5 - DIE. — PLANT QUANTITY
PLANT KEY

(E) TREE TO REMAIN

PLANT MATERIAL LIST

SIZE	QUANTITY	KEY	BOTANICAL NAME .. COMMON NAME
			SHRUBS:
5 G.C.	12	CEA.	CEANOTHUS 'YANKEE POINT' ... CEANOTHUS
1 G.C.	10	DIE.	DIETES VEGETA ... FORTNIGHT LILY
1 G.C.	8	JUN.	JUNIPERUS SABINA 'BLUE DANUBE' ... JUNIPER
1 G.C.	26	MAH.R.	MAHONIA REPENS ... CREEPING MAHONIA
5 G.C.	25	RHA.	RHAMNUS CALIFORNICA 'MOUND SAN BRUNO' ... COFFEEBERRY

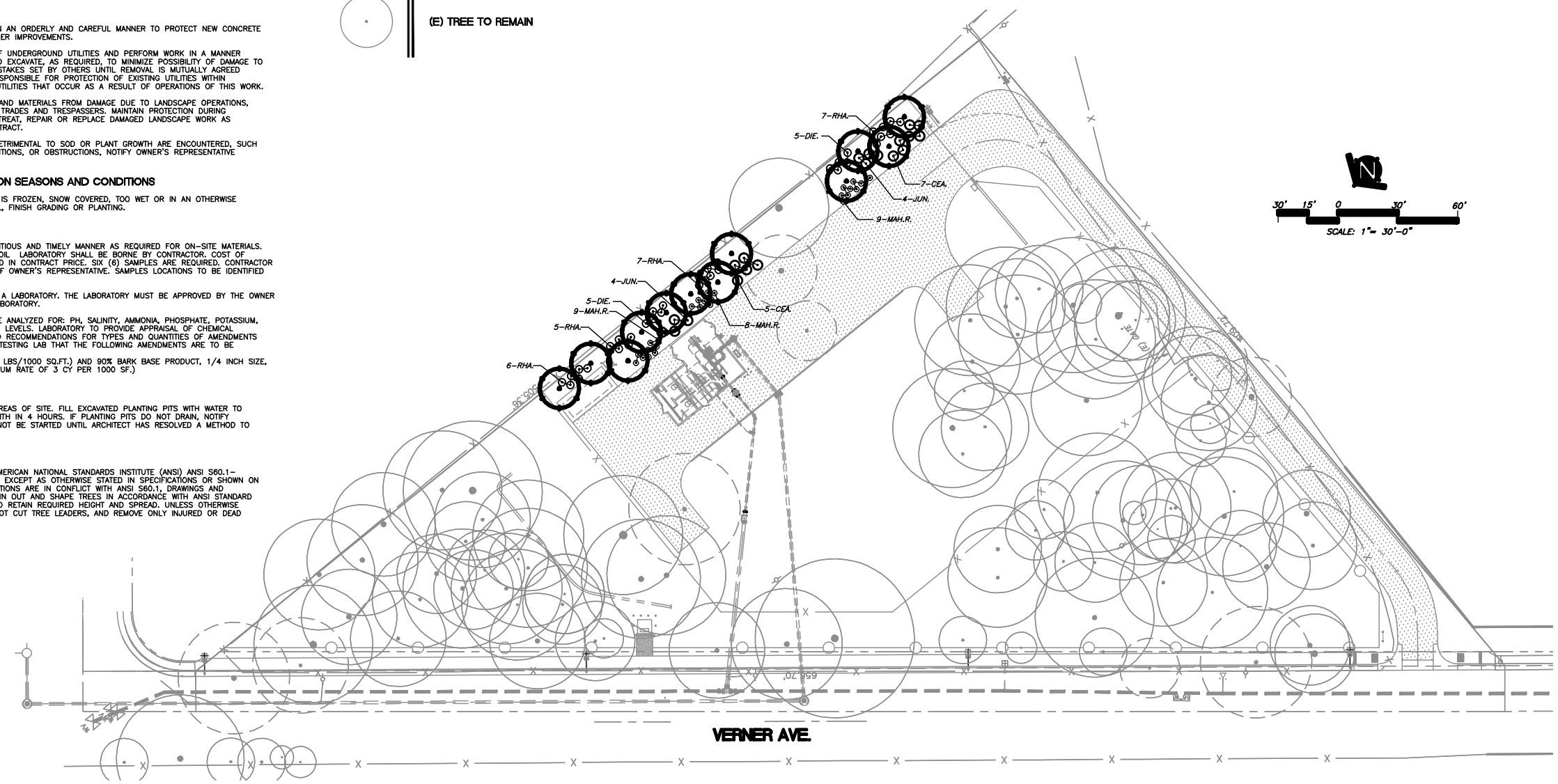

LICENSED LANDSCAPE ARCHITECT
SAB TAKEHARA
3871
Sab Takehara
11/25/08
DATE
2/28/09
RENEWAL DATE
STATE OF CALIFORNIA

Sab Takehara C-3871

09-48

MTWgroup

LINE IS 2 INCHES AT FULL SIZE (IF NOT 2"-SCALE ACCORDINGLY)

FILE L1.dwg
DRAWN BW
DESIGNED BW
CHECKED ST
CHECKED

THIS DRAWING IS NOT VALID FOR CONSTRUCTION PURPOSES UNLESS IT BEARS THE SEAL AND SIGNATURE OF A DULY REGISTERED PROFESSIONAL

LUHDORFF & SCALMANINI CONSULTING ENGINEERS

REVISIONS

ZONE	REV.	DESCRIPTION	BY	DATE	APP.

SACRAMENTO SUBURBAN WATER DIST.
VERNER AVENUE
WELL AND TREATMENT FACILITIES

SUBMITTED: _____ DATE: _____
SUBMITTAL APPROVED: _____ DATE: _____

TREE AND SHRUB LAYOUT PLAN AND NOTES

SCALE 1"=30'
DRAWING NUMBER L1
SHEET NUMBER 34 OF 52

KEY / SPRINKLER IRRIGATION LEGEND

AUTOMATIC CONTROLLER:
IRRITROL MC-E4 SERIES. WALL MOUNT.
4 STATIONS
COORDINATE 110V SERVICE AND POWER CONNECTION WITH ELECTRICAL SUB-CONTRACTOR.

POINT OF CONNECTION:
THIS SPRINKLER IRRIGATION SYSTEM IS DESIGNED TO OPERATE WITH A MAXIMUM FLOW OF 12 GPM.

CONTRACTOR SHALL LOCATE (E) IRRIGATION BACKFLOW.
CONNECT AT THIS POINT AND EXTEND AS INDICATED ON DRAWINGS.

GATE VALVE:
NIBCO NO F-619 WITH A NON-RISING STEM AND A 2" OPERATING NUT, IN VALVE BOX WITH TOP SET FLUSH TO FINISH GRADE. GATE VALVE TO BE LINE SIZE.

PRESSURE MAIN LINE:
TYPE:
ASTM D1785, PVC SCH 40.
TRENCH DEPTH:
IN PLANTED AREAS: 18" MINIMUM COVER.
UNDER PAVED AREAS: 24" MINIMUM COVER.
PVC SCHEDULE 40 SLEEVES ARE REQUIRED FOR ALL PIPING UNDER PAVEMENT.

LATERAL LINE:
TYPE:
PVC CLASS 200, SOLVENT WELD ALL UNSIZED PIPE SHALL BE 3/4" SIZE.
TRENCH DEPTH:
IN PLANTED AREAS:
BUBBLER HEADS: – 12" MINIMUM COVER.
UNDER PAVED AREAS: 24" MINIMUM COVER.
PVC SCHEDULE 40 SLEEVES ARE REQUIRED FOR ALL PIPING UNDER PAVEMENT.

AUTOMATIC CONTROL VALVE:
RAINBIRD PEB-PRS-D SERIES.
VALVE SHALL HAVE PRESSURE REGULATION OPTION.

QUICK COUPLER VALVE:
RAINBIRD 44NP.
VALVES SHALL HAVE LOCKING RUBBER COVERS, INSTALLED IN VALVE BOXES. TOP OF VALVE BOX SHALL HAVE BOLT DOWN LID AND TOP SET LEVEL TO FINISH GRADE.

TREE BUBBLER HEADS:
RAINBIRD: 1402 NOZZLES. TWO BUBBLERS PER TREE.

AUTOMATIC DRIP IRRIGATION VALVE/FILTER/PRESSURE REGULATOR:
RAINBIRD CONTROL ZONE KIT MODEL XCZ-075-PRF.

DRIP LATERAL WITH FLUSH PLUG:
PVC CLASS 200, SOLVENT WELD. ALL UNSIZED PIPE TO BE 3/4" SIZE. SEE DETAILS FOR EMITTER INSTALLATION. 1/4" DISTRIBUTION TUBING NOT SHOWN. NO MORE THAN TWO MULTIPLE OUTLET EMITTERS PER VALVE BOX. TRENCH DEPTH TO BE 12" MINIMUM COVER. PVC SCHEDULE 40 SLEEVES ARE REQUIRED FOR ALL PIPING UNDER PAVEMENT. MULTIPLE OUTLET EMITTER TO BE RAINBIRD MULTI-OUTLET XERI-BUG (XBT-10-6) WITH 1 GPH EMITTERS. 1/4" DISTRIBUTION TUBING TO BE BURIED A MINIMUM DEPTH OF 3" BELOW GRADE.

(E) REDUCED PRESSURE BACKFLOW PREVENTION DEVICE:
VERIFY EXACT LOCATION AND SIZE ON SITE

2 / 1" / 12.0 — INDICATES CONTROL VALVE AND STATION NUMBER
1 / 3/4" / 1.5 — INDICATES CONTROL VALVE SIZE
INDICATES GALLONS PER MINUTE

SPRINKLER IRRIGATION NOTES

1. DETERMINE LOCATION OF UNDERGROUND UTILITIES. DAMAGE CAUSED BY INSTALLATION OF THIS WORK SHALL BE REPAIRED TO SATISFACTION OF GOVERNING AGENCY OR OWNER AT NO ADDITIONAL COST TO THE CONTRACT.
2. ALL LOCAL CODES AND ORDINANCES SHALL BE COMPLIED WITH. IF THERE IS A CONFLICT, NOTIFY OWNER'S REPRESENTATIVE IMMEDIATELY.
3. TESTING:
   A. PRESSURE TEST ALL UNDERGROUND PIPING AS FOLLOWS:
      MAIN LINE – AT STATIC PSI FOR 4 HOURS.
      LATERAL LINES – AT STATIC PSI FOR 2 HOURS.
   B. COVERAGE TEST:
      NOTE: PRIOR TO REQUESTING COVERAGE TEST, INSURE ALL HEADS ARE SET PLUMB, NOZZLES ARE ADJUSTED PROPERLY AND SYSTEM HAS BEEN CHECKED FOR AUTOMATION.
      REQUEST OWNER'S REPRESENTATIVES PRESENCE ON-SITE WHEN SPRINKLER SYSTEM IS COMPLETELY INSTALLED AND FULLY AUTOMATIC. PROVIDE ADEQUATE PERSONNEL AT THIS MEETING TO ADJUST AND FINE TUNE SYSTEM TO SATISFACTION OF OWNER'S REPRESENTATIVE.
4. LAYOUT ALL WORK PRIOR TO TRENCHING OPERATIONS TO DETERMINE IF MINOR MODIFICATIONS OR ADJUSTMENTS WILL BE REQUIRED.
5. CONTROL WIRE SHALL BE UF-14, COLOR FOR LEAD AND WHITE FOR COMMON. SPLICES SHALL BE PERMITTED AT VALVE BOX LOCATIONS ONLY.
6. PROVIDE AND INSTALL AUTOMATIC CONTROLLER AND UF-14 CONTROL WIRE. ELECTRICAL SUBCONTRACTOR SHALL PROVIDE 110V SERVICE AND SERVICE HOOKUP FROM POWER SOURCE TO AUTOMATIC CONTROLLER.
7. COORDINATE ALL WORK WITH OTHER TRADES SO PROGRESS OF WORK IS NOT INTERRUPTED AND CAN BE COMPLETED IN A TIMELY MANNER.
8. NO PLANTING SHALL BE STARTED UNTIL ALL SPRINKLER WORK HAS BEEN TESTED BY CONTRACTOR IN PRESENCE OF OWNER'S REPRESENTATIVE AND APPROVED.
9. FOR SPRINKLER IRRIGATION INSTALLATION DETAILS, SEE SHEET NO. L3.

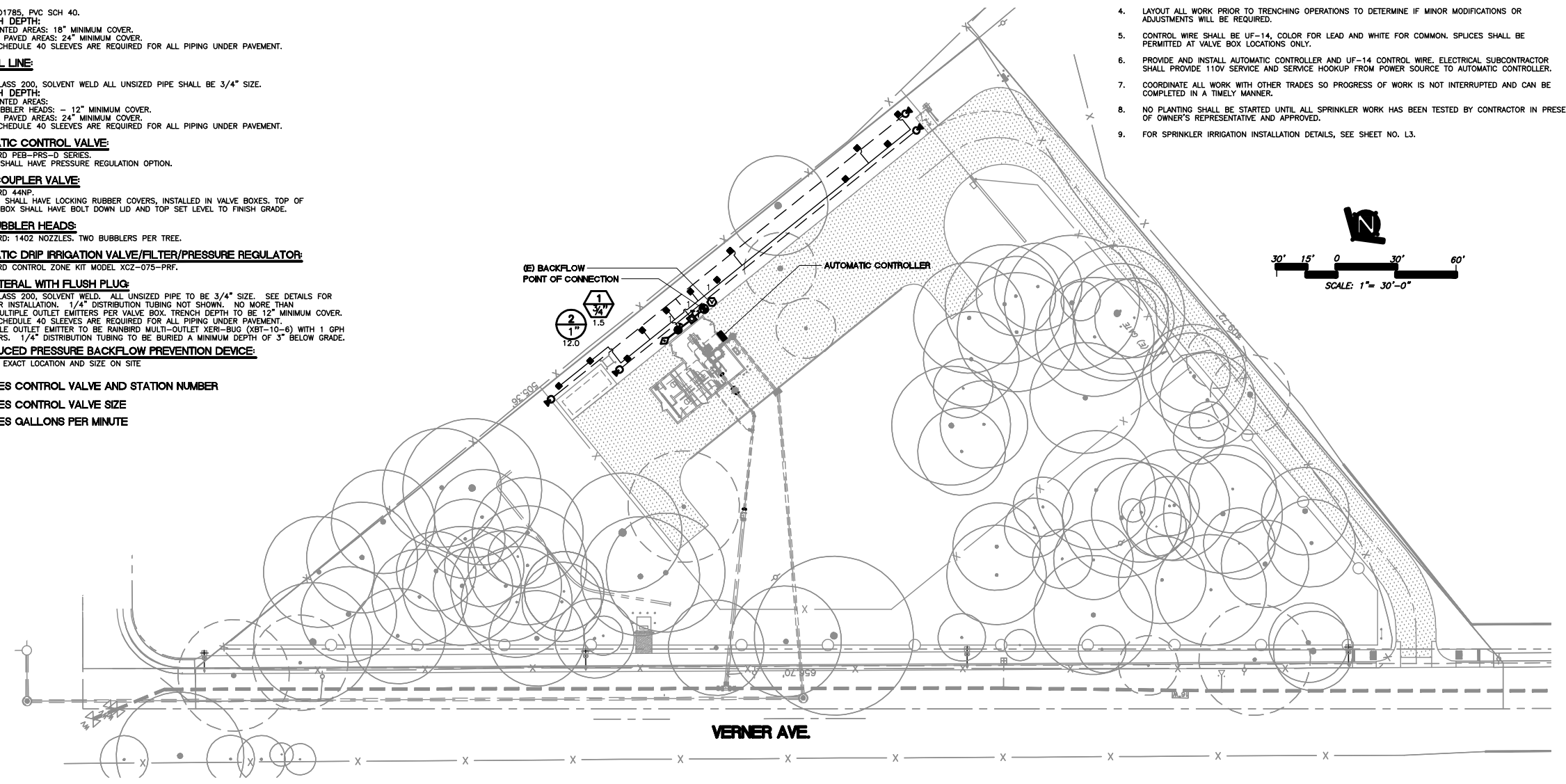

LICENSED LANDSCAPE ARCHITECT
No. TAKEHARA 3871
Sab Takehara
SIGNATURE
11/20/08
DATE
2/20/09
RENEW DATE
STATE OF CALIFORNIA

Sab Takehara C-3871

08-48

MTWgroup

LINE IS 2 INCHES AT FULL SIZE (IF NOT 2"-SCALE ACCORDINGLY)

FILE
DRAWN BW
DESIGNED BW
CHECKED ST
CHECKED

THIS DRAWING IS NOT VALID FOR CONSTRUCTION PURPOSES UNLESS IT BEARS THE SEAL AND SIGNATURE OF A DULY REGISTERED PROFESSIONAL

LUHDORFF & SCALMANINI CONSULTING ENGINEERS

REVISIONS

ZONE	REV.	DESCRIPTION	BY	DATE	APP.

SACRAMENTO SUBURBAN WATER DIST.
VERNER AVENUE
WELL AND TREATMENT FACILITIES

SUBMITTED: _____ DATE: _____
SUBMITTAL APPROVED: _____ DATE: _____

SPRINKLER IRRIGATION PLAN AND NOTES

SCALE 1"=30'
DRAWING NUMBER L2
SHEET NUMBER 35 OF 52

NOTES:
1. VITAMIN B-1: SUPERTHRIVE, LIQUINOX START OR EQUAL. APPLY AS PER MANUFACTURER'S INSTRUCTIONS WITH THE SECOND WATERING OF THE BASIN.
2. INSTALL ARBORGUARD TREE PROTECTION WHEN TREES ARE IN LAWN AREAS.

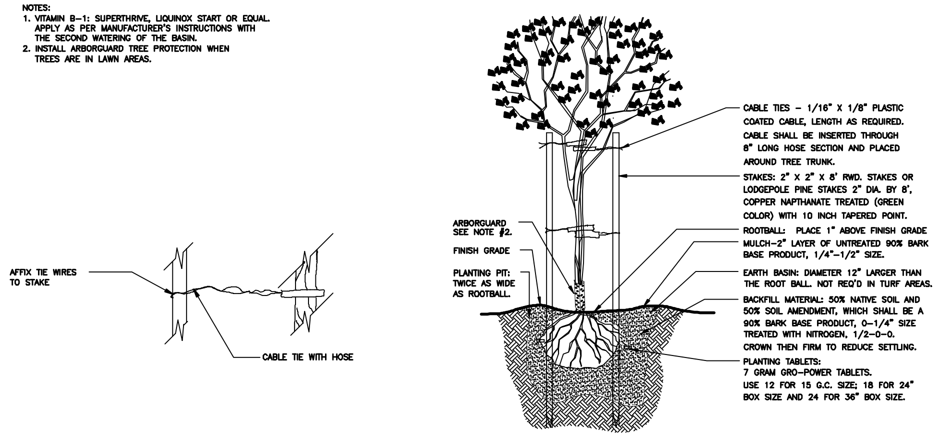

1 TREE PLANTING AND STAKING DETAIL

NOTE: VITAMIN B-1 SUPERTHRIVE LIQUINOX OR EQUAL. APPLY AS PER MANUFACTUER'S INSTRUCTIONS WITH SECOND WATERING OF THE BASIN.

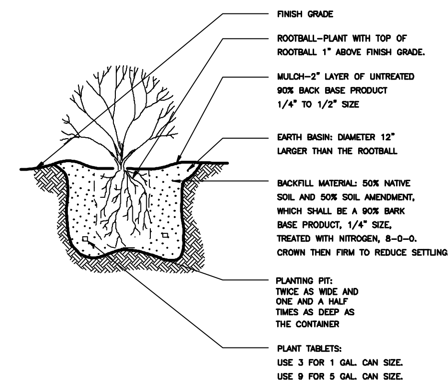

2 SHRUB PLANTING DETAIL

NOTE:
1. "S" INDICATES SPACING SHOWN ON PLAN

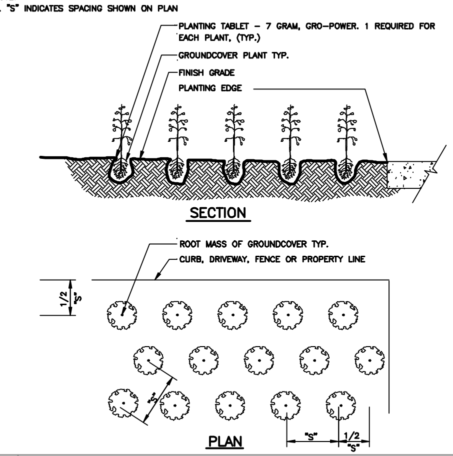

3 GROUNDCOVER/ANNUAL PLANTING DETAIL

NOTES:
1. ON SLOPE AREAS, LOCATE END OF DISTRIBUTION TUBING ON HIGH SIDE.
2. LENGTH OF DISTRIBUTION TUBING SHALL NOT EXCEED 10'.
3. NDS 7" ROUND VALVE BOX WITH GREEN COVER MODEL NO. 107BC

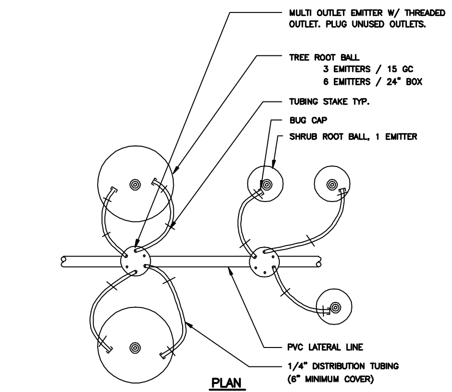

4 DRIP EMITTER LAYOUT DETAIL

NOTES:
1. SET VALVE BOX LEVEL WITH FINISH GRADE.
2. INSTALL VALVE BOX EXTENSIONS AS REQUIRED.
3. CONNECT ALL WIRES WITH WEATHER TIGHT CONNECTORS. SPLICES IN WIRE SHALL BE PERMITTED ONLY AT VALVE LOCATIONS.
4. TAPE AND BUNDLE WIRE EVERY 10 FEET
5. PROVIDE 18" EXPANSION LOOP AT EACH WIRE CONNECTION IN VALVE BOX

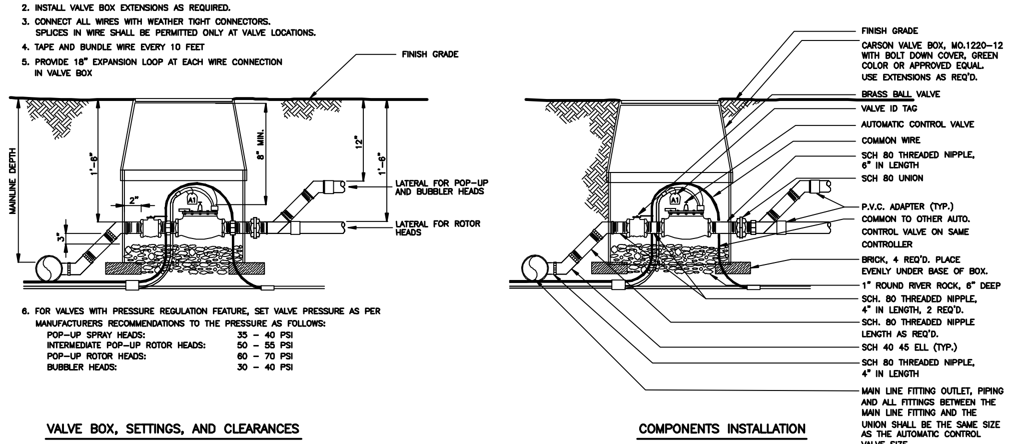

6. FOR VALVES WITH PRESSURE REGULATION FEATURE, SET VALVE PRESSURE AS PER MANUFACTURERS RECOMMENDATIONS TO THE PRESSURE AS FOLLOWS:

POP-UP SPRAY HEADS:	35 – 40 PSI
INTERMEDIATE POP-UP ROTOR HEADS:	50 – 55 PSI
POP-UP ROTOR HEADS:	60 – 70 PSI
BUBBLER HEADS:	30 – 40 PSI

VALVE BOX, SETTINGS, AND CLEARANCES

COMPONENTS INSTALLATION

5 AUTOMATIC CONTROL VALVE/BALL VALVE DETAIL

NOTES:
1. COORDINATE EXACT LOCATION WITH ELECTRICAL SUBCONTRACTOR.
2. INSTALL CONTROLLER TO WALL WITH MOUNTING KIT.
3. AUTOMATIC CONTROLLER TO BE INSTALLED PLUMB AND LEVEL.

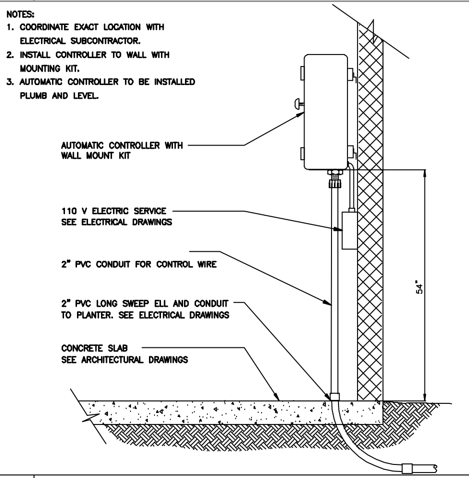

6 AUTOMATIC CONTROLLER DETAIL

NOTES:
1. INSTALL VALVE BOXES SO THAT THE TOP OF THE BOX IS FLUSH WITH THE TOP OF ADJACENT SURFACE.
2. USE TEFLON TAPE ON ALL THREADED CONNECTIONS.

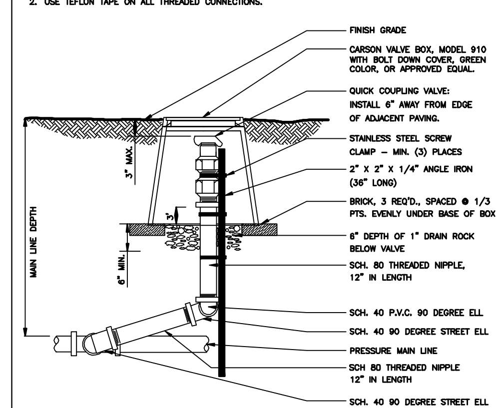

7 QUICK COUPLING VALVE DETAIL

NOTES:
1. INSTALL 1 EMITTER PER BOX.
2. PLACE EMITTER BOXES IN STRAIGHT LINES WHENEVER POSSIBLE.

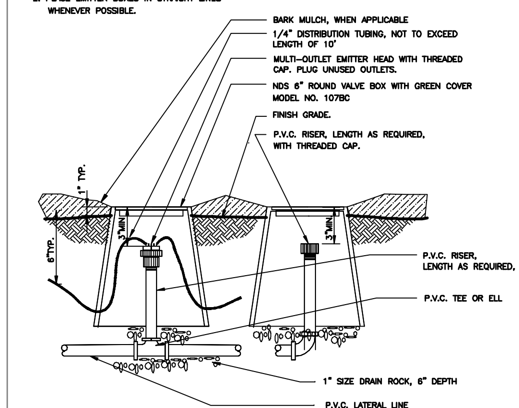

8 DRIP EMITTER AND FLUSH PLUG DETAIL

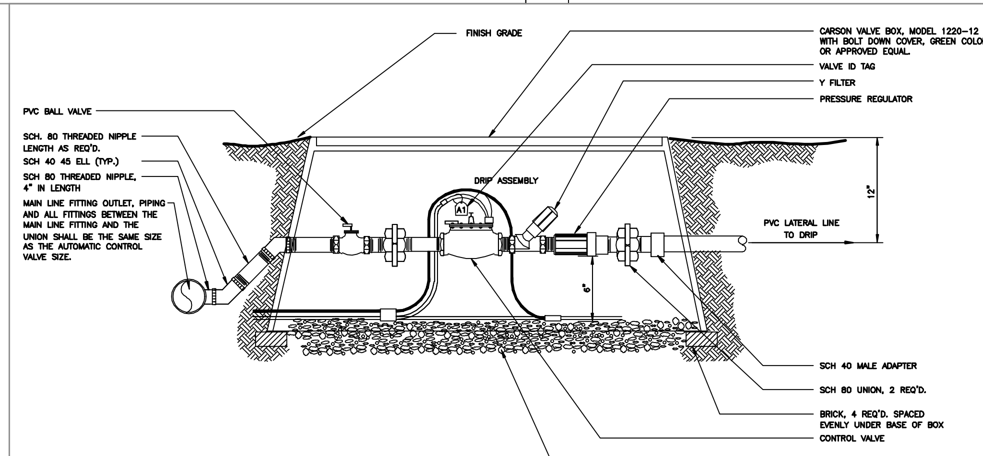

9 PRESSURE REGULATOR DRIP IRRIGATION VALVE DETAIL

NOTES:
1. A SWING JOINT ASSEMBLY IS NOT REQUIRED FOR THIS INSTALLATION.
2. SEE TREE PLANTING DETAIL FOR ADDITIONAL INFORMATION.

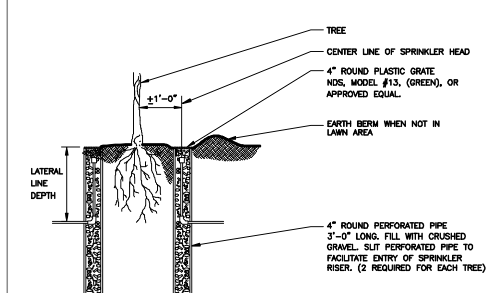

10 TREE BUBBLER HEAD DETAIL

NOTE:
1. COMPACT SOIL AROUND PLASTIC VALVE BOX TO SAME DENSITY AS SURROUNDING UNDISTURBED SOIL.

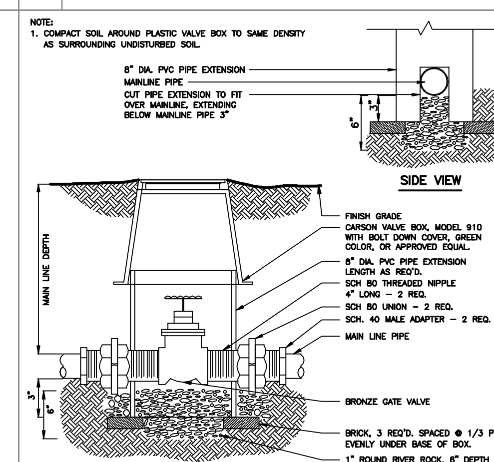

11 GATE VALVE DETAIL, 3' SIZE AND SMALLER

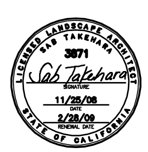

Sab Takehara C-3871

08-48

MTW group

LINE IS 2 INCHES AT FULL SIZE (IF NOT 2"-SCALE ACCORDINGLY)

FILE
DRAWN BW
DESIGNED BW
CHECKED ST
CHECKED

THIS DRAWING IS NOT VALID FOR CONSTRUCTION PURPOSES UNLESS IT BEARS THE SEAL AND SIGNATURE OF A DULY REGISTERED PROFESSIONAL

LUHDORFF & SCALMANINI CONSULTING ENGINEERS

REVISIONS

ZONE	REV.	DESCRIPTION	BY	DATE	APP.

SACRAMENTO SUBURBAN WATER DIST.

SUBMITTED: DATE:
SUBMITTAL APPROVED: DATE:

LANDSCAPE & SPRINKLER IRRIGATION DETAILS

SCALE

DRAWING NUMBER L3

SHEET NUMBER 36 OF 52

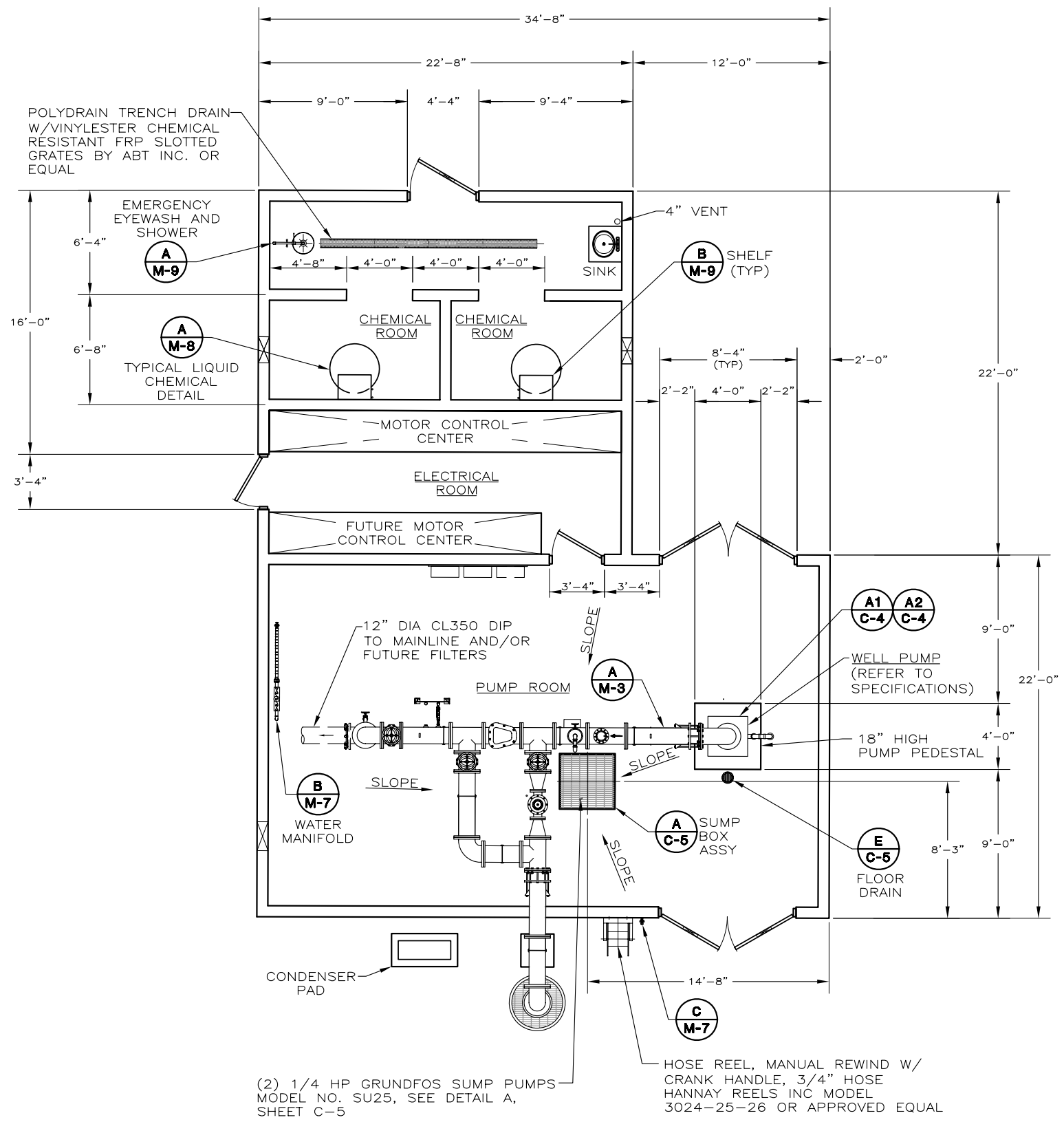

NOTE:

FOR DRAIN, WATER AND CHEMICAL PIPING LOCATED BELOW THE FLOOR SEE SHEET M-2. FOR ELECTRICAL CONDUIT SEE SHEET E-10 AND E-11.

PUMPHOUSE ARRANGEMENT

DATE: November 2008

LINE IS 2 INCHES AT FULL SIZE (IF NOT 2"-SCALE ACCORDINGLY)

FILE M-1.dwg
DRAWN TAD
DESIGNED TAD
CHECKED WG
CHECKED

REGISTERED PROFESSIONAL ENGINEER JOSEPH C. SCALMANINI No. 28233 Exp. 12-31-2010 CIVIL STATE OF CALIFORNIA

LUHDORFF & SCALMANINI CONSULTING ENGINEERS

REVISIONS

ZONE	REV.	DESCRIPTION	BY	DATE	APP.

SACRAMENTO SUBURBAN WATER DIST.
VERNER AVENUE
WELL AND TREATMENT FACILITIES

SUBMITTED: _____ DATE: _____
SUBMITTAL APPROVED: _____ DATE: _____

PUMP AND CHEMICAL BUILDING ARRANGEMENT

SCALE: AS NOTED

DRAWING NUMBER: M-1

SHEET NUMBER: 37 OF 52

CAD FILE: G:/Projects/Sacramento Suburban W D/07-3-075/BID_SET/M-1.dwg CFG FILE: LSCE2500.PCP_MRG DATE: 11-25-08 11:28am

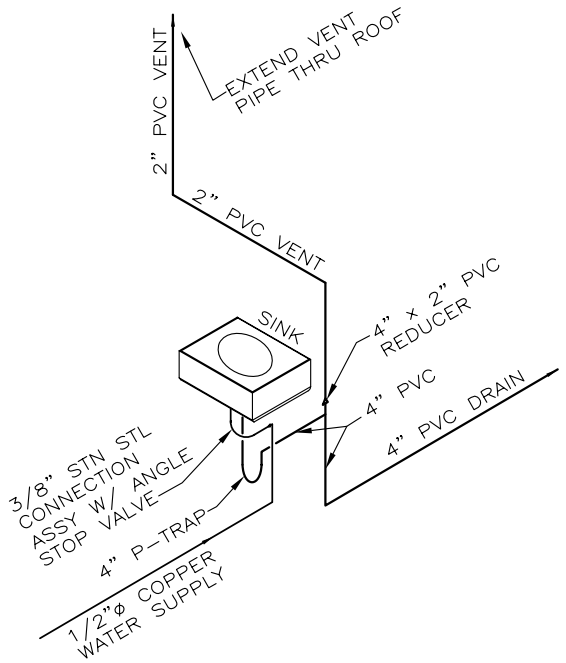

LAVATORY PIPING (A / M-2)

N.T.S.

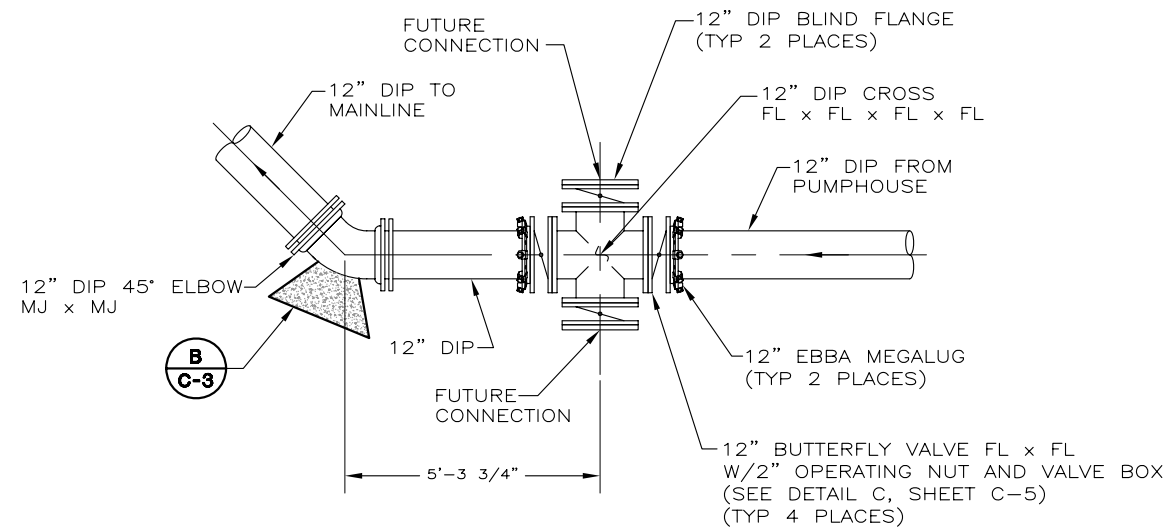

WATER TIE-IN CONNECTION FOR FUTURE FILTERS (B / C-1)

N.T.S.

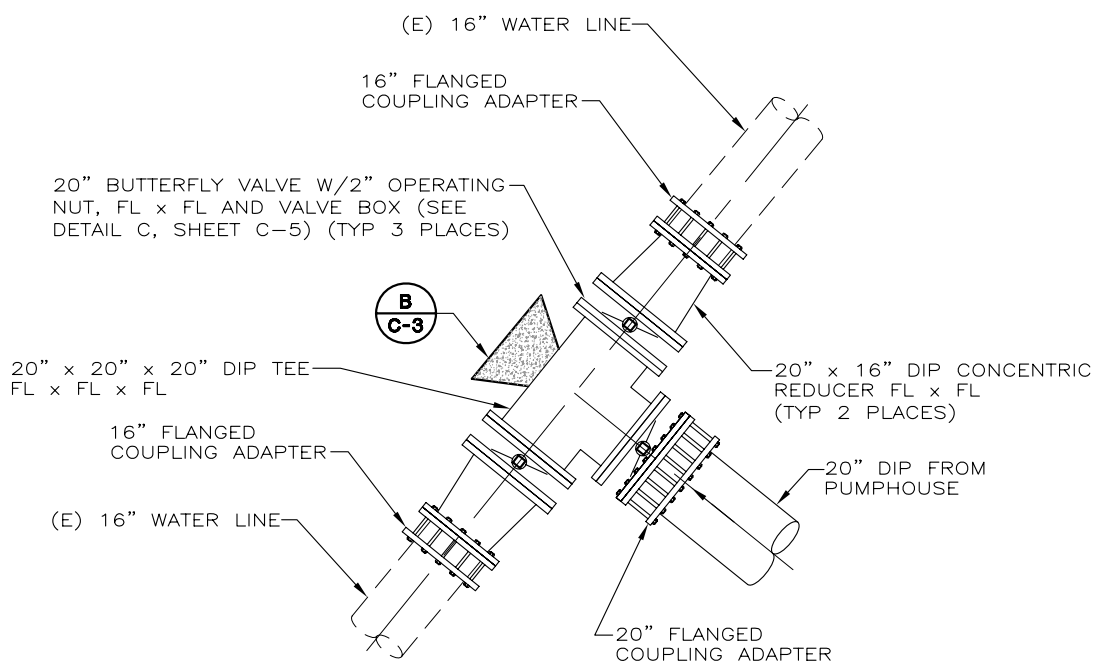

WATER TIE-IN CONNECTION (C / C-1)

N.T.S.

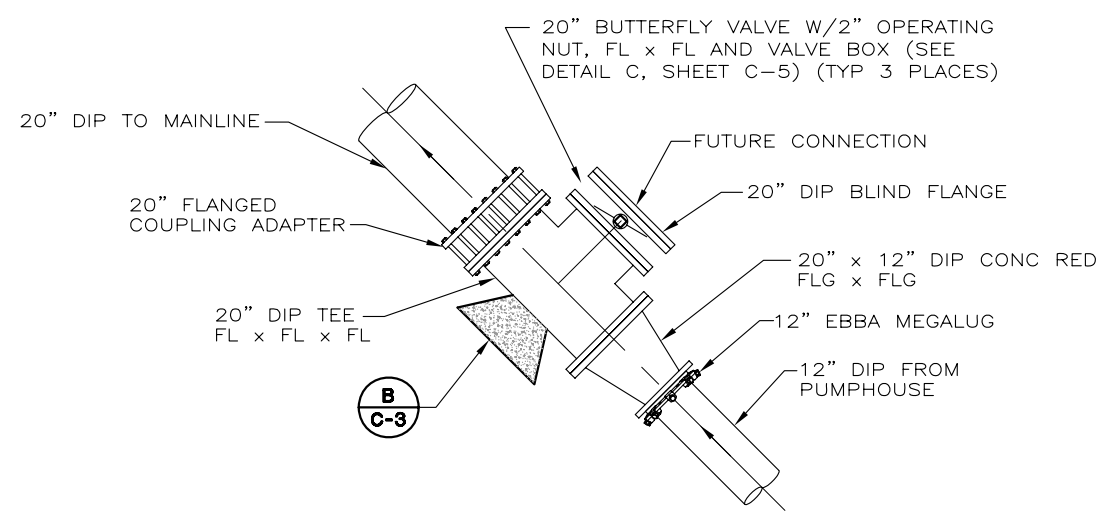

WATER TIE-IN CONNECTION FOR FUTURE BOOSTER PUMPS (D / C-1)

N.T.S.

CAD FILE: G:/Projects/Sacramento Suburban W D/07-3-075/BID_SET/M-10.dwg CFG FILE: LSCE2500.PCP_MRG DATE: 11-25-08 11:44am

DATE: November 2008

LINE IS 2 INCHES AT FULL SIZE (IF NOT 2"-SCALE ACCORDINGLY)

FILE M-10.dwg
DRAWN TAD
DESIGNED TAD
CHECKED WG
CHECKED

REGISTERED PROFESSIONAL ENGINEER JOSEPH C. SCALMANINI No. 28233 Dec. 3, 2010 CIVIL STATE OF CALIFORNIA

LUHDORFF & SCALMANINI CONSULTING ENGINEERS

REVISIONS

ZONE	REV.	DESCRIPTION	BY	DATE	APP.

SACRAMENTO SUBURBAN WATER DIST.
VERNER AVENUE WELL AND TREATMENT FACILITIES

SUBMITTED: _____ DATE: _____
SUBMITTAL APPROVED: _____ DATE: _____

MECHANICAL DETAILS

SCALE N.T.S.

DRAWING NUMBER M-10

SHEET NUMBER 46 OF 52

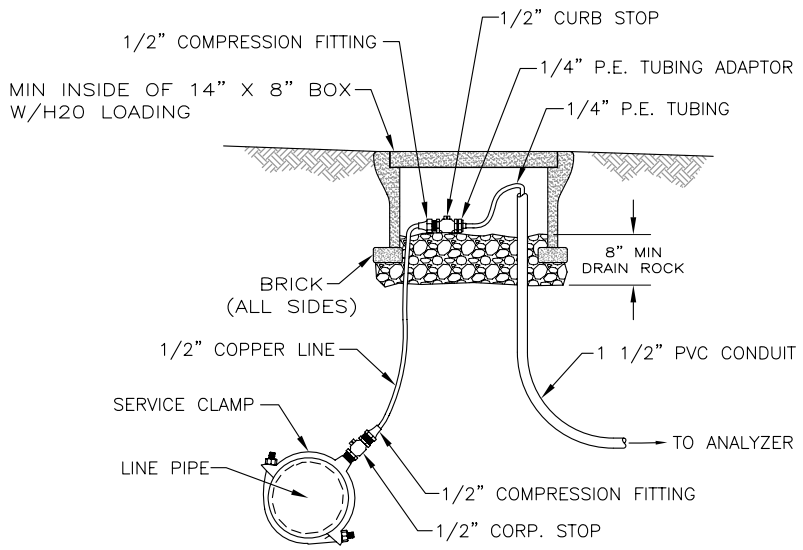

ANALYZER CONNECTION (A / C-1)

N.T.S.

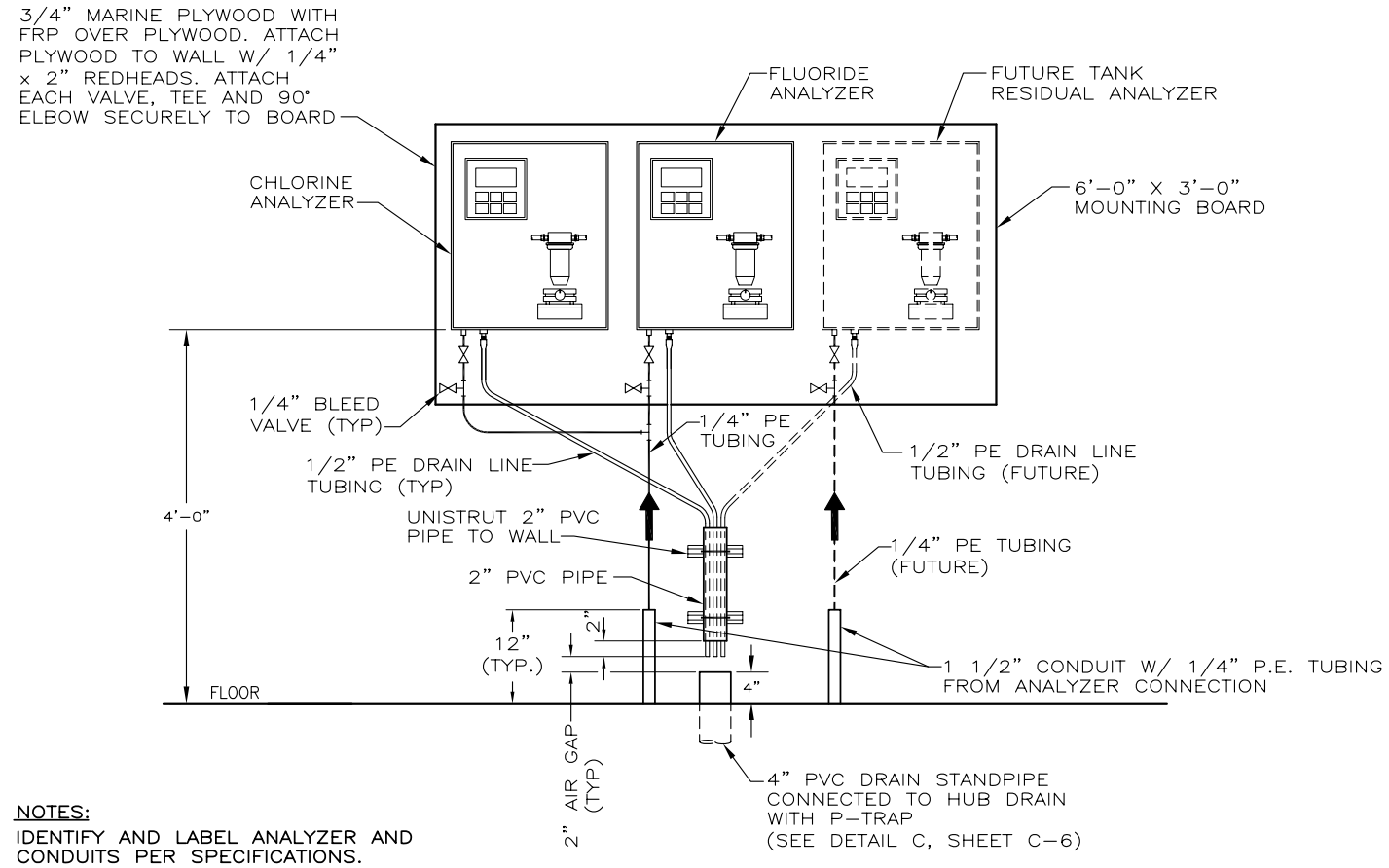

NOTES:
IDENTIFY AND LABEL ANALYZER AND CONDUITS PER SPECIFICATIONS.

ANALYZER DETAIL (B / M-2)

N.T.S.

CAD FILE: G:/Projects/Sacramento Suburban W D/07-3-075/BID_SET/M-11.dwg CFG FILE: LSCE2500.PCP_MRG DATE: 11-25-08 11:46am

DATE: November 2008

LINE IS 2 INCHES AT FULL SIZE (IF NOT 2"-SCALE ACCORDINGLY)

FILE M-11.dwg
DRAWN TAD
DESIGNED TAD
CHECKED WG
CHECKED

REGISTERED PROFESSIONAL ENGINEER JOSEPH C. SCALMANINI No. 28233 Exp. 3-31-2010 CIVIL STATE OF CALIFORNIA

LUHDORFF & SCALMANINI CONSULTING ENGINEERS

REVISIONS

ZONE	REV.	DESCRIPTION	BY	DATE	APP.

SACRAMENTO SUBURBAN WATER DIST.
VERNER AVENUE
WELL AND TREATMENT FACILITIES

SUBMITTED: _____ DATE: _____
SUBMITTAL APPROVED: _____ DATE: _____

ANALYZER CONNECTION AND DETAILS

SCALE N.T.S.
DRAWING NUMBER M-11
SHEET NUMBER 47 OF 52

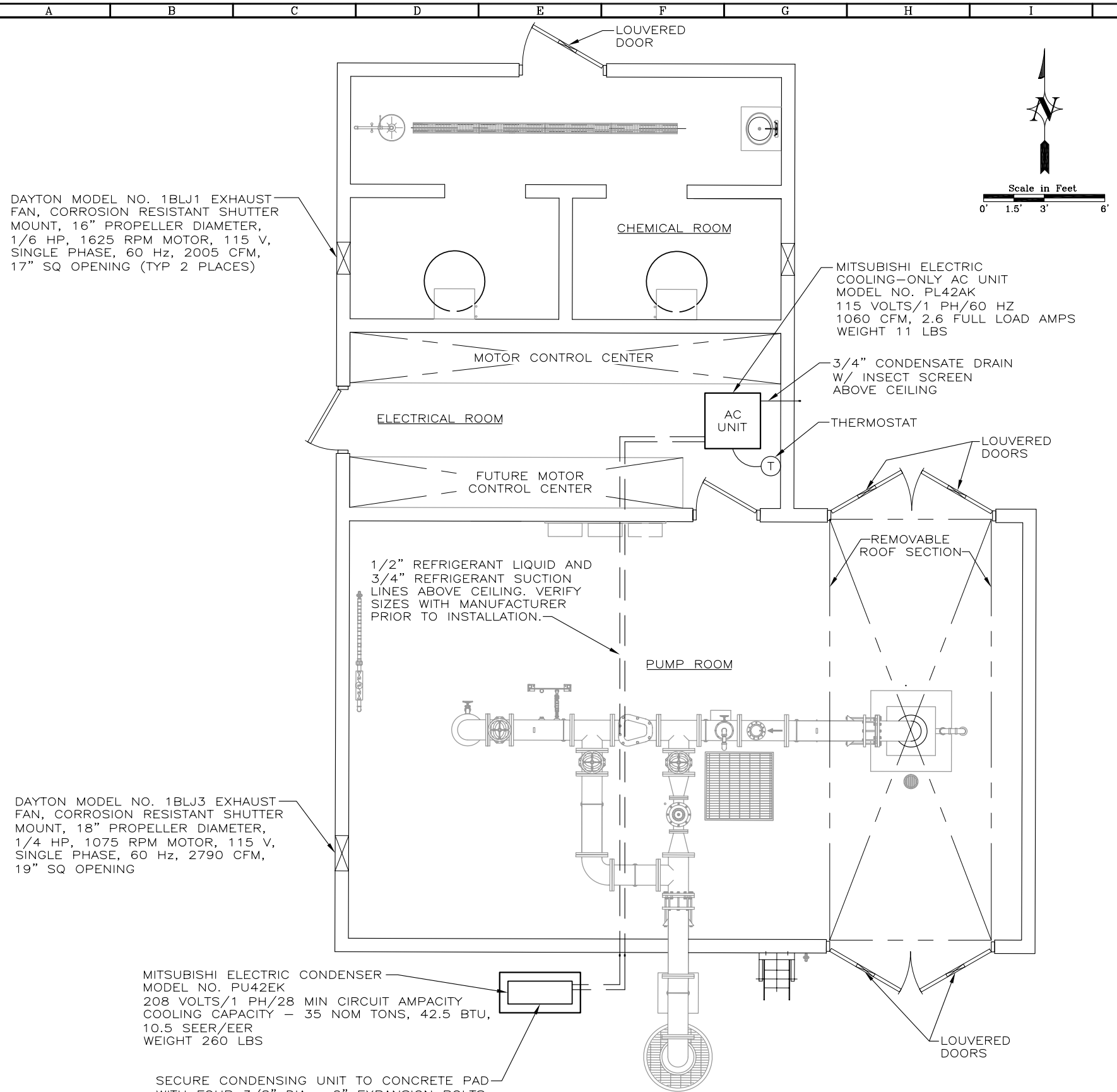

VENTILATION PLAN

N.T.S.

MECHANICAL SPECIFICATION

PART 1 – GENERAL

1. ALL WORK SHALL BE IN ACCORDANCE WITH 1997 UNIFORM BUILDING CODE AND 2001 CALIFORNIA AMENDMENTS (2001 CALIFORNIA BUILDING CODE – PART 2, TITLE 24, CCR) AND APPLICABLE LOCAL, STATE AND FEDERAL CODES, LAWS AND REGULATIONS, WHICHEVER ARE MOST STRINGENT.
2. PLANS ARE DIAGRAMMATIC, DO NOT SCALE FOR MATERIAL QUANTITIES. ALL SCALING SHOULD BE REFERENCED TO STRUCTURAL PLANS ONLY.
3. DURING ENTIRE CONSTRUCTION PERIOD MAINTAIN ADEQUATE 2A.4CBC FIRE EXTINGUISHERS FOR USE IN CASE OF FIRE.
4. PROTECTION OF PUBLIC: THE CONTRACTOR SHALL PROTECT THE PUBLIC FROM INJURY DURING PROGRESS OF THE WORK BY POSTING WARNING SIGNS, GUARD LIGHTS AND BARRICADES AS REQUIRED.
5. COORDINATE ALL WORK WITH VARIOUS TRADES IN INSTALLING ALL WORK TO CLEAR ARCHITECTURAL AND STRUCTURAL MEMBERS. NO WORK SUCH AS PIPE, DUCT, ETC. TO BE IN CONTACT WITH ANY EQUIPMENT.
6. COORDINATE ALL CUTTING AND PATCHING WITH GENERAL CONTRACTOR AND OTHER DISCIPLINES. CONTRACTOR SHALL BE RESPONSIBLE FOR ALL CUTTING AND PATCHING RELATED TO HIS WORK.
7. OBTAIN WRITTEN PERMISSION OF STRUCTURAL ENGINEER BEFORE PROCEEDING WITH ANY CUTTING OR PATCHING OF STRUCTURAL SYSTEMS. DO NOT CUT ROOF FRAMING.
8. RESTORE ALL DAMAGE RESULTING FROM YOUR WORK AND LEAVE PREMISES IN CLEAN CONDITION WHEN FINISHED WITH WORK.

PART 2 – AC UNIT

1. ALL MECHANICAL WORK SHALL COMPLY WITH THE REQUIREMENTS OF THE 2000 UNIFORM MECHANICAL CODE AND 2001 CALIFORNIA AMENDMENTS (2001 CALIFORNIA MECHANICAL CODE – PART 4, TITLE 24, CCR)
2. ALL MATERIALS SHALL HAVE A MAXIMUM FLAME-SPREAD INDEX OF 25 AND A MAXIMUM SMOKE-DEVELOPED INDEX OF 50 AS TESTED BY ASTM E84 (NPPA 255) METHOD.
3. ALL MECHANICAL EQUIPMENT SHALL BE SEISMICALLY BRACED AND ANCHORED INACCORDANCE WITH SMACNA STANDARD " GUIDELINES FOR SEISMIC RESTRAINTS OF MECHANICAL SYSTEMS AND PLUMBING PIPING SYSTEMS" AND STANDARDS AND THE 2001 CALIFORNIA BUILDING CODES.
4. PROVIDE FLASHING AND COUNTERFLASHING FOR ALL PENETRATIONS THROUGH WALLS OR ROOF TO MAKE WATERPROOF INSTALLATION.
5. COORDINATE RETURN GRILLES WITH CEILING GRID, LIGHTS, SEISMIC BRACING, TELEPHONE EQUIPMENT, HEAT SENSORS, ETC.
6. SUPPORT ALL PIPING SO THAT IT IS FIRMLY HELD IN PLACE BY APPROVED IRON HANGERS AND SUPPORTS, IN ACCORDANCE WITH RECOMMENDATIONS OF AMERICAN PIPEFITTERS ASSOCIATION AND PIPE HANGER INSTITUTE.

DATE: November 2008

LINE IS 2 INCHES AT FULL SIZE (IF NOT 2"-SCALE ACCORDINGLY)

FILE M-12.dwg
DRAWN TAD
DESIGNED TAD
CHECKED WG
CHECKED

REGISTERED PROFESSIONAL ENGINEER JOSEPH C. SCALMANINI No. 28233 Exp. 3-31-2010 CIVIL STATE OF CALIFORNIA

LUHDORFF & SCALMANINI CONSULTING ENGINEERS

REVISIONS

ZONE	REV.	DESCRIPTION	BY	DATE	APP.

SACRAMENTO SUBURBAN WATER DIST.
VERNER AVENUE WELL AND TREATMENT FACILITIES

SUBMITTED: _____ DATE: _____
SUBMITTAL APPROVED: _____ DATE: _____

VENTILATION PLAN

SCALE N.T.S.
DRAWING NUMBER M-12
SHEET NUMBER 48 OF 52

CAD FILE: G:/Projects/Sacramento Suburban W D/07-3-075/BID_SET/M-12.dwg CFG FILE: LSCE2500.PCP_MRG DATE: 11-25-08 11:47am

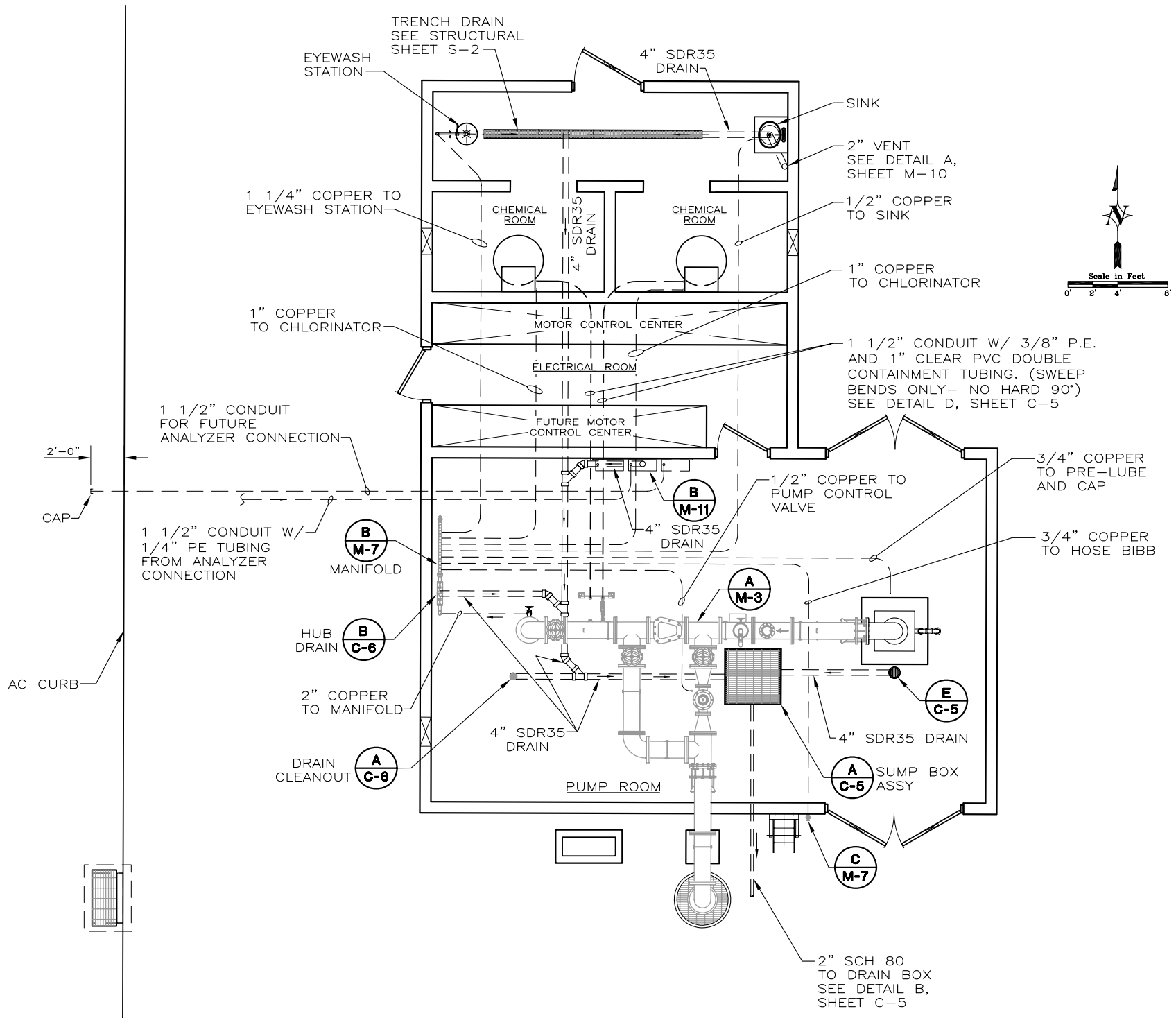

PLUMBING AND CONDUIT PIPING ARRANGEMENT

DATE: November 2008

LINE IS 2 INCHES AT FULL SIZE (IF NOT 2"-SCALE ACCORDINGLY)

FILE M-2.dwg
DRAWN TAD
DESIGNED TAD
CHECKED WG
CHECKED

REGISTERED PROFESSIONAL ENGINEER JOSEPH C. SCALMANINI No. 28233 Dec 3, 2010 CIVIL STATE OF CALIFORNIA

LUHDORFF & SCALMANINI CONSULTING ENGINEERS

REVISIONS

ZONE	REV.	DESCRIPTION	BY	DATE	APP.

SACRAMENTO SUBURBAN WATER DIST.
VERNER AVENUE
WELL AND TREATMENT FACILITIES

SUBMITTED: _____ DATE: _____
SUBMITTAL APPROVED: _____ DATE: _____

PLUMBING AND CONDUIT PIPING ARRANGEMENT

SCALE
AS NOTED

DRAWING NUMBER
M-2

SHEET NUMBER
38 OF 52

CAD FILE: G:/Projects/Sacramento Suburban W D/07-3-075/BID_SET/M-2.dwg CFG FILE: LSCE2500.PCP_MRG DATE: 11-25-08 11:30am

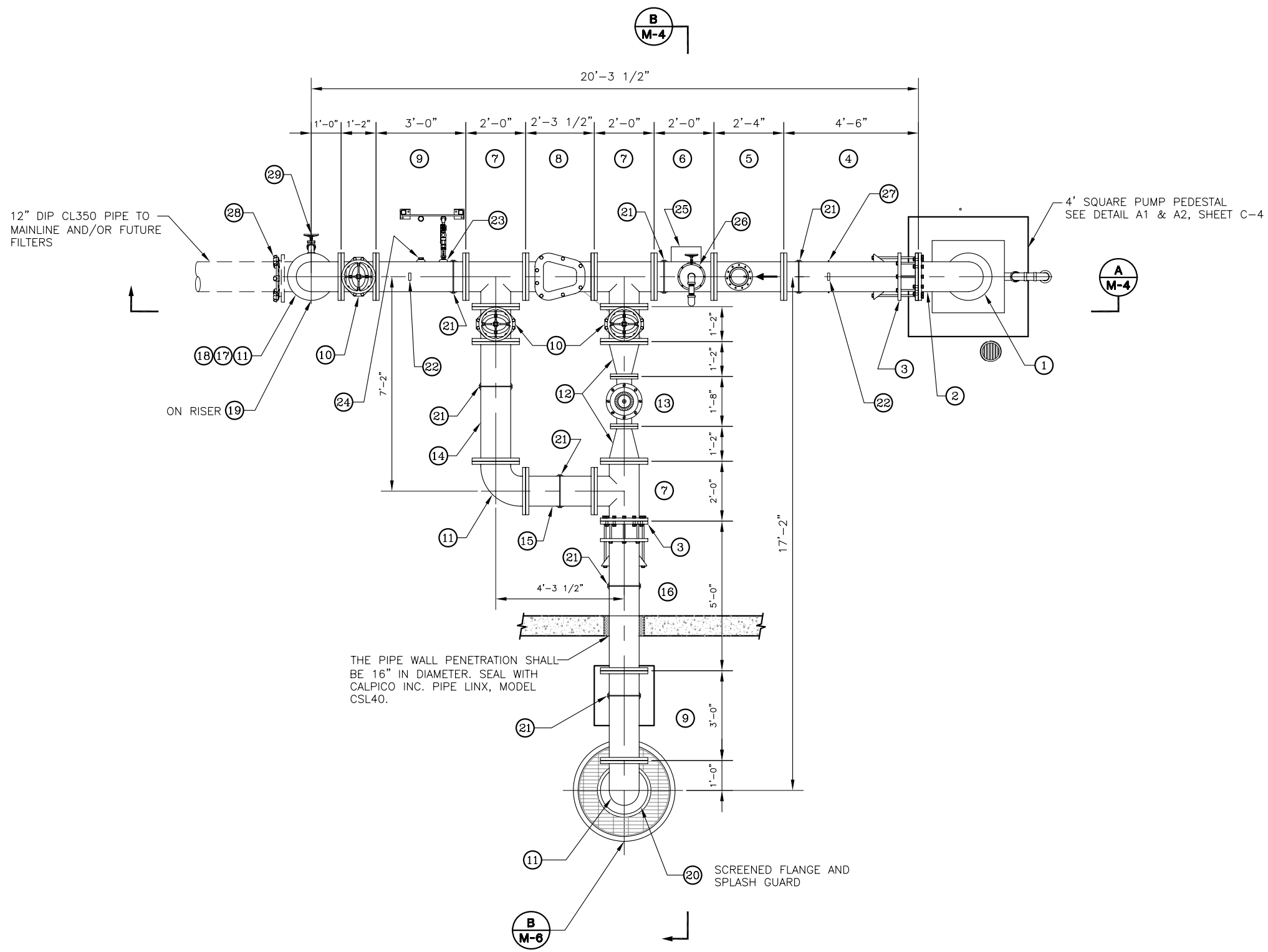

PLAN VIEW OF STATION PIPING (A M-1)

SCHEDULE OF MATERIALS

1. PUMP & MOTOR (REFER TO SPECIFICATIONS)
2. 12" FLANGED, FABRICATED STEEL DISCHARGE HEAD
3. 12" FLANGED COUPLING ADAPTOR W/TIE RODS (SEE DETAIL A, SHEET M-5)
4. 12" x 4'-6" BSP SPOOL, PE x FL
5. 12" MAGFLOWMETER, FL x FL, (SEE SPECIFICATION)
6. 12" x 2'-0" BSP SPOOL, FL x FL.
7. 12" BSP TEE, FL x FL x FL
8. 12" CHECK VALVE W/OPENING & CLOSING SPEED CONTROL, FL x FL
9. 12" x 3'-0" BSP SPOOL, FL x FL
10. 12" FLANGED GATE VALVE, OS & Y
11. 12" BSP 90° ELBOW, FL x FL
12. 12" x 6" BSP CONC RED, FL x FL
13. 6" PUMP CONTROL VALVE (SEE SPECIFICATION)
14. 12" x 4'-0" BSP SPOOL, FL x FL
15. 12" x 2'-3 1/2" BSP SPOOL, FL x FL
16. 12" x 5'-0" BSP SPOOL, FL x FL
17. 12" x AS REQUIRED BSP SPOOL, FL x FL INSTALLED VERT. FROM 12" 90° ELBOW (±4'-6") NOT SHOWN IN PLAN VIEW
18. 12" DIP 90° ELBOW, FL x FL
19. PRESSURE TRANSDUCER/SWITCH ASSEMBLY (SEE DETAIL A, SHEET M-7)
20. INSTALL SCREENED FLANGE AND SPLASH GUARD (SEE DETAIL B, SHEET M-6)
21. 12" ADJUSTABLE PIPE SUPPORT W/PIPE YOKE (SEE DETAIL G, SHEET M-5)
22. 1" HALF COUPLER AND 0-200 PSI PRESSURE GAUGE (SEE DETAIL B, SHEET M-5)
23. 1" HALF COUPLER AND INJECTOR ASSEMBLY (SEE DETAIL B, SHEET M-8)
24. 1" HALF COUPLER W/PLUG (FUTURE INJECTOR ASSEMBLY)
25. SAMPLE TAP ASSEMBLY (SEE DETAIL C, SHEET M-5)
26. 3" HALF COUPLER WITH AIR RELEASE AND VACUUM VALVE ASSEMBLY (SEE DETAIL F, SHEET M-5)
27. TWO (2) 1/4" THREADED TAPS, DIAMETRICALLY OPPOSED W/ PLUGS
28. 12" EBAA MEGALUG MECHANICAL JOINT RESTRAINT
29. 2" HALF COUPLER WITH WATER MANIFOLD CONNECTION (SEE DETAIL C, SHEET M-6)

CAD FILE: G:/Projects/Sacramento Suburban W D/07-3-075/BID_SET/M-3.dwg CFG FILE: LSCE2500.PCP_MRG DATE: 11-25-08 11:32am

DATE: November 2008

LINE IS 2 INCHES AT FULL SIZE (IF NOT 2"-SCALE ACCORDINGLY)

FILE M-3.dwg
DRAWN TAD
DESIGNED TAD
CHECKED WG
CHECKED

REGISTERED PROFESSIONAL ENGINEER JOSEPH C. SCALMANINI No. 28233 Exp. 3-31-2010 CIVIL STATE OF CALIFORNIA

LUHDORFF & SCALMANINI CONSULTING ENGINEERS

REVISIONS

ZONE	REV.	DESCRIPTION	BY	DATE	APP.

SACRAMENTO SUBURBAN WATER DIST.
VERNER AVENUE
WELL AND TREATMENT FACILITIES

SUBMITTED: _____ DATE: _____
SUBMITTAL APPROVED: _____ DATE: _____

STATION PIPING

SCALE 6"=1'-0"

DRAWING NUMBER M-3

SHEET NUMBER 39 OF 52

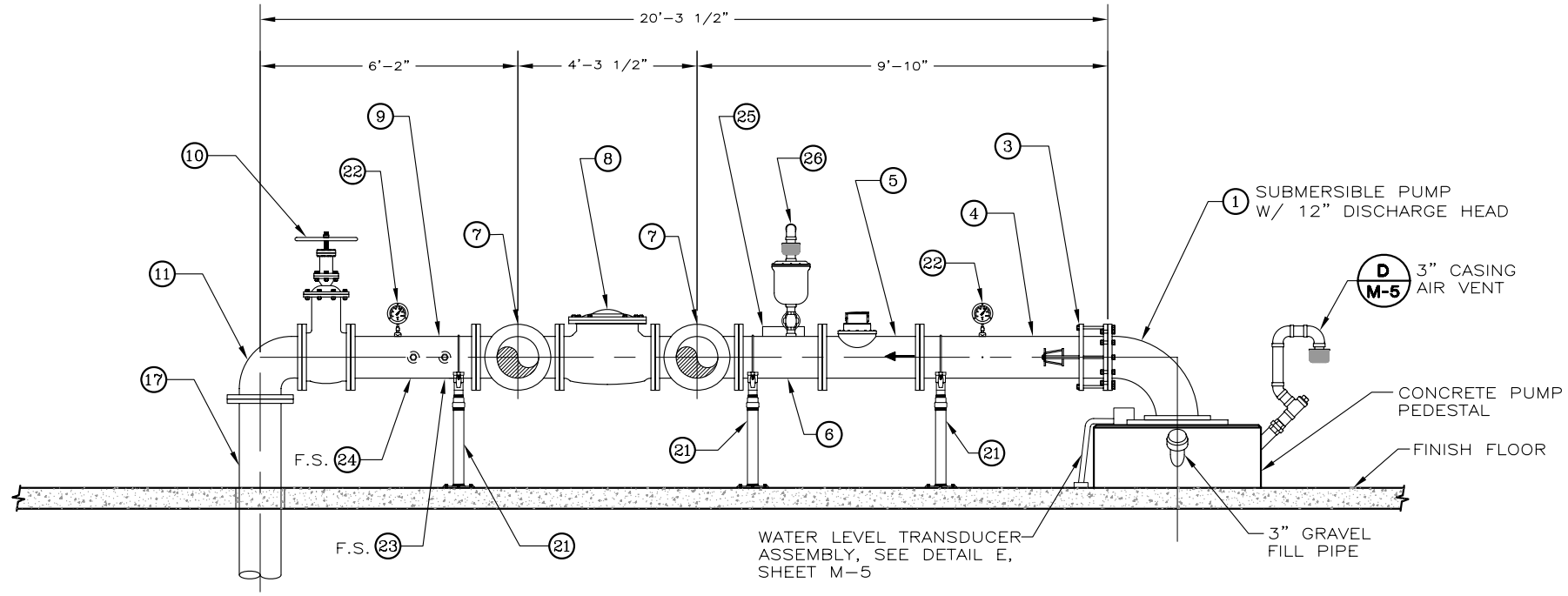

NOTE:
FOR MATERIAL REFERENCE NUMBERS, SEE SHEET M-3

SIDE ELEVATION A M-3
N.T.S.

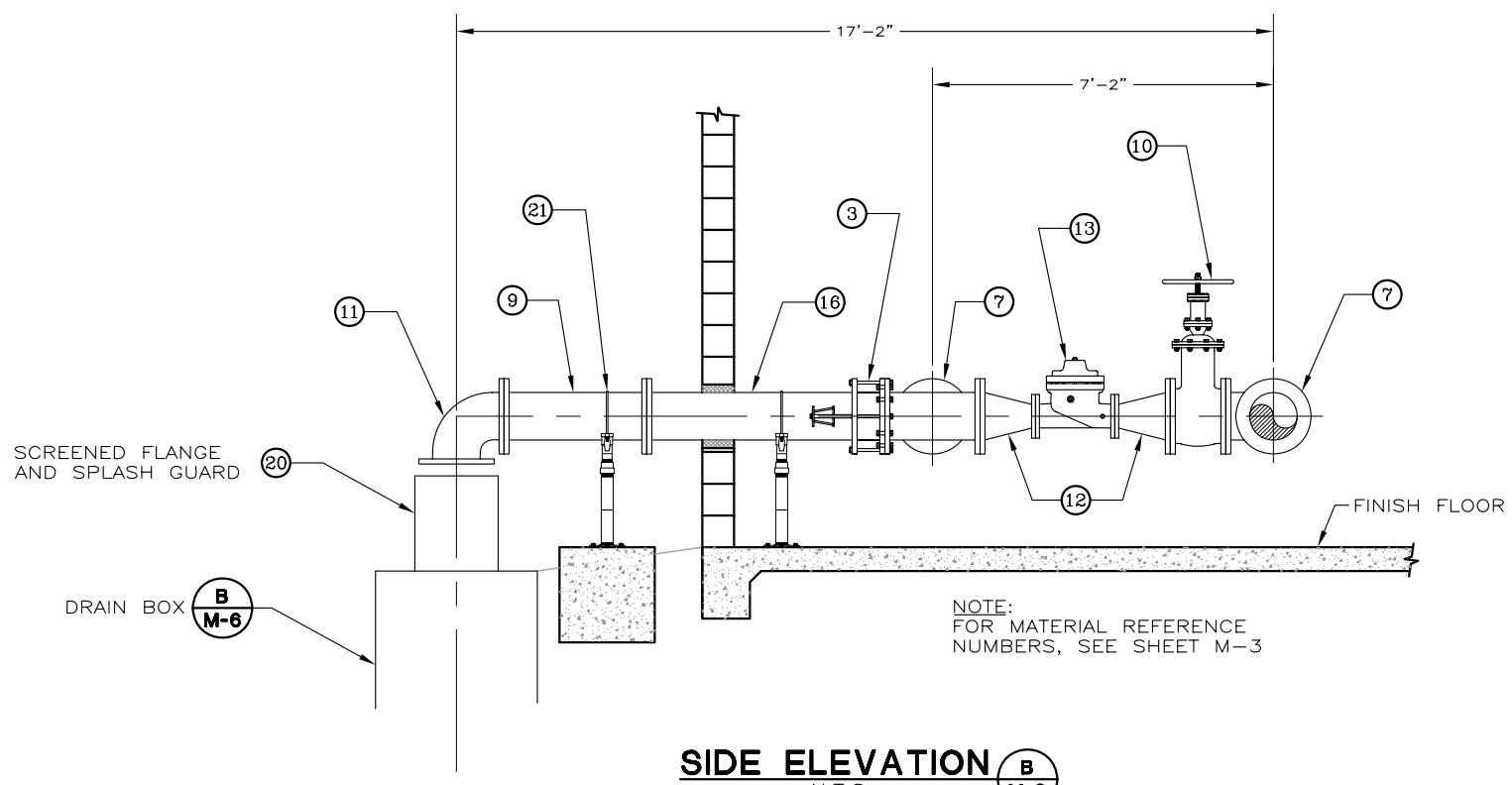

NOTE:
FOR MATERIAL REFERENCE NUMBERS, SEE SHEET M-3

SIDE ELEVATION B M-3
N.T.S.

DATE: November 2008

LINE IS 2 INCHES AT FULL SIZE (IF NOT 2"-SCALE ACCORDINGLY)

FILE M-4.dwg
DRAWN TAD
DESIGNED TAD
CHECKED WG
CHECKED

REGISTERED PROFESSIONAL ENGINEER JOSEPH C. SCALMANINI No. 28233 Exp. 12-31-2010 CIVIL STATE OF CALIFORNIA

LUHDORFF & SCALMANINI CONSULTING ENGINEERS

REVISIONS

ZONE	REV.	DESCRIPTION	BY	DATE	APP.

SACRAMENTO SUBURBAN WATER DIST.
VERNER AVENUE
WELL AND TREATMENT FACILITIES

SUBMITTED: _____ DATE: _____
SUBMITTAL APPROVED: _____ DATE: _____

MECHANICAL DETAILS

SCALE N.T.S.
DRAWING NUMBER M-4
SHEET NUMBER 40 OF 52

CAD FILE: G:/Projects/Sacramento Suburban W D/07-3-075/BID_SET/M-4.dwg CFG FILE: LSCE2500.PCP_MRG DATE: 11-25-08 11:35am

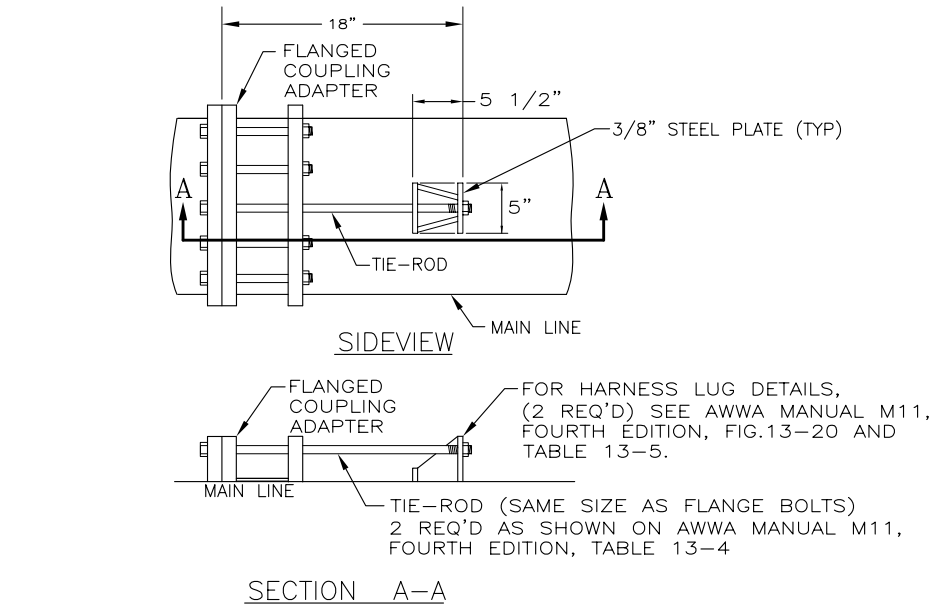

TIE-ROD ASSEMBLY DETAIL (A / M-3)

N.T.S.

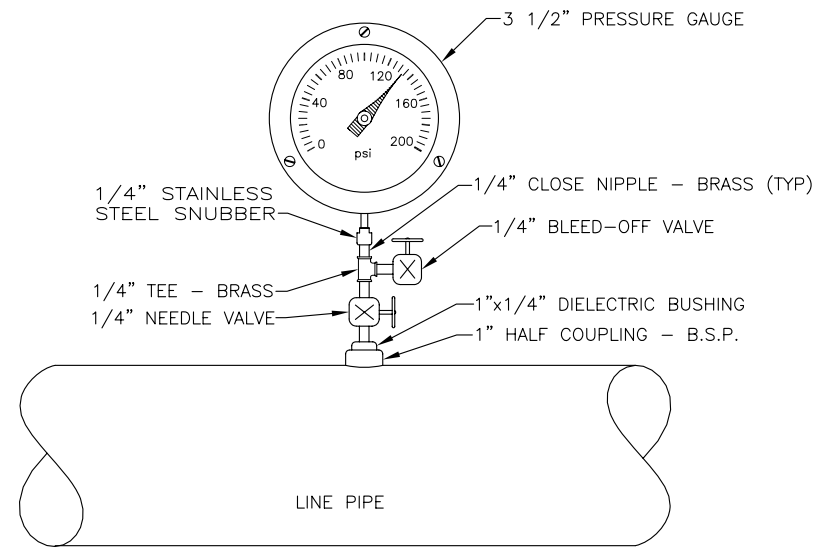

PRESSURE GAUGE DETAIL (B / M-3)

N.T.S.

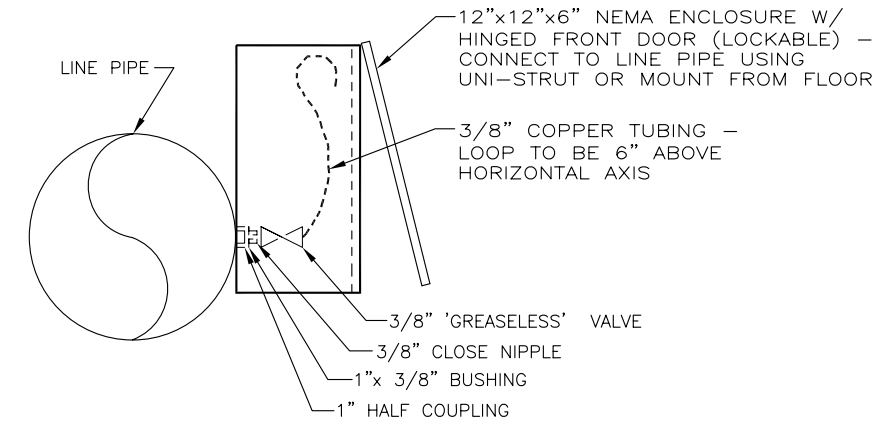

SAMPLE TAP DETAIL (C / M-3)

N.T.S.

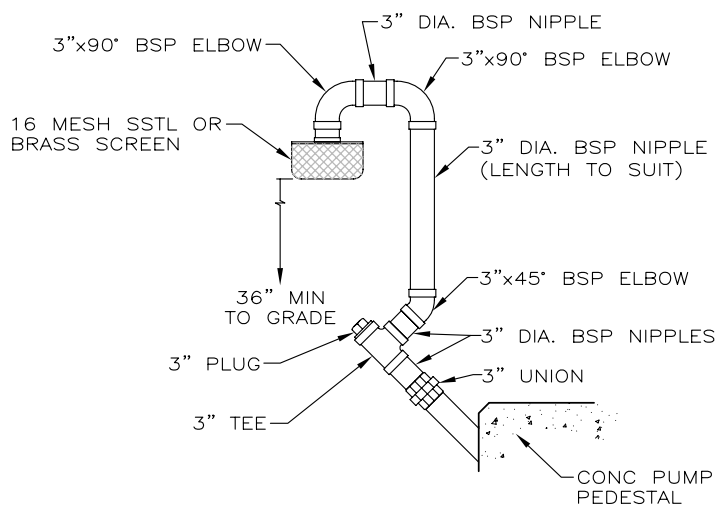

PRODUCTION CASING AIR VENT DETAIL (D / M-4)

N.T.S.

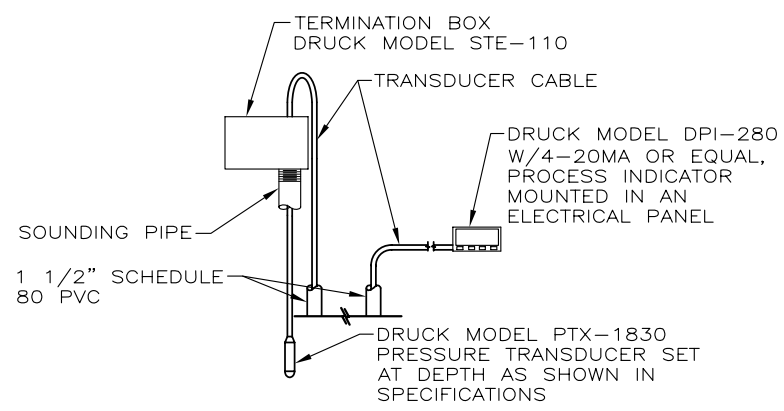

LEVEL TRANSDUCER DETAIL (E / C-4)

N.T.S.

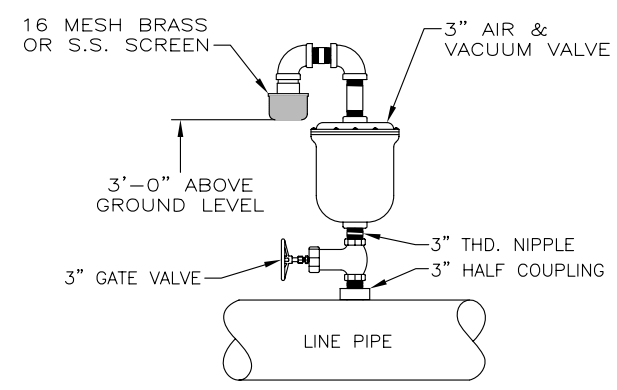

AIR RELEASE AND VACUUM VALVE DETAIL (F / M-3)

N.T.S.

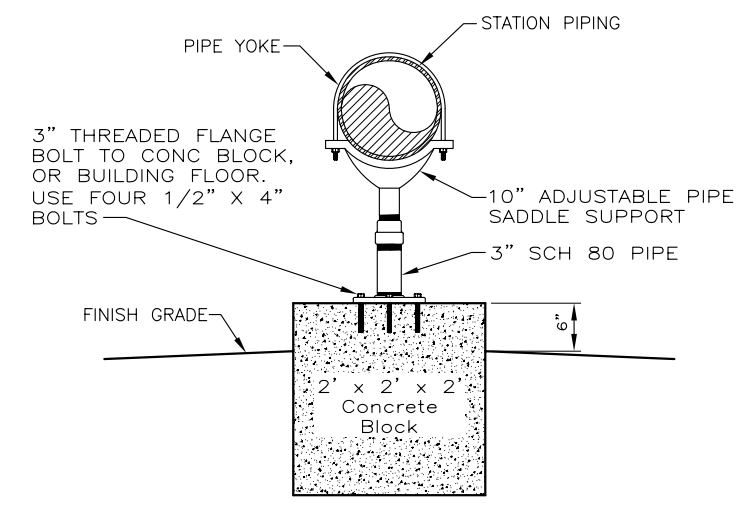

ADJUSTABLE PIPE SUPPORT ASSEMBLY (G / M-3)

N.T.S.

CAD FILE: G:/Projects/Sacramento Suburban W D/07-3-075/BID_SET/M-5.dwg CFG FILE: LSCE2500.PCP_MRG DATE: 11-25-08 11:36am

DATE: November 2008

LINE IS 2 INCHES AT FULL SIZE (IF NOT 2"-SCALE ACCORDINGLY)

FILE M-5.dwg
DRAWN TAD
DESIGNED TAD
CHECKED WG
CHECKED

REGISTERED PROFESSIONAL ENGINEER JOSEPH C. SCALMANINI No. 28233 Exp. 3-31-2010 CIVIL STATE OF CALIFORNIA

LUHDORFF & SCALMANINI CONSULTING ENGINEERS

REVISIONS

ZONE	REV.	DESCRIPTION	BY	DATE	APP.

SACRAMENTO SUBURBAN WATER DIST.
VERNER AVENUE
WELL AND TREATMENT FACILITIES

SUBMITTED: _____ DATE: _____
SUBMITTAL APPROVED: _____ DATE: _____

MECHANICAL DETAILS

SCALE: N.T.S.
DRAWING NUMBER: M-5
SHEET NUMBER: 41 OF 52

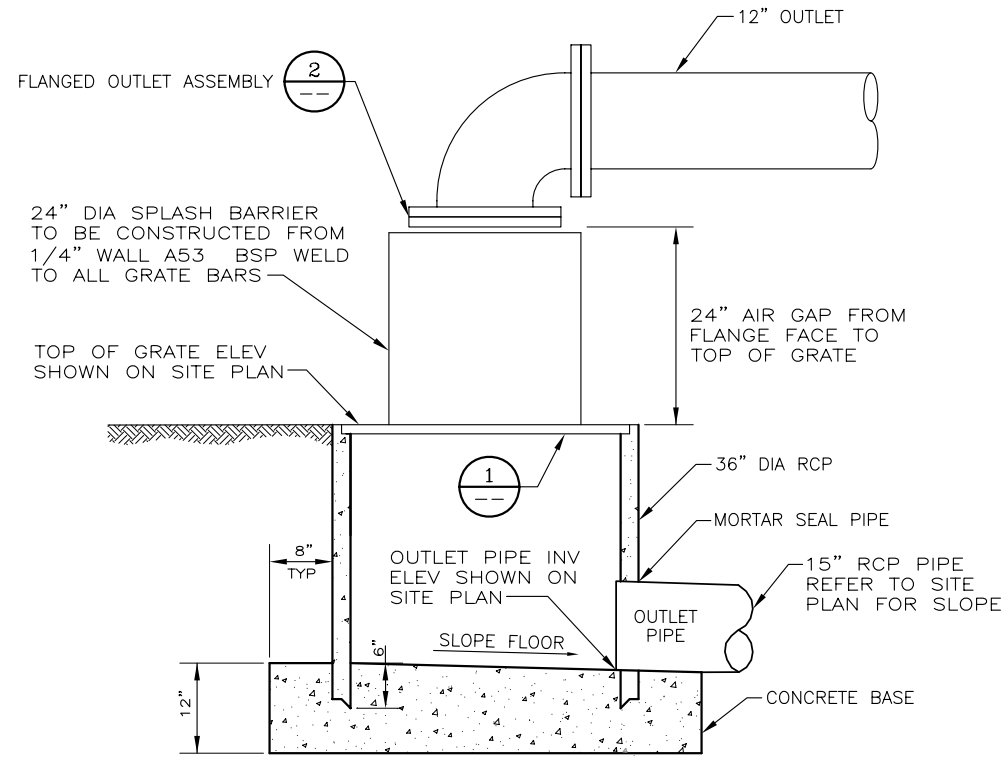

DRAIN BOX DETAIL (B / M-3)

N.T.S.

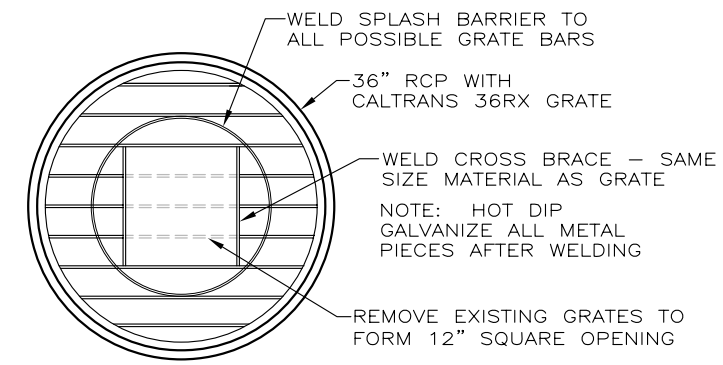

GRATE OPENING (1 / --)

NTS

NOT USED (A / --)

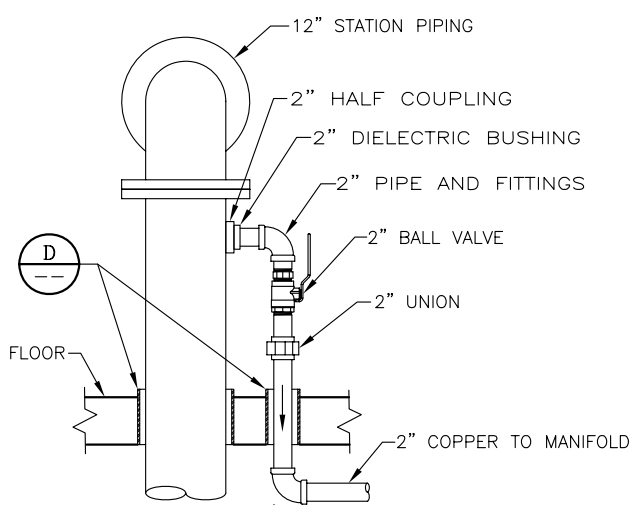

NOTE:
ALL PIPE AND FITTINGS TO BE COPPER

WATER MANIFOLD CONNECTION DETAIL (C / M-3)

N.T.S.

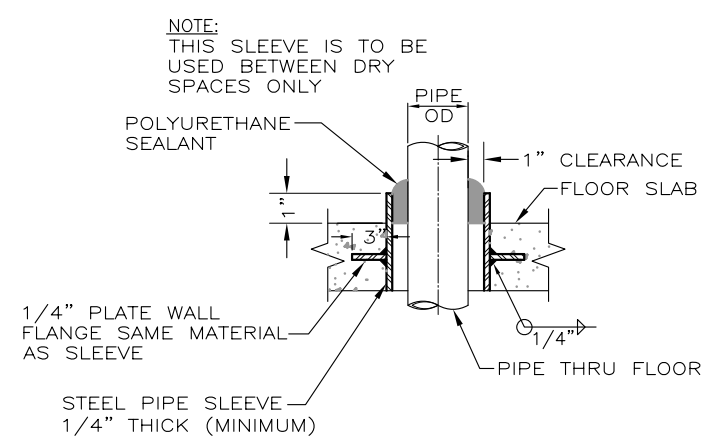

FLOOR SLEEVE (D / VAR)

N.T.S.

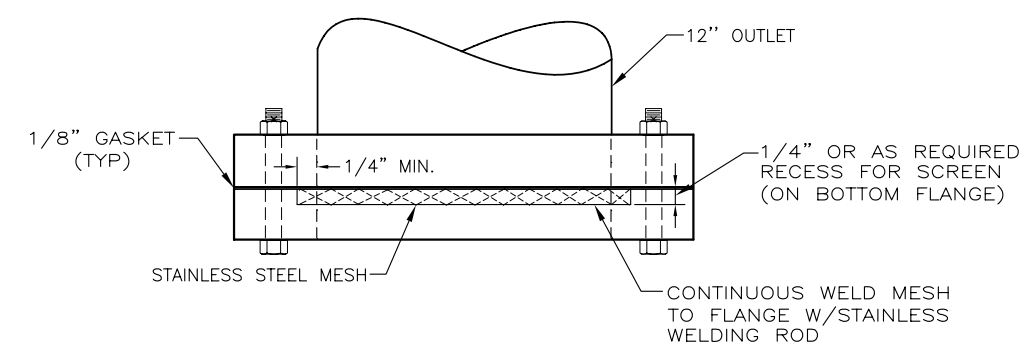

FLANGED OUTLET ASSEMBLY (2 / --)

N.T.S.

DATE: November 2008

LINE IS 2 INCHES AT FULL SIZE (IF NOT 2"–SCALE ACCORDINGLY)

FILE M-6.dwg
DRAWN TAD
DESIGNED TAD
CHECKED WG
CHECKED

REGISTERED PROFESSIONAL ENGINEER JOSEPH C. SCALMANINI No. 28233 Exp. 3-31-2010 CIVIL STATE OF CALIFORNIA

LUHDORFF & SCALMANINI CONSULTING ENGINEERS

REVISIONS

ZONE	REV.	DESCRIPTION	BY	DATE	APP.

SACRAMENTO SUBURBAN WATER DIST.
VERNER AVENUE WELL AND TREATMENT FACILITIES

SUBMITTED: _____ DATE: _____
SUBMITTAL APPROVED: _____ DATE: _____

MECHANICAL DETAILS

SCALE N.T.S.
DRAWING NUMBER M-6
SHEET NUMBER 42 OF 52

CAD FILE: G:/Projects/Sacramento Suburban W D/07-3-075/BID_SET/M-6.dwg CFG FILE: LSCE2500.PCP_MRG DATE: 11-25-08 11:37am

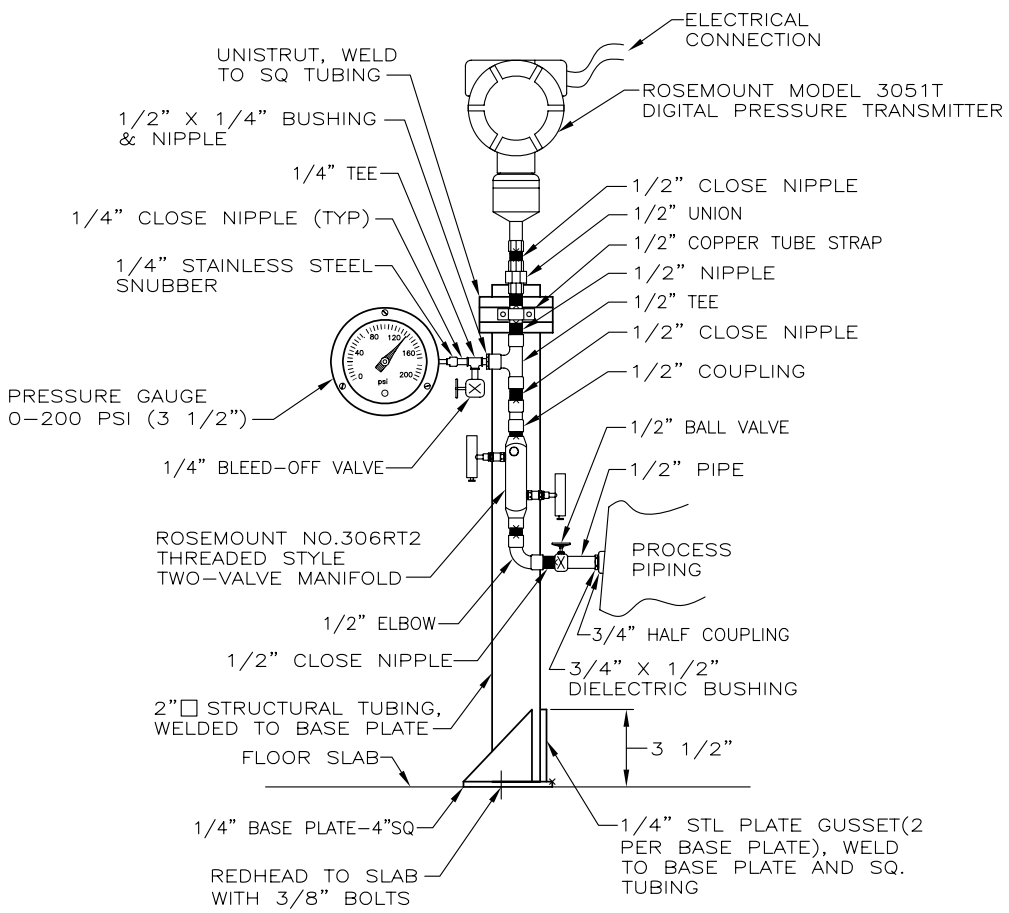

NOTE:
ALL FITTINGS AND PIPE NIPPLES TO BE BRASS

PRESSURE GAUGE AND TRANSDUCER/SWITCH DETAIL (A / M-3)

N.T.S.

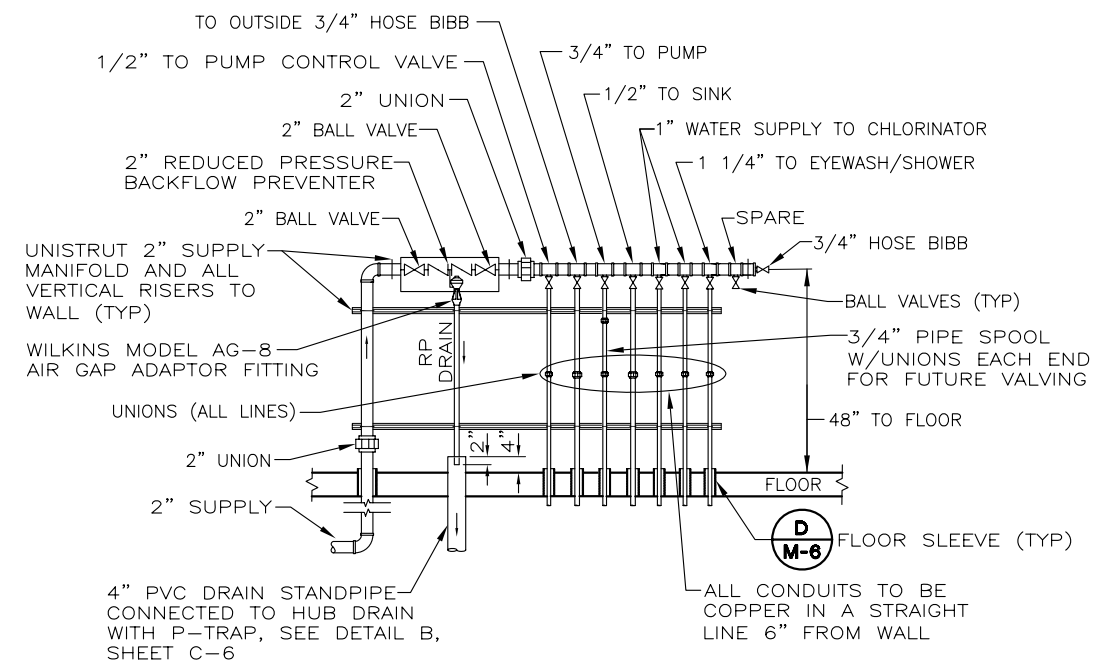

NOTES:
1. ALL MANIFOLD PIPE AND FITTINGS ARE TO BE 2" COPPER OR BRASS
2. IDENTIFY AND LABEL ALL PIPE RUNS PER SPECIFICATION

MANIFOLD DETAIL (B / M-1)

N.T.S.

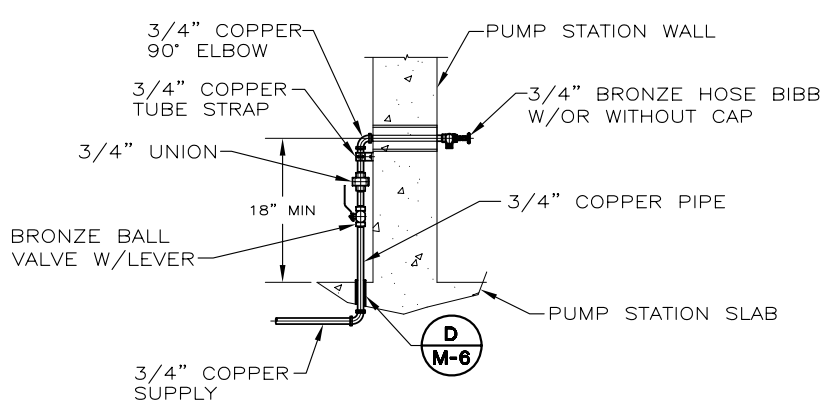

HOSE BIBB DETAIL (C / M-2)

N.T.S.

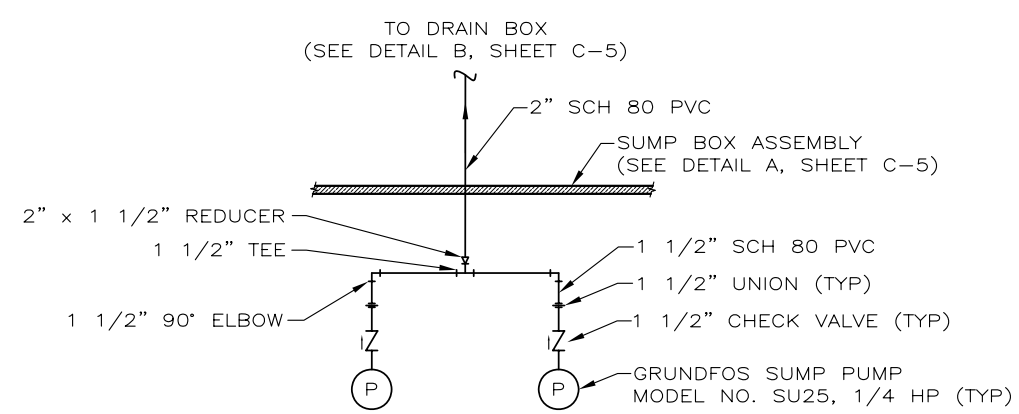

PLAN VIEW PIPING SCHEMATIC (D / C-5)

N.T.S.

DATE: November 2008

LINE IS 2 INCHES AT FULL SIZE (IF NOT 2"-SCALE ACCORDINGLY)

FILE M-7.dwg
DRAWN TAD
DESIGNED TAD
CHECKED WG
CHECKED

REGISTERED PROFESSIONAL ENGINEER JOSEPH C. SCALMANINI No. 28233 Exp. 3-31-2010 CIVIL STATE OF CALIFORNIA

LUHDORFF & SCALMANINI CONSULTING ENGINEERS

REVISIONS					
ZONE	REV.	DESCRIPTION	BY	DATE	APP.

SACRAMENTO SUBURBAN WATER DIST.
VERNER AVENUE WELL AND TREATMENT FACILITIES

SUBMITTED: _____ DATE: _____
SUBMITTAL APPROVED: _____ DATE: _____

MECHANICAL DETAILS

SCALE N.T.S.
DRAWING NUMBER M-7
SHEET NUMBER 43 OF 52

CAD FILE: G:/Projects/Sacramento Suburban W D/07-3-075/BID_SET/M-7.dwg CFG FILE: LSCE2500.PCP_MRG DATE: 11-25-08 11:40am

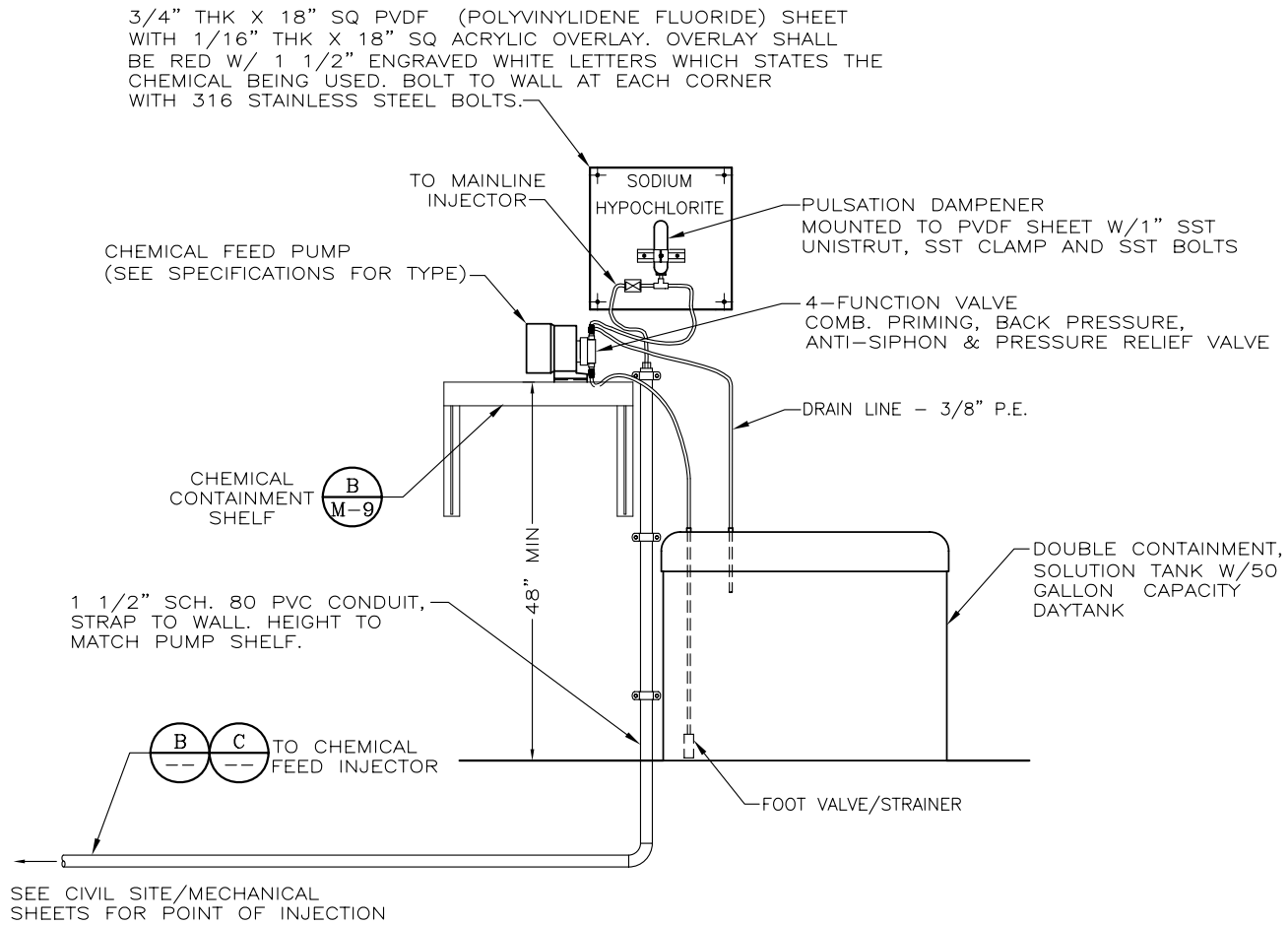

TYPICAL LIQUID CHEMICAL DETAIL

N.T.S.

A M-1

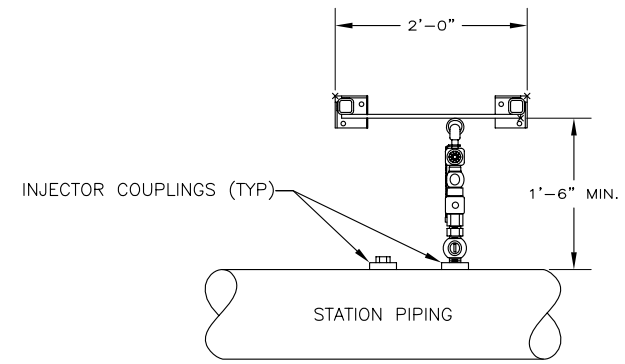

TOP VIEW

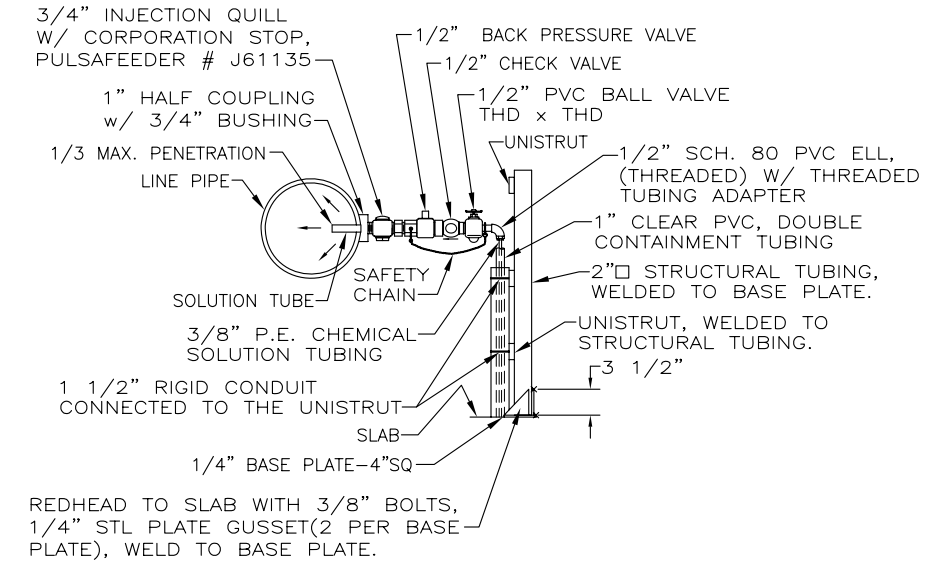

SIDE VIEW

CHEMICAL INJECTOR INSTALLATION DETAIL

N.T.S.

B M-3

DATE: November 2008

LINE IS 2 INCHES AT FULL SIZE (IF NOT 2"-SCALE ACCORDINGLY)

FILE M-8.dwg
DRAWN TAD
DESIGNED TAD
CHECKED WG
CHECKED

REGISTERED PROFESSIONAL ENGINEER JOSEPH C. SCALMANINI No. 28233 Exp. 3-31-2010 CIVIL STATE OF CALIFORNIA

LUHDORFF & SCALMANINI CONSULTING ENGINEERS

REVISIONS

ZONE	REV.	DESCRIPTION	BY	DATE	APP.

SACRAMENTO SUBURBAN WATER DIST.
VERNER AVENUE
WELL AND TREATMENT FACILITIES

SUBMITTED: _____ DATE: _____
SUBMITTAL APPROVED: _____ DATE: _____

CHEMICAL ROOM DETAILS

SCALE N.T.S.

DRAWING NUMBER M-8

SHEET NUMBER 44 OF 52

CAD FILE: G:/Projects/Sacramento Suburban W D/07-3-075/BID_SET/M-8.dwg CFG FILE: LSCE2500.PCP_MRG DATE: 11-25-08 11:42am

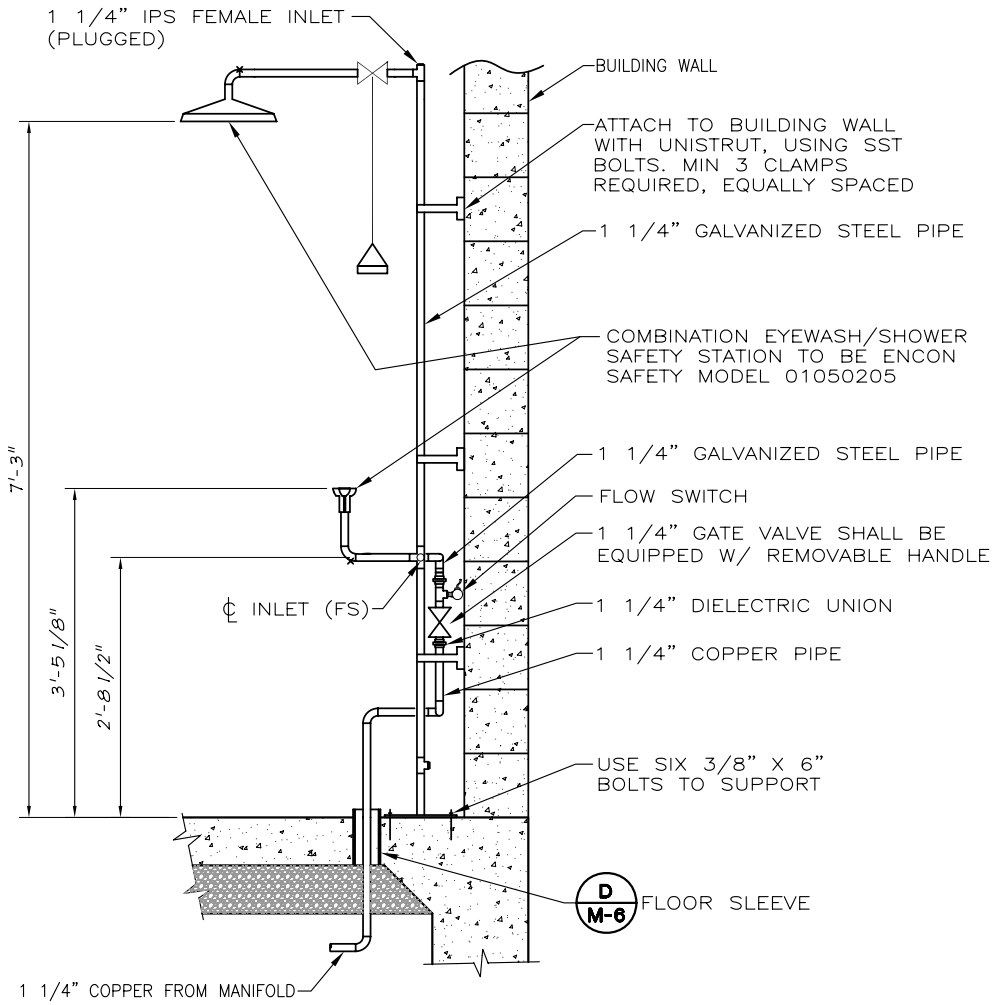

EYEWASH/SHOWER SAFETY STATION

N.T.S.

A M-1

SHELF TO BE BOLTED TO CONCRETE BLOCK WALL IN CHEMICAL ROOM BY "RED HEADS" OR OTHER APPROVED MEANS. USE FOUR 3/8" X 4" BOLTS. LOCATE AS SHOWN.

NOTE:
DRILL 1" HOLE & INSTALL 3" LONG STAINLESS CONDUIT & LOCKING NUTS (W/ELECTRICAL CONDUIT INSULATOR SLEEVE) FOR DISCHARGE & RETURN FLOW TUBING NEAR BACK OF SHELF

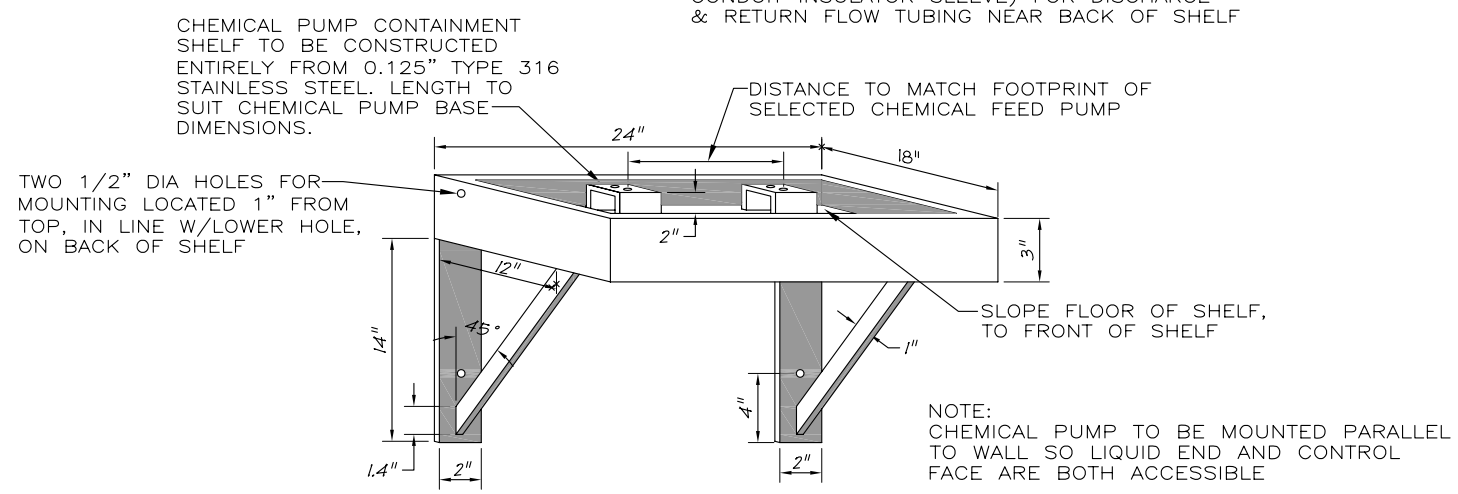

NOTE:
CHEMICAL PUMP TO BE MOUNTED PARALLEL TO WALL SO LIQUID END AND CONTROL FACE ARE BOTH ACCESSIBLE

CHEMICAL PUMP CONTAINMENT SHELF

N.T.S.

B M-1

DATE: November 2008

LINE IS 2 INCHES AT FULL SIZE (IF NOT 2"-SCALE ACCORDINGLY)

FILE M-9.dwg
DRAWN TAD
DESIGNED TAD
CHECKED WG
CHECKED

REGISTERED PROFESSIONAL ENGINEER JOSEPH C. SCALMANINI No. 28233 Exp. 12-31-2010 CIVIL STATE OF CALIFORNIA

LUHDORFF & SCALMANINI CONSULTING ENGINEERS

REVISIONS

ZONE	REV.	DESCRIPTION	BY	DATE	APP.

SACRAMENTO SUBURBAN WATER DIST.
VERNER AVENUE
WELL AND TREATMENT FACILITIES

SUBMITTED: _____ DATE: _____
SUBMITTAL APPROVED: _____ DATE: _____

CHEMICAL ROOM DETAILS

SCALE N.T.S.

DRAWING NUMBER M-9

SHEET NUMBER 45 OF 52

CAD FILE: G:/Projects/Sacramento Suburban W D/07-3-075/BID_SET/M-9.dwg CFG FILE: LSCE2500.PCP_MRG DATE: 11-25-08 11:43am

DESIGN

1. DESIGN AND DETAILS OF CONSTRUCTION SHALL COMPLY WITH THE 2007 EDITION OF THE CALIFORNIA BUILDING CODE AND THE ORDINANCES OF THE LOCAL BUILDING OFFICIAL.

LOADS

1. UNLESS OTHERWISE SHOWN OR NOTED THE UNIT LIVE LOADS FOR DESIGN ARE AS FOLLOWS:

	ROOF
L.L.	16 PSF
D.L.	11 PSF

85 MPH, EXPOSURE B WIND
SEISMIC DESIGN CATEGORY D

FOOTINGS

1. FOUNDATION SOIL IS NATIVE
2. FOOTINGS SHALL BE TAKEN DOWN TO FIRM UNDISTURBED BEARING. BOTTOMS OF FOOTINGS SHALL BE TAKEN DOWN A MINIMUM OF 18" BELOW EXISTING GRADE OR FINISHED GRADE WHICHEVER IS LOWER.
3. FOOTINGS ARE DESIGNED FOR A MAXIMUM DEAD PLUS LIVE SOIL PRESSURE OF 1,500 PSF
4. ELEVATIONS OF BOTTOMS OF FOOTINGS AS SHOWN ON THE PLANS REPRESENT THE ESTIMATED MINIMUM DEPTHS TO WHICH FOOTINGS MUST BE TAKEN.
5. BOTTOM OF FOOTINGS SHALL BE LEVEL. CHANGES IN ELEVATION TO BE MADE USING FOOTING STEPS AS SHOWN ON THIS SHEET.

CONCRETE

1. CONCRETE FOR STRUCTURAL SLABS & FOOTINGS SHALL BE DESIGNED AS FOLLOWS:

   STRENGTH: 3,000PSI @ 28 DAYS
   MAX. AGGREGATE SIZE: 1 1/2"

2. CONTRACTOR SHALL PROVIDE CONCRETE MIX DESIGN TO ENGINEER OF RECORD FOR REVIEW & APPROVAL PRIOR TO ORDERING. ALLOW FOR 5 BUSINESS DAYS FOR REVIEW. MIX DESIGN SHALL CONTAIN PAST HISTORY OF 30 BREAKS MIN. AS VERIFICATION OF DESIGN STRENGTH
3. REINFORCING STEEL BE INTERMEDIATE GRADE BILLET STEEL BARS CONFORMING TO A.S.T.M. DESIGNATION AS FOLLOWS:

   A615 GRADE 60

4. AT SPLICES IN HORIZONTAL WALL REINF. STEEL, LAP BARS 32 BAR DIAMETER (1'-0" MIN.) SPLICES IN ADJACENT BARS TO BE STAGGERED 3'-0" MIN. VERTICAL WALL BARS SHALL BE CONTINUOUS WITHOUT SPLICE. BARS MAY BE WIRED TOGETHER AT LAPS OR SPLICES.
5. ALL ANCHOR BOLTS, REGLETS, DOWELS, AND OTHER MISCELLANEOUS ITEMS TO BE CAST IN CONCRETE SHALL BE SECURED IN PLACE IN THE FORMS BEFORE POURING.

MASONRY

1. CONCRETE BLOCK SHALL BE f'm=1,500 PSI GRADE "N" HOLLOW LIGHT WEIGHT CONCRETE BLOCK COMFORMING TO A.S.T.M. DESIGNATION C-90 AND SHALL HAVE A MAX. LINEAR SHRINKAGE OF 0.06% FROM SATURATED TO OVEN DRY CONDITION.
2. MORTAR: C.B.C. TYPE "M" CONFORMING TO ASTM C270
   GROUT: 2000 PSI CONFORMING TO ASTM C476
3. USE OPEN END BLOCKS WHERE VERT. REINF. OCCURS, USE BOND BEAM UNITS WHERE HORIZ. REINF. STEEL OCCURS.
4. ALL CELLS CONTAINING VERTICAL AND HORIZONTAL REINFORCING SHALL BE FILLED SOLIDLY WITH GROUT AS A MINIMUM REQUIREMENT AS WELL AS ALL CELLS OF THE BOTTOM COURSE. SEE FOUNDATION PLAN FOR FURTHER GROUT REQUIREMENTS.
5. METAL LATH STRIPS OF EQUAL CELL WIDTH SHALL BE USED AS GROUT STOPS AT THE BOTTOMS OF COURSES TO BE FILLED FOR THE EMBEDMENT OF HORIZ. BARS UNLESS SOLID GROUTING IS SPECIFIED ELSEWHERE IN PLANS. PAPER OR OTHER MATERIAL PRODUCING A SLIP JOINT SHALL NOT BE USED.
6. VERT. REINF. STEEL SHALL EXTEND FULL HEIGHT OF WALL OR PARTITION WITHOUT SPLICE. VERT. REINF. STEEL SHALL BE ACCURATELY PLACED AND HELD IN POSITION IN THE CENTER OF THE WALL OR PARTITION
7. BLOCK SHALL BE LAID IN RUNNING BOND.
8. PROVIDE VERTICAL CONTROL JOINTS @ 15'-0" O.C. MAX. SEE DET. THIS SHEET FOR NOTES.

DEFERRED SUBMITTALS

ROOF WOOD TRUSS CALCULATIONS ARE TO BE SUBMITTED AS A DEFERRED SUBMITTAL SHOP DRAWING PACKAGE TO THE OWNER A MINIMUM OF 3 WEEKS PRIOR TO FABRICATION. SUBMITTED PACKAGE SHALL BE REVIEWED & APPROVED BY STRUCTURAL ENGINEER OF RECORD

TIMBER

1. STRUCTURAL FRAMING LUMBER–
   S4S DOUGLAS FIR GRADED IN ACCORDANCE WITH THE STANDRAD GRADING RULES NO. 16 OF THE W.C.L.I.B.
2. GRADES SHALL BE AS FOLLOWS EXCEPT AS NOTED ON DRAWINGS:

BEAMS AND STRINGERS– GREATER THAN 6" THICK	NO. 1
POST AND TIMBERS– GREATER THAN 6" THICK	NO. 1
JOIST AND PLANK– TO 4" THICK AND TO 14" WIDE	NO. 1
BLOCKING AND BRIDGING– 2" THICK	NO. 2
2 X 4 STUDS	STUD OR BETTER
2 X 6	2

3. STRUCTURAL PLYWOOD–COMPLY WITH U.S. PRODUCTS STANDARD PS 1-95
   ROOF PW SHALL BE 19/32" STRUCTURAL 1 OR C-D INTERIOR WITH EXTERIOR GLUE
4. ALL PW CALLED ON STRUCTURAL DRWGS IS STRUCTURAL PW. SEE PLYWOOD SHEATHING DETAIL THIS SHEET FOR TYPICAL LAYOUT & NAILING.
5. SILL PLATE SHALL BE PRESSURE TREATED DOUGLAS FIR
6. JOIST HANGERS AND MISC. HARDWARE CALLED FOR ON PLANS REFER TO STRONG TIE AS MANUFACTURED BY THE SIMPSON COMPANY. HARDWARE OF EQUAL STRENGTH MAY BE USED WITH ENGINEER'S APPROVAL.
7. BOLTS, LAG SCREWS, CARRIAGE BOLTS, AND WASHERS:
   A. ALL BOLTS FOR TIMBER CONNECTIONS SHALL BE MACHINE BOLTS EXCEPT AS NOTED. BOLT HOLES SHALL BE 1/16" LARGER THAN THE NOMINAL BOLT DIAMETER. ALL BOLTS MUST BE PULLED UP TIGHT ON INSTALLATION AND RETIGHTENED BEFORE CLOSING IN WITH FINISH MATERIAL.
   B. HOLES FOR LAG SCREWS SHALL BE BORED THE SAME DEPTH AND NOMINAL DIAMETER AS THE SHANK. HOLES FOR THE THREADED PORTION SHALL BE NO LARGER THAN THE ROOT DIAMETER OF THE THREADS.
8. A. PROVIDE SOLID BLOCKING BETWEEN RAFTERS OR JOISTS AT ALL SUPPORTS.
9. NAILING SHALL COMPLY WITH TABLE 2304.9.1 OF THE CBC ALL NAILS CALLED ON PLANS ARE COMMON OR GAL. BOX NAILS, UNLESS NOTED.
10. MEMBERS SHALL BE SUB-BORED WHEN NAILS TEND TO SPLIT THEM
11. APPLICATION OF WOOD PRESERVATIVES SHALL BE IN ACCORDANCE WITH MANUFACTURER'S RECOMMMENDATIONS.
12. MANUFACTURED JOISTS AND TRUSSES (DEFERRED APPROVAL)

    GANGNAIL TRUSS: SUPPLIED BY AN APPROVED METAL PLATE TRUSS MANUFACTURER. WOOD TRUSS SHALL CONFORM TO CBC STANDARD NO. 25-17 V. SUPPLY I.C.B.O. RESEARCH REPORT ON LIGHT METAL PLATES.

MISCELLANEOUS

1. DETAILS NOT SPECIFICALLY SHOWN CONFORM IN GENERAL WITH DETAILS OF SIMILAR CONSTRUCTION SHOWN ELSEWHERE ON PLANS.
2. FOR SIZE AND LOCATION OF OPENINGS, DUCTS AND PIPES SEE ARCHITECTURAL AND MECHANICAL DRAWINGS
3. NOTE REMOVED
4. NO CONDUITS OR PIPES SHALL BE EMBEDDED IN CONCRETE SLABS, BEAMS, GIRDERS, COLUMNS, ETC. UNLESS SPECIFICALLY APPROVED BY THE ARCHITECT OR ENGINEER.
5. WEDGE ANCHORS IN CONCRETE SHALL BE 'WS' RED HEAD BY PHILLIPS AND SHALL COMPLY WITH I.C.B.O. REPORT NO. 1372 OR EQUAL.
6. IN GENERAL, THE WORKING DETAILS WILL INDICATE DIMENSIONS POSITION, AND KIND OF CONSTRUCTION, AND THE SPECIFICATIONS, QUALITIES, AND METHODS. ANY WORK INDICATED ON THE WORKING DETAILS AND NOT MENTIONED ON THE SPECIFICATIONS OR VICE VERSA, SHALL BE FURNISHED AS THOUGH FULLY SET FORTH IN BOTH. WORK NOT PARTICULARLY DETAILED, MARKED OR SPECIFIED, SHALL BE THE SAME AS SIMILAR PARTS THAT ARE DETAILED, MARKED OR SPECIFIED. IF CONFLICTS OCCUR BETWEEN DRAWINGS AND SPECIFICATIONS, THE MOST EXPENSIVE MATERIALS OR METHODS WILL PREVAIL.
7. THE CONTRACTOR SHALL NOTIFY THE ARCHITECT OR STRUCTURAL ENGINEER WHERE A CONFLICT OR DISCREPANCY OCCURS BETWEEN THE STRUCTURAL DRWGS AND ANY OTHER PORTION OF THE CONTRACT DOCUMENTS OR EXISTING FIELD CONDITIONS. SUCH NOTIFICATION SHALL BE GIVEN IN DUE TIME SO AS NOT TO AFFECT THE CONSTRUCTION SCHEDULE. IN CASE OF A CONFLICT BETWEEN STRUCTURAL DRWGS AND SPECIFICATIONS THE THE MORE RESTRICTIVE CONDITION SHALL TAKE PRECEDENCE UNLESS WRITTEN APPROVAL HAS BEEN GIVEN FOR THE LEAST RESTRICTIVE. CONTRACTOR SHALL VERIFY ALL DIMENSIONS WITH "C" SHEETS PRIOR TO COMMENCING ANY WORK
8. DO NOT SCALE DRAWINGS. CONTACT THE ARCHITECT OR STRUCTURAL ENGINEER FOR ANY DIMENSIONS NOT SHOWN.
9. THESE DRAWINGS ARE NOT COMPLETE UNTIL REVIEWED AND ACCEPTED BY LOCAL BUILDING OFFICIALS AND SIGNED BY THE OWNER AND THE STRUCTRUAL ENGINEER.
10. CONTRACTOR TO VERIFY ALL DIMENSIONS.

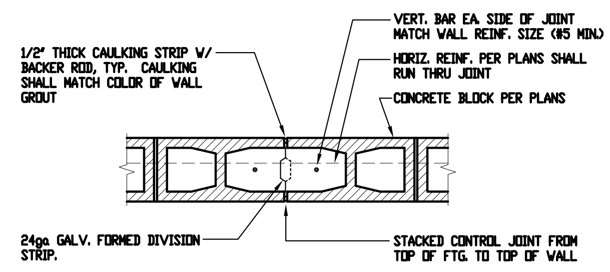

TYP. CMU CONTROL JOINT

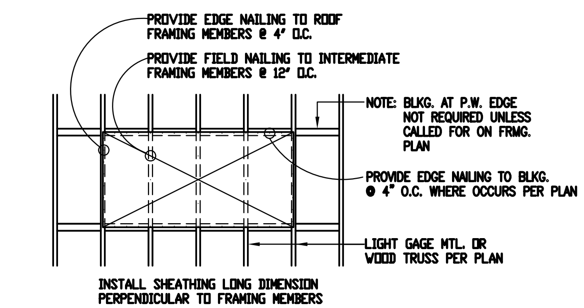

ROOF DIAPHRAGM NAILING:

LIGHT GAGE MTL. TRUSS FRMG.: PASLODE PNEUMATIC FASTNERS SPACED AS SHOWN ABOVE. FASTNERS TO BE 1-3/4" LONG x 0.120" DIA., ZINC PLATED W/ CHROMATE FINISH

WOOD TRUSS FRMG.: 8d COMMON NAILS SPACED AS SHOWN ABOVE

NOTE: MINIMUM PERMISSABLE NAILING SHOWN HERE. AREAS REQUIRED NAILING IN EXCESS OF THIS ARE SHOWN ON PLAN.

TYP PLYWOOD ROOF DIAPHRAGM

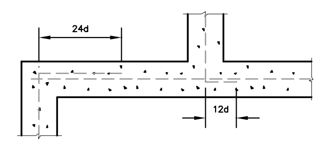

REINFORCING BAR SPLICES

ALL PIPES TO CLEAR SLEEVES BY 1/2" ALL AROUND CAULK WHEN NECESSARY.

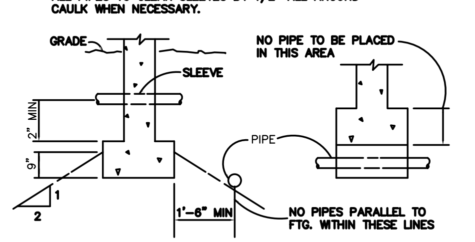

PIPES IN FOOTINGS

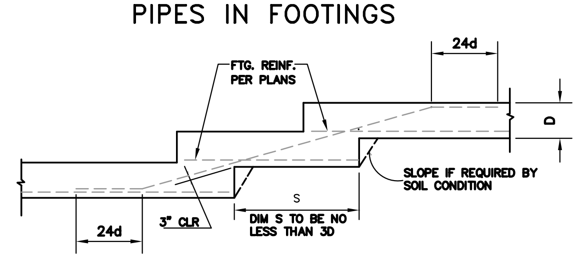

FOOTING STEP DETAILS

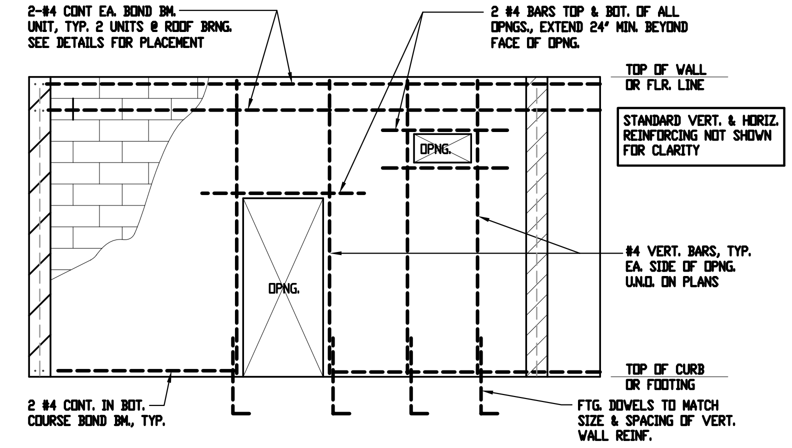

MASONRY DETAILS

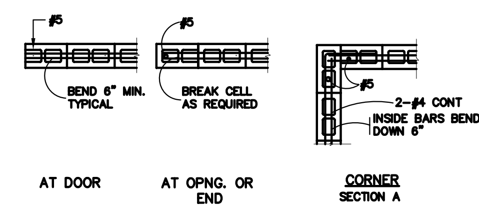

MASONRY DETAILS

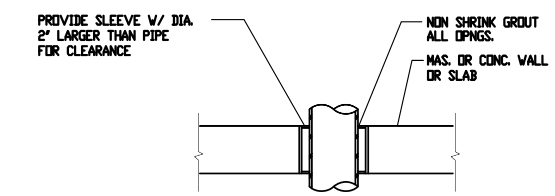

TYP. PIPE PENETRATION

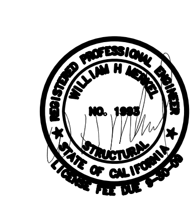

DATE: NOVEMBER 2008

LINE IS 2 INCHES AT FULL SIZE (IF NOT 2"-SCALE ACCORDINGLY)

FILE S-1.dwg
DRAWN PFP
DESIGNED PFP
CHECKED WHM
CHECKED

THIS DRAWING IS NOT VALID FOR CONSTRUCTION PURPOSES UNLESS IT BEARS THE SEAL AND SIGNATURE OF A DULY REGISTERED PROFESSIONAL

LUHDORFF & SCALMANINI CONSULTING ENGINEERS

REVISIONS					
ZONE	REV.	DESCRIPTION	BY	DATE	APP.

SACRAMENTO SUBURBAN WATER DIST.
VERNER AVENUE
WELL AND TREATMENT FACILITIES

SUBMITTED: DATE:
SUBMITTAL APPROVED: DATE:

GENERAL NOTES AND DETAILS

SCALE AS SHOWN
DRAWING NUMBER S-1
SHEET NUMBER 49 OF 52

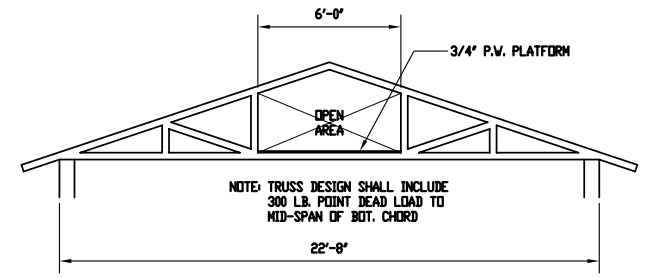

A - ROOF TRUSS PROFILE @ HVAC UNIT

SCALE: 1/4"=1'-0"

TYP. CONC. SLAB:

6" CONC. W/ #4 @ 16" O.C. EA. WAY, OVER 4" CRUSHED ROCK SLOPE TO SLAB TO DRAINS AS REQ'D. (1/8":12 MIN.)

WALL LEGEND

- 8" SOLID GROUTED CMU BLOCK W/ #4 VERT. BARS @ 24" O.C. & #4 HORIZ. BARS @ 24" O.C.
- 8" SOLID GROUTED CMU BLOCK W/ #5 VERT. BARS @ 16" O.C. & #4 HORIZ. BARS @ 24" O.C. SPECIAL INSPECTION PER SECT. 1701.5.7 C.B.C. FOR FIRST 6 COURSES

CONSTRUCTION OF WALL SHALL NOT COMMENCE UNTIL SPECIAL INSPECTOR IS ONSITE. INSPECTION SHALL BE PER TABLE 1704.5.3 OF 2007 C.B.C.

SHEET NOTES

1. 19/32" CDX OR OSB ROOF SHEATHING W/ 8d @ 6" O.C. EDGE, 12" O.C. FIELD NAILING.
2. FIELD LOCATE COLLECTOR TRUSS IN LINE WITH CMU WALL BEYOND. DESIGN FOR TRANSFER OF 3,000 LB LATERAL LOAD FROM TOP TO BOT. CHORD.
3. FIELD LOCATE COLLECTOR TRUSS ABOVE CMU WALL BELOW. DESIGN FOR TRANSFER OF 3,000 LB LATERAL LOAD FROM TOP TO BOT. CHORD.
4. DRAG TIE FROM COLLECTOR TRUSS TO 4x8 CMU NAILER, SEE DET. E/S3
5. TOP CHORD TRUSS CONN. PLATES SHALL BE CAPABLE OF TRANSFERING 2,500 LB MIN. TENSION OR COMPRESSION ACROSS MEMBER SPLICE
6. 3"x22" MIN. SCREENED ATTIC VENT BTWN. TRUSSES AT EAVE, TYP. AS SHOWN ON FRMG. PLAN
7. OPNG. FOR ATTIC RIDGE VENT. OMIT RIDGE BLKG. BTWN. TRUSSES AND NOTCH P.V. TO CREATE 5"x22" OPENING. CENTER OPENING ON RIDGE. LOCATE AS SHOWN ON PLAN.
8. HATCHED AREA INDICATES 6'-0" WIDE MECH. UNIT PLATFORM INSIDE ATTIC SPACE AND CENTERED ON TRUSS SPAN, SEE DET. "A" FOR TRUSS PROFILE REQUIRED.
9. 22-1/2" x 30" ATTIC ACCESS PANEL BTWN. TRUSS SPACING.

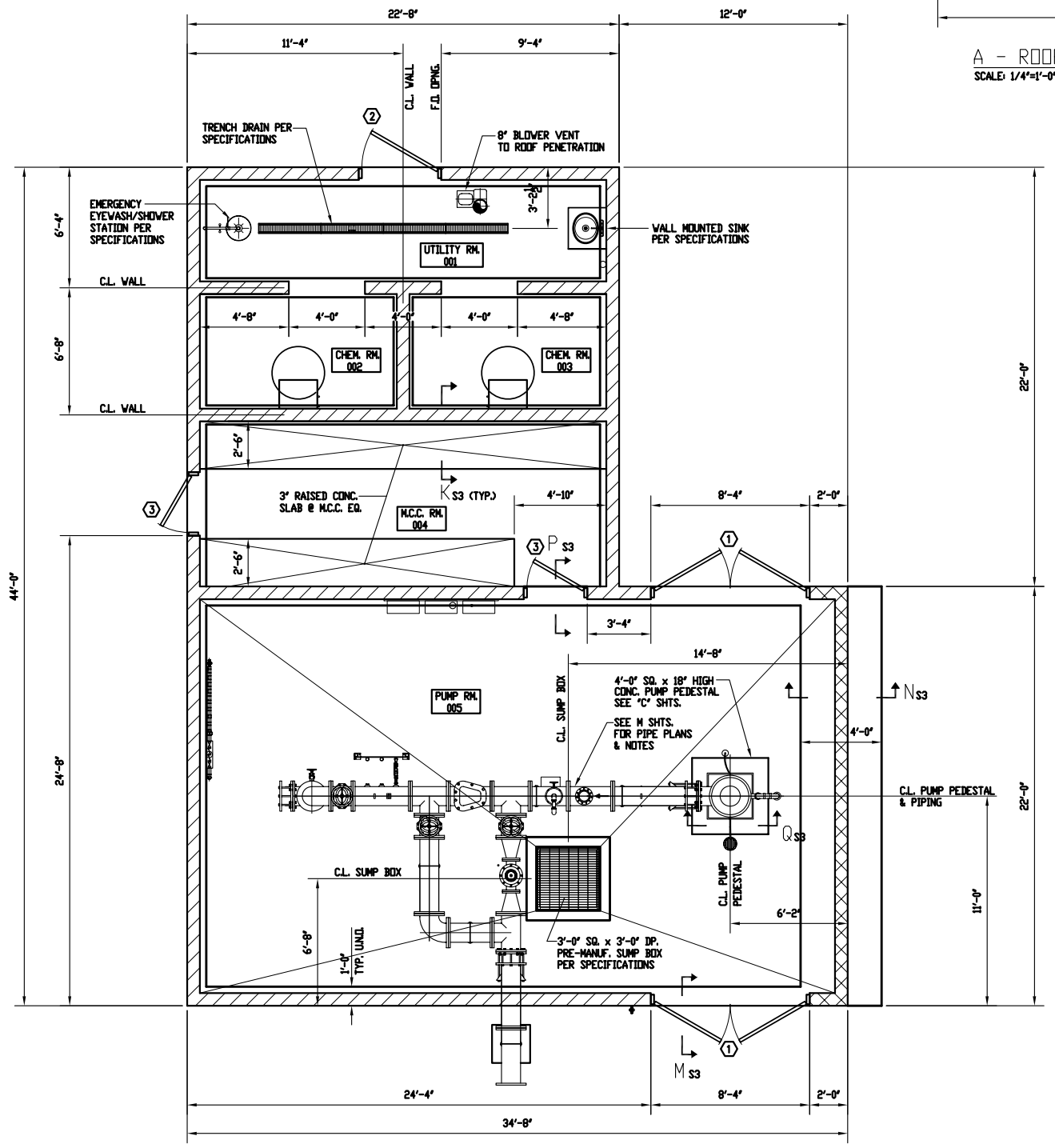

FOUNDATION/FLOOR PLAN

SCALE: 1/4"=1'-0"

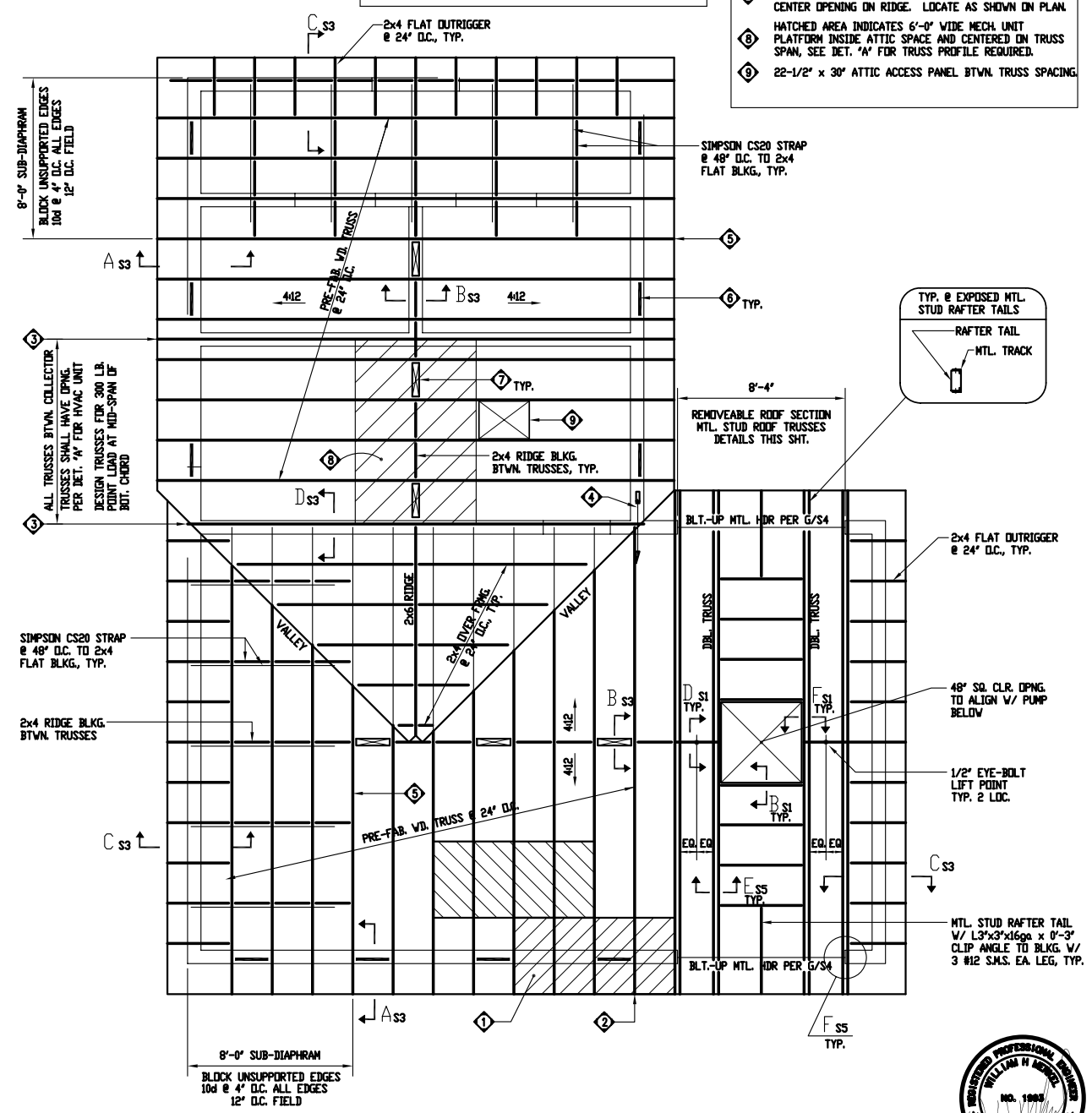

ROOF FRAMING PLAN

SCALE: 1/4"=1'-0"

REGISTERED PROFESSIONAL ENGINEER WILLIAM H REDDEL NO. 1983 STRUCTURAL STATE OF CALIFORNIA LICENSE EXP. DEC 31, 2009

DATE: NOVEMBER 2008	LINE IS 2 INCHES AT FULL SIZE (IF NOT 2"-SCALE ACCORDINGLY)	THIS DRAWING IS NOT VALID FOR CONSTRUCTION PURPOSES UNLESS IT BEARS THE SEAL AND SIGNATURE OF A DULY REGISTERED PROFESSIONAL	LUHDORFF & SCALMANINI CONSULTING ENGINEERS	REVISIONS	SACRAMENTO SUBURBAN WATER DIST. *VERNER AVENUE WELL AND TREATMENT FACILITIES*	FOUNDATION PLAN ROOF FRAMING PLAN AND NOTES	SCALE AS SHOWN
	FILE S-2.dwg			ZONE / REV. / DESCRIPTION / BY / DATE / APP.	SUBMITTED: DATE:		DRAWING NUMBER S-2
	DRAWN PFP				SUBMITTAL APPROVED: DATE:		SHEET NUMBER 50 OF 52
	DESIGNED PFP						
	CHECKED WHM						
	CHECKED						

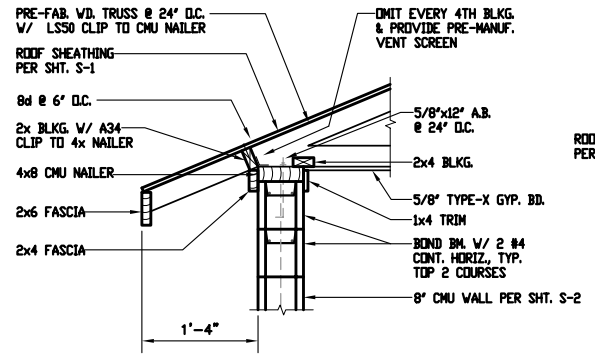

A 3/4"=1'-0"

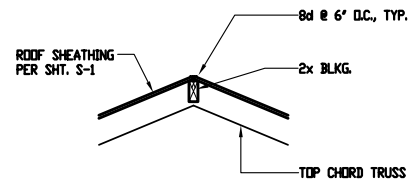

B 3/4"=1'-0"

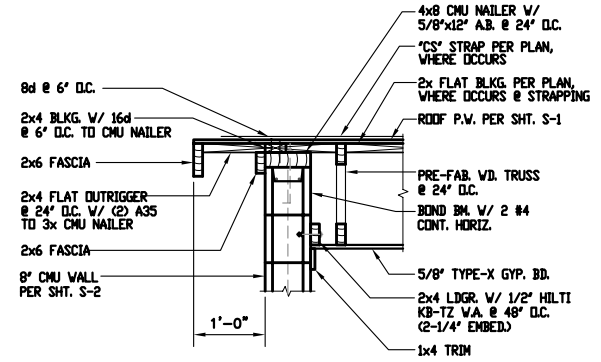

C 3/4"=1'-0"

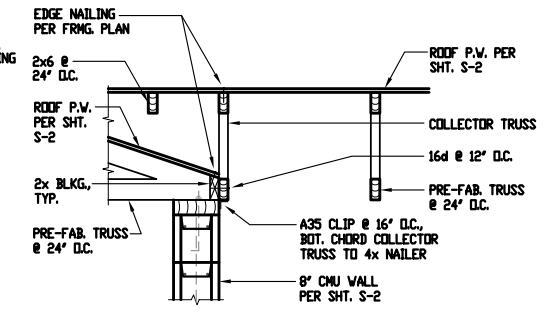

D 3/4"=1'-0"

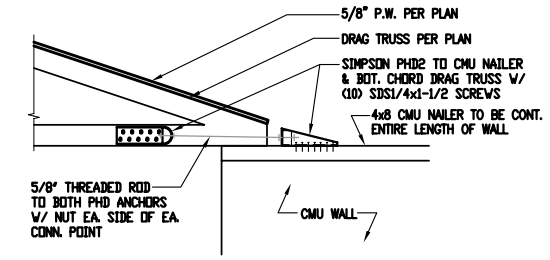

E 3/4"=1'-0"

F NOT USED

G NOT USED

H NOT USED

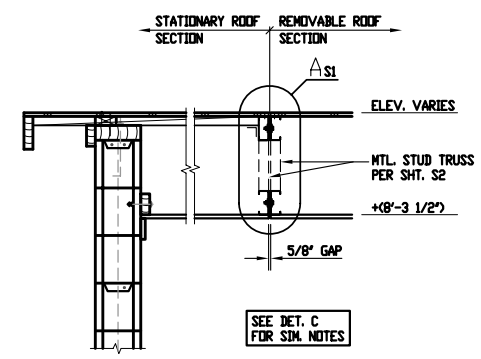

J 3/4"=1'-0"

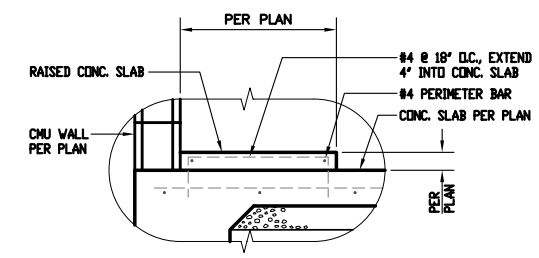

K 3/4"=1'-0"

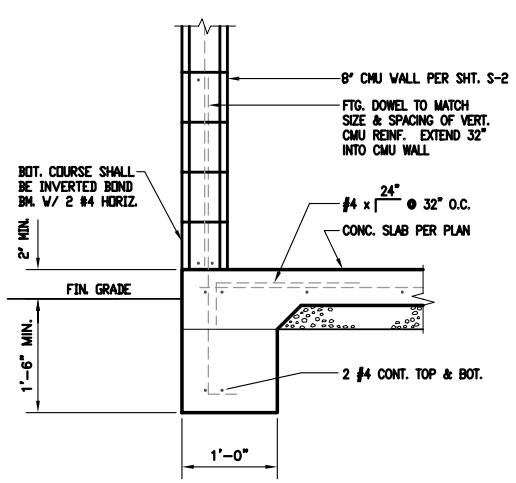

L 3/4"=1'-0"

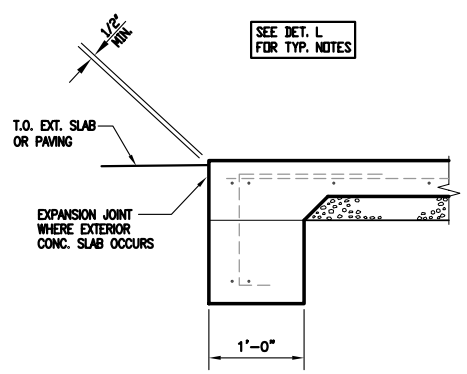

M 3/4"=1'-0"

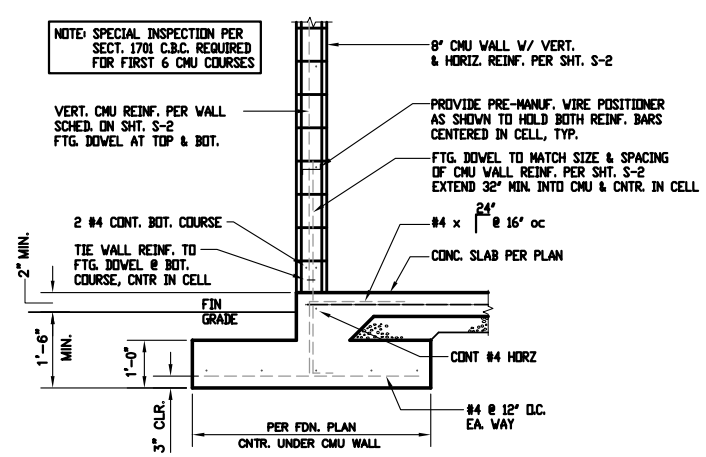

N 1/2"=1'-0"

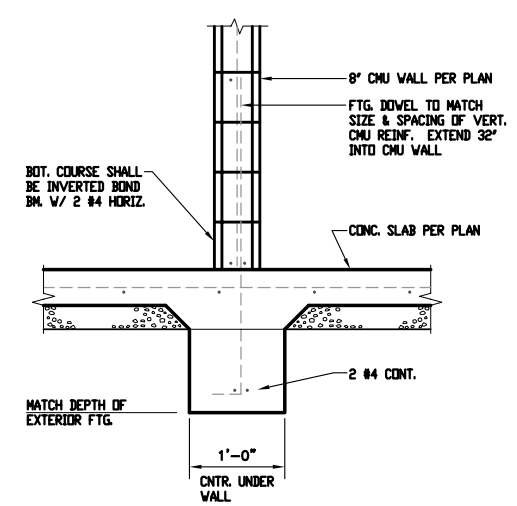

P 3/4"=1'-0"

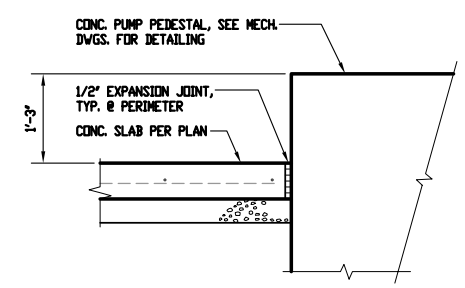

Q 3/4"=1'-0"

REGISTERED PROFESSIONAL ENGINEER WILLIAM H MERRILL NO. 1988 STRUCTURAL STATE OF CALIFORNIA LICENSE EXP. 6-30-09

DATE: NOVEMBER 2008

LINE IS 2 INCHES AT FULL SIZE (IF NOT 2"-SCALE ACCORDINGLY)

FILE S-3.dwg
DRAWN PFP
DESIGNED PFP
CHECKED WHM
CHECKED

THIS DRAWING IS NOT VALID FOR CONSTRUCTION PURPOSES UNLESS IT BEARS THE SEAL AND SIGNATURE OF A DULY REGISTERED PROFESSIONAL

LUHDORFF & SCALMANINI CONSULTING ENGINEERS

REVISIONS

ZONE	REV.	DESCRIPTION	BY	DATE	APP.

SACRAMENTO SUBURBAN WATER DIST.
VERNER AVENUE
WELL AND TREATMENT FACILITIES

SUBMITTED: _____ DATE: _____
SUBMITTAL APPROVED: _____ DATE: _____

DETAILS

SCALE: AS SHOWN

DRAWING NUMBER: S-3

SHEET NUMBER: 51 OF 52

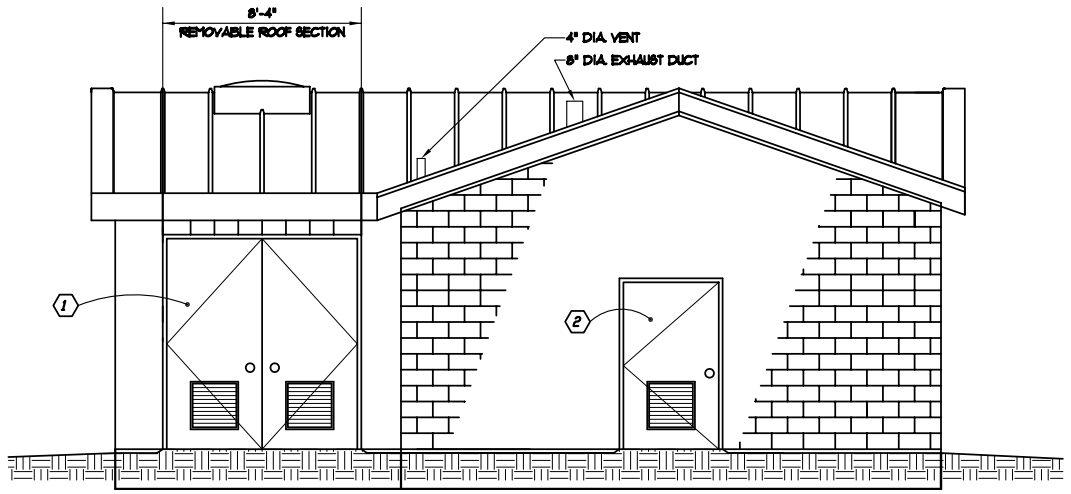

NORTH ELEVATION
SCALE: 1"=1'-0"

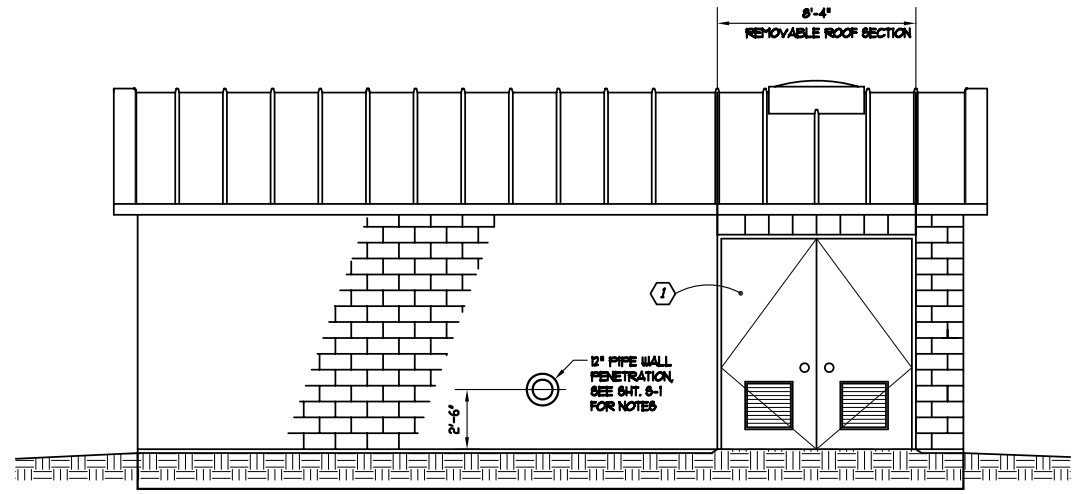

SOUTH ELEVATION
SCALE: 1"=1'-0"

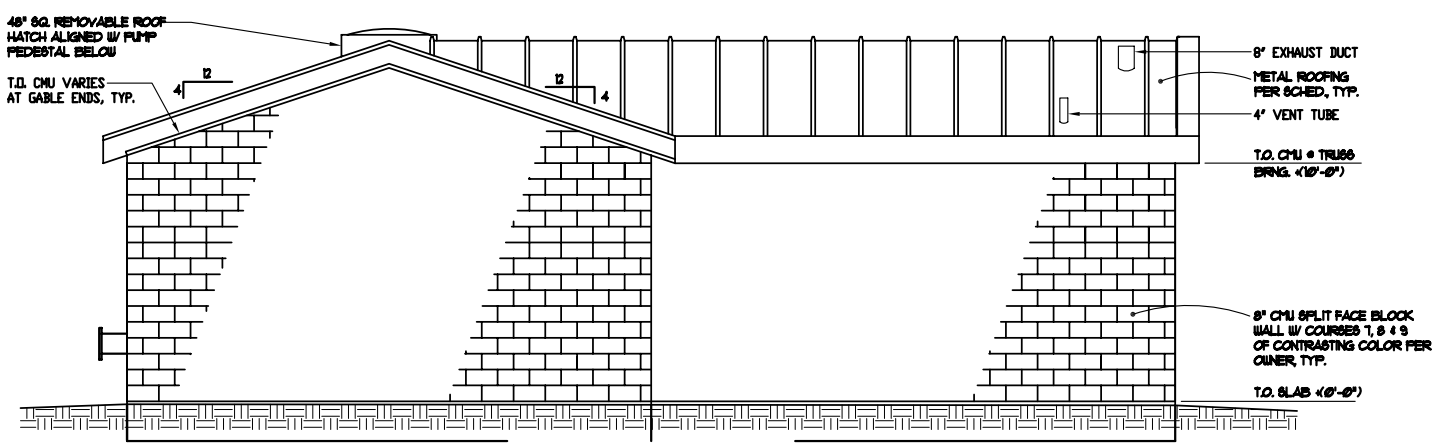

EAST ELEVATION
SCALE: 1"=1'-0"

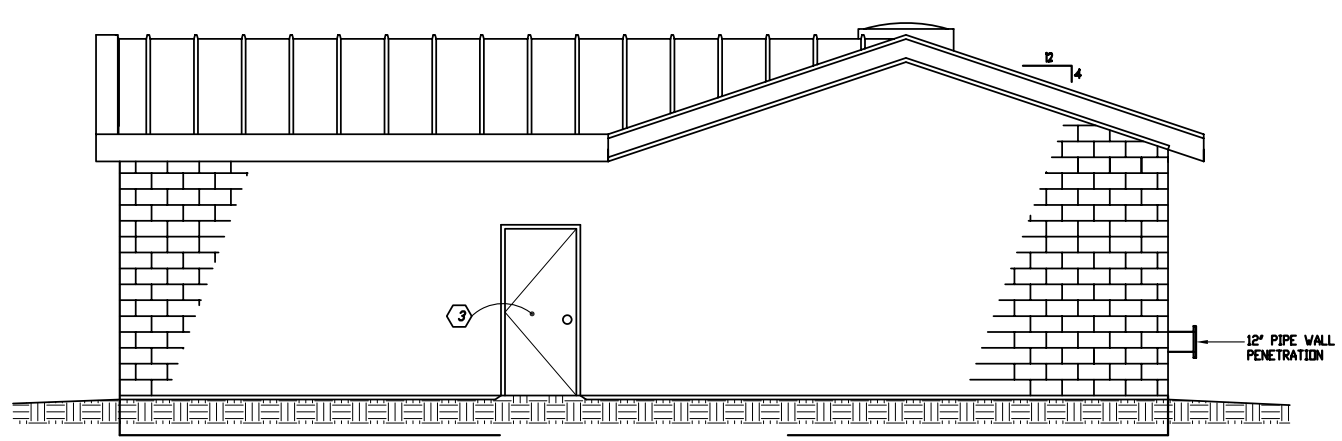

WEST ELEVATION
SCALE: 1"=1'-0"

DOOR SCHEDULE

DOOR NO.	DOORS: TYPE	WIDTH	HEIGHT	THICKNESS	MATERIAL	FINISH	SINGLE	PAIR	SOLID	HOLLOW	DOUBLE-ACTING	WINDOW	LOUVER	UNDERCUT	INSULATED	FRAMES: MATERIAL	FINISH	HEAD	JAMB	LABEL ASSEMBLY	HARDWARE NO.
1	C	4'-0"	9'-0"	1.75"	MTL.	PNT.		●		●			●		●	MTL.	PNT.				A
2	C	4'-0"	7'-0"	1.75"	MTL.	PNT.	●			●			●			MTL.	PNT.				A
3	D	3'-0"	7'-0"	1.75"	MTL.	PNT.	●			●						MTL.	PNT.				A

DOOR ELEVATIONS

DOOR TYPES

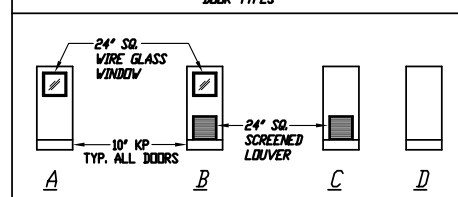

KP - MTL. KICKPLATE

HARDWARE TYPE A

HINGES: 1.5 PAIR 4.5x4.5 HAGER BB1279

LOCKSET: SCHLAGE "L" SERIES STYLE: TO BE SELECTED FINISH: 630

CLOSURE: VON DUPRIN OR EQ.

GASKETS: PEMCO S88W

STOP: GLYNN JOHNSON GJ FB-13

THRESHOLD: PEMCO OR EQ.

INTERIOR FINISH SCHEDULE

ROOM NO.	ROOM NAME	FLOOR	WALL MATERIALS N	S	E	W	WALL FINISH	CEILING
001	UTILITY RM.	1, 2	3	3	3	3	6	4, 6
002	CHEM. ROOM	1, 2	3	3	3	3	6	4, 6
003	CHEM. ROOM	1, 2	3	3	3	3	6	4, 6
004	M.C.C. ROOM	1, 2	3	3	3	3	5	4, 5
005	PUMP ROOM	1, 2	3	3	3	3	5	4, 5

MATERIAL & FINISH NOTES

1. BROOM FIN. CONC. SLAB
2. NON-SKID EPOXY COATING
3. CONC. MASONRY UNIT
4. 5/8" TYPE "X" GYP. BD. TAPE, TEXTURE & PAINT
5. SEMI-GLOSS EPOXY
6. SEMI-GLOSS EPOXY PAINT FOR CHEM. EXPOSURE
7. GLOSS EPOXY

EXTERIOR FINISH SCHEDULE

	MATERIAL & REMARKS	COLOR
ROOFING	24GA. DESIGN SPAN 17" METAL DECKING BY AEP SPAN	PER OWNER
WALLS	8"x8"x16" SPLIT FACE CONC. BLOCK MANUF. BY: CALSTONE COMPANY, SUNNYVALE, CA (408)984-8800	PER OWNER
TRIM	PAINT ALL MISC. METAL DOORS, DOOR JAMS, LOUVERS & ROOF VENTS TO MATCH ROOFING	MATCH ROOFING

NOTE: PROVIDE COLOR SAMPLES FOR OWNER APPROVAL PRIOR TO ORDERING MATERIALS

AEP SPAN, FONTANA, CA (909) 823-0401
(800) 272-2466

Occupancy-1 person 1 hour per day

REGISTERED PROFESSIONAL ENGINEER
WILLIAM H. MERRILL
NO. 1988
STRUCTURAL
STATE OF CALIFORNIA
LICENSE EXPIRES

DATE: NOVEMBER 2008

LINE IS 2 INCHES AT FULL SIZE (IF NOT 2"-SCALE ACCORDINGLY)

FILE S-4.dwg
DRAWN PFP
DESIGNED PFP
CHECKED WHM
CHECKED

THIS DRAWING IS NOT VALID FOR CONSTRUCTION PURPOSES UNLESS IT BEARS THE SEAL AND SIGNATURE OF A DULY REGISTERED PROFESSIONAL

LUHDORFF & SCALMANINI CONSULTING ENGINEERS

REVISIONS

ZONE	REV.	DESCRIPTION	BY	DATE	APP.

SACRAMENTO SUBURBAN WATER DIST.
VERNER AVENUE
WELL AND TREATMENT FACILITIES

SUBMITTED: DATE:
SUBMITTAL APPROVED: DATE:

EXTERIOR ELEVATIONS AND SCHEDULES

SCALE: AS SHOWN

DRAWING NUMBER: S-4

SHEET NUMBER: 52 OF 52

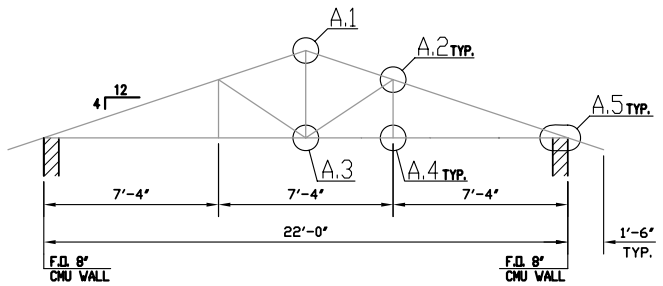

A METAL TRUSS PROFILE
1/4"=1'-0"

TRUSS MEMBER REQUIREMENTS	
TOP CHORD:	CONT. 400CS18 NON-PUNCHED MTL. STUD (TYP. OF 2)
BOT. CHORD:	CONT. 400CS18 NON-PUNCHED MTL. STUD
WEB:	400CS18 NON-PUNCHED MTL. STUD (TYP. OF 5)
CONN. PL.:	16ga SHEET MTL.
FASTENERS:	#12 SHEET METAL SCREWS (S.M.S.)
MTL. STUD MANUFACTURER: CEMCO	
OTHER MANUF. OF EQ. STRENGTH & SECTION PROPERTIES MAY BE SUBSTITUTED W/ WRITTEN APPROVAL OF ENGINEER OF RECORD STUD MATERIAL SHALL BE NON-PUNCHED.	

NOTE: POSITION TRUSS MEMBERS SUCH THAT PROJECTED MEMBER CENTERLINES INTERSECT @ COMMON PT.
S.M.S. TO BE INSTALLED AS SHOWN. SPACING SHALL BE 2" O.C., TYP. EA. DIRECTION U.N.O.
S.M.S. SHALL BE NO CLOSER THAN 1" FROM END OF CONN. PL. OR TRUSS MEMBER

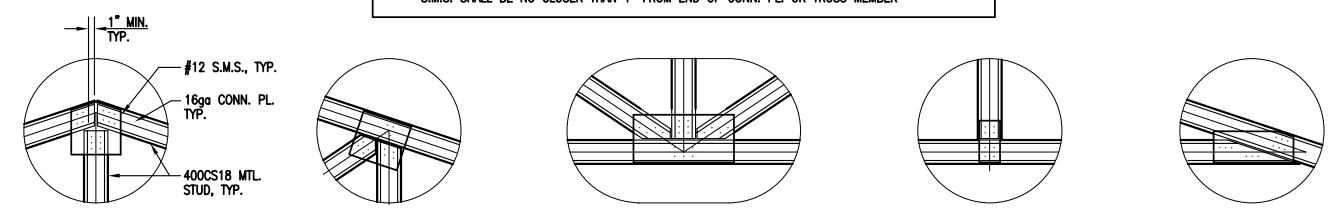

A.1 3/4"=1'-0"
A.2 3/4"=1'-0"
A.3 3/4"=1'-0"
A.4 3/4"=1'-0"
A.5 3/4"=1'-0"

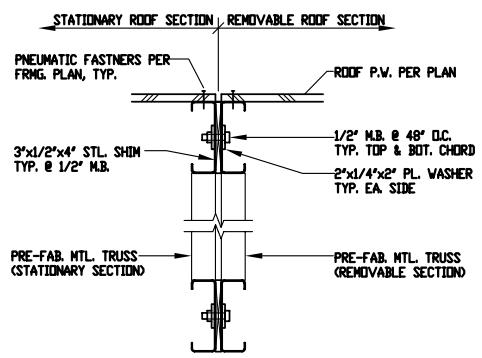

B TRUSS TRANSITION DETAIL
1-1/2"=1'-0"

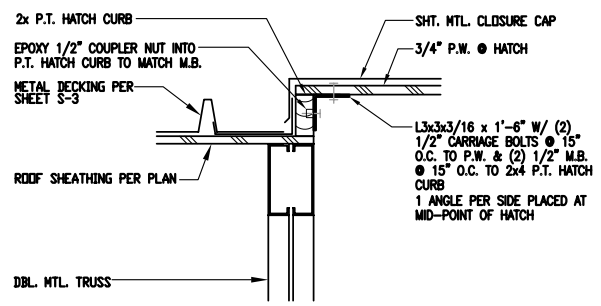

C TYP. CURB @ REMOVABLE HATCH
1-1/2"=1'-0"

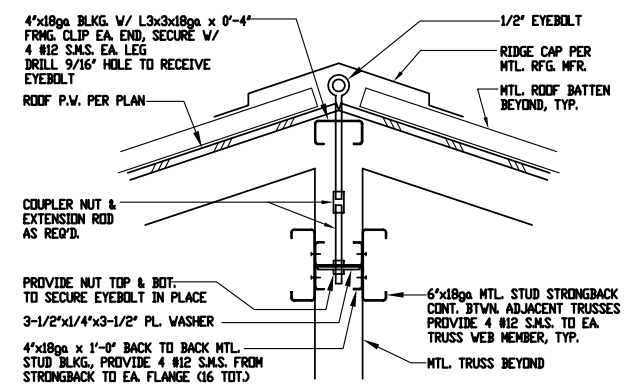

D REMOVABLE ROOF LIFT POINT
1-1/2"=1'-0"

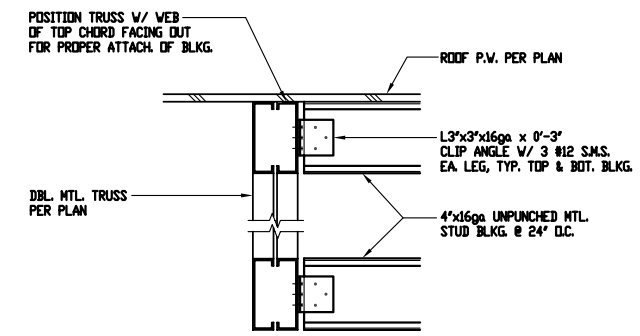

E REMOVABLE ROOF LIFT POINT
1-1/2"=1'-0"

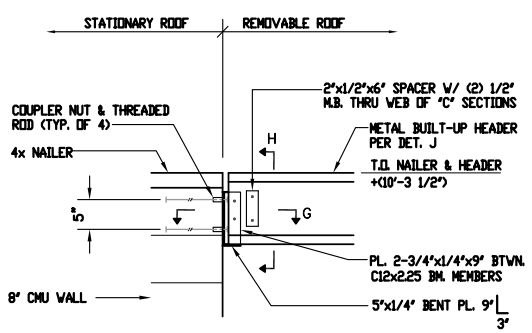

F MTL. HDR. ATTACHMENT
3/4"=1'-0"

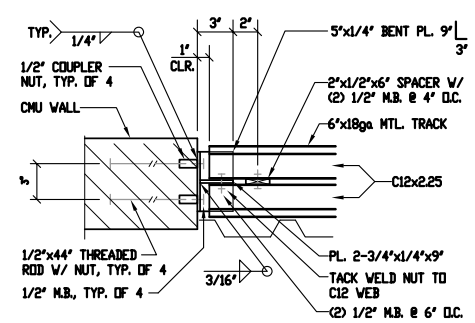

G MTL. HDR. ATTACHMENT
3/4"=1'-0"

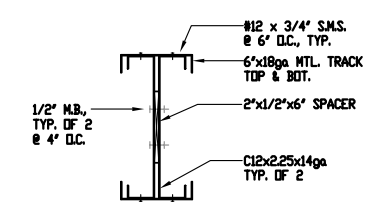

H MTL. HDR. SECTION
3/4"=1'-0"

J NOT USED

REGISTERED PROFESSIONAL ENGINEER WILLIAM H MOORE NO. 19927 STRUCTURAL STATE OF CALIFORNIA EXPIRES PER DOC 6-30-09

DATE: NOVEMBER 2008	LINE IS 2 INCHES AT FULL SIZE (IF NOT 2"-SCALE ACCORDINGLY)	THIS DRAWING IS NOT VALID FOR CONSTRUCTION PURPOSES UNLESS IT BEARS THE SEAL AND SIGNATURE OF A DULY REGISTERED PROFESSIONAL	LUHDORFF & SCALMANINI CONSULTING ENGINEERS	REVISIONS (ZONE, REV., DESCRIPTION, BY, DATE, APP.)	SACRAMENTO SUBURBAN WATER DIST. *VERNER AVENUE WELL AND TREATMENT FACILITIES*
	FILE S-5.dwg DRAWN PFP DESIGNED PFP CHECKED WHM CHECKED				SUBMITTED: DATE: SUBMITTAL APPROVED: DATE:

REMOVABLE ROOF DETAILS

SCALE: AS SHOWN
DRAWING NUMBER: S-5
SHEET NUMBER: 53 OF

TRUSS MEMBER REQUIREMENTS	
TOP CHORD:	CONT. 400CS18 NON-PUNCHED MTL. STUD (TYP. OF 2)
BOT. CHORD:	CONT. 400CS18 NON-PUNCHED MTL. STUD
WEB:	400CS18 NON-PUNCHED MTL. STUD (TYP. OF 5)
CONN. PL.:	16ga SHEET MTL.
FASTENERS:	#12 SHEET METAL SCREWS (S.M.S.)

MTL. STUD MANUFACTURER: CEMCO, CITY OF INDUSTRY, CA (818) 369-3564
OTHER MANUF. OF EQ. STRENGTH & SECTION PROPERTIES MAY BE SUBSTITUTED W/ WRITTEN APPROVAL OF ENGINEER OF RECORD: THICKNESS = 0.0451 in. MIN., AREA = 0.363 in.^2, Ix = 0.907 in.^4

FABRICATION GENERAL NOTES

1) POSITION TRUSS MEMBERS SUCH THAT PROJECTED MEMBER CENTERLINES INTERSECT AT COMMON POINT AS SHOWN IN DETAILS A1 THRU A5
2) SCREW PATTERNS SHALL BE CENTERED ON MEMBER CENTERLINES.
3) SCREW SPACINGS SHALL BE 3/4" EACH SIDE OF MEMBER CENTERLINE & 1-1/2" O.C. IN DIRECTION OF MEMBER LENGTH.
4) SCREW PATTERNS SHALL START 1-1/2" FROM END OF TRUSS MEMBER WHERE OCCURS & SHALL BE NO CLOSER THAN 1-1/2" TO EDGE OF CONNECTOR PLATE.
5) IF TRUSSES ARE FABRICATED BY TRUSS MANUF., CONTRACTOR SHALL FURNISH SHOP DRAWINGS TO ENGINEER OF RECORD FOR REVIEW & APPROVAL PRIOR TO FABRICATION.
IF TRUSSES ARE TO BE FABRICATED ON SITE, CONTRACTOR SHALL LAYOUT FIRST TRUSS FOR FABRICATION & MARK SCREW HOLE LOCATIONS AT ALL CONNECTION POINTS PRIOR TO FABRICATION. STRUCTURAL ENGINEER OR APPOINTED REPRESENTATIVE SHALL INSPECT FOR COMPLIANCE WITH PLANS AND ISSUE WRITTEN APPROVAL TO PROCEED PRIOR TO FABRICATION.

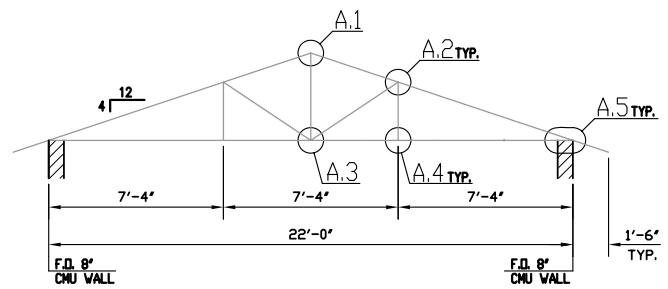

A METAL TRUSS PROFILE
1/4"=1'-0"

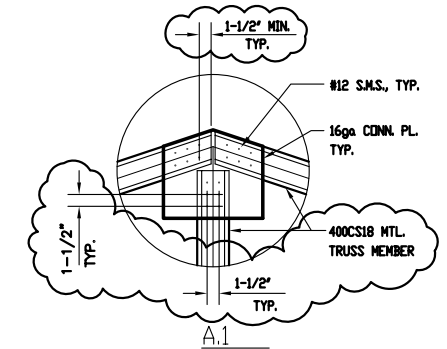

A.1
1"=1'-0"

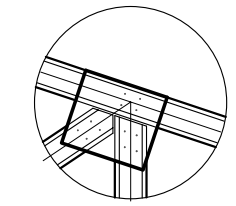

A.2
1"=1'-0"

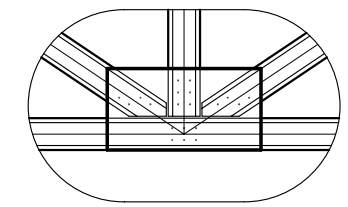

A.3
1"=1'-0"

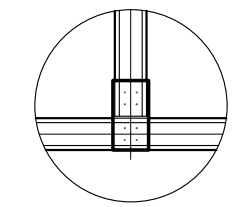

A.4
1"=1'-0"

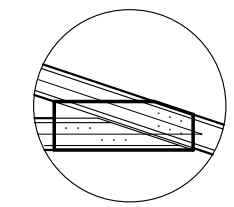

A.5
1"=1'-0"

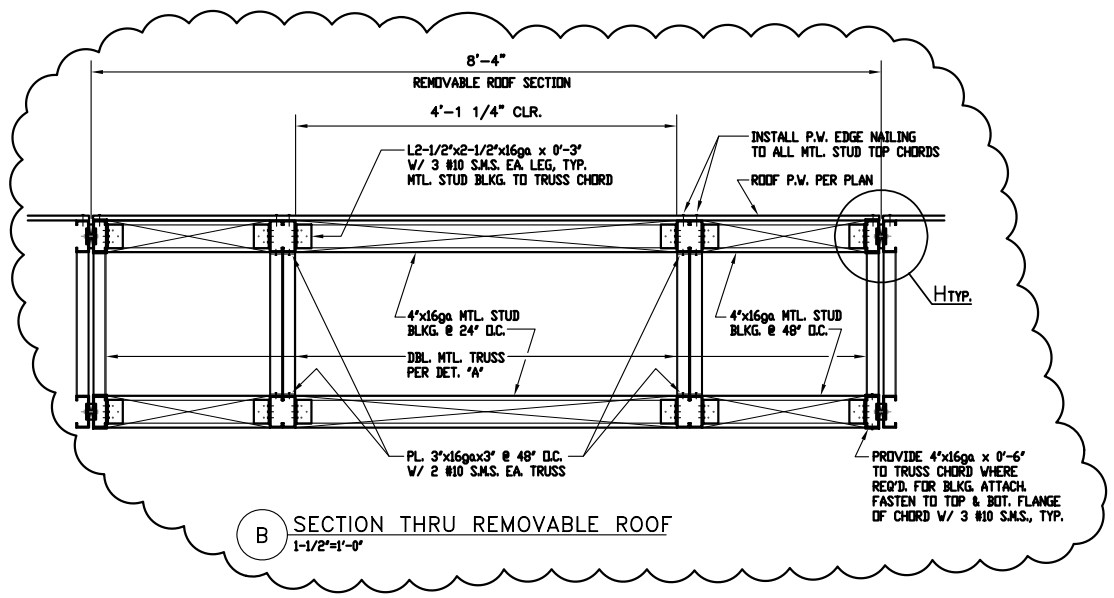

B SECTION THRU REMOVABLE ROOF
1-1/2"=1'-0"

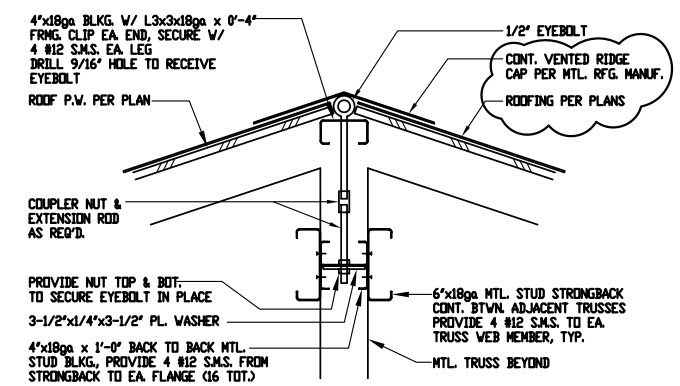

C REMOVABLE ROOF LIFT POINT
1-1/2"=1'-0"

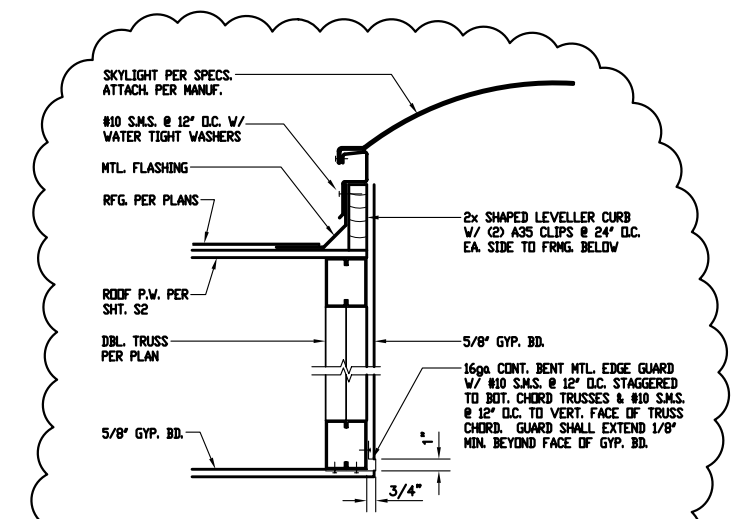

D TYP. CURB @ REMOVABLE ROOF HATCH
1-1/2"=1'-0"

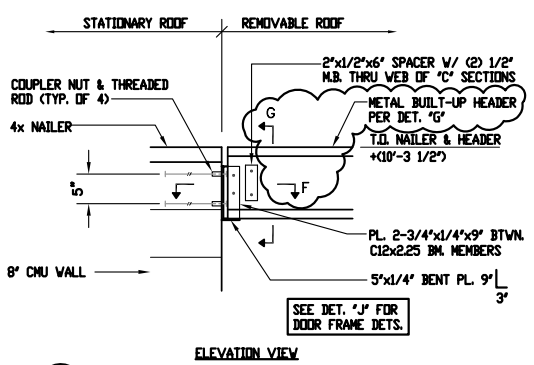

ELEVATION VIEW

E MTL. HDR. ATTACHMENT
3/4"=1'-0"

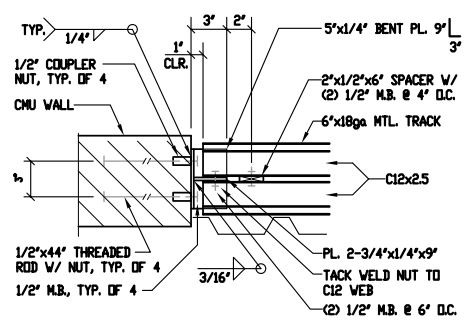

PLAN VIEW SECTION

F MTL. HDR. ATTACHMENT
1-1/2"=1'-0"

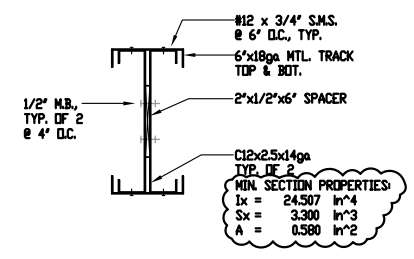

G MTL. HDR. SECTION
1-1/2"=1'-0"

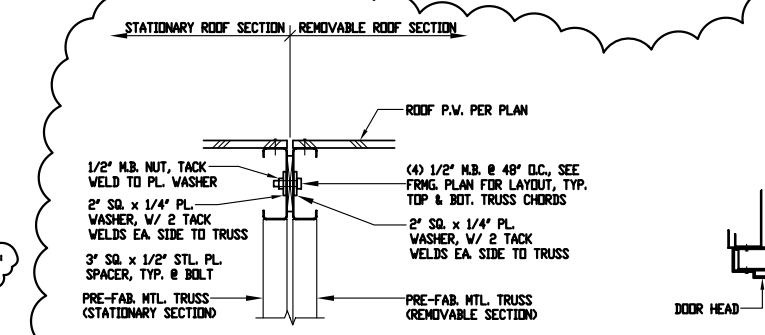

H SECT. @ REMOVABLE ROOF
1-1/2"=1'-0"

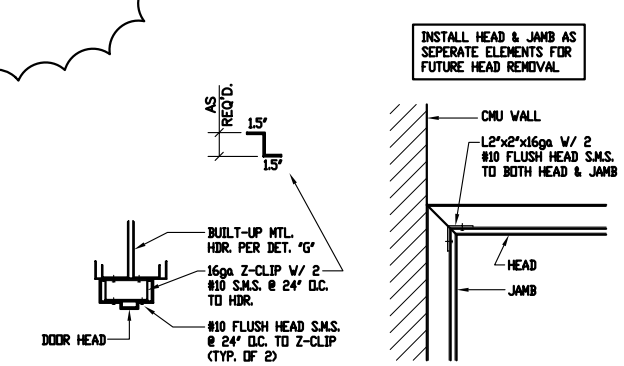

SECTION THRU HEAD

HEAD/JAMB CONNECTION

J SECT. @ REMOVABLE DOOR FRAME
1-1/2"=1'-0"

REGISTERED PROFESSIONAL ENGINEER WILLIAM N MEYER NO. 1983 STRUCTURAL STATE OF CALIFORNIA LICENSE EXP. DEC 6-30-09

DATE: NOVEMBER 2008	LINE IS 2 INCHES AT FULL SIZE (IF NOT 2"-SCALE ACCORDINGLY)	THIS DRAWING IS NOT VALID FOR CONSTRUCTION PURPOSES UNLESS IT BEARS THE SEAL AND SIGNATURE OF A DULY REGISTERED PROFESSIONAL	LUHDORFF & SCALMANINI CONSULTING ENGINEERS	SACRAMENTO SUBURBAN WATER DIST. *VERNER AVENUE WELL AND TREATMENT FACILITIES*	REMOVABLE ROOF DETAILS	SCALE AS SHOWN	
	FILE S-5.dwg DRAWN PFP DESIGNED PFP CHECKED WHM CHECKED			SUBMITTED: DATE: SUBMITTAL APPROVED: DATE:		DRAWING NUMBER S-5	
						SHEET NUMBER 53 OF 53	

REVISIONS

ZONE	REV.	DESCRIPTION	BY	DATE	APP.
	1	REVISED PER ADDENDUM 4	PP	1/27/09	

Underground Solutions Fusible PVC Folsom RCP Slipeline Budgetary Proposal and Technical Submittal

Fusible PVC™ Technical Submittal

Folsom RCP Slipline

Folsom, CA

underground SOLUTIONS®

13135 Danielson Street, Suite 201
Poway, CA 92064
Ph: (858) 679-9551
Fax: (858) 679-9555

www.UndergroundSolutions.com

TABLE OF CONTENTS

Forwarding Letter

Section 1: Technical Data

Section 2: Technical Specifications

Section 3: Project Profiles and Brochure

13135 Danielson Street, Suite 201
Poway, CA 92064
Tel: (858) 679-9551
Fax: (858) 679-9555
www.undergroundsolutions.com

5/14/2010

Mr. Marcus Yasutake
City of Folsom
50 Natoma St
Folsom, CA 95630

Subject: Folsom RCP Slipline

Dear Mr. Yasutake,

Thank you for the taking the time to discuss the use of Fusible PVC™ pipe for your project. To further confirm that you can count on Underground Solutions, Inc. (UGSI) to stand behind our product and technology, I would like to address the following items:

- The Fusible PVC™ Difference
- Fusible PVC™ QA/QC Process
- Fully Structural Lining Capability
- Field Fusion Qualification and Joint Data Logging
- Construction Management & Field Engineering Services
- Pipe Installation Experience
- UGSI Warranty
- Installation Support

UGSI goes to great lengths to ensure the pipe and fusion services we deliver on a project meet and exceed the expectations of our clients and end-users. The operating processes and procedures we employ for pipe and fusion services constitute the backbone of our company's offer and are unparalleled in the pipe industry. These processes allow UGSI and its clients to install Fusible PVC™ pipe with the same reliable and repeatable success project-after-project throughout the United Sates, Canada and Mexico on over 700 projects to date.

The Fusible PVC™ Difference

PVC pipe manufactured to meet AWWA C900/C905 requirements has enjoyed a very successful track record over the 30-40 years that it has been placed in service. The historical operating experience of PVC is the foundation for Fusible PVC™ pipe, because Fusible PVC™ pipe is manufactured to meet or exceed those same AWWA requirements. UGSI's Fusible C-900® and Fusible C-905® pipe products are AWWA C900/C905 pipe. The major differences between the Fusible PVC™ family of products and conventional bell & spigot PVC pipe material are: (1) virgin resin is used, (2) resin content is increased (Fusible PVC™ pipe has more resin and is therefore more plastic), (3) coarse fillers such as calcium carbonate are reduced in content, and (4) the content of other formulation ingredients are optimized within their allowable range limits to enhance thermal butt fusion. Fillers are used by conventional bell & spigot PVC pipe manufacturers to reduce the amount of resin content in order to reduce manufacturing cost of the pipe, while still meeting the applicable AWWA C900/C905 standards. Moreover, UGSI's quality control standards are world class, far exceeding those of other PVC pipe suppliers.

Prior to coming to the market with Fusible C-900®, Fusible C-905® and FPVC™ pipe in 2003, an exhaustive R&D program was conducted to develop the proper pipe formulation and the critical fusion parameters. These parameters allow UGSI to provide an integral fused joint that closely approximates the strength of the surrounding PVC pipe barrel. UGSI's R&D program provides the backbone to the pipe manufacturing and pipe fusion QA/QC processes which enable UGSI to provide a consistently reliable pipe, and a repeatable fusion process.

These processes, including data-logging of each fused joint, provide a detailed record of joint integrity that has resulted in a joint failure rate of approximately 0.05% or approximately one failure per 80,000 LF of installed pipe (approximately one in every 2,000 fused joints) – a record that compares very favorably with other installed pipe materials.

UGSI Pipe QA/QC Process

- UGSI requires that its pipe extrusion partners manufacture Fusible PVC™ pipe to AWWA C900/C905 requirements, to certify compliance based upon QA/QC testing, and to deliver Affidavits of Compliance with the AWWA standards.
- UGSI has obtained NSF-14 certification (outside certification agency) that Fusible PVC™ pipe meets AWWA C900/C905 requirements.

13135 Danielson Street, Suite 201
Poway, CA 92064
Tel: (858) 679-9551
Fax: (858) 679-9555
www.undergroundsolutions.com

- Every lot of Fusible PVC™ pipe is tested by an independent laboratory to verify critical material properties before the pipe is shipped to the jobsite from the manufacturer.
- Each fusion joint is data-logged – cataloguing the location on the pipeline, the fusion technician ID, and fusion parameters as reported on fusion data sheets and the electronic data-logger device. These are available for the owner's reference as required.

Test	Vendor Qualification	Required Vendor Testing	UGSI Lot Acceptance Testing	Fusion Joint QC Data
Fusion Tensile**	ASTM D638			
Pipe Tensile**	ASTM D638			
Pipe Dimensions*	**Per AWWA C900/C905**	**Per AWWA C900/C905**		
Pipe Burst*	**Per AWWA C900**	**Per AWWA C900**		
Flattening*	**Per AWWA C900/C905**	**Per AWWA C900/C905**	**Per AWWA C900/C905**	
Acetone Immersion*	**ASTM D2152**	**ASTM D2152**	**ASTM D2152**	
Hydrostatic Pressure Test*	**Per AWWA C900/C905**	**Per AWWA C900/C905**		
Impact Test**	ASTM D2241; ASTM D2444	ASTM D2241; ASTM D2444		
Heat Reversion**	ASTM F1057	ASTM F1057	ASTM F1057	
Ash/Inert Content	ASTM D2584	ASTM D2584		
(LOI)**		Per UGSI Request		
Joint Fusion Parameters**				Temperature, Pressure, Location
Licensed Operator**				Unique Operator ID

* Bold text identifies required testing per the AWWA C900/C905 standards for both bell & spigot PVC and Fusible PVC™.
** These are additional tests completed as part of the standard UGSI QA/QC process to ensure consistent and repeatable pipe quality for Fusible PVC™.

Fully Structural Lining Capability

As previously stated, UGSI's Fusible C-900® and Fusible C-905® pipe products are AWWA C900/C905 pipe. Fusible C-900®, Fusible C-905® and FPVC™ pipes use starting stock extruded from 100% virgin polyvinyl chloride (PVC) resin that has been compounded to provide physical and chemical properties that equal or exceed cell class 12454 as defined in ASTM D1784. As such, Fusible PVC™ is a fully structural system. The pressure rating of Fusible PVC™ pipe does not depend on the state of the host pipe, as many other lining systems do. The pressure class, buckling pressure, and all other technical data for Fusible PVC™ can be found in the following pages of this document.

Field Fusion Qualification and Joint Data Systems

Fusible PVC™ pipe can only be fused by UGSI's qualified fusion technicians or licensed contractors who have undergone UGSI's qualification and training program.

- Qualified fusion technicians are initially trained by Underground Solutions and are requalified annually.
- Initial three day training course covers material science, data logging systems and 2.5 days of on-machine fusion. There is a pass/fail system in place; not all class participants who receive training are deemed to be qualified to fuse Fusible PVC™.

13135 Danielson Street, Suite 201
Poway, CA 92064
Tel: (858) 679-9551
Fax: (858) 679-9555
www.undergroundsolutions.com

- Fusion equipment must meet minimum standards to be approved for Fusible PVC™ fusion.
- Data loggers set the machine operating parameters and record critical fusion data for each joint.
- Data loggers provide real time feedback on joint integrity during the fusion process.
- Data loggers provide an electronic record of the pipe system fusion for proof of joint integrity.
- Fusion conditions are logged by the technician and "as-built" joint records are developed for the owner as necessary.

Construction Management and Field Engineering Services

UGSI provides a variety of project assistance to its customers to ensure project success, including:

- Construction Management – Our Construction Manager, Mike Garrett, has extensive experience with direct bury and trenchless installation methods, and has prior experience with Fusible PVC™ pipe as a customer.
- Engineering Support – Our registered Professional Engineers provide design and installation guidance using UGSI-developed calculation tools for planning HDD, Sliplining, Pipe-bursting and Direct Bury projects. These tools have proven to reduce overall installation risk and construction costs.

Fusible PVC™ Pipe Installation Experience

UGSI offers cost effective innovation to the underground infrastructure market by lowering overall installed costs for the end-user. Since January, 2004, UGSI has:

- Installed > 2,000,000 LF of Fusible PVC™ pipe
- Completed > 50,000 field-fused joints
- Recorded > 1,000 project installations
- Completed > 2,000 separate HDD pull ins
- Completed the longest single, continuous HDD pulls of thermoplastic pipe recorded in the water and wastewater industry: 5,120 LF of 10" DR14, and 4,400 LF of 24" DR18 pipe.
- Implemented a Pipe and Fusion QA/QC program unparalleled in the industry.

Warranty

There are two components to the UGSI warranty: (1) the warranty for the pipe itself, which commences when the pipe is delivered to the job site, (2) the warranty for the workmanship of the fused joint – effective from the date of completion of the fusion joint services.

Installation Support

The stringent QA/QC process for pipe manufacturing, and training and qualification of fusion technicians are unique in the industry. Additionally, UGSI can have its local Construction Manager on-site to assist throughout the installation phases of the project to help ensure proper installation. This will include communication and review of the proper handling, installation, pressure testing, and tapping procedures for Fusible PVC™ pipe. There is no additional charge for the services of our Construction Manager.

Fusible PVC™ pipe is an extremely tough, reliable and resilient product. Nevertheless, following industry standards and best installation practices are important to ensure a successful installation. These include: (1) adherence to minimum bend radius considerations, (2) utilizing proper PVC cutter shells for tapping, and (3) installing hardware and appurtenances to the manufacturer recommendations.

UGSI prides itself on competing honestly and aggressively on the basis of the technical and economic merits of our Fusible PVC™ pipe products. We hope that you will agree based on the foregoing information.

Thank you for your consideration. If you have any questions, please contact me at the number shown below.

Sincerely,

Rob Craw

Regional Sales Manager
RCraw@UndergroundSolutions.com
Phone: (925) 577-7566
Fax: (858) 679-9555

Section 1

Technical Data

Pipe Technical Data Sheet

	24" DR 25 Fusible C-905®	24" DR 11 HDPE
Pipe Material	Fusible C-905®	PE-80
Total Pipe Length (LF)	19,000	19,000
Nominal Diameter (in)	24	24
Dimension Ratio	DR 25	DR 11
Series	DIPS	DIPS
Pressure Rating (PSIG)	165	160
Safety Factor	2.0	2.0
Outside Diameter (in)	25.80	25.80
Inside Diameter (in)	23.61	20.83
Cross Sectional Flow Area (in²)	437.9	340.7
Bend Radius (LF)	538	215
Tensile Strength (PSIG)	7,000	3,200
Safe Pulling Force (lbs)	224,800	207,400
Safe Pulling Stress (PSIG)	2,800	1,200
Relaxation Period (hrs)	0	24 - 48
Hydrostatic Design Basis (PSIG)	4,000	1,600
Critical Buckling Pressure (PSIG)	68	65
Connection to Host Pipe	Standard Mechanical Joint	Fused Flange/MJ Adapter
Material Weight (lbs/ft)	52.1	75.4
Total Pipe Weight (lbs)	989,710	1,432,163
Water Disinfectant Induced Oxidation	High Resistance	Low Resistance
Hydrocarbon Permeation	High Resistance	High Permeability

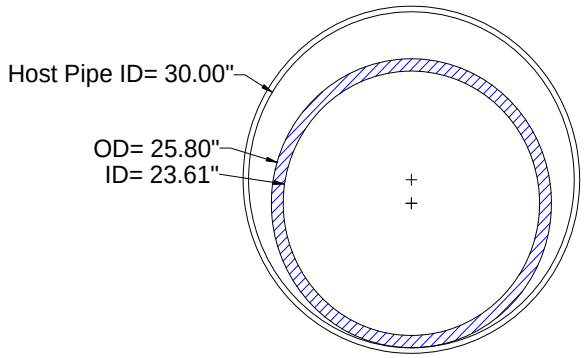

24" DR 25 Fusible C-905®

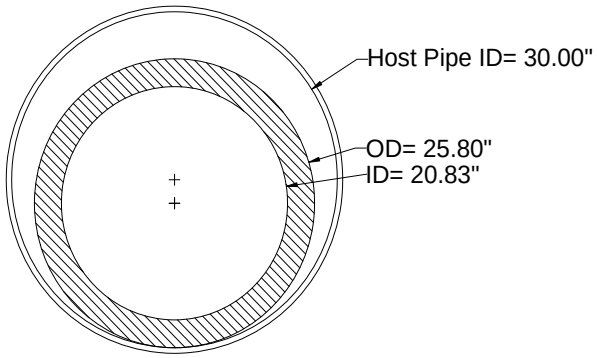

24" DR 11 HDPE

Fusible C-900® and Fusible C-905® pipe is now manufactured and marked to conform to the latest versions of the AWWA/ANSI C900 and C905 standards. The current version of AWWA/ANSI C900 increases the pressure classes for C900 PVC pipe to conform with pressure classes for C905 PVC pipe. During a transition period, UGSI may supply pipe manufactured and marked in accordance with either the 1997 or current versions of the appropriate standard, depending on pipe availability.

Frictional Loss Energy Analysis

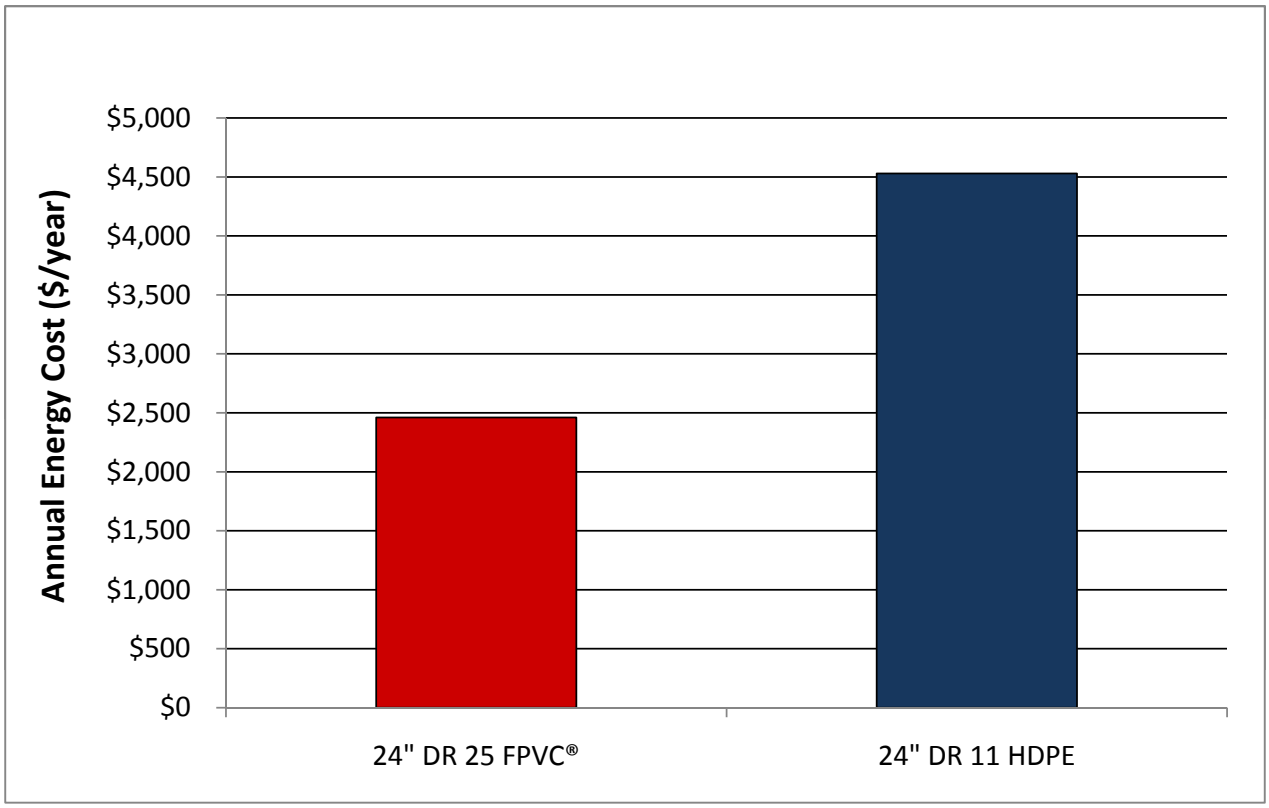

Pipe Description	Total Head Loss (ft of H_2O)	Pump Size (HP)	Energy Use (KWH/mo)	Energy Cost ($/mo)	Annual Energy Cost ($/yr)	Energy Cost Delta ($/yr)
24" DR 25 FPVC®	6	3	2,545	$205	$2,460	-
24" DR 11 HDPE	11	6	4,687	$378	$4,530	$2,070

Assumptions:

1. Flow rate of 3.168 million gallons per day (MGD).
2. Pump motor efficiency of 70%
3. Energy cost of $0.06/KWH.
4. Demand cost of $15/KW per month.
5. Pump operating time of 24 hours per day.
6. The annual energy costs shown are based on head loss only, and do not reflect actual pumping costs.

Note: This analysis is for comparison purposes only - the contractor, engineer and/or owner should perform their own analysis for the purposes of final engineering designs and bid submittals.

Net Present Value Comparison

	24" DR 25 FPVC®	24" DR 11 HDPE
Pipe Material	FPVC®	HDPE
Total Pipe Length (LF)	19,000	19,000
Nominal Diameter (in)	24	24
Dimension Ratio	DR 25 DIPS	DR 11 DIPS
Total Annual Energy Cost ($/yr)	$2,460	$4,530
Annual Energy Differential ($/yr)	**-**	**$2,070**
Net Present Value @ 50 year Life	**$117,157**	**$215,720**
Life Cycle Savings Using Fusible FPVC®	***$98,563***	**-**

Assumptions:

1. Head loss is based on a pipe length only, no fittings loss or elevation changes are taken into account.

2. Net present value based on 5% annual escilation in energy cost and 5% discount rate.

3. Energy savings based 50 year system life.

4. Pump capible of operating at required power level.

Frictional Loss Energy Analysis

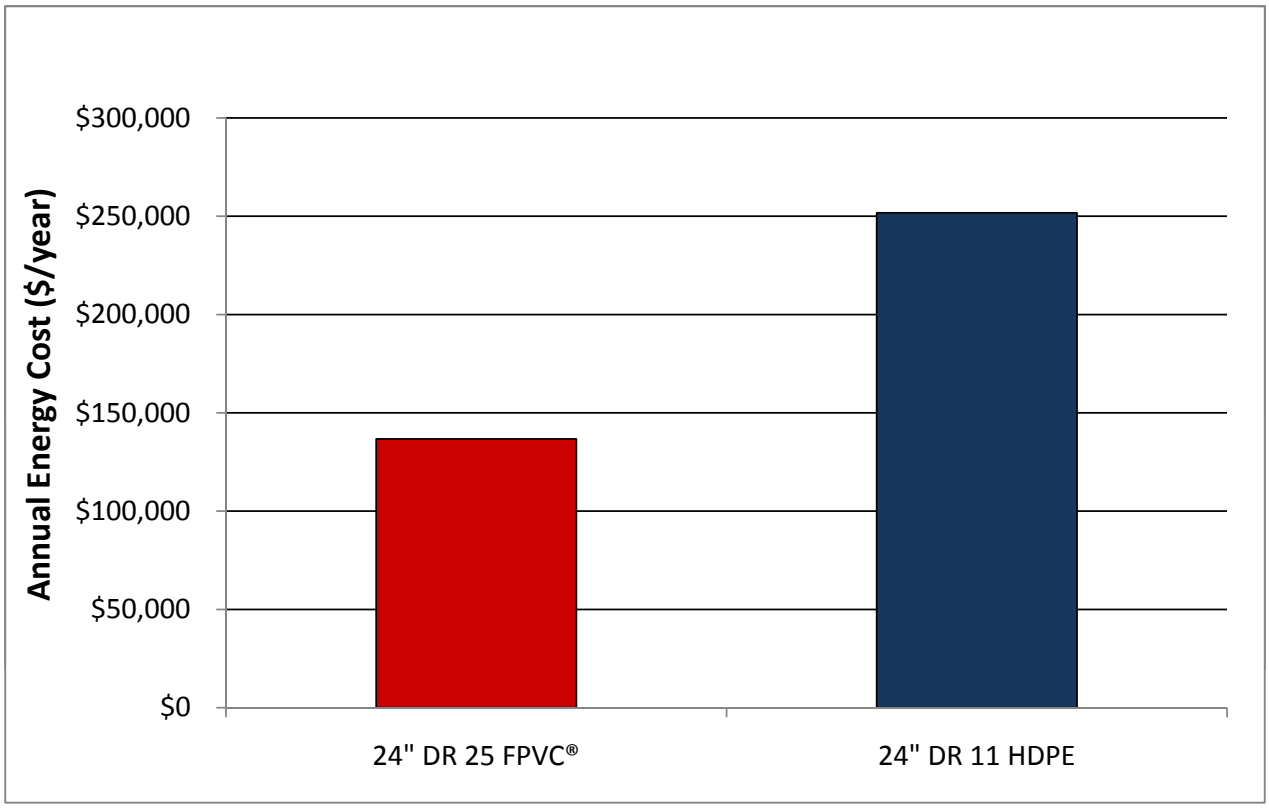

Pipe Description	Total Head Loss (ft of H_2O)	Pump Size (HP)	Energy Use (KWH/mo)	Energy Cost ($/mo)	Annual Energy Cost ($/yr)	Energy Cost Delta ($/yr)
24" DR 25 FPVC®	80	182	141,439	$11,393	$136,712	-
24" DR 11 HDPE	147	335	260,431	$20,977	$251,726	$115,015

Assumptions:

1. Flow rate of 12.96 million gallons per day (MGD).
2. Pump motor efficiency of 70%
3. Energy cost of $0.06/KWH.
4. Demand cost of $15/KW per month.
5. Pump operating time of 24 hours per day.
6. The annual energy costs shown are based on head loss only, and do not reflect actual pumping costs.

Note: This analysis is for comparison purposes only - the contractor, engineer and/or owner should perform their own analysis for the purposes of final engineering designs and bid submittals.

Net Present Value Comparison

	24" DR 25 FPVC®	24" DR 11 HDPE
Pipe Material	FPVC®	HDPE
Total Pipe Length (LF)	19,000	19,000
Nominal Diameter (in)	24	24
Dimension Ratio	DR 25 DIPS	DR 11 DIPS
Total Annual Energy Cost ($/yr)	$136,712	$251,726
Annual Energy Differential ($/yr)	**-**	**$115,015**
Net Present Value @ 50 year Life	**$6,510,079**	**$11,986,966**
Life Cycle Savings Using Fusible FPVC®	***$5,476,887***	**-**

Assumptions:

1. Head loss is based on a pipe length only, no fittings loss or elevation changes are taken into account.

2. Net present value based on 5% annual escilation in energy cost and 5% discount rate.

3. Energy savings based 50 year system life.

4. Pump capible of operating at required power level.

Typical Connection Details

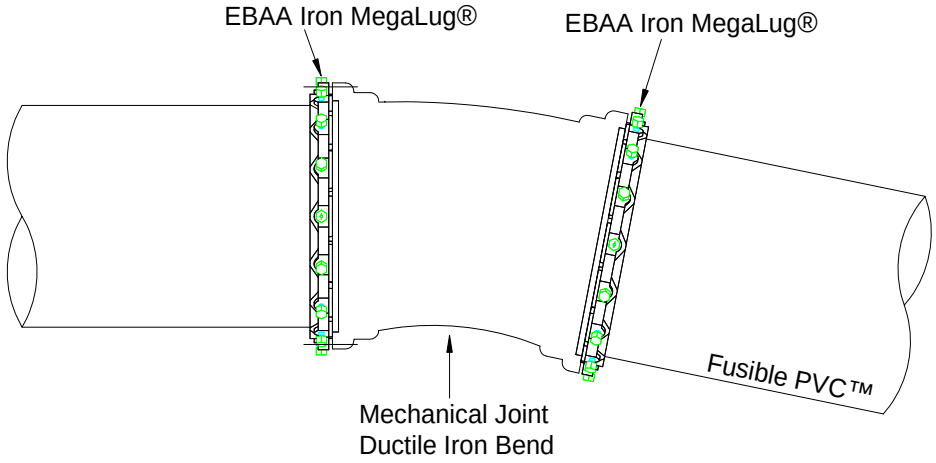

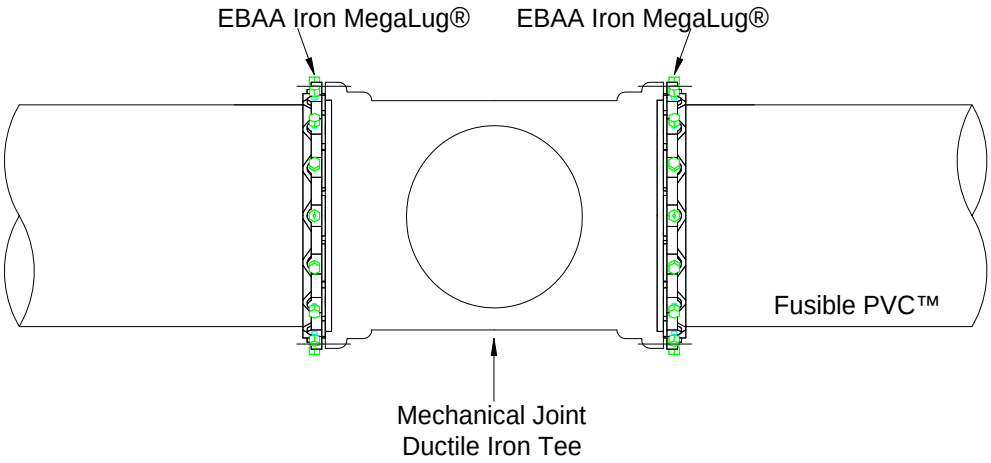

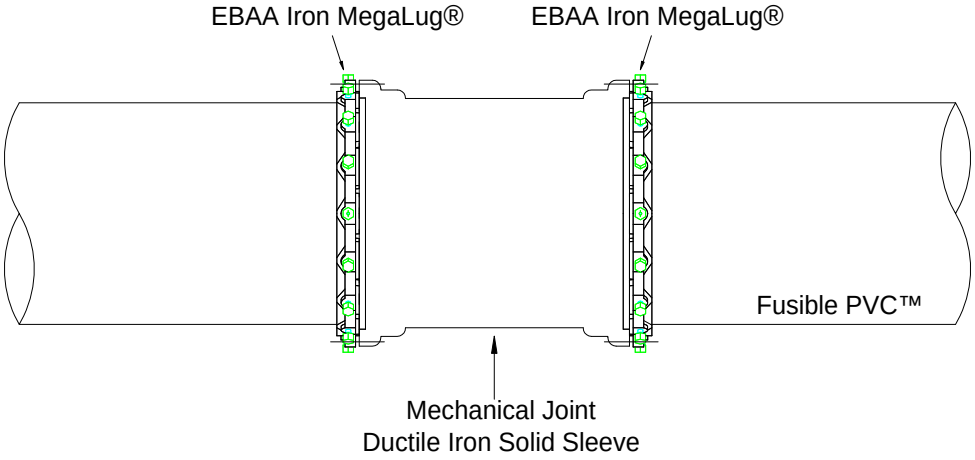

Note: All costs are estimates. This analysis is for comparison purposes only - the contractor, engineer and/or owner should perform their own analysis for the purposes of final engineering designs and bid submittals.

Section 2

Technical Specifications

SECTION 02600

FUSIBLE POLYVINYLCHLORIDE PIPE FOR INSTALLATION BY SLIPLINING

PART 1 –GENERAL

1.01 DESCRIPTION

A SCOPE

1. This section specifies fusible polyvinylchloride pipe, including standards for dimensionality, testing, quality, acceptable fusion practice, safe handling, storage and installation of the pipe by sliplining.

B REQUIREMENTS:

1. Contractor shall provide fusible polyvinylchloride pipe conforming to all standards and procedures, and meeting all testing and material properties as described in this specification for installation by sliplining.
2. Contractor shall be responsible for all installation processes and procedures associated with the installation by sliplining in accordance with this specification.

C PIPE DESCRIPTION

1. Pipe Supplier shall furnish fusible polyvinylchloride pipe conforming to all standards and procedures, and meeting all testing and material properties as described in this specification.
2. Pipe shall conform to the following dimensionality and general characteristics table:

Pipe Description	Nominal Diameter (in.)	DR	Color	Pressure Class (psi)	Required Inner Diameter (in.)
Potable Water	**24”**	**25**	**Blue**	**165**	**23.61**

1.02 QUALITY ASSURANCE

A REFERENCES:

1. This section contains references to the following documents. They are a part of this section as specified and modified. Where a referenced document contains references to other standards, those other standards are included as references under this section as if referenced directly. In the event of a conflict between the requirements of this section and those of the listed documents, the requirements of this section shall prevail.
2. Unless otherwise specified, references to documents shall mean the documents in effect at the time of design, bid, or construction, whichever is earliest. If referenced documents have been discontinued by the issuing organization, references to those documents shall mean the replacement documents issued or

otherwise identified by that organization or, if there are no replacement documents, the last version of the document before it was discontinued.

3. Where document dates are given in the following listing, references to those documents shall mean the specific document version associated with that date, regardless of whether the document has been superseded by a version with a later date, discontinued or replaced.

Reference	Title
ANSI/AWWA C110/A21.10	American National Standard for Ductile-Iron and Gray-Iron Fittings, 3-inch through 48-inch, for Water and Other Liquids
ANSI/AWWA C111/A21.11	American National Standard for Rubber-Gasket Joints for Ductile-Iron Pressure Pipe and Fittings
AWWA C605	Standard for Underground Installation of Polyvinyl Chloride (PVC) Pressure Pipe and Fittings for Water
AWWA C651	Standard for Disinfecting Water Mains
AWWA C900	Standard for Polyvinyl Chloride (PVC) Pressure Pipe and Fabricated Fittings, 4 in. through 12 in. (100mm Through 300mm), for Water Distribution
AWWA C905	Standard for Polyvinyl Chloride (PVC Pressure Pipe and Fabricated Fittings, 14 in. through 48 in. (350mm Through 1200mm), for Water Distribution and Transmission
AWWA M23	AWWA Manual of Supply Practices PVC Pipe—Design and Installation, Second Edition
ASTM C923	Standard Specification for Resilient Connectors Between Reinforced Concrete Manhole Structures, Pipes and Laterals
ASTM D1784	Rigid Poly (Vinyl Chloride) (PVC) Compounds and Chlorinated Poly (Vinyl Chloride) (CPVC) Compounds
ASTM D1785	Poly (Vinyl Chloride) (PVC) Plastic Pipe, Schedules 40, 80, and 120
ASTM D2152	Test Method for Degree of Fusion of Extruded Poly(Vinyl Chloride) (PVC) Pipe and Molded Fittings by Acetone Immersion
ASTM D2241	Poly (Vinyl Chloride) (PVC) Plastic Pipe (SDR-PR)
ASTM D2665	Poly (Vinyl Chloride) (PVC) Plastic Drain, Waste, and Vent Pipe and Fittings
ASTM D3034	Standard Specification for Type PSM Poly(Vinyl Chloride) (PVC) Sewer Pipe and Fittings
ASTM F477	Elastomeric Seals (Gaskets) for Joining Plastic Pipe
ASTM F679	Standard Specification for Poly(Vinyl Chloride) (PVC) Large Diameter Plastic Gravity Sewer Pipe and Fittings
ASTM F1057	Standard Practice for Estimating the Quality of Extruded Poly (Vinyl Chloride) (PVC) Pipe by the Heat Reversion Technique
ASTM F1417	Standard Test Method for Installation Acceptance of Plastic Gravity Sewer Lines Using Low-Pressure Air
UNI-B-6	Recommended Practice for Low-Pressure Air Testing of Installed Sewer Pipe
UNI-PUB-08	Tapping Guide for PVC Pressure Pipe

Reference	Title
NSF-14	Plastics Piping System Components and Related Materials
NSF-61	Drinking Water System Components--Health Effects
PPI TR-2	PVC Range Composition Listing of Qualified Ingredients

B MANUFACTURER REQUIREMENTS

1. All piping shall be made from PVC compound conforming to cell classification 12454 per ASTM D1784.

C FUSION TECHNICIAN REQUIREMENTS

1. Fusion Technician shall be fully qualified by the pipe supplier to install fusible polyvinylchloride pipe of the type(s) and size(s) being used. Qualification shall be current as of the actual date of fusion performance on the project.

D SPECIFIED PIPE SUPPLIERS

1. Fusible polyvinylchloride pipe shall be used as manufactured under the trade names Fusible C-900®, Fusible C-905®, and FPVC®, for Underground Solutions, Inc., Poway, CA, (858) 679-9551. Fusion process shall be as patented by Underground Solutions, Inc., Poway, CA, Patent No. 6,982,051. Owner and engineer are aware of no other supplier of fusible polyvinylchloride pipe that is an equal to this specified pipe supplier and products.

E WARRANTY

1. The pipe shall be warranted for one year per the pipe supplier's standard terms.
2. In addition to the standard pipe warranty, the fusion services shall be warranted for one year per the fusion service provider's standard terms.

F PRE-CONSTRUCTION SUBMITTALS

1. The following PRODUCT DATA is required from the pipe supplier and/or fusion provider:
   1) Pipe Size
   2) Dimensionality
   3) Pressure Class per applicable standard
   4) Color
   5) Recommended Minimum Bending Radius
   6) Recommended Maximum Safe Pull Force
   7) Fusion technician qualification indicating conformance with this specification
2. The following WORK PLAN AND INFORMATION is required from the contractor and/or slipline installer. This WORK PLAN AND INFORMATION shall also be supplied to the pipe supplier, should it be requested:
   1) Work plan shall include for each sliplining installation all excavation locations, interfering utilities, excavation dimensions, flow bypass and traffic control

schematics.

2) At least 2 weeks prior to the start of work, the Contractor shall submit its sliplining schedule identifying daily work hours and working dates for each installation.

3) Grout design mixes, installation plan, and contingency plan for the annular space grout to be used, if grout is to be used for annular space fill.

G POST-CONSTRUCTION SUBMITTALS

1. The following AS-RECORDED DATA is required from the contractor and/or fusion provider to the owner or pipe supplier upon request:

1) Approved datalogger device reports

2) Fusion joint documentation containing the following information:

a) Pipe Size and Thickness

b) Machine Size

c) Fusion Technician Identification

d) Job Identification

e) Fusion Joint Number

f) Fusion, Heating, and Drag Pressure Settings

g) Heat Plate Temperature

h) Time Stamp

i) Heating and Cool Down Time of Fusion

j) Ambient Temperature

2. The following AS-RECORDED DATA is required from the contractor and/or slipline installer to the owner or pipe supplier upon request:

1) Grout testing reports, if grout is to be used for annular space fill.

PART 2 – PRODUCTS

2.01 FUSIBLE POLYVINYLCHLORIDE PRESSURE PIPE FOR POTABLE WATER

A Fusible polyvinylchloride pipe shall conform to AWWA C900, AWWA C905, ASTM D2241 or ASTM D1785 for standard dimensions, as applicable. Testing shall be in accordance with the referenced AWWA standards for all pipe types.

B Fusible polyvinylchloride pipe shall be extruded with plain ends. The ends shall be square to the pipe and free of any bevel or chamfer. There shall be no bell or gasket of any kind incorporated into the pipe.

C Fusible polyvinylchloride pipe shall be manufactured in a standard 40’ nominal length, or custom lengths as specified.

D Fusible polyvinylchloride pipe shall be blue in color for potable water use.

E Pipe generally shall be marked per AWWA C900, AWWA C905, ASTM D2241, or ASTM D1785, as applicable, and shall include as a minimum:

1. Nominal pipe size
2. PVC
3. Dimension Ratio, Standard Dimension Ratio, or Schedule
4. AWWA pressure class or standard pressure rating for non-AWWA pipe
5. AWWA standard designation number or pipe type for non-AWWA pipe
6. NSF-61 mark verifying suitability for potable water service
7. Extrusion production-record code
8. Trademark or trade name
9. Cell Classification 12454 and/or PVC material code 1120 may also be included

F Pipe shall be homogeneous throughout and be free of visible cracks, holes, foreign material, blisters, or other visible deleterious faults.

2.02 FUSIBLE POLYVINYLCHLORIDE PRESSURE PIPE FOR NON-POTABLE WATER

A Fusible polyvinylchloride pipe shall conform to AWWA C900, AWWA C905, ASTM D2241 or ASTM D1785 for standard dimensionality, as applicable. Testing shall be in accordance with the referenced AWWA standards.

B Fusible polyvinylchloride pipe shall be extruded with plain ends. The ends shall be square to the pipe and free of any bevel or chamfer. There shall be no bell or gasket of any kind incorporated into the pipe.

C Fusible polyvinylchloride pipe shall be manufactured in a standard 40’ nominal length, or custom lengths as specified.

D Fusible polyvinylchloride pipe shall be purple in color for reclaim, reuse, or other non-potable water distribution or conveyance.

E Pipe generally shall be marked to include as a minimum:

1. Nominal pipe size
2. PVC
3. Dimension Ratio, Standard Dimension Ratio, or Schedule
4. Pressure class or standard pressure rating
5. Standard designation number or pipe type
6. Extrusion production-record code
7. Trademark or trade name
8. Cell Classification 12454 and/or PVC material code 1120 may also be included
9. For reclaim water service, the wording: “Reclaimed Water, NOT for Potable Use”

F Pipe shall be homogeneous throughout and be free of visible cracks, holes, foreign material, blisters, or other visible deleterious faults.

2.03 FUSIBLE POLYVINYLCHLORIDE PRESSURE PIPE FOR WASTEWATER

A Fusible polyvinylchloride pipe shall conform to AWWA C900, AWWA C905, ASTM D2241 or

ASTM D1785 for standard dimensionality, as applicable. Testing shall be in accordance with the referenced AWWA standards.

B Fusible polyvinylchloride pipe shall be extruded with plain ends. The ends shall be square to the pipe and free of any bevel or chamfer. There shall be no bell or gasket of any kind incorporated into the pipe.

C Fusible polyvinylchloride pipe shall be manufactured in a standard 40' nominal length, or custom lengths as specified.

D Fusible polyvinylchloride pipe shall be green in color for wastewater use.

E Pipe generally shall be marked to include as a minimum:

1. Nominal pipe size
2. PVC
3. Dimension Ratio, Standard Dimension Ratio, or Schedule
4. Pressure class or standard pressure rating
5. Standard designation number or pipe type
6. Extrusion production-record code
7. Trademark or trade name
8. Cell Classification 12454 and/or PVC material code 1120 may also be included

F Pipe shall be homogeneous throughout and be free of visible cracks, holes, foreign material, blisters, or other visible deleterious faults.

2.04 FUSIBLE POLYVINYLCHLORIDE NON-PRESSURE PIPE FOR WASTEWATER OR SURFACE WATER

A Fusible polyvinylchloride pipe shall conform to ASTM D3034 or ASTM F679.

B Fusible polyvinylchloride pipe may instead conform to AWWA C900 or AWWA C905, ASTM D2241 or ASTM D1785 for standard dimensionality, as applicable.

C Fusible polyvinylchloride pipe shall be extruded with plain ends. The ends shall be square to the pipe and free of any bevel or chamfer. There shall be no bell or gasket of any kind incorporated into the pipe.

D Fusible polyvinylchloride pipe shall be manufactured in a standard 40' nominal length, or custom lengths as specified.

E Fusible polyvinylchloride pipe shall be green in color for wastewater use. Fusible polyvinylchloride pipe shall be white in color for surface or storm water use.

F Pipe generally shall be marked to include as a minimum:

1. Nominal pipe size
2. PVC
3. Dimension Ratio, Standard Dimension Ratio, or Schedule
4. Pressure class or standard pressure rating
5. Standard designation number or pipe type
6. Extrusion production-record code

7. Trademark or trade name

8. Cell Classification 12454 and/or PVC material code 1120 may also be included

G Pipe shall be homogeneous throughout and be free of visible cracks, holes, foreign material, blisters, or other visible deleterious faults.

2.05 FUSION JOINTS

A Unless otherwise specified, fusible polyvinylchloride pipe lengths shall be assembled in the field with butt-fused joints. The Contractor shall follow the pipe supplier's written guidelines for this procedure. All fusion joints shall be completed as described in this specification.

2.06 CONNECTIONS AND FITTINGS FOR PRESSURE APPLICATIONS

A Connections shall be defined in conjunction with the coupling of project piping, as well as the tie-ins to other piping systems.

B DUCTILE IRON MECHANICAL AND FLANGED FITTINGS

Acceptable fittings for use with fusible polyvinylchloride pipe shall include standard ductile iron fittings conforming to AWWA/ANSI C110/A21.10 and AWWA/ANSI C111/A21.11.

1. Connections to fusible polyvinylchloride pipe may be made using a restrained or non-restrained retainer gland product for PVC pipe, as well as for MJ or flanged fittings.

2. Bends, tees and other ductile iron fittings shall be restrained with the use of thrust blocking or other means as indicated in the construction documents.

3. Ductile iron fittings and glands must be installed per the manufacturer's guidelines.

C PVC GASKETED, PUSH-ON FITTINGS

Acceptable fittings for use with fusible polyvinylchloride pipe shall include standard PVC pressure fittings conforming to AWWA C900 or AWWA C905.

1. Acceptable fittings for use joining fusible polyvinylchloride pipe other sections of fusible polyvinylchloride pipe or other sections of PVC pipe shall include gasketed PVC, push-on type couplings and fittings, including bends, tees, and couplings as shown in the drawings.

2. Bends, tees and other PVC fittings shall be restrained with the use of thrust blocking or other restraint products as indicated in the construction documents.

3. PVC gasketed, push-on fittings and mechanical restraints, if used, must be installed per the manufacturer's guidelines.

D FUSIBLE POLYVINYL CHLORIDE SWEEPS OR BENDS

1. Fusible polyvinyl chloride sweeps or bends shall conform to the same sizing convention, diameter, dimensional tolerances and pressure class of the pipe being joined using the sweep or bend.

2. Fusible polyvinyl chloride sweeps or bends shall be manufactured from the same fusible polyvinyl chloride pipe being used for the installation, and shall have at least 2 feet of straight section on either end of the sweep or bend to allow for fusion of

the sweep to the pipe installation. There shall be no gasketed connections utilized with a fusible polyvinyl chloride sweep.

3. Standard fusible polyvinyl chloride sweep or bend angles shall not be greater than 22.5 degrees, and shall be used in nominal diameters ranging from 4 inch through 16 inch.

E SLEEVE-TYPE COUPLINGS

1. Sleeve-type mechanical couplings shall be manufactured for use with PVC pressure pipe, and may be restrained or unrestrained as indicated in the construction documents.

2. Sleeve-type couplings shall be rated at the same or greater pressure carrying capacity as the pipe itself.

F EXPANSION AND FLEXIBLE COUPLINGS

1. Expansion-type mechanical couplings shall be manufactured for use with PVC pipe, and may be restrained or unrestrained as indicated in the construction documents.

2. Expansion-type mechanical couplings shall be rated at the same or greater pressure carrying capacity as the pipe itself.

G CONNECTION HARDWARE

Bolts and nuts for buried service shall be made of non-corrosive, high-strength, low-alloy steel having the characteristics specified in ANSI/AWWA C111/A21.11, regardless of any other protective coating.

2.07 CONNECTIONS FOR GRAVITY SANITARY SEWER AND NON-PRESSURE APPLICATIONS

A The following connections are to be used in conjunction with tie-ins to other non-pressure, gravity sewer piping and/or structures, and shall be as indicated in the construction documents.

B PVC GASKETED, PUSH-ON COUPLINGS

1. Acceptable couplings for joining fusible polyvinylchloride pipe to other sections of fusible polyvinylchloride pipe or other sections of PVC pipe shall include gasketed PVC, push-on type couplings as indicated in the construction documents.

2. PVC gasketed, push-on fittings and/or restraint hardware must be installed per the manufacturer's guidelines.

C FUSIBLE POLYVINYL CHLORIDE SWEEPS OR BENDS

1. Fusible polyvinyl chloride sweeps or bends shall conform to the same sizing convention, diameter, dimensional tolerances and pressure class of the pipe being joined using the sweep or bend.

2. Fusible polyvinyl chloride sweeps or bends shall be manufactured from the same fusible polyvinyl chloride pipe being used for the installation, and shall have at least 2 feet of straight section on either end of the sweep or bend to allow for fusion of the sweep to the pipe installation. There shall be no gasketed connections utilized with a fusible polyvinyl chloride sweep.

3. Standard fusible polyvinyl chloride sweep or bend angles shall not be greater than

22.5 degrees, and shall be used in nominal diameters ranging from 4 inch through 16 inch.

D SLEEVE-TYPE COUPLINGS

1. Sleeve-type mechanical couplings shall be manufactured for use with PVC pipe, and may be restrained or unrestrained as indicated in the construction documents.

E EXPANSION AND FLEXIBLE COUPLINGS

1. Expansion-type mechanical couplings shall be manufactured for use with PVC pipe, and may be restrained or unrestrained as indicated in the construction documents.

F CONNECTION HARDWARE

1. Bolts and nuts for buried service shall be made of non-corrosive, high-strength, low-alloy steel having the characteristics specified in ANSI/AWWA C111/A21.11, regardless of any other protective coating.

G CONNECTION TO SANITARY SEWER MANHOLES AND STRUCTURES

1. Fusible polyvinylchloride pipe shall be connected to manholes and other structures to provide a leak-free, properly graded flow into or out of the manhole or structure.
2. Connections to existing manholes and structures shall be as indicated in the construction documents.
   1) For a cored or drilled opening provide a flexible, watertight connection that meets and/or exceeds ASTM C923.
   2) For a knock out opening, provide a watertight connection (waterstop or other method) meeting the material requirements of ASTM C923 that is securely attached to the pipe with stainless steel bands or other means.
   3) Grout opening in manhole wall with non-shrink grout. Pour concrete collar around pipe and outside manhole opening. Provide flexible pipe joint or flexible connector within 2 feet of the collar.
3. Connections to a new manhole or structure shall be as indicated in the construction documents.
   1) A flexible, watertight gasket per ASTM C 923 shall be cast integrally with riser section(s) for all precast manhole and structures.
   2) Drop connections shall be required where shown on drawings.
   3) Grout internal joint space with non-shrink grout.

2.08 GROUT

A Grout for use as a filler of the annular space between the fusible polyvinylchloride pipe and the host pipe shall be a low-density, highly flowable mix. Grout shall meet the compressive strength requirements for the installation per the contract documents.

B Testing requirements shall be in accordance with the contract documents. Contractor may incorporate grout additives to improve its flow properties, provided that strength property requirements are met.

2.09 PIPE PULL HEADS

A Pipe pull heads, if utilized, shall employ a positive through-bolt design assuring a smooth walled bolt against the pipe cross-section at all times.

B Pipe pull heads shall be specifically designed for use with fusible polyvinylchloride pipe, and shall be as recommended by the pipe supplier.

2.10 PIPE ROLLERS

A Pipe rollers, if required, shall be of sufficient size to fully support the weight of the pipe during handling and pullback operations.

B A sufficient quantity of rollers and spacing, per the pipe supplier's guidelines shall be used to assure adequate support and resist excessive sagging of the product pipe.

PART 3 --EXECUTION

3.01 DELIVERY AND OFF-LOADING

A All pipe shall be bundled or packaged in such a manner as to provide adequate protection of the ends during transportation to the site. Any pipe damaged in shipment shall be replaced as directed by the owner or engineer.

B Each pipe shipment should be inspected prior to unloading to see if the load has shifted or otherwise been damaged. Notify owner or engineer immediately if more than immaterial damage is found. Each pipe shipment should be checked for quantity and proper pipe size, color, and type.

C Pipe should be loaded, off-loaded, and otherwise handled in accordance with AWWA M23, and all of the pipe supplier's guidelines shall be followed.

D Off-loading devices such as chains, wire rope, chokers, or other pipe handling implements that may scratch, nick, cut, or gouge the pipe are strictly prohibited.

E During removal and handling, be sure that the pipe does not strike anything. Significant impact could cause damage, particularly during cold weather.

F If appropriate unloading equipment is not available, pipe may be unloaded by removing individual pieces. Care should be taken to insure that pipe is not dropped or damaged. Pipe should be carefully lowered, not dropped, from trucks.

3.02 HANDLING AND STORAGE

A Any length of pipe showing a crack or which has received a blow that may have caused an incident fracture, even though no such fracture can be seen, shall be marked as rejected and removed at once from the work. Damaged areas, or possible areas of damage may be removed by cutting out and removing the suspected incident fracture area. Limits of the acceptable length of pipe shall be determined by the owner or engineer.

B Any scratch or gouge greater than 10% of the wall thickness will be considered

significant and can be rejected unless determined acceptable by the owner or engineer.

C Pipe lengths should be stored and placed on level ground. Pipe should be stored at the job site in the unit packaging provided by the manufacturer. Caution should be exercised to avoid compression, damage, or deformation to the ends of the pipe. The interior of the pipe, as well as all end surfaces, should be kept free from dirt and foreign matter.

D Pipe shall be handled and supported with the use of woven fiber pipe slings or approved equal. Care shall be exercised when handling the pipe to not cut, gouge, scratch or otherwise abrade the piping in any way.

E If pipe is to be stored for periods of 1 year or longer, the pipe should be shaded or otherwise shielded from direct sunlight. Covering of the pipe which allows for temperature build-up is strictly prohibited. Pipe should be covered with an opaque material while permitting adequate air circulation above and around the pipe as required to prevent excess heat accumulation.

F Pipe shall be stored and stacked per the pipe supplier's guidelines.

3.03 FUSION PROCESS

A GENERAL

1. Fusible polyvinylchloride pipe will be handled in a safe and non-destructive manner before, during, and after the fusion process and in accordance with this specification and pipe supplier's guidelines.
2. Fusible polyvinylchloride pipe will be fused by qualified fusion technicians, as documented by the pipe supplier.
3. Each fusion joint shall be recorded and logged by an electronic monitoring device (data logger) connected to the fusion machine.
4. Only appropriately sized and outfitted fusion machines that have been approved by the pipe supplier shall be used for the fusion process. Fusion machines must incorporate the following elements:

   a) HEAT PLATE - Heat plates shall be in good condition with no deep gouges or scratches. Plates shall be clean and free of any debris or contamination. Heater controls shall function properly; cord and plug shall be in good condition. The appropriately sized heat plate shall be capable of maintaining a uniform and consistent heat profile and temperature for the size of pipe being fused, per the pipe supplier's guidelines.

   b) CARRIAGE – Carriage shall travel smoothly with no binding at less than 50 psi. Jaws shall be in good condition with proper inserts for the pipe size being fused. Insert pins shall be installed with no interference to carriage travel.

   c) GENERAL MACHINE - Overview of machine body shall yield no obvious defects, missing parts, or potential safety issues during fusion.

   d) DATA LOGGING DEVICE – An approved datalogging device with the current version of the pipe supplier's recommended and compatible software shall be used. Datalogging device operations and maintenance manual shall be with

the unit at all times. If fusing for extended periods of time, an independent 110V power source shall be available to extend battery life.

5. Other equipment specifically required for the fusion process shall include the following:

   a) Pipe rollers shall be used for support of pipe to either side of the machine

   b) A weather protection canopy that allows full machine motion of the heat plate, fusion assembly and carriage shall be provided for fusion in inclement, extreme temperatures, and /or windy weather, per the pipe supplier's recommendations.

   c) An infrared (IR) pyrometer for checking pipe and heat plate temperatures.

   d) Fusion machine operations and maintenance manual shall be kept with the fusion machine at all times.

   e) Facing blades specifically designed for cutting fusible polyvinylchloride pipe shall be used.

B JOINT RECORDING

Each fusion joint shall be recorded and logged by an electronic monitoring device (data logger) connected to the fusion machine. The fusion data logging and joint report shall be generated by software developed specifically for the butt-fusion of fusible polyvinyl chloride pipe. The software shall register and/or record the parameters required by the pipe supplier and these specifications. Data not logged by the data logger shall be logged manually and be included in the Fusion Technician's joint report.

3.04 PIPE CLEANING

A Host pipe shall be cleaned in accordance with all applicable standards and guidelines. Unless otherwise specified, all interior pipe surfaces shall be cleaned per AWWA M28.

B Hazardous materials shall be removed and disposed of per all applicable regulations.

C All pipelines shall be cleaned with as many passes as necessary to create a uniform interior host pipe surface free of all loose material and sharp edges. Any potentially deleterious areas of the host pipe should be removed or secured in place, prior to the insertion of the fusible polyvinylchloride pipe.

3.05 TV INSPECTION

A The host pipe shall be inspected by TV after or during the cleaning process in accordance with these specifications.

1. TV inspection after host pipe cleaning shall indicate condition of host pipe and suitability of host pipe for fusible polyvinylchloride pipe insertion.

2. Obstructions such as corporation taps, valves and valve bodies, and collapsed piping shall be remedied prior to insertion. Spot repairs shall be made in accordance with the drawings and these specifications.

3.06 FUSIBLE POLYVINYLCHLORIDE PIPE INSERTION AND INSTALLATION

A EXCAVATION AND ACCESS PITS

1. Access pit length shall be such that the minimum bending radius for the fusible

polyvinylchloride pipe, per the pipe supplier is maintained. Sheeting, shoring and bracing requirements shall be in accordance with these specifications and applicable jurisdictional standards.

2. Access pit excavations shall be performed at all points where the fusible polyvinylchloride pipe will be inserted into the existing pipeline. When possible, access pit excavations shall coincide with host pipe lateral connection points or other appurtenance installations.

B PULLING EQUIPMENT

1. The pulling mechanism shall be properly connected to the end of the fusible polyvinylchloride pipe via a pulling head or arrangement approved by the pipe supplier.

2. The maximum pulling tension on the fusible polyvinylchloride pipe shall not exceed the pipe supplier's safe pulling force as submitted for this project.

3. Immediately following the completion of an installation by sliplining, if possible, the pipe should be pushed back into the location of the insertion, at the pulling head, until a small amount of movement is realized at the insertion pit on the other side of the installation from the pulling equipment.

C FUSIBLE POLYVINYLCHLORIDE PIPE CARE

1. The fusible polyvinylchloride pipe shall be handled with care to minimize the possibility of it being cut, kinked, gouged, or otherwise damaged. The use of cables or hooks will not be permitted.

2. Sections of the fusible polyvinylchloride pipe damaged, cut, or gouged shall be repaired by cutting out the section of damaged pipe and rejoining.

3.07 ANNULAR SPACE GROUTING

A If required, the annular space between the outside of the fusible polyvinylchloride pipe and the inside of the existing host pipe shall be filled with a flowable grout in accordance with the contract documents.

B If required, samples of grout shall be obtained in accordance with ASTM C495. One set of four standard cylinders shall be cast for each batch. Special handling and sampling procedures shall be followed if indicated by the grout manufacturer. The samples must meet the design compressive strength of the grout as outlined in this specification and per the grout manufacturer. Samples shall be tested in accordance with ASTM C495.

C Grouting of the annular space shall be done in such a manner as to prevent damage, floating, or collapse of the fusible polyvinylchloride pipe. Grouting operations shall be properly vented. If the distance between grout points exceeds the Contractor's pumping capability additional grouting points shall be excavated. The fusible polyvinylchloride pipe at access pits, service connections, and grouting points shall not be grouted above the springline of the existing host pipe.

D The fusible polyvinylchloride pipe shall be filled with water prior to the grouting procedure. This shall aid in keeping the fusible polyvinylchloride pipe from floating or collapsing during grouting operation and also aid in dissipating the heat of hydration and its effects on the fusible polyvinylchloride pipe as the grout cures. This can be done in coordination with the testing performed on the fusible polyvinylchloride pipe.

3.08 PREPARATION PRIOR TO MAKING CONNECTIONS INTO EXISTING PIPING SYSTEMS

A Approximate locations for existing piping systems are shown in the construction documents. Prior to making connections into existing piping systems, the contractor shall:

1. Field verify location, size, piping material, and piping system of the existing pipe.
2. Obtain all required fittings, which may include saddles, sleeve type couplings, flanges, tees, or others as shown in the construction documents.
3. Have installed all temporary pumps and/or pipes in accordance with established connection plans.

B Unless otherwise approved, new piping systems shall be completely assembled and successfully tested prior to making connections into existing pipe systems.

3.09 PIPE SYSTEM CONNECTIONS

A Pipe connections shall be installed per applicable standards and regulations, as well as per the connection manufacturer's guidelines and as indicated in the construction documents. Pipe connections to structures shall be installed per applicable standards and regulations, as well as per the connection manufacturer's guidelines.

3.10 TAPPING FOR POTABLE AND NON-POTABLE WATER APPLICATIONS

A Tapping shall be performed using standard tapping saddles designed for use on PVC piping in accordance with AWWA C605. Tapping shall be performed only with use of tap saddles or sleeves. NO DIRECT TAPPING WILL BE PERMITTED. Tapping shall be performed in accordance with the applicable sections for Saddle Tapping per Uni-Pub-8.

B All connections requiring a larger diameter than that recommended by the pipe supplier, shall be made with a pipe connection as specified and indicated on the drawings.

C Equipment used for tapping shall be made specifically for tapping PVC pipe:

1. Tapping bits shall be slotted "shell" style cutters, specifically made for PVC pipe. 'Hole saws' made for cutting wood, steel, ductile iron, or other materials are strictly prohibited.
2. Manually operated or power operated drilling machines may be used.

D Taps may be performed while the pipeline is filled with water and under pressure ('wet' tap,) or when the pipeline is not filled with water and not under pressure ('dry' tap).

3.11 TESTING

A Testing shall comply with all applicable jurisdictional building codes, statutes, standards, regulations, and laws.

B HYDROSTATIC TESTING AND LEAKAGE TESTING FOR PRESSURE PIPING

1. Hydrostatic and leakage testing for piping systems that contain mechanical jointing as well as fused PVC jointing shall comply with AWWA C605.
2. Unless agreed to or otherwise designated by the owner or engineer, for a simultaneous hydrostatic and leakage test following installation, a pressure equal to 150% of working pressure at point of test, but not less than 125% of normal

working pressure at highest elevation shall be applied. The duration of the pressure test shall be for two (2) hours.

3. If hydrostatic testing and leakage testing are performed at separate times, follow procedures as outlined in AWWA C605.

4. In preparation for pressure testing the following parameters must be followed:

   1) All air must be vented from the pipeline prior to pressurization. This may be accomplished with the use of the air relief valves or corporation stop valves, vent piping in the testing hardware or end caps, or any other method which adequately allows air to escape the pipeline at all high points. Venting may also be accomplished by 'flushing' the pipeline in accordance with the parameters and procedures as described in AWWA C605.

   2) The pipeline must be fully restrained prior to pressurization. This includes complete installation of all mechanical restraints per the restraint manufacturer's guidelines, whether permanent or temporary to the final installation. This also includes the installation and curing of any and all required thrust blocking. All appurtenances included in the pressure test, including valves, blow-offs, and air-relief valves shall be checked for proper installation and restraint prior to beginning the test.

   3) Temporary pipeline alignments that are being tested, such as those that are partially installed in their permanent location shall be configured to minimize the amount of potentially trapped air in the pipeline.

C LEAKAGE TESTING FOR NON-PRESSURE PIPING

1. Gravity sanitary sewers that contain mechanical jointing in addition to fused PVC joints may need to be tested for excessive leakage.

2. Gravity sanitary sewer leakage testing may include appropriate water or low pressure air testing. The leakage outward or inward (exfiltration or infiltration) shall not exceed 25 gallons per inch of pipe diameter per mile per day for any section of the system. An exfiltration or infiltration test shall be performed with a minimum positive head of two feet. The air test, if used, shall be conducted in accordance with one of the following Standards:

   1) ASTM F1417

   2) UNI-B-6

3. The testing method selected shall properly consider the existing groundwater elevations during the test.

D DEFLECTION TESTING FOR NON-PRESSURE PIPING

1. After completion of the backfill, the engineer or owner may require that a deflection test be performed.

2. Deflection tests should be conducted using a go/no-go mandrel. The mandrel's outside dimension shall be sized to permit no more than 7.5 percent deflection. The percent deflection shall be established from the base inside diameter of the pipe. If the internal beading of the fused joints for the pipe is not required to be removed, the mandrel shall account for this clearance as well. The mandrel shall

be approved by the owner or engineer prior to use. Lines that permit safe entry may allow other deflection test options, such as direct measurements.

E DISINFECTION OF THE PIPELINE FOR POTABLE WATER PIPING

1. After installation, the pipeline, having passed all required testing, shall be disinfected prior to being put into service. Unless otherwise directed by the owner or engineer, the pipeline will be disinfected per AWWA C651.

F PARTIAL TESTING

1. Segments of the pipe may be tested separately in accordance with standard testing procedure, as approved by the owner and engineer.

END OF SECTION

Section 3

Project Profiles & Brochure

California-Nevada State Profile

www.undergroundsolutions.com

Over 100 Water, Wastewater and Reuse Pipeline Projects Completed Throughout California and Nevada with Fusible PVC™ Pipe Systems

Since its introduction in California and Nevada in 2006, over 100 pipeline projects have been completed throughout these neighboring states utilizing Underground Solutions' Fusible PVC™ pipe technology. Fusible PVC™ pipe has been installed via horizontal directional drilling (HDD), sliplining, pipe bursting, jack & bore, and direct bury installations. Municipalities have achieved significant savings while realizing the benefits of a leak-free, fully-restrained, fused PVC pipe system that is easy to maintain. Project pipe sizes have varied from 4" to 27" in diameter with over 200,000 LF installed or currently under contract.

Until 2006, the primary pipe material used for trenchless applications was HDPE. With the advent of Fusible PVC™ pipe, utility owners, design engineers, and contractors now have the alternative of a thermally butt fused PVC pipe system incorporating the advantages and familiarity of AWWA C900/C905 PVC pipe. With PVC pipe already prevalent in many utility systems as the incumbent pipe material, Fusible PVC™ pipe allows utilities to maintain material continuity when faced with trenchless or direct bury restrained joint applications.

Fusible PVC™ pipe provides several advantages, including the ability to utilize standard ductile iron fittings and/or PVC appurtenances to easily reconnect to ductile iron or PVC bell-and-spigot pipe, eliminating the need for expensive specialized fittings and transition pieces required when using HDPE pipe. With a tensile strength and Hydrostatic Design Basis (HDB) approximately 2.5 times greater than HDPE, Fusible PVC™ pipe is able to provide an equivalent ID and working pressure with a smaller pipe OD versus HDPE pipe. The reduction in pipe OD reduces borehole size in HDD and soil displacement in pipe burst applications. In sliplining applications Fusible PVC™ pipe provides a fully structural replacement pipe (independent of the host pipe) while providing greater ID and flow capacity compared to HDPE pipe at a given pressure class, lowering annual pumping and operating costs.

With reduced material and installation costs, Fusible PVC™ pipe systems have repeatedly produced savings to utility owners in competitive bidding ranging from 5% to 30% of total project value depending on project scope. Fusible PVC™ pipe has routinely been placed into Caltrain and California Department of Transportation (Caltrans) right-of-ways, crossing under major freeways including I-5, I-10, I-880, I-605, Highway 101, Highway 1, and Highway 29.

Select End Users: American Canyon; Army Corp of Engineers; City of Anderson; City of Blythe; California Water Service Company; Central Contra Costa Sanitation District; City of Burlingame; City of Davis; Delta Diablo Sanitation District; East Bay Municipal Utility District (EBMUD); Eastern Municipal Water District (EMWD); City of Fernley, NV; City of Fresno; Gardnerville, NV; City of Hayward; City of Hollister; Irvine Ranch Water District; City of Laguna Beach; City of Mesquite, NV; City of Milpitas; Minden, NV; City of Monterey; City of Napa; North Marin Water District; City of Oceanside; Olivenhain Water District; City of Petaluma; City of San Bernardino; City of San Diego; San Gabriel Valley Water Co.; San Jose Water Company; City of Santa Clara; City of Santa Cruz; City of Santa Rosa; Scripps Oceanographic Institute; Shell Oil Co.; City of South San Francisco; City of Sunnyvale; South Tahoe Public Utility District; Sweetwater Authority.

Select Engineers: BKF Engineers; Brelje & Race; Dodson Psomas; Dudek; EBMUD; City of Hayward; HDR; Infrastructure Engineering Corp.; Kimley-Horn & Associates, Inc.; Nolte & Associates, Inc.; Psomas; RBF Consulting; RMC Water & Environment; Tetra Tech, Inc.; URS; Wilsey Ham; Winzler & Kelly.

Select Mainline Contractors: Arizona Pipeline Co.; Granite Construction; KG Walters; JMB Construction, Inc.; KJ Woods Construction, Inc.; Lewis & Tibbetts, Inc.; Mountain Cascade, Inc.; NEWest Construction Company, Inc.; North Bay Construction; Preston Pipelines; Pipeline Excavators; Somerville Construction; Steve Bubalo Construction Co.; Tennyson Electric; TC Construction; West Valley Construction Company, Inc.

Select HDD Contractors: California Boring; Cross Country HDI; Golden State Boring; Inland Valley Engineering, Inc.; J.C. Drilling; Northern Directional Drilling, Inc.; Silver State Boring, Inc.; Wells Construction.

California-Nevada State Profile

www.undergroundsolutions.com

American Canyon: 3,000' 18" Force Main; HDD & Direct Bury

California Water Service Co.: 5,220' 16" Potable Water; Slipline

Burlingame: 7,000' 12" – 27" Sanitary Sewer; Pipe Burst, Jack & Bore, Direct Bury

S. San Francisco: 9,200' 10" – 27" SS; Pipe Burst & HDD

Milpitas: 12,000' 4" & 8" Potable Water; HDD

San Ramon: 7,000' 16" Reuse; HDD & Direct Bury

Sunnyvale: 1,000' 20" Potable Water; Slipline

Hollister: 4,000' 20" Reuse; Direct Bury

Fernley, NV: 1,440' 24" Potable Water/Reuse; HDD

Santa Cruz: 2,000' 18" Potable Water; Slipline

For additional information regarding projects in Northern CA or Northern NV, please contact Rob Craw at (925) 577-7566 or rcraw@undergroundsolutions.com

Underground Solutions, Inc. (UGSI) provides infrastructure technologies for water/wastewater applications. UGSI's Fusible PVC™ products, including **Fusible C-900®, Fusible C-905® and FPVC™**, contain a proprietary PVC formulation that, when combined with UGSI's patented fusion process, results in a monolithic, fully-restrained, gasket-free, leak-free piping system. UGSI's **Duraliner™** is a patented, close-fit pipeline renewal system creating a stand-alone structural liner.

California-Nevada State Profile

www.undergroundsolutions.com

Scripps Institute of Oceanography:
8” Sea Water Return; HDD

City of Blythe:
16” Potable Water; Slipline

City of San Diego:
8” Gravity Sewer; HDD

City of Laguna Beach:
20” Force Main; Slipline

City of Laguna Beach:
10” Fusible Sweeps
Force Main; Open Cut

City of Corona:
16” Potable Water;
Slipline

City of San Bernardino:
12” Potable Water;
Slipline

City of Solana Beach:
12” Force Main; Duraliner™

Mesquite, NV:
16” Reuse; Direct Bury

Beverly Hills:
16” Potable Water; Duraliner™

For additional information regarding projects in Southern California or Southern Nevada, please contact Dave Weinbaum at (858) 442-2559 or dweinbaum@undergroundsolutions.com

Underground Solutions, Inc. (UGSI) provides infrastructure technologies for water/wastewater applications. UGSI’s Fusible PVC™ products, including **Fusible C-900®, Fusible C-905® and FPVC™**, contain a proprietary PVC formulation that, when combined with UGSI’s patented fusion process, results in a monolithic, fully-restrained, gasket-free, leak-free piping system. UGSI’s **Duraliner™** is a patented, close-fit pipeline renewal system creating a stand-alone structural liner.

Slipline Profile

www.undergroundsolutions.com

Over One-Half Million Feet of Water & Wastewater Pipelines Renewed via Sliplining Using Fusible PVC™ Pipe

With many older water and wastewater pipelines now surrounded by adjacent utilities or located beneath ever busier roadways, sliplining offers a low-dig replacement solution that reduces construction risk and minimizes disruption to the public. Difficulties with accessing congested utility corridors via open-cut, combined with escalating restoration expenses, make sliplining a cost effective and environmentally attractive design alternative to direct bury replacement.

Prior to 2004, pipeline rehabilitation was primarily accomplished using liners such as cured-in-place-pipe (CIPP), epoxy coatings, cement mortar lining, or swaged/folded HDPE. While popular in gravity sewer and other non-pressurized pipe rehabilitation, lining solutions are often limited in water transmission/distribution lines and many force mains where higher pressures are common. Liners typically rely to some degree on the host pipe and are generally not stand-alone systems. While HDPE liners may provide a stand-alone structural system, pipe wall thickness increases rapidly with escalating pressure requirements, sacrificing ID and constricting flow.

PVC pipe's high strength-to-weight ratio, long-life, corrosion resistance, and flexibility have made it a popular and preferred sliplining alternative. Fusible PVC™ pipe systems provide a structural solution free of reliance on the deteriorating host pipe while preserving high flow capacity. PVC pipe has excellent resistance to the oxidizing effects of chlorine based disinfectants, and PVC pipes have superior resistance to gasoline and gasoline saturated groundwater. These qualities make Fusible PVC™ pipe systems an ideal choice to ensure safe, reliable drinking water conveyance, while PVC's chemical resistance makes it an effective, long-term solution for deteriorating concrete, steel, and ductile iron wastewater lines.

Since its introduction in 2004, Fusible PVC™ pipe has been successfully utilized in over 200 sliplining projects and is increasingly sole source specified due to its unique advantages in preserving maximum flow capacity while providing a fully structural, long-term renewal solution independent of host pipe condition.

Milestones:

- **Over one-half million LF sliplined (4" – 30" carrier pipe diameter)**
- **More than 200 projects completed, over 1,000 separate pulls**
- **Continuous pulls of 3,510' (12"), 3,200' (16"), 2,200' (24"), 1,810' (30")**

Advantages of Fusible PVC™ Pipe:

- **Use standard fittings to reconnect to PVC and ductile iron pipe**
  - Eliminates electro-fused couplings or in-pit fusion of adaptors
  - Simplifies maintenance and fittings inventory
- **Significantly greater flow capacity**
  - Larger ID for equal OD and pressure versus HDPE (≥ 25%)
  - PVC C-Factor of 150 often offsets ID reduction
- **Fully stand-alone structural solution**
  - No reliance upon host pipe for pressure rating
- **Enables downsizing of casings due to smaller OD**
  - Smaller OD for similar ID and pressure class versus HDPE
- **Greater pull strength and less pipe weight**
  - More than 2X the tensile strength and pull force of HDPE
  - Enables longer pulls requiring fewer installation pits
  - No relaxation period required for reconnection

Select Slipline Projects

www.undergroundsolutions.com

El Paso, TX: 16,460’ of 24”

Harrisburg, PA: 3,510’ of 12”

Newport, RI: 3,890’ of 30”

Hamilton, OH: 4,540’ of 20”

Secaucus, NJ: 2,680’ of 14”

Laguna Beach, CA: 1,280’ of 20”

Atherton, CA: 5,260’ of 16”

Helena, MT: 5,100’ of 16”

Bremerton, WA: 42,000’ 8”, 10” & 16”

South Jordan, UT: 1,400’ of 30”

Albuquerque, NM: 3,960’ of 14” & 16”

Bakersfield, CA: 16,000’ of 24”

underground SOLUTIONS®

Fusible PVC™ Pipe Systems
Fusible C-900® • Fusible C-905® • FPVC™

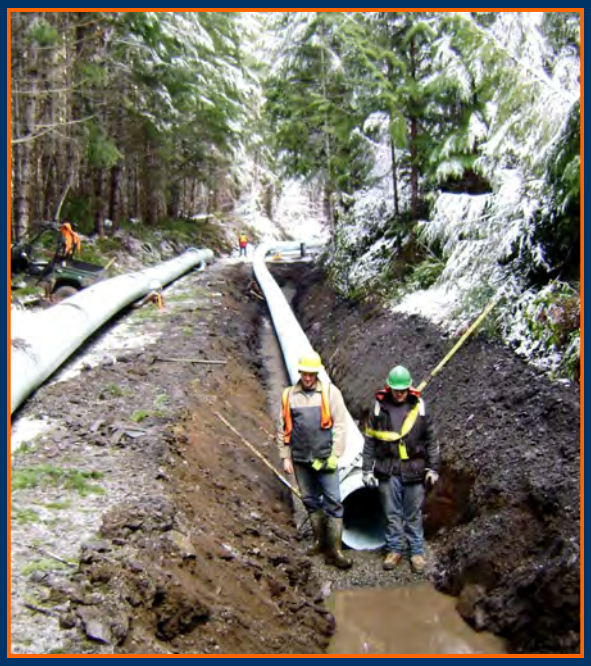

www.undergroundsolutions.com

NSF Certified to NSF/ANSI 61 · IAB Member of the Industry Advisory Board Trenchless Technology Center · UNI-BELL PVC PIPE ASSOCIATION Uni-Bell · NASTT · AWWA MEMBER

Underground Solutions, Inc. (UGSI) is an infrastructure technology and pipeline rehabilitation company. UGSI has developed and continues to develop unique and proprietary technologies focused on the underground infrastructure industry, including its line of Fusible PVC™ pipe products. Fusible C-900®, Fusible C-905® and FPVC™ pipe provide the only available method of installing a continuous, monolithic, gasket-free PVC pipe capable of being used in numerous trenchless or conventional direct bury applications. Applications include pressure and non-pressure installations in the water, sewer, electrical, industrial and telecommunications industries. Fusible PVC™ has been fused and installed throughout the United States, Canada and Mexico.

Installations:

- Trenchless
  - Horizontal Directional Drilling (HDD)
  - Sliplining
  - Pipe Bursting
- Direct Bury

Applications:

- Water Mains (AWWA C900, C905)
- Sewer - Gravity and Force Mains
- Process and Raw Water
- Water Reuse
- Storm Drains
- Conduit
- Casings

Fusible C-900® and Fusible C-905® Product Lines Meet:

- AWWA C900/C905 requirements
- NSF- 61 and NSF- 14 certification to AWWA C900 and C905 standards
- ASTM cell classification 12454
- PPI TR-2 formulation requirements

Fusible C-900®, Fusible C-905®, FPVC™:

- Only fusible polyvinyl chloride pipe system
- 100 year design life
- Innovative, patented thermal butt fusion technology and proprietary PVC formulation
- Sizes ranging from 4” to 36”

Features and Benefits:

- Monolithic, fully-restrained pipe system
- Gasket-free, leak-free joints
- Uses readily available standard waterworks fittings
- PVC is the most widely accepted pipe material used in water systems today
- Recommended safe pulling allowance greater than HDPE for similar ID and pressure class
- Recommended safe pulling force greater than jointed PVC pipe systems
- Reduced installation costs due to lighter weight and reduced OD dimensions
- Excellent abrasion and scratch-resistant properties
- Superior resistance to hydrocarbon permeation
- Superior resistance to oxidation from chlorine-based disinfectants versus HDPE
- Continuous pull-in lengths of over 5,100 LF

Pipe Dimensional Data

DIPS

	Size	OD	DR	Min. Wall (in)	Avg. ID (in)	Wt. (lb/ft)	Safe Pulling Force (lbs)
C900	4"	4.80"	14	.34	4.07	3.18	13,400
			18	.27	4.23	2.53	10,600
			25	.19	4.39	1.83	7,700
	6"	6.90"	14	.49	5.85	6.50	27,700
			18	.38	6.09	5.24	21,900
			25	.28	6.31	3.79	16,000
	8"	9.05"	14	.65	7.68	11.09	47,700
			18	.50	7.98	8.98	37,800
			25	.36	8.28	6.49	27,600
	10"	11.10"	14	.79	9.42	16.76	71,800
			18	.62	9.79	13.59	56,800
			25	.44	10.16	9.93	41,600
	12"	13.20"	14	.94	11.20	24.06	101,600
			18	.73	11.65	19.30	80,300
			25	.53	12.08	13.82	58,800
C905	14"	15.30"	18	.85	13.50	26.14	108,000
			21	.73	13.75	22.02	93,400
			25	.61	14.00	19.16	79,000
	16"	17.40"	18	.97	15.35	34.18	139,700
			21	.83	15.64	27.99	120,800
			25	.70	15.92	24.45	102,200
	18"	19.50"	18	1.08	17.20	41.05	175,400
			21	.93	17.53	35.76	151,700
			25	.78	17.85	30.08	128,400
	20"	21.60"	18	1.20	19.06	51.01	215,300
			21	1.03	19.42	45.30	186,100
			25	.86	19.77	36.79	157,500
			32.5	.67	20.19	28.89	122,400
	24"	25.80"	18	1.43	22.76	75.87	307,100
			21	1.23	23.19	59.22	265,600
			25	1.03	23.61	52.71	224,800
			32.5	.79	24.12	43.96	174,600
	30"	32.00"	25	1.28	29.29	80.14	345,800
			32.5	.99	29.91	66.61	268,700
			41	.78	30.35	53.60	214,200
	36"	38.30"	25	1.53	35.05	124.24	495,400
			32.5	1.18	35.80	96.96	384,600
			41	.93	36.32	77.19	306,900

IPS / Schedule

Size	OD	DR	Min. Wall (in)	Avg. ID (in)	Wt. (lb/ft)	Safe Pulling Force (lbs)
4"	4.50"	Sch. 80	.34	3.78	2.97	12,400
		Sch. 40	.24	3.99	2.06	8,900
		DR 26	.17	4.14	1.53	6,400
6"	6.63"	Sch. 80	.43	5.71	5.46	23,400
		Sch. 40	.28	6.03	3.63	15,600
		DR 26	.26	6.07	3.32	14,500
8"	8.63"	Sch. 80	.50	7.57	8.30	35,700
		DR 26	.33	7.93	5.66	24,000
		Sch. 40	.32	7.95	5.46	23,300
10"	10.75"	Sch. 80	.59	9.50	12.30	52,700
		DR 26	.41	9.88	8.79	37,200
		Sch. 40	.37	9.97	7.75	33,700
12"	12.75"	Sch. 80	.69	11.29	16.92	73,100
		DR 26	.49	11.71	12.37	52,800
		Sch. 40	.41	11.88	10.24	44,500
14"	14.00"	Sch. 80	.75	12.41	20.85	87,400
		DR 26	.54	12.86	15.21	63,900
		Sch. 40	.44	13.07	12.14	52,400
16"	16.00"	Sch. 80	.84	14.22	26.81	112,000
		DR 26	.62	14.69	20.00	83,800
		Sch. 40	.50	14.94	15.85	68,100
18"	18.00"	Sch. 80	.94	16.01	33.54	141,000
		DR 26	.69	16.54	25.16	105,000
		Sch. 40	.56	16.81	20.78	85,900
20"	20.00"	Sch. 80	1.03	17.82	41.05	171,800
		DR 26	.77	18.37	31.16	130,200
		Sch. 40	.59	18.75	23.90	100,700
24"	24.00"	Sch. 80	1.22	21.41	58.23	244,400
		DR 26	.92	22.05	44.74	186,700
		Sch. 40	.69	22.54	33.20	141,400

SEWER

Size	OD	SDR / Stiff-ness	Min. Wall (in)	Avg. ID (in)	Wt. (lb/ft)	Safe Pulling Force (lbs)
4"	4.22"	SDR 26	.16	3.87	1.35	5,700
6"	6.28"	SDR 26	.24	5.76	3.00	12,700
8"	8.40"	SDR 26	.32	7.72	5.41	22,900
10"	10.50"	SDR 26	.40	9.64	8.51	35,800
12"	12.50"	SDR 26	.48	11.48	12.15	50,800
15"	15.30"	SDR 26	.59	14.05	18.68	76,000
18"	18.70"	PS 115	.67	17.28	25.09	106,400
21"	22.05"	PS 115	.79	20.37	34.88	147,900
24"	24.80"	PS 115	.89	22.92	44.09	186,900
27"	27.95"	PS 115	1.00	25.83	56.01	237,500
30"	32.00"	PS 115	1.15	29.57	73.47	311,500
36"	38.30"	PS 115	1.37	35.39	105.2	445,900

D3034 sewer pipe available in SDR 35. F679 sewer pipe available in SDR 26, SDR 35, and PS 46. Inquire for sizes in PS 75.

Safe Pulling Force: Based on axial tensile stress of 7,000 psi with a safety factor of 2.5.

Fusible C-900®, Fusible C-905® and FPVC™ are available in a variety of colors including:

- Blue: potable water
- Green: sewer
- Purple: recycle, reclaim or reuse water
- White: raw water & storm water
  Gray: electrical conduit

Specifications for other sizes available upon request.

Pipe sold in 40' lengths: other lengths available on request.

More info available at www.undergroundsolutions.com

Pressure Ratings

Fusible C-900®		
Dimension Ratio	C900-97 (psi)	C900-07* (psi)
14	200	305
18	150	235
25	100	165
*when available		

Fusible C-905®	
Dimension Ratio	Pressure (psi)
18	235
21	200
25	165
32.5	125
41	100
51	80

IPS	
Dimension Ratio	Pressure (psi)
17	250
21	200
26	160

Schedule		
Size	Sch. 40 (psi)	Sch. 80 (psi)
4”	220	320
6”	180	280
8”	160	250
10”	140	230
12”	130	230
14”	130	230
16”	130	230
18”	130	230
20”	120	220
24”	120	210

Bend Radius

DIPS	
Size	Minimum Bend Radius
4"	100 ft.
6"	144 ft.
8"	189 ft.
10"	231 ft.
12"	275 ft.
14"	319 ft.
16"	363 ft.
18"	406 ft.
20"	450 ft.
24"	538 ft.
30"	667 ft.
36"	798 ft.

IPS	
Size	Minimum Bend Radius
4"	94 ft.
6"	138 ft.
8"	180 ft.
10"	224 ft.
12"	266 ft.
14"	292 ft.
16"	333 ft.
18"	375 ft.
20"	417 ft.
24"	500 ft.

Bend radius based on pipe OD.

PVC vs. HDPE

Property	Specification	PVC	HDPE	Difference
Tensile Strength (psi)	ASTM D-638	7,000	3,000	2.3X
Safe Pulling Stress (psi)		2,800	1,200	2.3X
Specific Gravity	ASTM D-1505	1.40	0.95	
Hydrostatic Design Basis at 73°F (psi)	ASTM D-2837	4,000	1,600	2.5X
Coefficient of Linear Expansion (in/in/°F)	ASTM D-696	0.3×10^{-4} (0.36”/100’/10°F)	1.2×10^{-4} (1.44”/100’/10°F)	0.25X
Modulus of Elasticity (psi)	ASTM D-785	400,000	110,000	3.6x

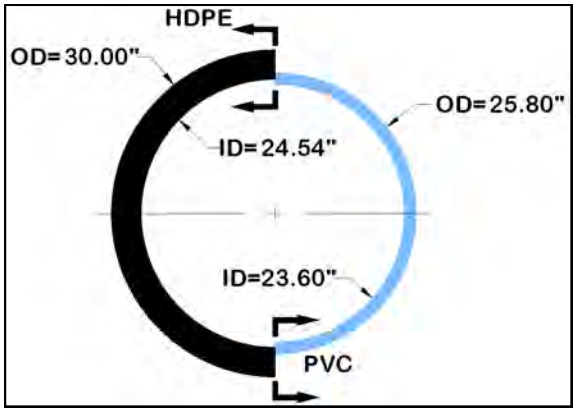

24” DR 25 Fusible C-905®
versus
30” DR 11 HDPE

	24” DR 25 PVC	30” DR 11 PE	% Change
OD (in)	25.8	30.0	+16%
HDD Bore Vol. (OD+12”, ft^3/ft)	7.79	9.62	+23%
Wall thickness (in)	1.03	2.73	+165%
I.D. (in)	23.6	24.5	(4%)
Pressure rating (psi)	165	160	+3%
Weight (lbs/ft)	56.2	101.9	+81%

Fusible PVC™ uses standard DIPS fittings.

The Patented Underground Solutions® Fusion Process

Fusion is performed by UGSI technicians and/or licensed and trained contractors. The patented fusion process consists of the following steps:

1. Pipe ends are precisely and securely aligned.
2. The fusion machine's dual cutting head faces and squares both ends of the PVC pipe simultaneously.
3. An electronically controlled heating element heats in preparation for fusion bonding the ends of the pipe forming a bead of fusible material.
4. After the pipe ends have been heated and the proper bead has developed, the heater plate is removed, and the pipe ends are brought together and held under pressure until the newly-formed joint cools.
5. Once the joint has cooled to the required conditions it can be moved or installed immediately.

Fusion times are comparable to other thermoplastic materials. Joints are fully restrained. Testing performed in accordance with F1674 and ASTM D-638 methods demonstrates that the tensile strength of the fused joint is equivalent to the tensile strength of the pipe.

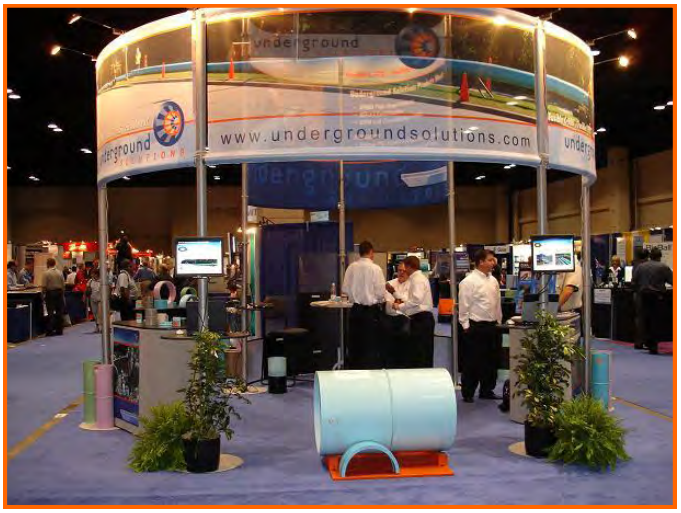

Customer Service Support:

- Engineering and technical support
- Budget preparation
- Project planning
- Fusion services & training
- Construction Management assistance

Fusible PVC™: The Most Tested PVC Pipe in the Industry

Test Categories	Vendor Qualification	Required Vendor Testing	UGSI Lot Acceptance Testing	Fusion Joint QC Data Collection & Retention
AWWA C900	●	●	●	
AWWA C905	●	●	●	
Extrusion Quality	●	●	●	
Mechanical Properties	●	●	●	
Process Control Points				●
Trained and Licensed Operators				●

Fusible PVC™ flattening

Beaufort, SC

Broomfield, CO

Seattle, WA

Sunnyvale, CA

Ottawa, Ontario

Des Moines Area, IA

Orlando, FL

Pittsburgh, PA

Kailua, HI

Contact Us

Underground Solutions, Inc.
13135 Danielson Street, Suite 201
Poway, CA 92064
Phone: 858-679-9551
Fax: 858-679-9555

OR

Underground Solutions, Inc.
230 Executive Drive, Suite 110
Cranberry Twp, PA 16066
Phone: 724-353-3000
Fax: 724-353-3020

www.undergroundsolutions.com

For your local sales office, please contact one of the locations above or consult our website.

Underground Solutions, Inc. (UGSI) provides infrastructure technologies for water and wastewater applications. UGSI's Fusible PVC™ products, including **Fusible C-900®, Fusible C-905® and FPVC™**, contain a proprietary PVC formulation that, when combined with UGSI's patented fusion process, results in a monolithic, fully-restrained, gasket-free, leak-free piping system. UGSI's **Duraliner™** is a patented, close-fit pipeline renewal system creating a stand-alone structural liner.

Underground Solutions®, Fusible PVC™, Fusible C-900®, Fusible C-905®, FPVC™ and Duraliner™ are trademarks of Underground Solutions, Inc.
Underground Solutions, Inc. does business in California as UGSI, Inc.
©2009 Underground Solutions, Inc. All Rights Reserved.

underground SOLUTIONS®

Fusible PVC Pipe Material Specification

Fusible C-900®, Fusible C-905®, FPVC®, and Fusible PVC™
FUSIBLE POLYVINYLCHLORIDE PIPE MATERIAL SPECIFICATION

PART 1 –GENERAL

1.01 DESCRIPTION

A SCOPE

1. This material specification covers requirements of fusible polyvinylchloride pipe, including Fusible C-900®, Fusible C-905®, and FPVC®.
2. Pipe shall conform to the following dimensionality and properties table:

Pipe Description	Nominal Diameter (in.)	DR	Color	Pressure Class (psi)	Required Inner Diameter (in.)

1.02 QUALITY ASSURANCE

A REFERENCES

1. References indicated shall mean the latest revision or issuance, unless specifically indicated in the table below:

Reference	Title
AWWA C900	Standard for Polyvinyl Chloride (PVC) Pressure Pipe and Fabricated Fittings, 4 in. through 12 in. (100mm Through 300mm), for Water Distribution
AWWA C905	Standard for Polyvinyl Chloride (PVC Pressure Pipe and Fabricated Fittings, 14 in. through 48 in. (350mm Through 1200mm), for Water Distribution and Transmission
AWWA M23	AWWA Manual of Supply Practices PVC Pipe—Design and Installation, Second Edition
ASTM D1784	Rigid Poly (Vinyl Chloride) (PVC) Compounds and Chlorinated Poly (Vinyl Chloride) (CPVC) Compounds
ASTM D1785	Poly (Vinyl Chloride) (PVC) Plastic Pipe, Schedules 40, 80, and 120
ASTM D2152	Test Method for Degree of Fusion of Extruded Poly(Vinyl Chloride) (PVC) Pipe and Molded Fittings by Acetone Immersion
ASTM D2241	Poly (Vinyl Chloride) (PVC) Plastic Pipe (SDR-PR)
ASTM D3034	Standard Specification for Type PSM Poly(Vinyl Chloride) (PVC) Sewer Pipe and Fittings
ASTM F679	Standard Specification for Poly(Vinyl Chloride) (PVC) Large Diameter Plastic Gravity Sewer Pipe and Fittings
NSF-14	Plastics Piping System Components and Related Materials
NSF-61	Drinking Water System Components--Health Effects
PPI TR-2	PVC Range Composition Listing of Qualified Ingredients

B MANUFACTURER REQUIREMENTS

1. All piping shall be made from a PVC compound conforming to cell classification 12454 per ASTM D1784.

C FUSION TECHNICIAN REQUIREMENTS

1. Fusion Technician shall be qualified by the pipe supplier to install fusible polyvinylchloride pipe of the type(s) and size(s) being used. Qualification shall be current as of the actual date of fusion performance on the project.

D SPECIFIED PIPE SUPPLIERS

1. Fusible polyvinylchloride pipe shall be used as manufactured under the trade names Fusible C-900®, Fusible C-905®, and FPVC®, for Underground Solutions, Inc., Poway, CA, (858) 679-9551. Fusion process shall be as patented by Underground Solutions, Inc., Poway, CA, Patent No. 6,982,051.

E WARRANTY

1. The pipe shall be warranted for one year per the pipe supplier's standard terms.
2. In addition to the pipe warranty, the fusion services shall be warranted for one year per the fusion service provider's standard terms.

PART 2 – PRODUCTS

2.01 FUSIBLE POLYVINYLCHLORIDE PIPE

A Fusible polyvinylchloride pipe for potable water shall conform to AWWA C900, AWWA C905, ASTM D2241 or ASTM D1785, as applicable. Testing shall be in accordance with the referenced AWWA standards for all pipe types. Pipe shall be marked verifying suitability for potable water service per NSF-61.

B Fusible polyvinylchloride pipe for non-potable water or pressurized wastewater not conforming to AWWA C905 dimensionality shall conform to AWWA C900, ASTM D2241 or ASTM D1785 for standard dimensionality, as applicable. Testing shall be in accordance with the referenced AWWA standards.

C Fusible polyvinylchloride pipe for non-potable water or pressurized wastewater conforming to AWWA C905 dimensionality shall conform to AWWA C905.

D Fusible polyvinyl chloride pipe for non-pressure storm or wastewater not conforming to AWWA C905 dimensionality shall conform to ASTM D3034, ASTM F679, AWWA C900, ASTM D2241, or ASTM D1785 for standard dimensions, as applicable. Testing shall be in accordance with the applicable standard used.

E Fusible polyvinylchloride pipe for non-pressure storm or wastewater conforming to AWWA C905 dimensionality shall conform to AWWA C905.

F Fusible polyvinylchloride pipe shall be extruded with plain ends. The ends shall be square to the pipe and free of any bevel or chamfer. There shall be no bell or gasket of any kind incorporated into the pipe.

G Fusible polyvinylchloride pipe shall be manufactured in a standard 40' nominal length or custom lengths as specified.

H Fusible polyvinylchloride pipe shall be blue in color for potable water use. Fusible polyvinylchloride pipe shall be purple in color for reclaim, reuse, or other non-potable use. Fusible polyvinylchloride pipe shall be green in color for wastewater use. Fusible polyvinylchloride pipe shall be white in color for surface or storm water use.

I Pipe shall be marked as follows:

1. Nominal pipe size
2. PVC
3. Dimension Ratio, Standard Dimension Ratio or Schedule
4. AWWA pressure class, or standard pressure rating for non-AWWA pipe, as applicable
5. AWWA standard designation number, or pipe type for non-AWWA pipe, as applicable
6. Extrusion production-record code
7. Trademark or trade name
8. Cell Classification 12454 and/or PVC material code 1120 may also be included

J Pipe shall be homogeneous throughout and be free of visible cracks, holes, foreign material, blisters, or other visible deleterious faults.

2.02 FUSION JOINTS

A Unless otherwise specified, fusible polyvinylchloride pipe lengths shall be assembled in the field with butt-fused joints. The fusion technician shall follow the pipe supplier's guidelines for this procedure. All fusion joints shall be completed as described in this specification.

2.03 FUSIBLE POLYVINYL CHLORIDE SWEEPS OR BENDS

A Fusible polyvinyl chloride sweeps or bends shall conform to the same sizing convention, diameter, dimensional tolerances and pressure class of the pipe being joined by the sweep or bend.

B Fusible polyvinyl chloride sweeps or bends shall be manufactured from the same fusible polyvinyl chloride pipe being used for the installation, and shall have at least 2 feet of straight section on either end of the sweep or bend to allow for fusion of the sweep to the pipe installation. There shall be no gasketed connections utilized with a fusible polyvinyl chloride sweep.

C Standard fusible polyvinyl chloride sweep or bend angles shall not be greater than 22.5 degrees, and shall be used in nominal diameters ranging from 4 inch through 16 inch.

PART 3 - EXECUTION

3.01 HANDLING AND STORAGE

A Pipe shall be off-loaded, loaded, installed, handled, stored and stacked per the pipe supplier's guidelines. These guidelines include compliance with the minimum recommended bend radius and maximum safe pull force for the specific pipe being used.

B The general best practices of the industry per AWWA M23 shall also be observed.

3.02 FUSION PROCESS

A Fusible polyvinylchloride pipe will be handled in a safe and non-destructive manner before, during, and after the fusion process and in accordance with this specification and pipe supplier's guidelines.

B Fusible polyvinylchloride pipe will be fused by qualified fusion technicians holding current qualification credentials for the pipe size being fused, as documented by the pipe supplier.

C Pipe supplier's procedures shall be followed at all times during fusion operations.

D Each fusion joint shall be recorded and logged by an approved electronic monitoring device (data logger) connected to the fusion machine, which utilizes a current version of the pipe supplier's recommended and compatible software.

E Only appropriately sized and outfitted fusion machines that have been approved by the pipe supplier shall be used for the fusion process. This includes requirements for safety, maintenance, and operation with modifications made for PVC.

3.03 GENERAL INSTALLATION

A Installation guidelines from the pipe supplier shall be followed for all installations.

B The fusible polyvinylchloride pipe will be installed in a manner so as not to exceed the recommended bending radius guidelines.

C Where fusible polyvinylchloride pipe is installed by pulling in tension, the recommended maximum safe pulling force, established by the pipe supplier, shall not be exceeded.

END OF SECTION

Proposal for a Two Year Water Loss Control Program for the City of Folsom Utilities Department

Proposal

for a

Two Year Water Loss Control Program

for the

City of Folsom Utilities Department

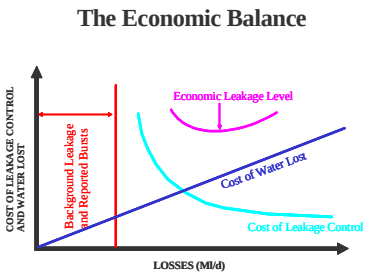

WSO

Water Systems Optimization, Inc
233030th Street, San Francisco, CA 94131

Water Systems Optimization, Inc.
233 30th Street
San Francisco CA 94131
United States of America
Tel: 1-415-538-8641
Fax: 1-814-286-61705752

March 12, 2010

Kyle Ericson
Senior Engineer/Compliance Officer
Utilities Department
City of Folsom
50 Natoma Street
Folsom, CA 95630

Dear Mr. Ericson

ROPOSAL – TWO YEAR WATER LOSS CONTROL PROGRAM

Water Systems Optimization, Inc. (WSO) is pleased to provide this proposal to conduct a Two Year Water Loss Control Program for the City of Folsom Utilities Department (CFUD). In choosing a partner to provide assistance for water loss control and management efforts, it is essential to choose a company that has proven technical expertise in this specialized field, that has a detailed understanding of the water loss management challenges CFUD faces, and that has a proven track record of successfully completed water loss control programs. WSO believes that we are ideally positioned to provide the best service and advice due to our undoubted detailed understanding of CFUD's water loss challenges, our track record of successfully implemented water loss control programs and our commitment to providing service excellence. The proposed Two Year Water Loss Control Program will reduce leakage losses in the CFUD distribution system to optimum levels. Based on currently available data it is estimated that this program will result in significant cost savings for CFUD, which are conservatively estimated to be in the range of $1.4M per year once the program is completed.
WSO is highly specialized in water loss management and has carried out many successful district measurement and leak detection survey contracts for water utilities across North America. Our ability to perform the work, our staff experience and our past performance record are without question as can be vouched for by our many satisfied clients and the number of repeat contracts we regularly win with those clients.

Please find enclosed our Proposal for a Two Year Water Loss Control Program. If you have any questions, feel free to contact me at 1-415-538-8641 or by e-mail at reinhard.sturm@wso.us.

Sincerely,

Reinhard Sturm
Vice President - WSO

Table of Contents

1 TWO YEAR WATER LOSS CONTROL PROGRAM 1

1.1 BACKGROUND AND GOAL OF THE WATER LOSS CONTROL PROGRAM 1

2 WATER LOSS CONTROL PROGRAM TASKS 4

KICK-OFF AND SHAREHOLDER MEETING 4

2.1 TASK ONE – INITIAL COMPREHENSIVE LEAK DETECTION CAMPAIGN 4

2.2 TASK TWO – INITIAL BOTTOM-UP DMA MEASUREMENTS IN ZONE1 AND ZONE4,5,6 5

2.2.1 Subtask Two-A) – Field Tests to Verify Zone Integrity of Zone1 and Zone4,5,6 5

2.2.2 Subtask Two-B) – Convert Zone1 and Zone 4,5,6 Into Permanent DMA 5

2.2.3 Subtask Two-C) – Initial Leakage Level Measurement in DMA Zone1 and Zone4,5,6 .. 6

2.2.4 Subtask Two-D) – Comparison of Initial Leakage Levels Against Water Audit Results. 8

2.2.5 Subtask Two-E) – Quantify Savings Achieved Through Initial Leak Detection Campaign 8

2.2.6 Subtask Two-F) – Design and Pilot Leakage Monitoring System for DMA Zone1 and Zone4,5,6 9

2.3 TASK THREE – SECOND ROUND OF COMPREHENSIVE LEAK DETECTION CAMPAIGN 9

2.4 TASK FOUR – FINAL BOTTOM-UP DMA MEASUREMENTS IN ZONE1 AND ZONE4,5,6 9

2.4.1 Subtask Four-A) – Final Leakage Level Measurement in DMA Zone1 and Zone4,5,6 .. 9

2.4.2 Subtask Four-B) – Quantify Savings Achieved Through second Round of Leak Detection 9

2.4.3 Subtask Four-C) – Calculate Background Leakage in DMA Zone1 and Zone4,5,6 and Extrapolate to Rest of System 9

2.5 TASK FIVE – CONVERT ZONE 2 AND ZONE 3 INTO PERMANENT DMA 10

2.6 TASK SIX – DESIGN AND IMPLEMENT DATA ANALYSIS AND MANAGEMENT SYSTEM FOR LEAKAGE MONITORING IN ALL DMAS 10

2.7 TASK SEVEN – ASSESS POTENTIAL FOR SUBDIVIDING ZONE 2 INTO TWO DMA AND SUBDIVIDE IF POSSIBLE 10

2.8 TASK EIGHT – PRESSURE MANAGEMENT 11

2.8.1 Subtask Eight-A) – Collect and Evaluate Pressure and Flow Data from all DMAs 11

2.8.2 Subtask Eight-B) – Design Advanced Pressure Management Schemes 12

2.8.3 Subtask Eight-C) – Pilot Advanced Pressure Management in One DMA 12

2.8.4 Subtask Eight-D) – Full Scale Implementation of Advanced Pressure Management ... 12

2.9 TASK NINE – CALCULATE ECONOMIC LEAKAGE INTERVENTION LEVEL FOR EACH DMA 12

2.10 TASK TEN – TRAINING OF CFUD PERSONNEL ON WATER LOSS MANAGEMENT, DATA HANDLING AND DATA MANAGEMENT 13

2.11 TASK ELEVEN – PROJECT MANAGEMENT OF ENTIRE WATER LOSS CONTROL PROGRAM 13

2.11.1 Subtask Eleven–A) Preparation of Monthly Progress Reports 13

2.11.2 Subtask Eleven–B) Preparation of Draft and Final Report 13

3 INTRODUCTION TO WATER SYSTEMS OPTIMIZATION, INC. 15

4 STAFF RESUMES 16

4.1 STEPHEN PRESTON – PRESIDENT - WSO 16

4.2 REINHARD STURM – VICE PRESIDENT - WSO 17

4.3 ISABEL SZENDREY P.E. – JR. PROJECT MANAGER 18

5 BUDGET AND TIMELINE 19
5.1 BUDGET YEAR ONE 19
5.2 BUDGET YEAR TWO 20
5.3 TOTAL BUDGET FOR TWO YEAR WATER LOSS CONTROL PROGRAM 21
5.4 TIMELINE 22
5.5 ASSIGNED PERSONNEL 23

Appendix A - Proposed Equipment Information for Leak Detection and Flow and Pressure Measurements

Appendix B - Example Leak Repair Form

1 TWO YEAR WATER LOSS CONTROL PROGRAM

1.1 Background and Goal of the Water Loss Control Program

The results of a Water Audit (WA) and component analysis of real losses, carried out by WSO for Calendar Year 2008, indicate that CFUD is losing a significant amount of water in its distribution network through physical losses (Real Losses). Real losses are currently estimated to be in the order of 2,699MG. The monetary value of the real loss volume based on discussions with CFUD key stakeholders is $450/AF ($1,351 per MG), which reflects the cost for water supply, operations, and distribution of one AF of treated water (see Table 1-1). This is an appropriate valuation of real losses given the current supply and demand situation in CFUD. The avoided cost of water which the California Urban Water Conservation Council (CUWCC) recommends using for evaluating water conservation programs, would be significantly higher than the cost used to value real losses for CFUD.

Table 1-1 CFUD Water Loss Performance Indicators and Cost of Real Losses

	Total Real Losses [MG]	Total Real Losses [gal/serv con/day]	UARL [MG]	ILI	Cost of Real Losses
2008 Water Audit (WA) Results	2,699	419	118	22.9	$3,727,319
Conservative Real Loss Estimates (50% of 2008 WA results)	1,350	210	118	11.4	$1,863,660
Target Level of Real Loss Volume	337	52	118	2.9	$465,915

Based on the valuation discussed above the CFUD is currently losing about $3.7M in real losses. However, since residential consumption was not metered in 2008 the WA results might overestimate real losses. When taking a very conservative approach and assuming that real losses are 50% less than calculated in the 2008 WA, real losses are still costing CFUD about $1.86M (equals about $5,000/day). This clearly highlights the immediate need for action to start reducing real losses in the system and therefore reducing the financial losses CFUD currently occurs.

Based on the work carried out by WSO in other California water utilities and throughout the United States it is reasonable to argue that, given the supply and demand situation CFUD is facing, that the target real loss volume for CFUD should be around 337 MG/Year or 52 gallons/service connection/day, or an Infrastructure Leakage Index (ILI) of around 3. Reducing Real Losses to 337MG (ILI 3), which is a very realistic goal for a water loss control program, would mean that the cost for water lost due to leakage in the distribution system is reduced from $1.86M/Year to about $0.46M/Year. Therefore, it can be expected that the water loss control program outlined by WSO in this proposal will achieve real loss savings of about 1,000MG/Year, with monetary savings of about $1.4M/Year. Not only will the water loss control program provide immediate cost savings but it will also provide CFUD with an additional 1,000MG/Year that can be used to provide water to new customers and to offset

needs for more aggressive demand side conservation. Furthermore, this water loss program will help CFUD significantly in meeting Governor Schwarzenegger's goal to achieve a 20 percent reduction in per capita urban water use by 2020.

The Water Loss Control Program outlined in this proposal was designed to provide the CFUD with the following key benefits:

- Reduction of leakage losses to economic levels providing savings of around $1.4M/Year after completion of the program.
- Implementation of a water loss control program that achieves the targeted real loss reduction in a sustainable manner.
- Provide CFUD with the water loss management tools and training necessary to maintain the optimized real loss volume.
- Increase the lifespan of infrastructure and reduce background leakage through the optimization of pressure management.

WSO has implemented a similar water loss control program, as outlined in this proposal, in an area of the Philadelphia Water Department (PWD) distribution network between 2006 and 2009. The area that was targeted by the 3 year water loss control program has about 2,500 service connections and had pre-intervention real losses of around 550/gallons/service connection/day (in 2005), a water loss problem very similar in scale to the one CFUD is currently facing. After completion of the 3 year water loss control program the real losses were sustainably reduced by about 1.2MGD to real losses of 44gal/service connection/day (see Figure 1-1). PWD achieved sustainable savings of about $100,000/Year in this one target area through the successful implementation of WSO' water loss control program.

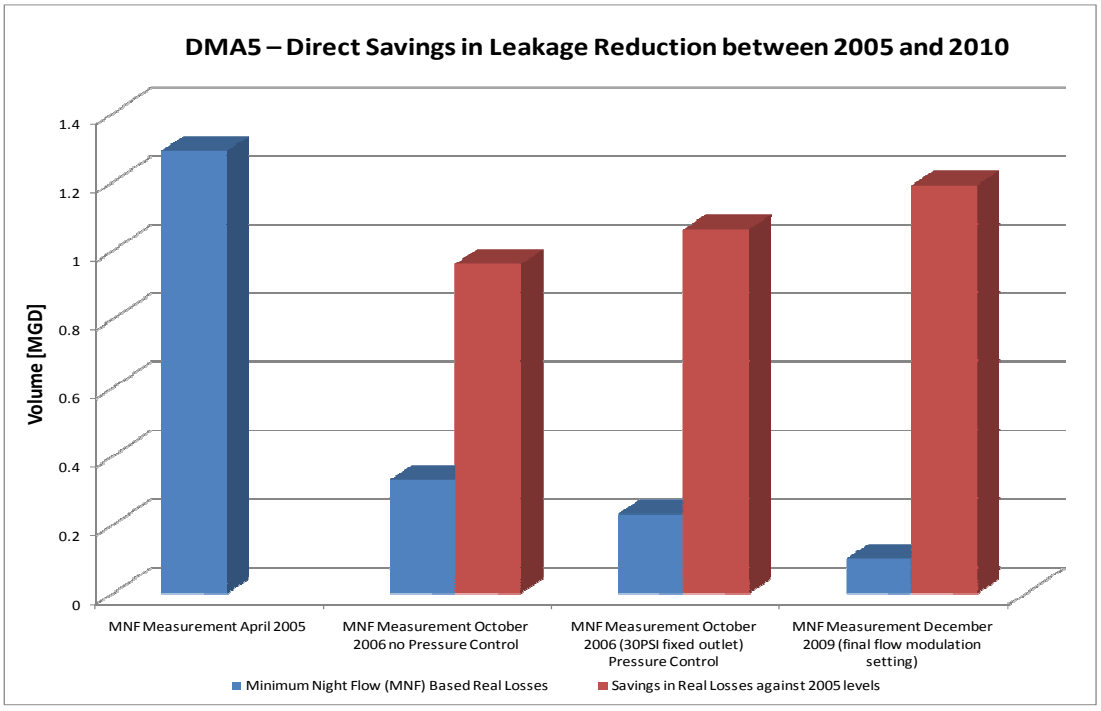

Figure 1-1 Results of a Water Loss Control Program Implemented by WSO for the PWD

The following sections provide the proposed outline of the CFUD two year water loss control program and the related costs.

2 WATER LOSS CONTROL PROGRAM TASKS

The following tasks are necessary to successfully implement the proposed water loss control program.

Kick-off and Shareholder meeting

CFUD will develop a list of key personnel for this project, which will hereafter be referred to as the Project Team. A kick-off meeting will be held to discuss the objectives and components of the Two Year Water Loss Control Program. Following the kick-off meeting several meetings will be held with the Project Team, which will include staff from:

- Customer Services/Billing
- Water Production and Distribution
- Water Services Engineering and Technical Support

A priority list of goals will be prepared to ensure that the key objectives of the Project Team are identified. The Project Team will be involved in the approval of all water loss management implementations and analysis and approval of all findings throughout the program.

2.1 Task One – Initial Comprehensive Leak Detection Campaign

The financial analyses have shown that real losses are costing CFUD about $5,000 per day. Therefore it is necessary to start the initial round of leak detection right after the project kick-off.

The Leak Detection Survey will utilize state-of-the-art portable acoustic leak detection equipment and Leak Noise Correlators. Technical specifications of the equipment that WSO proposes to use are provided in Appendix A.

The entire distribution system (276 miles) will be checked, by performing an initial sweep of the system by sounding all fire hydrants, valves and meters for leak indications. The listening points will be no more than 500 feet apart to ensure that potential leak sounds are not missed.

Once an area has been sounded, the places where leak indications were located will be investigated to determine if a leak does, in fact, exist in that area. During the initial sweep, if a leak indication is significant enough to indicate a leak that might cause damage to private or public property; the initial sweep will be halted while the leak is pinpointed.

Once a leak has been pinpointed, it will be marked on the pavement at the closest convenient point and a leak report will be prepared. The leak report will include a sketch of the leak location along with an estimate of the type of leak, size of leak and its severity, date and time of detection and other information. The leak report will be recorded on a database maintained by WSO before being issued to CFUD for repair action. An example leak report is included at Appendix B.

After the leak has been repaired, CFUD will notify WSO of the date and time of repair and the type and size of leak repaired. This is used to compare the performance of the leak detection team in assessing the type of leak before it is excavated and to fine tune the water loss control program. The leak database is updated with the information so as to provide an

ongoing assessment of the number and types of leaks being detected and repaired and to provide an estimation of the amount of leakage that has been recovered in each survey area.

Weekly leak summary reports will be provided detailing the miles of main surveyed, number of leaks pinpointed, classification of leaks and estimated leak rates. Monthly interim progress reports will be prepared detailing the progress to date.

2.2 Task Two – Initial Bottom-Up DMA Measurements in Zone1 and Zone4,5,6

In parallel to Task One, WSO will commence work on converting Zone1 and combined Zones4,5,6 into permanent District Metered Areas (DMA). A DMA is an area in the water distribution system which is specifically defined by the closure of valves and in which the water entering the district can be measured and quantified.

2.2.1 Subtask Two-A) – Field Tests to Verify Zone Integrity of Zone1 and Zone4,5,6

Together with CFUD the hydraulic integrity of pressure Zone1 and Zone4,5,6 will be verified through field tests. In case this task finds that zone boundary valves are not closing properly it might be necessary to redesign the zone boundary or replace the boundary valve.

2.2.2 Subtask Two-B) – Convert Zone1 and Zone 4,5,6 Into Permanent DMA

Most water utilities in the United States, such as CFU, practice *reactive* leakage management by responding to leaks and water main breaks only after they have erupted and caused customer complaints; i.e., reported events. This approach causes a gradually rising backlog of hidden leaks that will eventually lead to very high leakage levels as currently seen in CFUD. A growing number of water utilities, however, practice *proactive* leakage management by seeking to identify and repair hidden leaks while they are small and benign, i.e. while they exist in the unreported state. By employing a DMA based leakage management approach a water utility has the ability to accurately assess leakage levels in each DMA, monitor the occurrence of new leaks in a DMA, and intervene against leakage in a DMA only when leakage rises beyond an economic intervention threshold.

For a zone to serve the purpose of a DMA it is necessary to permanently monitor supply into the DMA, zone pressure and customer consumption. WSO together with CFUD will convert pressure Zone1 into a DMA and Zones 4,5,and 6 will need to be combined into one DMA with the supply to the DMA monitored at the inflow point that supplies all three pressure zones. In addition to the flow data, pressure measurements will be recorded with pressure loggers at the DMA inlet points, the average pressure points and the critical pressure points. See Figure 2-1 for an example of DMA flow and pressure data recorded in of Nashville Metro Water Services DMA.

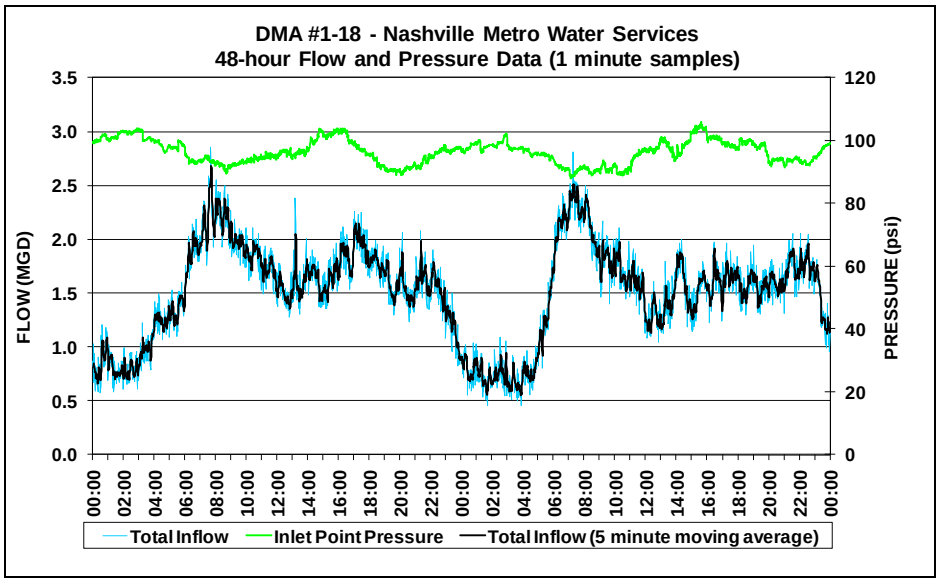

Figure 2-1 Example Flow and Pressure Data from District Measurement

2.2.3 Subtask Two-C) – Initial Leakage Level Measurement in DMA Zone1 and Zone4,5,6

The primary tool for determining leakage levels in a DMA is the Minimum Night-time Flow (MNF) Analysis method. In theory, the use of water by registered customers reduces to a minimum during the night hours (typically between 3am and 4am). This can be seen from the DMA inflow data in Figure 2-1. At the minimum night-time flow point, there will be two main components to the inflow to the District; usage by customers and leakage from the mains and service lines. The consumption recoded by CFUD Automated Meter Reading (AMR) system will provide the customer usage component. By subtracting the customer usage from the District inflow, the remaining leakage component is calculated. By considering the correlation between pressure and leakage it is possible to model the leakage losses over a 24hour period (see Figure 2-2).

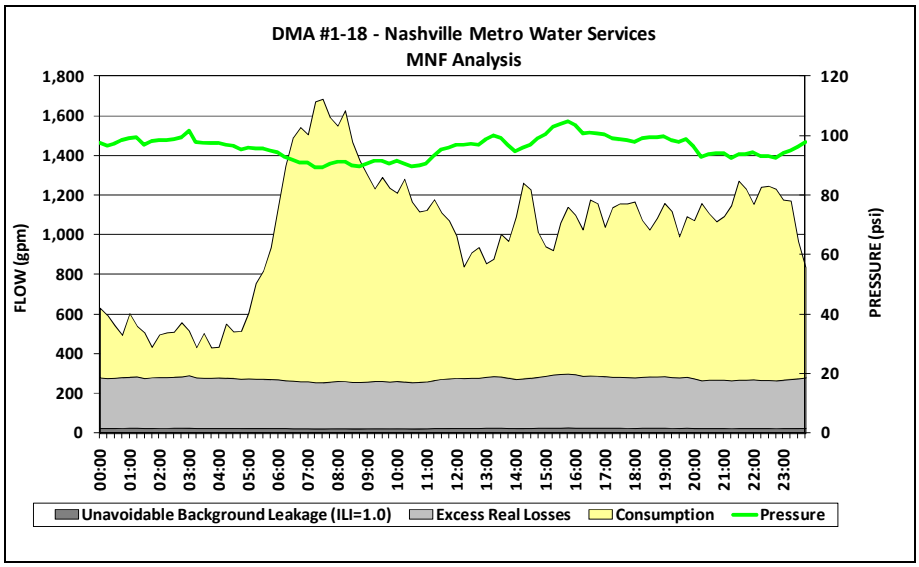

Figure 2-2 MNF Analysis of Flow and Pressure Data from a DMA

By converting Zone1 and Zone4,5,6 into permanent DMAs, leakage levels will be continuously monitored. The initial leakage level measurements will be carried out before the first round of leak detection takes place in Zone1 and Zone4,5,6 in order to quantify a leakage baseline for those two DMAs. WSO will be able to exactly quantify how much water is lost due to leakage in Zone1 and Zone4,5,6 and how much of those leakage losses can be recovered through sonic leak detection (Figure 2-3).

MNF ANALYSIS RESULTS SUMMARY FOR DMA #1-18

Measurement Date	Aug 12, 2009	
Day	Wednesday	
Number of Service Connections	nr.	2,464
Miles of mains	miles	32.09
Service Connection Density	nr. / mile	77
Average Pressure over 24 hours	psi	96.0
Pressure at Minimum Night Flow	psi	98.0
Hour-Day Factor		23.5
Minimum Night Flow	gpm	436
Night-time Consumption	gpm	154
Net Night Flow	gpm	282

		Best Estimate	Upper Range	Lower Range
Total Inflow	MGD	1.468	1.468	1.468
Total Real Losses	MGD	0.398	0.402	0.394
	g/conn/d	161.4	163.0	159.8
	g/conn/d/psi	1.68	1.70	1.66
	of Total Inflow	27.1%	27.4%	26.8%
	ILI	7.11	7.19	7.05
Unavoidable Background Real Losses	MGD	0.038	0.038	0.038
(ILI = 1.0)	g/conn/d	15.4	15.5	15.2
	g/conn/d/psi	0.16	0.16	0.16
Excess Real Losses	MGD	0.360	0.363	0.356
	g/conn/d	146.0	147.5	144.5
	g/conn/d/psi	1.52	1.54	1.51
Consumption	MGD	1.070	1.066	1.074
	g/conn/d	434.4	432.7	435.9
	of Total Inflow	72.9%	72.6%	73.2%

Figure 2-3 Tabulated MNF Analysis Report

2.2.4 Subtask Two-D) – Comparison of Initial Leakage Levels Against Water Audit Results

The initial leakage level measurements in Zone1 And Zone4,5,6 will be compared against the results of the system wide 2008 water audit. This will provide a better understanding of the leakage losses in the entire distribution system and will also provide valuable information for the entire water loss control program.

2.2.5 Subtask Two-E) – Quantify Savings Achieved Through Initial Leak Detection Campaign

Since leakage levels can now be quantified on a daily bases it will be possible for WSO to monitor and quantify the reduction in leakage losses achieved through the initial leak detection and repair campaign in Zone1 and Zone4,5,6.

2.2.6 Subtask Two-F) – Design and Pilot Leakage Monitoring System for DMA Zone1 and Zone4,5,6

WSO will develop and pilot a proprietary software for CFUD that automates the calculation of leakage levels from DMA inflow, pressure and consumption data for Zone1 and Zone4,5,6. The software will automate the leakage level calculations for Zone1 and Zone4,5,6 and provide the results in a standardized report format.

2.3 Task Three – Second Round of Comprehensive Leak Detection Campaign

Since leakage losses are high in the CFUD distribution system it will definitely be necessary to repeat a full system wide leak detection campaign after completion of the first leak detection sweep. The entire distribution system (276 miles) will be checked again by performing a second sweep of the system by sounding all fire hydrants, valves and meters for leak indications. The listening points will be no more than 500 feet apart to ensure that potential leak sounds are not missed. This will serve to identify leaks that were masked by larger leaks during the first sweep, leaks that developed on already weak sections of the infrastructure once a nearby leak repair has caused local system pressure to increase and in general to make sure that the entire backlog of hidden leaks is removed from the distribution system. The same approach and the same type of leak detection equipment as outlined in section 2.1 will be used.

2.4 Task Four – Final Bottom-Up DMA Measurements in Zone1 and Zone4,5,6

2.4.1 Subtask Four-A) – Final Leakage Level Measurement in DMA Zone1 and Zone4,5,6

After completion of the second sweep of system wide leak detection and once all detected leaks have been repaired in DMA Zone1 and Zone4,5,6 the final leakage level will be measured and calculated using the approach outlined in section 2.2.3.

2.4.2 Subtask Four-B) – Quantify Savings Achieved Through second Round of Leak Detection

Since leakage levels can now be quantified on a daily bases it will be possible for WSO to monitor and quantify the reduction in leakage losses achieved through the second round of leak detection and repair campaign in Zone1 and Zone4,5,6. This analysis will serve to quantify the minimum leakage level than can be achieved through leak detection in DMA Zone1 and Zone4,5,6. Any additional leakage reduction will need to be achieved through pressure management or through a much more costly option, infrastructure replacement.

2.4.3 Subtask Four-C) – Calculate Background Leakage in DMA Zone1 and Zone4,5,6 and Extrapolate to Rest of System

After all detectable leaks were removed from DMA Zone1 and Zone4,5,6 the remaining leakage volume will be assessed by WSO. This volume is by definition due to background leakage. Background leakage represents the collective weeps and seeps across the distribution system at joints and on customer service connections. Background leakage is not acoustically detectable, but is pressure sensitive and is addressed by improved pressure management or through pipeline rehabilitation or replacement. The older or weaker the infrastructure is the higher is the volume of background leakage. It is therefore paramount for a successful leakage management strategy to understand and quantify the volume of

background leakage, since any additional expenditure on leak detection efforts will not result in a further reduction of leakage losses if they are made up by background leakage.
WSO will use the background leakage results from DMA Zone1 and Zone4,5,6 to extrapolate the system wide background leakage volume.

2.5 Task Five – Convert Zone 2 and Zone 3 Into Permanent DMA

To achieve efficient water loss control and management in the entire distribution network, Zones 2 and 3 will be converted into permanent DMAs using the same approach as outlined in sections 2.2.1 2.2.2.

2.6 Task Six – Design and Implement Data Analysis and Management System for Leakage Monitoring in all DMAs

Once all DMAs are in place, covering the entire CFUD distribution system, it will be necessary to design a data management and analysis system capable of managing all the water loss management relevant data from each DMA. This data will include supply data to each DMA, consumption data from each DMA, and pressure data from each DMA. WSO will expand the leakage monitoring system designed for DMA Zone1 and Zone 4,5,6 to the rest of the DMAs. This system will be tailored to CFUD's data needs and WSO will solicit input from CFUD throughout the design and implementation phase to accommodate all of CFUD water loss data management needs.

The final version of the data analysis and management system for leakage monitoring will provide CFUD with an automated way of processing and managing all the water loss management relevant data, providing daily or weekly reports on leakage levels in each DMA. The system will also provide decision tools on how to react to rising leakage levels in a DMA. The leakage management system will include the results of Task 9 - The economic leakage intervention level of each DMA. For each DMA there will be a leakage intervention trigger level. Once the leakage monitoring system detects DMA leakage rising above this level, the system will recommend that CFUD reduces leakage in the DMA through leak detection and repair back to economic optimum leakage levels.

This system will be the primary tool for CFUD to successfully sustain the low leakage levels achieved by the two year water loss control program.

2.7 Task Seven – Assess Potential for Subdividing Zone 2 into two DMA and Subdivide if Possible

For efficient leakage monitoring and management through the DMA approach the industry best practice recommends the size of a DMA to be less than 5,000 service connections. If a DMA has more than 5,000 service connections then it becomes more difficult to discern new leaks from the legitimate customer consumption. Task 7 will therefore assess the potential for subdividing DMA Zone2 into two separate DMAs. If the assessment finds it feasible to subdivide DMA Zone 2, then WSO together with CFUD will subdivide DMA Zone2 into two separate DMAs.

2.8 Task Eight – Pressure Management

It is intuitive that more water escapes from a given pipeline leak if pressure exists at a high level vs. conditions with lower pressure. Pressure management is defined as "The practice of managing system pressures to an optimum level of service ensuring sufficient and efficient supply to legitimate uses and consumers, while eliminating or reducing pressure transients and variations, faulty level controls and reducing unnecessary or excess pressures, all of which cause the distribution system to leak and break unnecessarily". The primary goals of pressure management for leakage control and infrastructure sustainability are:

- Reduction in flow rates from reported and unreported leaks
- Reduction in flow rates from background leakage; the only other option to control background leakage is full pipeline rehabilitation/replacement
- Reduction in the frequency of new breaks occurring within a water distribution system
- Inhibiting pressure surges and transients in the pressure managed area

Two primary modes of pressure control have become prevalent in pressure managed areas throughout the world: fixed outlet pressure control and flow modulated pressure control. In fixed outlet control, the PRV provides a constant lower downstream (outlet) in the presence of higher, varying upstream (inlet) pressure. Fixed outlet hydraulic pressure control is a traditional and reliable method of pressure control and uses a basic PRV. This method is effective for areas with uniform supply characteristics, low head losses and low water demands which do not vary greatly. In contrast, flow modulated pressure control paces the PRV outlet pressure level with changes in flow/demand. As flow increases due to greater water demand, a controller increases outlet pressure at the PRV. As flow decreases, the controller reduces the PRV outlet pressure. In flow modulated control mode, the lowest safe pressure is provided at the time of the lowest flow, and the highest safe pressure is provided at the highest flow; thereby pressure is optimized. Hence, the daily high pressure is provided when customer demand is high, and the daily low pressure occurs when customer demand is low (at night) and leakage is at its highest proportion of the total flow. If a large water demand emerges due to fire fighting, water main break or other emergency, flow modulated pressure control provides additional pressure to meet the demand. This is a stark improvement over typical conditions in water distribution systems, where water pressure drops (often to dangerous levels) when a high emergency water demand occurs. Flow modulated pressure control also has the effect of leveling out pressures at the system extremities therefore helping to reduce the number of breaks that occur on the weaker parts of the system.

In this task WSO will assess the potential for optimizing CFUD's distribution system pressure management in order to further reduce system leakage and extend infrastructure life.

2.8.1 Subtask Eight-A) – Collect and Evaluate Pressure and Flow Data from all DMAs

In addition to the flow data recorded for each DMA, pressure will be recorded by pressure loggers installed at the district inlet point, the average pressure point and the critical pressure

point. The pressure data will be recorded over several months and then analyzed and evaluated for potential to improve current system pressure management.

In addition in order to assess whether the system is subject to pressure spikes and transients which are a primary cause for leaks and breaks, WSO will deploy Telog HR31 Hydrant Pressure Recorders to record system pressure at a sample rate of ¼ second intervals (4 samples per second).

2.8.2 Subtask Eight-B) – Design Advanced Pressure Management Schemes

Advanced pressure management schemes will be designed for each of the DMAs based on the results of Subtask Eight-A.

2.8.3 Subtask Eight-C) – Pilot Advanced Pressure Management in One DMA

Advanced pressure management will be implemented by WSO in one pilot DMA to refine the pressure management schemes designed by WSO before expanding to the rest of the DMAs.

2.8.4 Subtask Eight-D) – Full Scale Implementation of Advanced Pressure Management

Once the advanced pressure management pilot is successfully completed WSO will implement the advanced pressure management schemes in the rest of the DMAs. The DMA leakage monitoring system will provide immediate data on the leakage reduction achieved by each of the advanced pressure management schemes allowing for further refinement of the schemes if necessary.

2.9 Task Nine – Calculate Economic Leakage Intervention Level for Each DMA

Based on the size of each DMA, its infrastructure characteristics, the cost to undertake leak detection, and the rate of rise in leakage in the DMA, WSO will calculate the economic leakage intervention level for each DMA.

For each DMA there will be a leakage level where the cost to detect unreported leaks in the DMA equals the cost of the water lost due to those unreported leaks. Once the leakage level rises beyond this point CFUD starts losing money and the DMA leakage level should be reduced back to minimum levels through leak detection and repair. This economic intervention level is different from DMA to DMA.

Figure 2-4 depicts an example of the rise of leakage in a DMA over time as it's monitored through the DMAs leakage monitoring system. Once the leakage level in the DMA reaches the calculated economic intervention level the water utility sends a leak detection team to the DMA to find and fix all detectable leaks in order to reduce the leakage volume to economic optimal levels. Figure 2-4 is an example from one of the water loss control programs implemented by WSO.

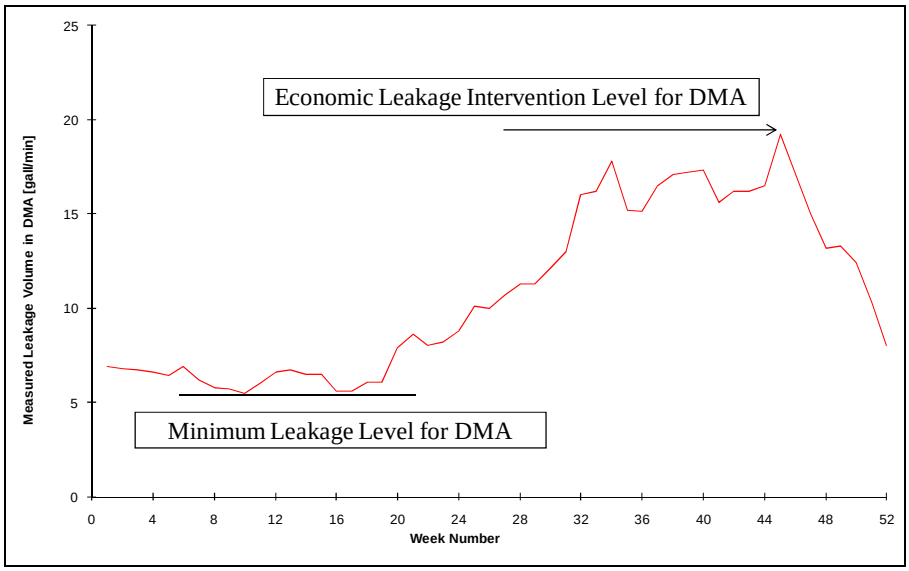

Figure 2-4 Economic Leakage Intervention Level for DMA

2.10 Task Ten – Training of CFUD Personnel on Water Loss Management, Data Handling and Data Management

Throughout the two year water loss control program WSO will continuously train CFUD personnel on water loss management activities, data handling and data management, and data analysis. WSO will provide CFUD with clear procedures on how to manage and analysis the data necessary for a successful water loss control policy. Extensive training will be provided on the use of the DMA data and leakage monitoring system designed and implemented by WSO.

2.11 Task Eleven – Project Management of Entire Water Loss Control Program

WSO will manage the entire water loss control program in conjunction with CFUD. The fact that WSO has already implemented several successful water loss control programs will guarantee an efficient and well coordinated execution of the program.

2.11.1 Subtask Eleven–A) Preparation of Monthly Progress Reports

Monthly interim progress reports detailing the progress to date along with monthly invoices will be prepared by WSO.

2.11.2 Subtask Eleven–B) Preparation of Draft and Final Report

WSO will prepare a detailed final report at the end of the water loss control program period that describes in detail all the work undertaken, the methodologies used, the findings of the Leak Detection Survey and recommended strategy for continued real loss management by CFUD. The final report will be submitted in PDF format and will document all data collected and work performed.

CFUD Responsibilities for Water Loss Control Program

During most Water Loss Control Programs, WSO requests the client utility to implement necessary distribution operation tasks such as opening and closing of valves and hydrants, operating and adjusting PRV's, etc. To assure a successful implementation of this Two Year Water Loss Control Program the CFUD will need to be actively engaged in the program and provide the following assistance to WSO:

- Facilitate and assist during field work to verify integrity of pressure zones – testing the hydraulic integrity of boundary valves.
- Facilitate collection of pressure data throughout the system
- Provide system maps
- Repair of detected leaks in a timely manner
- Access to requested data
- Provide access to CFUD system infrastructure
- Adjust PRV settings
- If necessary provide tapings on mains for flow measurements using WSO's insertion flow meters

Based on experience it is recommended that CFUD selects one staff member to be the internal Water Loss Control Program manager, who is the primary contact for WSO throughout the program.

3 INTRODUCTION TO WATER SYSTEMS OPTIMIZATION, INC.

WSO is highly specialized in water loss management and reduction technologies including American Water Works Association (AWWA) water audits, leakage modeling, leak detection and repair, apparent loss assessment and reduction, and pressure management. WSO has proven ability in this field through all phases of the project life cycle from investigation, analysis, design, development, planning and implementation. Although technology plays an important role in what we do, at the core of our business are the people we employ to deliver the services for our clients. All our project personnel are well-trained, skilled and experienced in our specialized field, and highly motivated to provide high quality service. WSO is able to provide world class experience with an intimate knowledge of North American methodologies, technologies and regulation. The philosophy of WSO is to provide professional services using the most advanced and cost effective tools to yield a high standard of overall accuracy and reliability. We are a strong believer in using data obtained from field tests and carrying out detailed component analysis for all of our water audit work, to increase the accuracy of analysis and the quality of our service.

WSO was formed in 2002, and is now the industry leader in water loss management in North America. Since formation, the company has been successfully using the AWWA recommended water loss management and assessment methodologies. WSO has undertaken the largest water loss management projects in the United Sates over the past six years and was the lead firm on two key water loss related AwwaRF research studies. Both studies have now been published by AwwaRF to provide North American water utilities with guidance on their water loss management activities. The company is active within the AWWA and has employees that are established members of the AWWA Water Loss Control Committee and the International Water Association (IWA) Water Loss Task Force. WSO has also advised the Californian Urban Water Conservation Council on regulatory parameters relating to water loss management.

WSO's key personnel comprise the most recognized individuals in North America with respect to the implementation of water loss assessment, management and reduction programs. WSO's key staff consists of individuals with extensive national and international experience in developing and implementing cutting edge water loss management methodologies and technologies. WSO's key personnel not only deliver highly successful projects to clients but also contribute towards advancing the water loss management industry through continuous research work and publication of industry research reports, papers and text books. WSO is uniquely positioned to guarantee clients the most advanced water loss management methodologies and technologies.

The company has carried out the previous 5-year DMA measurement and leak detection survey service contract for Nashville Metro from November 2004 to November 2009 and has just recently been awarded the next 5-year DMA measurement and leak detection survey service contract for Nashville Metro from 2010 to 2015. This 5-year contract includes the setting up of temporary district metered areas (DMA's), flow and pressure measurement and analysis to determine leakage levels, prioritization of the DMA's for leak detection, and leak detection survey to identify unreported leaks. This is just one example of the many water loss control programs WSO has successfully implemented over the past eight years.

4 STAFF RESUMES

4.1 Stephen Preston – President - WSO

Project Role: Project Director

Years of Experience: 25

Office Address: 102 Space Park South Drive, Nashville TN, 37211

Education: Graduateship of Royal Society of Chemistry (Pt1 with Practical) – Preston Polytechnic
HNC Chemistry – Wigan College of Technology
HNC Civil Engineering – Wigan College of Technology

Stephen Preston is President of WSO. He is also Managing Director of WSO's parent company, Waterframe Limited and is also Managing Director of the WSO's sister company in Papua New Guinea, Water Systems Optimization (PNG) Limited. He has 25 years experience of water distribution system design, operation, network modeling non-revenue water and leakage management. He has worked in many countries worldwide including USA, UK, US, Middle Eastern, African, Asian and Pacific region. He developed highly successful Non-Revenue Water reduction projects in Malaysia and Papua New Guinea.

Stephen has extensive experience in creating DMAs and implementing pressure management schemes. Steve has successfully implemented several system-wide DMA and pressure management schemes over the past 25years. Stephen was involved in the original development of the Burst and Background Estimate (BABE) concept and he developed numerous water loss modeling and pressure management software suites during his career. Most recently he developed modeling software for component analysis of real losses, target setting and selection of appropriate intervention strategies against real losses.

Recent WSO contracts that Stephen has participated in include the Phoenix Water Audit of 2004, and the series of Nashville Water Audit contracts carried out in 2004, 2005, and 2006. In these contracts, Stephen carried out the detailed analysis of billing records and customer meter test data to quantify the scale of revenue losses due to meter under-registration and billing errors. In the Phoenix Water Audit contract, the billing data and customer meter test data analysis carried out by Stephen identified one particular make and model of 5/8-inch water meter that was being used by the City of Phoenix which was responsible for 64% of the total revenue loss through under-registration of consumption. These particular meters accounted for only 17% of the total meter stock in use. The revenue loss through these meters was approximately 5 times worse than the average for other meter types. In the most recent Nashville Water Audit contract, commercial end-use consumption profiles were obtained and used to calculate the revenue enhancement that would be achieved by meter right-sizing. The average annual revenue enhancement before change-out cost for the pre-selected meters was $472 per meter for customers with currently installed 3-inch meters and $2,854 per meter for customers with currently installed 4-inch meters.

In 2003, Stephen developed the Port Moresby Non-Revenue Water Reduction project for WSO's sister company, Water Systems Optimization (PNG) Limited. This three-year performance-based non-revenue water reduction contract was successfully completed under

Stephen's direction in June 2006, and delivered a reduction in non-revenue water in excess of 9 million gallons per day out of a starting production level of 45 million gallons per day. The annual saving to the client water company is of the order of $2.5 million.

4.2 Reinhard Sturm – Vice President - WSO

Project Role: Project Manager

Years of Experience: 11

Principle Office Address: 233 30th Street, San Francisco CA, 94107

Education: University of Natural Resources and Applied Life Science, Vienna, Austria
M.SC. in Environmental Engineering 1998

Reinhard Sturm is Vice President of Operations –West for WSO. Reinhard has been working on Water Loss reduction projects throughout the world, including countries such as USA, Canada, Malaysia, India, Sri Lanka, Kazakhstan, Egypt, and Moldova. For the past seven years his focus was on the U.S. and since then he has been involved in some of the biggest Water Loss assessment and reduction projects in the U.S.

Reinhard was the Co-principle investigator for the AwwaRF research project #2928 "*Leakage Management Technologies*" where he was the lead researcher and also responsible for the successful management of the project. This very prestigious research project, published in August 2007, provides North American water utilities with a detailed guidance on the most up to date and most applicable leakage management technologies such as DMA's and advanced pressure management. Reinhard is also a co-author of the AwwaRF research report "*Evaluating Water Loss and Planning Loss Reduction Strategies*". Reinhard is furthermore the co-author of the professional manual recently published by McGraw Hill and AWWA in June 2008 – "*Water Loss Control Manual – 2nd Edition*". Reinhard has published more than 10 specialized papers on various topics related to water loss management over the past seven years.

Reinhard is actively involved in the International Water Association – Water Loss Task Force (WLTF) where he served two terms as technical secretary and he is also actively involved in the American Water Works Association – Water Loss Control Committee (WLCC). Four years ago Reinhard was invited by the California Urban Water Conservation Council to act as technical advisor on their revision of a best management practice for reduction of Non-Revenue Water. He has since then advised the council on how to assess and economically reduce all components of Water Loss.

Some of the Water Loss assessment and reduction projects Reinhard recently managed for clients such as the Philadelphia Water Department PWD (2003 to 2010), San Francisco Public Utilities Commission SFPUC (2005 to 2007), El Dorado Irrigation District EID (2005), City of Phoenix Water Services Department (2003 to 2005) and Southern California EDISON (2007 to 2009) all included components very similar to the tasks outlined in this proposal.

4.3 Isabel Szendrey P.E. – Jr. Project Manager

Project Role: Jr. Project Manager

Years of Experience:

Principle Office Address: 233 30th Street, San Francisco CA, 94107

Education: MSE Environmental Processes Engineering, Johns Hopkins University, 2002
BS Civil Engineering, Johns Hopkins University, 2001

Isabel is a Jr. Project Manager in WSO working on Water Loss reduction projects throughout California and other US states. Isabel has also worked in a variety of water, wastewater, and environmental projects in the US and Puerto Rico. She has experience in regional planning and project planning for water and wastewater infrastructure projects, hydraulic models for water and wastewater distribution systems, and environmental permits.

In the Water Loss field, she has worked on all aspects of the preparation of a validated standard water audit, including meter testing, field leakage measurements, flow and pressure data collection and analysis, billing data analysis, and leakage modeling. She was a main participant in the City of Folsom water audit which has led to the project presented in this proposal. As a result of the field tests of the system input meters carried out for that project, a system input meter that was not measuring the flow accurately due to improper installation was identified. In addition, through the analysis of the billing data, Isabel was able to estimate a total utility-wide consumption volume when consumption data for only 10% of the customers was available. This was a crucial step to determine a water loss volume for the City of Folsom.

Isabel has also worked on other projects related to the Water Loss field. For Southern California EDISON, she was involved in a pilot project to evaluate the nexus between water loss and energy consumption. For the Philadelphia Water Department, Isabel conducted an analysis of water consumption trends to identify any changes in the consumption pattern due to the implementation of pressure controls in a district metered area within the utility.

5 BUDGET AND TIMELINE

5.1 Budget Year One

A breakdown of costs per task and hours assigned is provided as follows:

	PROJECT TASK ASSIGNMENT MATRIX AND BUDGET YEAR ONE			
Staff Designation	Project Director	Sr. Project Manager	Jr. Project Manager	
Hourly Rate	$180	$165	$135	
Tasks	Estimated hours per task	Estimated hours per task	Estimated hours per task	Total Fee
Kick-off Meeting	0	8	8	$2,360.00
Task 1 – Initial Comprehensive Leak Detection Campaign	NA	NA	NA	$70,000.00
Task 2 – Initial Bottom-Up DMA Measurements in Zone1 and Zone4,5,6	40	204	108	$54,900.00
Task 3 – Second Round of Comprehensive Leak Detection Campaign	NA	NA	NA	$70,000.00
Task 4 – Final Bottom-Up DMA Measurements in Zone1 and Zone4,5,6	8	52	20	$12,620.00
Task 5 – Convert Zone 2 and Zone 3 into Permanent DMAs	8	80	40	$19,840.00
Task 6 – Design and Implement Data Analysis and Management system for Leakage Monitoring in all DMAs	40	120	80	$37,400.00
Task 7 – Assess Potential for Subdividing Zone 2 into two DMAs and Subdivide if Possible	0	0	0	----------
Task 8 – Pressure Management	0	0	0	----------
Task 9 – Calculate Economic Leakage Intervention Level of Each DMA	0	0	0	----------
Task 10 – Training of CFUD Personnel on Water Loss Management, Data Handling and Data Management	0	40	20	$9,200.00
Task 11 – Project Management of Entire Water Loss Control Program – Year One	76	236	152	$72,380.00
Total Time, hours	**172**	**740**	**428**	
Total Professional Fee	**$30,960.00**	**$122,100.00**	**$55,640.00**	**$348,700.00**
Reimbursable Expenses				**$2,100.00**
Total Fee - Year One				**$350,800.00**

5.2 Budget Year Two

A breakdown of costs per task and hours assigned is provided as follows:

	PROJECT TASK ASSIGNMENT MATRIX AND BUDGET YEAR TWO			
Staff Designation	Project Director	Sr. Project Manager	Jr. Project Manager	
Hourly Rate	$180	$165	$135	
Tasks	Estimated hours per task	Estimated hours per task	Estimated hours per task	Total Fee
Kick-off Meeting	0	0	0	----------
Task 1 – Initial Comprehensive Leak Detection Campaign	0	0	0	----------
Task 2 – Initial Bottom-Up DMA Measurements in Zone1 and Zone4,5,6	0	0	0	----------
Task 3 – Second Round of Comprehensive Leak Detection Campaign	0	0	0	----------
Task 4 – Final Bottom-Up DMA Measurements in Zone1 and Zone4,5,6	0	0	0	----------
Task 5 – Convert Zone 2 and Zone 3 into Permanent DMAs	0	0	0	----------
Task 6 – Design and Implement Data Analysis and Management system for Leakage Monitoring in all DMAs	0	0	0	----------
Task 7 – Assess Potential for Subdividing Zone 2 into two DMAs and Subdivide if Possible	8	40	40	$13,240.00
Task 8 – Pressure Management	48	260	200	$77,540.00
Task 9 – Calculate Economic Leakage Intervention Level of Each DMA	16	80	16	$18,160.00
Task 10 – Training of CFUD Personnel on Water Loss Management, Data Handling and Data Management	0	40	20	$9,200.00
Task 11 – Project Management of Entire Water Loss Control Program – Year Two – Including Draft and Final Report	104	224	188	$80,120.00
Total Time, hours	**176**	**644**	**464**	
Total Professional Fee	**$31,680.00**	**$106,260.00**	**$60,320.00**	**$198,260.00**
Reimbursable Expenses				**$900.00**
Total Fee - Year Two				**$199,160.00**

5.3 Total Budget for Two Year Water Loss Control Program

The cost for the proposed Two Year Water Loss control program is $546,960.000 for professional fees and $3,000 for reimbursable expenses resulting in a total project cost of $549,960.00.

With the Two Year Water Loss Control Program estimated to achieve savings in the range of 1,000MG/Year, with monetary savings of about $1.4M/Year, the cost for implementing this program will have a very short payback period.

5.4 Timeline

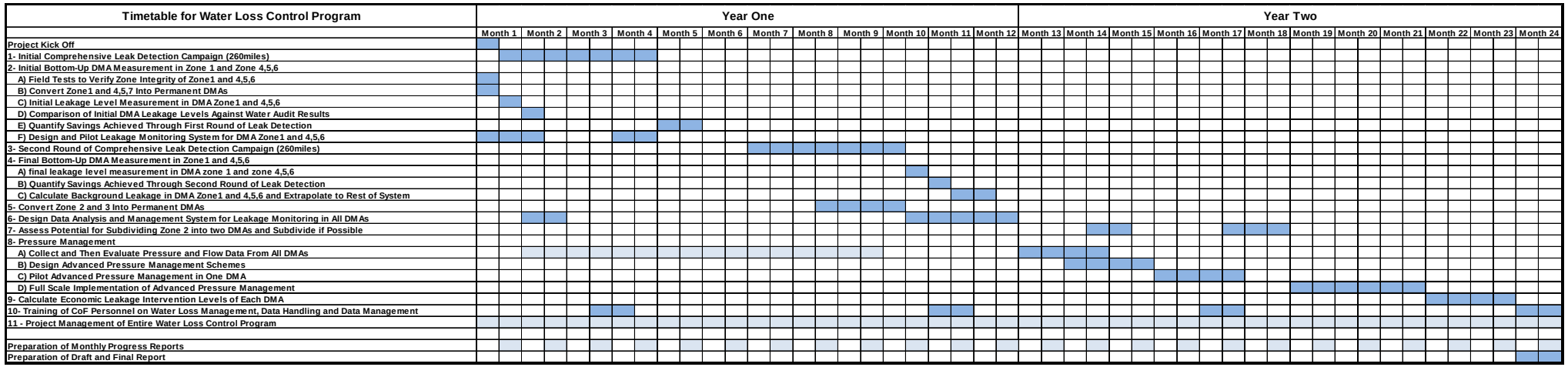
Timetable for Water Loss Control Program
Year One
Year Two
Month 1
Month 2
Month 3
Month 4
Month 5
Month 6
Month 7
Month 8
Month 9
Month 10
Month 11
Month 12
Month 13
Month 14
Month 15
Month 16
Month 17
Month 18
Month 19
Month 20
Month 21
Month 22
Month 23
Month 24
Project Kick Off
1- Initial Comprehensive Leak Detection Campaign (260miles)
2- Initial Bottom-Up DMA Measurement in Zone 1 and Zone 4,5,6
A) Field Tests to Verify Zone Integrity of Zone1 and 4,5,6
B) Convert Zone1 and 4,5,7 Into Permanent DMAs
C) Initial Leakage Level Measurement in DMA Zone1 and 4,5,6
D) Comparison of Initial DMA Leakage Levels Against Water Audit Results
E) Quantify Savings Achieved Through First Round of Leak Detection
F) Design and Pilot Leakage Monitoring System for DMA Zone1 and 4,5,6
3- Second Round of Comprehensive Leak Detection Campaign (260miles)
4- Final Bottom-Up DMA Measurement in Zone1 and 4,5,6
A) final leakage level measurement in DMA zone 1 and zone 4,5,6
B) Quantify Savings Achieved Through Second Round of Leak Detection
C) Calculate Background Leakage in DMA Zone1 and 4,5,6 and Extrapolate to Rest of System
5- Convert Zone 2 and 3 Into Permanent DMAs
6- Design Data Analysis and Management System for Leakage Monitoring in All DMAs
7- Assess Potential for Subdividing Zone 2 into two DMAs and Subdivide if Possible
8- Pressure Management
A) Collect and Then Evaluate Pressure and Flow Data From All DMAs
B) Design Advanced Pressure Management Schemes
C) Pilot Advanced Pressure Management in One DMA
D) Full Scale Implementation of Advanced Pressure Management
9- Calculate Economic Leakage Intervention Levels of Each DMA
10- Training of CoF Personnel on Water Loss Management, Data Handling and Data Management
11 - Project Management of Entire Water Loss Control Program
Preparation of Monthly Progress Reports
Preparation of Draft and Final Report

5.5 Assigned Personnel

Project Director: **Stephen Preston** will be assigned as the Project Director for this project. In his position he will be responsible for quality control and technical oversight in addition to providing technical input to the program.

Sr. Project Manager: **Reinhard Sturm** will be the Project Manager for this project. In this position he will be responsible to track the progress of the project and the individual tasks, be responsible for collection of data and necessary information, setting up and coordinating meetings and field work, data analysis and preparation and maintenance of records of meetings (including outcomes and tracking follow up items), prepare monthly progress reports for invoicing, prepare draft final and final report (with relevant input from Stephen Preston).

Jr. Project Manager: **Isabel Szendrey P.E.** will the Jr. Project Manager for this project. In her role she will be responsible for data collection and management and coordination of field work with CFUD.

Appendix A

Proposed Equipment Information for Leak Detection and Flow and Pressure Measurements

Appendix B

Example Leak Repair Form

Sacramento River Bank Protection Project American River RM 0.5R Mitigation Site Final Plans and Specifications

US Army Corps
of Engineers
Sacramento District

Sacramento River Bank Protection Project

American River RM 0.5R Mitigation Site

FINAL PLANS

California

FY-2009

DISTRIBUTION STATEMENT A
Approved for public release; distribution is unlimited.

REGISTERED PROFESSIONAL ENGINEER
LEONARD J. HOWARD
No. 53319
6/18/09
Exp: 06/30/11
CIVIL
STATE OF CALIFORNIA

THIS PROJECT WAS DESIGNED BY THE SACRAMENTO DISTRICT OF THE U. S. ARMY CORPS OF ENGINEERS. THE INITIALS OR SIGNATURES AND REGISTRATION DESIGNATIONS OF INDIVIDUALS APPEAR ON THESE PROJECT DOCUMENTS WITHIN THE SCOPE OF THEIR EMPLOYMENT AS REQUIRED BY ER 1110-1-8152.

Approved
KEVIN KNUUTI, P.E. 19 JUNE 2009
Kevin Knuuti, P.E. Chief, Engineering Division Date:
Prepared Under the Direction of:
COL. THOMAS C. CHAPMAN 19 JUNE 2009
Thomas C. Chapman Col. Corps of Engineers

Drawing Code: C-171-20-01
Drawn by: TVS
Design File No: 50-25-6004
Designed by: LJH
Spec No. 1668

Approved Functional Adequacy
RICK L. POEPPELMAN 19 JUNE 2009
Rick L. Poeppelman-Chief, Design Branch Date:
Prepared by
SACRAMENTO DISTRICT
DESIGN BRANCH
RICHARD A. TORBIK 19 JUNE 2009
Richard A. Torbik-Chief, Section B Date:

California
Sacramento River Bank Protection Project
American River RM 0.5R Mitigation Site
TITLE SHEET

Sheet reference number:
G1
Sheet 1 of 12

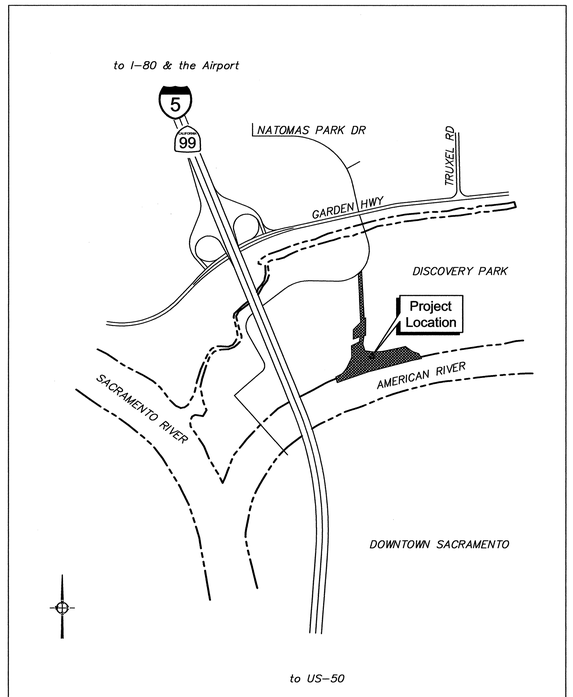

VICINITY MAP
NOT TO SCALE

GENERAL NOTES:

1. SEE PRINTED TECHNICAL SPECIFICATIONS BOOKLET FOR ADDITIONAL REQUIREMENTS AND INFORMATION.
2. ALL WORK IS TO BE PERFORMED BY A LICENSED CONTRACTOR AND EXPERIENCED WORKERS. THE CONTRACTOR SHALL CONFORM TO ALL FEDERAL, STATE, AND LOCAL CODES AND OBTAIN AND PAY FOR ALL PERMITS NECESSARY TO COMPLETE WORK.
3. THE CONTRACTOR SHALL ASSUME SOLE RESPONSIBILITY FOR JOB SITE CONDITIONS DURING THE COURSE OF PROJECT INCLUDING SAFETY OF ALL PERSONS AT ALL TIMES. THE CONTRACTOR SHALL BE RESPONSIBLE TO PROTECT CONSTRUCTION EQUIPMENT AND MATERIALS FROM THEFT AND VANDALISM DURING THE CONSTRUCTION PERIOD.
4. TEMPORARY FENCING SHALL BE INSTALLED AND MAINTAINED BY THE CONTRACTOR AROUND THE PERIMETER OF THE PROJECT AREA AND AT OTHER LOCATIONS DEEMED NECESSARY BY THE CONTRACTOR.
5. ALL STORAGE OF EQUIPMENT AND MATERIALS SHALL OCCUR WITHIN THE AREA IDENTIFIED IN THESE PLANS AS "STAGING AREA" UNLESS OTHERWISE APPROVED BY THE CONTRACTING OFFICER.
6. A COMPREHENSIVE EFFORT HAS BEEN MADE TO LOCATE AND DELINEATE ALL KNOWN UNDERGROUND UTILITIES, THE CONTRACTOR SHALL DETERMINE THE EXACT LOCATION OF ALL UTILITIES WITHIN THE CONSTRUCTION LIMITS, ALONG THE CONSTRUCTION ACCESS ROUTE, AND IN THE CONSTRUCTION STAGING AREAS BEFORE COMMENCING WORK. THE CONTRACTOR SHALL CALL ALL GOVERNING AGENCIES AND UNDERGROUND SERVICE ALERT (USA) 48 HOURS IN ADVANCE OF EXCAVATION AT (800) 227-2600. EXCAVATION IS DEFINED AS DIGGING 12 OR MORE INCHES BELOW THE EXISTING SOIL SURFACE.
7. THE CONTRACTOR IS REPSONSIBLE FOR PERFORMING ALL POTHOLING REQUIRED TO COMPLETE THE WORK PER APPROVED PLANS OR AS REQUIRED BY OWNER.
8. IF ARTIFACTS, FOREIGN OBJECTS, BONE, OR UNKNOWN MATERIALS ARE ENCOUNTERED WHILE DIGGING OR EXCAVATING ON SITE, THE CONTRACTOR SHALL SUSPEND WORK WITHIN 50 FEET OF THE LOCATION UNTIL A QUALIFIED ARCHAEOLOGIST IS ABLE TO ASSESS THE SITE AND FINDINGS TO DETERMINE SIGNIFICANCE.
9. THE CONTRACTOR SHALL BE RESPONSIBLE FOR REPAIRING ANY DAMAGE CAUSED BY THE CONTRACTOR TO EXISTING INFRASTRUCTURE, IRRIGATION OR PUMPING FACILITIES, STORM DRAIN PIPES, BRIDGES, PAVEMENT, ROADS, FENCING, FLOOD CONTROL STRUCTURES, AND OTHER UTILITIES AND IMPROVEMENTS.
10. NO WORK OUTSIDE OF THE DESIGNATED WORK AREA WILL BE PERMITTED WITHOUT THE APPROVAL OF THE CONTRACTING OFFICER.
11. THE CONTRACTOR SHALL BE RESPONSIBLE FOR COORDINATING AND SCHEDULING OF CONSTRUCTION OPERATIONS WITH THE CONSTRUCTION AND WORKING OPERATIONS OF OTHERS WORKING ON OR NEAR THE PROJECT SITE.
12. THE CONTRACTOR SHALL MAINTAIN AND OPERATE CONSTRUCTION EQUIPMENT TO MINIMIZE EXHAUST EMISSIONS. DURING CONSTRUCTION, TRUCKS AND EQUIPMENT SHALL BE SHUT OFF WHEN LOADING OR UNLOADING OR OTHERWISE STATIONARY AND OPERATED ONLY WHEN NECESSARY. EQUIPMENT SHALL BE MAINTAINED IN GOOD CONDITION AND WELL-TUNED TO MINIMIZE EXHAUST EMISSIONS.
13. ALL WRITTEN DIMENSIONS SUPERSEDE SCALED DIMENSIONS.
14. GRID COORDINATES REFER TO CALIFORNIA STATE PLANE COORDINATES ZONE 2 NAD 83, FEET.
15. ELEVATIONS REFERENCE NGVD29
16. OVERBANK TOPOGRAPHY COMES FROM 2005 TOPOGRAPHIC SURVEY.
17. CHANNEL BATHYMETRY DEVELOPED FROM 2006 HYDROGRAPHIC SURVEY.
18. EXISTING INSTREAM SNAGS ARE NOT IDENTIFIED IN THE PLAN SHEETS. THESE INSTREAM SNAGS SHOULD BE PROTECTED IN PLACE UNLESS OTHERWISE APPROVED BY THE FIELD ENGINEER.
19. CONTOUR LINES IN DRAWINGS ARE AT 1 FT. INTERVALS.
20. THE CONTRACTOR IS RESPONSIBLE FOR ALL CONSTRUCTION STAKING. THE CONTRACTOR SHALL CONTACT THE CONTRACTING OFFICER IF DISCREPANCIES ARE FOUND BETWEEN THE PLANS AND FIELD CONDITIONS BEFORE PROCEEDING WITH WORK. ALL FIELD ADJUSTMENTS MUST BE APPROVED BY THE CONTRACTING OFFICER IN WRITING PRIOR TO INSTALLATION.
21. THE CONTRACTOR IS RESPONSIBLE FOR SOIL EROSION CONTROL MEASURES THAT MAY BE REQUIRED THROUGH THE DURATION OF THE CONTRACT PERIOD. SHOULD SOIL EROSION CONDITIONS EXIST WHEN THE CONTRACTOR INITIALLY ACCEPTS THE SITE, THE CONTRACTING OFFICER SHALL BE CONTACTED. FAILURE OF THE CONTRACTOR TO NOTIFY THE CONTRACTING OFFICER IMPLIES ACCEPTANCE OF THE SITE BY THE CONTRACTOR IN ITS EXISTING CONDITION. ALL COSTS NECESSARY TO MITIGATE EXISTING EROSION CONTROL PROBLEMS SHALL BE AT THE CONTRACTOR'S EXPENSE AND NO ADDITIONAL COST TO THE OWNER OR INCREASE IN ORIGINAL BID PRICE SHALL BE PERMITTED.
22. ALL CONSTRUCTION OFFSETS ARE PERPENDICULAR TO CONSTRUCTION BASELINE UNLESS OTHERWISE NOTED.
23. ALL CROSS-SECTIONS ARE SHOWN LOOKING DOWNSTREAM.
24. THE PROJECT SITE IS LOCATED WITHIN THE AMERICAN RIVER FLOODPLAIN AND, THEREFORE, SUBJECT TO INUNDATION. THE CONTRACTOR IS HEREBY NOTICED TO KEEP APRISED OF LOCAL WEATHER AND RIVERFLOW CONDITIONS TO ENSURE PEOPLE, EQUIPMENT, AND SUPPLIES ARE MOVED TO HIGHER GROUND IN CASE OF A FLOOD EVENT.
25. ALL EXCAVATED MATERIAL MUST BE HAULED OFF SITE VIA BARGES.

LEGEND		
— — — — —	CONSTRUCTION LIMITS	PROPOSED
/ / / / /	STAGING AREA	PROPOSED
	INSTREAM WOODY MATERIAL	PROPOSED
	BRUSH MATTRESS	PROPOSED
———	PROPOSED GRADE CONTOUR	PROPOSED
•	TREE – DIAMETER (TYPE)	EXISTING
———	PAVED SURFACES	EXISTING
△	CONTROL POINT	EXISTING
— — —	EXISTING CONTOUR	EXISTING
3.5+	FINISHED GRADE	PROPOSED
ϕ EB 500	ELDERBERRY	PROPOSED
-•-•-•-	BEAVER FENCE	PROPOSED

ABBREVIATIONS	
D	DECID
COT	COTTONWOOD
UNK	UNKNOWN
AVG	AVERAGE
IWM	INSTREAM WOODY MATERIAL
ø	DIAMETER
MIN	MINIMUM
TYP	TYPICAL
O.C.	ON-CENTER
SF	SQUARE FEET
FT	FEET
NTS	NOT TO SCALE
PVC	POLYVINAL
Y	YES
N	NO

SHEET INDEX	
#	TITLE
G1	TITLE SHEET
G2	GENERAL NOTES SHEET
G3	ACCESS PLAN SHEET
C1	PLAN SHEET
C2	CROSS SECTIONS SHEET (1)
C3	CROSS SECTIONS SHEET (2)
C4	HABITAT FEATURES DETAIL SHEET
L1	PLANTING PLAN SHEET
L2	PLANTING PROGRAM SHEET
L3	PLANTING DETAILS SHEET
L4	ELDERBERRY TRANSPLANT SHEET
L5	ELDERBERRY TRANSPLANT TABLE

REGISTERED PROFESSIONAL ENGINEER
LEONARD J. HOWARD
No. 53319
6/18/09
Exp: 06/30/11
CIVIL
STATE OF CALIFORNIA

US Army Corps of Engineers
Sacramento District

Symbol	Description	Date	Approved

Designed by: BGW
Dwn by: BGW
Reviewed by: LJH
Submitted by: RICHARD A. TORBIK
Chief, Civil Eng. Des. Sec. B
Date: 19 JUNE 2009
Rev.
Survey No.: 1688
Design file no: 50-25-6004
Drawing Code:
File name:
Plot date: 19 JUNE 2009
Dwg. scale:

California
Sacramento River Bank Protection Project
American River RM 0.5R Mitigation Site

GENERAL NOTES SHEET

Sheet reference number:
G2
Sheet 2 of 12

NOTES
1. LAND ACCESS TO THE SITE IS FROM INTERSTATE 5 TO GARDEN HIGHWAY TO DISCOVERY PARK.
2. THE CONTRACTOR SHALL MAINTAIN ACCESS ALONG THE AMERICAN RIVER BIKE TRAIL FOR PEDESTRIANS. TEMPORARY CLOSING FOR MOVING EQUIPMENT IS PERMITTED, HOWEVER PROPER SIGNAGE AND FLAGMEN ARE REQUIRED (SEE NOTE 4).
3. THE TRAIL SHALL BE KEPT CLEAR OF DEBRIS AND OBSTRUCTIONS, AND THE INTEGRITY OF THE PAVEMENT SHALL BE MAINTAINED AS TO NOT INHIBIT THE SAFE PASSAGE OF PEDESTRIANS AND BIKE TRAFFIC.
4. THE CONTRACTOR SHALL SUBMIT A TRAFFIC CONTROL PLAN TO THE CONTRACTING OFFICER, PRIOR TO COMMENCEMENT OF WORK.
5. EXISTING ASPHALT CONCRETE DAMAGED DURING THE CONSTRUCTION PROCESS SHALL BE REPAIRED TO ITS PRE-CONSTRUCTION CONDITION OR BETTER STATE.
6. BARGE ACCESS TO SITE AND COORDINATION WITH DRAW BRIDGE AUTHORITY IS THE RESPONSIBILITY OF THE CONTRACTOR.
7. ALL EXCAVATED MATERIAL MUST BE BARGED OFF-SITE. OTHER CONSTRUCTION MATERIALS AND EQUIPMENT MAY BE BROUGHT ON AND OFF SITE USING LAND ACCESS.
8. AERIAL PHOTOGRAPH FROM AUGUST 2005.

US Army Corps of Engineers
Sacramento District

Symbol	Description	Date	Approved

Designed by: BGW
Dwn by: TVS
Spec No.: 1668
Reviewed by: LJH
Submitted by: RICHARD A. TORBIK Chief, Civil Eng. Des. Sec. B
Date: 19 JUNE 2009
Design file no: 50-25-6004
Drawing Code:
File name:
Plot date: 19 JUNE 2009
Dwg scale:
Rev.

California
Sacramento River Bank Protection Project
American River RM 0.5R Mitigation Site

ACCESS PLAN SHEET

REGISTERED PROFESSIONAL ENGINEER
LEONARD J. HOWARD
No. 53319
6/18/09
Exp: 06/30/11
CIVIL
STATE OF CALIFORNIA

Sheet reference number:
G3
Sheet 3 of 12

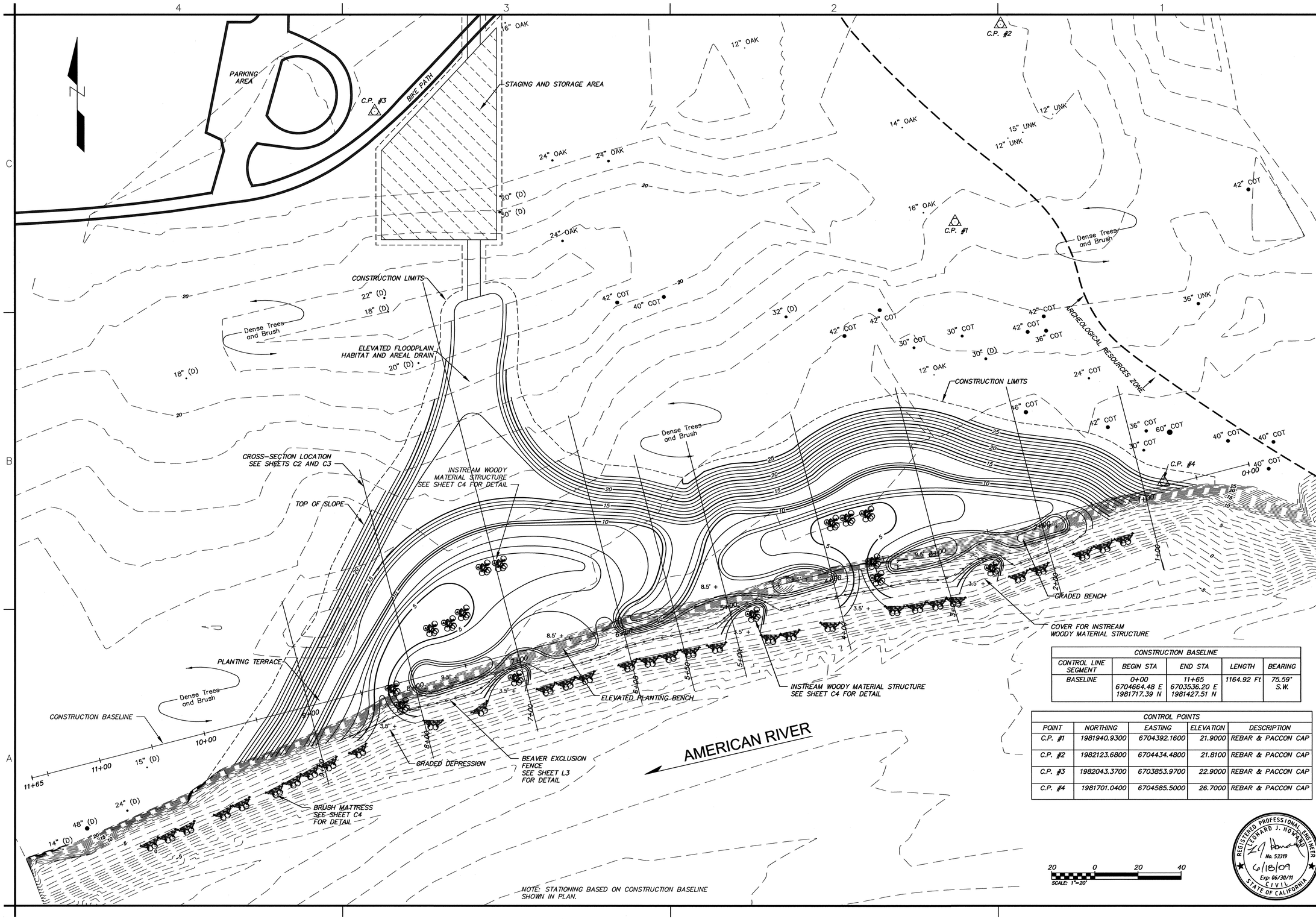

CONSTRUCTION BASELINE				
CONTROL LINE SEGMENT	BEGIN STA	END STA	LENGTH	BEARING
BASELINE	0+00 6704664.48 E 1981717.39 N	11+65 6703536.20 E 1981427.51 N	1164.92 Ft	75.59° S.W.

CONTROL POINTS				
POINT	NORTHING	EASTING	ELEVATION	DESCRIPTION
C.P. #1	1981940.9300	6704392.1600	21.9000	REBAR & PACCON CAP
C.P. #2	1982123.6800	6704434.4800	21.8100	REBAR & PACCON CAP
C.P. #3	1982043.3700	6703853.9700	22.9000	REBAR & PACCON CAP
C.P. #4	1981701.0400	6704585.5000	26.7000	REBAR & PACCON CAP

NOTE: STATIONING BASED ON CONSTRUCTION BASELINE SHOWN IN PLAN.

REGISTERED PROFESSIONAL ENGINEER
LEONARD J. HOWARD
No. 53319
6/18/09
Exp: 06/30/11
CIVIL
STATE OF CALIFORNIA

US Army Corps of Engineers
Sacramento District

Symbol	Description	Date	Approved

Designed by: BGW
Dwn by: TVS
Reviewed by: LJH
Submitted by: RICHARD A. TORBIK Chief, Cst Eng. Sec. B
Date: 19 JUNE 2009
Spec No.: 1668
Design file no: 50-25-6004
Drawing Code:
File name:
Plot date: 19 JUNE 2009
Dwg scale:
Rev:

California
Sacramento River Bank Protection Project
American River RM 0.5R Mitigation Site

PLAN SHEET

Sheet reference number:
C1
Sheet 4 of 12

1+00.00

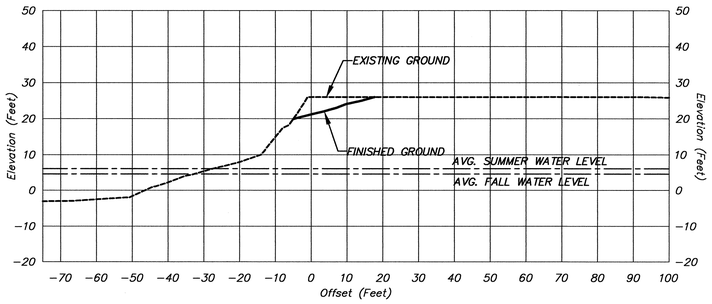

2+00.00

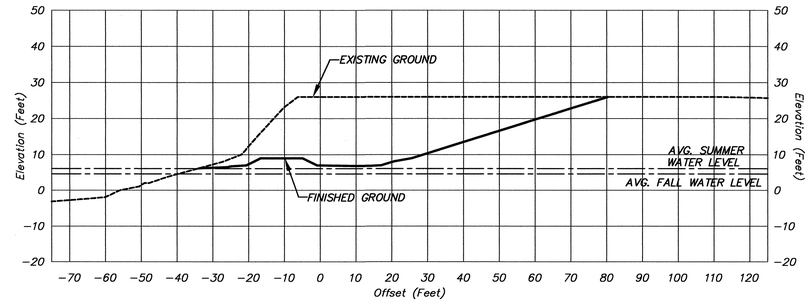

3+00.00

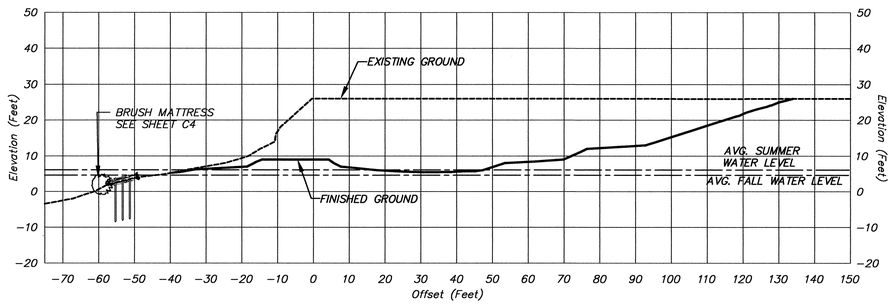

4+00.00

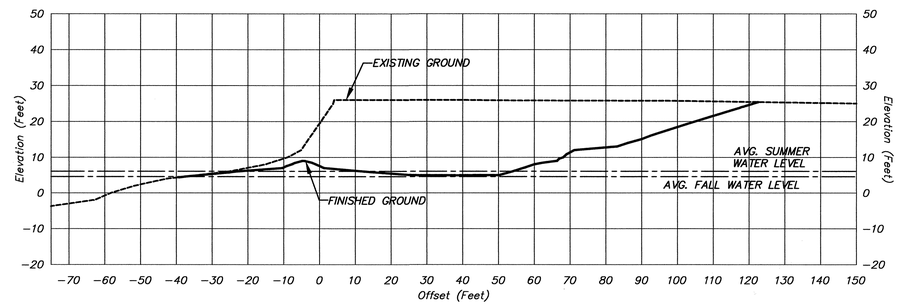

5+00.00

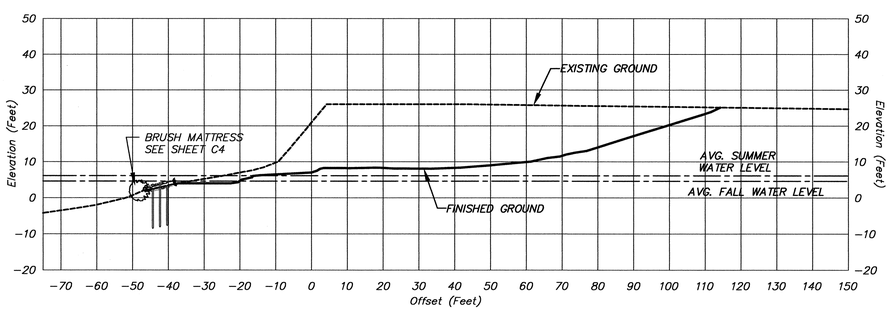

5+50.00

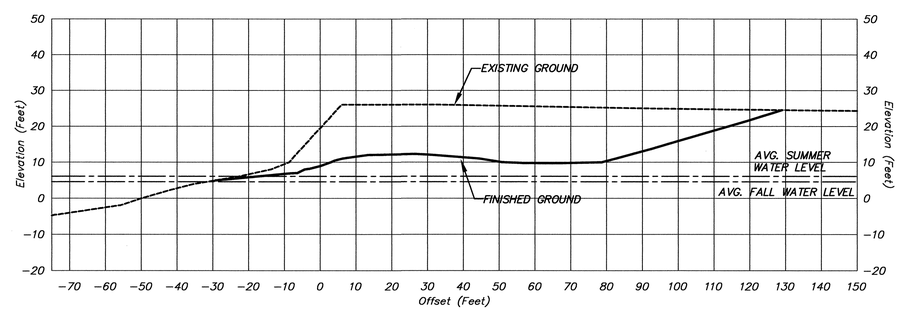

NOTES:
1. ALL CROSS-SECTIONS ARE CUT PERPENDICULAR TO TEMPORARY CONSTRUCTION BASELINE
2. CROSS-SECTIONS SHOW EXISTING GROUND ELEVATIONS, FINAL EXCAVATED ELEVATIONS, AND PROPOSED STRUCTURES. PROPOSED PLANTINGS ARE NOT SHOWN.
3. OFFSET IS MEASURED FROM THE INTERSECTION OF THE CONSTRUCTION BASELINE AND CROSS-SECTION.

REGISTERED PROFESSIONAL ENGINEER
LEONARD J. HOWARD
No. 53319
6/18/09
Exp: 06/30/11
CIVIL
STATE OF CALIFORNIA

US Army Corps of Engineers
Sacramento District

Symbol	Description	Date	Approved

Designed by: BGW
Dwn by: TVS
Spec No.: 1688
Reviewed by: LJH
Submitted by: RICHARD A. TORBIK Chief, Civil Eng. Des. Sec. B
Date: 19 JUNE 2009
Design file no: 50-25-6004
Drawing Code:
File name:
Plot date: 19 JUNE 2009
Dwg scale:
Rev.

California
Sacramento River Bank Protection Project
American River RM 0.5R Mitigation Site

CROSS SECTIONS SHEET 1

Sheet reference number:
C2
Sheet 5 of 12

6+00.00

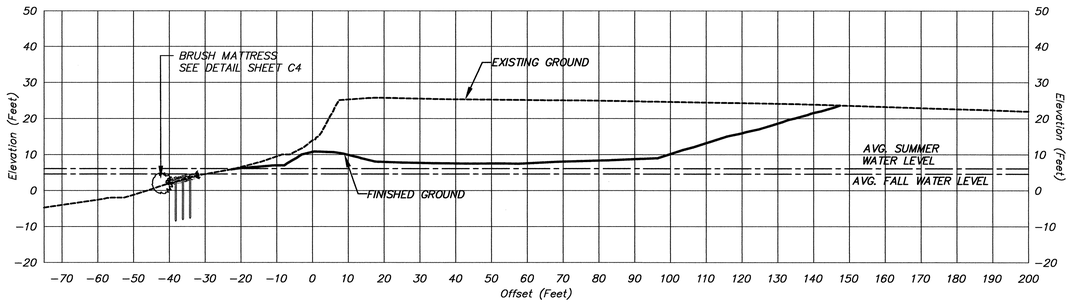

7+00.00

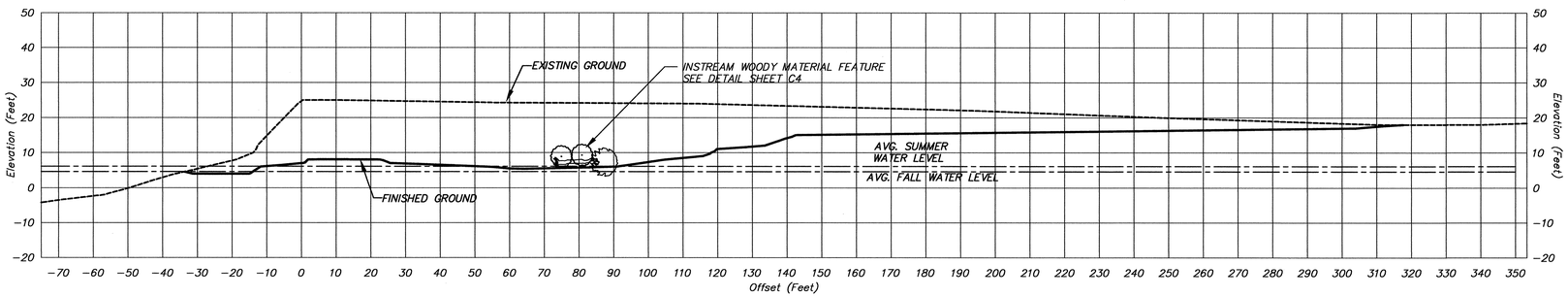

8+00.00

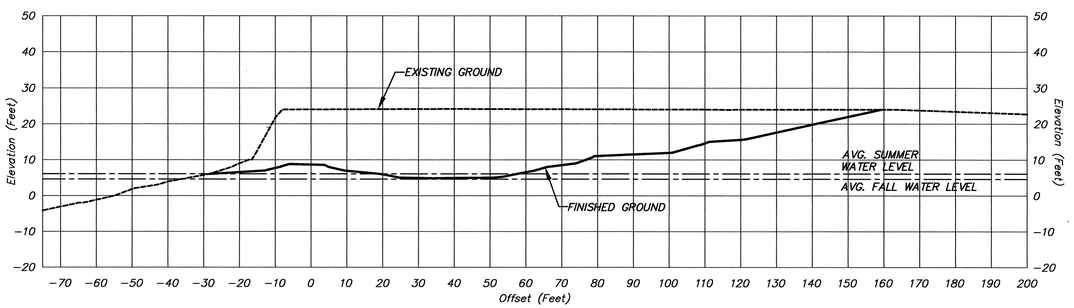

9+00.00

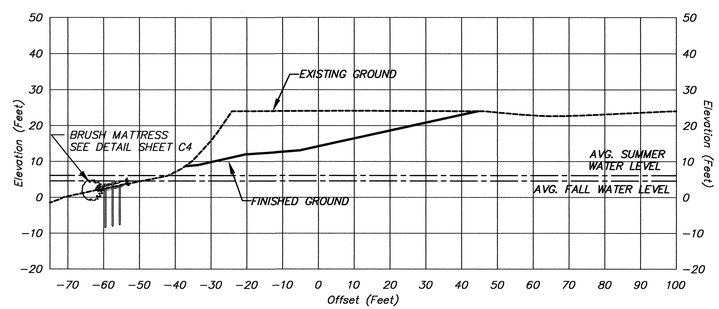

NOTES:
1. ALL CROSS-SECTIONS ARE CUT PERPENDICULAR TO TEMPORARY CONSTRUCTION BASELINE
2. CROSS-SECTIONS SHOW EXISTING GROUND ELEVATIONS, FINAL EXCAVATED ELEVATIONS, AND PROPOSED STRUCTURES. PROPOSED PLANTINGS ARE NOT SHOWN.
3. OFFSET IS MEASURED FROM THE INTERSECTION OF THE CONSTRUCTION BASELINE AND CROSS-SECTION.

REGISTERED PROFESSIONAL ENGINEER
EDWARD J. ROWARD
No. 53319
6/18/09
Exp: 06/30/11
CIVIL
STATE OF CALIFORNIA

US Army Corps of Engineers
Sacramento District

Symbol	Description	Date	Approved

Designed by: BGW
Dwn by: TVS
Spec No.: 1668
Date: 19 JUNE 2009
Rev.
Reviewed by: LJH
Design file no: 50-25-6004
Drawing Code:
Submitted by: RICHARD A. TORBIK Chief, Cvil Eng. Des. Sec. B
File name:
Plot date:
Dwg scale: 19 JUNE 2009

California
Sacramento River Bank Protection Project
American River RM 0.5R Mitigation Site

CROSS SECTIONS SHEET 2

Sheet reference number: C3

Sheet 6 of 12

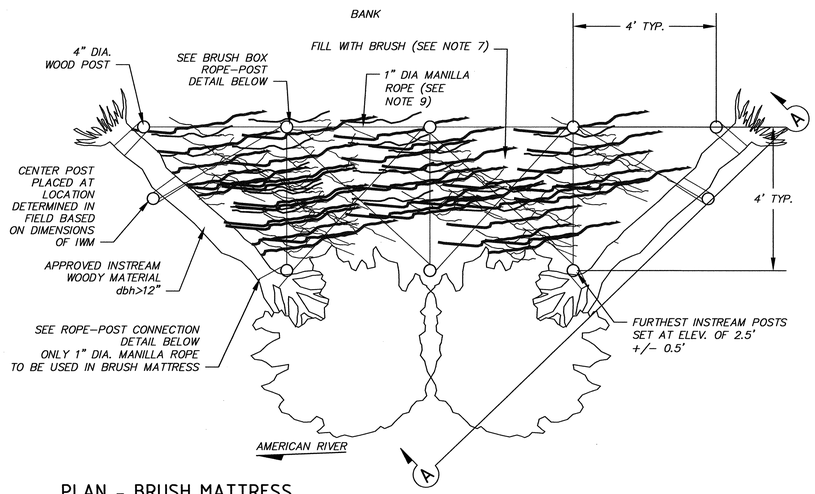

PLAN - BRUSH MATTRESS
SCALE: 1"=2'

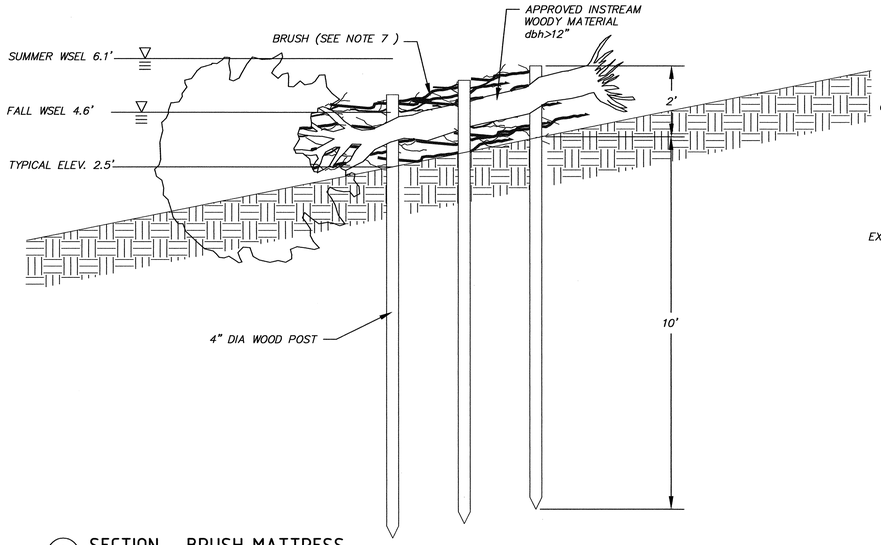

(A) SECTION - BRUSH MATTRESS
SCALE: 1"=2'

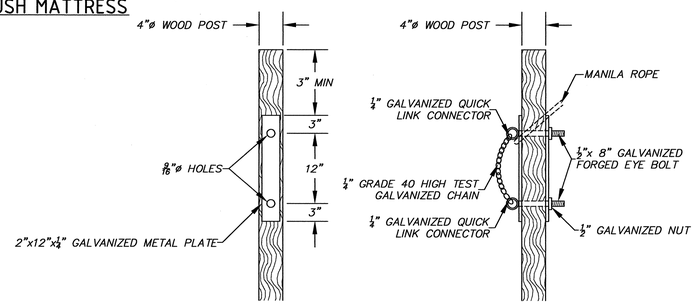

ROPE-POST CONNECTION DETAIL (BRUSH MATTRESS)
SCALE: 1"=1'

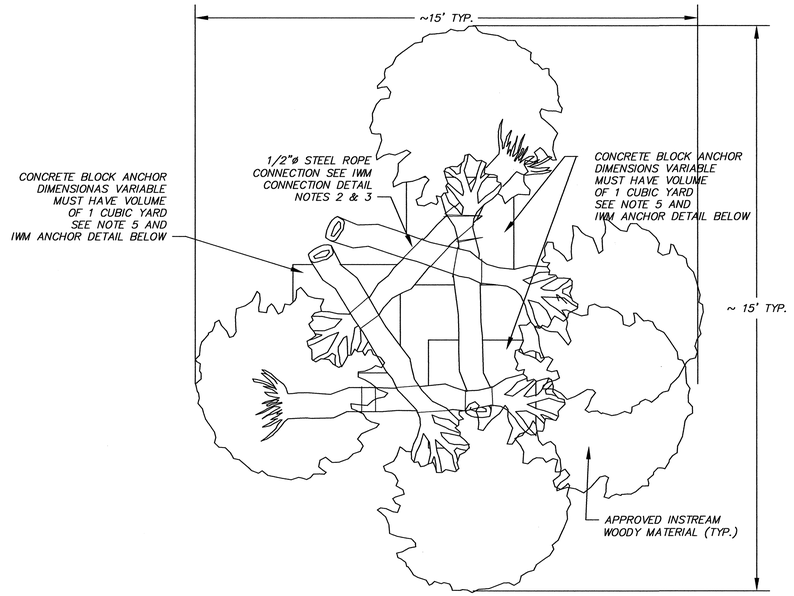

TYPICAL INSTREAM WOODY MATERIAL STRUCTURE
SCALE: 1"=2'

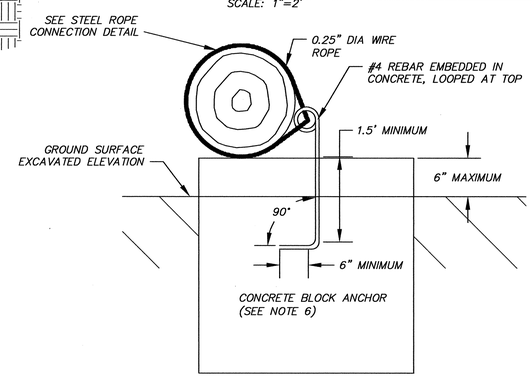

ANCHOR DETAIL (IWM STRUCTURE)
SCALE: 1"=1'

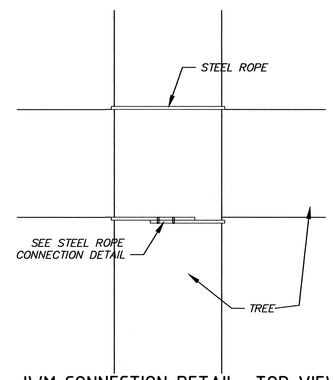

IWM CONNECTION DETAIL- TOP VIEW
SCALE: 1"=1'

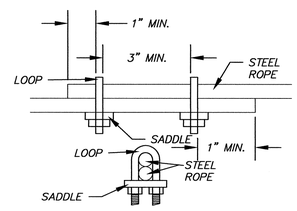

STEEL ROPE CONNECTION DETAIL
NOT TO SCALE

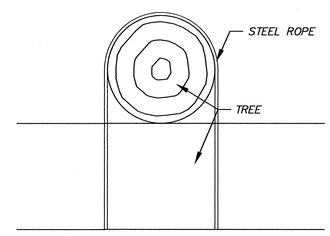

IWM CONNECTION DETAIL - SIDE VIEW
SCALE: 1"=1'

NOTES:

1. DUE TO VARIABILITY IN ACTUAL DIMENSIONS OF WOODY MATERIAL, CONSTRUCTED INSTREAM WOODY MATERIAL FEATURES MAY VARY FROM THE TYPICAL SECTION. HOWEVER, THE AS-BUILT STRUCTURE SHALL HAVE AN EQUIVALENT FOOTPRINT AS THE DESIGN AND AT MINIMUM, THE EQUIVALENT OF TWO ROOT WADS AND 5 LARGE CANOPIES IN THE FINAL STRUCTURE.
2. ALL INSTREAM WOODY MATERIAL SHALL BE TETHERED TO OTHER INSTREAM WOODY MATERIAL OR ANCHORED IN NO LESS THAN TWO LOCATIONS ALONG THE TRUNK.
3. STEEL ROPE USED IN IWM TO IWM CONNECTION SHOULD BE PULLED TIGHT TO REMOVE ALL THE SLACK IN THE STEEL ROPE.
4. IWM STRUCTURES SHALL BE CONSTRUCTED AT THE APPROXIMATE LOCATIONS AND ELEVATIONS AS SHOWN IN THE PLAN SHEET UNDER THE DIRECTION OF THE FIELD ENGINEER.
5. THREE CONCRETE BLOCKS, AT LEAST 1 CUBIC YARD IN VOLUME, SHALL BE USED TO ANCHOR IWM STRUCTURES IN PLACE. THE TOP ELEVATION OF THESE BLOCKS SHALL NOT EXCEED THE EXCAVATED GROUND ELEVATION BY MORE THAN 6".
6. ROPE USED TO SECURE BRUSH IN BRUSH MATTRESS SHALL BE LIMITED TO LENGTHS OF 20 FT. OR LESS, WITH BOTH ENDS FIRMLY SECURED TO A POST.
7. THE BRUSH FILLING OF EACH BRUSH MATTRESS SHALL BE COMPOSED OF HARDWOOD WITH THE APPROXIMATE SIZE DISTRIBUTION: 33% OF VOLUME SHALL HAVE DIAMETERS BETWEEN ½" AND 2"; 33% OF VOLUME SHALL HAVE DIAMETERS BETWEEN 2" AND 4"; AND 33% OF VOLUME SHALL HAVE DIAMETERS BETWEEN 4" AND 6". THE BRUSH SIZES SHOULD NOT BE SORTED AFTER PLACEMENT.
8. BRUSH MATTRESSES WILL BE LOCATED AT THE APPROXIMATE LOCATIONS SHOWN IN THE PLAN SHEET. EXACT PLACEMENT WILL BE IDENTIFIED BY THE FIELD ENGINEER.
9. THE AMOUNT OF ROPE SHOWN IN THE BRUSH MATTRESS PLANS ARE THE MINIMAL REQUIREMENT. THE FIELD ENGINEER MAY REQUIRE ADDITIONAL ROPE IF SHORT LENGTHS OF BRUSH REQUIRES IT.
10. CONTRACTOR MAY SUBMIT AN ALTERNATE ROPE-POST CONNECTION METHOD TO THE FIELD ENGINEER. UPON REVIEW AND APPROVAL OF THE FIELD ENGINEER, THE PROPOSED CONNECTION MAY BE USED IN LIEU OF THE CONNECTION SHOWN ON THE PLANS.

REGISTERED PROFESSIONAL ENGINEER
LEONARD J. HOWARD
No. 53319
6/18/09
Exp: 06/30/11
CIVIL
STATE OF CALIFORNIA

US Army Corps of Engineers
Sacramento District

Symbol	Description	Date	Approved

Designed by: BGW
Dwn by: TVS
Reviewed by: LJH
Submitted by: RICHARD A. TORBIK Chief, Civil Eng. Des. Sec. B
Spec. No.: 1668
Design file no: 50-25-6004
Drawing Code:
File name:
Plot date:
Dwg. scale: 1" = 20'
Date: 19 JUNE 2009
Rev:

Sacramento River Bank Protection Project
American River RM 0.5R Mitigation Site, California

HABITAT FEATURES DETAIL SHEET

Sheet reference number: C4

Sheet 7 of 12

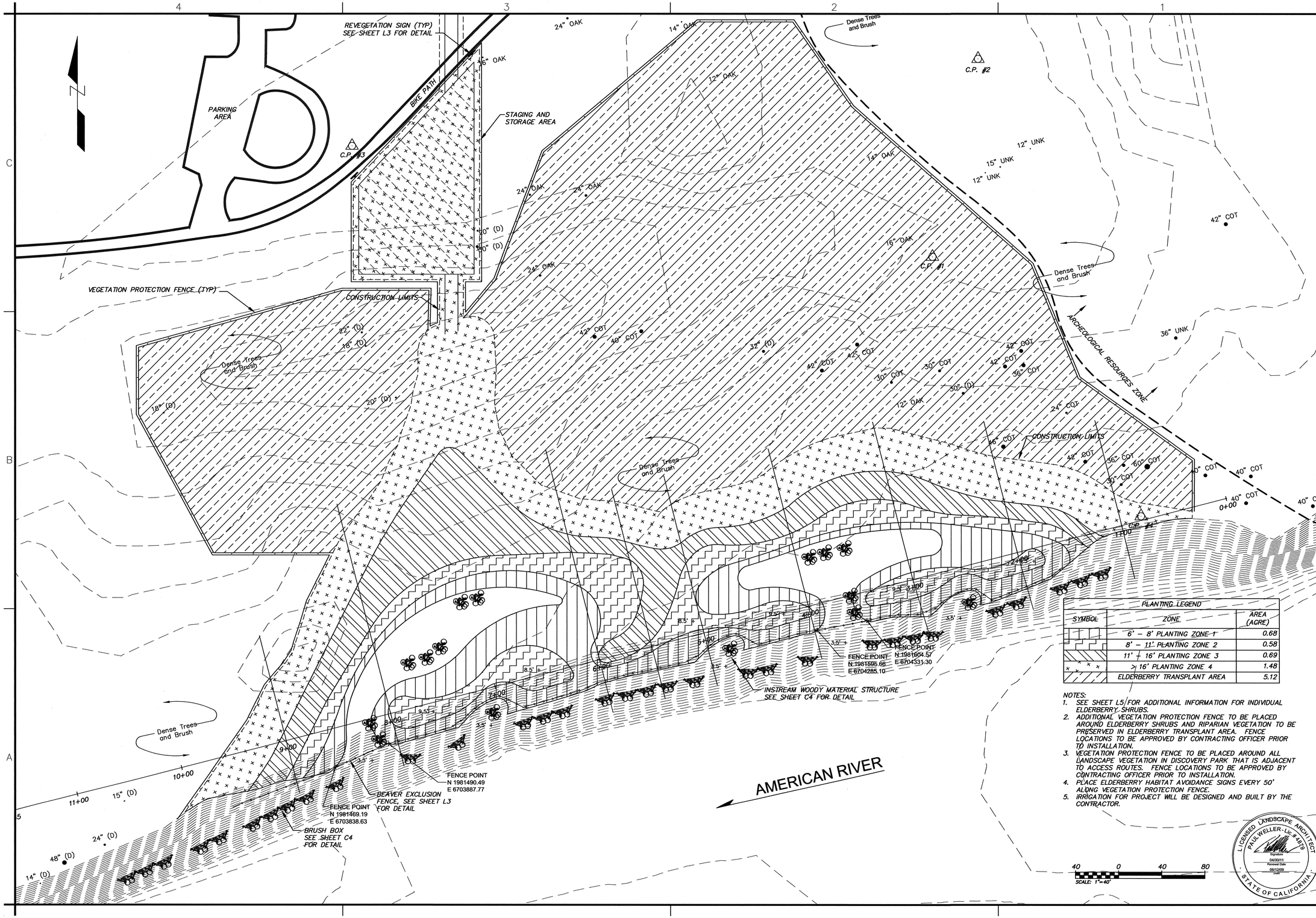

PLANTING LEGEND		
SYMBOL	ZONE	AREA (ACRE)
	6' – 8' PLANTING ZONE 1	0.68
	8' – 11' PLANTING ZONE 2	0.58
	11' – 16' PLANTING ZONE 3	0.69
	> 16' PLANTING ZONE 4	1.48
	ELDERBERRY TRANSPLANT AREA	5.12

NOTES:

1. SEE SHEET L5 FOR ADDITIONAL INFORMATION FOR INDIVIDUAL ELDERBERRY SHRUBS.
2. ADDITIONAL VEGETATION PROTECTION FENCE TO BE PLACED AROUND ELDERBERRY SHRUBS AND RIPARIAN VEGETATION TO BE PRESERVED IN ELDERBERRY TRANSPLANT AREA. FENCE LOCATIONS TO BE APPROVED BY CONTRACTING OFFICER PRIOR TO INSTALLATION.
3. VEGETATION PROTECTION FENCE TO BE PLACED AROUND ALL LANDSCAPE VEGETATION IN DISCOVERY PARK THAT IS ADJACENT TO ACCESS ROUTES. FENCE LOCATIONS TO BE APPROVED BY CONTRACTING OFFICER PRIOR TO INSTALLATION.
4. PLACE ELDERBERRY HABITAT AVOIDANCE SIGNS EVERY 50' ALONG VEGETATION PROTECTION FENCE.
5. IRRIGATION FOR PROJECT WILL BE DESIGNED AND BUILT BY THE CONTRACTOR.

LICENSED LANDSCAPE ARCHITECT
PAUL WELLER - LIC. # 4179
Signature
04/30/11
Renewal Date
06/12/09
Date
STATE OF CALIFORNIA

US Army Corps of Engineers
Sacramento District

Symbol	Description	Date	Approved

Designed by: HD
Dwn by: KT/PW
Spec No.: 1668
Reviewed by: HD
Submitted by: Richard A. Toralk, Chief, Civil Eng. Sec. B
Date: 19 JUNE 2009
Rev.
Design file no: 50-25-6004
Drawing Code:
File name:
Plot date: 19 JUNE 2009
Dwg scale:

California
Sacramento River Bank Protection Project
American River RM 0.5R Mitigation Site

PLANTING PLAN SHEET

Sheet reference number:
L1
Sheet 8 of 12

Planting Zone	Planting Location	Botanical Name	Common Name	Average Zone Plant Spacing (feet on-center)	Plant Distribution	Container Plants		% plant palette	Estimated Area of Planting Zone
						Size	Quantity		
Zone 1	(Elev. 6' – 8') Frequent, prolonged inundation; wake zone	Cephalanthus occidentalis	Button bush	2	Install throughout planting zone	Treepot 4	1209	15%	32,246 sf
		Salix exigua	Narrow-leaved willow			Treepot 4	806	10%	
		Salix laevigata	Red willow			Treepot 4	806	10%	
		Salix gooddingii	Goodding's black willow			Treepot 4	806	10%	
		Salix lasiolepis	Arroyo willow			Treepot 4	1209	15%	
		Salix lutea	Yellow willow			Treepot 4	806	10%	
		Populus fremontii	Fremont Cottonwood			Treepot 4	1209	15%	
		Acer negundo	Box elder			Treepot 4	403	5%	
		Baccharis salicifolia	Mulefat			Treepot 4	806	10%	
Zone 2	(Elev. 8' – 11') Frequent, prolonged inundation; wake zone	Carex barbarae	Santa Barbara sedge	2	2.0 ft o.c. throughout zone	Tree band	2294	50%	18,351 sf
		Juncus effusus var. pacificus	Pacific rush			Tree band	2294	50%	
		Cephalanthus occidentalis	Button bush	6	Install throughout planting zone	Treepot 4	51	10%	
		Baccharis salicifolia	Mulefat			Treepot 4	51	10%	
		Salix exigua	Narrow-leaved willow			Treepot 4	52	10%	
		Salix laevigata	Red willow			Treepot 4	52	10%	
		Salix gooddingii	Goodding's black willow			Treepot 4	52	10%	
		Salix lasiolepis	Arroyo willow			Treepot 4	52	10%	
		Salix lucida ssp. lasiandra	Pacific willow			Treepot 4	52	10%	
		Populus fremontii	Fremont Cottonwood			Treepot 4	52	10%	
		Fraxinus latifolia	Oregon Ash			Treepot 4	52	10%	
		Acer negundo	Box elder			Treepot 4	26	5%	
		Alnus rhombifolia	White alder			Treepot 4	26	5%	
Zone 3	(Elev. 11' – 16') Lower back slopes & mid-slope benches	Leymus triticoides	Creeping wildrye	2	2.0 ft o.c. throughout area	Tree band	4497	60%	29,979 sf
		Artemisia douglasiana	Mugwort			Tree band	2249	30%	
		Vitis californica	Wild grape		Plant in clusters of 3, 2.0 ft o.c. throughout area	Treepot 4	750	10%	
		Rubus ursinus	California blackberry		Plant in clusters of 3 around each cottonwood	Treepot 4	250		
		Rosa californica	California wild rose		Plant in clusters of 3 around each sycamore	Treepot 4	500		
		Baccharis salicifolia	Mulefat	6	Install throughout planting zone	Treepot 4	125	15%	
		Baccharis pilularis	Coyote brush			Treepot 4	83	10%	
		Fraxinus latifolia	Oregon ash			Treepot 4	42	5%	
		Acer negundo	Box elder			Treepot 4	42	5%	
		Platanus racemosa	California Sycamore			Treepot 4	167	20%	
		Populus fremontii	Fremont cottonwood			Treepot 4	83	10%	
		Quercus lobata	Valley oak			Treepot 4	292	35%	
Zone 4	(Elev. 16' – 24') Highest zone, low duration/frequent inundation	Leymus triticoides	Creeping wildrye	2	2.0 ft o.c. throughout area	Tree band	9696	60%	64,640 sf
		Artemisia douglasiana	Mugwort			Tree band	4848	30%	
		Vitis californica	Wild grape		Plant in clusters of 3, 2.0 ft o.c. throughout area	Treepot 4	1616	10%	
		Baccharis pilularis	Coyote brush	6	Install throughout planting zone	Treepot 4	81	5%	
		Fraxinus latifolia	Oregon ash			Treepot 4	81	5%	
		Acer negundo	Box elder			Treepot 4	81	5%	
		Platanus racemosa	California sycamore			Treepot 4	324	20%	
		Populus fremontii	Fremont cottonwood			Treepot 4	162	10%	
		Quercus lobata	Valley oak			Treepot 4	486	30%	
		Sambucus mexicana	Elderberry		Install in designated clusters only	Treepot 4	405	25%	
Elderberry Transplant Area	See Plans	Artemisia douglasiana	Mugwort	6	Plant in clusters of 3, 2.0 ft o.c. throughout area	Tree band	2890	50%	208,068 sf
		Vitis californica	Wild grape			Treepot 4	2889	50%	
		Acer negundo	Box elder	20	Install throughout planting zone	Treepot 4	26	5%	
		Platanus racemosa	California sycamore			Treepot 4	78	15%	
		Populus fremontii	Fremont cottonwood			Treepot 4	52	10%	
		Quercus lobata	Valley oak			Treepot 4	156	30%	
		Sambucus mexicana	Elderberry		Install in designated clusters only	Treepot 4	208	40%	

LICENSED LANDSCAPE ARCHITECT
PAUL WELLER - Lic. # 4379
Expiration Date
04/30/11
Renewal Date
06/12/09
Date
STATE OF CALIFORNIA

US Army Corps of Engineers
Sacramento District

Symbol	Description	Date	Approved

Designed by: HQ
Dwn by: KT/PW
Spec No.: 16668
Reviewed by: HQ
Submitted by: Richard A. Torok, Chief, Cst Eng. Des. Sec. B
Date: 19 JUNE 2009
Design file no: 50-25-6004
Drawing Code:
Rev:
File name:
Plot date: 19 JUNE 2009
Dwg scale:

California
Sacramento River Bank Protection Project
American River RM 0.5R Mitigation Site

PLANTING PROGRAM SHEET

Sheet reference number: L2

Sheet 9 of 12

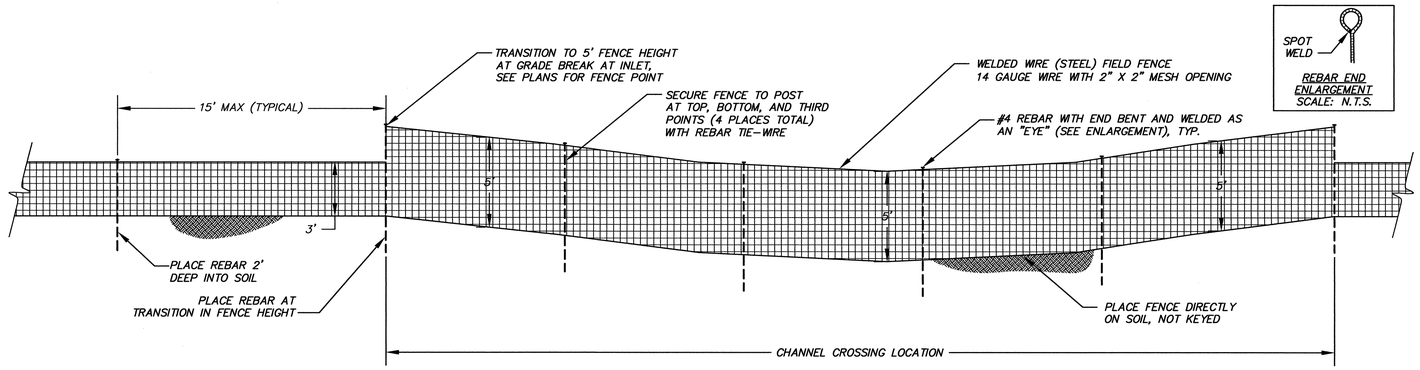

NOTES:
1. BEAVER FENCE SHALL BE INSTALLED ON THE BANK AS SHOWN ON THE PLANTING PLAN – TYPICAL SECTION ABOVE. THE FENCE SHALL BE INSTALLED WITH THE BASE AT ELEVATION 6' AND SHALL EXTEND THE ENTIRE LENGTH OF PROJECT, EXCEPT AT IDENTIFIED CHANNEL CROSSING LOCATIONS. CONNECT EACH END TO VEGETATION PROTECTION FENCE. THE FENCE SHALL BE PLACED TO SPAN THE INLET AND SHALL INCREASE TO 5' HIGH ACROSS THE INLET, FOLLOWING THE GRADE OF THE INLET.

BEAVER EXCLUSION FENCING
SCALE: 1"=4'

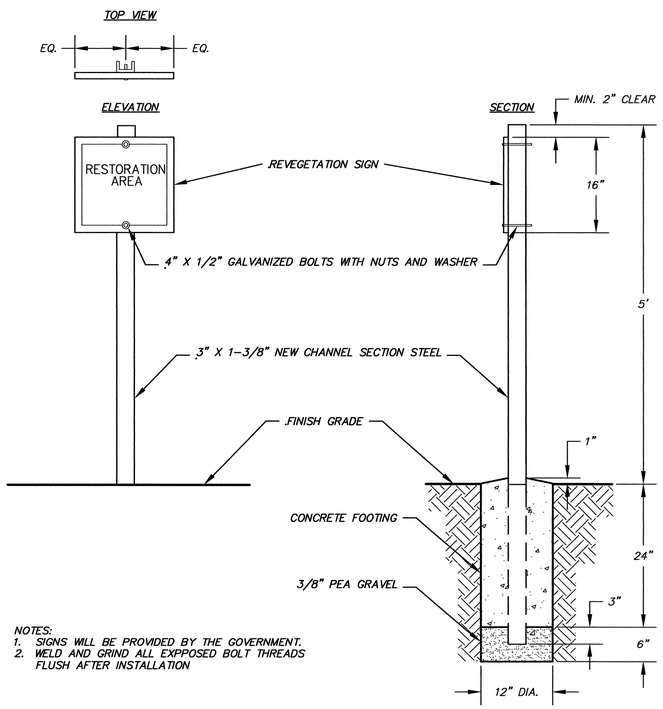

NOTES:
1. SIGNS WILL BE PROVIDED BY THE GOVERNMENT.
2. WELD AND GRIND ALL EXPPOSED BOLT THREADS FLUSH AFTER INSTALLATION

REVEGETATION SIGN
SCALE: 1"=1'

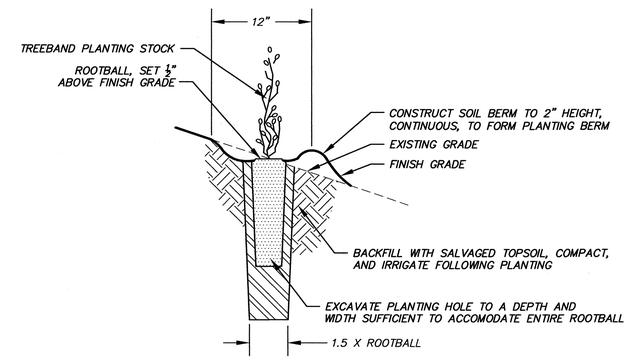

TREEBAND INSTALLATION
NOT TO SCALE

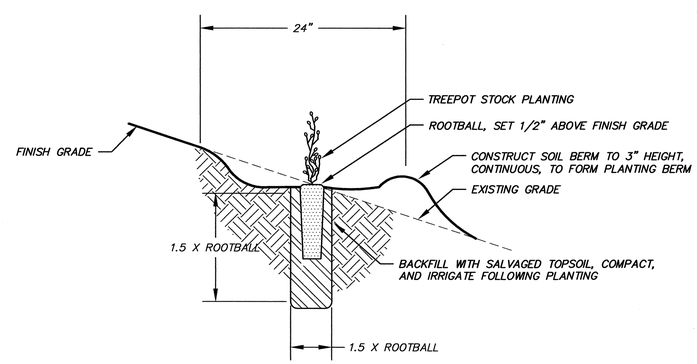

TREEPOT INSTALLATION
NOT TO SCALE

LICENSED LANDSCAPE ARCHITECT
PAUL WELLER - Lic. # 4879
Signature
04/30/11
Renewal Date
06/12/09
Date
STATE OF CALIFORNIA

US Army Corps of Engineers
Sacramento District

Symbol	Description	Date	Approved

Designed by: HQ
Dwn by: KT/PW
Reviewed by: HQ
Submitted by: Richard A. Torbik, Chief, Civil Eng.Sec. B
Spec No.: 1668
Date: 19 JUNE 2009
Design file no: 50-25-6004
Drawing Code:
File name:
Plot date: 19 JUNE 2009
Dwg scale:
Rev.

California
Sacramento River Bank Protection Project
American River RM 0.5R Mitigation Site

PLANTING DETAIL SHEET

Sheet reference number:
L3
Sheet 10 of 12

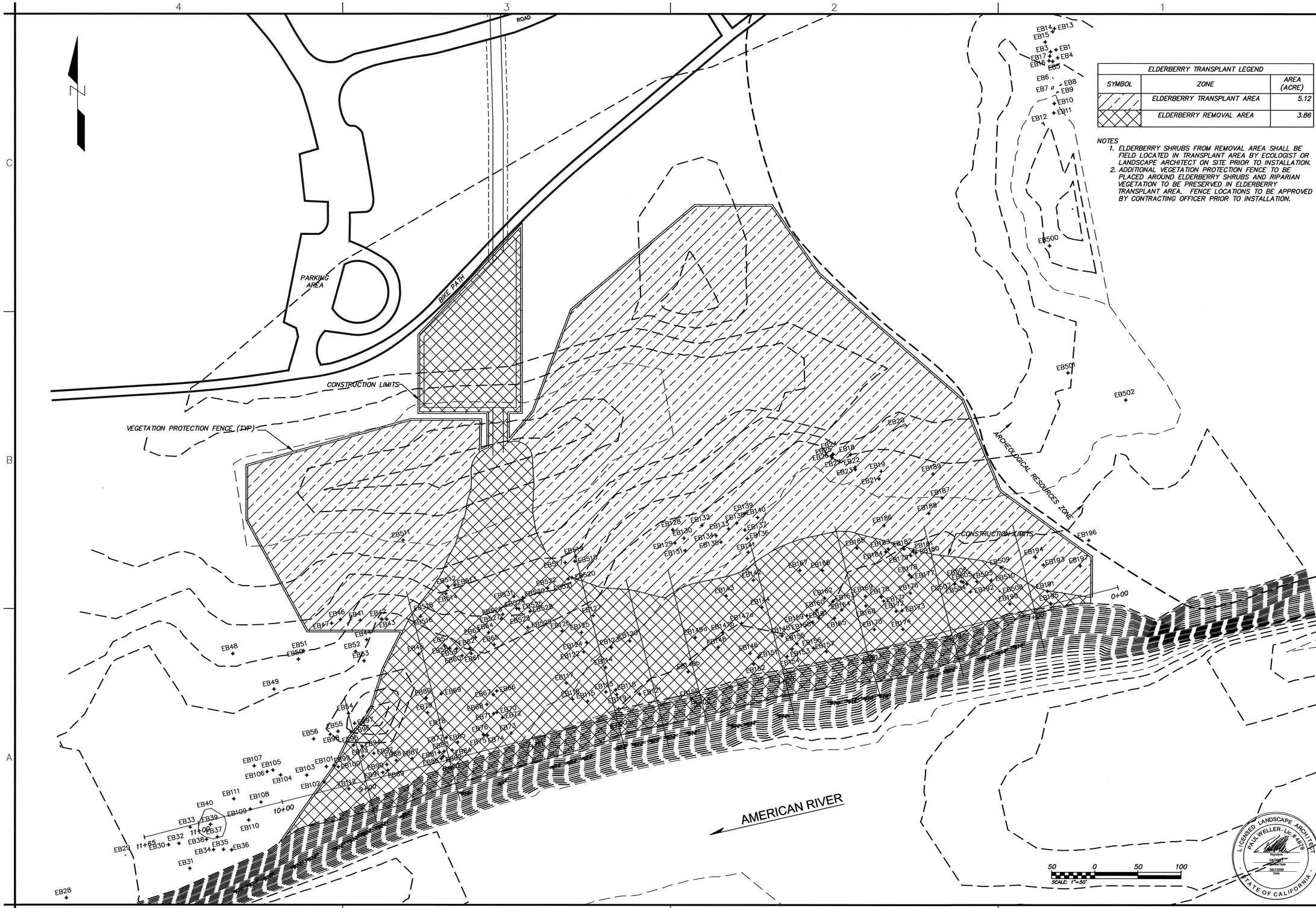

ELDERBERRY TRANSPLANT LEGEND		
SYMBOL	ZONE	AREA (ACRE)
	ELDERBERRY TRANSPLANT AREA	5.12
	ELDERBERRY REMOVAL AREA	3.86

NOTES
1. ELDERBERRY SHRUBS FROM REMOVAL AREA SHALL BE FIELD LOCATED IN TRANSPLANT AREA BY ECOLOGIST OR LANDSCAPE ARCHITECT ON SITE PRIOR TO INSTALLATION.
2. ADDITIONAL VEGETATION PROTECTION FENCE TO BE PLACED AROUND ELDERBERRY SHRUBS AND RIPARIAN VEGETATION TO BE PRESERVED IN ELDERBERRY TRANSPLANT AREA. FENCE LOCATIONS TO BE APPROVED BY CONTRACTING OFFICER PRIOR TO INSTALLATION.

US Army Corps of Engineers
Sacramento District

Symbol	Description	Date	Approved

Designed by: HO
Dwn by: KT/PW
Reviewed by: HO
Submitted by: Richard A. Tarbik, Chief, Civil Eng. Des. Sec. B
Date: 19 JUNE 2009
Rev.
Spec No.: 1668
Design file no: 50-25-6004
Drawing Code:
File name:
Plot date: 19 JUNE 2009
Dwg scale:

California
Sacramento River Bank Protection Project
American River RM 0.5R Mitigation Site

ELDERBERRY TRANSPLANT PLAN SHEET

Sheet reference number:
L4
Sheet 11 of 12

SHRUB OR CLUSTER ID NUMBER	NUMBER OF STEMS (1 – 3 INCHES)	NUMBER OF STEMS (3 – 5 INCHES)	NUMBER OF STEMS (GREATER THAN 5 INCHES)	EXIT HOLES PRESENT (Y/N)	SHRUB HEIGHT (FT)	SHRUB OR CLUSTER	ELDERBERRY TO BE TRANSPLANTED (Y/N)	ELDERBERRY WITHIN/ OUTSIDE 100 FOOT BUFFER (Y/N)
1	0	0	5	N	30	SHRUB	N	Y
2 *	0	0	0	N	0	SHRUB	N	Y
3	0	0	1	N	25	SHRUB	N	Y
4	0	0	5	N	35	SHRUB	N	Y
5	0	1	2	N	20	SHRUB	N	Y
6	1	5	1	N	40	CLUSTER	N	Y
7	6	2	0	N	14	SHRUB	N	Y
8	0	0	2	N	35	SHRUB	N	Y
9	0	0	3	N	25	CLUSTER	N	Y
10	0	0	2	N	18	SHRUB	N	Y
11	0	1	2	N	25	SHRUB	N	Y
12	8	0	0	N	12	CLUSTER	N	Y
13	0	0	2	N	30	SHRUB	N	Y
14	0	0	1	N	18	SHRUB	N	Y
15	0	0	1	N	10	SHRUB	N	Y
16	0	1	0	N	10	SHRUB	N	Y
17	0	0	1	N	5	SHRUB	N	Y
18	2	0	0	N	12	SHRUB	N	Y
19	2	1	0	N	10	SHRUB	N	Y
20	5	10	10	N	12	CLUSTER	N	Y
21	2	0	0	N	12	SHRUB	N	Y
22	4	0	0	N	15	SHRUB	N	Y
23	3	1	0	N	15	SHRUB	N	Y
24	2	0	0	N	10	SHRUB	N	Y
25	1	1	0	N	10	SHRUB	N	Y
26	3	1	0	N	12	SHRUB	N	Y
27	2	2	0	N	20	SHRUB	N	Y
28	3	2	0	N	9	SHRUB	N	Y
29	50	20	0	N	22	CLUSTER	N	Y
30	5	1	0	N	13	SHRUB	N	Y
31	7	3	1	N	17	SHRUB	N	Y
32	6	2	0	N	9	SHRUB	N	Y
33	8	3	1	N	14	SHRUB	N	Y
34	20	8	3	N	15	SHRUB	N	Y
35	12	5	0	N	13	SHRUB	N	Y
36	10	4	0	N	11	SHRUB	N	Y
37	12	4	0	N	12	SHRUB	N	Y
38	12	4	0	N	14	SHRUB	N	Y
39	10	5	0	N	8	SHRUB	N	Y
40	50	20	0	N	25	CLUSTER	N	Y
41	15	4	1	N	18	SHRUB	N	Y
42	12	3	0	N	15	SHRUB	N	Y
43	10	3	0	N	13	SHRUB	N	Y
44	10	5	1	N	20	SHRUB	N	Y
45	10	7	1	N	22	SHRUB	Y	N
46	12	5	1	N	18	SHRUB	N	Y
47	8	3	0	N	16	SHRUB	N	Y
48	15	6	1	N	24	SHRUB	N	Y
49	12	5	1	N	22	SHRUB	N	Y
50	6	3	0	N	12	SHRUB	N	Y
51	8	3	0	N	14	SHRUB	N	Y
52	10	4	0	N	17	SHRUB	N	Y
53	12	6	1	N	20	SHRUB	N	Y
54	10	5	0	N	15	SHRUB	N	Y
55	8	4	0	N	14	SHRUB	N	Y
56	10	4	0	N	12	SHRUB	N	Y
57	3	0	0	N	8	SHRUB	Y	N
58	6	0	0	N	10	SHRUB	Y	N
59	5	1	0	N	10	SHRUB	Y	N
60	5	0	0	N	6	SHRUB	Y	N
61	2	1	0	N	9	SHRUB	Y	N
62	2	0	0	N	8	SHRUB	Y	N
63	5	0	0	N	6	SHRUB	Y	N
64	7	2	0	N	12	SHRUB	Y	N
65	5	0	0	N	12	SHRUB	Y	N
66	4	1	0	N	12	SHRUB	Y	N
67	6	1	0	N	14	SHRUB	Y	N
68	3	0	0	N	7	SHRUB	Y	N
69	6	2	0	N	14	SHRUB	Y	N
70	7	3	1	N	14	SHRUB	Y	N
71	3	2	0	N	12	SHRUB	Y	N
72	6	1	0	N	10	SHRUB	Y	N
73	2	1	0	N	6	SHRUB	Y	N
74	1	0	0	N	6	SHRUB	Y	N
75	3	1	0	N	12	SHRUB	Y	N
76	1	1	0	N	12	SHRUB	Y	N
77	5	3	2	N	16	SHRUB	Y	N
78	4	3	1	N	14	SHRUB	Y	N
79	4	1	0	N	10	SHRUB	Y	N
80	3	0	0	N	12	SHRUB	Y	N
81	2	2	0	N	10	SHRUB	Y	N
82	3	2	0	N	12	SHRUB	Y	N
83	2	0	0	N	8	SHRUB	Y	N
84	3	2	0	N	12	SHRUB	Y	N
85	1	2	4	N	15	SHRUB	Y	N
86	3	1	0	N	11	SHRUB	Y	N
87	4	3	2	N	14	SHRUB	Y	N
88	6	3	1	N	12	SHRUB	Y	N
89	4	2	0	N	12	SHRUB	Y	N
90	6	1	0	N	11	SHRUB	Y	N
91	8	2	0	N	14	SHRUB	Y	N
92	6	2	0	N	14	SHRUB	Y	N
93	4	1	0	N	10	SHRUB	Y	N
94	8	1	0	N	14	SHRUB	Y	N
95	8	6	2	N	16	SHRUB	Y	N
96	6	2	0	N	12	SHRUB	N	Y
97	10	3	2	N	16	SHRUB	N	Y
98	3	0	2	N	6	SHRUB	N	Y
99	3	1	0	N	10	SHRUB	N	Y
100	8	3	0	N	10	SHRUB	Y	N
101	9	2	1	N	12	SHRUB	N	Y
102	5	4	1	N	14	SHRUB	Y	N
103	10	4	1	N	15	SHRUB	N	Y
104	10	1	1	N	13	SHRUB	N	Y
105	7	0	0	N	10	SHRUB	N	Y
106	6	3	1	N	12	SHRUB	N	Y
107	5	2	2	N	13	SHRUB	N	Y
108	6	0	0	N	10	SHRUB	N	Y
109	10	2	1	N	14	SHRUB	N	Y
110	9	2	0	N	11	SHRUB	N	Y
111	12	4	2	N	20	SHRUB	N	Y
112	9	3	0	N	14	SHRUB	Y	N
113	12	2	0	N	16	SHRUB	Y	N
114	5	1	0	N	14	SHRUB	Y	N
115	8	2	1	N	17	SHRUB	Y	N
116	10	2	0	N	14	SHRUB	Y	N
117	13	3	1	N	16	SHRUB	Y	N
118	8	3	0	N	16	SHRUB	Y	N
119	7	2	0	N	14	SHRUB	Y	N
120	11	3	0	N	16	SHRUB	Y	N
121	3	0	0	N	8	SHRUB	Y	N
122	4	0	0	N	10	SHRUB	Y	N
123	8	2	0	N	13	SHRUB	Y	N
124	4	0	0	N	8	SHRUB	Y	N
125	6	1	0	N	10	SHRUB	Y	N
126	12	3	0	N	14	SHRUB	Y	N
127	9	4	0	N	12	SHRUB	Y	N
128	13	5	1	N	16	SHRUB	N	Y
129	11	3	0	N	13	SHRUB	N	Y
130	12	4	1	N	15	SHRUB	N	Y
131	15	3	0	N	14	SHRUB	N	Y
132	12	2	1	N	14	SHRUB	N	Y
133	15	3	0	N	16	SHRUB	N	Y
134	2	0	0	N	6	SHRUB	N	Y
135	9	3	0	N	14	SHRUB	N	Y
136	2	0	0	N	6	SHRUB	N	Y
137	3	1	0	N	12	SHRUB	N	Y
138	5	2	0	N	14	SHRUB	N	Y
139	7	3	0	N	14	SHRUB	N	Y
140	9	3	0	N	15	SHRUB	N	Y
141	5	1	0	N	10	SHRUB	N	Y
142	12	3	0	N	15	SHRUB	Y	N
143	14	3	1	N	16	SHRUB	Y	N
144	3	0	1	N	8	SHRUB	Y	N
145	2	0	0	N	12	SHRUB	Y	N
146	3	0	0	N	8	SHRUB	Y	N
147a	2	0	0	N	8	SHRUB	Y	N
147b	3	1	0	N	10	SHRUB	Y	N
148	6	1	0	N	12	SHRUB	Y	N
149a	8	2	0	N	14	SHRUB	Y	N
149b	6	2	0	N	12	SHRUB	Y	N
150	12	4	1	N	14	SHRUB	Y	N
151	3	1	1	N	14	SHRUB	Y	N
152	3	0	0	N	8	SHRUB	Y	N
153	3	0	0	N	10	SHRUB	Y	N
154	1	0	0	N	7	SHRUB	Y	N
155	3	1	0	N	10	SHRUB	Y	N
156	4	0	0	N	12	SHRUB	Y	N
157	7	2	0	N	14	SHRUB	Y	N
158	2	1	1	N	16	SHRUB	Y	N
159	1	1	0	N	15	SHRUB	Y	N
160	2	1	0	N	11	SHRUB	Y	N
161	2	0	0	N	7	SHRUB	Y	N
162	5	0	0	N	11	SHRUB	Y	N
163	0	1	0	N	9	SHRUB	Y	N
164	3	0	0	N	9	SHRUB	Y	N
165	2	0	0	N	6	SHRUB	Y	N
166	3	2	3	N	18	SHRUB	Y	N
167	2	0	0	N	12	SHRUB	Y	N
168	4	1	0	N	12	SHRUB	Y	N
169	5	0	1	N	13	SHRUB	Y	N
170	4	2	2	N	15	SHRUB	Y	N
171	3	1	0	N	13	SHRUB	Y	N
172	4	1	0	N	13	SHRUB	Y	N
173	5	2	0	N	13	SHRUB	Y	N
174	6	2	0	N	12	SHRUB	Y	N
175	4	1	0	N	10	SHRUB	Y	N
176	0	1	0	N	12	SHRUB	Y	N
177	7	3	0	N	14	SHRUB	Y	N
178	5	2	0	N	14	SHRUB	Y	N
179	0	1	0	N	6	SHRUB	Y	N
180	3	2	1	N	6	SHRUB	Y	N
181	5	2	0	N	12	SHRUB	Y	N
182	4	2	0	N	14	SHRUB	Y	N
183	6	2	0	N	12	SHRUB	Y	N
184	2	1	0	N	8	SHRUB	Y	N
185	6	2	1	N	17	SHRUB	Y	N
186	8	1	1	N	14	SHRUB	N	Y
187	10	1	0	N	16	SHRUB	N	Y
188	8	2	0	N	15	SHRUB	N	Y
189	6	3	0	N	17	SHRUB	N	Y
190	3	1	0	N	12	SHRUB	Y	N
191	5	1	0	N	14	SHRUB	Y	N
192	6	1	0	N	12	SHRUB	Y	N
193	8	1	0	N	8	SHRUB	N	Y
194	3	0	0	N	9	SHRUB	N	Y
195	3	0	0	N	6	SHRUB	Y	N
196	5	1	0	N	14	SHRUB	N	Y
197	4	0	0	N	14	SHRUB	N	Y
500	0	3	0	N	20	SHRUB	N	Y
501 *	0	0	0	N	0	SHRUB	N	Y
502	4	0	0	N	10	SHRUB	N	Y
503	1	0	2	N	0	SHRUB	Y	N
504	4	0	2	N	0	SHRUB	Y	N
505	0	1	0	N	0	SHRUB	Y	N
506	2	2	0	N	0	SHRUB	Y	N
507	1	0	0	N	0	SHRUB	Y	N
508	5	0	0	N	0	CLUSTER	Y	N
509	2	1	0	N	0	SHRUB	Y	N
510	3	1	0	N	0	SHRUB	Y	N
511 *	0	0	0	N	0	SHRUB	N	Y
512	1	0	0	N	0	SHRUB	Y	N
513	6	1	0	N	0	SHRUB	Y	N
514 *	0	0	0	N	0	SHRUB	Y	N
515	3	2	0	N	0	CLUSTER	Y	N
516	3	0	0	N	0	SHRUB	Y	N
517	4	3	0	N	0	SHRUB	N	Y
518	1	0	0	N	0	SHRUB	N	Y
519	4	0	0	N	0	SHRUB	N	Y
520	1	0	0	N	0	SHRUB	Y	N
521	1	0	0	N	0	SHRUB	Y	N
522	2	1	0	N	0	SHRUB	Y	N
523	11	1	0	N	0	CLUSTER	Y	N
524	1	0	0	N	0	SHRUB	Y	N
525	1	0	0	N	0	SHRUB	Y	N
526	4	0	0	N	0	SHRUB	Y	N
527	1	0	0	N	0	SHRUB	Y	N
528	6	0	0	N	0	SHRUB	Y	N
529	4	0	0	N	0	SHRUB	Y	N
530	1	0	0	N	0	SHRUB	Y	N
531	7	0	0	N	0	SHRUB	Y	N

NOTES

1. * SHRUBS 2, 501, AND 511 ARE DEAD; SHRUB 514 IS LESS THAN 1 INCH
2. ADDITIONAL ELDERBERRY SHRUBS MAY BE PRESENT IN WORK AREA AND TRANSPLANT AREA. ADDITIONAL ELDERBERRY SHRUBS IN WORK AREA SHALL BE TRANSPLANTED , ADDITIONAL ELDERBERRY SHRUBS IN TRANSPLANT AREA SHALL BE PRESERVED.
3. SEE SPECIFICATION SECTION 329600 TRANSPLANTING EXTERIOR PLANTS AND SECTION 311100 CLEARING AND GRUBBING FOR SPECIFIC INFORMATION REGARDING GRADING AND VEGETATION REMOVAL AROUND ELDERBERRY SHRUBS AND ENTIRE WORK AREA. HAND CLEARING WILL BE REQUIRED AS WELL AS TAGGING OF SHRUBBERY.

LICENSED LANDSCAPE ARCHITECT
PAUL WELLER - Lic. # 4879
Signature
04/30/11
Renewal Date
06/12/09
Date
STATE OF CALIFORNIA

US Army Corps of Engineers
Sacramento District

Symbol	Description	Date	Approved

Designed by: HO
Date: 19 JUNE 2009
Rev.
Dwn by: KT/PW
Spec No.: 1668
Design file no: 50-25-6004
Drawing Code:
Reviewed by: HO
Submitted by: Richard A. Tortak Chief, Civil Eng. Des. Sec. B
File name:
Plot date: 19 JUNE 2009
Dwg. scale:

California
Sacramento River Bank Protection Project
American River RM 0.5R Mitigation Site

ELDERBERRY TRANSPLANT TABLE SHEET

Sheet reference number: L5

Sheet 12 of 12