PINE AVENUE IMPROVEMENTS PLAN
From ±1,200' West to Rincon Meadows Avenue to ± 250' East of Rincon Meadows Avenue

IN THE

CITY OF CHINO

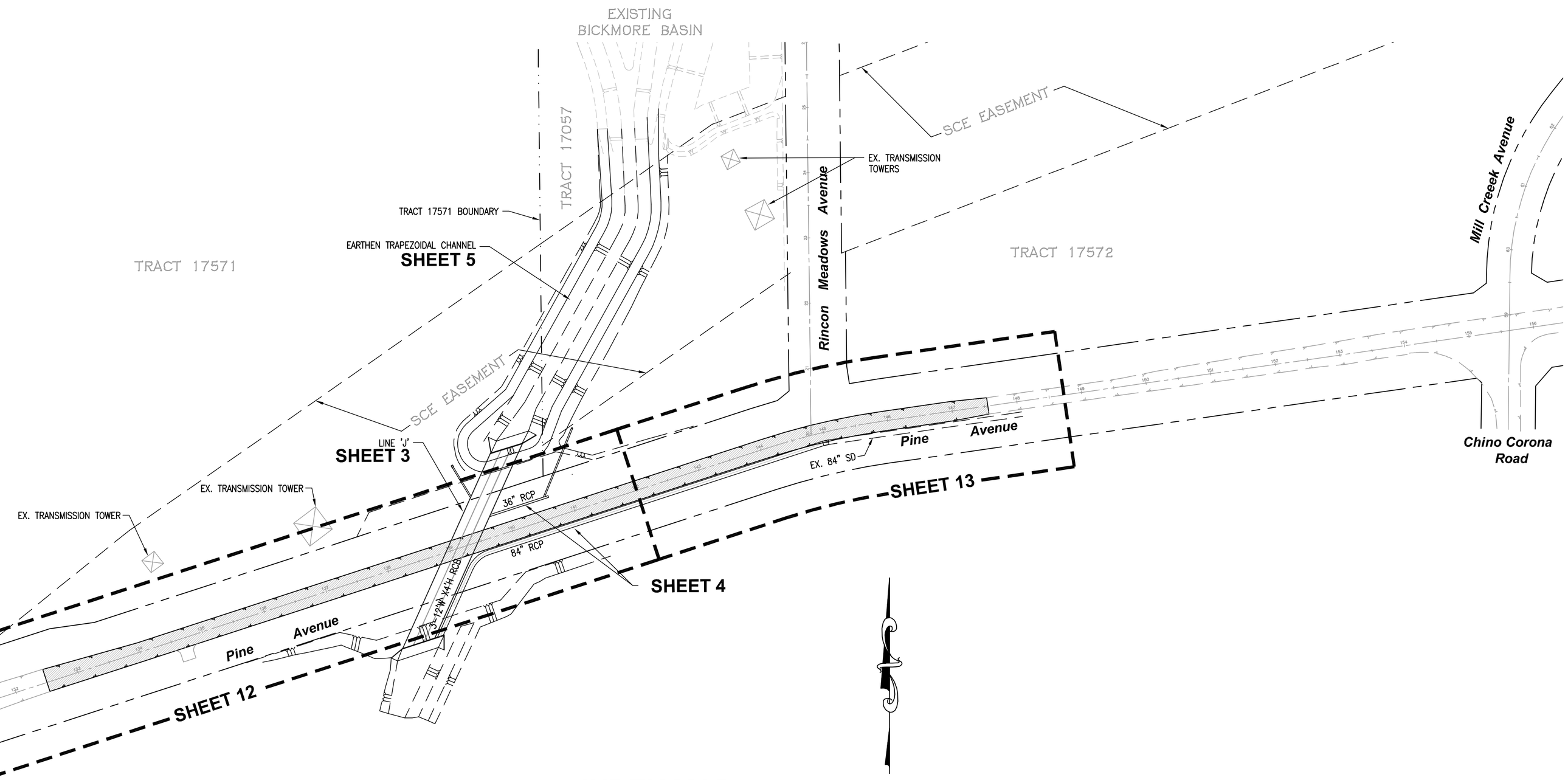

INDEX MAP
SCALE: 1"=100'

SHEET INDEX

SHEET 1 – TITLE, INDEX MAP & VICINITY MAP

SHEET 2 – GENERAL NOTES, LEGENDS, & ABBREVIATIONS

SHEET 3 – STORM DRAIN LINE 'J' (12'W X 4'H RCB) PLAN & PROFILE

SHEET 4 – STORM DRAIN LINE 'A' (84" RCP) PLAN & PROFILE

SHEET 5 – STORM DRAIN LATERALS 'J–2', 'J–3', 'A–1' PROFILES & DRAINAGE DETAILS

SHEET 6 TO 9 – DRAINAGE DETAILS

SHEET 10 – EARTHEN CHANNEL ROUGH GRADING

SHEET 11 – STREET SECTIONS AND DETAILS

SHEET 12 – PLAN & PROFILE, PINE AVENUE FROM STA. 132+50.00 TO 142.00

SHEET 13 – PLAN & PROFILE, PINE AVENUE FROM STA. 142+00.00 TO 147+55.00

ENGINEER'S NOTICE TO CONTRACTORS

THE EXISTENCE AND LOCATION OF ANY UNDERGROUND UTILITY PIPES OR STRUCTURES SHOWN ON THESE PLANS WERE OBTAINED BY A SEARCH OF AVAILABLE RECORDS. LOCATIONS ARE APPROXIMATE AND SHALL BE CONFIRMED IN THE FIELD BY THE CONTRACTOR, SO THAT ANY NECESSARY ADJUSTMENT CAN BE MADE IN ALIGNMENT AND/OR GRADE OF THE PROPOSED IMPROVEMENT. THE CONTRACTOR IS REQUIRED TO TAKE DUE PRECAUTIONARY MEASURE TO PROTECT ANY UTILITY LINES SHOWN AND ANY OTHER LINES NOT OF RECORD OR NOT SHOWN ON THESE PLANS.

Underground Service Alert
Call: TOLL FREE
1–800
227–2600
TWO WORKING DAYS BEFORE YOU DIG

BASIS OF BEARINGS

THE BEARING N89°24'51"E FOR THE CENTERLINE OF BICKMORE AVENUE AS SHOWN ON RECORD OF SURVEY 02–059, FILED IN BOOK 118, PAGES 96 THROUGH 101, INCLUSIVE, IN THE OFFICE OF THE COUNTY RECORDER OF SAN BERNARDINO COUNTY, WAS USED AS THE BASIS OF BEARINGS FOR THIS MAP.

SEAL

REGISTERED PROFESSIONAL ENGINEER
CARLA E. BERARD
No. 45183
Exp. 9/30/08
CIVIL
STATE OF CALIFORNIA

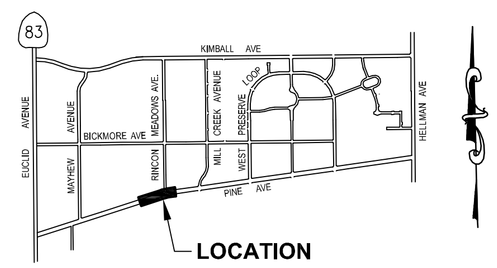

VICINITY MAP
NTS

PRELIMINARY
NOT FOR CONSTRUCTION

PREPARED BY	REVISIONS	MADE BY	MADE DATE	APPROVED BY	APPROVED DATE
FIRM: L.D. KING, INC.					
ADDRESS: 2151 Convention Center Way, Ste. 100					
Ontario, CA. 91764					
TELEPHONE: (909)937–0200 FAX: (909)937–0202					
SIGNATURE RCE 45183 DATE					

BENCH MARK DATA
NO. 157/71 ELEV. 595.256
LOCATION:
A 2 1/2" brass disk stamped "157/71" set in a traffic signal concrete base located at a northwest intersection of Euclid Avenue and Kimball Avenue

REFERENCE DRAWINGS

REVIEWED BY STAFF	BY	DATE
WATER:		
SEWER:		
FIRE:		
PLANNING:		
TRAFFIC:		
SERVICES:		

CITY ENGINEER'S STAFF	BY	DATE
DRAWN:		
DESIGNED:		
CHECKED:		
RECOMMENDED:		

APPROVED BY:

DIRECTOR OF PUBLIC WORKS/CITY ENGINEER

DATE: _____

CITY OF CHINO ENGINEERING DIVISION

PINE AVENUE IMPROVEMENTS PLAN

TITLE, INDEX MAP & VICINITY MAP

PROJECT NO.

SHEET 1 OF 13

DRAWING NO.

JN 481178 LEWIS OPERATING CORP. E:\400-499\481\0481-178\PLANS\StormStreet\481178-01title.dwg, Plotted: Jan 31, 2013 – 10:03am

1/31/2013

STREET IMPROVEMENTS GENERAL NOTES

1. THESE DRAWINGS AND THE DATA HEREIN SHALL BE A PART OF THE SPECIFICATIONS.
2. WORK SHALL BE DONE IN ACCORDANCE WITH THE CITY OF CHINO STANDARD DRAWINGS, STANDARD SPECIAL PROVISIONS, SPECIAL PROJECT PROVISIONS AND STANDARD SPECIFICATIONS FOR PUBLIC WORKS CONSTRUCTION, LATEST EDITION WITH SUPPLEMENTS. GENERAL NOTES SHALL BE APPROVED BY THE DIRECTOR OF PUBLIC WORKS/CITY ENGINEER.
3. MATERIALS AND METHODS SHALL BE SUBJECT TO APPROVAL BY DIRECTOR OF PUBLIC WORKS/CITY ENGINEER.
4. HOURS OF OPERATION SHALL BE FROM 6:00 AM TO 7:00 PM, MONDAY THROUGH FRIDAY. ROAD/LANE CLOSURES SHALL BE LIMITED TO THE HOURS OF 8:30 AM TO 3:30 PM WEEKDAYS UNLESS OTHERWISE APPROVED BY THE TRANSPORTATION MANAGER. OTHER HOURS SHALL REQUIRE WRITTEN AUTHORIZATION FROM THE DIRECTOR OF PUBLIC WORKS/CITY ENGINEER OR CITY BUILDING OFFICIAL.
5. INSPECTION SHALL BE CALLED FOR THROUGH THE CITY AT (909) 627-7577, 48 HOURS PRIOR TO STARTING WORK.
6. PRIOR TO CONSTRUCTION WORK, ALL CONTRACTORS, INCLUDING SUBCONTRACTORS, SHALL OBTAIN A CITY BUSINESS LICENSE AND AN ENCROACHMENT PERMIT.
7. STATE LAW SB 3019 REQUIRES THE CONTRACTOR TO OBTAIN AN IDENTIFICATION NUMBER FROM UNDERGROUND SERVICE ALERT PRIOR TO THE ISSUANCE OF A CITY ENCROACHMENT PERMIT. THE CONTRACTOR SHALL NOTIFY UNDERGROUND SERVICE ALERT TWO FULL WORKING DAYS (48 HOURS MINIMUM) IN ADVANCE OF ANY CONSTRUCTION ACTIVITIES, INCLUDING PAVEMENT REMOVAL, EXCAVATION AND AC OVERLAY, WHICH COULD AFFECT ANY UNDERGROUND UTILITY.
8. ANY CONTRACTOR PERFORMING WORK ON THIS PROJECT SHALL FAMILIARIZE HIMSELF WITH THE SITE AND SHALL BE RESPONSIBLE FOR ANY DAMAGE TO EXISTING FACILITIES RESULTING DIRECTLY OR INDIRECTLY FROM HIS OPERATIONS, WHETHER OR NOT SUCH FACILITIES ARE SHOWN ON THE PLANS.
9. PRIOR TO ANY CONSTRUCTION WORK WHICH COULD DAMAGE OR CONFLICT WITH UNDERGROUND STRUCTURES OR UTILITIES, THE CONTRACTOR SHALL EXCAVATE INSPECTION HOLES TO DETERMINE THE LOCATION AND DEPTH OF SAID STRUCTURES AND UTILITIES IN THE VICINITY OF, OR WHICH MAY BE AFFECTED BY, THE PROPOSED IMPROVEMENT WORK.
10. IF EXISTING UTILITIES OR OTHER FACILITIES CONFLICT WITH THE PROPOSED IMPROVEMENTS, WORK SHALL STOP AND THE ENGINEER SHALL BE NOTIFIED IMMEDIATELY.
11. THE CONTRACTOR SHALL REPAIR OR REPLACE ANY DAMAGED OR ALTERED EXISTING IMPROVEMENTS WITHIN THE PUBLIC RIGHT-OF-WAY AS DIRECTED BY THE DIRECTOR OF PUBLIC WORKS/CITY ENGINEER IN THE FIELD.
12. THE CONTRACTOR SHALL MAINTAIN DUST CONTROL AT ALL TIMES.
13. PRIOR TO TAKING WATER FROM A FIRE HYDRANT, THE CONTRACTOR SHALL MAKE ARRANGEMENTS TO OBTAIN A CITY HYDRANT WATER METER.
14. SURVEY MONUMENTS SHALL BE PROTECTED AND PERPETUATED IN PLACE. DISTURBED OR COVERED MONUMENTS SHALL BE RESET BY A REGISTERED CIVIL ENGINEER OR A LICENSED LAND SURVEYOR.
15. IRRIGATION LINES SHALL BE REMOVED, RELOCATED OR RECONSTRUCTED AS SHOWN OR AS DIRECTED BY THE DIRECTOR OF PUBLIC WORKS/CITY ENGINEER IN THE FIELD.
16. NEW AND EXISTING MANHOLES AND VALVE CANS SHALL BE ADJUSTED TO GRADE.
17. UTILITIES SHALL BE INSTALLED, TESTED, AND APPROVED PRIOR TO STREET PAVING, THE CONTRACTOR SHALL CONTACT THE APPROPRIATE CABLE TV COMPANY AND VERIFY CABLE TV CONDUIT IS IN PLACE BEFORE PAVING.
18. SPLICING OF STREET LIGHT CONDUCTORS SHALL BE PERMITTED ONLY IN PULL BOXES.
19. THE CONTRACTOR SHALL UNDERGROUND ALL UTILITY LINES ADJOINING AND INTERIOR TO THE PROJECT, INCLUDING POWER LINES OF 34.5KV OR LESS, IN ACCORDANCE WITH CHAPTER 13.32 OF THE CITY CODE.
20. CARE SHALL BE TAKEN TO PREVENT GRADED DITCHES AND SWALES FROM UNDERMINING STREET IMPROVEMENTS. UPON INSPECTION, THE ENGINEER MAY REQUIRE TEMPORARY GUNITE SWALES.
21. TRENCH BACKFILL SHALL BE DONE IN ACCORDANCE WITH CITY STANDARD DRAWING 109.
22. THE THICKNESS OF BASE MATERIAL SHALL BE DETERMINED BY SOIL TESTS AND RECOMMENDATIONS FROM A SOILS ENGINEER. UPON COMPLETION OF ROUGH GRADING, R-VALUES, AND SAND EQUIVALENTS, THE STRUCTURAL SECTIONS OF STREETS SHALL BE SUBMITTED TO THE ENGINEER FOR APPROVAL AND THEY MUST AT LEAST HAVE THE MINIMUM SECTION THICKNESS PER CITY STANDARD 100.
23. THE CONTRACTOR SHALL NOT ORDER OR PLACE ANY CONCRETE OR ASPHALT CONCRETE PAVING UNTIL THE FORMS AND SUBGRADE OR AGGREGATE BASE HAVE BEEN INSPECTED AND APPROVED BY THE ENGINEER IN THE FIELD.
24. THE CONTRACTOR SHALL REMOVE AND REPLACE, IN KIND, A MINIMUM OF 2 FEET OF EXISTING ASPHALT CONCRETE AND AGGREGATE BASE ADJACENT TO NEWLY CONSTRUCTED CURB AND GUTTER.
25. THE FINAL OR SURFACE LAYER OF ASPHALT CONCRETE SHALL NOT BE PLACED UNTIL ALL ON-SITE IMPROVEMENTS, INCLUDING GRADING HAVE BEEN COMPLETED AND ALL UNACCEPTABLE WORK HAS BEEN CORRECTED UNLESS OTHERWISE APPROVED BY THE DIRECTOR OF PUBLIC WORKS/CITY ENGINEER.
26. THE CONTRACTOR SHALL REMOVE AND INSTALL PAVEMENT MARKINGS AND STRIPING AS REQUIRED BY THE ENGINEER IN THE FIELD. THIS REQUIREMENT SHALL INCLUDE THE PAVEMENT MARKERS DESCRIBED IN THE HYDRANT SPECIFICATIONS.
27. PERMANENT TRAFFIC CONTROL SIGNS AND DEVICES SHALL BE LOCATED AS SPECIFIED BY THE CITY TRAFFIC ENGINEER PRIOR TO FINAL APPROVAL OF IMPROVEMENTS.
28. STREET NAME SIGNS AND STOP SIGNS SHALL BE FURNISHED BY THE CONTRACTOR IN ACCORDANCE WITH CITY STANDARD DRAWING 800 AND 805.
29. "AS-BUILT" RECORD DRAWINGS SHALL BE FURNISHED TO THE CITY UPON COMPLETION OF CONSTRUCTION.
30. APPROVAL OF THESE PLANS BY THE CITY OF ITS AGENTS SHALL NOT RELIEVE THE CONTRACTOR OR THE APPLICANT FROM THE RESPONSIBILITY FOR THE CORRECTION OF ERRORS OR OMISSIONS DISCOVERED DURING CONSTRUCTION. UPON REQUEST, THE APPROPRIATE REVISIONS SHALL BE SUBMITTED TO THE ENGINEER FOR REVIEW AND APPROVAL.

STORM DRAIN GENERAL NOTES

1. PRIOR TO ANY CONSTRUCTION WORK WHICH COULD DAMAGE OR CONFLICT WITH UNDERGROUND STRUCTURES OR UTILITIES, THE CONTRACTOR SHALL EXCAVATE INSPECTION HOLES TO DETERMINE THE LOCATION AND DEPTH OF SAID STRUCTURES AND UTILITIES IN THE VICINITY OF, OR WHICH MAY BE AFFECTED BY THE PROPOSED IMPROVEMENT WORK.
2. PRIOR TO TAKING WATER FROM A HYDRANT, THE CONTRACTOR SHALL MAKE ARRANGEMENTS TO OBTAIN A CITY, HYDRANT, WATER METER.
3. SURVEY MONUMENTS SHALL BE PROTECTED AND PERPETUATED IN PLACE. DISTURBED OR COVERED MONUMENTS SHALL BE RESET BY A REGISTERED CIVIL ENGINEER OR A LICENSED LAND SURVEYOR.
4. IRRIGATION LINES SHALL BE REMOVED, RELOCATED OR RECONSTRUCTED AS SHOWN OR AS DIRECTED BY THE ENGINEER IN THE FIELD.
5. NEW AND EXISTING MANHOLES AND VALVE CANS SHALL BE ADJUSTED TO GRADE.
6. IF EXISTING UTILITIES OR OTHER FACILITIES CONFLICT WITH THE PROPOSED IMPROVEMENTS, WORK SHALL STOP AND THE ENGINEER SHALL NOTIFY IMMEDIATELY.
7. THE CONTRACTOR SHALL REPAIR OR REPLACE ANY DAMAGED OR ALTERED EXISTING IMPROVEMENTS WITHIN THE PUBLIC RIGHT-OF-WAY AS DIRECTED BY THE ENGINEER IN THE FIELD.
8. THE CONTRACTOR SHALL MAINTAIN DUST CONTROL AT ALL TIMES.
9. ALL CONSTRUCTION DEBRIS INCLUDING DUST, DIRT, AND ANY OTHER TYPE OF SCRAP MUST BE DISPOSED THROUGH THE SOLID WASTE SYSTEM. IT IS STRICTLY PROHIBITED TO WASH ANY DUST, DIRT, SCRAP, OR OTHER MATERIAL TO THE STREET AND/OR STORM DRAIN SYSTEM.
10. CARE SHALL BE TAKEN TO PREVENT GRADES, DITCHES, AND SWALES FROM UNDERMINING STREET IMPROVEMENTS. UPON INSPECTION, THE ENGINEER MAY REQUIRE TEMPORARY GUNITE SWALES.
11. TRENCH BACKFILL SHALL BE DONE IN ACCORDANCE WITH L.A. COUNTY DEPARTMENT OF PUBLIC WORKS STD. DWG. 3080-2, CASE 3 BEDDING.
12. THE CONTRACTOR SHALL NOT ORDER OR PLACE ANY CONCRETE UNTIL FORMS AND REINFORCING STEEL HAVE BEEN INSPECTED AND APPROVED BY THE ENGINEER IN THE FIELD.
13. THE CONTRACTOR SHALL REMOVE AND INSTALL PAVEMENT MARKINGS AND STRIPING AS REQUIRED BY THE ENGINEER IN THE FIELD. THIS REQUIREMENT SHALL INCLUDE THE PAVEMENT MARKERS DESCRIBED IN THE HYDRANT SPECIFICATION.
14. "AS-BUILT" RECORD DRAWINGS SHALL BE FURNISHED TO THE CITY UPON COMPLETION OF CONSTRUCTION.
15. APPROVAL OF THESE PLANS BY THE CITY OR ITS AGENTS SHALL NOT RELIEVE THE CONTRACTOR OR THE APPLICANT FROM THE RESPONSIBILITY FOR THE CORRECTION OF ERRORS OR OMISSIONS DISCOVERED DURING CONSTRUCTION. UPON REQUEST, THE APPROPRIATE REVISIONS SHALL BE SUBMITTED TO THE ENGINEER FOR REVIEW AND APPROVAL.
16. THE "D" LOADS FOR THE R.C.P. WERE DETERMINED FROM THE L.A.C.D.P.W. "D" LOAD TABLES. THE PIPE BEDDING FOR THE R.C.P. SHALL BE PER L.A.C.D.P.W. STD. PLAN 3080-2 CASE 3.

LEGEND

- EXISTING EDGE OF PAVEMENT
- PROPOSED EDGE OF PAVEMENT
- EXISTING RIGHT OF WAY
- PROPOSED RIGHT OF WAY
- E — EXISTING EDISON LINE
- G — EXISTING GAS LINE
- T — EXISTING TELEPHONE LINE
- SD — EXISTING STORM DRAIN
- W — EXISTING WATER LINE
- RW — EXISTING RECLAIMED WATER LINE
- S — EXISTING SEWER LINE
- ℄ — CENTER LINE
- PROPOSED NEIGHBORHOOD EDGE
- PROPOSED STORM DRAIN
- W — PROPOSED/FUTURE WATER LINE
- PROPOSED STORM DRAIN MANHOLE

STORM DRAIN CONSTRUCTION NOTES

		ESTIMATED QUANTITIES
(1)	CONSTRUCT PRECAST 12'W X 4'H TRIPLE RCB PER CALTRANS STD. PLAN NO. D81 (USE 12'WX6'H STEEL SCHEDULE), EXCAVATION AND BACKFILL PER CALTRANS STD. PLAN NO. A62E	329 LF
(2)	CONSTRUCT JUNCTION STRUTURE, PIPE TO RCB, PER SPPWC STD. 333-1 AND DETAIL SHEET 10	2 EA
(3)	CONSTRUCT PIPE CULVERT WARPED WINGWALL, PER CALTRANS STD. PLAN NO. D86B AND DETAIL SHEET 5	1 EA
(4)	CONSTRUCT BOX CULVERT WARPED WINGWALL, PER CALTRANS STD. PLAN NO. D86A & DETAIL SHEET 6	1 LF
(5)	CONSTRUCT JUNCTION STRUCTURE NO. 2, PER CITY OF CHINO STD. DWG. 370A	3 EA
(6)	CONSTRUCT JUNCTION STRUCTURE NO. 3, PER CITY OF CHINO STD. DWG. 375A	3 EA
(7)	CONSTRUCT 84" RCP, CASE 3 BEDDING & BACKFILL PER L.A.C.D.P.W. STD. DWG. 3080-2, AND DETAIL SHEET 4	683 LF
(8)	CONSTRUCT 36" RCP, CASE 3 BEDDING & BACKFILL PER L.A.C.D.P.W. STD. DWG. 3080-2 AND DETAIL SHEET 4	91 LF
(9)	CONSTRUCT 24" RCP, CASE 3 BEDDING & BACKFILL PER L.A.C.D.P.W. STD. DWG. 3080-2 AND ETAIL SHEET 4	171 LF
(10)	CONSTRUCT END PIPE BRICK & MORTAR PER DETAIL SHEET 4	1 EA
(11)	CONSTRUCT CSP RISER, SIZE PER PLAN, PER CITY OF CHINO STD. 355	2 EA
(12)	CONSTRUCT 1/4 TON GROUTED RIP-RAP PER DETAIL SHEET 8	12,100 SF
(13)	CONSTRUCT 6' CHAINLINK FENCE PER SPPWC STD. DWG. 600-3	221 LF
(14)	CONSTRUCT CONCRETE BLANKET PROTECTION OVER EXISTING PIPE PER APWA STD. DWG. 225-2	1 EA
(15)	CONSTRUCT 36"X36" CATCH BASIN WITH PARKWAY GRATE PER BROOK PRODUCTS OR APPROVED EQUAL	1 EA
(16)	CONSTRUCT 15' WIDE SERVICE ROAD PER DETAIL SHEET 8	1,298 LF
(17)	CONSTRUCT CONCRETE APRON AROUND CSP RISER PER DETAIL SHEET 8	1 EA
[1]	POTHOLE EXISTING UTILITY AND NOTIFY ENGINEER IF THERE IS ANY DISCREPANCY PRIOR TO CONSTRUCTION	LS
[2]	RELOCATE EXISTING UTILITY BY OTHERS.	LS

STREET CONSTRUCTION NOTES

(20)	CONSTRUCT MINIMUM 7" AC OVER 8" CAB (SEE GENERAL NOTE 22)	45,400	S.F.
(21)	GRIND AND OVERLAY AC PAVEMENT PER DETAIL ON SHEET 2	310	S.F.
(22)	ADJUST SEWER MANHOLE TO GRADE PER CITY STD. DWG. NO. 535	9	EA.
(23)	ADJUST STORM DRAIN MANHOLE TO GRADE PER CITY STD. DWG. NO. 535	5	EA.
(24)	ADJUST WATER VALVE TO GRADE PER CITY STD. DWG. NO. 455	1	EA.
(25)	INSTALL BARRIER POST (PERMANENT) PER CITY STD. DWG. NO. 860	6	EA.
(26)	INSTALL 5'x7' LIGHT CLASS ROCK RIP-RAP PAD	3	EA.
(27)	ADJUST TRAFFIC SIGNAL BOX TO GRADE	1	S.F.
(P)	PROTECT IN PLACE	LUMP SUM	

DISPOSITION NOTES

- (A) REMOVE AC PAVEMENT
- (B) RELOCATE POWER POLE BY SCE
- (C) RELOCATE WIRE GUY BY SCE
- (D) REMOVE STORM DRAIN STRUCTURE
- (E) REMOVE ROCK RIP RAP
- (F) REMOVE TEMPORARY CONCRETE BARRIERS AND DELINEATORS
- (G) RELOCATE SIGN
- (H) REMOVE TEMPORARY CRASH CUSHION MODULES
- (I) REMOVE/RELOCATE FENCE
- (J) RELOCATE AIR VAC. AND GUARD POSTS PER CITY STD. DWG. NO. 435
- (K) REMOVE AC BERM
- (L) RELOCATE MAIL BOX
- (M) RELOCATE BOULDERS
- (N) RELOCATE WATER VALVE PER CITY STD. DWG. NO. 450

ABBREVIATIONS

AC – ASPHALT CONCRETE
ANG. – ANGLE
AVE. – AVENUE
BEG. – BEGIN
CB – CATCH BASIN
C/L – CENTER LINE
CSP – CORRUGATED STEEL PIPE
DWG. – DRAWING
EP – EDGE OF PAVEMENT
EX. – EXISTING
FG – FINISHED GRADE
FL – FLOW LINE
FS – FINISHED SURFACE
HGL – HYDRAULIC GRADE LINE
INV. – INVERT
LAT. – LATERAL
MAX. – MAXIMUM
MH – MANHOLE
MIN. – MINIMUM
NO. – NUMBER
NTS – NOT TO SCALE
OC – ON CENTER
PROP. – PROPOSED
PT. – POINT
RCB – REINFORCED CONCRETE BOX
RCP – REINFORCED CONCRETE PIPE
SPPWC – STANDARD PLANS PUBLIC WORKS CONSTRUCTION
R/W – RIGHT OF WAY
SCE – SOUTHERN CALIFORNIA EASEMENT
SHT. – SHEET
ST. – STREET
STA. – STATION
STD. – STANDARD
TR – TRACT
TW – TOP OF WALL
W-WIDTH

3/7 — 3 = DETAIL NUMBER, 7 = SHEET NUMBER

PRELIMINARY
NOT FOR CONSTRUCTION

SEAL

REGISTERED PROFESSIONAL ENGINEER — CARLA E. BERARD — No. 45183 — Exp. 9/30/08 — CIVIL — STATE OF CALIFORNIA

Underground Service Alert — Call: TOLL FREE 1-800 227-2600 — TWO WORKING DAYS BEFORE YOU DIG

PREPARED BY		REVISIONS	MADE BY	MADE DATE	APPROVED BY	APPROVED DATE
FIRM:	L.D. KING, INC.	1				
ADDRESS:	2151 Convention Center Way, Ste. 100	2				
	Ontario, CA. 91764	3				
TELEPHONE:	(909)937-0200 FAX: (909)937-0202	4				
		5				
	SIGNATURE RCE 45183 DATE	6				

BENCH MARK DATA
NO. 157/71 ELEV. 595.256
LOCATION:
A 2 1/2" brass disk stamped "157/71" set in a traffic signal concrete base located at a northwest intersection of Euclid Avenue and Kimball Avenue

REFERENCE DRAWINGS

REVIEWED BY STAFF	BY	DATE	CITY ENGINEER'S STAFF	BY	DATE
WATER:			DRAWN:		
SEWER:					
FIRE:			DESIGNED:		
PLANNING:			CHECKED:		
TRAFFIC:					
SERVICES:			RECOMMENDED:		

APPROVED BY:
DIRECTOR OF PUBLIC WORKS/CITY ENGINEER
DATE: _____

CITY OF CHINO ENGINEERING DIVISION
PINE AVENUE IMPROVEMENTS PLAN
GENERAL NOTES, LEGENDS, & ABBREVIATIONS

PROJECT NO.
SHEET 2 OF 13
DRAWING NO.

JN 481178 LEWIS OPERATING CORP. E:\1400-499\481\0481-178\PLANS\StormStreet\481178-02notes.dwg, Plotted: Jan 31, 2013 - 10:04am

1/31/2013

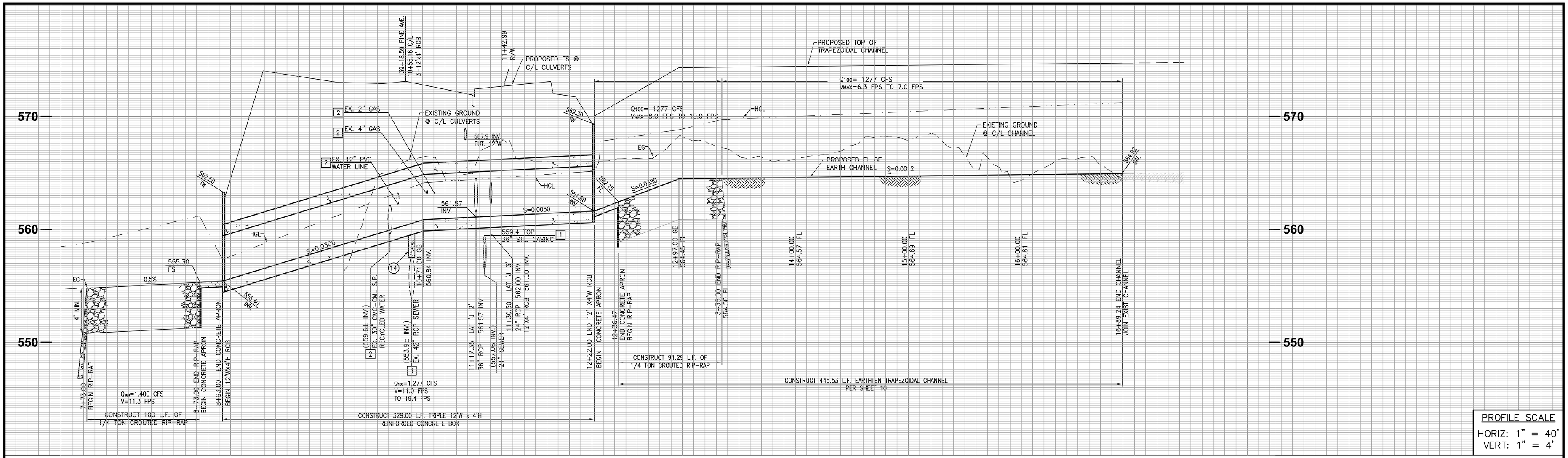

PROFILE SCALE
HORIZ: 1" = 40'
VERT: 1" = 4'

LINE 'J'

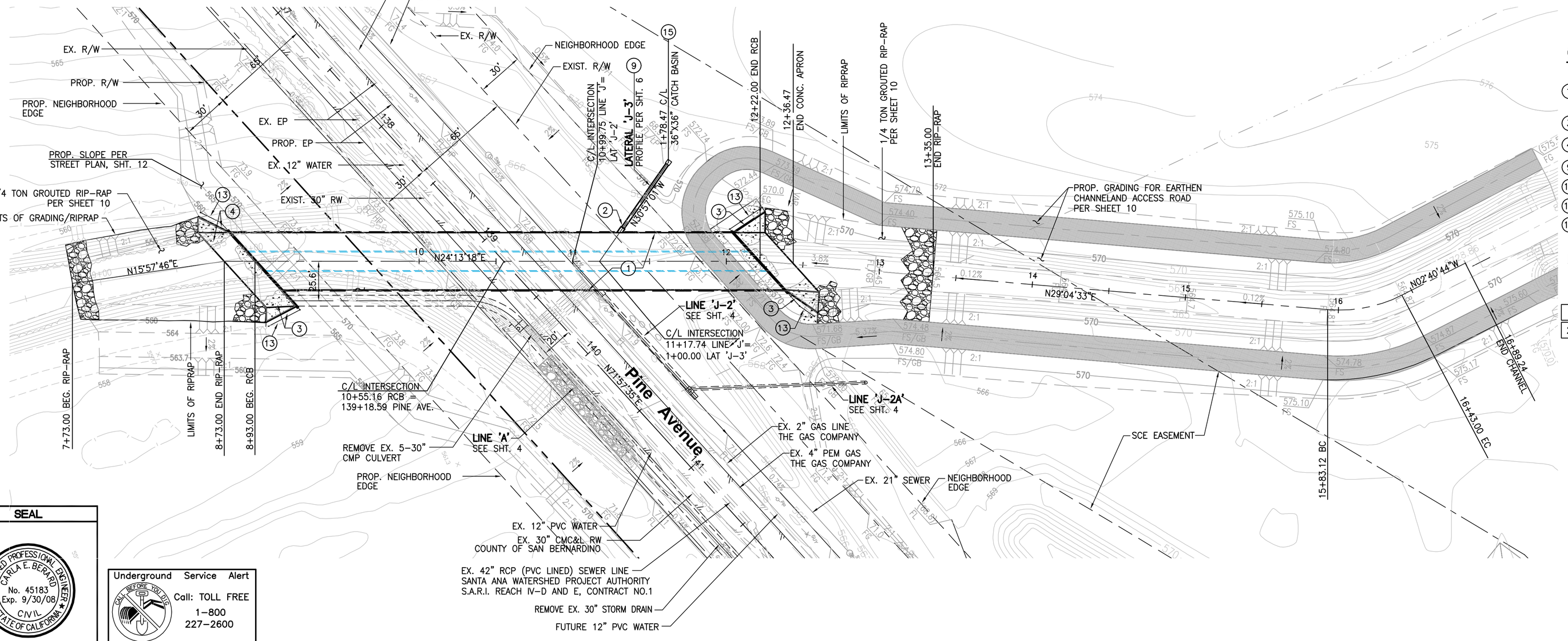

CONSTRUCTION NOTES

1. CONSTRUCT PRECAST 12'W X 4'H TRIPLE RCB PER CALTRANS STD. PLAN NO. D81 (USE 12'W X 6'H STEEL SCHEDULE) EXCAVATION AND BACKFILL PER CALTRANS STD. PLAN NO. A62E
3. CONSTRUCT PIPE CULVERT WARPED WINGWALL, PER CALTRANS STD. PLAN NO. D86B AND DETAIL SHEET 6
4. CONSTRUCT BOX CULVERT WARPED WINGWALL, PER CALTRANS STD. PLAN NO. D86A & DETAIL SHEET 6
9. CONSTRUCT 24" RCP, CASE 3 BEDDING & BACKFILL PER L.A.C.D.P.W. STD. DWG. 3080-2 & DETAIL SHEET 5
13. CONSTRUCT 6' CHAINLINK FENCE PER SPPWC STD. DWG. 600-3
14. CONSTRUCT CONCRETE BLANKET PROTECTION OVER EXISTING PIPE PER APWA STD. 225-2
15. CONSTRUCT 36"X36" CATCH BASIN WITH PARKWAY GRATE PER BROOK PRODUCTS OR APPROVED EQUAL AND DETAIL SHEET 5

NOTE: REMOVAL OF EXISTING STRUCTURE PER STREET PLANS

1. POTHOLE EXISTING UTILITY AND NOTIFY ENGINEER IF THERE IS ANY DISCREPANCY PRIOR TO CONSTRUCTION
2. RELOCATE EXISTING UTILITY BY OTHERS.

GRAPHIC SCALE
40 0 20 40 80 160
(IN FEET)
1 inch = 40 ft.

SEAL

REGISTERED PROFESSIONAL ENGINEER — CARLA E. BERARD — No. 45183 Exp. 9/30/08 — CIVIL — STATE OF CALIFORNIA

Underground Service Alert — DIG ALERT — Call: TOLL FREE 1-800 227-2600 — TWO WORKING DAYS BEFORE YOU DIG

PREPARED BY	REVISIONS	MADE BY	MADE DATE	APPROVED BY	APPROVED DATE
FIRM: L.D. KING, INC.	1				
ADDRESS: 2151 Convention Center Way, Ste. 100 Ontario, CA. 91764	2				
TELEPHONE: (909)937-0200 FAX: (909)937-0202	3				
	4				
SIGNATURE RCE 45183 DATE	5				

BENCH MARK DATA
NO. 157/71 ELEV. 595.256
LOCATION:
A 2 1/2" brass disk stamped "157/71" set in a traffic signal concrete base located at a northwest intersection of Euclid Avenue and Kimball Avenue

REFERENCE DRAWINGS

REVIEWED BY STAFF	BY	DATE
WATER:		
SEWER:		
FIRE:		
PLANNING:		
TRAFFIC:		
SERVICES:		

CITY ENGINEER'S STAFF	BY	DATE
DRAWN:		
DESIGNED:		
CHECKED:		
RECOMMENDED:		

APPROVED BY:
DIRECTOR OF PUBLIC WORKS/CITY ENGINEER
DATE: _____

CITY OF CHINO ENGINEERING DIVISION
STORM DRAIN IMPROVEMENTS PLAN
LINE 'J' PLAN & PROFILE

PROJECT NO.
SHEET 3 OF 13
DRAWING NO.

JN 4811-7R
F:\400-499\481\0481-17R\PLANS\StormStreet\4811-7R-01SD.dwn Plotted: Jan 31, 2013 - 10:07am
LEWIS OPERATING CORP

1/31/2013

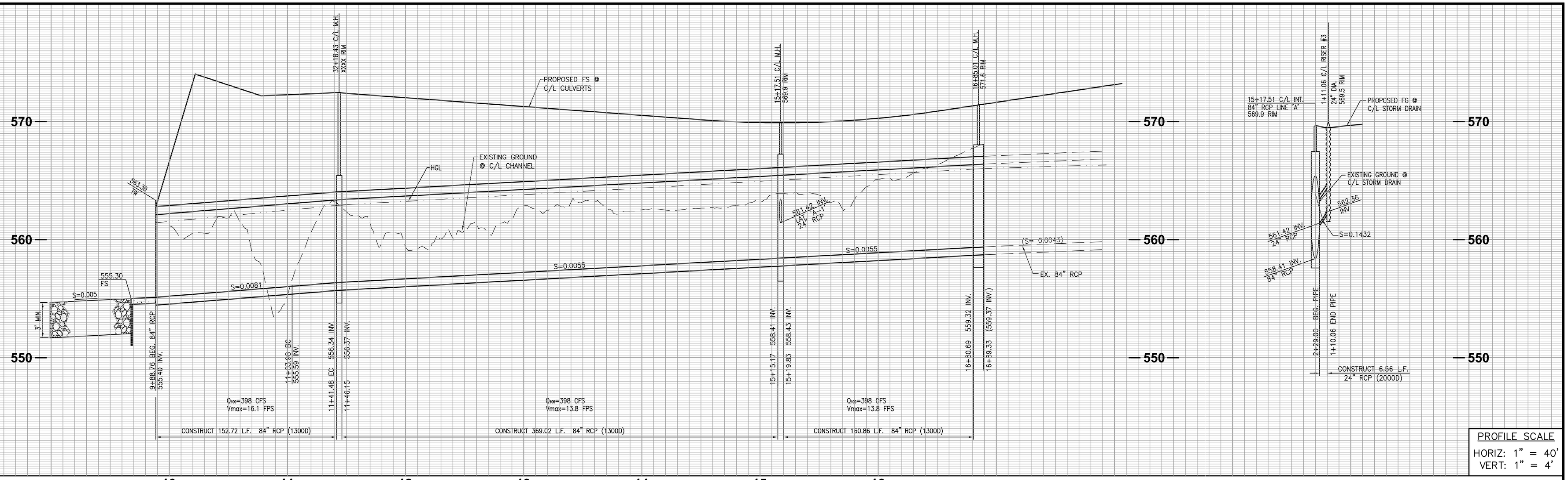

PROFILE SCALE
HORIZ: 1" = 40'
VERT: 1" = 4'

LINE 'A'

LAT. A-1

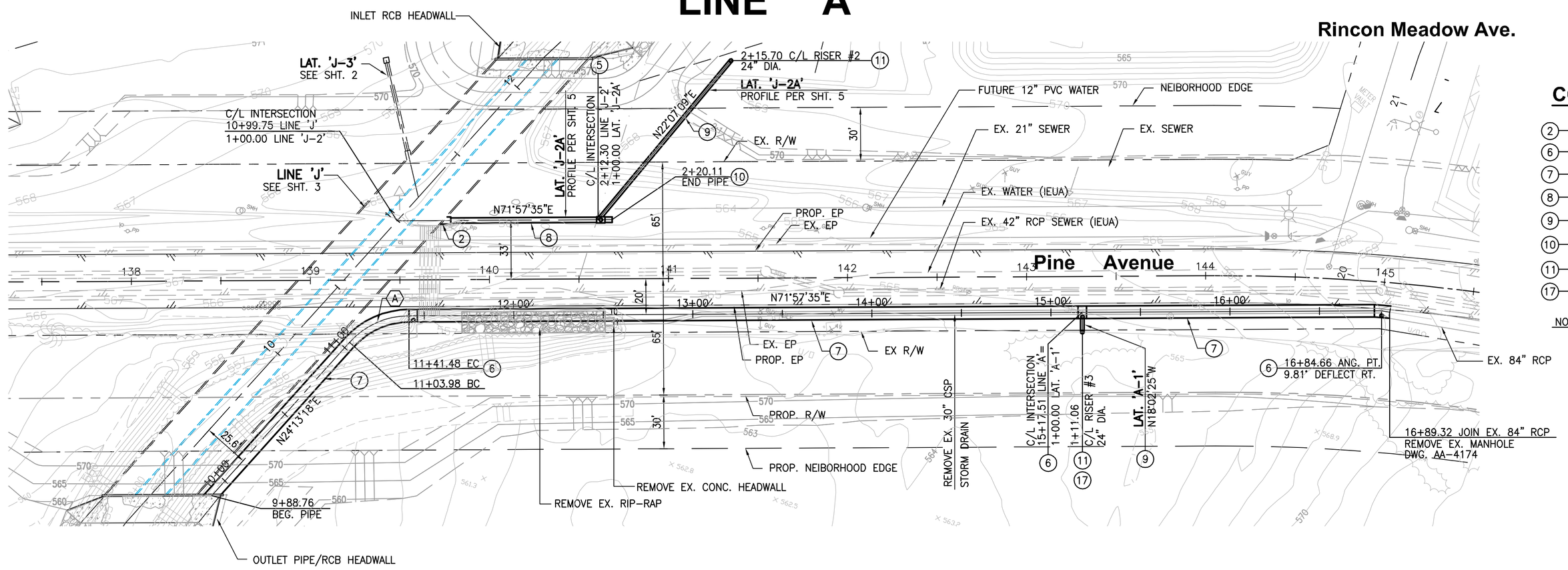

CONSTRUCTION NOTES

(2) CONSTRUCT JUNCTION STRUCTURE, PIPE TO RCB, PER SPPWC STD. 333-1 AND DETAIL SHEET 9
(6) CONSTRUCT JUNCTION STRUCTURE NO. 3, PER CITY OF CHINO STD. DWG. 375A
(7) CONSTRUCT 84" RCP, CASE 3 BEDDING & BACKFILL PER L.A.C.D.P.W. STD. DWG. 3080-2 AND DETAIL SHEET 5
(8) CONSTRUCT 36" RCP, CASE 3 BEDDING & BACKFILL PER L.A.C.D.P.W. STD. DWG. 3080-2 AND DETAIL SHEET 5
(9) CONSTRUCT 24" RCP, CASE 3 BEDDING & BACKFILL PER L.A.C.D.P.W. STD. DWG. 3080-2 AND DETAIL SHEET 5
(10) CONSTRUCT END PIPE BRICK & MORTAR PER DETAIL SHEET 5
(11) CONSTRUCT CSP RISER, SIZE PER PLAN, PER CITY OF CHINO STD. 355
(17) CONSTRUCT CONCRETE APRON AROUND CSP RISER PER DETAIL SHEET 9

NOTE: REMOVAL OF EXISTING STRUCTURE PER STREET PLANS

CURVE DATA

	R	Δ	L	T
A	45.00'	47°44'17"	37.49'	19.91'

GRAPHIC SCALE
40 0 20 40 80 160
(IN FEET)
1 inch = 40 ft.

SEAL

REGISTERED PROFESSIONAL ENGINEER CARLA E. BERARD No. 45183 Exp. 9/30/08 CIVIL STATE OF CALIFORNIA

Underground Service Alert
DIG BEFORE YOU DIG
Call: TOLL FREE 1-800 227-2600
TWO WORKING DAYS BEFORE YOU DIG

PREPARED BY		REVISIONS	MADE BY	MADE DATE	APPROVED BY	APPROVED DATE
FIRM:	L.D. KING, INC.	1				
ADDRESS:	2151 Convention Center Way, Ste. 100	2				
	Ontario, CA. 91764	3				
TELEPHONE:	(909)937-0200 FAX: (909)937-0202	4				
		5				
	SIGNATURE RCE 45183 DATE	6				

BENCH MARK DATA
NO. 157/71 ELEV. 595.256
LOCATION:
A 2 1/2" brass disk stamped "157/71" set in a traffic signal concrete base located at a northwest intersection of Euclid Avenue and Kimball Avenue

REFERENCE DRAWINGS

REVIEWED BY STAFF	BY	DATE
WATER:		
SEWER:		
FIRE:		
PLANNING:		
TRAFFIC:		
SERVICES:		

CITY ENGINEER'S STAFF	BY	DATE
DRAWN:		
DESIGNED:		
CHECKED:		
RECOMMENDED:		

APPROVED BY:
DIRECTOR OF PUBLIC WORKS/CITY ENGINEER
DATE: _____

CITY OF CHINO ENGINEERING DIVISION
STORM DRAIN IMPROVEMENTS PLAN
LINE 'A' PLAN & PROFILE

PROJECT NO.
SHEET 4 OF 13
DRAWING NO.

1/31/2013

F:\401-499\481\0481-17R\PLANS\StormStreet\48117R-04SD.dwn Plotted: Jan 31, 2013 - 10:08am
I FWIS OPERATING CORP
JN 481117R

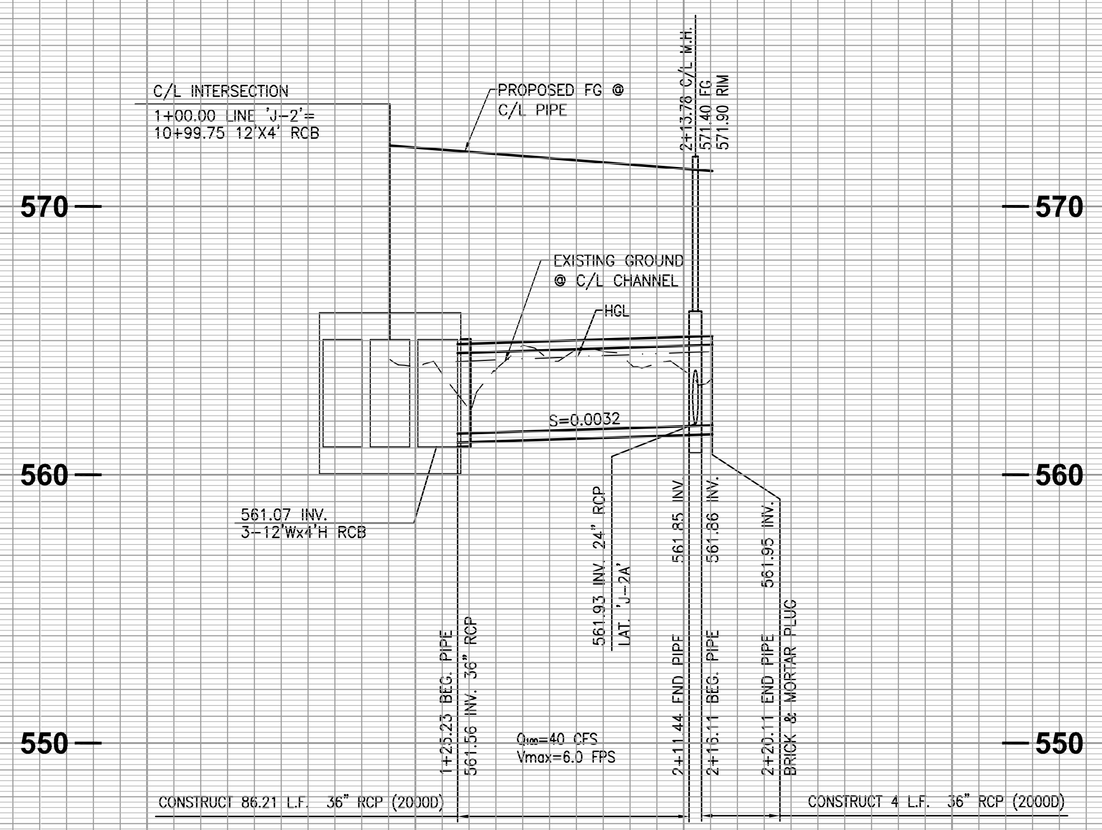

1 2

LATERAL 'J-2'
(PLAN PER SHEET 4)

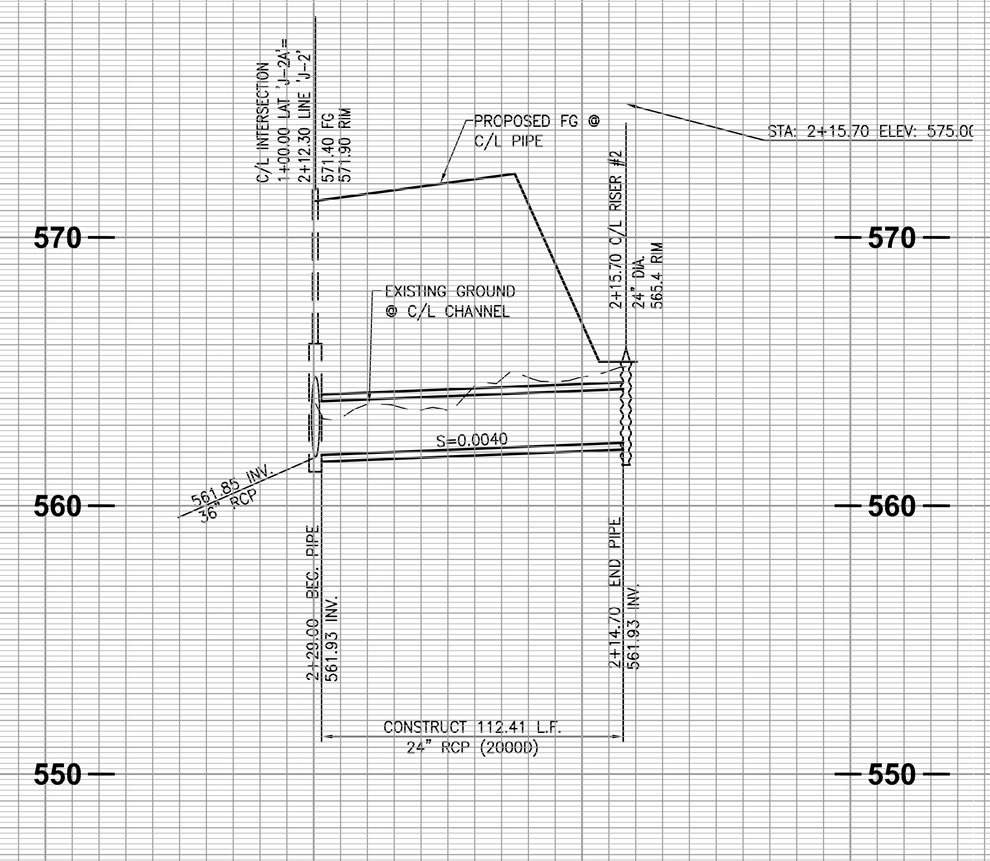

1 2

LATERAL 'J-2A'
(PLAN PER SHEET 4)

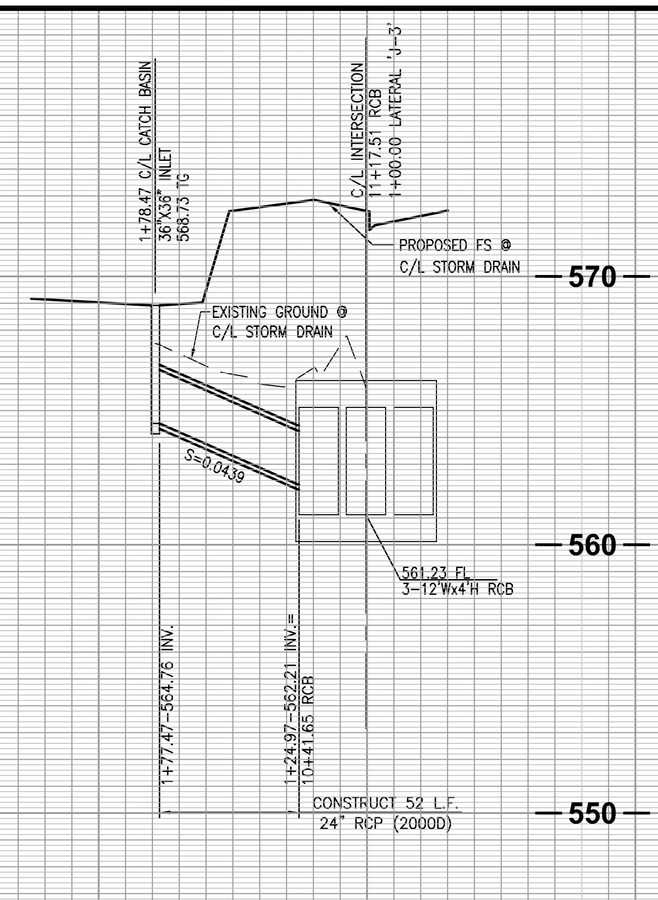

2 1

LATERAL 'J-3'
(PLAN PER SHEET 3)

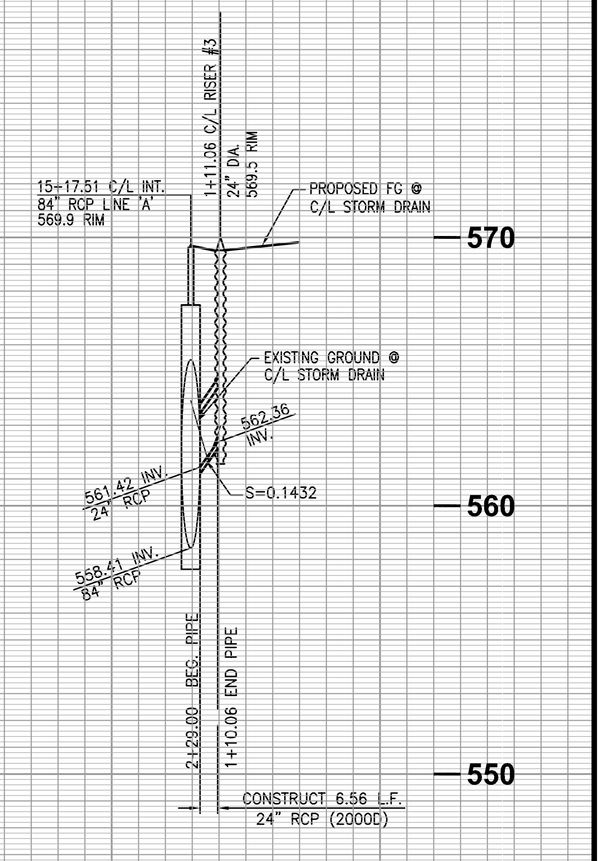

LATERAL 'A-1'
(PLAN PER SHEET 4)

PROFILE SCALE
HORIZ: 1" = 40'
VERT: 1" = 4'

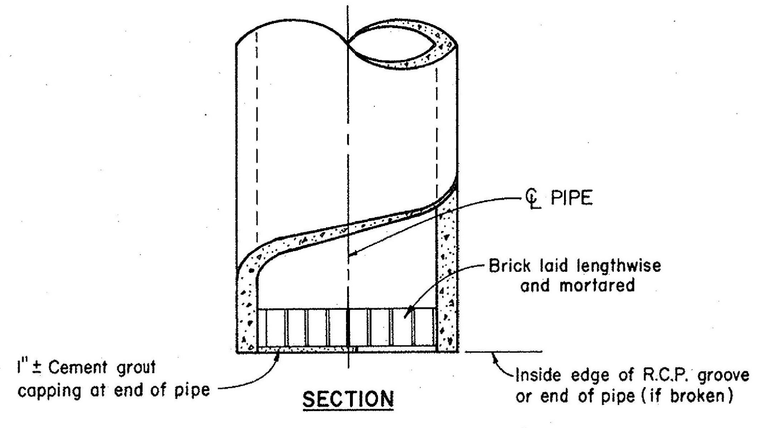

SECTION

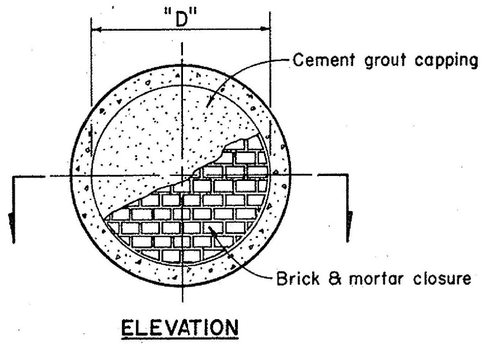

ELEVATION

PIPE END CLOSURE DETAIL 10

NOT TO SCALE

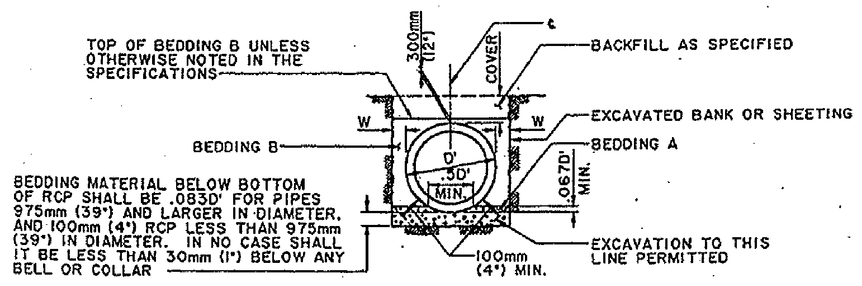

CASE 3
REINFORCED CONCRETE PIPE

NOTES:

CASE 3 BEDDING & BACKFILL AROUND RCP (LOAD FACTOR 1.8)

(a) W AT SPRING LINE SHALL NOT BE LESS THAN THE FOLLOWING: 150mm (6") FOR RCP 1500mm (60") OR LESS IN DIAMETER, 250mm (10") FOR RCP 1575mm (63") TO 2700mm (108") INCLUSIVE IN DIAMETER, AND 300mm (12") FOR PIPE LARGER THAN 2700mm (108") IN DIAMETER. THESE DIMENSIONS MAY INCLUDE THE THICKNESS OF ANY SHEETING.
(b) WHERE COVER IS 3m (10'-0") OR LESS, W MEASURED AT THE TOP OF THE RCP MAY BE ANY DIMENSION GREATER THAN THE ABOVE SPECIFIED MINIMUM, UNLESS OTHERWISE SPECIFIED ON THE PROJECT DRAWINGS.
(c) WHERE COVER IS GREATER THAN 3m (10'-0"), W MEASURED AT TOP OF PIPE SHALL NOT BE GREATER THAN 250mm (10") FOR RCP 2700mm (108") IN DIAMETER OR LESS, OR 300mm (12") FOR RCP OVER 2700mm (108") IN DIAMETER UNLESS THE CONTRACTOR AT HIS OWN EXPENSE PROVIDES CASE 1 BEDDING OR STRONGER RCP. THESE DIMENSIONS INCLUDE THE THICKNESS OF ANY SHEETING.
(d) SCREED BEDDING A TO FIT CURVATURE AND GRADE OF RCP. TYPE OF SCREED AND THE METHOD OF USE TO BE APPROVED BY THE ENGINEER.

PIPE BEDDING DETAIL

NOT TO SCALE

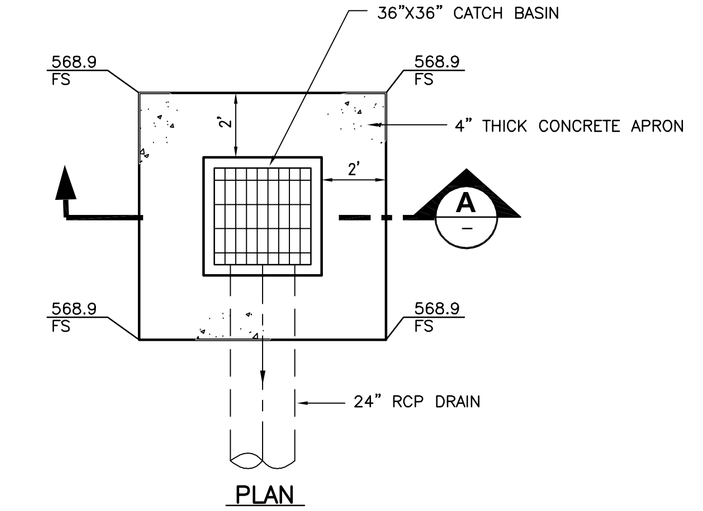

PLAN

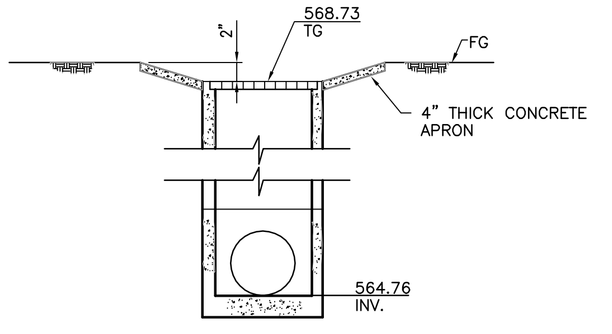

SECTION A

36" X 36" CATCH BASIN DETAIL 15

NOT TO SCALE

GRAPHIC SCALE
40 0 20 40 80 160
(IN FEET)
1 inch = 40 ft.

SEAL

REGISTERED PROFESSIONAL ENGINEER CARLA E. BERARD No. 45183 Exp. 9/30/08 CIVIL STATE OF CALIFORNIA

Underground Service Alert
DIG ALERT
Call: TOLL FREE
1-800
227-2600
TWO WORKING DAYS BEFORE YOU DIG

PREPARED BY	REVISIONS	MADE BY	MADE DATE	APPROVED BY	APPROVED DATE	BENCH MARK DATA	REFERENCE DRAWINGS	REVIEWED BY STAFF	BY	DATE	CITY ENGINEER'S STAFF	BY	DATE	APPROVED BY:
FIRM: L.D. KING, INC.						NO. 157/71 ELEV. 595.256		WATER:			DRAWN:			
ADDRESS: 2151 Convention Center Way, Ste. 100						LOCATION:		SEWER:			DESIGNED:			
Ontario, CA. 91764						A 2 1/2" brass disk stamped "157/71" set in a traffic signal concrete base located at a northwest intersection of Euclid Avenue and Kimball Avenue		FIRE:			CHECKED:			DIRECTOR OF PUBLIC WORKS/CITY ENGINEER
TELEPHONE: (909)937-0200 FAX: (909)937-0202								PLANNING:			RECOMMENDED:			DATE:
SIGNATURE RCE 45183 DATE								TRAFFIC:						
								SERVICES:						

CITY OF CHINO ENGINEERING DIVISION

STORM DRAIN IMPROVEMENTS PLAN

LATERALS 'J-2', 'J2-A', 'J-3', 'A-1' & DRAINAGE DETAILS

PROJECT NO.

SHEET 5 OF 13

DRAWING NO.

JN 4R1178

I:FWS OPERATING CORP

F:\400-499\4R1\04R1-178\PLANS\StormStreet\4R1178-D50.dwg, Plotted: Jan 31, 2013 - 10:09am

1/31/2013

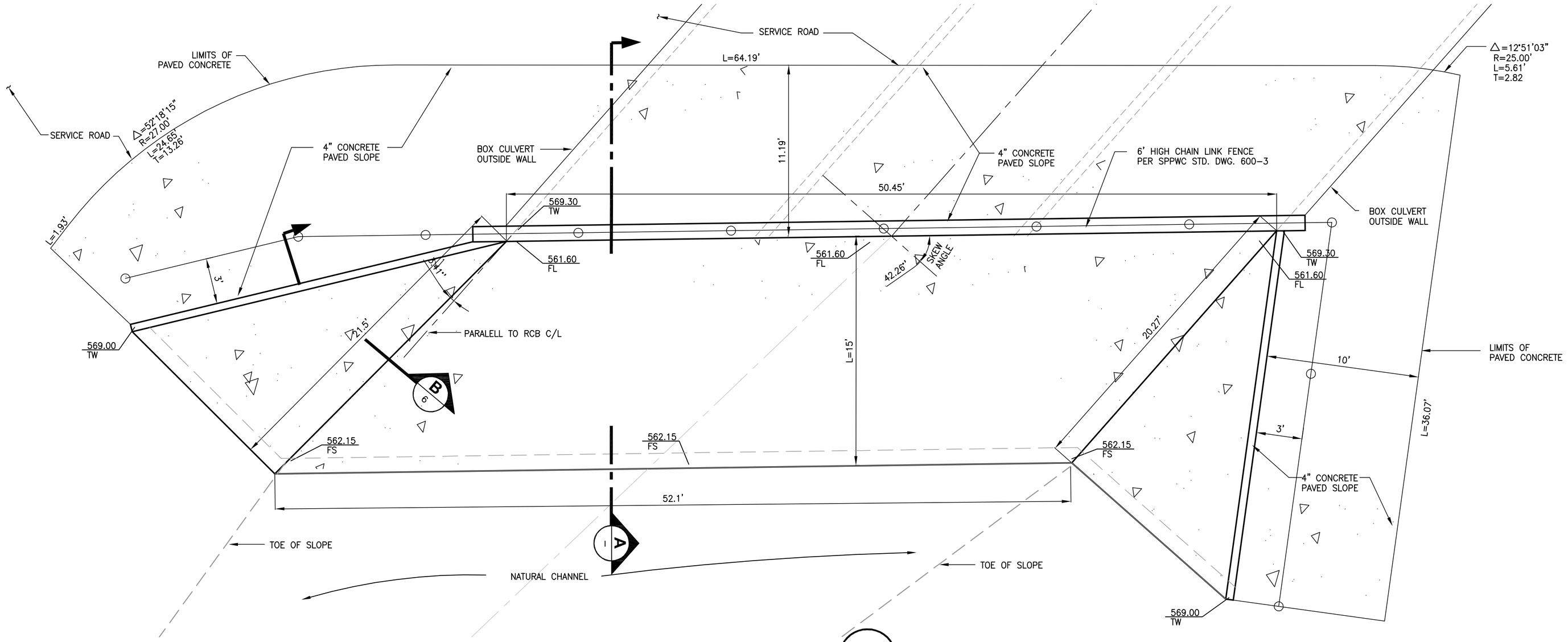

WARPED WINGWALL & CONCRETE APRON AT INLET

SCALE 1"=4'

3

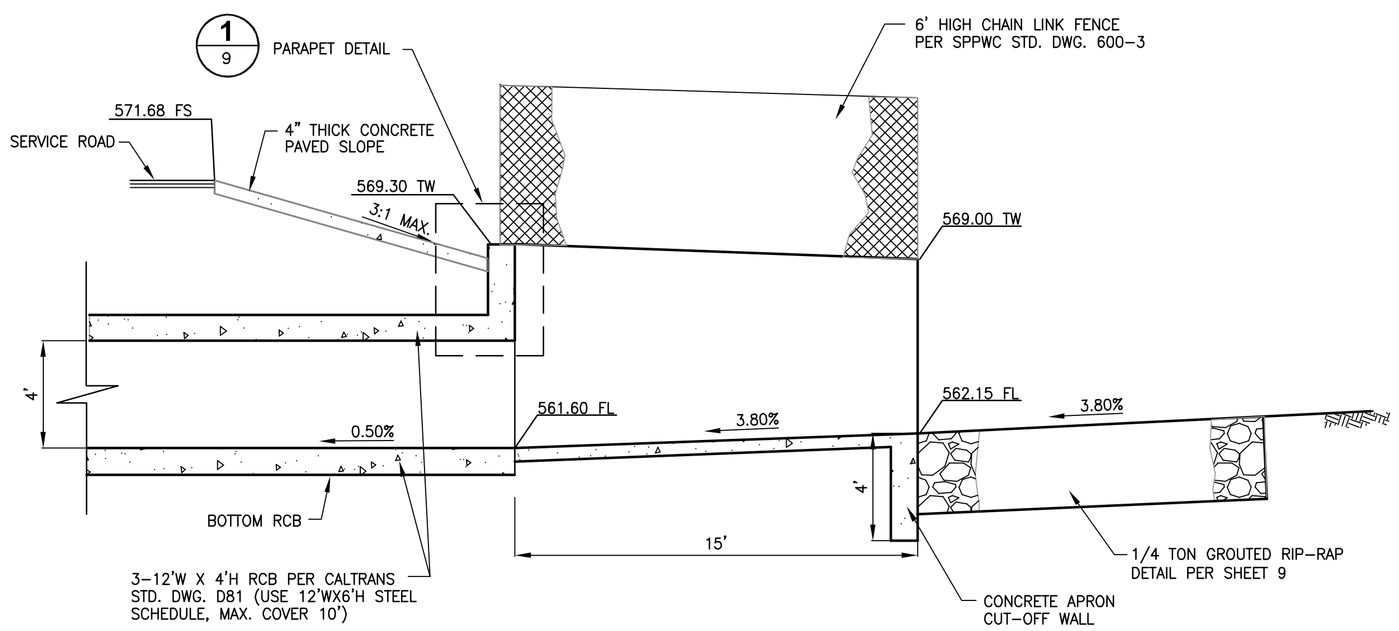

SECTION A

SCALE 1"=4'

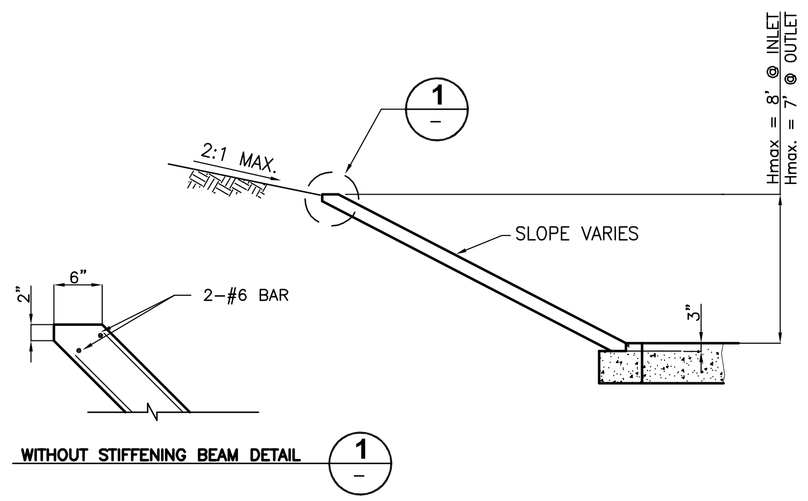

WITHOUT STIFFENING BEAM DETAIL 1/–

B/6,7 SECTION

SCALE: 1"=4'

SEAL

REGISTERED PROFESSIONAL ENGINEER CARLA E. BERARD No. 45183 Exp. 9/30/08 CIVIL STATE OF CALIFORNIA

Underground Service Alert
Call: TOLL FREE 1-800 227-2600
TWO WORKING DAYS BEFORE YOU DIG

PREPARED BY	REVISIONS	MADE BY	MADE DATE	APPROVED BY	APPROVED DATE
FIRM: L.D. KING, INC.					
ADDRESS: 2151 Convention Center Way, Ste. 100 Ontario, CA. 91764					
TELEPHONE: (909)937-0200 FAX: (909)937-0202					
SIGNATURE RCE 45183 DATE					

BENCH MARK DATA

NO. 157/71 ELEV. 595.256

LOCATION:

A 2 1/2" brass disk stamped "157/71" set in a traffic signal concrete base located at a northwest intersection of Euclid Avenue and Kimball Avenue

REFERENCE DRAWINGS

REVIEWED BY STAFF	BY	DATE
WATER:		
SEWER:		
FIRE:		
PLANNING:		
TRAFFIC:		
SERVICES:		

CITY ENGINEER'S STAFF	BY	DATE
DRAWN:		
DESIGNED:		
CHECKED:		
RECOMMENDED:		

APPROVED BY:

DIRECTOR OF PUBLIC WORKS/CITY ENGINEER

DATE: _____

CITY OF CHINO ENGINEERING DIVISION

STORM DRAIN IMPROVEMENT PLANS

DRAINAGE DETAILS

PROJECT NO.

SHEET 6 OF 13

DRAWING NO.

F:\400-499\481\0481-178\PLANS\StormStreet\481178-06SD.dwg, Plotted: Jan 31, 2013 - 10:10am

LEWIS OPERATING CORP

JN 481178

1/31/2013

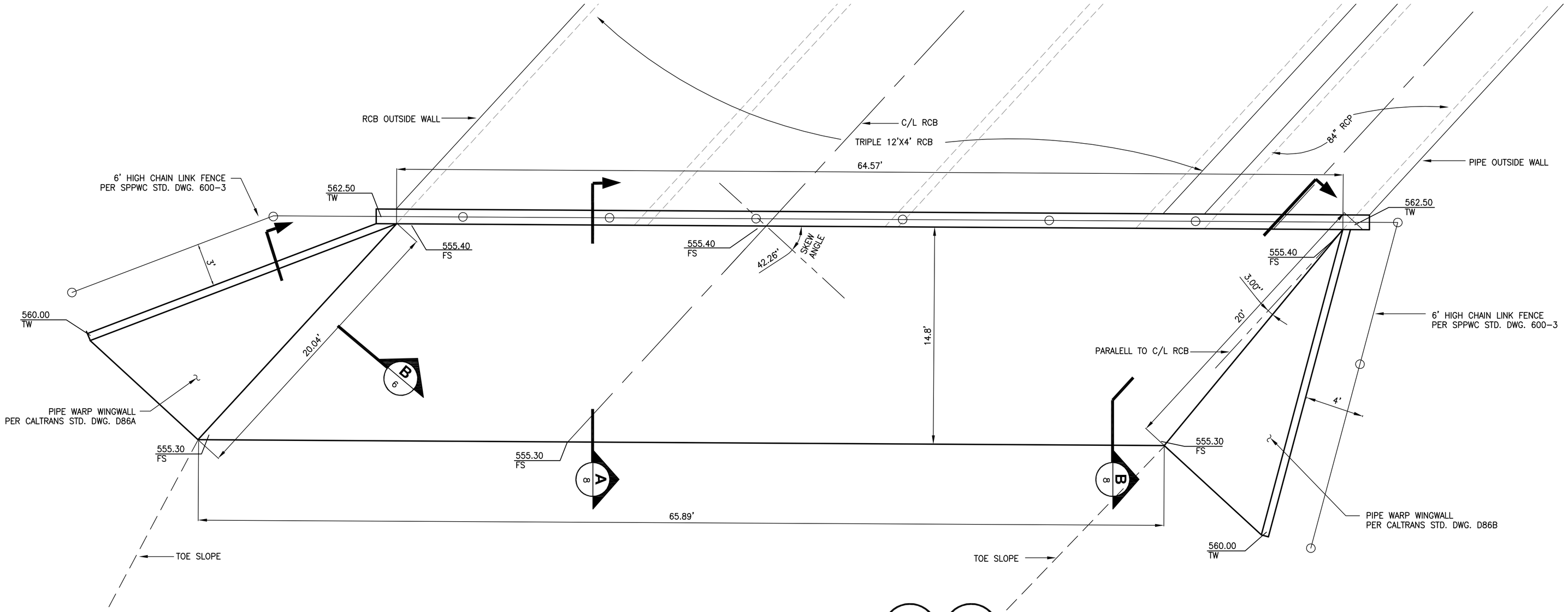

WARPED WINGWALL & CONCRETE APRON DETAIL AT OUTLET

SCALE 1"=4'

3 4

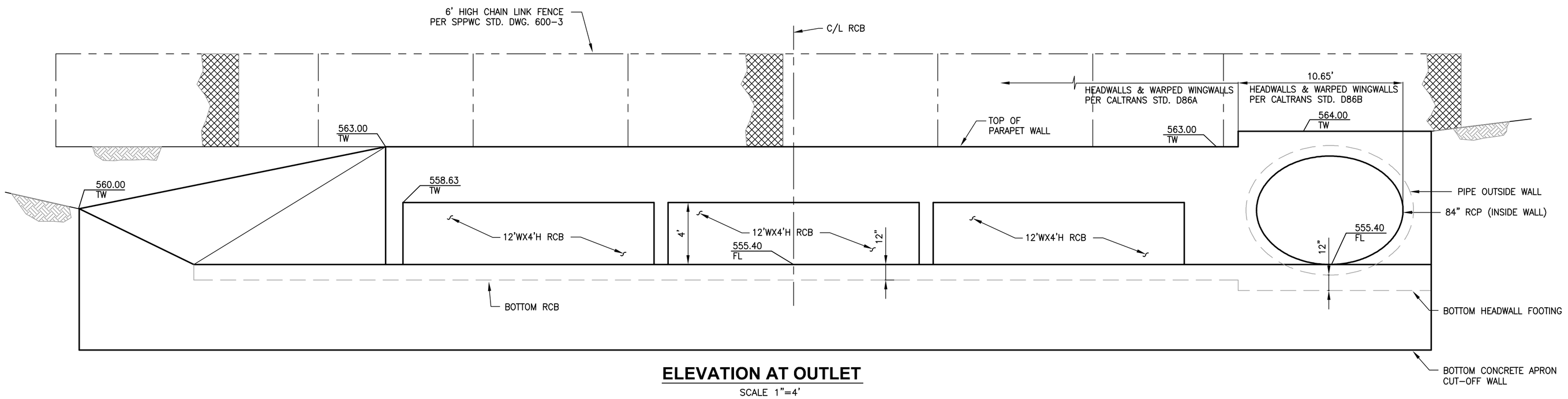

ELEVATION AT OUTLET

SCALE 1"=4'

SEAL

REGISTERED PROFESSIONAL ENGINEER
CARLA E. BERARD
No. 45183
Exp. 9/30/08
CIVIL
STATE OF CALIFORNIA

Underground Service Alert
DIG BEFORE YOU DIG
Call: TOLL FREE
1-800
227-2600
TWO WORKING DAYS BEFORE YOU DIG

GRAPHIC SCALE

4 0 2 4 8 16

(IN FEET)
1 inch = 4 ft.

PREPARED BY	REVISIONS	MADE BY	MADE DATE	APPROVED BY	APPROVED DATE
FIRM: L.D. KING, INC.					
ADDRESS: 2151 Convention Center Way, Ste. 100 Ontario, CA. 91764					
TELEPHONE: (909)937-0200 FAX: (909)937-0202					
SIGNATURE RCE 45183 DATE					

BENCH MARK DATA

NO. 157/71 ELEV. 595.256
LOCATION:
A 2 1/2" brass disk stamped "157/71" set in a traffic signal concrete base located at a northwest intersection of Euclid Avenue and Kimball Avenue

REFERENCE DRAWINGS

REVIEWED BY STAFF	BY	DATE	CITY ENGINEER'S STAFF	BY	DATE
WATER:			DRAWN:		
SEWER:			DESIGNED:		
FIRE:			CHECKED:		
PLANNING:			RECOMMENDED:		
TRAFFIC:					
SERVICES:					

APPROVED BY:

DIRECTOR OF PUBLIC WORKS/CITY ENGINEER

DATE: _____

CITY OF CHINO ENGINEERING DIVISION

STORM DRAIN IMPROVEMENTS PLAN

DRAINAGE DETAILS

PROJECT NO.

SHEET 7 OF 13

DRAWING NO.

IN 4R117R

I:FWIS OPERATING CORP F:\401-499\481\0481-17R\PLANS\StormStreet\4R117R-07SD.dwn Plotted: Jan 31, 2013 - 10:11am

1/31/2013

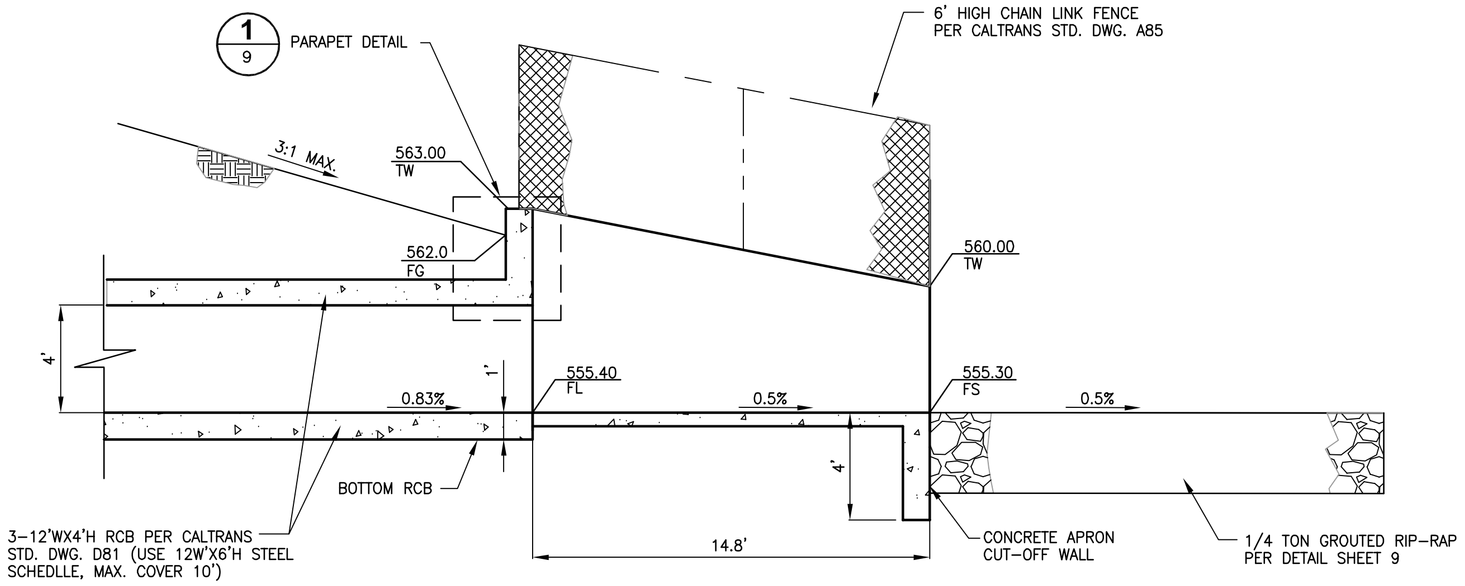

SECTION A
SCALE: 1"=4'

7

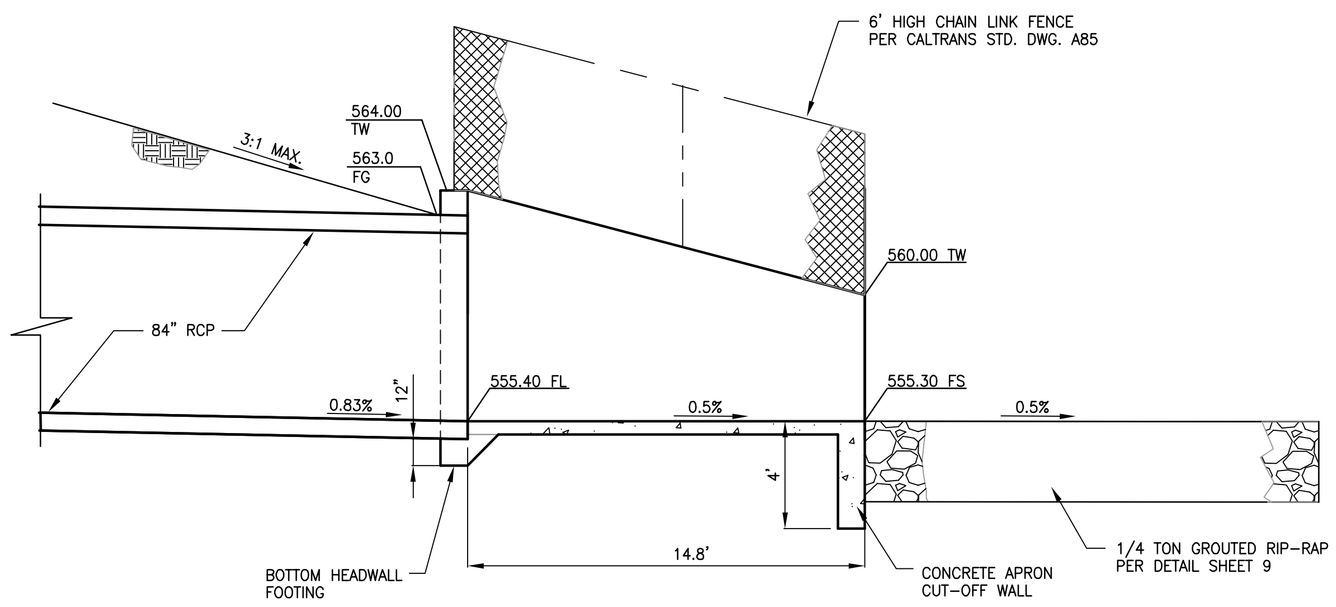

SECTION B
SCALE: 1"=4'

7

SEAL

REGISTERED PROFESSIONAL ENGINEER
CARLA E. BERARD
No. 45183
Exp. 9/30/08
CIVIL
STATE OF CALIFORNIA

Underground Service Alert
Call: TOLL FREE
1-800
227-2600
TWO WORKING DAYS BEFORE YOU DIG

PREPARED BY	REVISIONS	MADE BY	MADE DATE	APPROVED BY	APPROVED DATE
FIRM: L.D. KING, INC.	1				
ADDRESS: 2151 Convention Center Way, Ste. 100	2				
Ontario, CA. 91764	3				
TELEPHONE: (909)937-0200 FAX: (909)937-0202	4				
	5				
SIGNATURE RCE 45183 DATE	6				

BENCH MARK DATA
NO. 157/71 ELEV. 595.256
LOCATION:
A 2 1/2" brass disk stamped "157/71" set in a traffic signal concrete base located at a northwest intersection of Euclid Avenue and Kimball Avenue

REFERENCE DRAWINGS

REVIEWED BY STAFF	BY	DATE
WATER:		
SEWER:		
FIRE:		
PLANNING:		
TRAFFIC:		
SERVICES:		

CITY ENGINEER'S STAFF	BY	DATE
DRAWN:		
DESIGNED:		
CHECKED:		
RECOMMENDED:		

APPROVED BY:

DIRECTOR OF PUBLIC WORKS/CITY ENGINEER

DATE: _____

CITY OF CHINO ENGINEERING DIVISION

STORM DRAIN IMPROVEMENTS PLAN
DRAINAGE DETAILS

PROJECT NO.

SHEET 8 OF 13

DRAWING NO.

E:\400-499\481\0481-178\PLANS\StormStreet\481178-0850.dwg, Plotted: Jan 31, 2013 - 10:13am
LEWIS OPERATING CORP.
JN 481178
1/31/2013

RIP-RAP GRADATION		
RIPRAP CLASS	ROCK SIZE (FT)	% OF RIPRAP SMALLER THAN
1/4	2.25	100
	1.80	50
	0.95	10

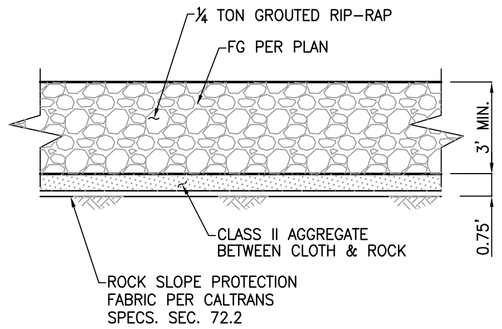

RIP-RAP DETAIL — NOT TO SCALE — 12

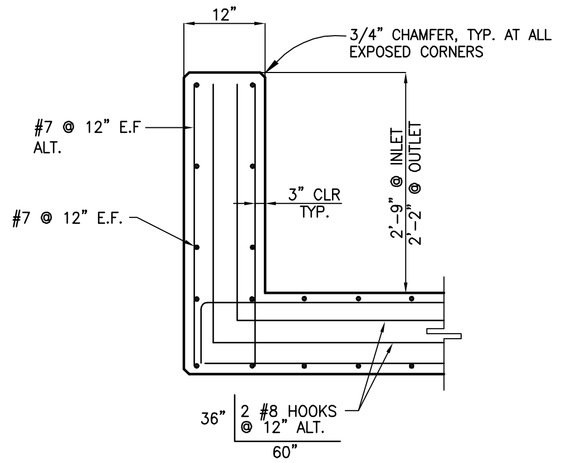

DETAIL — SCALE: 3/4"=1'-0" — 1 / 6,8

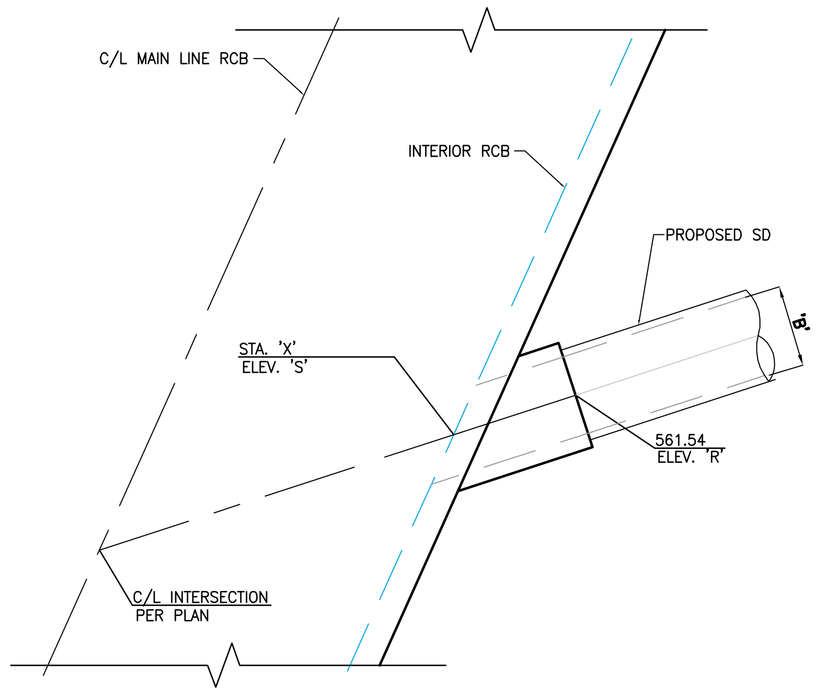

JUNCTION STRUCTURE TALBLE

LATERAL	'A'	'C'	'B'	STA. 'X'	ELEV. 'R'
'J-2'	47.74'	4.80'	36"	11+17.35	562.33
'J-3'	55.71'	3.85'	24"	11+30.50	562.33

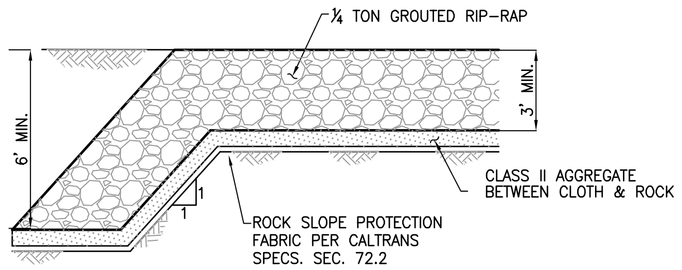

RIP-RAP CUT-OFF WALL — NOT TO SCALE — D / 10

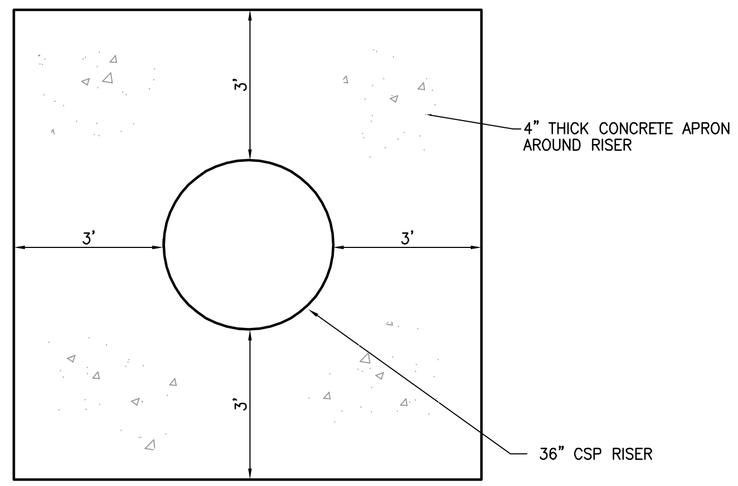

PLAN — NTS

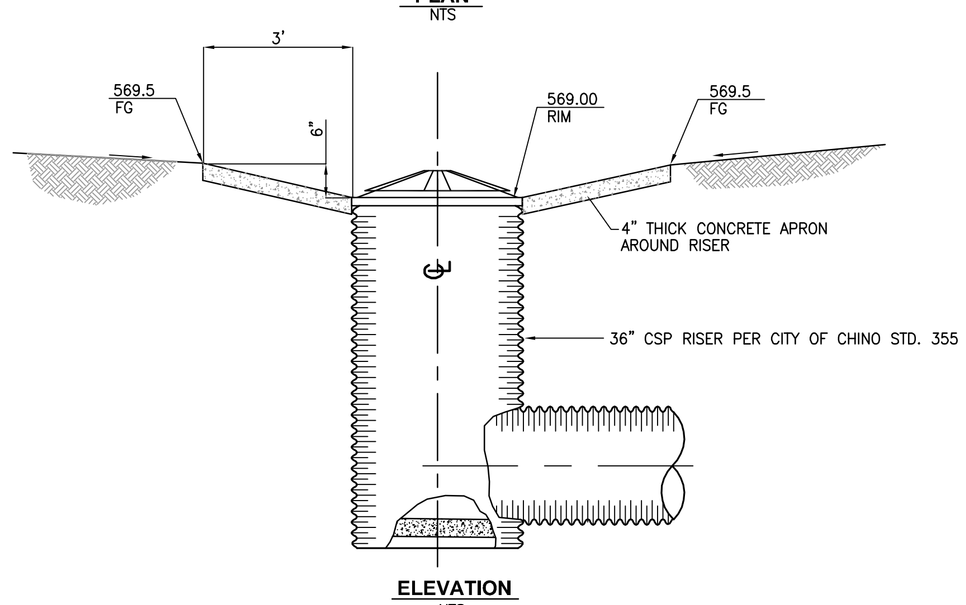

ELEVATION — NTS

DETAIL — NOT TO SCALE — 2

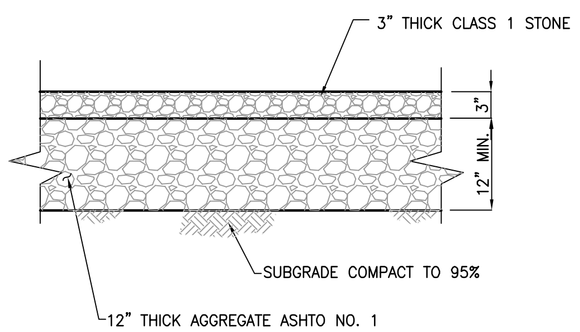

GRAVEL PAVING DETAIL — NOT TO SCALE — 16

CONCRETE APRON DETAIL — NOT TO SCALE — 17

SEAL

REGISTERED PROFESSIONAL ENGINEER — CARLA E. BERARD — No. 45183 Exp. 9/30/08 — CIVIL — STATE OF CALIFORNIA

Underground Service Alert — DIG BEFORE YOU DIG — Call: TOLL FREE 1-800 227-2600 — TWO WORKING DAYS BEFORE YOU DIG

PREPARED BY	REVISIONS	MADE BY	MADE DATE	APPROVED BY	APPROVED DATE
FIRM: L.D. KING, INC.	1				
ADDRESS: 2151 Convention Center Way, Ste. 100	2				
Ontario, CA. 91764	3				
TELEPHONE: (909)937-0200 FAX: (909)937-0202	4				
	5				
SIGNATURE RCE 45183 DATE	6				

BENCH MARK DATA

NO. 157/71 ELEV. 595.256
LOCATION:
A 2 1/2" brass disk stamped "157/71" set in a traffic signal concrete base located at a northwest intersection of Euclid Avenue and Kimball Avenue

REFERENCE DRAWINGS

REVIEWED BY STAFF	BY	DATE
WATER:		
SEWER:		
FIRE:		
PLANNING:		
TRAFFIC:		
SERVICES:		

CITY ENGINEER'S STAFF	BY	DATE
DRAWN:		
DESIGNED:		
CHECKED:		
RECOMMENDED:		

APPROVED BY:

DIRECTOR OF PUBLIC WORKS/CITY ENGINEER
DATE: _____

CITY OF CHINO ENGINEERING DIVISION

STORM DRAIN IMPROVEMENTS PLAN

DRAINAGE DETAILS

PROJECT NO.

SHEET 9 OF 13

DRAWING NO.

E:\400-499\481\0481-178\PLANS\StormStreet\481178-09SD.dwg, Plotted: Jan 31, 2013 - 10:14am

LEWIS OPERATING CORP.

JN 481178

1/31/2013

CONSTRUCTION NOTES

(12) — CONSTRUCT 1/4 TON GROUTED RIP-RAP PER DETAIL SHEET 9

(16) — CONSTRUCT 16" WIDE GRAVEL SERVICE ROAD PER DETAIL SHEET 9

CHANNEL CURVE DATA			
CURVE	RADIUS	LENGTH	TANGENT
C6	90.00'	31°45'17"	49.88'	25.60'

SERVICE ROAD CURVE/BEARING DATA				
CURVE/ BEARING	RADIUS	DELTA/ BEARING	LENGTH	TANGENT
L1		N03°38'58"E	108.72'	
C1	82.50'	32°43'32"	47.12'	24.22'
L2		N29°04'33"E	286.14'	
L3		N48°32'31"E	81.56'	
C2	32.50'	65°45'33"	37.30'	21.01'
L4		N17°13'02"W	3.24'	
C3	33.00'	90°12'55"	51.96'	33.12'
L5		N72°34'03"E	63.57'	
C4	35.00'	52°18'15"	31.95'	17.19'
L6		N20°28'44"E	51.14'	
L7		N29°04'33"E	280.08'	
C5	127.50'	31°45'17"	70.66'	36.26'
L8		N02°40'44"E	134.13'	

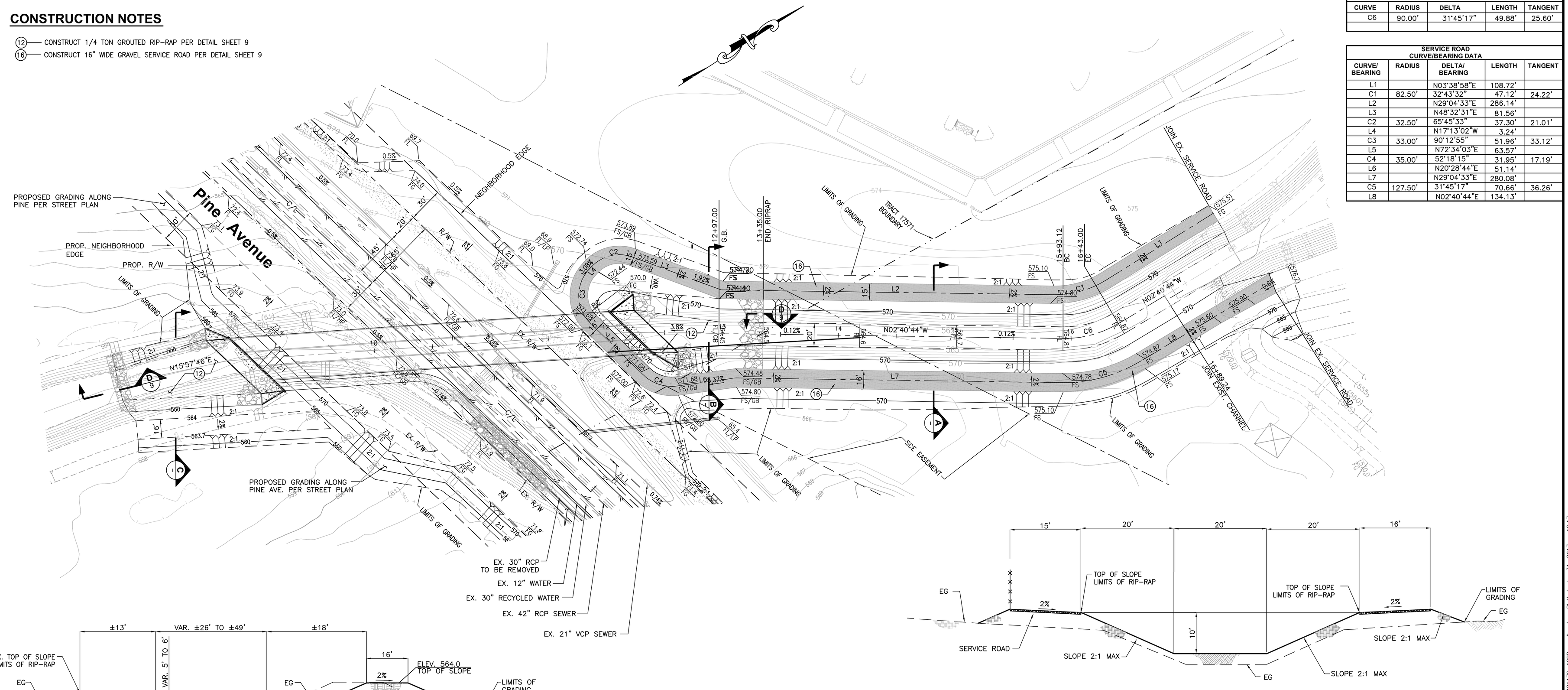

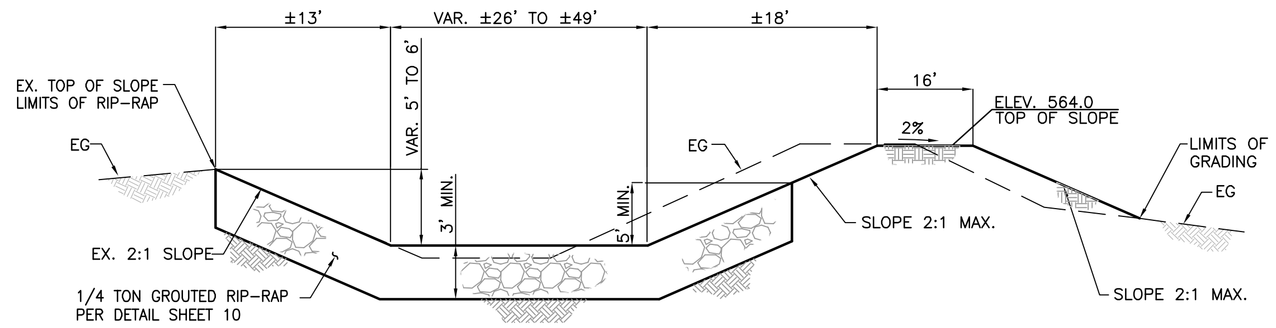

SECTION C
NOT TO SCALE

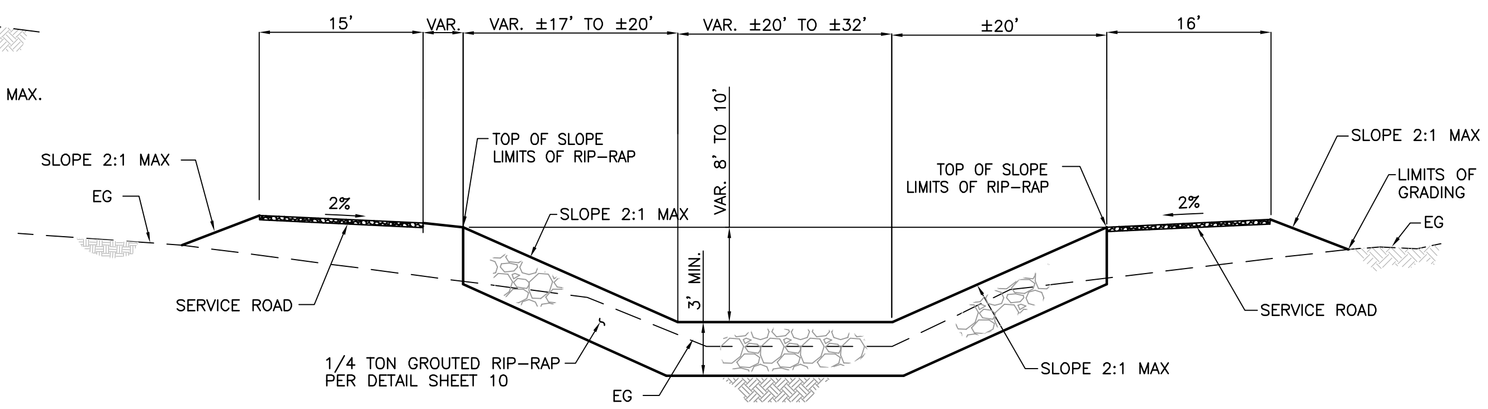

SECTION A
NOT TO SCALE

SECTION B
NOT TO SCALE

GRAPHIC SCALE
40 0 20 40 80 160
(IN FEET)
1 inch = 40 ft.

SEAL

REGISTERED PROFESSIONAL ENGINEER CARLA E. BERARD No. 45183 Exp. 9/30/08 CIVIL STATE OF CALIFORNIA

Underground Service Alert — DIG BEFORE YOU DIG — Call: TOLL FREE 1-800 227-2600 — TWO WORKING DAYS BEFORE YOU DIG

PREPARED BY	REVISIONS	MADE BY	MADE DATE	APPROVED BY	APPROVED DATE
FIRM: L.D. KING, INC.	1				
ADDRESS: 2151 Convention Center Way, Ste. 100 Ontario, CA. 91764	2				
TELEPHONE: (909)937-0200 FAX: (909)937-0202	3				
	4				
SIGNATURE RCE 45183 DATE	5				

BENCH MARK DATA
NO. 157/71 ELEV. 595.256
LOCATION:
A 2 1/2" brass disk stamped "157/71" set in a traffic signal concrete base located at a northwest intersection of Euclid Avenue and Kimball Avenue

REFERENCE DRAWINGS

REVIEWED BY STAFF	BY	DATE
WATER:		
SEWER:		
FIRE:		
PLANNING:		
TRAFFIC:		
SERVICES:		

CITY ENGINEER'S STAFF	BY	DATE
DRAWN:		
DESIGNED:		
CHECKED:		
RECOMMENDED:		

APPROVED BY:
DIRECTOR OF PUBLIC WORKS/CITY ENGINEER
DATE: _____

CITY OF CHINO ENGINEERING DIVISION

STORM DRAIN IMPROVEMENTS PLAN

EARTHEN CHANNEL ROUGH GRADING

PROJECT NO.
SHEET 10 OF 13
DRAWING NO.

1/31/2013

E:\400-499\481\0481-178\PLANS\StormStreet\481178-10SD_grading.dwg, Plotted: Jan 31, 2013 - 10:17am
LEWIS OPERATING CORP.
JN 481178

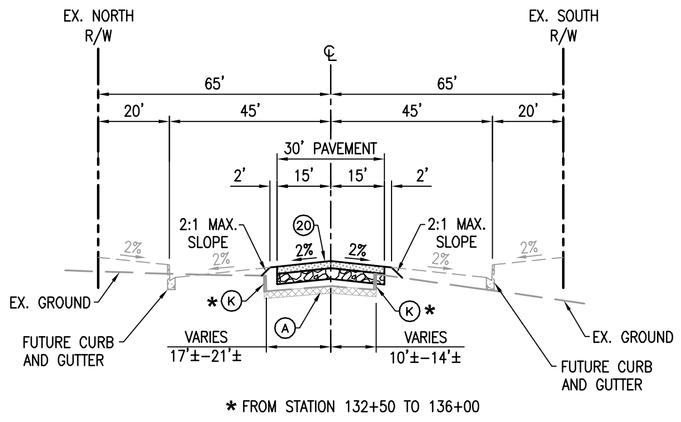

SECTION A-A
PINE AVENUE
STA. 132+50 TO 135+00
TYPICAL SECTION (TI=10)
NTS

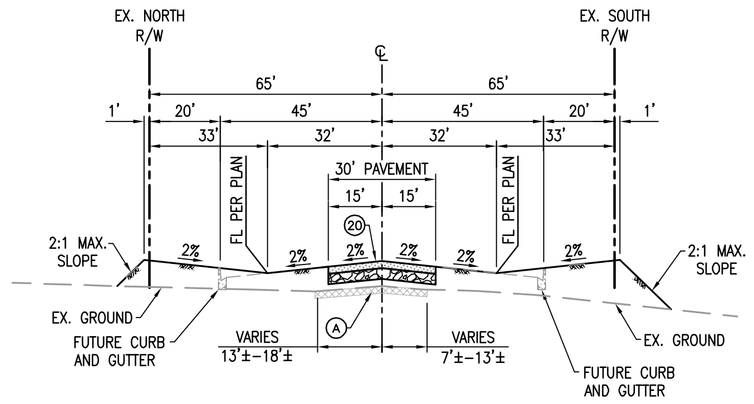

SECTION B-B
PINE AVENUE
STA. 135+00 TO 137+00 &
STA. 141+50 TO 147+55
TYPICAL SECTION (TI=10)
NTS

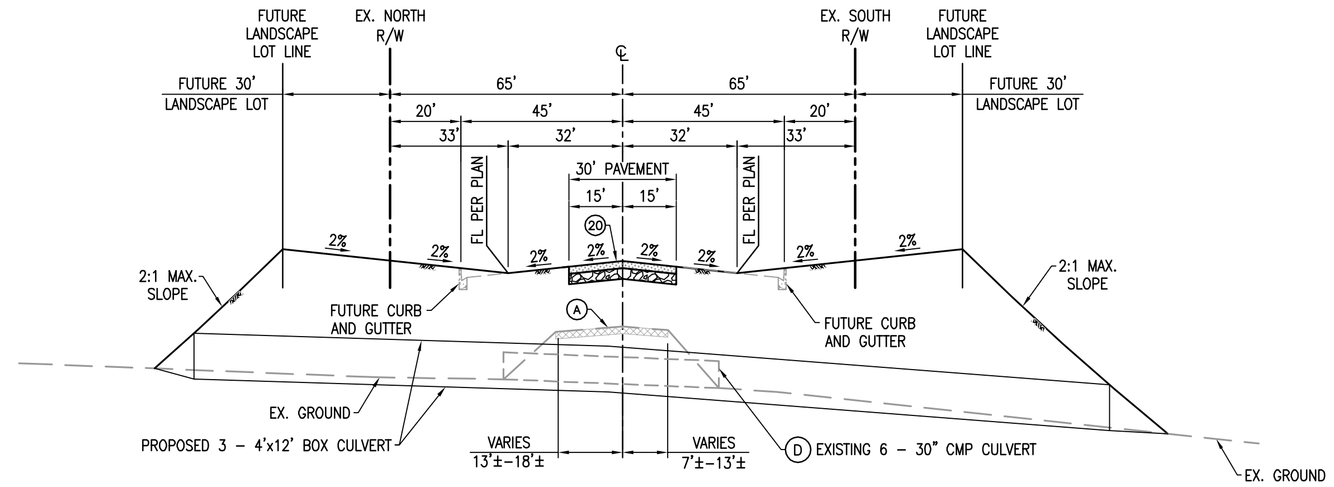

SECTION C-C
PINE AVENUE
STA. 137+00 TO 141+50
TYPICAL SECTION (TI=10)
NTS

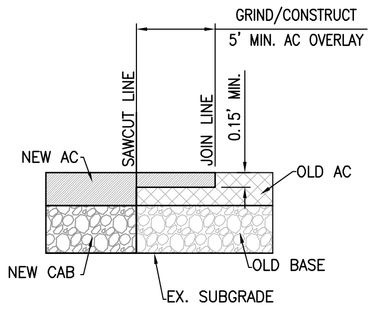

21 AC OVERLAY DETAIL
NTS

CONSTRUCTION NOTES
(20) — CONSTRUCT MINIMUM 7" AC OVER 8" CAB (SEE GENERAL NOTE 22)
(21) — GRIND AND OVERLAY AC PAVEMENT PER DETAIL ON SHEET 11

DISPOSITION NOTES
(A) — REMOVE AC PAVEMENT
(K) — REMOVE AC BERM
(D) — REMOVE STORM DRAIN STRUCTURE

LEGEND
- W — EXISTING WATER LINE
- RW — EXISTING RECYCLED WATER LINE
- S — EXISTING SEWER LINE
- ℄ — CENTER LINE
- RIGHT OF WAY
- PROPOSED EDGE OF PAVEMENT
- SCE EASEMENT
- SD — PROPOSED STORM DRAIN
- TRACT BOUNDARY
- PROPOSED SLOPE
- PROPOSED STORM DRAIN MANHOLE
- EX. GATE VALVE
- EX. POWER POLE
- EX. WIRE GUY
- EX. MANHOLE
- CONSTRUCT AC PAVEMENT
- GRIND & CONSTRUCT AC OVERLAY (0.15' MIN.)
- EX. AC PAVEMENT
- 73.0 FG _ 573.0 FG

ABBREVIATIONS
AC-ASPHALT CONCRETE
AV-AIR VACUUM VALVE
BC-BEGIN CURVE
CAB-CRUSHED AGGREGATE BASE
C/L-CENTERLINE
CMC-CEMENT MORTAR COATED
CML-CEMENT MORTAR LINED
CMP-CORRUGATED METAL PIPE
EC-END CURVE
EP-EDGE OF PAVEMENT
EX.-EXISTING
FG-FINISHED GRADE
FL-FLOW LINE
FS-FINISHED SURFACE
GP-GUARD POST
GB-GRADE BREAK
GSP-GALVANIZED STEEL PIPE
HP-HIGH POINT
LP-LOW POINT
LT.-LEFT
MAX.-MAXIMUM
MIN.-MINIMUM
PP-POWER POLE
PROP.-PROPOSED
PVC-POLYVINYLCHLORIDE
R26(S)-'NO STOPPING' SIGN
RCP-REINFORCED CONCRETE PIPE
RT.-RIGHT
RW-RECYCLED WATER
R/W-RIGHT OF WAY
S.A.R.I.-SANTA ANA REGIONAL INTERCEPTOR LINE
SCE-SOUTHERN CALIFORNIA EDISON
SD-STORM DRAIN
SFM-SEWER FORCE MAIN
SMH-SEWER MANHOLE
ST.-STREET
STA.-STATION
TACB-TOP ASPHALT CONCRETE BERM
VCP-VETRIFIED CLAY PIPE
WV-WATER VALVE

SEAL

REGISTERED PROFESSIONAL ENGINEER — CARLA E. BERARD — No. 45183 — Exp. 9/30/08 — CIVIL — STATE OF CALIFORNIA

Underground Service Alert — DIG BEFORE YOU DIG — Call: TOLL FREE 1-800 227-2600 — TWO WORKING DAYS BEFORE YOU DIG.

PREPARED BY	REVISIONS	MADE BY	MADE DATE	APPROVED BY	APPROVED DATE
FIRM: L.D. KING, INC.	1				
ADDRESS: 2151 Convention Center Way, Ste. 100	2				
Ontario, CA. 91764	3				
TELEPHONE: (909)937-0200 FAX: (909)937-0202	4				
	5				
SIGNATURE RCE 45183 DATE	6				

BENCH MARK DATA
NO. 157/71 ELEV. 595.256
LOCATION:
A 2 1/2" brass disk stamped "157/71" set in a traffic signal concrete base located at a northwest intersection of Euclid Avenue and Kimball Avenue

REFERENCE DRAWINGS
DWG. AA-3499

REVIEWED BY STAFF	BY	DATE
WATER:		
SEWER:		
FIRE:		
PLANNING:		
TRAFFIC:		
SERVICES:		

CITY ENGINEER'S STAFF	BY	DATE
DRAWN:		
DESIGNED:		
CHECKED:		
RECOMMENDED:		

APPROVED BY:
DIRECTOR OF PUBLIC WORKS/CITY ENGINEER
DATE: _____

CITY OF CHINO ENGINEERING DIVISION
STREET IMPROVEMENT PLAN
STREET SECTIONS AND DETAILS

PROJECT NO.
SHEET 11 OF 13
DRAWING NO.

1/31/2013

I:FWIS_OPERATING_CORP F:\400-499\481\Work\481TRACT.dgn 31-Jan-2013 10:19am

PINE AVENUE

570 N'LY — 580 CL — 570 S'LY

EX. TACB 21'± N/O ST. C/L
150.12' PAVEMENT TRANSITION
PROP. EP 15' N/O ST. C/L
PROP. FS @ ST. C/L
EXISTING FS @ ST. C/L
EX. TACB 15'± S/O ST. C/L
150.00' PAVEMENT TRANSITION
PROP. EP 15' S/O ST. C/L
250' VC
PVI STA = 138+34
PVI ELEV = 573.43
250' VC
PVI STA = 138+34
PVI ELEV = 573.73
250' VC
PVI STA = 138+34
PVI ELEV = 573.43
596.36' OPP
560.36' INV.
3-12'x4' RCB CULVERT

131+00 (569.51 TACB) (569.87 FL)
131+50 (569.82 TACB) (569.20 FL)
132+00 (570.30 TACB) (569.66 FL)
132+50 (570.73 TACB) 132+50 20.92' LT. (570.06 FL) GB JOIN EXISTING
133+00 570.46
134+00 GB 571.25
135+00 571.75
136+00 572.26
137+00 572.76
137+34 BVC 572.83
137+59 573.03
137+84 573.1
138+09 HP 573.13
138+34 573.12
138+59 573.07
139+04 572.98
139+09 572.85
139+34 EVC 572.68
140+00 572.19
141+00 571.45
570.70

131+00 (569.48)
131+50 (569.79)
132+00 (570.09)
132+50 GB (570.33) JOIN EXISTING
133+00 570.74
134+00 GB 571.55
135+00 572.05
136+00 572.56
137+00 573.06
137+34 BVC 573.23
137+59 573.33
137+84 573.40
138+09 HP 573.43
138+34 573.42
138+59 573.37
139+04 573.28
139+09 573.15
139+34 EVC 572.98
140+00 572.49
141+00 571.75
571.00

131+00 (569.60 TACB)
131+50 (569.82 TACB)
132+00 (570.21 TACB)
132+50 (570.47 TACB)
133+00 570.28
134+00 GB 571.25
135+00 571.75
136+00 572.26
137+00 572.76
137+34 BVC 572.83
137+59 573.03
137+84 573.1
138+09 HP 573.13
138+34 573.12
138+59 573.07
139+04 572.98
139+09 572.85
139+34 EVC 572.68
140+00 572.19
141+00 571.45
570.70

131+00 (568.90 FL)
131+50 (569.16 FL)
132+00 (568.54 FL)
132+50 14.35' RT. (569.80 FL) GB JOIN EXISTING

142+00.00 - MATCH LINE - SEE SHEET 13

PROFILE SCALE
HORIZ: 1" = 40'
VERT: 1" = 4'

131 132 133 134 135 136 137 138 139 140 141 142

SOUTHERN CALIFORNIA EDISON EASEMENT
EX. TRANSMISSION TOWER
EX. TRANSMISSION TOWER
EX. 21" VCP SEWER
PAVEMENT TRANSTION
EXISTING 42" RCP (PVC LINED) SEWER LINE OR 36" OR 39" VCP (EXTRA STRENGHT) SEWER LINE SANTA ANA WATERSHED PROJECT AUTHORITY S.A.R.I. REACH IV-D AND E, CONTRACT NO. 1
PPH2007311E
LIMITS OF GRADING
SMH, PP, R26(S) SIGN
SPEED METER
SMH
PROP. EARTH SWALE FL
ADVERTISED SIGN
PROP. 24" RCP SD PER SHEET 3
EX. R/W
R26(S)
SD HEADWALL
PROPOSED 36" RCP SD PER SHEET 4
TRACT 17577 BOUNDARY
PROP. 24" RCP SD PER SHEET 4
(570.47TACB) (569.80FL) JOIN EX.
EX. AC PAVEMENT
EX. 4"G
EX. 2"G
EX. 42"S
EX. 30"RW
N71°57'35"E
EX. 46"GSP
R26(S) SIGN
GP, WV, AV
BARDED WIRE FENCE
AV
PP
EX. 6-30" CMP PIPES
SD HEADWALL
WIRE GUY AND POLE
ADVERTISED SIGN
EX. 46"x36" TEMP. GALVANIZED STEEL PIPE-ARCH
PAVEMENT TRANSITION
REMOVE AC BERM NORTH AND SOUTH SIDES OF C/L
134+18.50 C/L EX. 20' DRIVEWAY
EXISTING 12" PVC WATER
EXISTING 30" CMC-CML S.P. RECLAIMED WATER LINE OUTFALL EXTENSION PRADO REGIONAL PARK WATER SUPPLY PROJECT NO. 1, COUNTY OF SAN BERNARDINO
LIMITS OF GRADING
PROPOSED 3-12'x4' BOX CULVERT PER SHEET 3
PROPOSED 84" RCP SD PER SHEET 4
LIMITS OF GRADING
ROLAND & JEAN BARTHELEMY
AP# 1057-191-03
NOT A PART
PPH4309327E
TRACT 17577 BOUNDARY
LIMITS OF GRADING

142+00.00 - MATCH LINE - SEE SHEET 13

See Sheet 10 Channel Grading

LEGEND

- CONSTRUCT AC PAVEMENT
- EXISTING AC PAVEMENT
- AC OVERLAY
- CRUSH ROCK ROAD
- 73.0 FG — 573.0 FG

CONSTRUCTION NOTES

(20) CONSTRUCT MINIMUM 7" AC OVER 8" CAB (SEE GENERAL NOTE 22)
(21) GRIND AND OVERLAY AC PAVEMENT PER DETAIL ON SHEET 11
(22) ADJUST SEWER MANHOLE TO GRADE PER CITY STD. DWG. NO. 535
(23) ADJUST STORM DRAIN MANHOLE TO GRADE PER CITY STD. DWG. NO. 535
(25) INSTALL BARRIER POST (PERMANENT) PER CITY STD. DWG. NO. 860
(26) INSTALL 5'x7' LIGHT CLASS ROCK RIP-RAP PAD
(27) ADJUST TRAFFIC SIGNAL BOX TO GRADE
(P) PROTECT IN PLACE

DISPOSITION NOTES

(A) REMOVE AC PAVEMENT
(B) RELOCATE POWER POLE BY SCE
(C) RELOCATE WIRE GUY BY SCE
(D) REMOVE STORM DRAIN STRUCTURE
(E) REMOVE ROCK RIP RAP
(F) REMOVE TEMPORARY CONCRETE BARRIERS AND DELINEATORS
(G) RELOCATE SIGN
(H) REMOVE TEMPORARY CRASH CUSHION MODULES
(I) REMOVE/RELOCATE FENCE
(J) RELOCATE AIR VAC. AND GUARD POSTS PER CITY STD. DWG. NO. 435
(K) REMOVE AC BERM
(L) RELOCATE MAIL BOX
(M) RELOCATE BOULDERS
(N) RELOCATE WATER VALVE PER CITY STD. DWG. NO. 450

NOTE:

REMOVE ALL EXISTING DELINEATORS WITHIN PROPOSED IMPROVEMENT

SCALE: 1"=40'

GRAPHIC SCALE
40 0 20 40 80 160
(IN FEET)
1 inch = 40 ft.

PRELIMINARY
NOT FOR CONSTRUCTION

SEAL
REGISTERED PROFESSIONAL ENGINEER CARLA E. BESORD No. 45183 Exp. 9/30/08 CIVIL STATE OF CALIFORNIA

Underground Service Alert
Call: TOLL FREE 1-800 227-2600
TWO WORKING DAYS BEFORE YOU DIG

PREPARED BY	REVISIONS	MADE BY	MADE DATE	APPROVED BY	APPROVED DATE
FIRM: L.D. KING, INC.	1				
ADDRESS: 2151 Convention Center Way, Ste. 100 Ontario, CA. 91764	2				
TELEPHONE: (909) 937-0200 FAX: (909) 937-0202	3				
	4				
SIGNATURE RCE 45183 DATE	5				

BENCH MARK DATA
NO. 157/71 ELEV. 595.256
LOCATION:
A 2 1/2" brass disk stamped "157/71" set in a traffic signal concrete base located at a northwest intersection of Euclid Avenue and Kimball Avenue

REFERENCE DRAWINGS

REVIEWED BY STAFF	BY	DATE
WATER:		
SEWER:		
FIRE:		
PLANNING:		
TRAFFIC:		
SERVICES:		

CITY ENGINEER'S STAFF	BY	DATE
DRAWN:		
DESIGNED:		
CHECKED:		
RECOMMENDED:		

APPROVED BY:
DIRECTOR OF PUBLIC WORKS/CITY ENGINEER
DATE:

CITY OF CHINO ENGINEERING DIVISION
STREET IMPROVEMENT PLAN & PROFILE
Pine Avenue
From ±1230' w/o Rincon Meadows Ave. To ±280' w/o Rincon Meadows Ave.

PROJECT NO.
SHEET 12 OF 13
DRAWING NO.

JN 4811178 | FWS OPERATING CORP | F:\401-499\481\0481-178\PLANS\StormStreet\481178-12ST.dwn Plotted: Jan 31, 2013 - 10:20am

PINE AVENUE

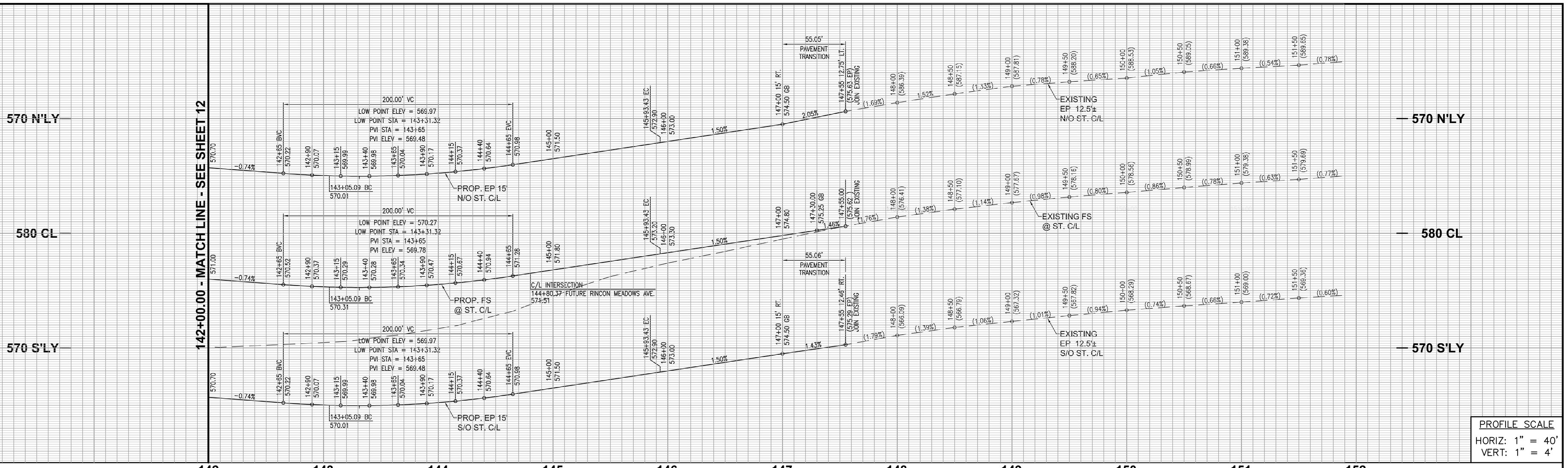

PROFILE SCALE
HORIZ: 1" = 40'
VERT: 1" = 4'

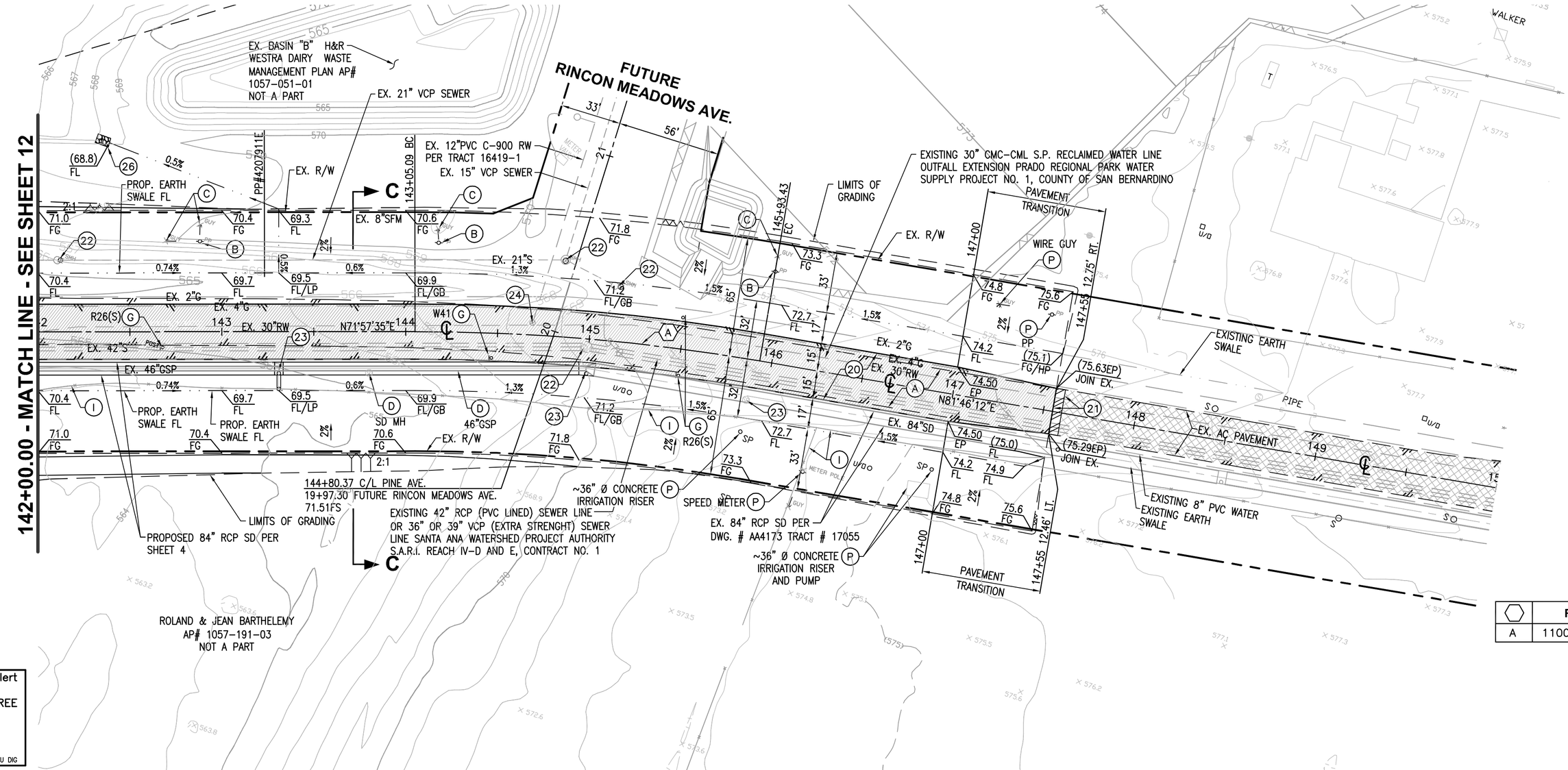

CONSTRUCTION NOTES

(20) CONSTRUCT MINIMUM 7" AC OVER 8" CAB (SEE GENERAL NOTE 22)
(21) GRIND AND OVERLAY AC PAVEMENT PER DETAIL ON SHEET 11
(22) ADJUST SEWER MANHOLE TO GRADE PER CITY STD. DWG. NO. 535
(23) ADJUST STORM DRAIN MANHOLE TO GRADE PER CITY STD. DWG. NO. 535
(24) ADJUST WATER VALVE TO GRADE PER CITY STD. DWG. NO. 455
(26) INSTALL 5'x7' LIGHT CLASS ROCK RIP-RAP PAD
(P) PROTECT IN PLACE

DISPOTION NOTES

(A) REMOVE AC PAVEMENT
(B) RELOCATE POWER POLE BY SCE
(C) RELOCATE WIRE GUY BY SCE
(D) REMOVE STORM DRAIN STRUCTURE
(G) RELOCATE SIGN
(I) REMOVE/RELOCATE FENCE

LEGEND

CONSTRUCT AC PAVEMENT
EXISTING AC PAVEMENT
AC OVERLAY
73.0 FG — 573.0 FG

SCALE: 1"=40'

GRAPHIC SCALE
40 0 20 40 80 160
(IN FEET)
1 inch = 40 ft.

CURVE DATA

	R	Δ	L	T	REMARK
A	1100.00'	N09°48'37"	188.35'	94.40'	ST. C/L

PRELIMINARY
NOT FOR CONSTRUCTION

SEAL
REGISTERED PROFESSIONAL ENGINEER CARLA E. BEGLEY No. 45183 Exp. 9/30/08 CIVIL STATE OF CALIFORNIA

Underground Service Alert
Call: TOLL FREE 1-800 227-2600
TWO WORKING DAYS BEFORE YOU DIG

PREPARED BY			
FIRM:	L.D. KING, INC.		
ADDRESS:	2151 Convention Center Way, Ste. 100		
	Ontario, CA. 91764		
TELEPHONE:	(909)937-0200	FAX: (909)937-0202	
	SIGNATURE	RCE 45183	DATE

REVISIONS	MADE BY	MADE DATE	APPROVED BY	APPROVED DATE

BENCH MARK DATA
NO. 157/71 ELEV. 595.256
LOCATION:
A 2 1/2" brass disk stamped "157/71" set in a traffic signal concrete base located at a northwest intersection of Euclid Avenue and Kimball Avenue

REFERENCE DRAWINGS

REVIEWED BY STAFF	BY	DATE
WATER:		
SEWER:		
FIRE:		
PLANNING:		
TRAFFIC:		
SERVICES:		

CITY ENGINEER'S STAFF	BY	DATE
DRAWN:		
DESIGNED:		
CHECKED:		
RECOMMENDED:		

APPROVED BY:
DIRECTOR OF PUBLIC WORKS/CITY ENGINEER
DATE: _____

CITY OF CHINO ENGINEERING DIVISION

STREET IMPROVEMENT PLAN & PROFILE
Pine Avenue
From ±280' w/o Rincon Meadows Ave. to ±275' e/o Rincon Meadows Ave.

PROJECT NO.
SHEET 13 OF 13
DRAWING NO.

JN 4811178 | FWS OPERATING CORP | F:\1400-499\4811\4811-178\PLANS\StormSteet\4811178-13ST.dwn Plotted: Jan 31, 2013 - 10:21am