APPENDIX 3-A

Existing Studies

Devil's Gate and Eaton Stormwater Flood Management Project

Appendix 3-A includes:

- ✓ Eaton Wash Dam Geomatrix Seismic Report
- ✓ Hazard Warning and Contingency Plan for Arroyo Seco Channel
- ✓ Draft Devil's Gate Water Conservation project concept report

EATON WASH DAM

EARTHQUAKE PERFORMANCE EVALUATION OF OUTLET GATE TOWER

PHASE-I: LINEAR ELASTIC ANALYSIS

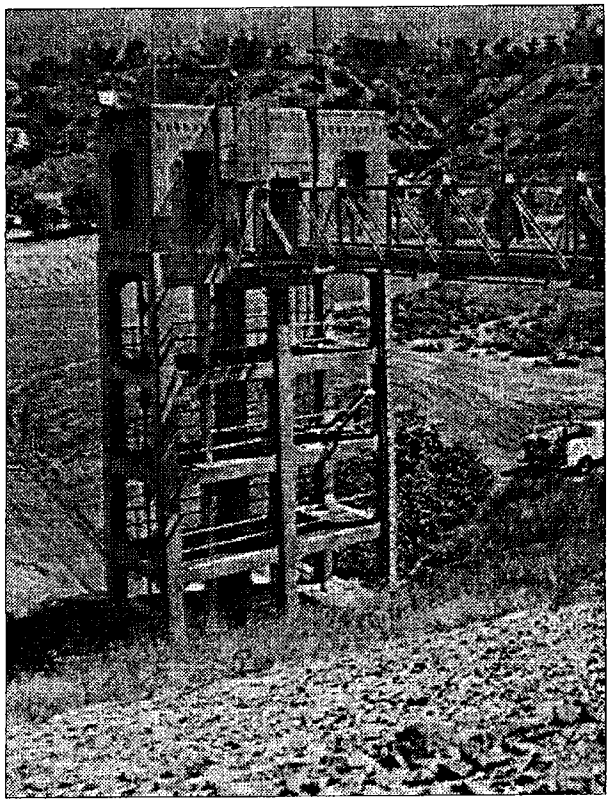

DRAFT REPORT
September 1997

QUEST Structures
Orinda, California

Prepared for
Los Angeles County
Department of Public Works
Alhambra, California

TABLE OF CONTENTS

SYMMARY 1

1. **INTRODUCTION** 2

2. EVALUATION **CRITERIA AND METHOD OF ANALYSIS** 4

   2.1 General 4

   2.2 Material Properties 4

   2.3 Cross Section Properties 6

   2.4 Structural Modeling of Tower, substructure, and Foundation Soil 9

   2.5 Structural Loads 13

3. **EARTHQUAKE RESPONSE OF TOWER** 19

   3.1 General Considerations 19

   3.2 Dynamic Characteristics of Tower Structure 19

   3.3 Nodal Displacements and Cross Section Forces 28

4. **COMPARISON OF CROSS SECTION REQUIRED AND DESIGN STRENGTHS** 41

   4.1 General 41

   4.2 Bending Moment-Axial Force Interaction Diagrams 41

   4.3 Evaluation of Results 41

5. **CONCLUSION** 44

6. **REFFERENCES** 45

SUMMARY

This report presents the results of safety evaluation of the outlet gate tower at Eaton Wash Dam during a postulated maximum credible earthquake (MCE). The safety evaluation is conducted in two phases: Phase I consists of this report dealing with the linear elastic earthquake response analysis, and Phase II includes a non-linear analysis to be performed subsequently.

The outlet gate tower at Eaton Wash Dam is a reinforced concrete structure with a total height of 73 ft. The tower is modeled as a 3D frame consisting of beams and columns. The model includes interaction effects with the footing substructure as well as with the foundation soil. All dead loads including weight of the gate hoist at the tower top, the hydro-mechanical equipment, and of the access bridge are accounted for in the force and mass computation. The earthquake input included 3-component acceleration response spectra, representing the 84th percentile ground motion for a magnitude 7.3 MCE on the Sierra Madre Fault at 2 km from the dam site. The peak ground acceleration was estimated to be 1.1g. Envelopes of the maximum and minimum cross section forces are computed for all critical beam and column sections using the response-spectrum mode-superposition technique.

The results of linear analysis show that the tower will be exposed to very large cross section forces during the postulated MCE ground motion. These forces are far beyond the yield lines of the corresponding bending moment-axial force interaction diagrams. The demand/capacity or required/design strength ratios reach values above 10 in many column and beam sections. This indicates that the steel yielding and concrete crushing will be extensive during the MCE shaking. The maximum tower displacements computed by the linear structural model with the effective section properties (cracked section), exceed values of 20" in the longitudinal and 18" in the transverse directions. With such large displacements of the tower, the access bridge is likely to be torn off its supports and the hydro-mechanical equipment be damaged and put out of operation.

Based on the results of linear elastic analysis, it is concluded that the tower will undergo severe nonlinear behavior. Plastic hinges could be expected to form at all column and beam connections and the structure to dissipate earthquake energy through the hysteretic loops. How many hysteretic cycles each plastic hinge would be able to resist before a complete collapse, could be predicted only by a nonlinear analysis. In such a nonlinear analysis, the generation sequence of the plastic hinges and their possible collapse will be determined to assess whether the tower will remain stable during the earthquake excitation. The non-linear analysis will also provide a more realistic estimate of displacements and their effects on the hydro-mechanical equipment, which are essential to an immediate release of the reservoir water in the event of a damaging earthquake.

In conclusion, the linear elastic analysis indicates that the tower will experience very large forces and displacements during a strong earthquake such as the MCE. The stability of the tower will significantly be reduced due to the excessive yielding of the reinforcing steel and crushing of the concrete, an indication that the non-linear analysis is imperative for the final evaluation of the seismic safety. Therefore, we recommend to proceed with Phase II work, which would provide more definitive conclusions on the tower safety and effective retrofitting measures.

1. INDRODUCTION

This report is a part of the dam safety evaluation undertaken by LACDPW. The report summarizes the results and findings of a linear elastic response analysis for the Outlet Gate Tower at Eaton Wash Dam during the maximum credible earthquake. The dam is located in the City of Arcadia, at foothill of the Sierra Madre Mountain in a high seismic area in vicinity of the active Sierra Madre Fault. The work presented in this report was performed as a subcontract to Geomatrix Consultants, San Francisco, California.

The dam and outlet gate tower were designed and built in 1936 – 1937 by the U.S. Army Corps of Engineers. It serves for flood control and water flow regulation during rainy seasons in Los Angeles County. It is an earth fill dam with crest at El. 902 ft and foundation at El. 840 ft (see drawing: General Plane and Sections). The dam is equipped with a gateless 270-ft wide concrete spillway at El. 887.5 ft and a long spillway shut. The outlet gate tower is located at the middle of dam at the upstream toe of the dam. It has four vertical gates for regulation of water discharge through four 5x7-ft reinforced concrete conduits located beneath the dam (see drawings No. 270.1).

The four vertical steel gates are mounted within the reinforced concrete substructure of the outlet gate tower (see drawing No. 272.1). The substructure is founded at El. 841 ft and supports the outlet gate tower at El. 860 ft. At the upstream end of the substructure there are the trash racks, as well as the wing walls for the conduits and dam protection of in-flowing water.

The outlet gate tower is a reinforced concrete structure composed of six vertical columns interconnected by transverse and longitudinal beams forming a 1x2-bay frame type structure. The tower layout is 14x30 ft at the bottom and 12x30 ft at the top. It has four elevations (excluding roof) extending from El.860 to 902 ft (see drawings: No. 275.1, No.273.1 and Fig.1.1). The mechanical equipment for operation of the gates are at the fourth elevation. Access from the dam crest to the equipment room is over the foot steel bridge (see drawing No.271.1).

The purpose of this study was to evaluate performance of the outlet gate tower during the maximum credible earthquake. The structure was built in the middle of 1930's, when very little or no allowance for the seismic forces was provided. Therefore, the safety and accessibility of this structure in the event of a strong earthquake ground shaking needed to be evaluated. Under such circumstances the outlet gates must remain functional, because the dam safety conditions may require for a controlled partial release of water and possibly a complete drawdown of the reservoir.

The Phase I work focuses on a linear elastic response analysis of the outlet gate tower. For this purpose, a 3D structural model is developed which includes all significant components of the tower, as well as of the supporting substructure. The 3D model accounts for masses of the structural elements, gatehouse, supporting substructure, steel bridge, and the associated reservoir water. The dynamic stiffness of the foundation soil is estimated for the predominant two horizontal and one vertical vibration frequencies.

The extreme section forces are evaluated for the MCE acceleration response spectra (84th percentile) and are superimposed with the forces due to the static dead loads. The computed forces – required strength (i.e. force demands) are compared with the actual strength – design strength (i.e. force capacities) of the reinforced concrete sections. The conclusions on a possible level of damage are drawn, and recommendations for further analysis of the outlet gate tower are provided at the end of report.

FIG. 1- 1 OUTLET GATE TOWER WITH FOOT BGIDGE

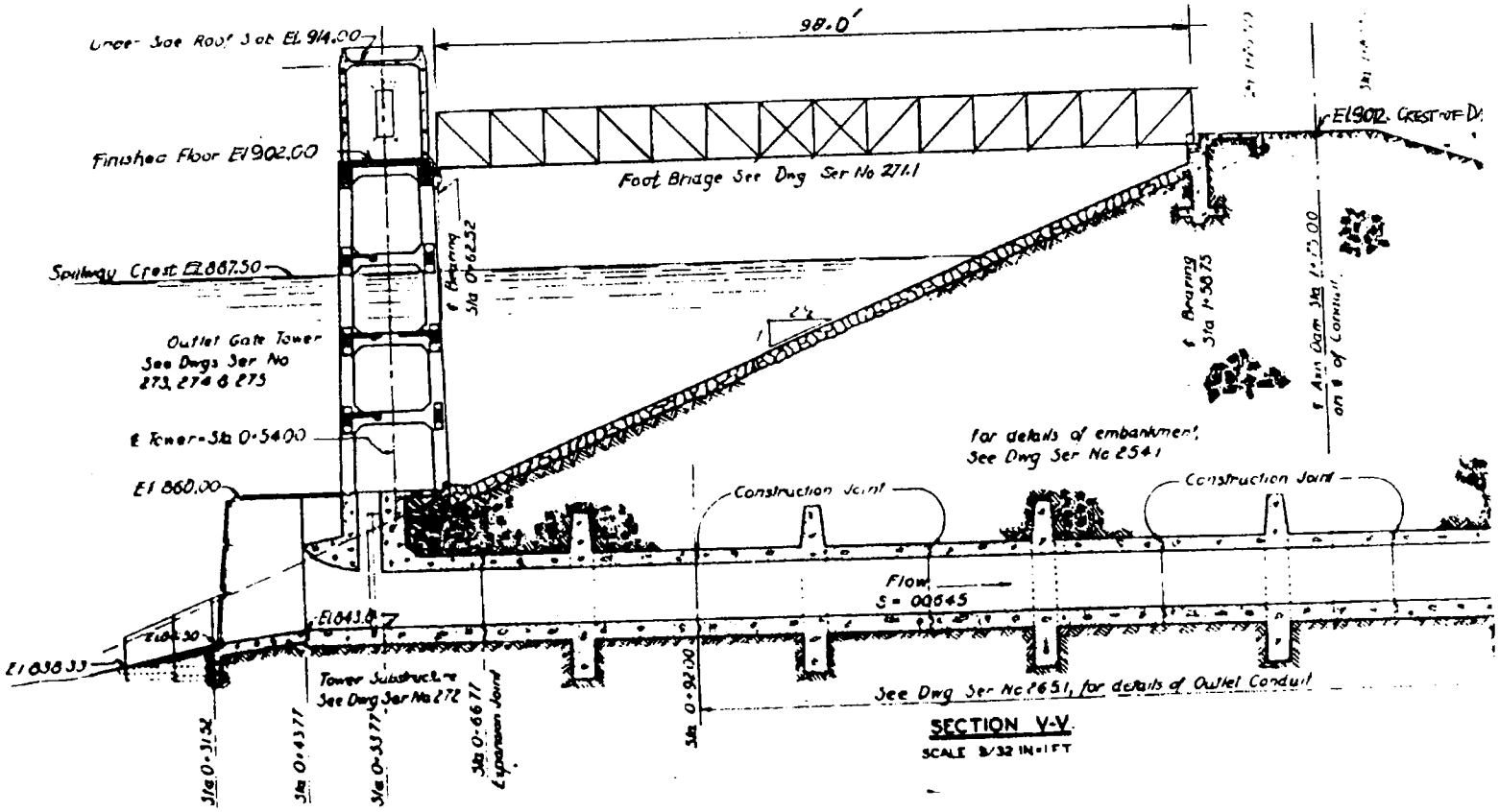

2. EVALUATION CRITERIA AND METHOD OF ANALYSIS

2.1 General

No specific criteria or code will be applied for this kind of structure. The ICOLD and USCOLD recommendations for analysis of dam appurtenant structures, particularly for outlet towers will be employed. Computation of the section strengths will be performed according to ACI Code 318-88, as well as the gross section and effective section properties. Structural modeling will include 3D geometry of the tower; thus allowing for the simultaneous application of all three components of the earthquake ground motion. Interaction effects of the substructure, foundation soil, reservoir water, and the access bridge will be included in the dynamic response analysis of the tower. Earthquake ground motion was determined by a detailed seismological/geological investigation counducted by Geomatrix Consultants, Inc. Soil properties were also part of the geotechnical report provided by Geomatrix. Concrete and reinforcing steel properties were estimated in accordance with the concrete class and steel grade commonly used in the 1930's.

2.2 Material Properties

Concrete

Weight of the tower reinforced concrete with a reinforcement ratio of 1% to 2%, is assumed to be $w_c = 150$ lb/ft^3. The cylinder crushing strength of the concrete is assumed to have a value of $f_c' = 3000$ psi. The initial tangent stiffness or modulus of elasticity is calculated according to ACI Code 318-88, i.e.,

$$E_c = w_c^{1.5}\, 33\, f_c'^{\,0.5} = 150^{1.5}\, 33\, (3000)^{0.5} = 3{,}320{,}561 \text{ psi} = 478{,}161 \text{ ksf or } 480{,}000 \text{ ksf.}$$

The Poisson's ratio is taken as $\nu = 0.17$. Therefore, the shear modulus has the following value:

$$G = \frac{E}{2(1+\nu)} = 204342 \cong 205000 \text{ ksf (kips/ft}^2\text{)}$$

For the computation of tower deformation the rapture modulus of the concrete is taken according to ACI Code 318-88,

$$f_r = 7.5\, f_c'^{\,0.5} = 7.5\, (3000)^{0.5} = 411 \text{ psi} = 59 \text{ ksf.}$$

Reinforcing Steel

The reinforcing steel is assumed to be GRADE 40. According to ASTM A615 the yield strength is $f_y = 40$ ksi and the ultimate strength is $f_{ul} = 70$ ksi. The Young's modulus is $E_s = 29000$ ksi = 4.176×10^6 ksf.

The steel to concrete modulus ratio is $n = E_s/E_c = 8.7$.

Bridge Steel

The bridge steel is determined according to AISC specifications (see drawing No.271.1). Steel A36 with the yield stress of $f_y = 32$ ksi and the ultimate strength of $f_u = 52$ ksi is assumed for the bridge members. Other properties for the bridge steel are as follows:

Weight:	$w_s = 0.283$ lib/in^3 = 0.489024 kcf (kips/ft^3)
Young modulus:	$E_s = 29{,}000$ ksi = 4.176×10^6 ksf
Shear modulus:	G = 1200 ksi = 1.728×10^6 ksf.

Reservoir Water

A standard weight of $w_w = 0.062426$ kcf is assumed for computation of the added mass of reservoir water.

Foundation Soil

The properties of foundation soil are taken from the geotechnical report provided by Geomatrix Consultants, Inc. The properties needed for computation of the static and dynamic soil stiffnesses are weight of soil, $w_{soil} = 125$ pcf, Poisson's ratio, $\nu = 0.35$. Other soil properties are the strain dependent shear modulus and damping as follows:

Soil properties	Low strains	High strains
Shear wave velocity, β_{soil}	1000 ft/s	500 ft/s
Shear modulus, G_{soil}	4000 ksf	1000 ksf
Viscous damping, ξ_{soil}	1 %-2 %	20 %

Relation between the shear modulus and the shear wave velocity in the above table is given by the following equation,

$$G_{soil} = w_{soil}\ \beta^2_{soil}\ /g$$

Where, g is the gravitational acceleration.

2.3 Cross Section Properties

Reinforced Concrete Elements

The outlet gate tower consists of six vertical columns with cross section dimension of 1.75x1.75 ft (see drawing No. 273.1 and Fig.1-1). The columns are equally reinforced at the two lower levels designated as section A-A, except at the third level sections B-B and C-C. In longitudinal direction the columns are connected to beams having dimensions of 1.5x1.2 ft at the first, second and third levels, and 3.33x1.75 ft at the top level. In transverse direction the columns are connected to beams with cross-section dimensions of 1.5x1.5 ft at all levels except at the top where they are 2.0x1.75 ft. The four mechanical units for the gate operation are supported by four pairs of beams 2x2.0x1.0 ft. All necessary section dimensions and distribution and size of reinforcements for a typical column section are given in the figure Fig.2-1.

According to ACI Code 318-88, computation of cross-section forces including bending moments, axial, and shear forces is based on the gross section (uncracked concrete section) properties, excluding the reinforcement area. The computation of gross section area, shear area, and the moment of inertia for a typical column section is presented in the Fig. 2-1.

The ACI Code, however, requires that the computation of deformation for a reinforced concrete structure be computed using an effective section property. The effective section property is determined on the basis of a cracked section using the actual section reinforcements and the actual bending moment due to the maximum load. The following equation is used for computation of the effective moment of inertia,

$$I^e = \left[\frac{M^{cr}}{M^a}\right] I^g + \left\{1 - \left[\frac{M^{cr}}{M^a}\right]^3\right\} I^{cr},$$

Where $M^{cr} = \dfrac{f_r I^g}{y_t}$ is the cracking moment and other terms are defined as follows:

f_r = Concrete modulus of
y_t = Distance from the center of the gross section, neglecting the area of tension steel, to the extreme fiber in tension
I^g = Gross section moment of inertia, neglecting the area of steel
M^a = Maximum moment due to applied load.

The I^{cr} is the moment of inertia of the cracked section computed by the straight line theory (WSD):

$$I^{cr} = \frac{bc^3}{3} + nA_s(d-c)^2 + nA'_s(c-d')^2$$

Where $c = kd$, and k takes the following value for a section with tensile and compressive reinforcement,

Gross Section Properties:

$A^g = 1.75 \times 1.75 = 3.0625\ ft^2$, section area;
$A^g_{SH} = 5\ A^g/6 = 2.5521\ ft^2$, shear area;
$I^g_{2,3} = 1.75^4/12 = 0.781576\ ft^4$, moment of inertia;
$I^g_1 = 1.75^4\ 2/3 = 6.651987\ ft^4$, polar moment of inertia.

Effective Moment of Inertia:

$$I^e = \left[\frac{M^{cr}}{M^a}\right] I^g + \left\{1 - \left[\frac{M^{cr}}{M^a}\right]^3\right\} I^{cr}, \text{ where are,}$$

$$M^{cr} = \frac{f_r I^g}{y_t}, \text{ cracking bending moment,}$$

$$I^{cr} = \frac{bc^3}{3} + nA_s(d-c)^2 + nA'_s(c-d')^2,$$

moment of inertia of cracked section,
M^a, maximum bending moment due to applied load.

$M^{cr} = 52.85$ k-ft,
$I^{cr}_{2,3} = 0.151842\ ft^4$,
$M^a_2 = 1554.05$ k-ft,
$M^a_3 = 1436.69$ k-ft,
$I^e_2 = 0.178410$ k-ft,
$I^e_3 = 0.180581$ k-ft.

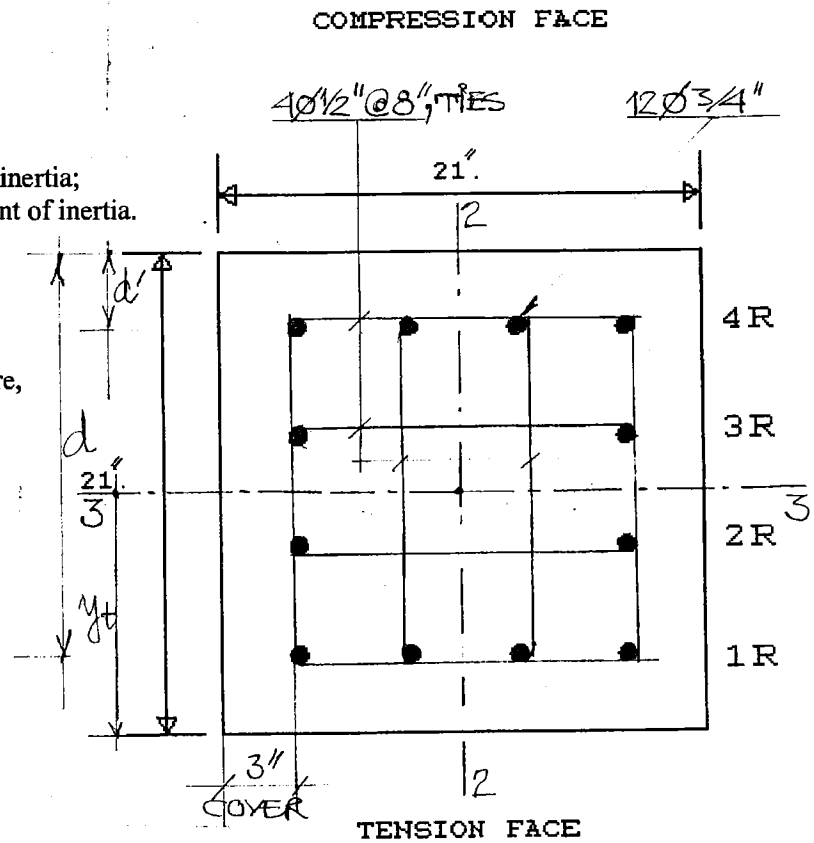

FIG. 2-1 COLUMN CROSS SECTION WITH PROPERTIES

Figure 2-1 BASIC DATA SUMMARY
EATON WASH DAM
OUTLET GATE TOWER: P-M INT. DIA COLUMNS, SEC A-A: 2-2&3-3 axe

$$k = -n(\rho + \rho') + \left[2n\left(\rho + \frac{d'\rho'}{d}\right) + n^2(\rho + \rho')^2 \right]^{1/2}.$$

The above equation for the effective moment of inertia is used if, $1 \le \frac{M^a}{M^{cr}} < 3$. For $\frac{M^a}{M^{cr}} > 3$, $I^e = I^{cr}$ and for $\frac{M^a}{M^{cr}} < 1$, $I^e = I^g$.

The effective section properties for a typical column section are also shown in Fig. 2-1. The effective section properties are computed using the extreme bending moments, M^a, due to the maximum credible earthquake.

Bridge Steel Sections

The foot access bridge is a light steel truss structure. It is connected to the tower by two hinge supports. At the dam crest, the bridge is supported by two bearings permitting rotation and a total translation of 10" along the longitudinal axis of the bridge (see drawing 271.1). A summary of all steel sections used in the bridge structure with the section area A_s, weight per unit length w_s, element length l_s, and the number of elements n are given in the following table.

Member Name	Section Size	A_s (in^2)	w_s (lb/ft)	l_s (ft)	n
Upper chord	2 L 5"x3.5"x1/2"	8.00	27.30	7.0	28
Lower chord	2 L 4"x3"x1/2"	6.50	22.20	7.0	28
Diagonals	2 L 3"x2.5"x3/8"	3.84	13.20	9.9	32
Verticals	2 L 3.5"x3"x3/8"	4.60	15.70	7/0	30
Floor beams	8"W 17	5.26	17.00	7.1	15
Horizontal Diagonals	2 L 4"x3"x3/8"	4.96	17.00	15.69	6
	2 L 3"x2.5"x3/8"	3.84	13.20	9.96	2
Lateral Stiffners	L 4"x3"x3/8"	2.48	8.50	31.0	8

These data are used for computation of the bridge weight and mass, which will then be included in the static and dynamic analyses of the tower.

2.4 Structural Modeling of Tower, Substructure, and Foundation Soil

Tower and Substructure

The tower structure has symmetric stiffness in both transverse and longitudinal directions. However, static loading due to weight of the mechanical equipment, floor slabs and foot bridge, and the resulting mass distributions are asymmetric about the longitudinal axis of the tower. Consequently the tower was modeled as a 3D structure, in order to permit for torsional response due to the irregular mass distribution, as well as the application of three-component earthquake input.

The 3D model is generated using the beam element from the element library of the structural analysis program SAP90. All columns, longitudinal and transverse beams are included in the model. At the tower top, each in-pair beam is modeled as one beam with equivalent stiffness. The floor systems are considered to be flexible, thus allowing for proper loading of the beams and columns and their three-dimensional deformation. The gate house at the tower top is not explicitly modeled, but its weight and mass are accounted for in the model.

The stiffness of access bridge is also omitted from the model because it provides very little resistance, but its weight and mass are properly attached to the tower. At the final phase of this analysis, depending on the maximum tower displacement during earthquake, an estimate of the bridge interaction with the tower will be given and a possibility of the bridge stiffness inclusion into the tower model will be considered.

Interaction of the tower with the outlet substructure is accomplished by modeling of the substructure as a rigid block. The substructure block is represented by rigid beams and columns with appropriate lengths and masses. Considering its stiff and massive walls and slabs, the assumption of rigid substructure is justified.

The tower model developed as a 3D-frame structure is shown in Fig.2-2. The element numbers and local axes orientation are given in Figs. 2-2a and 2-2b, respectively. The stiffness for each element is computed according to the linear beam theory taking into account the section properties, rigid offsets, element lengths, modulus of elasticity, etc. Deformation due to shear is also considered, according to the section shear area and shear modulus used as the input.

Foundation – Static and Dynamic Soil Stiffness

The tower interaction with foundation soil is accounted for by placing elastic spring elements under the rigid substructure. The spring stiffnesses are determined from the dynamic soil stiffness of the equivalent rigid rectangular foundation on visco-elastic half space. The Wong and Luco's tables of impedance functions are used to compute dynamic stiffness for the soil beneath the tower (Wong and Luco, 1978).

First, the static soil stiffness needs to be computed. From the Wong and Luco's tables for B/C=31/22=1.41, ν=0.35, ξ=0.05, the static stiffness coefficients (at zero frequency) are read: K_{11}=4.888, K_{22}=5.008 and K_{33}=6.246. The stiffness coefficient being known, the static soil stiffnesses for X (longitudinal), Y (transverse) and Z (vertical) directions are computed as follows:

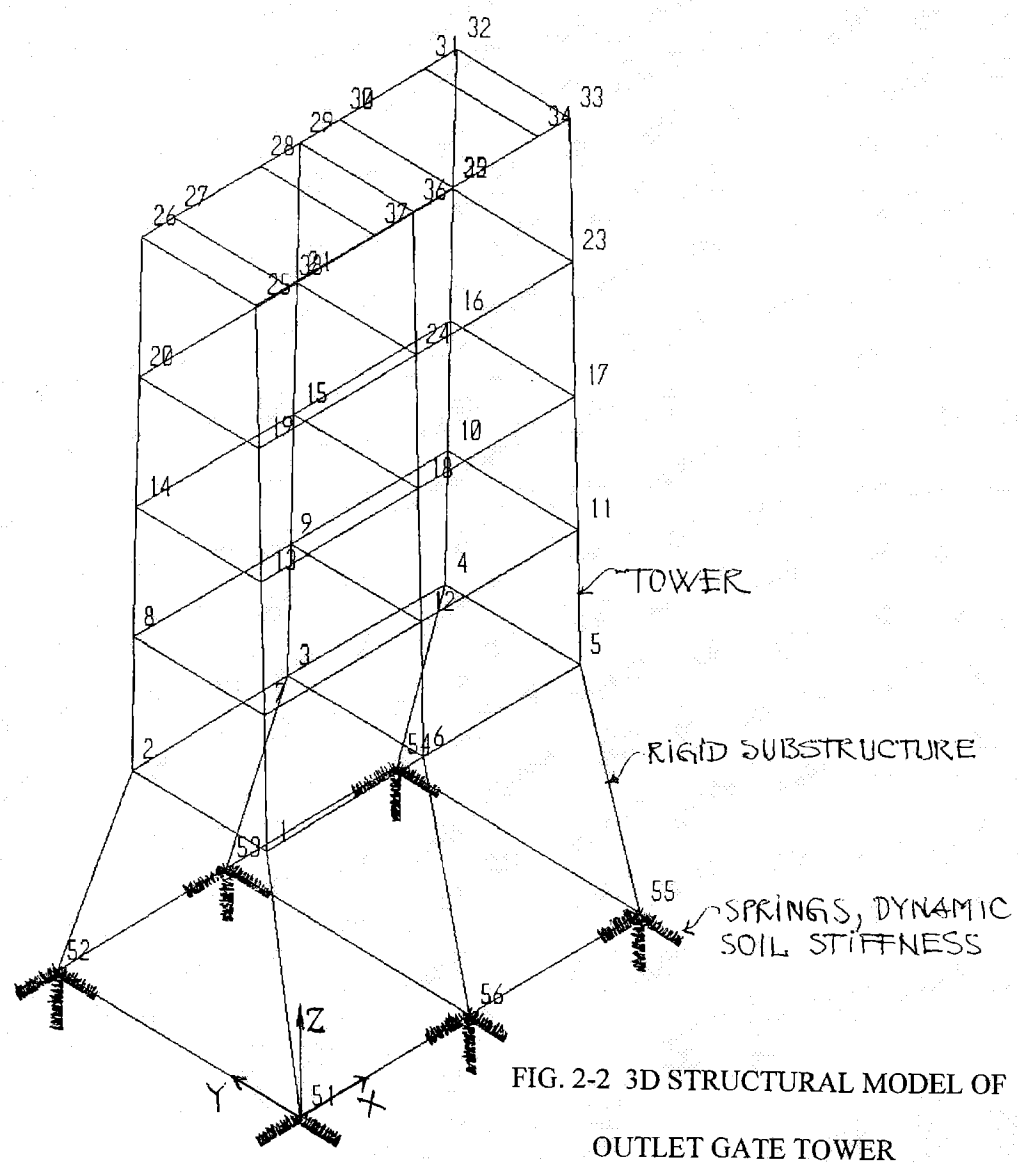

FIG. 2-2 3D STRUCTURAL MODEL OF OUTLET GATE TOWER

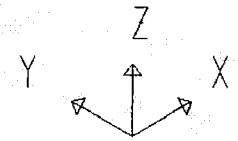

TOWER 1

UNDEFORMED SHAPE

OPTIONS

JOINT IDS
RESTRAINTS
WIRE FRAME

SAP90

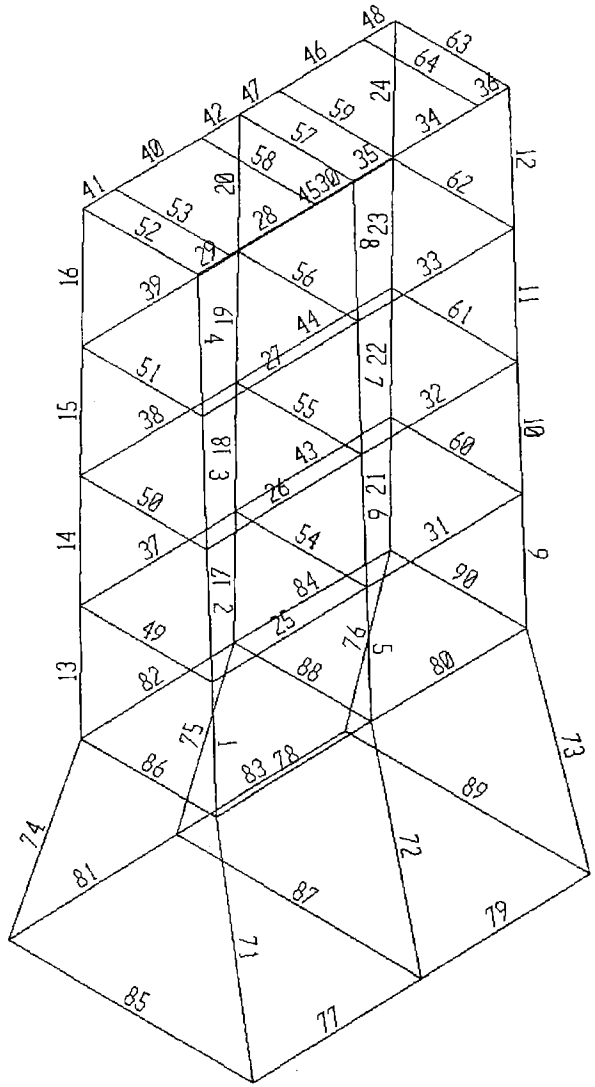

Z
Y X

TOWER I

UNDEFORMED SHAPE

Fig. 2-2a

OPTIONS

RESTRAINTS
ELEMENT IDS
WIRE FRAME

SAP90

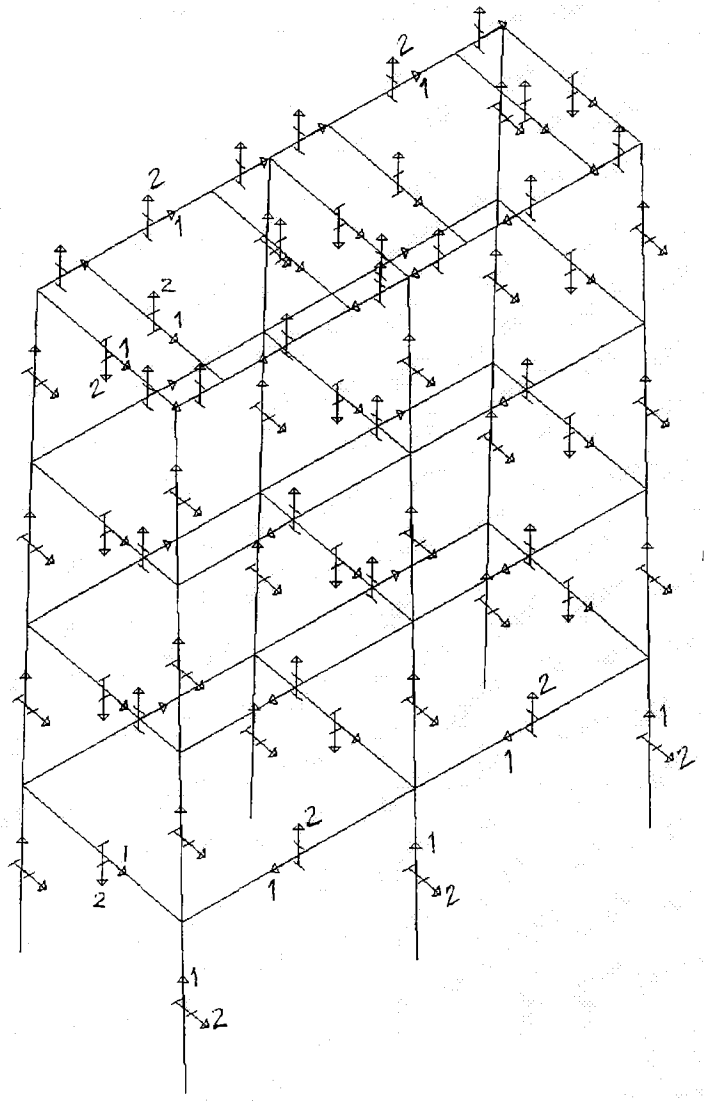

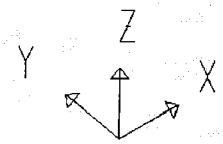

EWD_RBES

UNDEFORMED SHAPE

Fig. 2-2b

OPTIONS

LOCAL AXES
WIRE FRAME

SAP90

$K_X^{static} = G_{soil}\ L\ K_{11} = 4000x14.738x4.888 = 288000$ kips/ft;
$K_Y^{static} = G_{soil}\ L\ K_{22} = 4000x14.738x5.008 = 295000$ kips/ft;
$K_Z^{static} = G_{soil}\ L\ K_{33} = 4000x14.738x6.246 = 368000$ kips/ft.

Where, $L=(31.0x22.0/\pi)^{1/2}=14.74$ ft.

Next the soil static stiffness is used to obtain the tower mode shapes and. The dynamic soil stiffness is then computed for the tower lowest frequencies, $\omega_1 = 11.326$, $\omega_2 = 11.994$, and $\omega_3 = 72.354$ rad/s, corresponding to X, Y, and Z directions (see Section 3.2: Fig. 3-1, Fig.3-2 and Fig.3-3, and Table 3-2). For the high strain shear wave velocity of $\beta_{soil} = 500$ ft/s, and the soil shear modulus of $G_{soil}=1000$ kips/ft^2, the corresponding dimensionless frequencies for each direction are given by,

$A_o(T_X)=11.326\ L / 500 = 0.334$,
$A_o(T_Y)=11.994\ L / 500 = 0.354$, and
$A_o(T_Z)=72.354\ L / 500 = 2.133$,

From the tables of impedance functions for B/C=31/22=1.41, $\nu=0.35$, $\xi=0.05$ (not available for a higher damping) and the above values of dimensionless frequencies A_o, the soil dynamic stiffness coefficients are found. They are: $K_{11}=5.029$, $K_{22}=5.183$ and $K_{33}=13.143$, which result in the soil dynamic stiffness for three orthogonal directions as follows:

$K_X^{dynamic} = G_{soil}\ L\ K_{11} = 1000x14.738x5.029 = 74117$ kips/ft;
$K_Y^{dynamic} = G_{soil}\ L\ K_{22} = 1000x14.738x5.183 = 76387$ kips/ft;
$K_Z^{dynamic} = G_{soil}\ L\ K_{33} = 1000x14.738x13.143 = 193697$ kips/ft.

The above two sets of values are the total soil static stiffness and total soil dynamic stiffness acting beneath the entire rigid substructure. They are therefore distributed according to the contributory area in order to apply them at six nodal points (Fig.2-2).

2.5 Structural Loads

Static Loads

The static loads include the self-weight of tower, gate house, bridge and of mechanical equipment. The self-weight of beams and columns are automatically computed by the computer program from the cross-section area and unit weight of the element. The self-weight of floor slabs are applied to longitudinal and transverse beams as distributed loads. Their values are the following:

The estimated weight of each mechanical equipment (W=1.5 kips) is applied as a concentrated load at 2.3 ft from the upstream end of each pair of beams supporting the equipment.

The total self-weight of the equipment house is about 190.92 kips, which is applied as concentrated load at the top level as shown in Fig. 2-3.

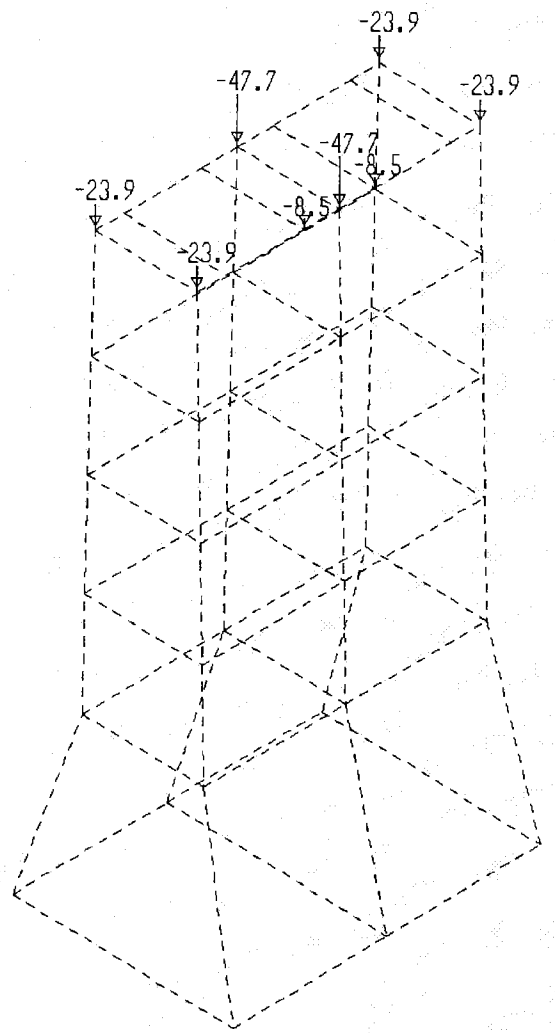

FIG. 2-3 TOWER DEAD LOAD – CONCENTRATED FORCES

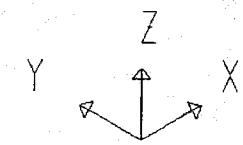

EWDRBRF1

JOINT
LOADS

LOAD 1

MINIMA
P -.4773E+02
MAXIMA
P -.8540E+01

SAP90

The self-weight of bridge is 22.96 kips and its supports at the tower weigh 5.6 kips. Total supports weight and half of the bridge weight are applied as two concentrated loads at the bridge support locations as shown in Fig. 2-3.

Mass of Structure, Mechanical Equipment and Foot Bridge

The mass of beams and columns are computed automatically by the computer program and they are applied at the frame joints. The masses of floor slabs are computed according to their self-weight discussed above and are lumped at the corresponding frame joints. The mass of mechanical equipment is also lumped at the nearby joints. Similarly, one a half of the bridge mass is lumped at the bridge supports at the tower top. The mass of substructure is lumped at the corresponding joints.

Added Mass of Reservoir Water

Hydrodynamic force generated by pressure wave propagation in the reservoir water during an earthquake is included in the model by an equivalent added-mass of water. The bottom of reservoir is assumed at El. 843 ft and the normal water level at EL.887.5 ft, making a total water depth of h = 44.5 ft. Radius of subscribe cylinder about a column is, R=1.24 ft.. Ratio, h/R=36, which gives added mass coefficient C_e=0.8 (Zangar,). The total added mass for one column, which extends from El.843 ft, becomes,

$$m_w = C_e R^2 \pi h \gamma_w / g = 0.8 \times 1.24^2 \times 3.14 \times 44.5 \times 0.062426 / 32.174 = 0.333566 \text{ kip-s}^2/\text{ft}.$$

The added-mass of water at any level will be $m_{w,level} = C_3\, m_w$, where the coefficient C_3 is given as function of water depth at desired level (Zangar,). Thus, at the 2nd and 1st tower levels, the added water masses are as follows:

$$m_{w,2} = 0.184 \times 0.333566 = 0.061376 \text{ kip-s}^2/\text{ft}, \text{ and}$$

$$m_{w,1} = (0.413 - 0.184)\ 0.333566 = 0.076387 \text{ kip-s}^2/\text{ft}.$$

Those masses are lumped at the corresponding frame joints.

Acceleration Response Spectra

The Eaton Wash Dam is in the vicinity of the Sierra Madre Fault with the closest distance of about 0.7 km. The longitudinal axis of tower makes an angle of about $\alpha = 38^\circ$ with the direction normal to the fault line. The seismological/geological investigation has postulated a maximum credible earthquake of magnitude M7.3 for the Sierra Madre Fault. The corresponding three-component acceleration response spectra at a distance of R = 2300 ft, have been generated by Geomatrix Consultants, Inc. The average horizontal and vertical, 84th percentile acceleration response spectra are shown in Fig. 2-4 and Fig.2-5, respectively.

More details on the fault, dam position, and the acceleration response spectra are given by Geomatrix Consultants. Distinction was made between the fault normal and fault parallel components of the ground motions. Response spectra were developed using various attenuation relationships and were averaged to obtain a mean spectra for the project.

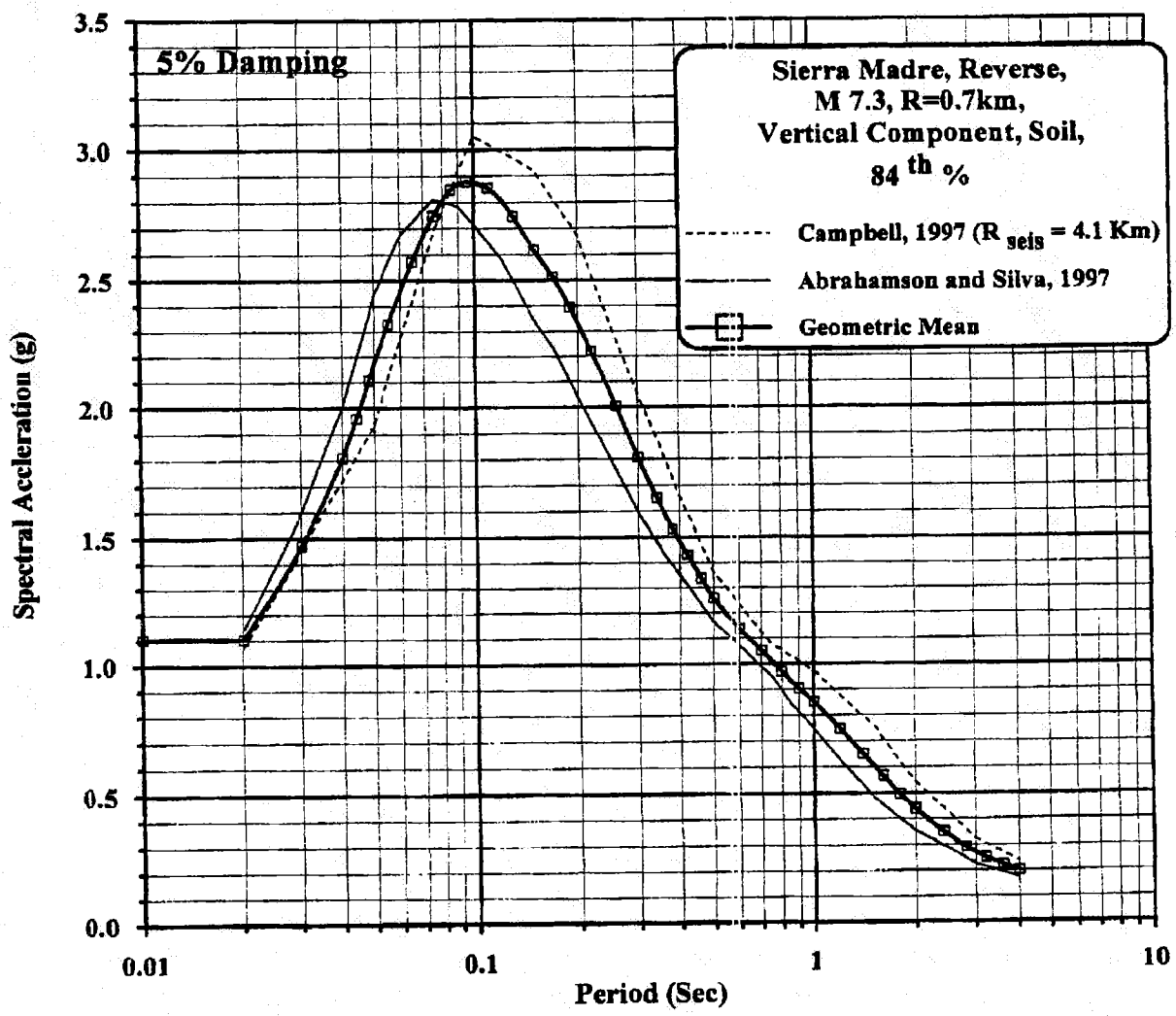

FIG. 2-4 **84 th percentile vertical acceleration response spectra at Eaton Wash Dam from maximum earthquake on Sierra Madrea Fault.**

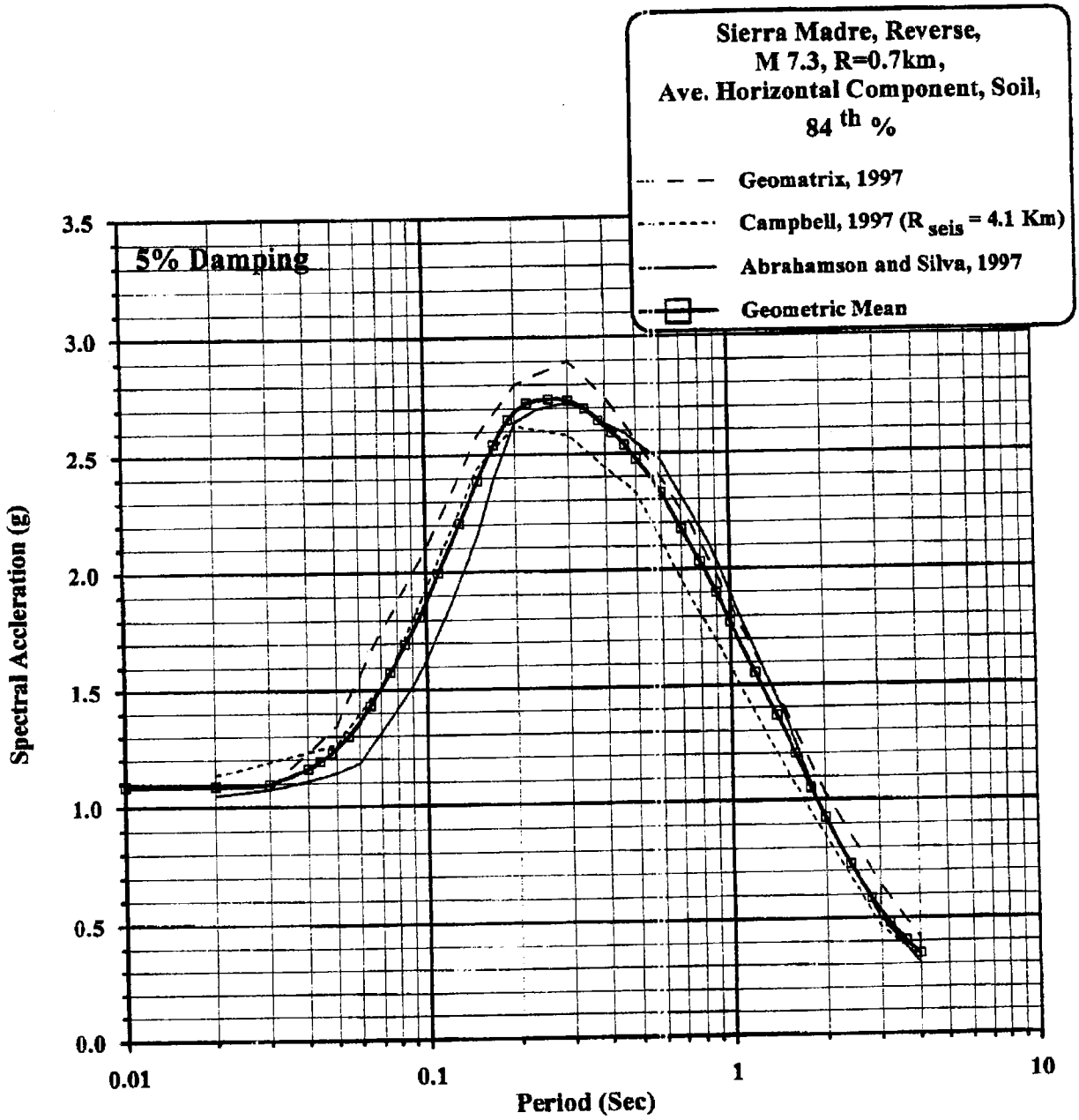

FIG. 2-5 **84th percentile horizontal acceleration response spectra at Eaton Wash Dam from maximum earthquake on Sierra Madrea Fault.**

Load Combinations

There are two loading conditions that affect the outlet gate tower. The first is the sustained dead load (D) and another is the transient earthquake load (E). The dead load condition includes all static loads discussed previously. In the strength method of design and analysis, the dead load is multiplied by a load factor of 1.4 to obtain the required strength (U). This load factor is decreased to 1.05, if dead load is combined with live and earthquake loads, or to 0.90, if dead load is combined only with earthquake load.

According to the ACI Code, earthquake load is multiplied by a load factor of 1.40 or 1.43, depending on whether a live load is considered or not. For Eaton Wash Outlet Gate, no live load is considered because it is either negligible or nonexistent. Therefore, following the ACI Code, the required strength of the tower should be computed using the following expression,

$$U=0.90D+1.43E$$

However, since a detailed seismological/geological investigation was carried out to determine a site-specific ground motion, there is no need to use a load factor for the earthquake loading. Therefore, the required strength is simply computed with load factors of unity applied both to the dead and seismic loads

$$U=1.0D+1.0E.$$

3. EARTHQUAKE RESPONSE OF TOWER

3.1 General Consideration

Located only 0.7 km from the dam site, the Sierra Madre Fault subjects the tower to the most demanding earthquake loading condition. In Phase-I work, linear earthquake response of the tower is evaluated using the response-spectrum mode-superposition method of analysis. The three-component earthquake input in the form of acceleration response spectra is simultaneously applied along three orthogonal axes of the tower. The 3D model discussed previously, includes torsional response as well as interaction with the outlet substructure and the foundation soil. Envelopes of displacements, reactions, and cross-section forces are computed for the combined static and earthquake loads. The results are shown in the form of diagrams and tables.

3.2 Dynamic Characteristics of Tower

Dynamic characteristics of the outlet gate tower are given by its vibration frequencies and mode shapes. The vibration frequencies are generated for three foundation cases: 1) rigid, 2) visco-elastic static soil stiffness, and 3) visco-elastic dynamic soil stiffness. The subspace iteration method available in the computer program SAP90 is used for evaluation of the vibration properties of the tower.

The element stiffnesses are computed using the gross section properties, as described in Section 2.3. The structural masses are those described in Section 2.5 and are applied at appropriate joints. The first fifteen vibration frequencies for three different foundation cases are summarized in Tables 3-1 to 3-3.

Table 3-1 Tower frequencies with rigid foundation

Mode No.	Circular Frequency (rad/sec)	Frequency (cycles/sec)	Period (sec)
1	12.240	1.948	0.513
2	13.055	2.078	0.481
3	18.974	3.020	0.331
4	56.423	8.980	0.111
5	58.072	9.242	0.108
6	69.195	11.013	0.091
7	80.916	12.878	0.078
8	95.997	15.278	0.065
9	124.226	19.771	0.051
10	125.679	20.002	0.050
11	128.105	20.389	0.049
12	131.220	20.884	0.048
13	138.678	22.071	0.045
14	142.186	22.630	0.044
15	143.283	22.804	0.044

Table 3-2 Tower frequencies with low strain visco-elastic foundation soil properties

Mode No.	Circular Frequency (rad/sec)	Frequency (cycles/sec)	Period (sec)
1	11.327	1.803	0.555
2	11.994	1.909	0.524
3	18.751	2.984	0.335
6	62.745	9.986	0.100
4	50.629	8.058	0.124
5	51.845	8.251	0.121
7	64.548	10.273	0.097
8	67.608	10.760	0.093
9	72.354	11.515	0.087
10	80.997	12.891	0.078
11	87.797	13.973	0.072
12	94.832	15.093	0.066
13	96.895	15.421	0.065
14	105.870	16.850	0.059
15	124.929	19.883	0.050

Table 3-3 Tower frequencies with large strain visco-elastic foundation soil properties

Mode No.	Circular Frequency (rad/sec)	Frequency (cycles/sec)	Period (sec)
1	10.528	1.676	0.597
2	11.089	1.765	0.567
3	18.372	2.924	0.342
4	35.723	5.685	0.176
5	36.918	5.876	0.170
6	45.042	7.169	0.139
7	53.918	8.581	0.117
8	57.967	9.226	0.108
9	58.516	9.313	0.107
10	60.289	9.595	0.104
11	67.943	10.813	0.092
12	70.809	11.270	0.089
13	80.970	12.887	0.078
14	96.206	15.312	0.065
15	124.858	19.872	0.050

The tower mode shapes for the fundamental frequencies in each direction are presented in Figs. 3-1, 3-2 and 3-3. These correspond to the case with low-strain visco-elastic soil properties. The same mode shapes for the case with large-strain visco-elastic dynamic soil stiffness are given in Figs. 3-3a, 3-3b, and 3-3c.

The participating modal masses shown in Table 3-4 indicate the level at which each mode participates in the overall response of the tower. It can be seen that the first eleven modes account for more then 99% of the total mass in all three directions.

Table 3-4 Tower participating mass per mode of vibration

Mode No.	x-dir	y-dir	z-dir	x-sum	y-sum	z-sum
1	34.244	.000	.000	34.244	.000	.000
2	.000	34.838	.001	34.244	34.838	.001
3	.002	.000	.000	34.246	34.838	.001
4	52.076	.000	.000	86.322	34.838	.001
5	.000	55.579	.034	86.322	90.417	.035
6	.069	.000	.000	86.392	90.417	.035
7	.000	.097	98.811	86.392	90.514	98.846
8	13.129	.000	.000	99.520	90.514	98.846
9	.000	2.732	.002	99.520	93.246	98.848
10	.427	.000	.000	99.947	93.246	98.848
11	.000	6.724	.386	99.947	99.970	99.235
12	.000	.000	.000	99.948	99.970	99.235
13	.000	.000	.000	99.948	99.970	99.235
14	.000	.000	.000	99.948	99.970	99.235
15	.000	.000	.000	99.948	99.970	99.235

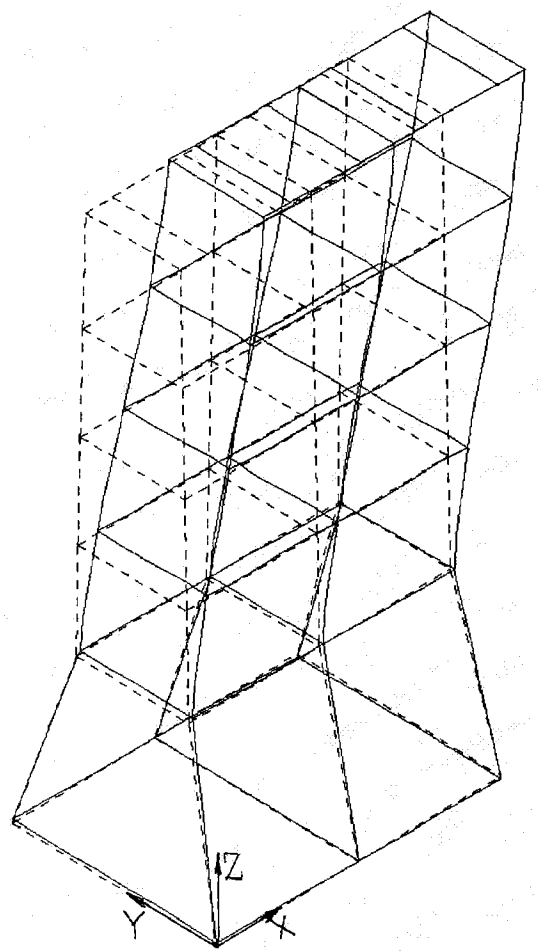

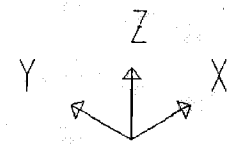

EWD_RBES

MODE
SHAPE

MODE 1

$\omega_1 = 11.326$ RAD/S

MINIMA
X .0000E+00
Y -.1577E-02
Z -.1341E-01
MAXIMA
X .2819E+00
Y .1576E-02
Z .1341E-01

SAP90

FIG. 3-1 FUNDAMENTAL MODE SHAPE IN X-DIRECTION WITH VISCO-ELASTIC SOIL STIFFNESS AT LOW SOIL STRAIN

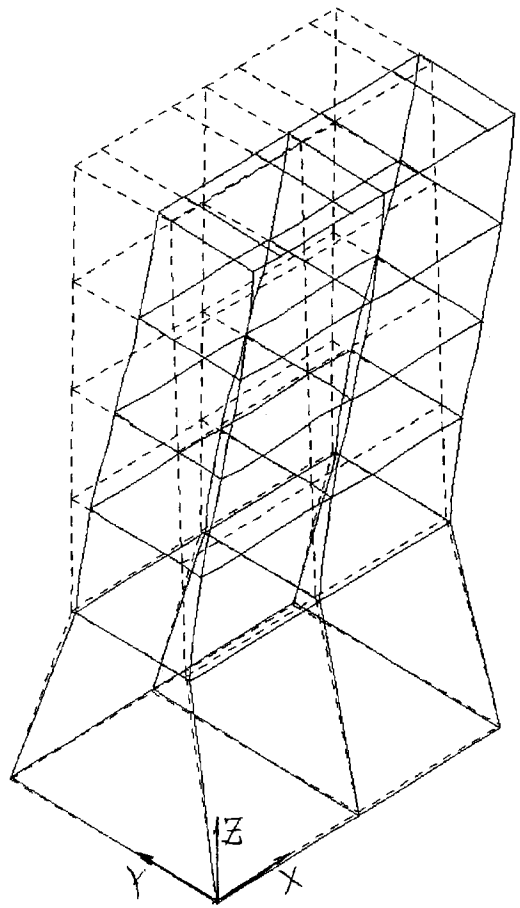

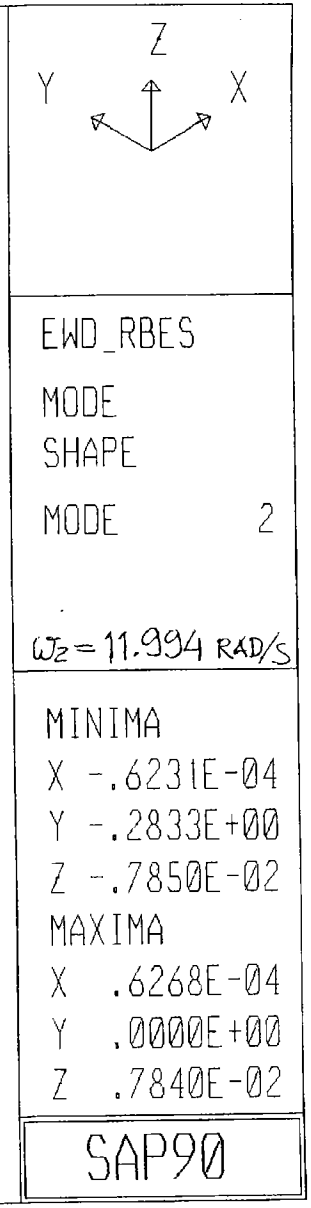

FIG. 3-2 FUNDAMENTAL MODE SHAPE IN Y-DIRECTION WITH VISCO-ELASTIC SOIL STIFFNESS AT LOW SOIL STRAIN

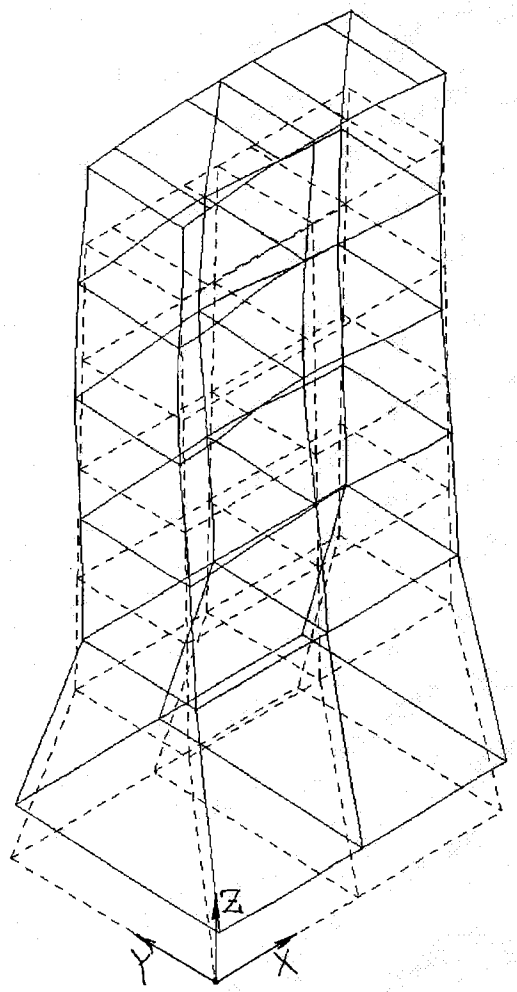

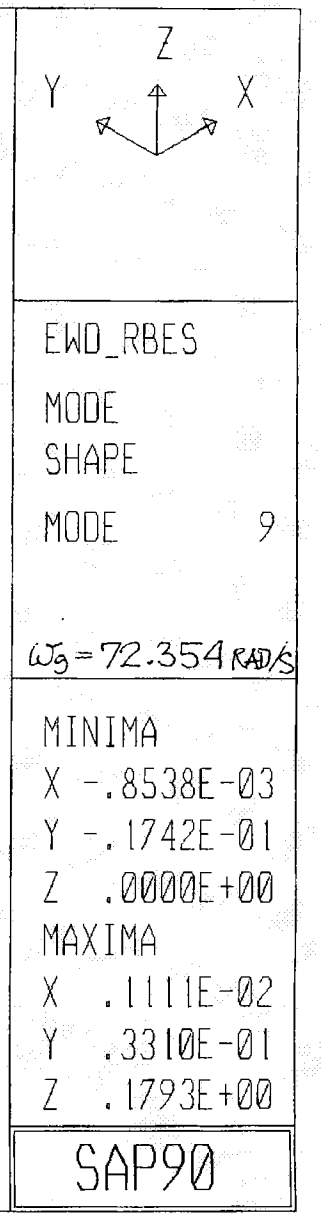

FIG. 3-3 FUNDAMENTAL MODE SHAPE IN Z-DIRECTION WITH VISCO-ELASTIC SOIL STIFFNESS AT LOW SOIL STRAIN

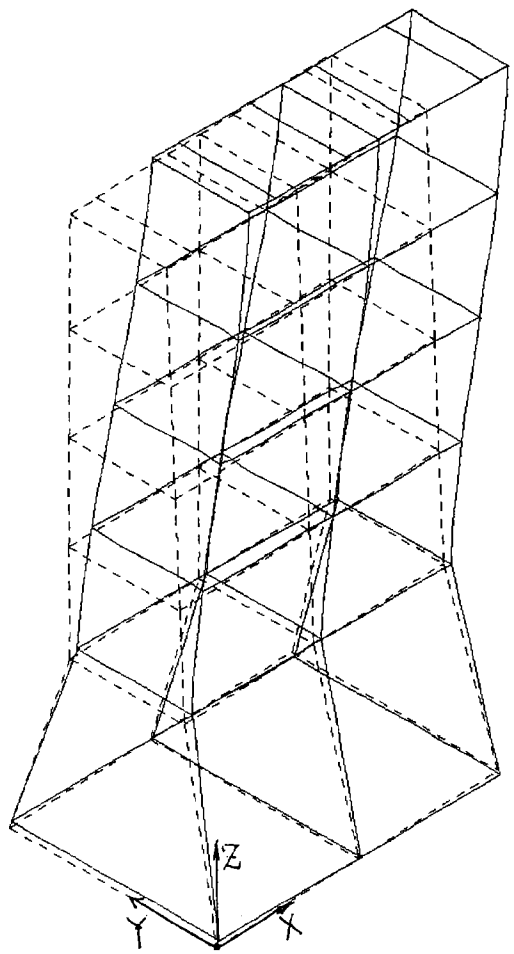

Fig 3-3a

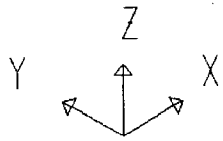

EWD_RBES

MODE
SHAPE

MODE 1

$T_1 = 0.597s$

MINIMA
X .0000E+00
Y -.1554E-02
Z -.1912E-01
MAXIMA
X .2780E+00
Y .1551E-02
Z .1912E-01

SAP90

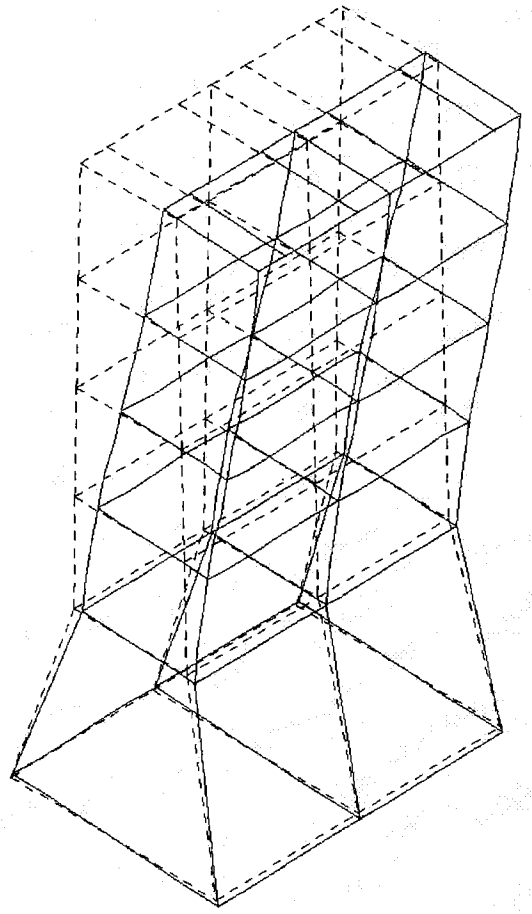

Fig. 3-3b

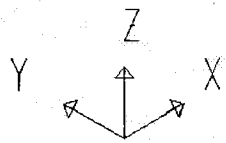

EWD_RBES

MODE
SHAPE

MODE 2

T_2=0.567s

MINIMA
X -.5224E-04
Y -.2790E+00
Z -.1300E-01
MAXIMA
X .5298E-04
Y .0000E+00
Z .1297E-01

SAP90

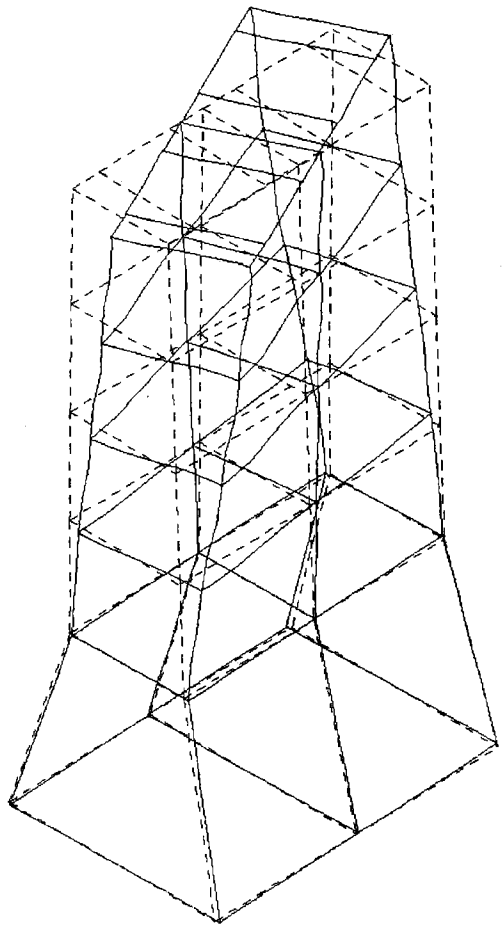

Fig. 3-3c

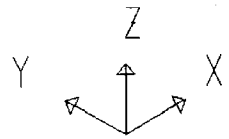

EWD_RBES

MODE
SHAPE

MODE 3

$T_3 = 0.342$ s

MINIMA
X -.1242E+00
Y -.3357E+00
Z -.3025E-02
MAXIMA
X .1181E+00
Y .3357E+00
Z .3024E-02

SAP90

3.3 Nodal displacements and cross-section forces

Two loading combinations of: dead load only, and dead load plus earthquake load are considered. All computations for displacements and cross-section forces are done by SAP90. The gross section properties are used in computation of both displacements and forces. The results in the form of diagrams and tables are shown separately for each loading combination.

Static-Dead Load

Nodal displacements due to static dead loads are shown in Fig. 3-4 and the corresponding section forces are presented in Figs. 3-5 to 3-9.

Dead Load plus Earthquake Load

The earthquake response of the tower was computed by subjecting the 3D model to three-component acceleration response spectra. One horizontal component of the response spectra was applied at 38° angle from the longitudinal axis of the tower (fault-normal component), and another perpendicular to the first one. The dynamic soil stiffness at large soil strain was utilized in the computation. All fifteen modes of vibration were considered in the tower response.

Dynamic section forces were computed simultaneously due to all three components of spectral accclerations and were combined by the SRSS (square root of the sum of the squares). The modal responses were also combined using the SRSS technique. The envelopes of maximum and minimum cross-section forces computed in this manner are presented in Fig.3-10 through Fig.3-14. The extreme bending moment, shear force, and axial force, respectively, reached a value of M = 1754 k-ft, V = 328 kips, P = 1445 kips. The maximum displacements based on the gross section properties are: U_x= 10.6", U_y= 9.7" and U_z= 0.9".

Displacement with Reduced Tower Stiffness

A more accurate estimate of the tower displacement under a damaging earthquake can be estimated using the effective moment of inertia as discussed in Section 2.3. In computation of the effective moment of inertia the extreme bending moments are used which cause the most extensive section cracking.

The results given in Table 3-5 show that the maximum displacements exceeds 20" in the longitudinal direction, and 18" in the transverse direction. These values are two times larger than those obtained with the gross section properties.

Table 3-5 Joint displacements due to static and earthquake loads with cross-section effective moment of intertia

	TRANSLATION "U"			ROTATIONS "R"		
JOINT	U(X)	U(Y)	U(Z)	R(X)	R(Y)	R(Z)
1	.083116	.078517	.055897	.002857	.003107	.000127
2	.081980	.078516	.053403	.002856	.003104	.000142
3	.081972	.078444	.032075	.002818	.003056	.000140
4	.081980	.078519	.053415	.002856	.003104	.000142
5	.083116	.078521	.055909	.002857	.003107	.000127
6	.083118	.078446	.035785	.002819	.003062	.000127
7	.448207	.387076	.059377	.035296	.044554	.000609
8	.448174	.387131	.057743	.035300	.044535	.000582
9	.448442	.388624	.033980	.035374	.033962	.000611
10	.448174	.387131	.057750	.035300	.044535	.000582
11	.448207	.387077	.059401	.035295	.044554	.000609
12	.448484	.388600	.037710	.035371	.033984	.000440
13	.985194	.841857	.061102	.034474	.045079	.000497
14	.983884	.841857	.059401	.034471	.045044	.000723
15	.983754	.846185	.034521	.034463	.035456	.000674
16	.983884	.841856	.059412	.034471	.045044	.000721
17	.985194	.841856	.061124	.034474	.045079	.000495
18	.985077	.846185	.038127	.034464	.035489	.000361
19	1.448862	1.237823	.062475	.028964	.035380	.000364
20	1.446849	1.237840	.060773	.028965	.035322	.000672
21	1.446663	1.240315	.035672	.028918	.028945	.000652
22	1.446849	1.237852	.060788	.028965	.035322	.000671
23	1.448862	1.237835	.062492	.028964	.035380	.000364
24	1.448663	1.240281	.039113	.028918	.028993	.000296
25	1.714719	1.521616	.063861	.013455	.007939	.000466
26	1.711098	1.521620	.062190	.013455	.007886	.000454
27	1.711121	1.522300	.049900	.001976	.005126	.000470
28	1.711115	1.523760	.039205	.002138	.002685	.000439
29	1.711081	1.523827	.037569	.012929	.003541	.000423
30	1.711115	1.523762	.039227	.002138	.002685	.000439
31	1.711121	1.522308	.049937	.001977	.005127	.000469
32	1.711098	1.521630	.062196	.013454	.007887	.000453
33	1.714718	1.521626	.063887	.013454	.007940	.000465
34	1.714747	1.522304	.052173	.001977	.005160	.000475
35	1.714774	1.523796	.042659	.002138	.002685	.000438
36	1.714737	1.523848	.040940	.012932	.003558	.000425
37	1.714775	1.523794	.042648	.002138	.002685	.000439
38	1.714747	1.522296	.052137	.001976	.005160	.000476
39	.000000	.000000	.000000	.000000	.000000	.000000
40	.000000	.000000	.000000	.000000	.000000	.000000
51	.034850	.035010	.064236	.002833	.003090	.000126
52	.032560	.035014	.062116	.002832	.003077	.000148
53	.032557	.034886	.040942	.002816	.003047	.000146
54	.032560	.035015	.062129	.002832	.003077	.000148
55	.034850	.035011	.064246	.002833	.003090	.000126
56	.034848	.034881	.043771	.002816	.003064	.000130

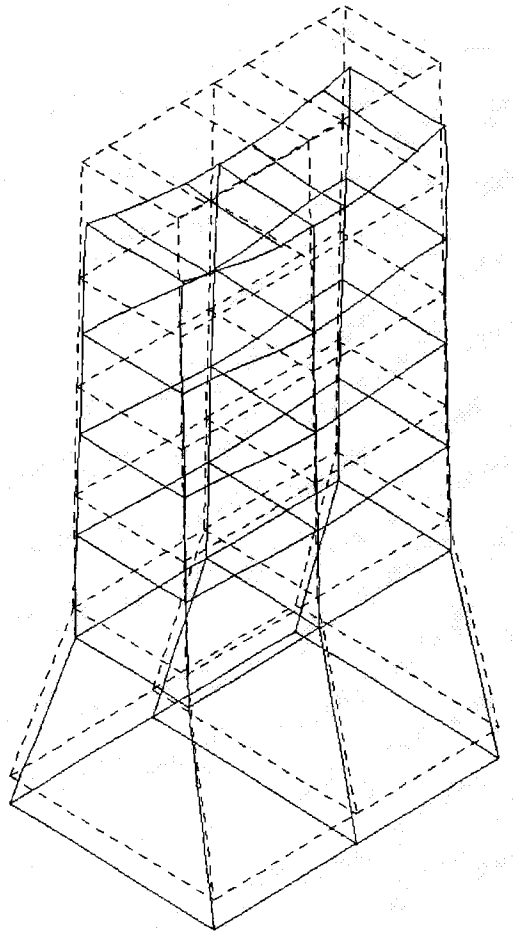

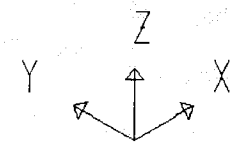

EWD_RBES

DEFORMED SHAPE DUE TO LOAD -DEAD 1

MINIMA
X -.3482E-04
Y -.3173E-03
Z -.4316E-02
MAXIMA
X .3482E-04
Y .2062E-05
Z .0000E+00

SAP90

FIG. 3-4 TOWER DEFORMATION DUE TO DEAD LOAD

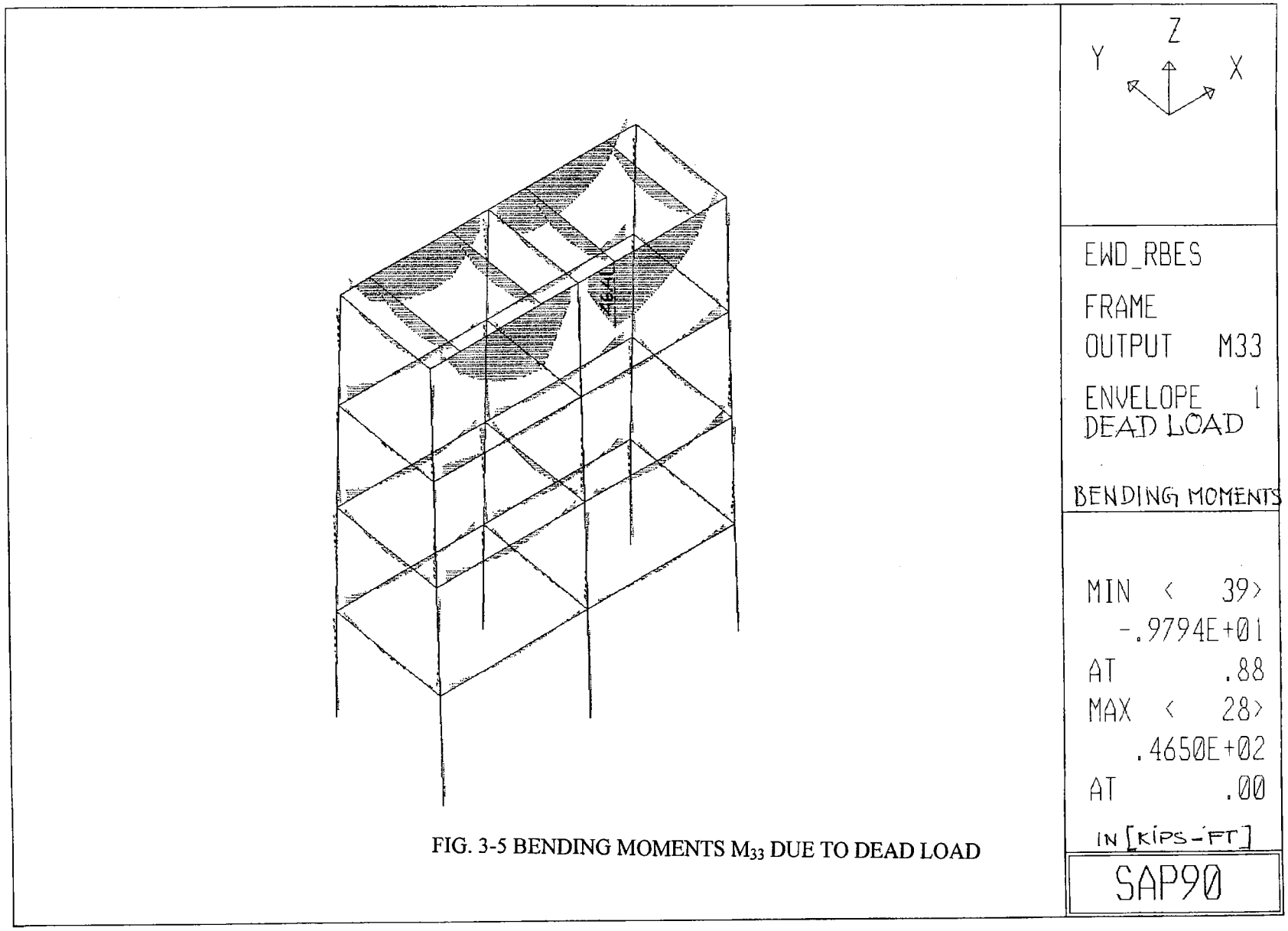

FIG. 3-5 BENDING MOMENTS M_{33} DUE TO DEAD LOAD

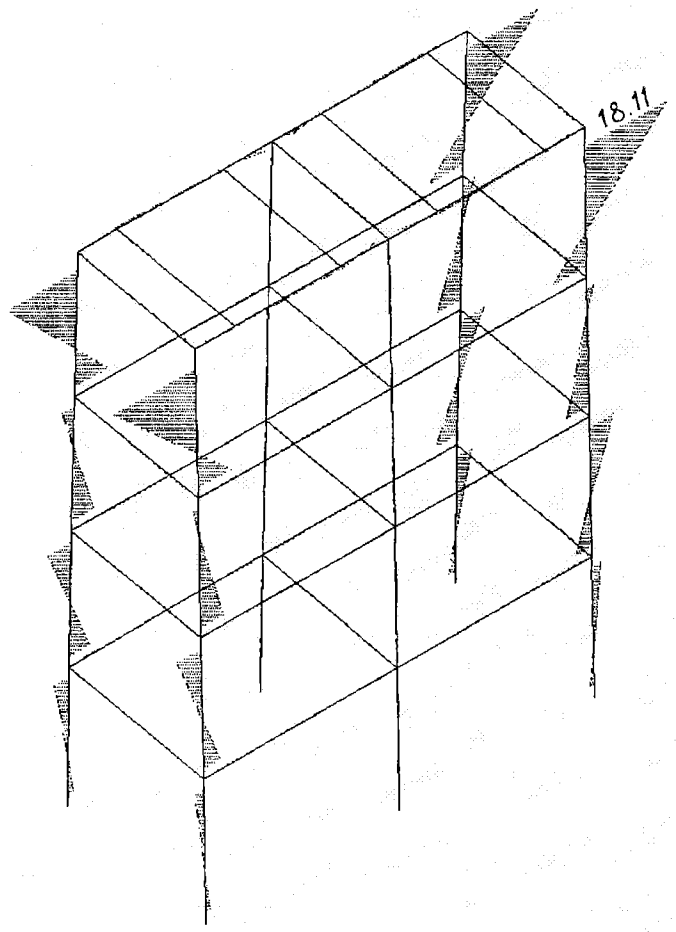

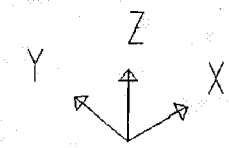

EWD_RBES

FRAME

OUTPUT M22

ENVELOPE 1

DEAD LOAD

BENDING MOMEN:

MIN < 12>

-.1811E+02

AT 9.33

MAX < 4>

.1811E+02

AT 9.33

IN [KIPS-FT]

SAP90

FIG. 3-6 BENDING MOMENTS M_{22} DUE TO DEAD LOAD

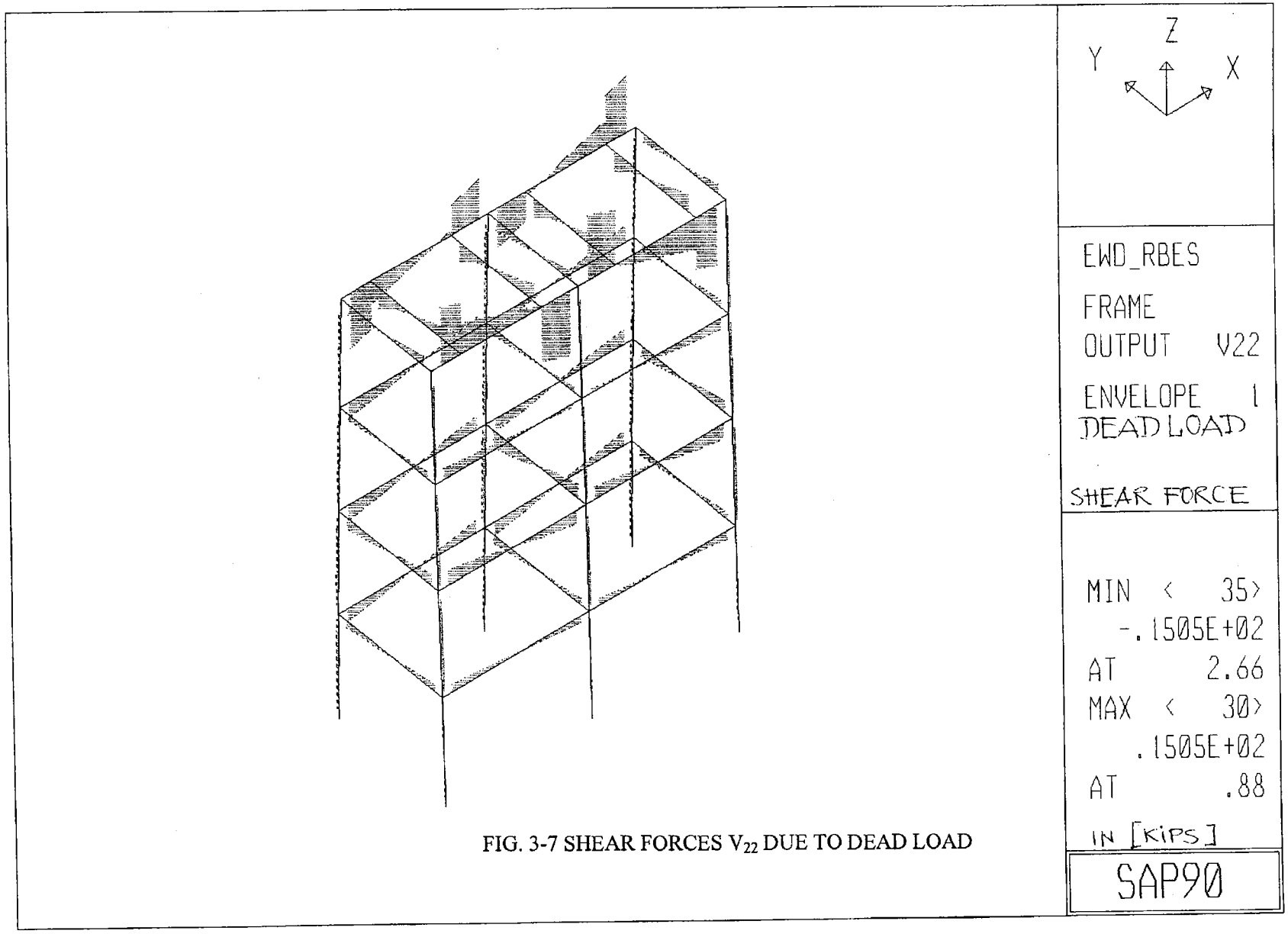

FIG. 3-7 SHEAR FORCES V_{22} DUE TO DEAD LOAD

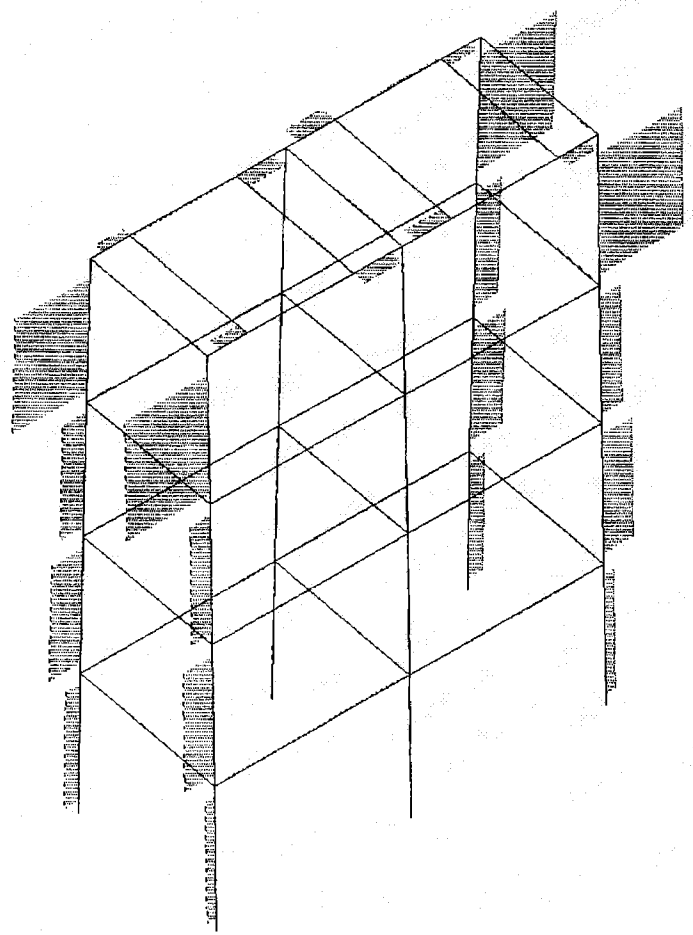

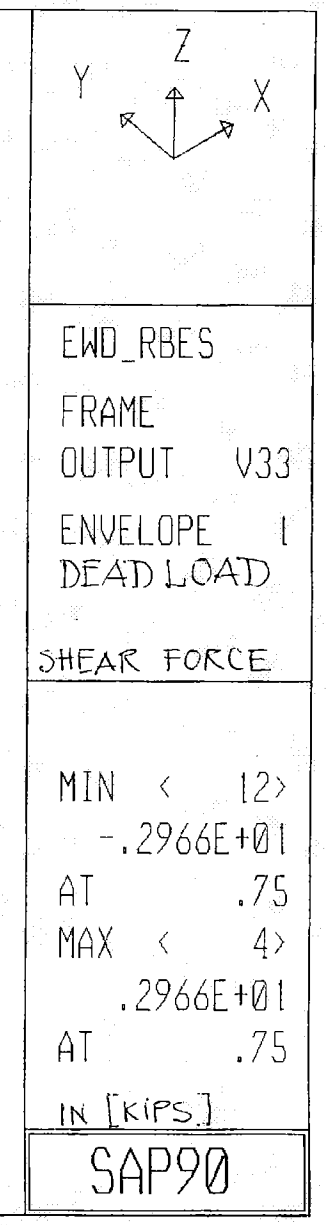

FIG. 3-8 SHEAR FORCES V_{33} DUE TO DEAD LOAD

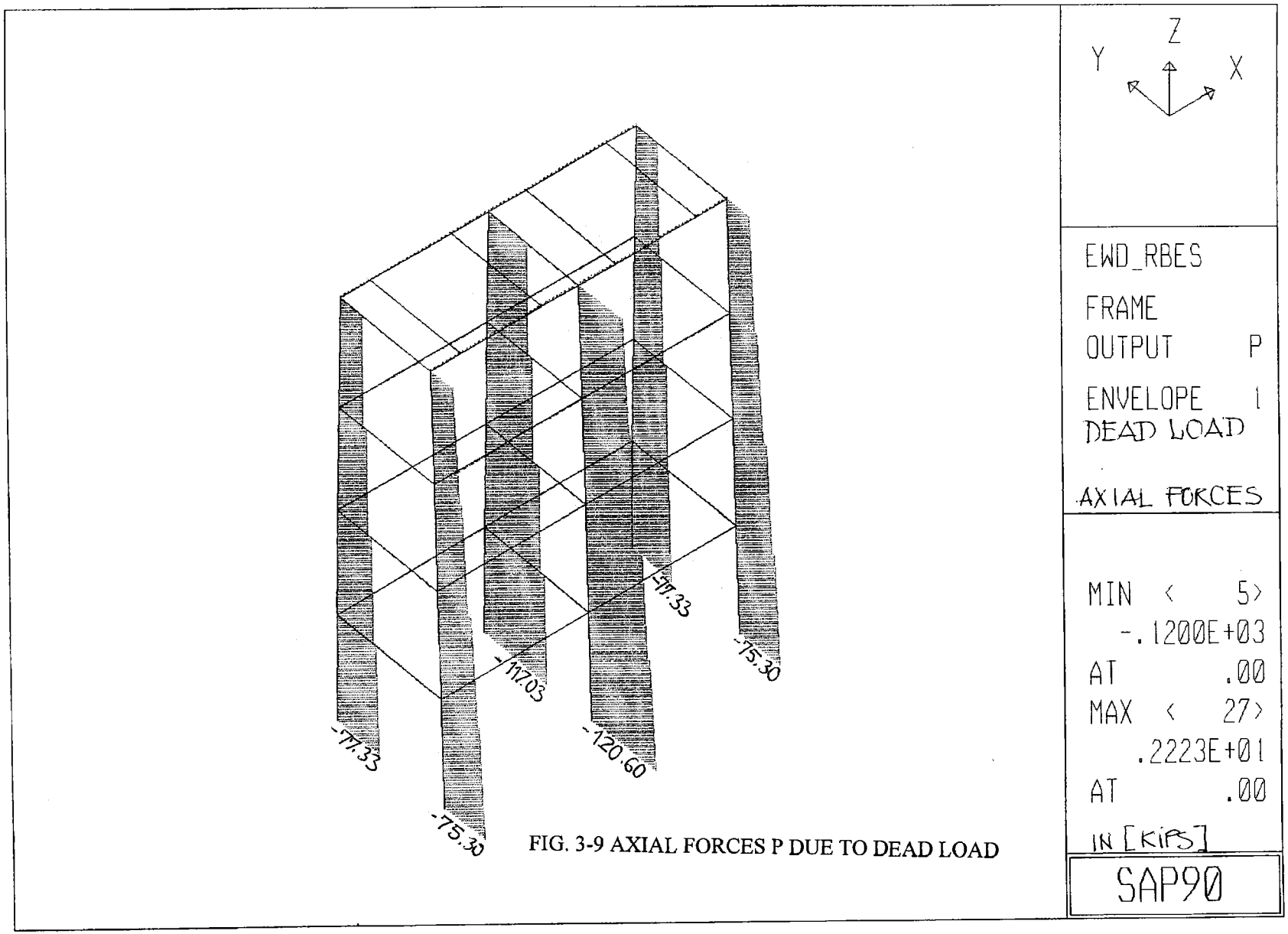

FIG. 3-9 AXIAL FORCES P DUE TO DEAD LOAD

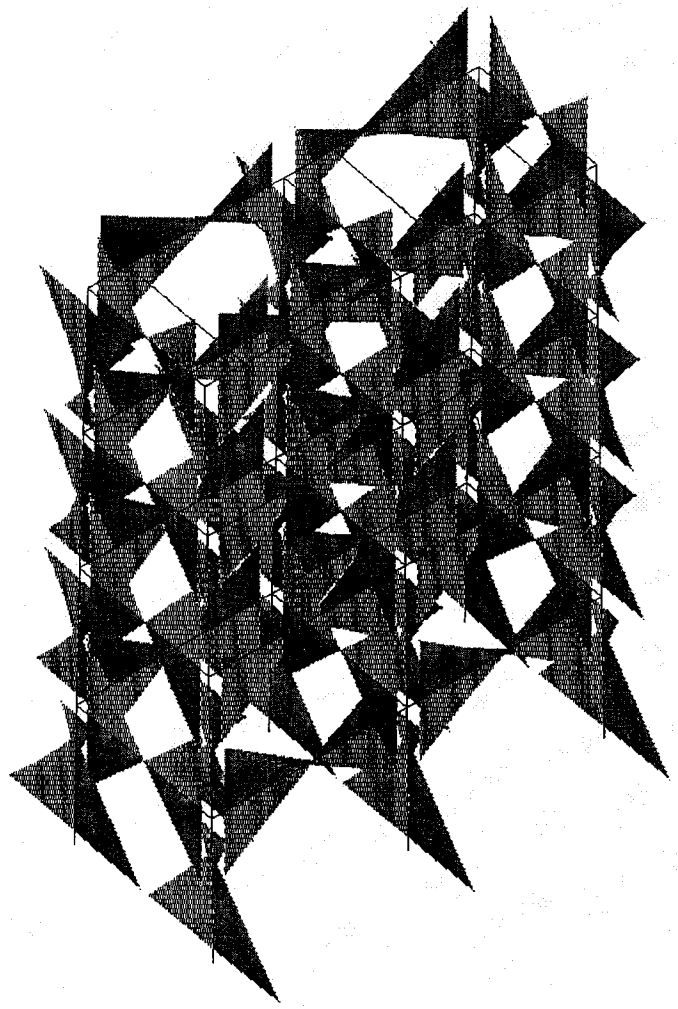

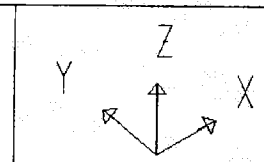

EWD_RBES

FRAME
OUTPUT M33

ENVELOPE 1
DEAD LOAD
+ −
EARTHQUAKE

MIN < 55>
-.1542E+04
AT 10.41
MAX < 55>
.1552E+04
AT .88
IN [KIPS--ft]

SAP90

FIG. 3-10 ENVELOPE OF BENDING MOMENTS M_{33} DUE TO DEAD AND EARTHQUAKE LOAD

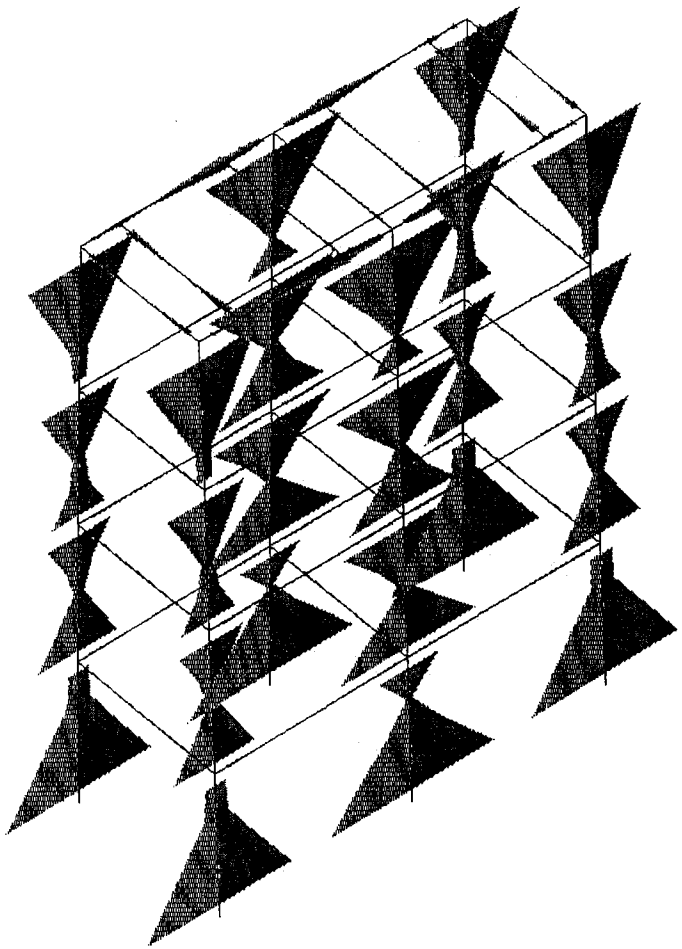

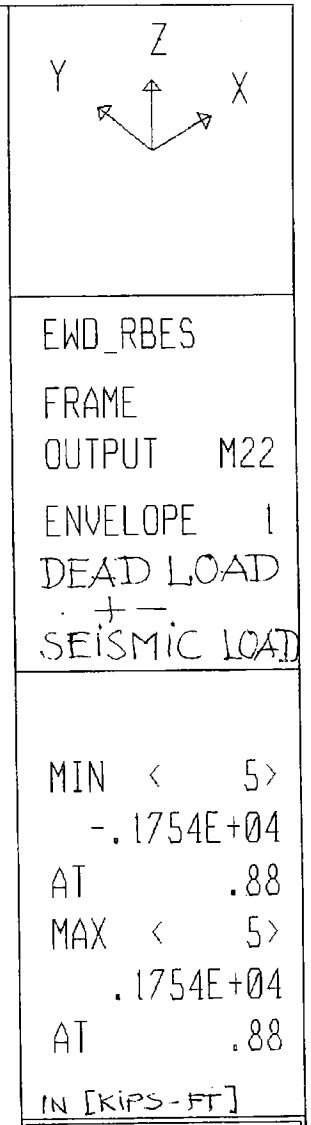

FIG. 3-11 ENVELOPE OF BENDING MOMENTS M_{22} DUE TO DEAD AND EARTHQUAKE LOAD

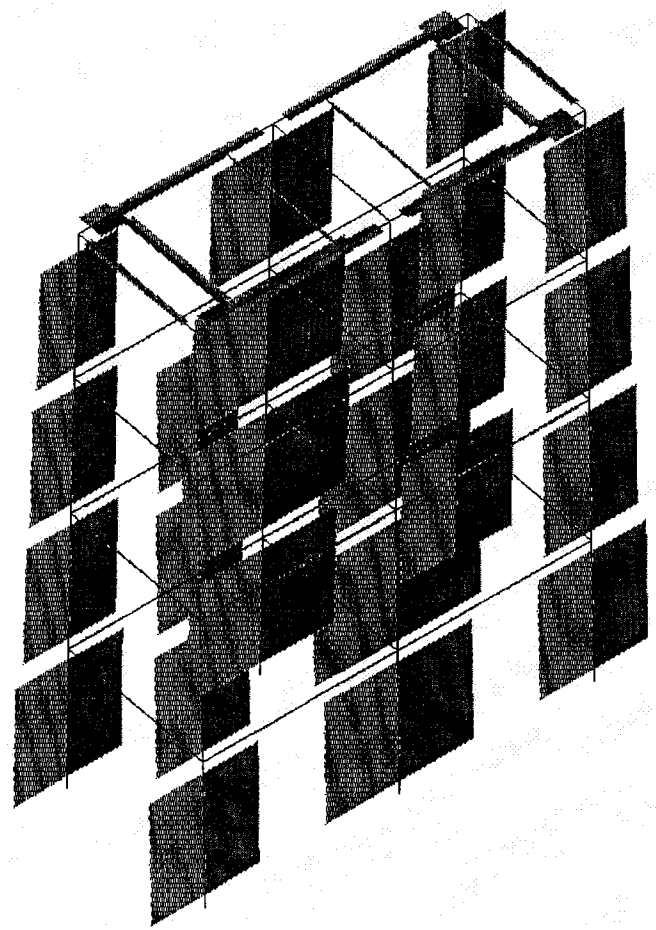

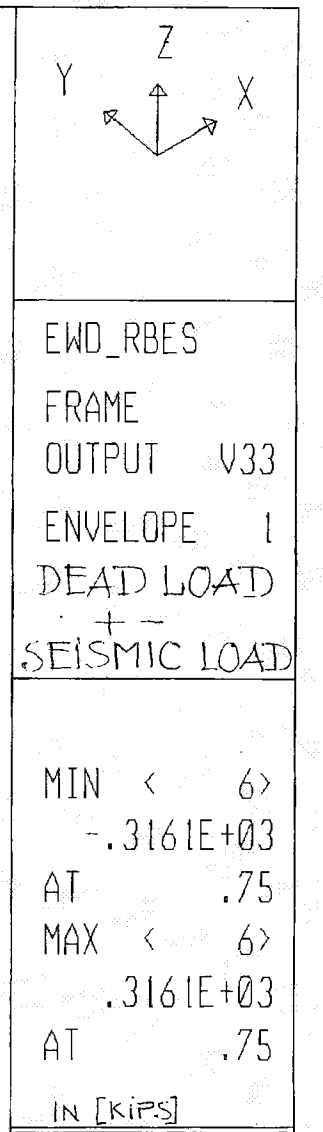

FIG. 3-12 ENVELOPE OF SHEAR FORCES V_{33} DUE TO DEAD AND EARTHQUAKE LOAD

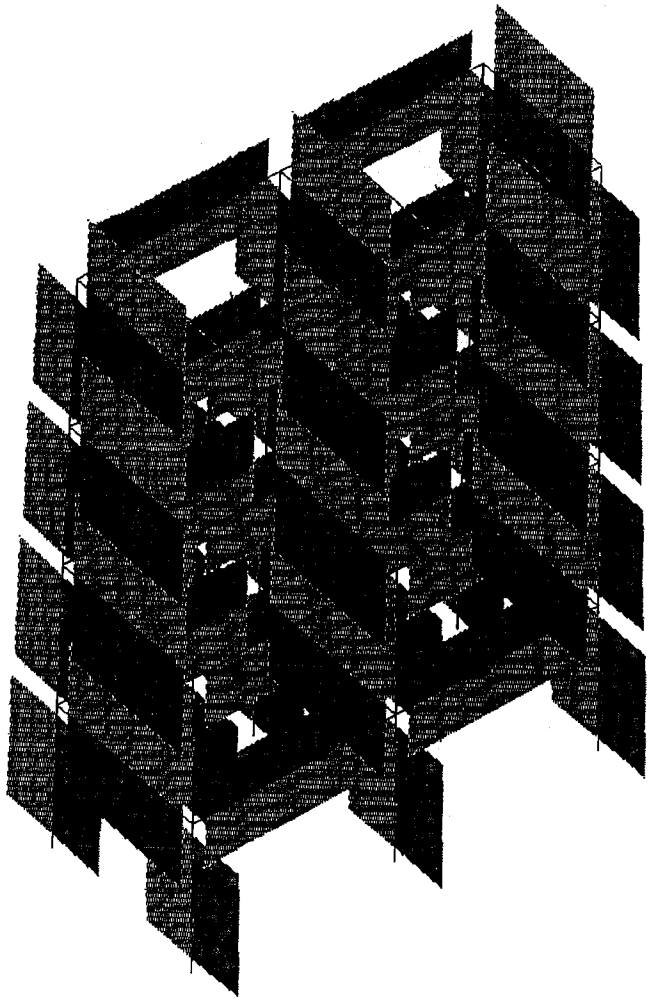

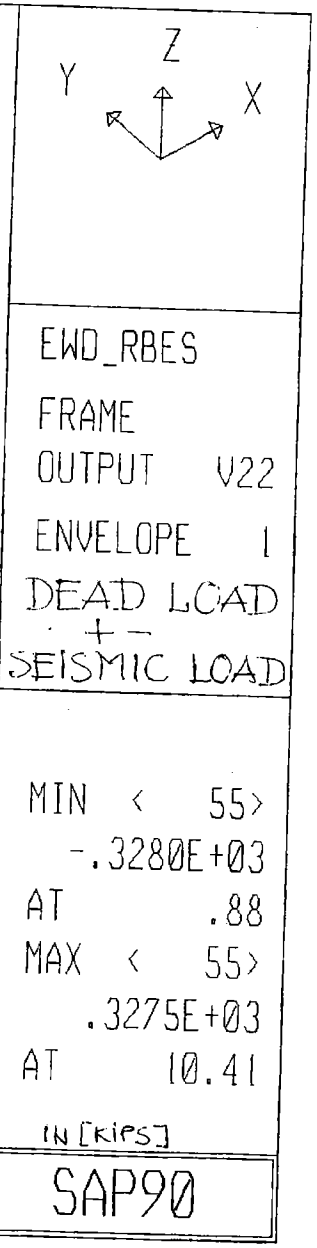

FIG. 3-13 ENVELOPE OF SHEAR FORCES V_{22} DUE TO DEAD AND EARTHQUAKE LOAD

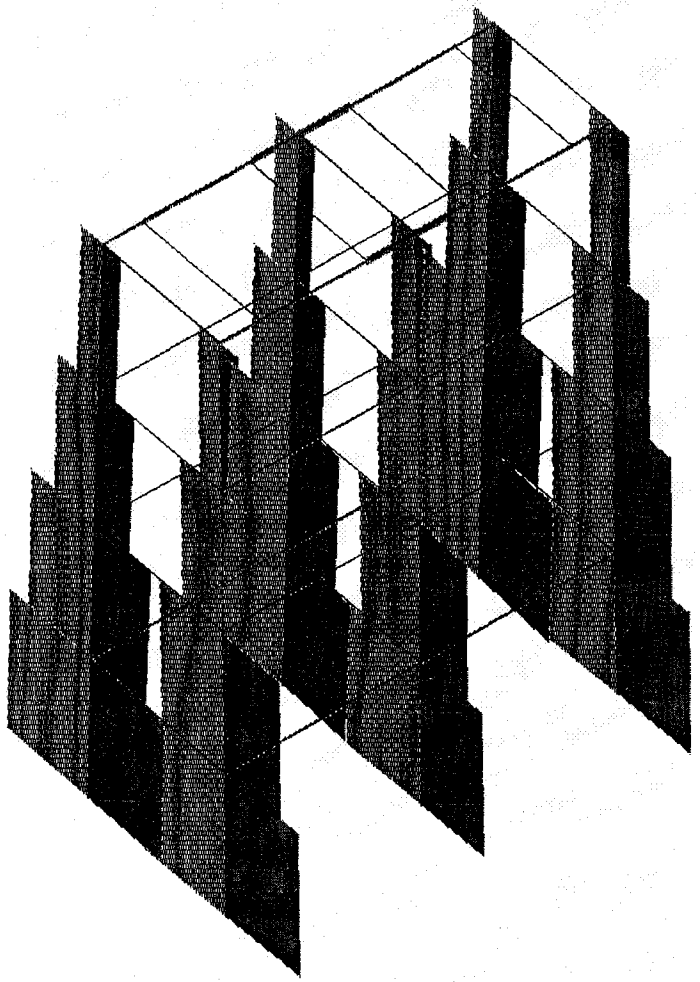

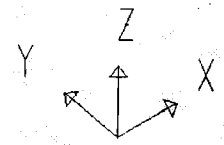

EWD_RBES

FRAME
OUTPUT P
ENVELOPE 1
DEAD LOAD
+ -
SEISMIC LOAD

MIN < 13>
-.1445E+04
AT .00
MAX < 13>
.1295E+04
AT 10.13

IN [KIPS]

SAP90

FIG. 3-14 ENVELOPE OF AXIAL FORCECE P DUE TO DEAD AND EARTHQUAKE LOAD

4. COPMARISON OF DEMAND - CAPACITY STRENGTHS

4.1 General

For evaluation of the earthquake performance of the tower, the required strengths (force demands) due to the postulated ground motion must be compared with the design strengths (force capacities) of the structural members. Such comparison will show which structural members will experience non-linear behavior in the form of yielding of reinforcing steels and cracking or crushing of the concrete. It will also indicate the extent of non-linear response as well as the need for additional non-linear analyses for the final safety evaluation of the tower. For this purpose the earthquake force demands made on the structure will be computed, and the corresponding force capacities will be obtained from the bending moment-axial force interaction diagrams developed for the beam and column members. Finally the resulting demand/capacity ratios will be computed and discussed.

4.2 Bending Moment – Axial Force Interaction Diagrams: Design Strength

The strength of a reinforced cross section is characterized by the bending moment - axial force interaction diagram. Computation of the interaction diagrams was performed by CSTAR computer program, developed by the U.S. Army Corps of Engineers. This program fulfills the requirements of ACI Code 318-88. In computation of the interaction diagrams, the axial force reduction factor of $\phi_P = 0.7$, and the bending moment reduction factor of $\phi_M = 0.9$ are selected in accordance with the ACI Code. The concrete stress of the equivalent stress block is, $f_c=0.85f_c'$; the stress block factor in equation, $a = \beta_1 c$ is, $\beta_1 = 0.85$; and the maximum concrete compressive strain is assumed to be, $\varepsilon_c = 0.003$. The concrete strength of, $f_c'=3.0$ ksi, and the steel yield strength of, $f_y=40$ ksi, are used in computation of the section strength.

The bending moment - axial force interaction diagrams are dcveloped for all column and beam sections. A typical column cross section at the base of tower is shown in Fig. 4-1. The nominal section strength and design strength as well as the maximum required strength are shown for two principal axes of moment of inertia.

4.3 Evaluation of Results

Examination of the interaction diagrams and the computed strengths show that the required strengths are far beyond the corresponding interaction diagram yield limits. Consequently, the demand/capacity ratios are much larger than one. The demand/capacity ratios for all beams and columns are listed in Tables 4-1 and 4-2. The demand/capacity ratios are computed unconservatively, because the capacities or design bending moments and axial forces are taken from the interaction diagrams at zero values of axial forces and bending moments, respectively. In other words, much larger demand/capacity ratios would have been obtained if the actual capacities had been used. Even with these unconservative values of capacities, the demand/capacity ratios are still much larger than 1, as shown in Tables 4-1 and 4-2. Specifically, the ratios for bending moments in columns range from 5.7 to 13.5 (Table 4-1) and for beams from 9.2 to 12.9 (Table 4-2). The strength ratios for tension axial forces in columns are in the range of 1.4 to 6.8 (Table 4-1) and for beams they are of no meaning since the axial demand is negligible.

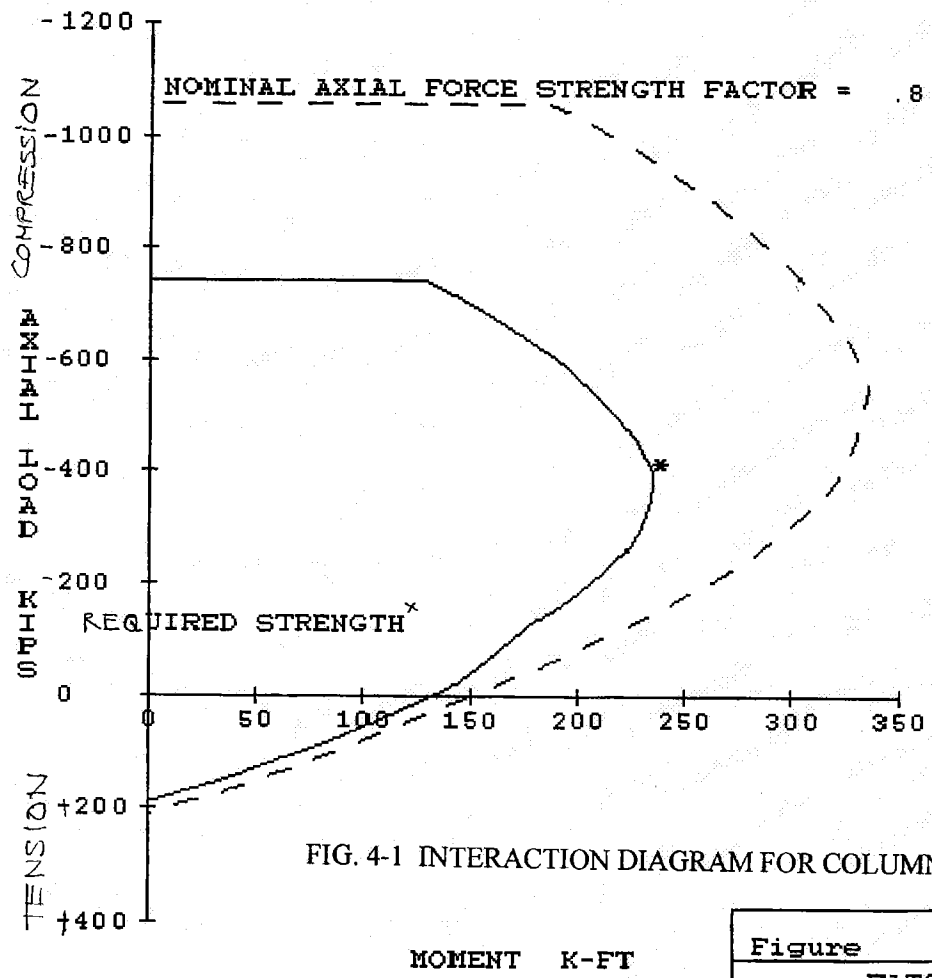

REQUIRED STRENGTH FOR COLUMN 5:
Column in tension,
M_3=1446 k-ft; M_2=1754 k-ft;
P=1092 kips, tension axial force;
Column in copression,
M_3=1457 k-ft; M_2=-1754 k-ft;
P=-1332 kips, compression axial force.

REQUIRED/DESIGN STRENGTH RATIO:
Column in tension,
$R^M{}_3$=1446/130=11.1; $R^M{}_2$=1754/130=13.5;
R^P=1092/200=5.5.
Column in compression,
$R^M{}_3$=1457/130=11.2; $R^M{}_2$=1754/130=13.5;
R^P=1332/750=1.8.

LEGEND

— —	NOMINAL STRENGTH
———	DESIGN STRENGTH
*	BALANCE POINT

FIG. 4-1 INTERACTION DIAGRAM FOR COLUMN SECTION

Figure	INTERACTION DIAGRAM
EATON WASH DAM	
OUTLET GATE TOWER:P-M INT.DIA	
COLUMNS, SEC A-A: 2-2&3-3 axe	

Table 4-1 Required/Design Strength Ratio (demand/capacity ratio) for Columns

Column ID #	DEMAND (Required Strength) M_3 [k-ft]	M_2 [k-ft]	P [k]	CAPACITY (Design Strength) M_3 [k-ft]	M_2 [k-ft]	P [ft]	DEMAND/CAPACITY RATIO (Strength Ratio) R^M_3	R^M_2	R^P
1	1437	1552	1288	130	130	190	11.1	11.9	6.8
2	919	838	981	130	130	190	7.1	6.4	5.2
3	896	822	622	130	130	190	6.9	6.3	3.3
4	1057	1172	305	186	145	220	5.7	8.1	1.4
5	1456	1754	1092	130	130	190	11.2	13.5	5.8
6	944	1432	839	130	130	190	7.3	11.0	4.4
7	914	1336	540	130	130	190	7.0	10.3	2.8
8	1067	1462	280	145	160	236	7.4	9.1	1.2
9	1436	1554	1288	130	130	190	11.0	12.0	6.8
10	919	845	981	130	130	190	7.1	6.5	5.2
11	896	820	622	130	130	190	6.9	6.3	3.3
12	1057	1136	306	186	145	220	5.7	7.8	1.4
13	1438	1548	1291	130	130	190	11.1	11.9	6.8
14	913	831	982	130	130	190	7.0	6.4	5.2
15	900	822	621	130	130	190	6.9	6.3	3.3
16	1062	1150	301	186	145	220	5.7	7.9	1.4
17	1456	1750	1102	130	130	190	11.2	13.5	5.8
18	939	1434	844	130	130	190	7.2	11.0	4.4
19	918	1334	540	130	130	190	7.1	10.3	2.8
20	1071	1438	265	145	160	236	7.4	9.0	1.2
21	1439	1550	1291	130	130	190	11.1	11.9	6.8
22	913	840	982	130	130	190	7.0	8.5	5.2
23	900	817	621	130	130	190	6.9	6.3	3.3
24	1062	1118	301	186	145	220	5.7	7.7	1.4

The results indicate that the yielding of reinforcing steels and cracking and crushing of the concrete would be extensive The plastic hinges will form at all column and beam connections and the tower response will be highly nonlinear. How large a displacement the tower will undergo and whether the tower will remain stable or not, is a question which can only be answered by performing a non-linear analysis.

The tower safety is an important issue, because it provides access to the outlet gatehouse and to the gate commands that control the water level in the reservoir. The ability to release the reservoir water in a controlled manner could save the dam and many lives and properties, should the dam experience severe damage during a major earthquake. Based on the result of linear elastic analysis, the final safety evaluation of the tower should be assessed by performing a nonlinear analysis. A nonlinear analysis of the tower will more accurately model the formation of plastic hinges at the column and beam connections and will account for the seismic energy dissipation as well as the reduction of seismic forces due to changes in vibration periods. It will also provide a more accurate estimate of displacements, number of plastic hinges, number of cycles of nonlinear behavior, and the hysteretic energy dissipation, all of which are essential to a final assessment of the tower stability.

Table 4-2 Required/Design Strength Ratio (demand/capacity ratio) for Beams

Beams	DEMAND (Required Strength)		CAPACITY (Design Strength)	DEMAND/CAPACITY RATIO (Strength Ratio)
ID #	M_3 [k-ft]	P [k]	M_3 [k-ft]	R^M_3
25	1154	23	113	10.2
26	1285	3	113	11.4
27	1046	16	113	9.3
31	1154	23	113	10.2
32	1285	3	113	11.4
33	1046	16	113	9.2
37	1149	23	113	10.2
38	1282	3	113	11.3
39	1038	14	113	9.2
43	1149	23	113	10.2
44	1282	3	113	11.4
45	1038	14	113	9.2
49	1337	7	118	11.3
50	1525	1	118	12.9
51	1350	2	118	11.4
54	1361	5	118	11.5
55	1552	1	118	13.2
56	1366	4	118	11.6
60	1337	7	118	11.3
61	1525	1	118	12.9
62	1350	2	118	11.4

5. CONCLUSION

The comprehensive 3D linear elastic earthquake response analysis of the tower indicates that the postulated MCE with a magnitude of M=7.3 can cause serious damage in the outlet gate tower. The required strengths of the columns and beams exceed far beyond the design strengths of these members, an indication that the tower will respond in highly nonlinear manner. The maximum lateral displacement of the tower using the cracked-section properties approaches 20", which may have exceeded the limit at which the tower could remain stable. At this displacement magnitude more likely the access bridge will be pulled off its supports at the dam crest.

It is not possible to draw a definitive conclusion based on the results of linear elastic analysis alone that the outlet gate tower would remain stable and functional after a major earthquake such as the postulated MCE. The results of linear analysis indicate that the tower will be seriously damaged, but the extent of damage and the stability conditions of tower need to be evaluated by a nonlinear analysis. The nonlinear analysis therefore is recommended for the final safety evaluation of the tower and design of effective retrofitting measures.

6. REFFERENCES

1. Set of Drawings for the Eaton Wash Dam and the Outlet gate Tower; Los Angeles County Department of Public Works (LACDPW), Los Angeles, 1997.

2. Guidelines for Earthquake Design and Evaluation of Structures Appurtenant to Dams; United States Committee on Large Dams (USCOLD), Denver, Colorado, 1995.

3. Building Code Requirements for Structural Concrete (ACI 318-88) and Commentary (ACI 318R-88); American Concrete Institute, Farmington Hills, Michigan, 1988.

4. Tables of Impedance Functions and Input Motions for Rectangular Foundations; H.L. Wong and J.E. Luco, Report No. CE 78-15, University of Southern California, Los Angeles, 1978.

4. SAP90, Structural Analysis Users Manual; Computer and Structures Inc., 1992.

Final Flood Hazard Warning and Contingency Plan for Arroyo Seco Channel

Devils Gate Reservoir Sediment Removal and Management Project

June 20, 2012
Prepared for:
Los Angeles County Flood Control District
900 South Fremont Avenue, 2nd Floor
Alhambra, CA 91803-1331

BUREAU VERITAS NORTH AMERICA, INC.
10620 Treena Street, Suite 200
San Diego, CA 92131
(858) 451-6100
www.us.bureauveritas.com

This page is intentionally left blank to facilitate 2-sided printing.

Engineer's Certification

This report was prepared under the supervision of Charles S. Mohrlock, a Registered Civil Engineer in the State of California. The Registered Civil Engineer attests to the technical information contained herein and the engineering data upon which recommendations, conclusions, and decisions are based.

Charles S. Mohrlock, P.E.
R.C.E. Number 78322

This page is intentionally left blank to facilitate 2-sided printing.

Table of Contents

1 Introduction 1

1.1 Purpose 1

1.2 Project Description 1

2 Flood Hazard Warning Plan Elements 3

2.1 Flood Threat Recognition System 3

2.1.1 Identification of Flood Hazards 3

2.1.2 Recognizing Flood Conditions 3

2.1.3 Agency Communications 5

2.1.4 Maintenance and Testing of System Components 5

2.2 Emergency Warning Dissemination 6

2.3 Response Efforts 6

2.3.1 Evacuation Areas 6

2.3.2 110 Freeway Closure 6

2.4 References 7

3 Appendices 9

List of Appendices

Appendix A – APNs for Potentially Impacted Areas

Appendix B – Evacuation Areas

Appendix C – 110 Freeway Closure

Appendix D – Recognizing Flood Conditions

List of Figures

Figure 1-1: Vicinity Map 2

List of Tables

Table 2-1: Conditions Associated with Channel Overtopping in Evacuation Areas 4

Table 2-2: Emergency Contacts 5

Acronyms

APN - Assessor's Parcel Number

FTRS - Flood Threat Recognition System

GIS - Geographic Information Systems

HEC-HMS – Hydrologic Engineering Center – Hydrologic Modeling System

HEC-RAS – Hydrologic Engineering Center River Analysis System

LACFCD - Los Angeles County Flood Control District

WMS – Watershed Modeling System

Abbreviations

cfs – cubic feet per second

CRS – Community Rating System

1 Introduction

1.1 Purpose

This Flood Hazard Warning and Contingency Plan for the Arroyo Seco Channel has been prepared per the request of the Los Angeles County Flood Control District (LACFCD) in an effort to minimize negative impacts associated with anticipated areas of flooding along the Arroyo Seco Channel during a Capital Flood Event under the current impacted reservoir condition of the Devils Gate Dam. The Capital Flood Event represents stormwater flows that are generated by a bulked, 50 year, 4-day duration storm that falls on a saturated watershed. The term bulked refers to the addition of debris from adjacent burned watersheds into the stormwater flows. The impacted reservoir condition assumes that the sediment elevation in the Dam is at the spillway ports and stormwater can only discharge over the top of the spillway.

This plan has been developed through application of FEMA's "CRS Credit for Flood Warning Systems" 2006 edition and, where possible, is catered to Arroyo Seco Channel site specific information obtained through site investigations and engineering reports. Specific information related to flooding along the Arroyo Seco Channel has been obtained from the "Arroyo Seco Channel Hydraulic Analysis" report prepared by Bureau Veritas North America, Inc. dated April 25, 2012, while specific hydrologic information regarding the Capital Flood Event and the Dam's impacted condition has been obtained from the "Hydrologic Analysis of Devils Gate Dam & Arroyo Seco Channel Tributaries" report prepared by Bureau Veritas North America, Inc. dated November 11, 2011.

Flood hazard mitigating efforts discussed in this report include the following: (1) recognizing Dam conditions that are anticipated to create flooding along the Arroyo Seco Channel, (2) disseminating warnings to the agencies responsible for potentially inundated areas in a timely manner, and (3) providing information on the anticipated flood characteristics occurring at each evacuation area.

Flood conditions addressed in this report reflect anticipated flooding related to the Capital Flood Event under the current impacted reservoir condition only. However, review of the previous hydraulic study indicates that several areas of the channel may overtop during stormwater flows that are significantly lower than the peak flows associated with a Capital Flood Event. It should be noted that the recommendations and calculations in this report do not apply to any Dam conditions or storm events other than those described above.

1.2 Project Description

The Devils Gate Dam (Dam) is located in the Los Angeles River Watershed in the City of Pasadena, CA. Situated immediately north of Interstate Highway 210, near the Rose Bowl Stadium, the Dam separates the upper and lower watersheds of the Arroyo Seco Channel and provides significant storage capacity for stormwater runoff originating north of the Dam in the San Gabriel Mountains.

Figure 1-1: Vicinity Map

The Dam was the first flood control facility built by the Los Angeles County Flood Control District and was completed in 1920 for flood control and groundwater recharge purposes. In 1971, the Dam was damaged by the Sylmar earthquake and was subsequently renovated and repaired in 1997 in order to perform its primary role of flood control for the downstream communities of Pasadena, South Pasadena, and Los Angeles. The Arroyo Seco Wash flows through the reservoir, now called Hahamongna Watershed Park, and proceeds through the outlet of the Dam.

In 2009, the Station fires burned through more than 160,000 acres of Los Angeles County. Approximately 68% of the 31.9 square mile Arroyo Seco Channel watershed tributary to the Devils Gate facility was burned during this event. Due to the denuding of this large natural tributary area, large sediment loads (in excess of 1 million cubic yards) were deposited within the reservoir area and adjacent Hahamongna Watershed Park.

Due to the volume of sediment deposited within the Dam reservoir, the Dam discharge structures are now under threat of becoming covered with sediment. These sediment deposits have allowed for native and non-native vegetation to establish itself within the Dam reservoir.

The Devils Gate Dam directly discharges runoff to the Arroyo Seco Channel. The channel is a natural creek for several hundred feet downstream of the Devils Gate Dam; however, this rapidly converts to an engineered concrete lined flood control channel constructed in 1935. The Arroyo Seco Channel continues to flow in a southerly direction through Pasadena, meandering through Brookside Park and around the Rose Bowl Stadium, ultimately draining to the Los Angeles River located approximately nine (9) miles downstream of Devils Gate Dam. The Arroyo Seco Channel lower watershed is approximately 95% urbanized with a large amount of developed areas located adjacent to the Arroyo Seco Channel.

Per the request of the LACFCD, hydrologic and hydraulic analyses have been performed for the existing sediment impacted reservoir that currently has limited available storage for flood control. Because several areas of potential flooding have been identified in these analyses, the LACFCD has also requested preparation of a Flood Hazard and Warning Contingency Plan.

2 Flood Hazard Warning Plan Elements

2.1 Flood Threat Recognition System

The first element of a flood warning program is the operation of a system that predicts flooding events and notifies all appropriate acting agencies. This system is identified as the Flood Threat Recognition System (FTRS) and consists of several components as identified below.

2.1.1 Identification of Flood Hazards

Potential areas of flood inundation along the Arroyo Seco Channel have been determined per the "Arroyo Seco Channel Hydraulic Analysis" report prepared by Bureau Veritas North America, Inc. dated April 25, 2012. The areas of flooding represented within this report reflect the conditions generated during the peak flow of the Capital Flood Event under the current impacted condition of the Devils Gate Dam as detailed in the "Hydrologic Analysis of Devils Gate Dam & Arroyo Seco Channel Tributaries" report prepared by Bureau Veritas North America, Inc. dated November 11, 2011. As such, this flood hazard warning and contingency plan addresses potential flood hazard mitigations applicable to the Capital Flood Event for the impacted reservoir condition only.

The previously performed hydraulic analysis indicates that several areas of potential flooding are anticipated along the Arroyo Seco Channel. While some of these areas consist of natural, undeveloped land that will not require flood response efforts, many of these areas contain roads, streets, and residential or commercial structures that will require flood response efforts. The areas requiring flood response efforts have been organized into six evacuation areas based upon characteristics such as location and associated channel overtopping flow rates. These areas of potential flooding include several sections of roadway, of which the 110 Freeway is of particular concern, as well as 443 properties with residential and/or commercial structures that should be evacuated during the Capital Flood Event.

This report illustrates and describes the anticipated flood hazard areas in the Appendices A through C. Appendix A includes an exhibit and tabular list of all properties for which evacuation is recommended, Appendix B includes exhibits and discussion for individual evacuation areas, and Appendix C includes exhibits and discussion for the proposed 110 Freeway closure.

2.1.2 Recognizing Flood Conditions

In order to facilitate the execution of appropriate flood response efforts, it is necessary to have a system capable of recognizing conditions that are anticipated to generate flooding in a manner that allows for action to be taken before the flooding begins. Per discussions held with the Los Angeles County Department of Public Works, it has been determined that a system capable of

recognizing potential flood conditions at 8-hours, 4-hours, and 1-hour prior to channel overtopping is adequate for this Flood Hazard Warning and Contingency Plan.

Through analysis of the previously performed hydrologic and hydraulic analyses, a system that associates overtopping flow rates at each identified evacuation area with water surface elevations occurring behind the Devils Gate Dam 8-hours, 4-hours, and 1-hour prior to downstream channel overtopping has been developed. This association will allow for flooding associated with the Capital Flood Event under the impacted Dam condition to be identified from a single point at the Devils Gate Dam. A summary of this relationship is illustrated in Table 2-1 below. Detailed calculations as well as a discussion of the methodology used to develop this system are included in Appendix D of this report.

Conditions Associated with Channel Overtopping in Evacuation Areas			
Evacuation Area	**Water Surface Elevation Behind Dam at X Hours Prior to Channel Overtopping**		
	8-Hour Warning	**4-Hour Warning**	**1-Hour Warning**
1	1,069.7’	1,070.4’	1071.3’
2	1,070.0’	1,070.8’	1072.6’
3	1,069.5’	1,070.0’	1070.5’
4	1,069.8’	1,070.4’	1071.4’
5	1,069.7’	1,070.4’	1071.2’
6	1,069.7’	1,070.3’	1071.2’

Table 2-1: Conditions Associated with Channel Overtopping in Evacuation Areas

Portions of the Channel located within the identified evacuation areas are anticipated to begin overtopping 8-hours, 4-hours, or 1-hour after the above water surface elevation is observed behind the Dam. The extent of flooding generated by these overtopping events is dependent on the intensity and duration of rainfall that occurs after this elevation is observed. If rainfall ceases at the elevations indicated above, then significant flooding effects may not be anticipated; however, if the rainfall continues at the Capital Flood Event intensity and duration, the full flooding effects illustrated in this report are anticipated. As such, evacuations upon observation of water surface elevations from the table above may result in unnecessary evacuations depending upon rainfall characteristics which cannot be predicted.

While water surface elevations are currently monitored on a daily basis, water surface levels will be monitored with regards to flooding potential when the Devils Gate Dam spillway ports become clogged or Gates 2 and 3 are non-operational due to sediment accumulation and a significant storm event is forecast with 24 hour rainfall depths over 6 inches (Capital Flood Event).

When water surface elevations behind the Devils Gate Dam reach the 8-hour warning levels indicated in the Table 2-1 above, the Los Angeles County Department of Public Works shall notify the agencies identified in Table 2-2 to begin coordinating emergency response efforts associated with the corresponding evacuation areas identified in Appendix B of this report. Additionally, the

Los Angeles County Department of Public works shall send channel observers to each of the identified evacuation areas in order to observe the actual channel conditions occurring. Every hour, and at the first sight of imminent channel overtopping, these channel observers shall provide updates to the appropriate agencies identified in Table 2-2 below. These channel observations and agency notifications shall continue until after appropriate evacuations have taken place or after water surface elevations behind the Dam have fallen below the 8-hour warning elevations provided in Table 2-1.

2.1.3 Agency Communications

Local Law Enforcement will be responsible for all inter-agency coordination and evacuation procedures. CALTRANS will be responsible for road closures and detours associated with this Flood Hazard Warning and Contingency Plan. It shall be the responsibility of the Los Angeles County Department of Public Works, Water Resource Division to notify the appropriate agencies, as identified in Table 2-2 below, of an anticipated qualifying flood event.

Emergency Contacts		
Agency	**Reason for Contact**	**24-hr Contact Information**
Los Angeles County Sheriff: Emergency Operations Bureau	Identification of qualifying flood event.	(323) 980-2211
Los Angeles County Sheriff: Dispatch	Identification of qualifying flood event.	(323) 267-2504
Pasadena Police Department	Identification of qualifying flood event.	(626) 744-4501
South Pasadena Police Department	Identification of qualifying flood event.	(626) 403-7270
Los Angeles Police Department	Identification of qualifying flood event.	(213) 485-3294
CALTRANS – District 7	Identification of qualifying flood event.	(213) 897-3656

Table 2-2: Emergency Contacts

2.1.4 Maintenance and Testing of System Components

The Los Angeles County Department of Public Works shall be responsible for establishing and maintaining a system capable of determining reliable water surface elevations behind the Devils Gate Dam.

2.2 Emergency Warning Dissemination

After a flood threat has been recognized and the appropriate acting agencies have been notified by the LACFCD, it will be the responsibility of the informed agencies to disseminate the information and take appropriate action as they see fit.

2.3 Response Efforts

After a threat of flooding has been identified and the appropriate acting agencies have been notified, the recommended response efforts should begin. As requested by the LACFCD, a map of evacuation areas based upon theoretical flooding levels has been developed and is included in Appendix A.

2.3.1 Evacuation Areas

The previously performed hydraulic analysis indicates that several areas of potential flooding are anticipated due to stormwater flows overtopping the Arroyo Seco Channel during the Capital Flood Event. These areas of potential flooding include several sections of roadway, of which the 110 Freeway is of particular concern, as well as 443 properties with residential and/or commercial structures that should be evacuated.

Appendix B of this report includes exhibits and discussion of the areas requiring evacuation.

2.3.2 110 Freeway Closure

Results from the hydraulic analysis anticipate that flooding associated with the Capital Flood Event may inundate several portions of the 110 Freeway. In order to protect commuters from harmful flood areas and/or potentially dangerous driving conditions, it is recommended that approximately 3.4 miles of the 110 Freeway between East Avenue 43 and Orange Grove Avenue be temporarily closed.

Appendix C of this report includes exhibits illustrating the 110 Freeway Closures

2.4 References

Arroyo Seco Channel Hydraulic Analysis, prepared by Bureau Veritas, dated April 25, 2012

FEMA CRS Credit for Flood Warning Programs, 2006 Edition.

Hydrologic Analysis of Devils Gate Dam & Arroyo Seco Channel Tributaries, prepared by Bureau Veritas, dated November 11, 2011.

Los Angeles County Flood Control District – Devils Gate Dam Background/Reference Information.

Los Angeles County Flood Control District - Devils Gate Dam and Reservoir Post-Fire Sediment Removal - Short Term Solution Report for Sediment Accumulation Along the Face of the Dam, March 2011.

Los Angeles County Flood Control District - Hydraulic Design Manual, March 1982.

Los Angeles County Hydrology Manual, January 2006.

Los Angeles County Sedimentation Manual, January 2006.

This page is intentionally left blank to facilitate 2-sided printing.

3 Appendices

This page is intentionally left blank to facilitate 2-sided printing.

Appendix A

APNs for Potentially Impacted Areas

This page is intentionally left blank to facilitate 2-sided printing.

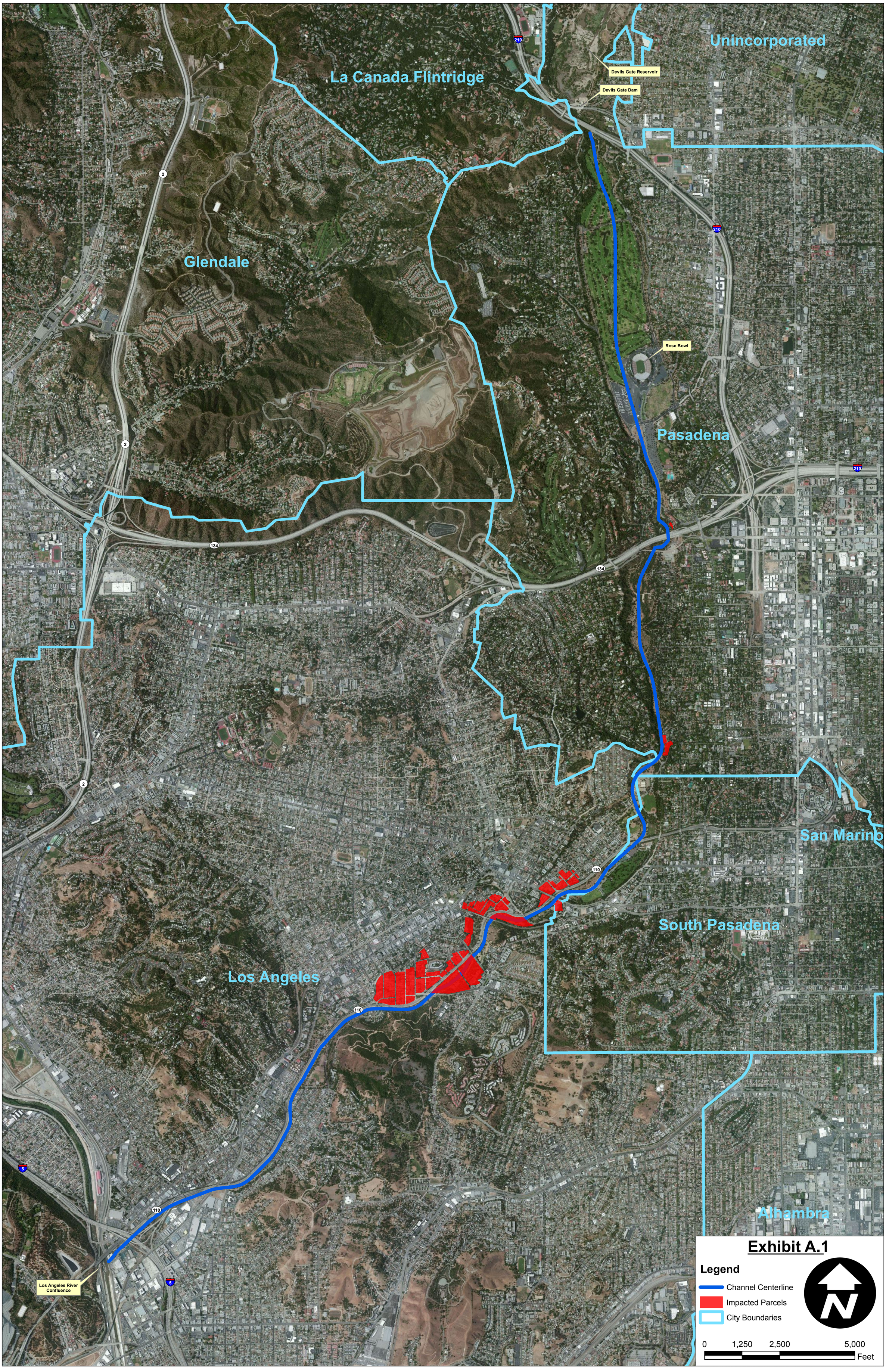
Unincorporated
La Canada Flintridge
Devils Gate Reservoir
Devils Gate Dam
Glendale
Rose Bowl
Pasadena
San Marino
South Pasadena
Los Angeles
Alhambra
Los Angeles River Confluence
Exhibit A.1
Legend
Channel Centerline
Impacted Parcels
City Boundaries
0
1,250
2,500
5,000
Feet

This page is intentionally left blank to facilitate 2-sided printing.

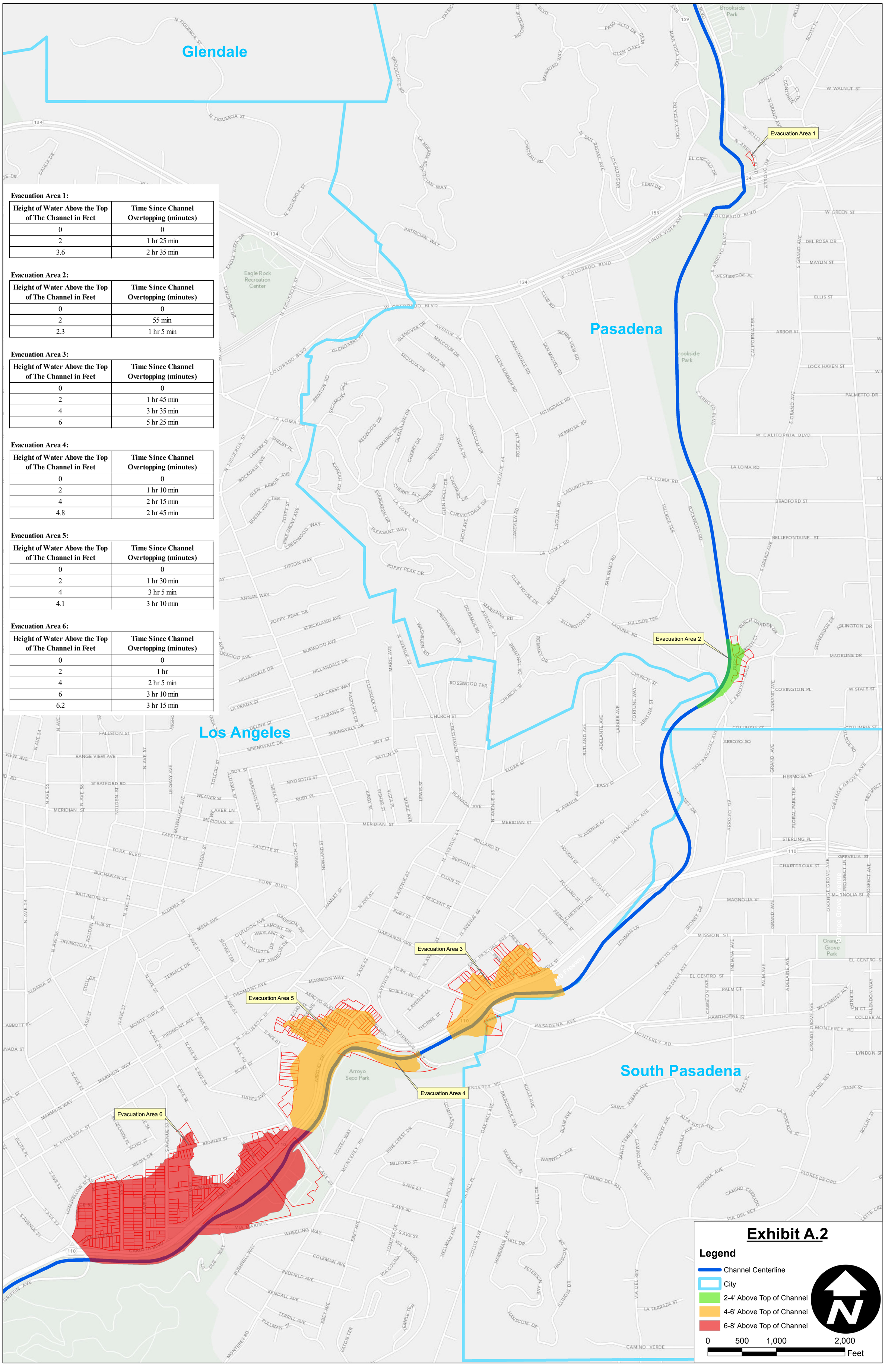

Evacuation Area 1:

Height of Water Above the Top of The Channel in Feet	Time Since Channel Overtopping (minutes)
0	0
2	1 hr 25 min
3.6	2 hr 35 min

Evacuation Area 2:

Height of Water Above the Top of The Channel in Feet	Time Since Channel Overtopping (minutes)
0	0
2	55 min
2.3	1 hr 5 min

Evacuation Area 3:

Height of Water Above the Top of The Channel in Feet	Time Since Channel Overtopping (minutes)
0	0
2	1 hr 45 min
4	3 hr 35 min
6	5 hr 25 min

Evacuation Area 4:

Height of Water Above the Top of The Channel in Feet	Time Since Channel Overtopping (minutes)
0	0
2	1 hr 10 min
4	2 hr 15 min
4.8	2 hr 45 min

Evacuation Area 5:

Height of Water Above the Top of The Channel in Feet	Time Since Channel Overtopping (minutes)
0	0
2	1 hr 30 min
4	3 hr 5 min
4.1	3 hr 10 min

Evacuation Area 6:

Height of Water Above the Top of The Channel in Feet	Time Since Channel Overtopping (minutes)
0	0
2	1 hr
4	2 hr 5 min
6	3 hr 10 min
6.2	3 hr 15 min

This page is intentionally left blank to facilitate 2-sided printing.

The previously performed hydraulic analysis indicates that several areas of potential flooding are anticipated due to overtopping of the Arroyo Seco Channel during the Capital Flood Event. Areas of anticipated flooding that may pose a threat to existing residential and/or commercial structures have been identified in this report by overlaying the previously determined flood limits with available APN maps.

Exhibit A.1 depicts the entire analyzed length of the Arroyo Seco Channel extending from the Devils Gate Dam to the Los Angeles River Confluence and includes aerial imagery, city boundaries, pertinent labels, and affected parcels.

Exhibit A.2 depicts a zoomed in illustration of the affected parcels and includes city boundaries, pertinent labels, affected parcels and color coded shading representing maximum anticipated flood depths with respect to the top of the adjacent Arroyo Seco Channel.

Additionally, an APN Evacuation table identifying evacuation area numbers, assessor parcel numbers, and parcel addresses is included on the pages that follow.

Areas of anticipated flooding that do not have a negative effect on the surrounding streets, roads, residences or businesses are not identified in this report.

APN Evacuation Table		
Evacuation Area #	APN #	Parcel Address
1	570-803-2003	65 N. ARROYO BLVD, PASADENA, CA 91105
2	571-700-8001	735 BUSCH GARDEN DR, PASADENA, CA 91105
2	571-701-1003	1130 BUSCH GARDEN CT, PASADENA, CA 91105
2	571-701-1004	1140 BUSCH GARDEN CT, PASADENA, CA 91105
2	571-701-1005	1150 BUSCH GARDEN CT, PASADENA, CA 91105
2	571-701-1006	1160 BUSCH GARDEN CT, PASADENA, CA 91105
2	571-701-1007	1170 BUSCH GARDEN CT, PASADENA, CA 91105
2	571-700-8002	725 BUSCH GARDEN DR, PASADENA, CA 91105
3	531-100-1011	N/A
3	549-303-0012	228 CHESTNUT AVE, LOS ANGELES, CA 90042
3	549-303-1015	300 SAN PASCUAL AVE, LOS ANGELES, CA 90042
3	549-303-1010	310 SAN PASCUAL AVE, LOS ANGELES, CA 90042
3	549-303-1012	308 SAN PASCUAL AVE, LOS ANGELES, CA 90042
3	549-303-0014	218 CHESTNUT AVE, LOS ANGELES, CA 90042
3	549-302-8020	118 SAN PASCUAL AVE, LOS ANGELES, CA 90042
3	549-302-8017	130 SAN PASCUAL AVE, LOS ANGELES, CA 90042
3	549-302-8018	126 SAN PASCUAL AVE, LOS ANGELES, CA 90042
3	549-302-8015	138 SAN PASCUAL AVE, APT 0005, LOS ANGELES, CA 90042
3	549-302-8016	6710 SALONICA ST, LOS ANGELES, CA 90042
3	549-302-8901	N/A
3	549-302-8900	N/A
3	549-302-9013	200 SAN PASCUAL AVE, LOS ANGELES, CA 90042
3	549-302-9018	6717 SALONICA ST, LOS ANGELES, CA 90042
3	549-302-9021	6715 SALONICA ST, LOS ANGELES, CA 90042
3	549-302-9019	6721 SALONICA ST, LOS ANGELES, CA 90042
3	549-302-9023	6727 SALONICA ST, LOS ANGELES, CA 90042
3	549-302-9024	6729 SALONICA ST, LOS ANGELES, CA 90042
3	549-303-0900	N/A
3	549-303-0016	210 CHESTNUT AVE, LOS ANGELES, CA 90042
3	549-303-0015	214 CHESTNUT AVE, LOS ANGELES, CA 90042
3	549-303-0013	222 CHESTNUT AVE, LOS ANGELES, CA 90042
3	549-303-0008	211 BRIDEWELL ST, LOS ANGELES, CA 90042
3	549-303-0007	215 BRIDEWELL ST, LOS ANGELES, CA 90042
3	549-303-0006	219 BRIDEWELL ST, LOS ANGELES, CA 90042
3	549-303-0005	225 BRIDEWELL ST, LOS ANGELES, CA 90042
3	549-303-0004	229 BRIDEWELL ST, LOS ANGELES, CA 90042
3	549-303-0003	231 BRIDEWELL ST, LOS ANGELES, CA 90042
3	549-303-0001	235 BRIDEWELL ST, LOS ANGELES, CA 90042
3	549-303-0002	6740 PRINCESS DR, LOS ANGELES, CA 90042
3	549-303-0011	230 CHESTNUT AVE, LOS ANGELES, CA 90042
3	549-303-0010	234 CHESTNUT AVE, LOS ANGELES, CA 90042
3	549-303-0009	6736 PRINCESS DR, LOS ANGELES, CA 90042
3	549-302-9012	235 CHESTNUT AVE, LOS ANGELES, CA 90042
3	549-303-1025	306 CHESTNUT AVE, LOS ANGELES, CA 90042

APN Evacuation Table		
Evacuation Area #	APN #	Parcel Address
3	549-303-1017	6812 CRESCENT ST, LOS ANGELES, CA 90042
3	549-303-1022	318 CHESTNUT AVE, LOS ANGELES, CA 90042
3	549-303-3025	400 CHESTNUT AVE, LOS ANGELES, CA 90042
3	549-303-1014	6725 PRINCESS DR, LOS ANGELES, CA 90042
3	549-303-1020	324 CHESTNUT AVE, LOS ANGELES, CA 90042
3	549-303-1019	326 CHESTNUT AVE, LOS ANGELES, CA 90042
3	549-303-1027	300 CHESTNUT AVE, LOS ANGELES, CA 90042
3	549-303-1024	312 CHESTNUT AVE, LOS ANGELES, CA 90042
3	549-303-1011	307 CHESTNUT AVE, LOS ANGELES, CA 90042
3	549-303-1013	6729 PRINCESS DR, LOS ANGELES, CA 90042
3	549-303-1018	324 CHESTNUT AVE, LOS ANGELES, CA 90042
3	549-303-1009	311 CHESTNUT AVE, LOS ANGELES, CA 90042
3	549-303-1900	N/A
3	549-303-1016	6816 CRESCENT ST, LOS ANGELES, CA 90042
3	549-303-1026	6815 PRINCESS DR, LOS ANGELES, CA 90042
3	549-303-1023	320 CHESTNUT AVE, LOS ANGELES, CA 90042
3	549-303-1021	322 CHESTNUT AVE, LOS ANGELES, CA 90042
3	549-303-1004	327 CHESTNUT AVE, LOS ANGELES, CA 90042
3	549-303-1007	319 CHESTNUT AVE, LOS ANGELES, CA 90042
3	549-303-1002	6720 CRESCENT ST, LOS ANGELES, CA 90042
3	549-303-1003	6728 CRESCENT ST, LOS ANGELES, CA 90042
3	549-303-2020	401 CHESTNUT AVE, LOS ANGELES, CA 90042
3	531-100-1038	1 PASADENA AVE, SOUTH PASADENA, CA 91030
3	531-100-1015	1 PASADENA AVE, SOUTH PASADENA, CA 91030
3	531-100-1010	1001 ARROYO VERDE RD, SOUTH PASADENA, CA 91030
3	549-203-8025	101 BRIDEWELL ST, LOS ANGELES, CA 90042
4	531-200-1900	N/A
5	549-202-1013	337 S. AVENUE 60, LOS ANGELES, CA 90042
5	549-202-1012	327 S. AVENUE 60, LOS ANGELES, CA 90042
5	549-202-6018	N/A
5	549-202-6017	6127 ECHO ST, LOS ANGELES, CA 90042
5	549-203-1018	6436 LA RIBA WAY, LOS ANGELES, CA 90042
5	549-202-8011	6222 BERTHA ST, LOS ANGELES, CA 90042
5	549-202-8012	6218 BERTHA ST, LOS ANGELES, CA 90042
5	549-202-8013	6214 BERTHA ST, LOS ANGELES, CA 90042
5	549-202-8014	6210 BERTHA ST, LOS ANGELES, CA 90042
5	549-202-8010	6228 BERTHA ST, LOS ANGELES, CA 90042
5	549-203-1021	6424 LA RIBA WAY, LOS ANGELES, CA 90042
5	549-202-2014	6036 HAYES AVE, LOS ANGELES, CA 90042
5	549-202-2012	6048 HAYES AVE, LOS ANGELES, CA 90042
5	549-202-2010	6056 HAYES AVE, LOS ANGELES, CA 90042
5	549-202-2011	6050 HAYES AVE, LOS ANGELES, CA 90042
5	549-202-2009	6060 HAYES AVE, LOS ANGELES, CA 90042
5	549-202-2007	6070 HAYES AVE, LOS ANGELES, CA 90042

APN Evacuation Table		
Evacuation Area #	APN #	Parcel Address
5	549-202-2013	6038 HAYES AVE, LOS ANGELES, CA 90042
5	549-202-2008	6066 HAYES AVE, LOS ANGELES, CA 90042
5	549-202-8015	6208 BERTHA ST, LOS ANGELES, CA 90042
5	549-203-0013	350 S. AVENUE 63, LOS ANGELES, CA 90042
5	549-203-0012	346 S. AVENUE 63, LOS ANGELES, CA 90042
5	549-203-0011	340 S. AVENUE 63, LOS ANGELES, CA 90042
5	549-203-0010	336 S. AVENUE 63, LOS ANGELES, CA 90042
5	549-203-0007	324 S. AVENUE 63, LOS ANGELES, CA 90042
5	549-203-0009	332 S. AVENUE 63, LOS ANGELES, CA 90042
5	549-203-0008	328 S. AVENUE 63, LOS ANGELES, CA 90042
5	549-203-0005	316 S. AVENUE 63, LOS ANGELES, CA 90042
5	549-203-0006	320 S. AVENUE 63, LOS ANGELES, CA 90042
5	549-203-2030	217 S. AVENUE 64, LOS ANGELES, CA 90042
5	549-202-0001	6028 HAYES AVE, LOS ANGELES, CA 90042
5	549-202-7003	6209 HAYES AVE, LOS ANGELES, CA 90042
5	549-202-7002	6203 HAYES AVE, LOS ANGELES, CA 90042
5	549-202-7001	6202 ECHO ST, LOS ANGELES, CA 90042
5	549-202-6019	6119 ECHO ST, LOS ANGELES, CA 90042
5	549-202-8020	6204 BERTHA ST, LOS ANGELES, CA 90042
5	549-202-8006	6238 BERTHA ST, LOS ANGELES, CA 90042
5	549-202-8019	6234 BERTHA ST, LOS ANGELES, CA 90042
5	549-202-8009	6232 BERTHA ST, LOS ANGELES, CA 90042
5	549-202-7005	6217 HAYES AVE, LOS ANGELES, CA 90042
5	549-203-2009	6327 ARROYO GLEN ST, LOS ANGELES, CA 90042
5	549-203-2011	6337 ARROYO GLEN ST, LOS ANGELES, CA 90042
5	549-203-2010	6331 ARROYO GLEN ST, LOS ANGELES, CA 90042
5	549-203-2007	6319 ARROYO GLEN ST, LOS ANGELES, CA 90042
5	549-203-2005	6315 ARROYO GLEN ST, LOS ANGELES, CA 90042
5	549-203-2004	6311 ARROYO GLEN ST, LOS ANGELES, CA 90042
5	549-203-0015	6332 ARROYO GLEN ST, LOS ANGELES, CA 90042
5	549-203-0003	6316 ARROYO GLEN ST, LOS ANGELES, CA 90042
5	549-203-0014	6328 ARROYO GLEN ST, LOS ANGELES, CA 90042
5	549-203-0002	6320 ARROYO GLEN ST, LOS ANGELES, CA 90042
5	549-203-0004	310 S. AVENUE 63, LOS ANGELES, CA 90042
5	549-203-0001	6324 ARROYO GLEN ST, LOS ANGELES, CA 90042
5	549-203-0016	6334 ARROYO GLEN ST, LOS ANGELES, CA 90042
5	549-202-9009	6310 ARROYO GLEN ST, LOS ANGELES, CA 90042
5	549-202-9008	309 S. AVENUE 63, LOS ANGELES, CA 90042
5	549-202-9005	325 S. AVENUE 63, LOS ANGELES, CA 90042
5	549-202-9006	321 S. AVENUE 63, LOS ANGELES, CA 90042
5	549-202-9007	315 S. AVENUE 63, LOS ANGELES, CA 90042
5	549-202-9004	329 S. AVENUE 63, LOS ANGELES, CA 90042
5	549-202-9003	333 S. AVENUE 63, LOS ANGELES, CA 90042
5	549-202-9001	347 S. AVENUE 63, LOS ANGELES, CA 90042

APN Evacuation Table		
Evacuation Area #	APN #	Parcel Address
5	549-202-9002	337 S. AVENUE 63, LOS ANGELES, CA 90042
5	549-202-9023	6200 HAYES AVE, LOS ANGELES, CA 90042
5	549-202-9021	6208 HAYES AVE, LOS ANGELES, CA 90042
5	549-202-9022	6204 HAYES AVE, LOS ANGELES, CA 90042
5	549-202-9020	6212 HAYES AVE, LOS ANGELES, CA 90042
5	549-202-9019	6216 HAYES AVE, LOS ANGELES, CA 90042
5	549-202-9018	6220 HAYES AVE, LOS ANGELES, CA 90042
5	549-202-9017	6226 HAYES AVE, LOS ANGELES, CA 90042
5	549-203-1006	6427 LA RIBA WAY, LOS ANGELES, CA 90042
5	549-203-1005	6419 LA RIBA WAY, LOS ANGELES, CA 90042
5	549-203-1004	6417 LA RIBA WAY, LOS ANGELES, CA 90042
5	549-203-1003	6411 LA RIBA WAY, LOS ANGELES, CA 90042
5	549-203-1002	6407 LA RIBA WAY, LOS ANGELES, CA 90042
5	549-203-1001	6401 LA RIBA WAY, LOS ANGELES, CA 90042
5	549-203-1023	6416 LA RIBA WAY, LOS ANGELES, CA 90042
5	549-203-1022	6420 LA RIBA WAY, LOS ANGELES, CA 90042
5	549-203-1027	234 S. AVENUE 64, LOS ANGELES, CA 90042
5	549-203-1026	226 S. AVENUE 64, LOS ANGELES, CA 90042
5	549-203-1024	218 S. AVENUE 64, LOS ANGELES, CA 90042
5	549-203-1025	222 S. AVENUE 64, LOS ANGELES, CA 90042
5	549-203-1900	N/A
5	549-203-1031	N/A
5	549-203-1030	6432 LA RIBA WAY, LOS ANGELES, CA 90042
5	549-203-1028	6428 LA RIBA WAY, LOS ANGELES, CA 90042
5	549-203-2008	6323 ARROYO GLEN ST, LOS ANGELES, CA 90042
6	549-200-6018	5745 ARROYO DR, LOS ANGELES, CA 90042
6	549-200-5006	372 LESLIE WAY, LOS ANGELES, CA 90042
6	549-200-5018	384 LESLIE WAY, LOS ANGELES, CA 90042
6	549-200-6027	375 LESLIE WAY, LOS ANGELES, CA 90042
6	549-200-4026	5716 BENNER ST, LOS ANGELES, CA 90042
6	549-200-7008	5783 OMAHA ST, LOS ANGELES, CA 90042
6	549-201-9009	327 S. AVENUE 59, LOS ANGELES, CA 90042
6	549-201-9008	319 S. AVENUE 59, LOS ANGELES, CA 90042
6	549-201-9010	333 S. AVENUE 59, LOS ANGELES, CA 90042
6	549-201-9029	5909 ARROYO DR, LOS ANGELES, CA 90042
6	549-201-9015	5915 ARROYO DR, LOS ANGELES, CA 90042
6	549-201-9013	5901 ARROYO DR, LOS ANGELES, CA 90042
6	549-201-9014	5907 ARROYO DR, LOS ANGELES, CA 90042
6	549-200-9033	5847 ARROYO DR, LOS ANGELES, CA 90042
6	549-200-9034	5851 ARROYO DR, LOS ANGELES, CA 90042
6	549-200-9035	342 S. AVENUE 59, LOS ANGELES, CA 90042
6	549-200-9031	5837 ARROYO DR, LOS ANGELES, CA 90042
6	549-200-9030	5833 ARROYO DR, LOS ANGELES, CA 90042
6	549-201-9031	5930 BENNER ST, LOS ANGELES, CA 90042

APN Evacuation Table		
Evacuation Area #	APN #	Parcel Address
6	546-801-3062	5220 GLEN ELLEN PL, LOS ANGELES, CA 90042
6	546-801-3063	5224 GLEN ELLEN PL, LOS ANGELES, CA 90042
6	546-801-3060	5225 GLEN ELLEN PL, LOS ANGELES, CA 90042
6	546-801-3061	5210 GLEN ELLEN PL, LOS ANGELES, CA 90042
6	549-200-3010	5741 BENNER ST, LOS ANGELES, CA 90042
6	549-200-3009	5735 BENNER ST, LOS ANGELES, CA 90042
6	549-200-3006	5727 BENNER ST, LOS ANGELES, CA 90042
6	549-200-4027	211 S. AVENUE 57, LOS ANGELES, CA 90042
6	549-200-4015	5700 BENNER ST, LOS ANGELES, CA 90042
6	549-200-4016	5708 BENNER ST, LOS ANGELES, CA 90042
6	549-200-4025	5722 BENNER ST, LOS ANGELES, CA 90042
6	549-200-4024	5728 BENNER ST, LOS ANGELES, CA 90042
6	549-200-4022	5730 BENNER ST, LOS ANGELES, CA 90042
6	549-200-4012	223 S. AVENUE 57, LOS ANGELES, CA 90042
6	546-803-1900	N/A
6	546-803-1902	N/A
6	546-803-1011	250 S. AVENUE 57, LOS ANGELES, CA 90042
6	546-803-1012	254 S. AVENUE 57, LOS ANGELES, CA 90042
6	546-803-1010	244 S. AVENUE 57, LOS ANGELES, CA 90042
6	546-803-1016	227 S. AVENUE 56, LOS ANGELES, CA 90042
6	546-803-1018	219 S. AVENUE 56, LOS ANGELES, CA 90042
6	546-803-1017	221 S. AVENUE 56, LOS ANGELES, CA 90042
6	546-803-1015	233 S. AVENUE 56, LOS ANGELES, CA 90042
6	546-803-1014	237 S. AVENUE 56, LOS ANGELES, CA 90042
6	546-803-1030	260 S. AVENUE 57, LOS ANGELES, CA 90042
6	546-803-1028	305 S. AVENUE 56, LOS ANGELES, CA 90042
6	546-803-1026	310 S. AVENUE 57, LOS ANGELES, CA 90042
6	546-803-1025	312 S. AVENUE 57, LOS ANGELES, CA 90042
6	549-200-5022	303 S. AVENUE 57, LOS ANGELES, CA 90042
6	549-200-5005	368 LESLIE WAY, LOS ANGELES, CA 90042
6	549-200-5010	317 S. AVENUE 57, LOS ANGELES, CA 90042
6	549-200-3019	5733 BENNER ST, LOS ANGELES, CA 90042
6	549-200-9036	324 S. AVENUE 59, LOS ANGELES, CA 90042
6	549-200-9026	328 S. AVENUE 59, LOS ANGELES, CA 90042
6	549-200-9027	332 S. AVENUE 59, LOS ANGELES, CA 90042
6	549-200-9032	5841 ARROYO DR, LOS ANGELES, CA 90042
6	549-200-7011	5773 OMAHA ST, LOS ANGELES, CA 90042
6	549-200-7010	5779 OMAHA ST, LOS ANGELES, CA 90042
6	549-201-9036	374 SHULTS ST, LOS ANGELES, CA 90042
6	549-201-9028	5952 BENNER ST, LOS ANGELES, CA 90042
6	549-201-9032	5960 BENNER ST, LOS ANGELES, CA 90042
6	549-201-9038	5945 ARROYO DR, LOS ANGELES, CA 90042
6	549-201-9034	5941 ARROYO DR, LOS ANGELES, CA 90042
6	531-200-7900	N/A

APN Evacuation Table		
Evacuation Area #	APN #	Parcel Address
6	530-100-1900	N/A
6	549-201-9030	5938 BENNER ST, LOS ANGELES, CA 90042
6	549-200-7017	315 LESLIE WAY, LOS ANGELES, CA 90042
6	549-200-9028	5829 ARROYO DR, LOS ANGELES, CA 90042
6	549-200-7005	5817 ARROYO DR, LOS ANGELES, CA 90042
6	549-200-7003	5809 ARROYO DR, LOS ANGELES, CA 90042
6	549-200-7004	5811 ARROYO DR, LOS ANGELES, CA 90042
6	549-200-7002	5805 ARROYO DR, LOS ANGELES, CA 90042
6	549-200-7001	5787 OMAHA ST, LOS ANGELES, CA 90042
6	549-200-9029	5829 ARROYO DR, LOS ANGELES, CA 90042
6	549-200-7020	5747 OMAHA ST, LOS ANGELES, CA 90042
6	549-200-7019	323 LESLIE WAY, LOS ANGELES, CA 90042
6	549-200-4003	5719 OMAHA ST, LOS ANGELES, CA 90042
6	549-200-4004	5715 OMAHA ST, LOS ANGELES, CA 90042
6	549-200-7016	5749 OMAHA ST, LOS ANGELES, CA 90042
6	549-200-7022	5759 OMAHA ST, LOS ANGELES, CA 90042
6	549-200-7015	5753 OMAHA ST, LOS ANGELES, CA 90042
6	549-200-7021	5763 OMAHA ST, LOS ANGELES, CA 90042
6	549-200-7013	5767 OMAHA ST, LOS ANGELES, CA 90042
6	549-200-7012	5771 OMAHA ST, LOS ANGELES, CA 90042
6	549-200-7018	319 LESLIE WAY, LOS ANGELES, CA 90042
6	549-200-6003	5758 OMAHA ST, LOS ANGELES, CA 90042
6	549-200-6006	5750 OMAHA ST, LOS ANGELES, CA 90042
6	549-200-6007	5748 OMAHA ST, LOS ANGELES, CA 90042
6	549-200-6011	367 LESLIE WAY, LOS ANGELES, CA 90042
6	549-200-6008	5746 OMAHA ST, LOS ANGELES, CA 90042
6	549-200-6019	5765 ARROYO DR, LOS ANGELES, CA 90042
6	549-200-6025	5779 ARROYO DR, LOS ANGELES, CA 90042
6	549-200-6009	361 LESLIE WAY, LOS ANGELES, CA 90042
6	549-200-6012	371 LESLIE WAY, LOS ANGELES, CA 90042
6	549-200-6002	5762 OMAHA ST, LOS ANGELES, CA 90042
6	549-200-6023	5791 ARROYO DR, LOS ANGELES, CA 90042
6	549-200-6015	N/A
6	549-200-6010	363 LESLIE WAY, LOS ANGELES, CA 90042
6	549-200-6001	5764 OMAHA ST, LOS ANGELES, CA 90042
6	549-200-6024	5788 OMAHA ST, LOS ANGELES, CA 90042
6	549-200-6005	5752 OMAHA ST, LOS ANGELES, CA 90042
6	549-200-6017	5776 OMAHA ST, LOS ANGELES, CA 90042
6	546-801-3050	247 TERRACE 52, LOS ANGELES, CA 90042
6	546-801-3052	238 S. AVENUE 54, LOS ANGELES, CA 90042
6	546-801-3054	250 S. AVENUE 54, LOS ANGELES, CA 90042
6	546-801-3051	241 TERRACE 52, LOS ANGELES, CA 90042
6	546-801-3049	251 TERRACE 52, LOS ANGELES, CA 90042
6	546-801-3048	257 TERRACE 52, LOS ANGELES, CA 90042

APN Evacuation Table		
Evacuation Area #	APN #	Parcel Address
6	546-801-3059	274 S. AVENUE 54, LOS ANGELES, CA 90042
6	546-801-3053	246 S. AVENUE 54, LOS ANGELES, CA 90042
6	546-801-3083	260 S. AVENUE 54, LOS ANGELES, CA 90042
6	546-801-3047	261 TERRACE 52, LOS ANGELES, CA 90042
6	546-801-3055	256 S. AVENUE 54, LOS ANGELES, CA 90042
6	546-801-3058	270 S. AVENUE 54, LOS ANGELES, CA 90042
6	546-801-3045	281 S. AVENUE 52, LOS ANGELES, CA 90042
6	546-801-3043	226 S. AVENUE 54, LOS ANGELES, CA 90042
6	546-802-9026	406 S. AVENUE 56, LOS ANGELES, CA 90042
6	546-801-3005	224 S. AVENUE 55, LOS ANGELES, CA 90042
6	546-801-3068	5428 GLEN ELLEN PL, LOS ANGELES, CA 90042
6	546-801-3076	318 S. AVENUE 55, LOS ANGELES, CA 90042
6	546-801-3039	217 S. AVENUE 54, LOS ANGELES, CA 90042
6	546-802-8019	310 S. AVENUE 56, LOS ANGELES, CA 90042
6	546-802-8020	231 S. AVENUE 55, LOS ANGELES, CA 90042
6	546-802-9001	255 S. AVENUE 55, LOS ANGELES, CA 90042
6	546-801-3026	245 S. AVENUE 54, LOS ANGELES, CA 90042
6	546-801-3069	5422 GLEN ELLEN PL, LOS ANGELES, CA 90042
6	546-802-8011	232 S. AVENUE 56, LOS ANGELES, CA 90042
6	546-801-3028	231 S. AVENUE 54, LOS ANGELES, CA 90042
6	546-802-8028	211 S. AVENUE 55, LOS ANGELES, CA 90042
6	546-802-9032	317 S. AVENUE 55, LOS ANGELES, CA 90042
6	546-801-3001	N/A
6	546-802-8018	306 S. AVENUE 56, LOS ANGELES, CA 90042
6	546-802-9017	360 S. AVENUE 56, LOS ANGELES, CA 90042
6	546-802-9022	309 S. AVENUE 55, LOS ANGELES, CA 90042
6	546-801-3037	238 S. AVENUE 55, LOS ANGELES, CA 90042
6	546-801-3020	281 S. AVENUE 54, LOS ANGELES, CA 90042
6	546-802-9023	315 S. AVENUE 55, LOS ANGELES, CA 90042
6	546-801-3018	5411 GLEN ELLEN PL, LOS ANGELES, CA 90042
6	546-801-3065	5408 GLEN ELLEN PL, LOS ANGELES, CA 90042
6	546-801-3003	N/A
6	546-802-8015	302 S. AVENUE 56, LOS ANGELES, CA 90042
6	546-802-8022	314 S. AVENUE 56, LOS ANGELES, CA 90042
6	546-801-3008	242 S. AVENUE 55, LOS ANGELES, CA 90042
6	546-801-3021	279 S. AVENUE 54, LOS ANGELES, CA 90042
6	546-802-9005	265 S. AVENUE 55, LOS ANGELES, CA 90042
6	546-801-3071	5412 GLEN ELLEN PL, LOS ANGELES, CA 90042
6	546-802-8027	249 S. AVENUE 55, LOS ANGELES, CA 90042
6	546-802-9020	301 S. AVENUE 55, LOS ANGELES, CA 90042
6	546-801-3011	260 S. AVENUE 55, LOS ANGELES, CA 90042
6	546-801-3067	310 S. AVENUE 55, LOS ANGELES, CA 90042
6	546-801-3900	N/A
6	546-802-9025	400 S. AVENUE 56, LOS ANGELES, CA 90042

APN Evacuation Table		
Evacuation Area #	APN #	Parcel Address
6	546-801-3034	203 S. AVENUE 54, LOS ANGELES, CA 90042
6	546-802-9031	424 N. AVENUE 56, LOS ANGELES, CA 90042
6	546-801-3010	258 S. AVENUE 55, LOS ANGELES, CA 90042
6	546-801-3012	264 S. AVENUE 55, LOS ANGELES, CA 90042
6	546-801-3033	207 S. AVENUE 54, LOS ANGELES, CA 90042
6	546-802-9028	414 S. AVENUE 56, LOS ANGELES, CA 90042
6	546-801-3016	280 S. AVENUE 55, LOS ANGELES, CA 90042
6	546-802-8029	224 S. AVENUE 56, LOS ANGELES, CA 90042
6	546-802-9027	410 S. AVENUE 56, LOS ANGELES, CA 90042
6	546-801-3064	5400 GLEN ELLEN PL, LOS ANGELES, CA 90042
6	546-802-9014	273 S. AVENUE 55, LOS ANGELES, CA 90042
6	546-801-3019	5407 GLEN ELLEN PL, LOS ANGELES, CA 90042
6	546-801-3029	227 S. AVENUE 54, LOS ANGELES, CA 90042
6	546-802-9002	330 S. AVENUE 56, LOS ANGELES, CA 90042
6	546-801-3004	216 S. AVENUE 55, LOS ANGELES, CA 90042
6	546-801-3032	211 S. AVENUE 54, LOS ANGELES, CA 90042
6	546-801-3077	330 S. AVENUE 55, LOS ANGELES, CA 90042
6	546-802-8010	234 S. AVENUE 56, LOS ANGELES, CA 90042
6	546-802-9011	350 S. AVENUE 56, LOS ANGELES, CA 90042
6	546-802-8021	237 S. AVENUE 55, LOS ANGELES, CA 90042
6	546-802-9004	332 S. AVENUE 56, LOS ANGELES, CA 90042
6	546-802-9019	287 S. AVENUE 55, LOS ANGELES, CA 90042
6	546-802-8016	221 S. AVENUE 55, LOS ANGELES, CA 90042
6	546-801-3013	268 S. AVENUE 55, LOS ANGELES, CA 90042
6	546-802-9021	303 S. AVENUE 55, LOS ANGELES, CA 90042
6	546-801-3024	259 S. AVENUE 54, LOS ANGELES, CA 90042
6	546-802-9018	279 S. AVENUE 55, LOS ANGELES, CA 90042
6	546-801-3015	278 S. AVENUE 55, LOS ANGELES, CA 90042
6	546-801-3009	250 S. AVENUE 55, LOS ANGELES, CA 90042
6	546-802-9029	418 S. AVENUE 56, LOS ANGELES, CA 90042
6	546-801-3002	206 S. AVENUE 55, LOS ANGELES, CA 90042
6	546-802-8017	225 S. AVENUE 55, LOS ANGELES, CA 90042
6	546-801-3025	249 S. AVENUE 54, LOS ANGELES, CA 90042
6	546-802-9006	340 S. AVENUE 56, LOS ANGELES, CA 90042
6	546-802-9012	269 S. AVENUE 55, LOS ANGELES, CA 90042
6	546-801-3017	5423 GLEN ELLEN PL, LOS ANGELES, CA 90042
6	546-801-3006	228 S. AVENUE 55, LOS ANGELES, CA 90042
6	546-801-3023	261 S. AVENUE 54, LOS ANGELES, CA 90042
6	546-802-9003	261 S. AVENUE 55, LOS ANGELES, CA 90042
6	546-801-3070	5416 GLEN ELLEN PL, LOS ANGELES, CA 90042
6	546-801-3027	237 S. AVENUE 54, LOS ANGELES, CA 90042
6	546-802-9013	352 S. AVENUE 56, LOS ANGELES, CA 90042
6	546-802-9015	356 S. AVENUE 56, LOS ANGELES, CA 90042
6	546-801-3014	274 S. AVENUE 55, LOS ANGELES, CA 90042

APN Evacuation Table		
Evacuation Area #	APN #	Parcel Address
6	546-801-3038	236 S. AVENUE 55, LOS ANGELES, CA 90042
6	546-801-3022	263 S. AVENUE 54, LOS ANGELES, CA 90042
6	546-802-9016	277 S. AVENUE 55, LOS ANGELES, CA 90042
6	546-803-1029	301 S. AVENUE 56, LOS ANGELES, CA 90042
6	546-803-1027	311 S. AVENUE 56, LOS ANGELES, CA 90042
6	546-803-0022	411 S. AVENUE 56, LOS ANGELES, CA 90042
6	546-803-0010	331 S. AVENUE 56, LOS ANGELES, CA 90042
6	546-803-0031	326 S. AVENUE 57, LOS ANGELES, CA 90042
6	546-803-0018	5704 VIA MARISOL, LOS ANGELES, CA 90042
6	546-803-0004	321 S. AVENUE 56, LOS ANGELES, CA 90042
6	546-803-0019	5708 VIA MARISOL, LOS ANGELES, CA 90042
6	546-803-0011	344 S. AVENUE 57, LOS ANGELES, CA 90042
6	546-803-0016	350 S. AVENUE 57, LOS ANGELES, CA 90042
6	546-803-0008	327 S. AVENUE 56, LOS ANGELES, CA 90042
6	546-803-0025	5705 VIA MARISOL, LOS ANGELES, CA 90042
6	546-803-0013	346 S. AVENUE 57, LOS ANGELES, CA 90042
6	546-803-0032	5609 CARLOTA BLVD, LOS ANGELES, CA 90042
6	546-803-0012	341 S. AVENUE 56, LOS ANGELES, CA 90042
6	546-803-0017	360 S. AVENUE 57, LOS ANGELES, CA 90042
6	546-803-0015	348 S. AVENUE 57, LOS ANGELES, CA 90042
6	546-803-0006	325 S. AVENUE 56, LOS ANGELES, CA 90042
6	546-803-0023	5713 VIA MARISOL, LOS ANGELES, CA 90042
6	546-803-0030	415 S. AVENUE 56, LOS ANGELES, CA 90042
6	546-803-0020	5712 VIA MARISOL, LOS ANGELES, CA 90042
6	546-803-0026	5701 VIA MARISOL, LOS ANGELES, CA 90042
6	546-803-0021	5717 VIA MARISOL, LOS ANGELES, CA 90042
6	546-803-0007	330 S. AVENUE 57, LOS ANGELES, CA 90042
6	546-803-0024	5709 VIA MARISOL, LOS ANGELES, CA 90042
6	546-803-0009	334 S. AVENUE 57, LOS ANGELES, CA 90042
6	546-803-0028	5621 CARLOTA BLVD, LOS ANGELES, CA 90042
6	546-803-0014	345 S. AVENUE 56, LOS ANGELES, CA 90042
6	546-803-0027	404 S. AVENUE 57, LOS ANGELES, CA 90042
6	546-803-0001	314 S. AVENUE 57, LOS ANGELES, CA 90042
6	546-803-0002	317 S. AVENUE 56, LOS ANGELES, CA 90042
6	549-200-5012	323 S. AVENUE 57, LOS ANGELES, CA 90042
6	549-200-5011	319 S. AVENUE 57, LOS ANGELES, CA 90042
6	549-200-5017	376 LESLIE WAY, LOS ANGELES, CA 90042
6	549-200-5024	329 S. AVENUE 57, LOS ANGELES, CA 90042
6	549-200-5023	327 S. AVENUE 57, LOS ANGELES, CA 90042
6	549-200-5021	331 S. AVENUE 57, LOS ANGELES, CA 90042
6	549-200-5015	335 S. AVENUE 57, LOS ANGELES, CA 90042
6	549-200-5020	5698 VIA MARISOL, LOS ANGELES, CA 90042
6	549-200-5019	390 LESLIE WAY, LOS ANGELES, CA 90042
6	546-801-3066	5432 GLEN ELLEN PL, LOS ANGELES, CA 90042

APN Evacuation Table		
Evacuation Area #	APN #	Parcel Address
6	549-200-4084	241 S. AVENUE 57, APT 0110, LOS ANGELES, CA 90042
6	549-200-4121	241 S. AVENUE 57, APT 0213, LOS ANGELES, CA 90042
6	549-200-4078	241 S. AVENUE 57, APT 0104, LOS ANGELES, CA 90042
6	549-200-4096	241 S. AVENUE 57, APT 0122, LOS ANGELES, CA 90042
6	549-200-4091	241 S. AVENUE 57, APT 0117, LOS ANGELES, CA 90042
6	549-200-4106	241 S. AVENUE 57, APT 0132, LOS ANGELES, CA 90042
6	549-200-4115	241 S. AVENUE 57, APT 0207, LOS ANGELES, CA 90042
6	549-200-4080	241 S. AVENUE 57, APT 0106, LOS ANGELES, CA 90042
6	549-200-4090	241 S. AVENUE 57, APT 0116, LOS ANGELES, CA 90042
6	549-200-4103	241 S. AVENUE 57, APT 0129, LOS ANGELES, CA 90042
6	549-200-4104	241 S. AVENUE 57, APT 0130, LOS ANGELES, CA 90042
6	549-200-4077	241 S. AVENUE 57, APT 0102, LOS ANGELES, CA 90042
6	549-200-4101	241 S. AVENUE 57, APT 0127, LOS ANGELES, CA 90042
6	549-200-4112	241 S. AVENUE 57, APT 0204, LOS ANGELES, CA 90042
6	549-200-4079	241 S. AVENUE 57, APT 0105, LOS ANGELES, CA 90042
6	549-200-4089	241 S. AVENUE 57, APT 0115, LOS ANGELES, CA 90042
6	549-200-4086	241 S. AVENUE 57, APT 0112, LOS ANGELES, CA 90042
6	549-200-4117	241 S. AVENUE 57, APT 0209, LOS ANGELES, CA 90042
6	549-200-4122	241 S. AVENUE 57, APT 0214, LOS ANGELES, CA 90042
6	549-200-4113	241 S. AVENUE 57, APT 0205, LOS ANGELES, CA 90042
6	549-200-4120	241 S. AVENUE 57, APT 0212, LOS ANGELES, CA 90042
6	549-200-4099	241 S. AVENUE 57, APT 0125, LOS ANGELES, CA 90042
6	549-200-4095	241 S. AVENUE 57, APT 0121, LOS ANGELES, CA 90042
6	549-200-4116	241 S. AVENUE 57, APT 0208, LOS ANGELES, CA 90042
6	549-200-4088	241 S. AVENUE 57, APT 0114, LOS ANGELES, CA 90042
6	549-200-4105	241 S. AVENUE 57, APT 131, LOS ANGELES, CA 90042
6	549-200-4087	241 S. AVENUE 57, APT 0113, LOS ANGELES, CA 90042
6	549-200-4085	241 S. AVENUE 57, APT 111, LOS ANGELES, CA 90042
6	549-200-4118	241 S. AVENUE 57, APT 0210, LOS ANGELES, CA 90042
6	549-200-4119	241 S. AVENUE 57, APT 0211, LOS ANGELES, CA 90042
6	549-200-4111	241 S. AVENUE 57, APT 0203, LOS ANGELES, CA 90042
6	549-200-4076	241 S. AVENUE 57, APT 0101, LOS ANGELES, CA 90042
6	549-200-4108	241 S. AVENUE 57, APT 0134, LOS ANGELES, CA 90042
6	549-200-4094	241 S. AVENUE 57, APT 0120, LOS ANGELES, CA 90042
6	549-200-4114	241 S. AVENUE 57, APT 0206, LOS ANGELES, CA 90042
6	549-200-4082	241 S. AVENUE 57, APT 0108, LOS ANGELES, CA 90042
6	549-200-4107	241 S. AVENUE 57, APT 0133, LOS ANGELES, CA 90042
6	549-200-4110	241 S. AVENUE 57, APT 0202, LOS ANGELES, CA 90042
6	549-200-4109	241 S. AVENUE 57, APT 0201, LOS ANGELES, CA 90042
6	549-200-4081	241 S. AVENUE 57, APT 0107, LOS ANGELES, CA 90042
6	549-200-4098	241 S. AVENUE 57, APT 0124, LOS ANGELES, CA 90042
6	549-200-4100	241 S. AVENUE 57, APT 0126, LOS ANGELES, CA 90042
6	549-200-4093	241 S. AVENUE 57, APT 0119, LOS ANGELES, CA 90042
6	549-200-4092	241 S. AVENUE 57, APT 118, LOS ANGELES, CA 90042

APN Evacuation Table		
Evacuation Area #	**APN #**	**Parcel Address**
6	549-200-4083	241 S. AVENUE 57, APT 0109, LOS ANGELES, CA 90042
6	549-200-4097	241 S. AVENUE 57, APT 0123, LOS ANGELES, CA 90042
6	549-200-4102	241 S. AVENUE 57, APT 0128, LOS ANGELES, CA 90042

Appendix B

Evacuation Areas

B.1 Evacuation Area Detailed Map 1

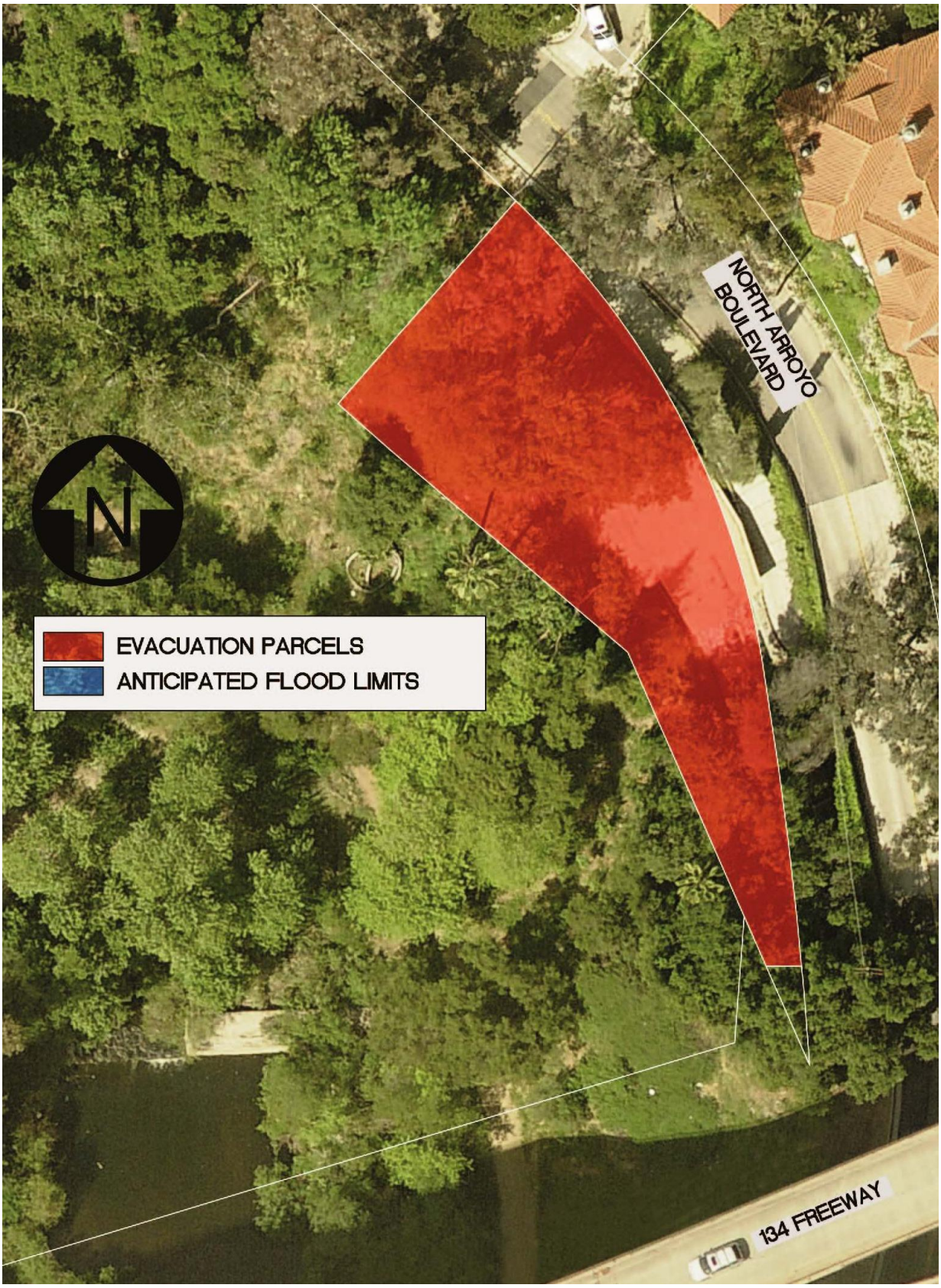

Per information in the previously performed hydraulic analysis, potential negative flooding effects are anticipated for a residential structure adjacent to this unimproved section of the Arroyo Seco Channel. The residential structure appears to have been constructed within the natural boundaries of the Arroyo Seco Channel and may be subject to flooding without the channel being overtopped. Potentially threatening flood conditions are anticipated for this structure when the channel reaches a flow rate of approximately 11,000 cfs.

Given that the structure is located within the natural boundaries of the channel, flood delineations are not depicted in the figure on the previous page; however, examination of the water surface elevations generated in the previous hydraulic analysis indicate that when the maximum anticipated Capital Flood Event flow rate of 18,352 cfs is reached in this location, the structure may be inundated to a depth of approximately 3.6'.

One (1) parcel with a residential structure was identified to be within the anticipated flood limits depicted in Evacuation Area Detailed Map 1. In order to provide a flood warning time of eight-hours for this evacuation area, flood response efforts should commence when the water surface elevation at the Devils Gate Dam reaches an elevation of 1069.7' during a Capital Flood Event. Specific information about this parcel, including the Assessor Parcel Number and Address, is located in Appendix A of this report.

B.2 Evacuation Area Detailed Map 2

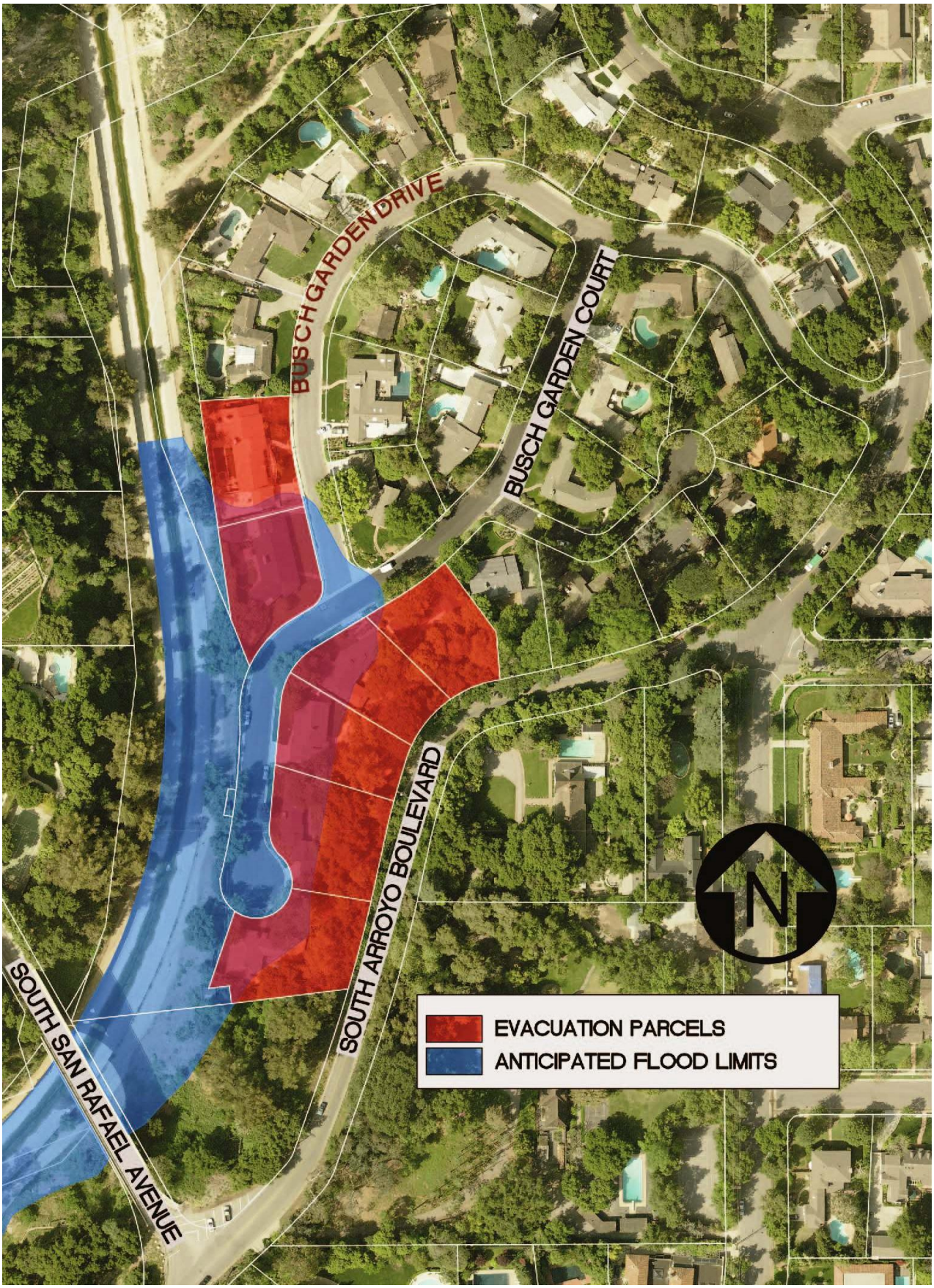

Per information in the previously performed hydraulic analysis, potential negative flooding effects are anticipated for several residential streets and structures adjacent to the Arroyo Seco Channel in Evacuation Area Detailed Map 2. Overtopping of the existing Arroyo Seco Channel in this area begins when the channel reaches a flow rate of approximately 13,800 cfs. When the maximum anticipated Capital Flood Event flow rate of 18,474 cfs is reached in this location, the maximum water surface elevation anticipated is 2.3' above the top of the left channel bank.

Seven (7) parcels with residential structures were identified to be within the anticipated flood limits depicted in Evacuation Area Detailed Map 2. In order to provide a flood warning time of eight-hours for this evacuation area, flood response efforts should commence when the water surface elevation at the Devils Gate Dam reaches an elevation of 1070.0' during a Capital Flood Event. Specific information about these parcels, including Assessor Parcel Numbers and Addresses, is located in Appendix A of this report.

B.3 Evacuation Area Detailed Map 3

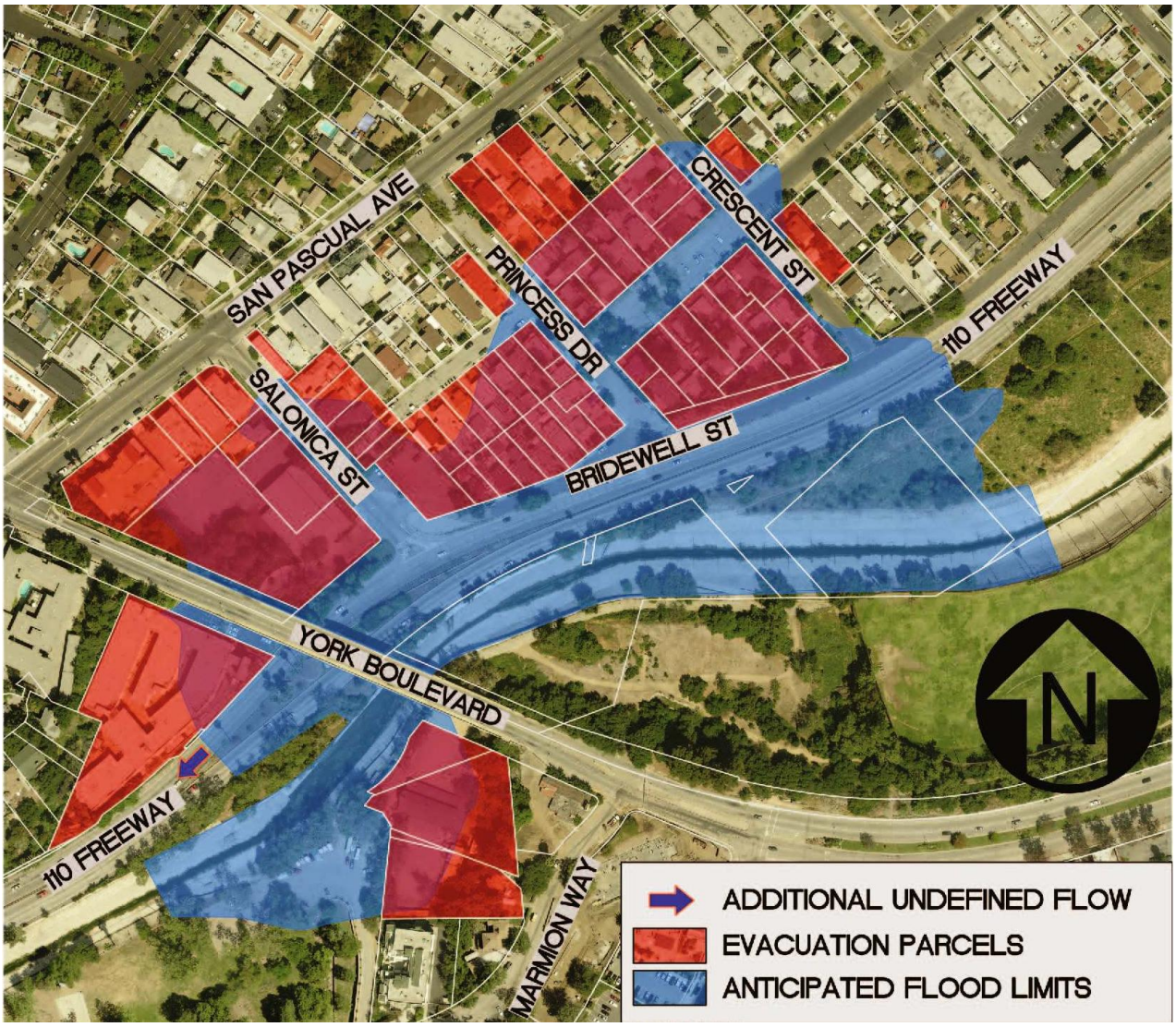

Per information in the previously performed hydraulic analysis, potential negative flooding effects are anticipated for the 110 Freeway as well as several residential streets and structures adjacent to the Arroyo Seco Channel in Evacuation Area Detailed Map 3. A portion of the overtopping flow is anticipated to continue flowing down the 110 Freeway but is not anticipated to negatively affect additional structures. Overtopping of the existing Arroyo Seco Channel in this area begins when the channel reaches a flow rate of approximately 5,600 cfs. When the maximum anticipated Capital Flood Event flow rate of 18,818 cfs is reached in this location, the maximum water surface elevation anticipated is 6.0' above the top of the right channel bank and 4.8' above the top of the left channel bank.

Sixty-two (62) parcels with residential or commercial structures were identified to be within the anticipated flood limits depicted in Evacuation Area Detailed Map 3. In order to provide a flood warning time of eight-hours for this evacuation area, flood response efforts should commence when the water surface elevation at the Devils Gate Dam reaches an elevation of 1069.5' during a Capital Flood Event. Specific information about these parcels, including Assessor Parcel Numbers and Addresses, is located in Appendix A of this report.

B.4 Evacuation Area Detailed Map 4

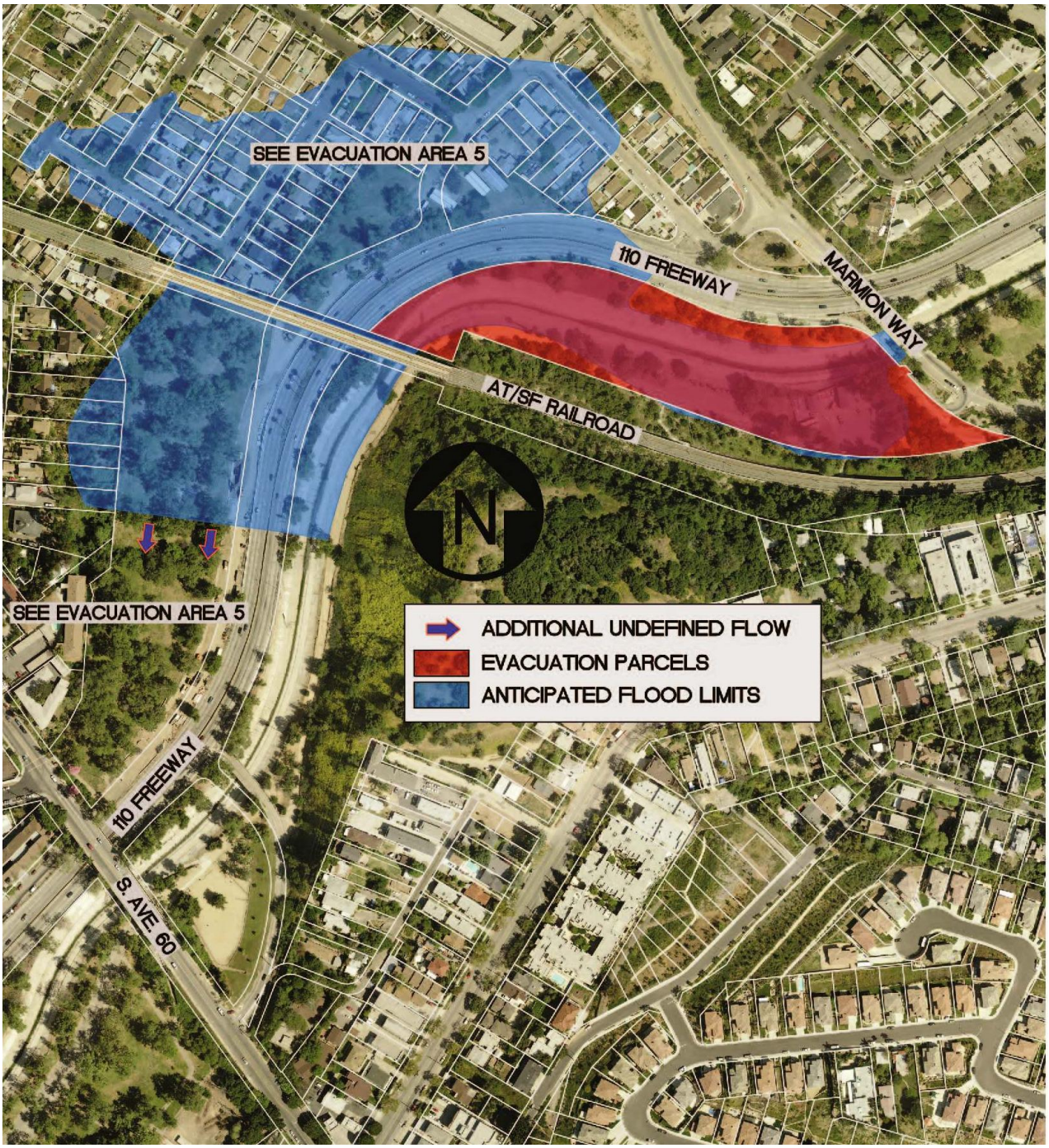

Per information in the previously performed hydraulic analysis, potential negative flooding effects are anticipated for a single structure adjacent to the Arroyo Seco Channel in Evacuation Area Detailed Map 4. Overtopping of the existing Arroyo Seco Channel in this area begins when the channel reaches a flow rate of approximately 12,200 cfs. When the maximum anticipated Capital Flood Event flow rate of 18,818 cfs is reached in this location, the maximum water surface elevation anticipated is 4.8’ above the top of the left channel bank.

One (1) parcel with a structure was identified to be within the anticipated flood limits depicted in Evacuation Area Detailed Map 4. In order to provide a flood warning time of eight-hours for this evacuation area, flood response efforts should commence when the water surface elevation at the Devils Gate Dam reaches an elevation of 1069.8’ during a Capital Flood Event. Specific information about this parcel, including the Assessor Parcel Number and Address, is located in Appendix A of this report.

B.5 Evacuation Area Detailed Map 5

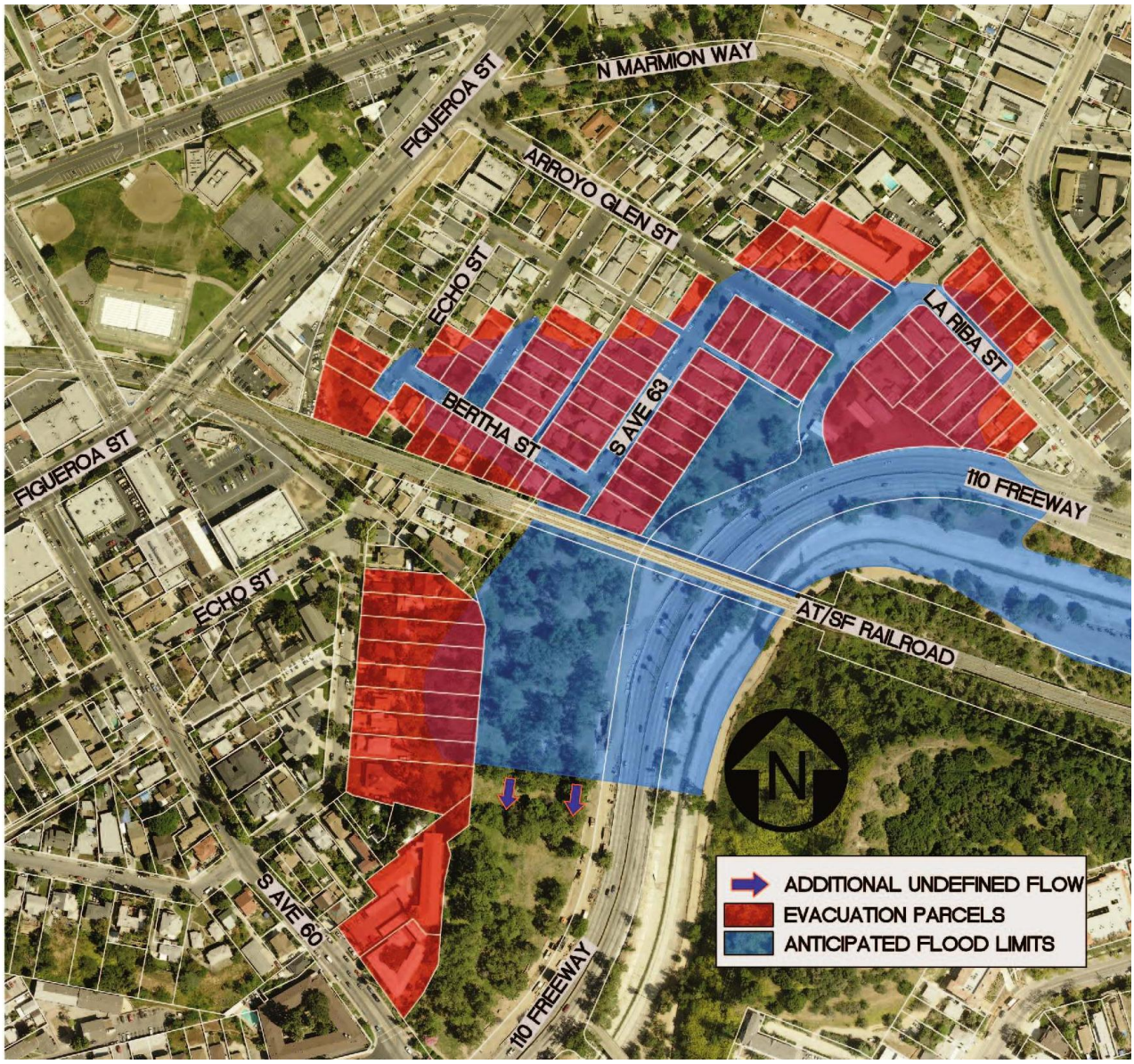

Per information in the previously performed hydraulic analysis, potential negative flooding effects are anticipated for the 110 Freeway as well as several residential streets and structures adjacent to the Arroyo Seco Channel in Evacuation Area Detailed Map 5. A portion of the flow is anticipated to continue down the 110 Freeway and adjacent natural area, but is not anticipated to negatively affect additional structures. Overtopping of the existing Arroyo Seco Channel in this area begins when the channel reaches a flow rate of approximately 8,700 cfs. When the maximum anticipated Capital Flood Event flow rate of 18,818 cfs is reached in this location, the maximum water surface elevation anticipated is 4.1' above the top of the right channel bank.

Eighty-six (86) parcels with residential or commercial structures were identified to be within the anticipated flood limits depicted in Evacuation Area Detailed Map 5. In order to provide a flood warning time of eight-hours for this evacuation area, flood response efforts should commence when the water surface elevation at the Devils Gate Dam reaches an elevation of 1069.7' during a Capital Flood Event. Specific information about these parcels, including Assessor Parcel Numbers and Addresses, is located in Appendix A of this report.

B.6 Evacuation Area Detailed Map 6

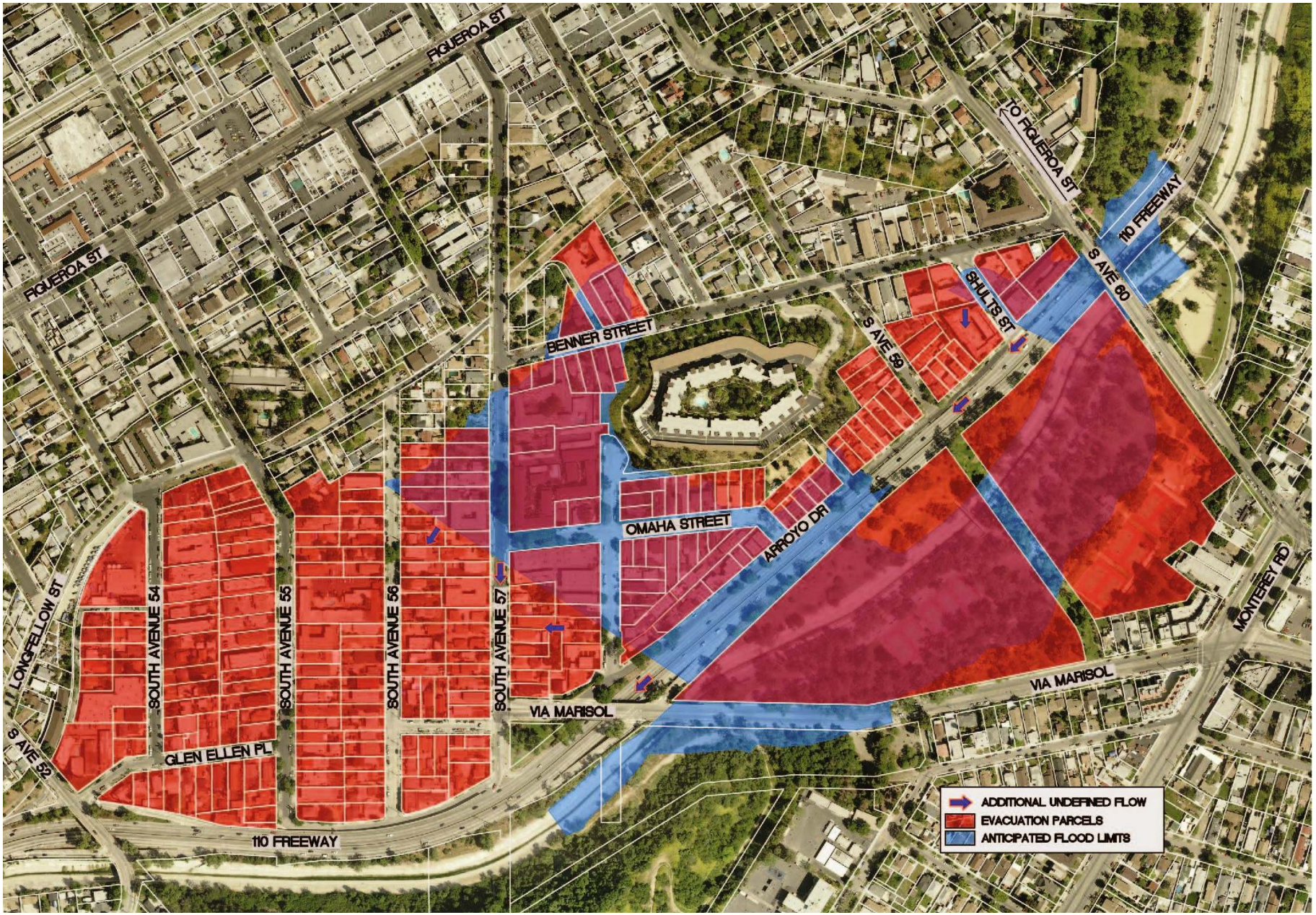

Per information in the previously performed hydraulic analysis, potential negative flooding effects are anticipated for the 110 Freeway as well as several residential streets and structures adjacent to the Arroyo Seco Channel in Evacuation Area Detailed Map 6. Overtopping of the existing Arroyo Seco Channel in this area begins when the channel reaches a flow rate of approximately 8,700 cfs. When the maximum anticipated Capital Flood Event flow rate of 18,818 cfs is reached in this location, the maximum water surface elevation anticipated is 6.2' above the top of the left and right channel banks.

Two-Hundred-Eighty-Six (286) parcels with residential or commercial structures were identified to be within the anticipated flood limits depicted in Evacuation Area Detailed Map 6. In order to provide a flood warning time of eight-hours for this evacuation area, flood response efforts should commence when the water surface elevation at the Devils Gate Dam reaches an elevation of 1069.7' during a Capital Flood Event. Specific information about these parcels, including Assessor Parcel Numbers and Addresses, is located in Appendix A of this report.

This page is intentionally left blank to facilitate 2-sided printing.

Appendix C

110 Freeway Closure

This page is intentionally left blank to facilitate 2-sided printing.

C.1 110 Freeway Closure

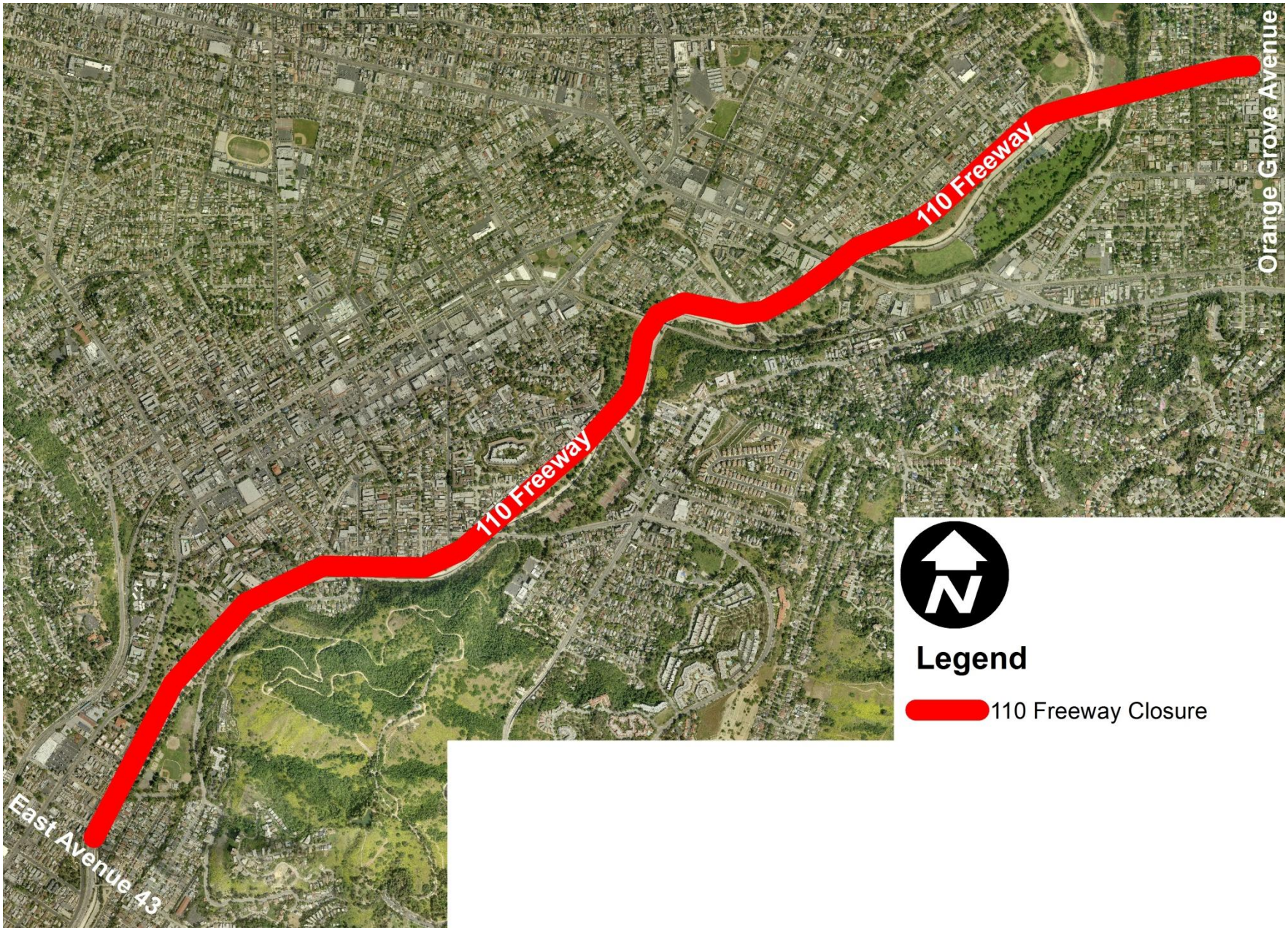

Per information in the previously performed hydraulic analysis, potential negative flooding effects are anticipated along several portions of the 110 Freeway. In order to protect motorists from these flooding impacts, CALTRANS should coordinate the temporary closure of the 110 Freeway between East Avenue 43 and Orange Grove Avenue as illustrated by the red line work on the previous page.

All 110 Freeway onramps between East Avenue 43 and Orange Avenue should be temporarily closed during overtopping events generated by the Capital Flood Event. Onramp closures at the extreme east and west ends of the 110 Freeway closure (East Avenue 43 and Orange Grove Avenue) are illustrated in the pages that follow. Additional onramp closures located between East Avenue 43 and Orange Grove Avenue are illustrated in Appendix B of this report.

C.2 East Avenue 43 – 110 Freeway Onramp Closure

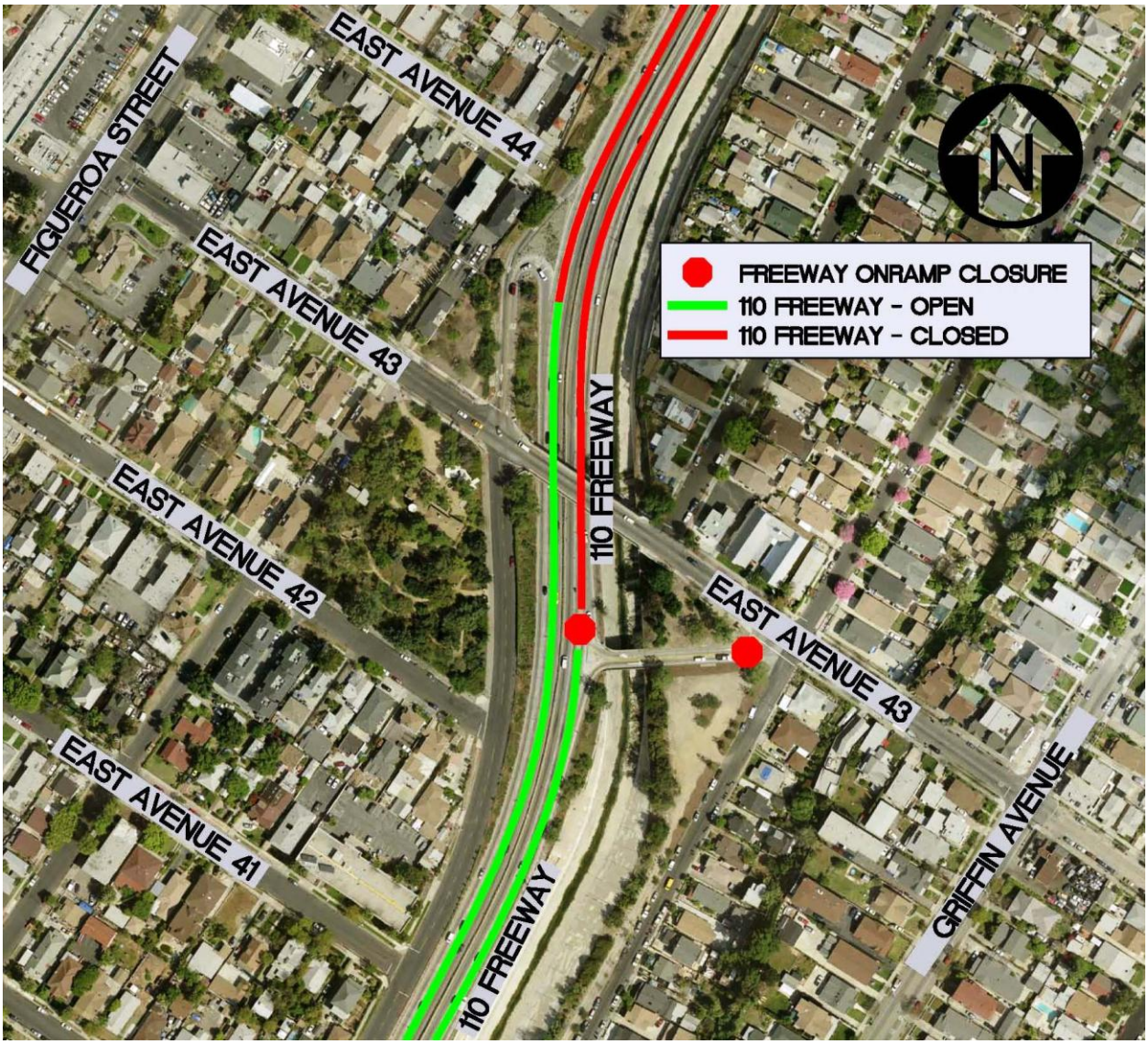

C.3 Orange Grove Avenue – 100 Freeway Onramp Closure

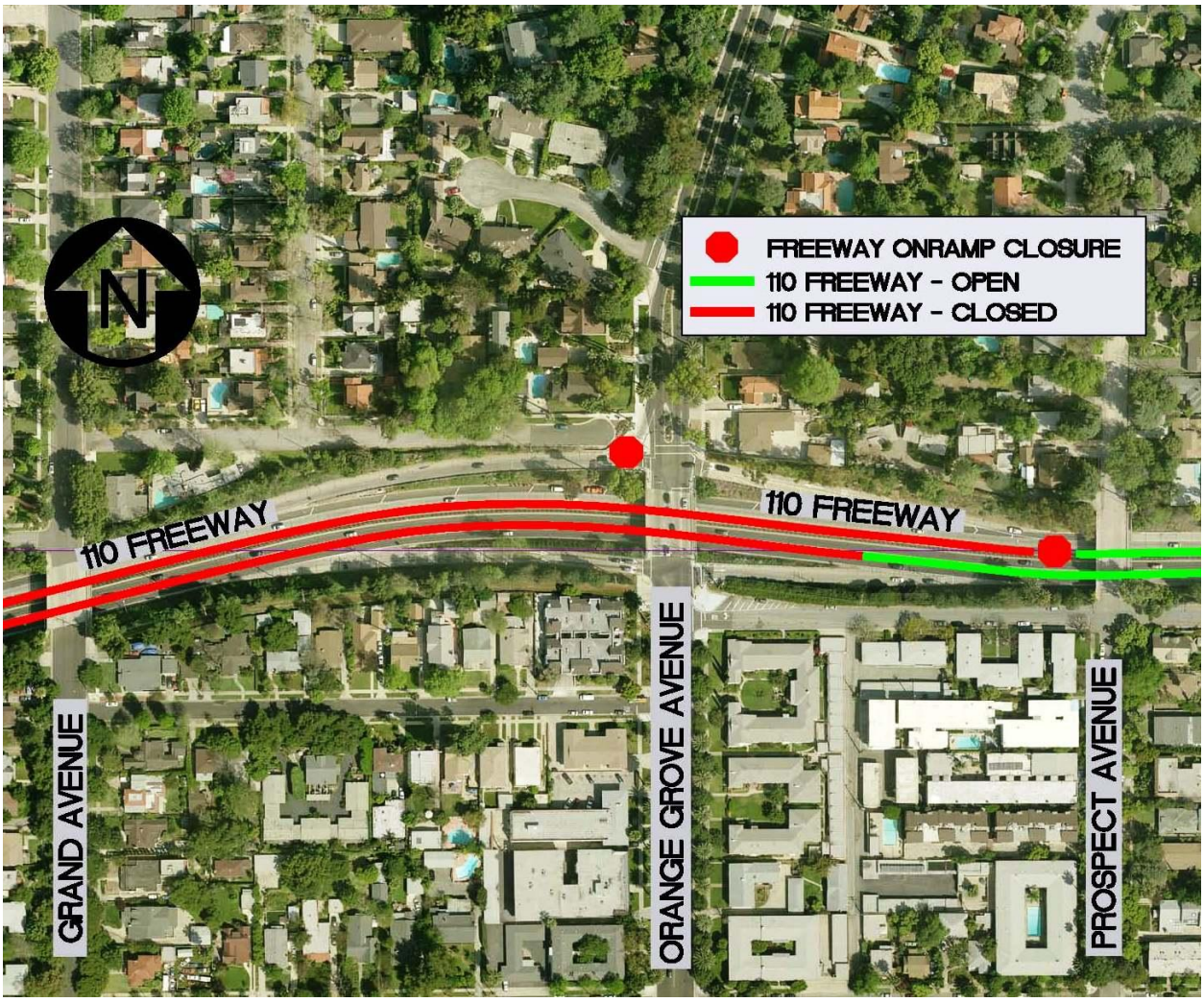

Appendix D

Recognizing Flood Conditions

This page is intentionally left blank to facilitate 2-sided printing.

D.1. Recognizing Flood Conditions

In order to facilitate the execution of appropriate flood response efforts, it is necessary to have a system capable of recognizing conditions that are anticipated to generate flooding in a manner that allows for action to be taken before the flooding begins. Per discussions held with the Los Angeles County Department of Public Works, it has been determined that a system capable of recognizing potential flood conditions at 8-hours, 4-hours, and 1-hour prior to channel overtopping is adequate for this Flood Hazard Warning and Contingency Plan.

Through analysis of the previously performed hydrologic and hydraulic analyses, a system that associates overtopping flow rates at each identified evacuation area with water surface elevations occurring behind the Devils Gate Dam 8-hours, 4-hours, and 1-hour prior to downstream channel overtopping has been developed. This association will allow for conditions associated with anticipated Capital Flood Event flooding to be identified from a single observation point at the Devils Gate Dam.

D.2. Associating Evacuation Areas with Appropriate HEC-RAS and WMS Data

Developing this system required a substantial amount of information associated with the previously performed hydrologic and hydraulic analyses. Before information from these previous analyses could be appropriately applied to each identified evacuation area, it was necessary to associate each evacuation area with the appropriate HEC-RAS channel station and WMS outlet node. This association was performed by utilizing aerial imagery to relate the evacuation areas and WMS outlet nodes to the georeferenced HEC-RAS model. With each evacuation area now associated with a HEC-RAS channel station as well as a WMS outlet node, the necessary information required from the hydrologic and hydraulic analyses could be applied to the evacuation areas.

D.3. Identifying Overtopping Flow Rates at Evacuation Areas

In developing a system capable of recognizing potential flood conditions, it was necessary to identify the flow rates at which channel overtopping occurs for each identified evacuation area. These overtopping flow rates represent the minimum flow rate that causes overtopping of the channel in a particular evacuation area. These overtopping flow rates have been determined per information obtained from the previously performed hydraulic analysis.

D.4. Examination of WMS Hydrographs at Evacuation Areas

With the established overtopping flow rates as well as the associated WMS outlet nodes identified for each evacuation area, WMS Hydrographs associated with each evacuation area were examined in order to identify the time at which overtopping flow occurs. These WMS hydrographs were determined per information obtained from the previously performed hydrologic analysis.

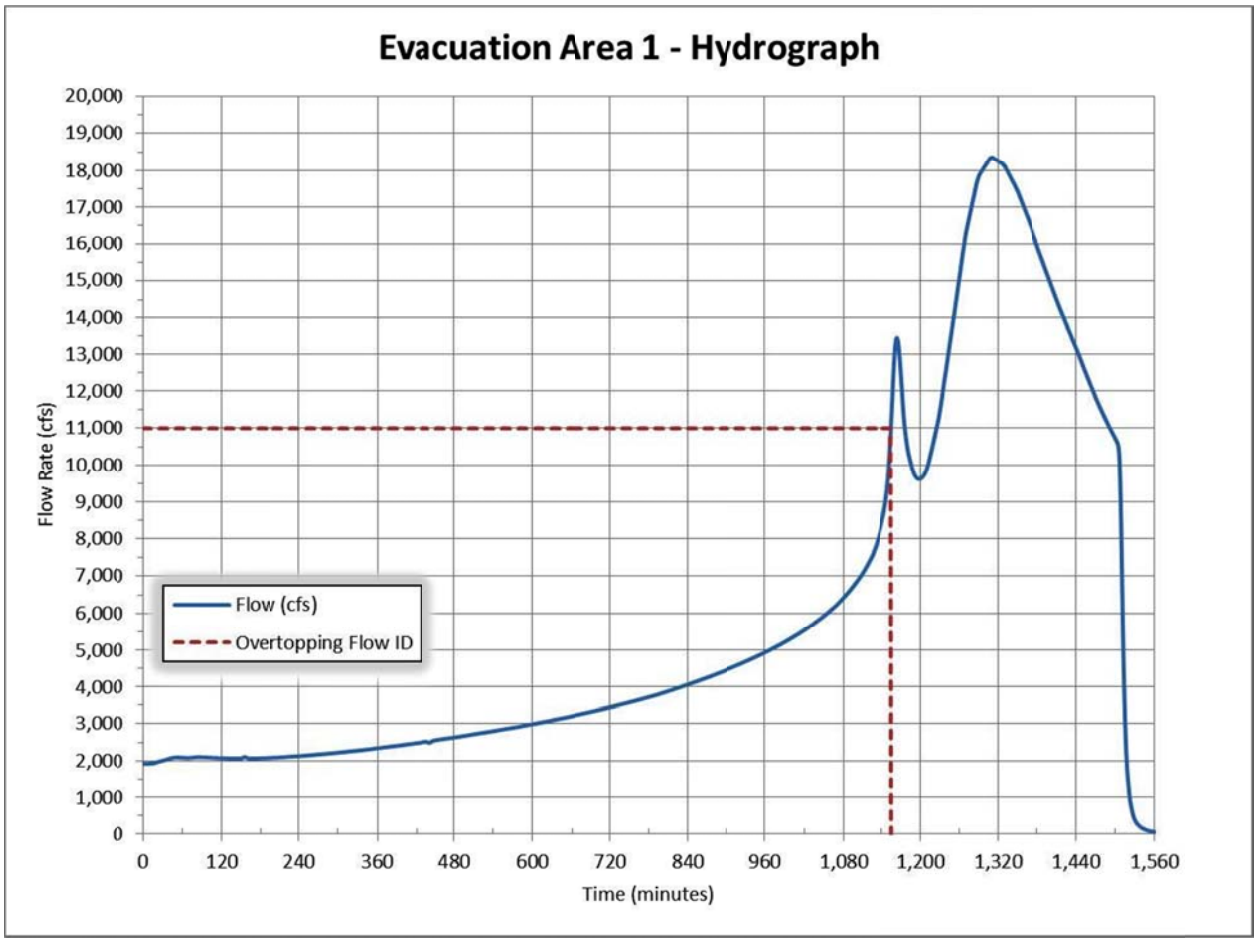

Example: In the Evacuation Area 1 excerpt above, it can be seen that the overtopping flow of 11,000 cfs occurs at the 1155th minute of the 4th day Capital Flood Event.

D.5. Travel Time from Dam Outlet to Evacuation Area

Because the monitoring point for the flood recognition system is located at the upstream Devils Gate Dam, it was necessary to relate the time at which overtopping flow occurs at the evacuation area with the time at which the overtopping flow is released from the Dam. These times have been related by examining travel time information from the previously performed hydraulic analysis. These travel times reflect the travel times for the peak flow of the Capital Flood Event between the Dam Outlet and identified evacuation areas.

Example: For Evacuation Area 1, the travel time from the Dam outlet to the evacuation area was calculated at 8 minutes; therefore, the flow released by the Dam outlet at 1147 minutes corresponds to the Evacuation Area 1 overtopping flow of 11,000 cfs that occurs at 1155 minutes.

In order to provide the necessary flood warning time of 8-hours, 4-hours, and 1-hour to each evacuation area, the time at which observation of water surface elevations behind the Dam need to be observed was further modified by the formula below.

Time at Dam Outlet = Time Overtopping Flow Occurs + Travel Time – Desired Warning Time

Example: For Evacuation Area 1, this formula reads as follows

8-hr Warning: 683 minutes = 1155 minutes + 8 minutes - 480 minutes
4-hr Warning: 923 minutes = 1155 minutes + 8 minutes - 240 minutes
1-hr Warning: 1103 minutes = 1155 minutes + 8 minutes - 60 minutes

D.6. Time vs Water Surface Elevation Behind Devils Gate Dam

With overtopping flows for each evacuation area now associated with a specific time at the upstream Devils Gate Dam, a Time vs Water Surface Elevation Behind Devils Gate Dam relationship can be established through examination of the Dam Outflow hydrograph from the previous hydrologic study. This relationship allows for potential flood conditions to be linked to water surface elevations behind the Devils Gate Dam. The pages that follow include a table of the Flood Recognition Calculations as well as a Time vs Water Surface Elevation Behind Devils Gate Dam Graph which were utilized to develop this system.

8 Hour Warning - Flood Recognition Calculations

HEC-RAS Information				WMS Information		Dam Condition for 8 Hour Warning		
[1] Evacuation Area	[2] Minimum Overtopping Flow (cfs)	[3] Associated HEC-RAS Channel Station	[4] Travel Time from Dam Outlet to HEC-RAS Station (minutes)	[5] Associated WMS Outlet Node	[6] Time Overtopping Flow Occurs at WMS Node (minutes)	[7] Desired Warning Time (minutes)	[8] Time at Dam Outlet (minutes)	[9] Associated Water Surface Elevation at Devils Gate Dam (ft)
1	11,000	2801.33	8	Lower 1 - 194A	1,155	480	683	1,069.7'
2	13,800	2573.52	12	Lower 2 - 27CD	1,250	480	782	1,070.0'
3	5,600	2153	16	Lower 2 - 58AH	995	480	531	1,069.5'
4	12,200	1816.66	17	Lower 2 - 73AJ	1,155	480	692	1,069.8'
5	8,700	1755	18	Lower 2 - 73AJ	1,130	480	668	1,069.7'
6	8,700	1530	19	Lower 2 - 91AK	1,125	480	664	1,069.7'

1. Evacuation Areas have been identified as areas of Channel overtopping that threaten existing residential or commercial structures. It is recommended these areas be
2. The minimum overtopping flow represents the minimum flow rate that causes overtopping of the channel in this evacuation area. These flow rates were determined
3. The most upstream HEC-RAS river station associated with the identified evacuation area.
4. The travel time from the Dam Outlet to the associated HEC-RAS channel station represents the travel time of the peak Capital Storm flow rate from the Dam outflow
5. The WMS outlet node associated with the identified evacuation area.
6. The hydrograph for the associated WMS outlet node was reviewed in order to determine the time corresponding with the minimum overtopping flow.
7. Per discussion with the Los Angeles County Department of Public Works, a warning time of 480 minutes has been selected.
8. The time at the Dam Outlet represents the time at which the Dam conditions will need to be observed and acted upon in order to provide a 480 minute warning time
9. Water surface elevations occurring behind the Dam eight hours (480 minutes) prior to the anticipated overtopping event have been determined through analysis of

4 Hour Warning - Flood Recognition Calculations

HEC-RAS Information				WMS Information		Dam Condition for 4 Hour Warning		
[1] Evacuation Area	[2] Minimum Overtopping Flow (cfs)	[3] Associated HEC-RAS Channel Station	[4] Travel Time from Dam Outlet to HEC-RAS Station (minutes)	[5] Associated WMS Outlet Node	[6] Time Overtopping Flow Occurs at WMS Node (minutes)	[7] Desired Warning Time (minutes)	[8] Time at Dam Outlet (minutes)	[9] Associated Water Surface Elevation at Devils Gate Dam (ft)
1	11,000	2801.33	8	Lower 1 - 194A	1,155	240	923	1,070.4'
2	13,800	2573.52	12	Lower 2 - 27CD	1,250	240	1,022	1,070.8'
3	5,600	2153	16	Lower 2 - 58AH	995	240	771	1,070.0'
4	12,200	1816.66	17	Lower 2 - 73AJ	1,155	240	932	1,070.4'
5	8,700	1755	18	Lower 2 - 73AJ	1,130	240	908	1,070.4'
6	8,700	1530	19	Lower 2 - 91AK	1,125	240	904	1,070.3'

1. Evacuation Areas have been identified as areas of Channel overtopping that threaten existing residential or commercial structures. It is recommended these areas be
2. The minimum overtopping flow represents the minimum flow rate that causes overtopping of the channel in this evacuation area. These flow rates were determined
3. The most upstream HEC-RAS river station associated with the identified evacuation area.
4. The travel time from the Dam Outlet to the associated HEC-RAS channel station represents the travel time of the peak Capital Storm flow rate from the Dam outflow
5. The WMS outlet node associated with the identified evacuation area.
6. The hydrograph for the associated WMS outlet node was reviewed in order to determine the time corresponding with the minimum overtopping flow.
7. Per discussion with the Los Angeles County Department of Public Works, a warning time of 240 minutes has been selected.
8. The time at the Dam Outlet represents the time at which the Dam conditions will need to be observed and acted upon in order to provide a 240 minute warning time
9. Water surface elevations occurring behind the Dam four hours (240 minutes) prior to the anticipated overtopping event have been determined through analysis of

1 Hour Warning - Flood Recognition Calculations

HEC-RAS Information				WMS Information		Dam Condition for 1 Hour Warning		
[1] Evacuation Area	[2] Minimum Overtopping Flow (cfs)	[3] Associated HEC-RAS Channel Station	[4] Travel Time from Dam Outlet to HEC-RAS Station (minutes)	[5] Associated WMS Outlet Node	[6] Time Overtopping Flow Occurs at WMS Node (minutes)	[7] Desired Warning Time (minutes)	[8] Time at Dam Outlet (minutes)	[9] Associated Water Surface Elevation at Devils Gate Dam (ft)
1	11,000	2801.33	8	Lower 1 - 194A	1,155	60	1,103	1,071.3'
2	13,800	2573.52	12	Lower 2 - 27CD	1,250	60	1,202	1,072.6'
3	5,600	2153	16	Lower 2 - 58AH	995	60	951	1,070.5'
4	12,200	1816.66	17	Lower 2 - 73AJ	1,155	60	1,112	1,071.4'
5	8,700	1755	18	Lower 2 - 73AJ	1,130	60	1,088	1,071.2'
6	8,700	1530	19	Lower 2 - 91AK	1,125	60	1,084	1,071.2'

1. Evacuation Areas have been identified as areas of Channel overtopping that threaten existing residential or commercial structures. It is recommended these areas be
2. The minimum overtopping flow represents the minimum flow rate that causes overtopping of the channel in this evacuation area. These flow rates were determined
3. The most upstream HEC-RAS river station associated with the identified evacuation area.
4. The travel time from the Dam Outlet to the associated HEC-RAS channel station represents the travel time of the peak Capital Storm flow rate from the Dam outflow
5. The WMS outlet node associated with the identified evacuation area.
6. The hydrograph for the associated WMS outlet node was reviewed in order to determine the time corresponding with the minimum overtopping flow.
7. Per discussion with the Los Angeles County Department of Public Works, a warning time of 60 minutes has been selected.
8. The time at the Dam Outlet represents the time at which the Dam conditions will need to be observed and acted upon in order to provide a 60 minute warning time
9. Water surface elevations occurring behind the Dam one hour (60 minutes) prior to the anticipated overtopping event have been determined through analysis of the

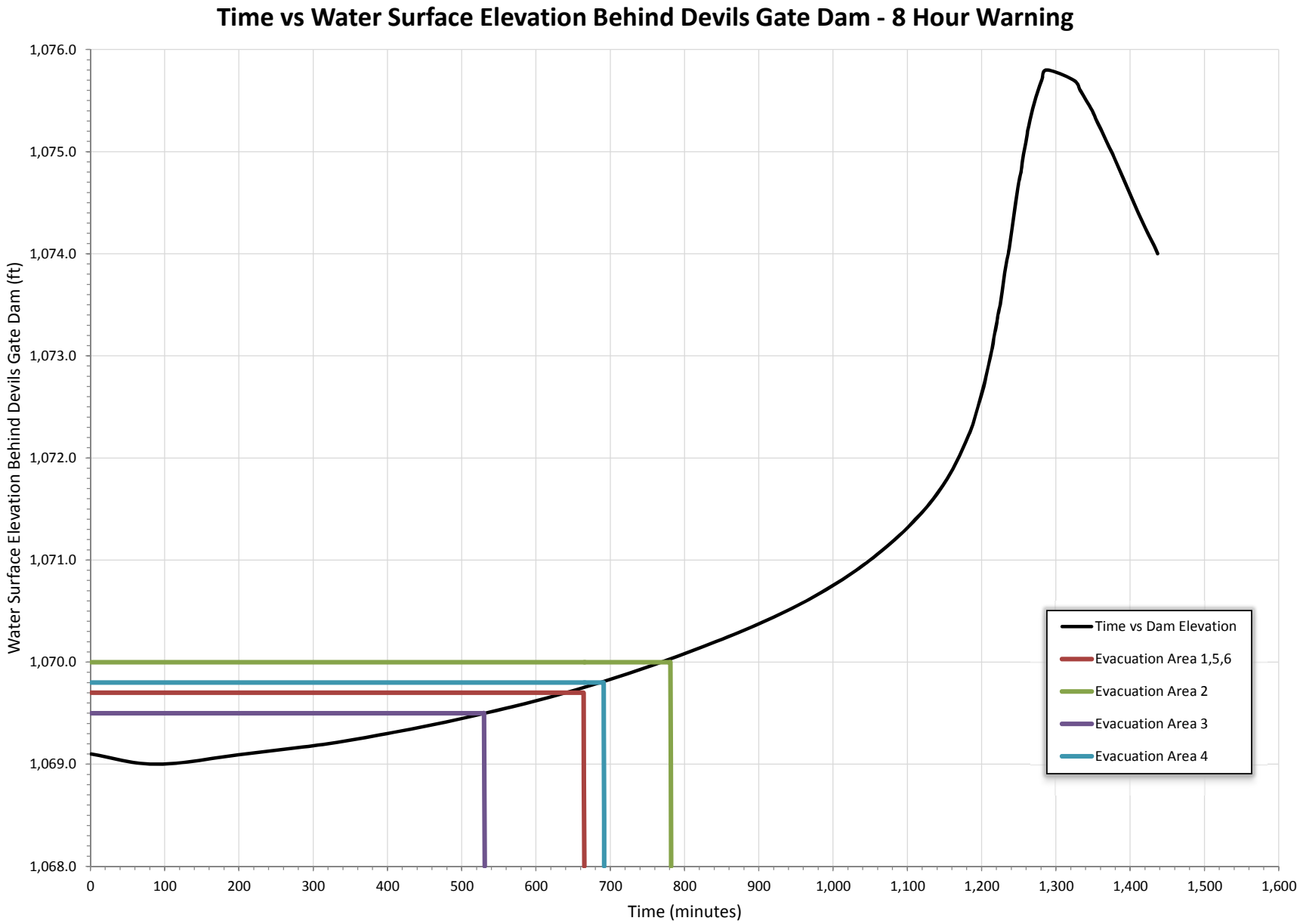

Note: Time vs Dam Elevation data in this graph is representative of conditions occuring during the 4th day of the Capital Storm Event . This relationship was developed based on information obtained from HEC-HMS data produced in the previous hydrologic study.

January 3, 2012

TO: Christopher Stone

FROM: Ken Zimmer
Water Conservation Planning Section

DEVIL'S GATE DAM AND RESERVOIR
WATER CONSERVATION
PROJECT CONCEPT REPORT

Background

Devil's Gate Dam is located in the Arroyo Seco Watershed at Devil's Gate gorge in the City of Pasadena within the Raymond Basin and has a drainage area of 31.9 square miles. The facility was rehabilitated in 1997 to meet modern seismic and probable maximum flood standards required by the California Department of Water Resources Division of Safety of Dams. The project included construction of a new spillway. The new spillway is at elevation 1,040.5 feet, which allows for approximately 750 acre-feet (af) of storage as of April 2010.

The 2009 Station Fire burned nearly the entire Devil's Gate Dam and Reservoir Tributary Watershed. The mudflows from the 2009-10 winter resulted in an increase of 10 to 15 feet of sediment across the reservoir. Currently a project to clean out the reservoir is being planned and is tentatively scheduled to begin in the summer of 2014. After the cleanout, the storage capacity will be 1,730 af.

Sixty-three years of historical records show that Devil's Gate Reservoir has an average annual outflow of 6,900 af. The outflow passes through the dam to the Los Angeles River and is wasted to the ocean.

The Project

This concept proposes to conserve stormwater by holding a reservoir pool behind Devil's Gate Dam and diverting the water to Eaton Wash Dam and Eaton Wash Spreading Grounds for poststorm groundwater recharge. Based on the available storage capacity of Devil's Gate Dam, an estimated 4,500 af can be captured annually for water conservation. A split valve connected to the pump will allow for a possible future connection to the Arroyo Seco Spreading Grounds.

Draft Only

Pump Locations

Alternative A - The pump will be attached to the upstream face of the dam above the lowest point of the reservoir to capture the maximum amount of water. A three-stage vertical turbine pump (25 cubic feet per second (cfs), 450 feet of total head) will be situated at base elevation 996 feet in the Devil's Gate Reservoir (Attachment A). The motor will be placed above the pump shaft at elevation 1,070 feet.

Alternative B - Install the pump inside the existing outlet tunnel and tower on the east side of the dam. The same type of pump will be used and the base of the pump will be located at an elevation of 1,012 feet. Approximately 14 af of stormwater stored behind the dam would be unavailable by placing the pump at this higher elevation. The motor and driver will be located at an elevation of 1,070 feet inside the existing control house. A 30-inch pipeline will run easterly beneath the bridge across the crest of the dam to divert flows to Eaton Wash Dam.

Alternative Pipeline Alignments

Alternative 1 - Pump the stored water out of the reservoir and convey it through a combination of a new pipeline and an existing storm drain to Eaton Wash Dam and Reservoir. Eaton Wash Dam and Reservoir is located approximately 4 miles east of Devil's Gate Dam. Eaton Wash Dam currently has a storage capacity of 660 af at the spillway elevation of 887.5 feet. The storage pool in the reservoir will allow for controlled releases to downstream water conservation facilities, Eaton Wash Spreading Grounds, and Eaton Spreading Basin within the Raymond and Main San Gabriel Basins. Eaton Wash Dam has no storage restrictions.

Approximately 20,500 feet of 30-inch steel pipe will be installed within the right of way of public streets. The 30-inch diameter pipe has an estimated capacity of 25 cfs. Portions of the westerly 17,000 feet of pipe from the dam to the intersection of Michigan Avenue and New York Drive will be under pressure. The line will then gravity flow 3,500 feet and discharge into the existing Fair Oaks Relief Drain (45 inches to 78 inches Reinforced Concrete Pipe). The existing drain ends at the corner of New York Drive and Altadena Drive and would then be connected to a new section of pipeline down New York Drive and outlet into the Eaton Wash Reservoir. Slide gates will also need to be installed between the new pipeline and the existing drain to control the flow during storms. With this alternative, there would be water quality concerns and the pump could not be operated during storm events because the existing storm drain was designed to handle storm flows. Excess flows from pumping the water between dams could possibly cause the storm drain to overflow.

Draft Only

Alternative 2 - Pump the water directly to the Eaton Wash Spreading Grounds. Thirty-one thousand feet of new 30-inch steel pipe will be installed along Woodbury Road and Washington Boulevard. About 23,000 feet of the pipe will be under pressure and the other portion will gravity flow into the Eaton Wash Channel just upstream of the drop inlet that flows into the spreading grounds. In addition to a longer pipeline, the ability to pump water is controlled by the available storage in the spreading grounds and less water would be conserved with this alternative.

Alternative 3 - Same pipe alignment as Alternative 1. It will consist of a dedicated 30-inch pipeline to pump the water from Devil's Gate Reservoir to Eaton Wash Reservoir. The new pipeline will be approximately 26,000 feet long. The pipeline will have provisions for future possible connections to utilize the pipe to deliver imported water from East Raymond Basin to the west side of Pasadena.

The County's Eaton Wash Spreading Grounds Improvement project was completed in January 2011. The intake capacity was increased to 125 cfs and the basins have been combined to enlarge the storage capacity to 575 af. An additional phase of the project to further increase the basin size by approximately 45 af and improve the intake channel is currently in design to be constructed in the summer of 2012.

The City of Pasadena has a concept in their Master Plan to expand their Arroyo Seco Spreading Grounds and construct a pipeline to pump water from the Devil's Gate Reservoir to spread at their facility. By partnering with the City of Pasadena, their pipeline could be connected to the proposed project and save costs for both agencies. These spreading grounds are located within the Devil's Gate Reservoir approximately a half mile north of the dam. The grounds currently consist of 14 shallow basins with a wetted area of 13 acres. Proposed improvements include expanding the grounds into 19 basins for a total of 26 acres, which would also increase the storage capacity from 30 to 104 af.

Flood control easements will need to be obtained for the areas where the new pipeline will be installed.

<u>Costs</u>

The range of costs to construct the diversion system from the Devil's Gate Reservoir to Eaton Wash Reservoir is between $10 and $15 million.

<u>Environmental</u>

The project will require an environmental document. The necessary document will be prepared and the environmental permits from United States Fish and Game, Regional

Draft Only

Water Quality Control Board, and the United States Army Corps of Engineers will be obtained during the project design. Also, a surface water diversion right permit to spread the water will need to be obtained.

Recommendation

The preferred options are Alternative B for placement of the pump and Alternative 3 for the pipe alignment. Placing the pump in the existing outlet tower would have less of a structural and negative aesthetic impact on the dam. In addition, using a dedicated pipeline to the Eaton Wash Reservoir would allow for better control of the storm flows into our facilities and eliminate the storm drain capacity, interconnection and water quality concerns that are associated with using an existing drain.

The project would divert water from Devil's Gate Reservoir to Eaton Wash Reservoir, providing an estimated 4,500 af of additional water conserved at Eaton Wash Spreading Grounds, Eaton Wash Basin or Arroyo Seco Spreading Grounds. The cost of Alternative 3 is approximately $13 million with an annual water conservation benefit of $2.48 million. The proposed project will increase local groundwater supplies and reduce the region's reliance on water imports, without compromising flood control functions of the dams.

Several agencies have shown interest in the project including the City of Pasadena, the Raymond Basin, and the Main San Gabriel Basin Watermaster. All interested parties have reviewed the concept and will be approached to discuss possible cost sharing for project implementation. This project is entered in the Integrated Regional Water Management Plan, and grants will be pursued.

AW
P:\wrd\WATER CONSERVATION\PROJECTS\Current\Devils Gate Pump Pipeline\DGPCR v2.docx

Draft Only

APPENDIX 3-B

Labor Compliance Program

2009

Labor Compliance Program

The Solis Group

234 N. El Molino Avenue, Suite 202

Pasadena, CA 91101

Tel (626) 685-6989

Fax (626) 685-6985

www.thesolisgroup.com

Inland Empire
615 N. Euclid Ave., Ste. 111
Ontario, CA 91762
(909) 981-5536

San Diego
7126 Princess View Dr.
San Diego, CA 92120
(619) 229-9556

Central Valley
736 N. Chinowth St.
Visalia, CA 93291
(559) 622-8652

Nevada
6640 N. Durango Dr. Ste., 160
Las Vegas, NV 89149
(702) 897-9054

The Solis Group
Labor Compliance Program

TABLE OF CONTENTS

SECTION I - PUBLIC WORKS SUBJECT TO PREVAILING WAGE LAWS 3

SECTION II - COMPETITIVE BIDDING ON PUBLIC WORKS CONTRACTS 3

SECTION III - JOB START MEETING 3

SECTION IV – MONITORING PAYMENT OF PREVAILING WAGES 5

A. Certified Payroll Records Required 5
B. Audit of Certified Payroll Records 6
C. On-Site Employee Interviews 7
D. Worker Complaints 7

SECTION V - APPRENTICE REQUIREMENTS 8

A. Use of Apprentices 8
B. Apprentice hours-to-Journeyman hours (Ratios) 8

SECTION VI - REPORTING WILLFUL VIOLATIONS TO THE LABOR COMMISSIONER 9

SECTION VII - ENFORCEMENT ACTION 10

A. Duty of the Awarding Body 10
B. Withholding Contract Payments When Payroll Records are Delinquent or Inadequate 10
C. Withholding for Violation for Not Paying the Per Diem Prevailing Wages 11
D. Forfeitures Requiring Approval by the Labor Commissioner 12
E. Determination of Amount of Forfeiture by the Labor Commissioner 13
F. Deposits of Penalties and Forfeitures Withheld 14
G. Debarment Policy 15

SECTION VIII - NOTICE OF WITHHOLDING AND REVIEW THEREOF 15

SECTION VIII - DISTRIBUTION OF FORFEITED SUMS 16

SECTION IX - OUTREACH ACTIVITIES 16

SECTION X - ANNUAL REPORTS 17

SECTION I - PUBLIC WORKS SUBJECT TO PREVAILING WAGE LAWS

State prevailing wage rates apply to all public works contracts as set forth in Labor Code Sections 1720 et seq. and include, but are not limited to, such types of work as construction, alteration, demolition, repair, or maintenance work. The Division of Labor Statistics and Research (DLSR) predetermines the appropriate prevailing wage rates for particular construction trades and crafts by county.

A. Types of Contracts to Which Prevailing Wage Requirements Apply

As provided in Labor Code Section 1771 et seq., a Labor Compliance Program as described in subdivision (b) of section 1771.5 of the Labor Code shall be initiated and enforced on all applicable public works projects. Upon approval by the Director of the Department of Industrial Relations, this LCP shall apply to all statutes that require Awarding Bodies to have a LCP to which the payment of prevailing wages apply as a condition of project authorization, project funding, or use of specified contracting authority. The Department of Industrial Relations' website shall maintain a list of statutes requiring LCP oversight.

B. Applicable Dates for Enforcement of the LCP

The applicable dates for enforcement of awarding body Labor Compliance Programs is established by Section 16422 of the California Code of Regulations. Contracts are not subject to the jurisdiction of the Labor Compliance Program until after the program has received approval.

SECTION II - COMPETITIVE BIDDING ON PUBLIC WORKS CONTRACTS

All bid advertisements (or bid invitations) and public works contracts shall contain appropriate language concerning the requirements of the Labor Code. Notice of approval of an Awarding Body's Labor Compliance Program shall be given in the Call for Bids and in the contract or purchase order and shall also be posted at the job site. The Notice of an approved Labor Compliance Program shall contain, at the minimum, the effective date of the Director's initial or final approval, a statement whether the limited exemption from prevailing wages pursuant to Labor Code Section 1771.5(a) applies to contracts under the jurisdiction of the LCP, a telephone number to call for inquiries, questions, or assistance with regard to the LCP, and the name of the agent or office administering the LCP.

SECTION III - JOB START MEETING

After the award of a public works contract, and prior to the commencement of the work, a mandatory Job Start meeting (Pre-Job conference) shall be conducted by TSG with the contractor and those subcontractors listed in its bid documents or who are required to be identified or prequalified in a Design-Build Contract.

At that meeting, federal and state labor law requirements applicable to the contract will be discussed and copies of suggested reporting forms furnished, including prevailing wage requirements, the respective record keeping responsibilities, the requirement for the submittal of certified payroll records, and the prohibition against discrimination in employment.

The contractor and each subcontractor will be provided with a Checklist of Labor Law Requirements (presented in Part Three of this document) and will discuss in detail the following checklist items:

1. The contractor's duty to pay prevailing wages (Labor Code §1770 et seq.);

2. The contractor's duty to employ registered apprentices on public works projects (Labor Code §1777.5);

3. The penalties for failure to pay prevailing wages and to employ apprentices, including forfeitures and debarment (Labor Code §1775, §1777.7, and §1813);

4. The requirement to maintain and submit copies of certified payroll records, on a weekly basis, as required (Labor Code §1776), and penalties for failure to do so (Labor Code §1776(g)); the requirement includes and applies to all subcontractors performing work on projects even if their portion of the work is less than one half of one percent of the total amount of the contract.

5. The prohibition against employment discrimination (Labor Code §1735 and §1777.6; the Government Code; and Title VII of the Civil Rights Act of 1964, as amended);

6. The prohibition against taking or receiving a portion of an employee's wages (Labor Code §1778) (kickback);

7. The prohibition against accepting fees for registering any person for public works (Labor Code §1779) or for filing work orders on public works (Labor Code §1780);

8. The requirement to list all subcontractors that are performing one-half of one percent of the total amount of the contract (Public Contract Code Section 4100 et seq.);

9. The requirement to be properly licensed and to require all subcontractors to be properly licensed, and the penalty for employing workers while unlicensed (Labor Code §1021 and under California Contractors License Law. Also, see Business and Professions Code §7000, et seq);

10. The prohibition against unfair competition (Business and Professions Code §17200-17208);

11. The requirement that the contractor and subcontractor be properly insured for Workers' Compensation (Labor Code §1861);

12. The requirement that the contractor abide by the Occupational Safety and Health laws and regulations that apply to the particular public works project.

13. The requirement to secure proof of eligibility/citizenship from all project workers due to the federal prohibition against hiring undocumented workers.

14. The requirement to provide itemized wage statements to project employees under Labor Code §226.

The contractors and subcontractors present at the Job Start meeting will be given the opportunity to ask questions relative to the items contained in the Labor Law Requirements Checklist. The checklist will then be signed by the contractor's representative, a representative of each subcontractor, and a representative of the LCO.

At the Job Start meeting, the contractor will be provided with a copy of the LCP package which includes: a copy of the approved LCP, the checklist of Labor Law Requirements, applicable Prevailing Wage Rate Determinations, blank certified payroll record forms, fringe benefit statements, State apprenticeship requirements, and a copy of the Labor Code relating to Public Works and Public Agencies (Part 7, Chapter 1, §1720-§1861).

It will be the prime contractor's responsibility to provide copies of the LCP package to all listed subcontractors and to any substituted subcontractors.

SECTION IV – MONITORING PAYMENT OF PREVAILING WAGES

A. Certified Payroll Records Required

The contractor and each subcontractor shall maintain payrolls and basic records (timecards, canceled checks, cash receipts, trust fund forms, accounting ledgers, tax forms, superintendent and foreman daily logs, etc.) during the course of the work and shall preserve them for a period of three (3) years thereafter for all trades workers working on projects which are subject to the LCP. Such records shall include the name, address, and social security number of each worker, his or her classification, a general description of the work each employee performed each day, the rate of pay (including rates of contributions, or costs assumed to provide fringe benefits), daily and weekly number of hours worked, and actual wages paid.

1. Submittal of Certified Payroll Records

   The contractor and each subcontractor shall maintain weekly certified payroll records for submittal as required. The contractor shall be responsible for the submittal of payroll records of all its subcontractors. All certified payroll records shall be accompanied by a statement of compliance signed by the contractor or each subcontractor, indicating that the payroll records are correct and complete, that the wage rates contained therein are not less than those determined by the Director of the Department of Industrial Relations, and that the classifications set forth for each employee conform with the work performed.

   Certified payroll records required by Labor Code Section 1776 may be maintained and submitted electronically subject to the conditions set forth in CCR§16404.

   California Code of Regulations (Title 8, section 16000) defines "payroll records" as: all time cards, cancelled checks, cash receipts, trust fund forms, books, documents, schedules, forms, reports, receipts or other evidences which reflect job assignments, work schedules by days and hours, and the disbursement by way of cash, check, or in whatever form or manner, of funds to a person(s) by job classification and/or skill pursuant to a public works project. TSG may request payroll records at any time and the contractor is required to provide requested payroll records within 10 days following written receipt of the request.

2. Full Accountability

   Each individual, laborer or craftsperson working on a public works contract must appear on the payroll. The basic concept is that the employer who pays the trade worker must report that individual on its payroll. This includes individuals working as apprentices in an apprenticeable trade. Owner-operators are to be reported by the contractor employing them; rental equipment operators are to be reported by the rental company paying the workers' wages.

   Sole owners and partners who work on a contract must also submit a certified payroll record listing the days and hours worked, and the trade classification descriptive of the work actually done.

   The contractor shall provide the records required under this section within ten (10) days of each payday and make them available for inspection by the Department of Industrial Relations, and shall permit representatives of each to interview trades workers during working hours on the project site.

3. Responsibility for Subcontractors

   The prime contractor shall be responsible for ensuring adherence to labor standards provisions by its subcontractors. Moreover, the prime contractor is responsible for Labor Code violations of its subcontractors in accordance with Labor Code Section 1775.

4. Payment to Employees

Employees must be paid unconditionally, and not less often than once each week, the full amounts, that are due and payable for the period covered by the particular payday. Thus, an employer must establish a fixed workweek (Sunday through Saturday, for example) and payday (such as every Friday or the preceding day should such payday fall on a holiday). On each and every payday, each worker must be paid all sums due as of the end of the preceding workweek and must be provided with an itemized wage statement as required by Labor Code §226.

If an individual is called a subcontractor, whereas, in fact, he/she is merely a journey level mechanic supplying only his/her labor, such an individual would not be deemed a bona fide subcontractor and must be reported on the payroll of the prime contractor as a trade worker. Moreover, any person who does not hold a valid contractor's license cannot be a subcontractor, and anyone hired by that person is the worker or employee of the general contractor for purposes of prevailing wage requirements, certified payroll reporting and workers' compensation laws.

The worker's rate for straight time hours must equal or exceed the rate specified in the contract by reference to the "Prevailing Wage Determinations" for the class of work actually performed. Any work performed on Saturday, Sunday, and/or on a holiday, or portion thereof, must be paid the prevailing rate established for those days regardless of the fixed workweek. The hourly rate for hours worked in excess of 8 hours in a day and 40 hours in a workweek shall be premium pay. All work performed on Saturday, Sunday and holidays shall be paid pursuant to the Prevailing Wage determination.

B. Audit of Certified Payroll Records

Audits shall be conducted under the direction of the LCO, and shall also be conducted at the request of the Labor Commissioner to determine whether all trades workers on project sites have been paid according to the prevailing wage rates.

Payroll records, once furnished by the contractors, shall be reviewed by TSG staff as promptly as practicable after receipt, but in no case not more than 30 days after receipt. A review of payroll records consists of ensuring that all appropriate data elements identified in Labor Code 1776(a) have been reported; certification forms have been signed; correct prevailing wage rates have been reported as paid for each labor classification; and confirmation of payment has been corroborated by TSG staff. TSG staff will review independent sources of information in order to confirm that payments were made to the worker, which may include but not be limited to: employee interviews, worker's paycheck stubs, copies of bank certified cancelled checks, payroll registers, and/or Employer Payments trust fund accounting records.

For each month in which a contractor reports having workers employed on the project, TSG will undertake random confirmation of payroll records for at least one worker for at least one weekly period within that reporting month. Confirmation of payroll records is defined as an independent corroboration of reported prevailing wage payments. Confirmation will be accomplished through on-site worker interviews, examination of paychecks or paycheck stubs, direct confirmation of payments from third party recipients of "employer payments," or any other reasonable method of corroboration.

If a violation is discovered, TSG shall prepare a written report of the investigation/audit, which at minimum will contain the following information:

- Brief written narrative identifying the Bid Advertisement Date of the contract for public work and summarizing the nature of the violation and the basis upon which the determination of underpayment was made;
- Any penalties to be assessed under Labor Code Section 1775 and 1813;

- Public Works Investigation Worksheet, showing the actual hours worked, amounts paid, amounts due, and classifications of workers employed in connection with the public work;
- Public Works Audit Worksheet, summarizing the information contained on the Public Works Investigation Worksheet; and
- Prevailing Wage Determination Summary, which lists the work classifications involved in the audit and associated prevailing wage amounts.

C. On-Site Employee Interviews

Pursuant to California Code of Regulations §16432(d), in order to confirm the payment of prevailing wages for the appropriate work classification performed by workers on the project, TSG staff will conduct on-site project visits to interview project workers.

On-site visits will be undertaken during each week that workers are present at the job site and may be undertaken randomly or as deemed necessary by the Labor Compliance Program. All craft workers shall be interviewed at least once over the life of the project. While on the job site, a representative sample of all crafts should be interviewed. For example, if four carpenters are working on the job site on the inspection day, two should be interviewed. The interview should not be conducted under the immediate supervision of any project foremen, so as to provide the worker with privacy. Any suspicious behavior such as coaching by the supervisor, or a contractor's unwillingness to allow the required site interview to take place, will result in a more in-depth investigation to take place.

D. Worker Complaints

In addition to monitoring all certified payroll records provided by the contractors, worker complaints of underpayment of prevailing wage rates must be investigated. Employees will be informed that the filing of the complaint is confidential, and that his or her identity will be disclosed to the contractor or subcontractor only after an investigation has occurred and only within the context of an audit worksheet.

Once TSG is notified of a complaint, a written acknowledgement that the complaint has been received must be sent promptly to both the complaining party and the Awarding Body. The acknowledgement must state the name, mailing address and telephone number of the TSG staff assigned to the complaint.

Within 10 days of receiving the complaint, both the complaining party and the Awarding Body must be notified in writing of the resolution or of the status of the complaint and the reason the complaint has not been resolved. Further, the complaining party and the Awarding Body must be notified in writing at least once every 30 days of the status of an unresolved complaint.

If an employee of the contractor reports the violation(s), TSG staff will thoroughly investigate the charge by interviewing the affected employee(s) and analyzing the submitted documents. If it is determined that a violation has occurred, the TSG staff shall prepare a Public Works Audit Worksheet, to be sent to the contractor. Major components and tasks related to investigating worker complaints are: gather supporting documents from all available sources to analyze for authenticity; conducting a complete CPR and/or project audit; and review CPRs for errors, inconsistencies, discrepancies, falsification, misclassification, under-reporting and any other omissions that render the records inaccurate where needed by comparing the inspector of records' daily log with all available records.

SECTION V - APPRENTICE REQUIREMENTS

A. Use of Apprentices

Apprentices shall be permitted to work as such only when they are registered, individually, under a bona fide apprenticeship program registered and approved by the State Division of Apprenticeship Standards. The allowable ratio of apprentices to journeypersons in any craft/classification shall not be greater than the ratio permitted to the contractor as to its entire workforce under the registered program.

Any worker listed on a payroll at an apprentice wage rate who is not registered shall be paid the journey level wage rate determined by the Department of Industrial Relations for the classification of the work he/she actually performed. Pre-apprentice trainees, trainees in non-apprenticeable crafts, and others who are not duly registered will not be permitted on public works projects unless they are paid full prevailing wage rates as journeypersons.

Compliance with California Labor Code Section 1777.5 requires all public works contractors and subcontractors to:

1. Submit contract award information to the apprenticeship committees for each apprenticeable craft or trade in the area of the Project. Must send the DAS-140 form to all apprenticeship committees, unless the contractor is registered with a particular one;

2. Request dispatch of apprentices from the applicable Apprenticeship Program(s) and employ apprentices on public works projects in a ratio to journeypersons which in no case shall be less than one (1) hour of apprentice work to each five (5) hours of journeyperson work; and

3. Contribute to the applicable Apprenticeship Program(s) or the California Apprenticeship Council in the amount identified in the prevailing wage rate publication for journeypersons and apprentices. If payments are not made to an Apprenticeship Program, they shall be made to the California Apprenticeship Council, Post Office Box 420603, San Francisco, CA 94142.

If the contractor is registered to train apprentices, it shall furnish written evidence of the registration (i.e., Apprenticeship Agreement or Statement of Registration) of its training program and apprentices, as well as the ratios allowed and the wage rates required to be paid there under for the area of construction, prior to using any apprentices in the contract work. It should be noted that a prior approval for a separate project does not confirm approval to train on any project. The contractor/subcontractor must check with the applicable Joint Apprenticeship Committee to verify status.

B. Apprentice hours-to-Journeyman hours (Ratios)

Unless a collective bargaining agreement specifies a different ratio, the typical ratio of apprentice hours to journeyman hours is one to five; in other words, apprentices in an apprenticeable trade should typically work 20 percent of total hours worked. The Division of Apprenticeship Standards maintains a list of all trades and their applicable specified apprenticeship ratios.

If TSG determines that at the end of a contractor or subcontractor's work on the public works contract that the contractor was in violation of the apprentice-to-journeyman ratio, TSG will require that the regular prevailing wage rate be paid to any worker who is not a duly registered apprentice and for any hours in excess of the maximum ratio permitted under Labor Code Section 1777.5(g).

SECTION VI - REPORTING WILLFUL VIOLATIONS TO THE LABOR COMMISSIONER

If an investigation reveals that a willful violation of the Labor Code has occurred, the LCO will make a written report to the Labor Commissioner reflecting prevailing wage deficiencies for each underpaid worker, and including any penalties to be assessed under Labor Code sections 1775 and 1813, as determined by the LCP after consideration of the best information available as to actual hours worked, amounts paid, and classifications of workers employed in connection with the public work. Such available information may include, but is not limited to, worker interviews, complaints from workers or other interested persons, all time cards, bank certified cancelled checks, cash receipts, trust fund forms, books, documents, schedules, forms, reports, receipts or other evidences which reflect job assignments, work schedules by days and hours, and the disbursement by way of cash, check, or in whatever form or manner, of funds to a person(s) by job classification and/or skill pursuant to a public works project. An Audit using the Audit Record Worksheets found in Attachment E, when accompanied by a brief narrative identifying the Bid Advertisement Date of the contract for public work and summarizing the nature of the violation and the basis upon which the determination of underpayment was made, presumptively demonstrates sufficiency.

Labor Code Section 1777.1 states:

> "A willful violation occurs when the contractor or subcontractor knew or reasonably should have known of his or her obligations under the public works law and deliberately fails or refuses to comply with its provisions."

Six (6) types of willful violations are reported:

A. Failure to Comply with Prevailing Wage Rate Requirements

Whenever it is determined that a willful violation has occurred in failing to comply with prevailing wage rate requirements (as set forth in the Labor Code and public works contracts) by paying less than the stipulated basic hourly rate to trades workers, or if overtime, holiday rates, fringe benefits, and/or employer payments are paid at a rate less than stipulated, it shall be reported to the Labor Commissioner upon completion of an investigation and audit.

B. Falsification of Payroll Records, Misclassification of Work, and/or Failure to Accurately Report Hours of Work

Falsification of payroll records and failure to accurately report hours of work is characterized by deliberate underreporting of hours of work; underreporting the headcount; stating that the proper prevailing wage rate was paid when, in fact, it was not; clearly misclassifying the work performed by the worker; and any other deliberate and/or willful act which results in the falsification or inaccurate reporting of payroll records.

C. Failure to Submit Certified Payroll Records

Whenever it is determined that a willful violation has occurred by the contractors and/or subcontractors not having responded to the 10-day notification by the LCO to comply with the requirement of submittal of weekly certified payroll records and/or to correct inaccuracies or omissions that have been detected, it shall be reported to the Labor Commissioner upon completion of an investigation and audit.

D. Failure to Pay Fringe Benefits (Employer Contributions)

Fringe benefits are defined as the amounts stipulated for employer payments or trust fund contributions and are determined to be part of the required prevailing wage rate. Whenever it is determined that a willful violation has occurred by failure to pay or provide fringe benefits and/or make trust fund contributions on a timely basis, which is equivalent to payment of less than the stipulated wage rate, it shall be reported to the Labor Commissioner upon completion of an investigation and audit.

E. Failure to Pay the Correct Apprentice Rates and/or Misclassification of Workers as Apprentices

Failure to pay the correct apprentice rate or classifying a worker as an apprentice when he/she is not properly registered is equivalent to payment of less than the stipulated wage rate and shall be reported to the Division of Apprenticeship Standards as a willful violation, upon completion of an investigation and audit.

F. Taking or Receiving a Portion of an Employee's Wages (Kickbacks)

Accepting or extracting kickbacks from employee wages under Labor Code Section 1778 constitutes a felony and may be prosecuted by the appropriate enforcement agency.

After the Labor Compliance Program has determined that violations of the prevailing wage laws have resulted in the underpayment of wages and an audit has been prepared, prior to a determination of the amount of forfeiture by the Labor Commissioner, notification shall be provided to the contractor and affected subcontractor of an opportunity to resolve the wage deficiency pursuant to CCR§16432(f). The contractor and affected subcontractor may, within 10 days after notification of the wage deficiency, submit to the Labor Compliance Program for consideration exculpatory information consistent with the "good faith mistake" factors set forth in Labor Code Section 1775(a)(2)(A)(i) and (ii). The Labor Compliance Program shall not be required to request the Labor Commissioner for a determination of the amount of penalties to be assessed under Labor Code Section 1775 if, (a) based upon the contractor's submission, the Labor Compliance Program reasonably concludes that the failure to pay the correct wages was a good faith mistake, and has no knowledge that the contractor and affected subcontractor have a prior record of failing to meet their prevailing wage obligations, and (b) the underpayment of wages to workers is promptly corrected and proof of such payment is submitted to the Labor Compliance Program.

SECTION VII - ENFORCEMENT ACTION

A. Duty of the Awarding Body

The Solis Group, as the entity having an approved LCP, has a duty to the Director of the Department of Industrial Relations to enforce Labor Code Section 1720 et seq. and the procedural regulations of the Department of Industrial Relations in a manner consistent with the practice of DLSE and regulations found at Title 8, California Code Regulations, Section 16000 et seq.

B. Withholding Contract Payments When Payroll Records are Delinquent or Inadequate

1. "Withhold" means to cease payments by the awarding body, its agents or others who pay on its behalf to the contractor. Where the violation is by a subcontractor, the contractor shall be notified of the nature of the violation and reference made to its rights under Labor Code Section 1729.

   A release bond under Civil Code Section 3196 may not be posted for the release of the funds being withheld for the violation of the prevailing wage law.

2. "Contracts" except as otherwise provided by agreement, means only contracts under a single master contract, including a design-build contract, or contracts entered into as stages of a single project which may be the subject of withholding, pursuant to the Labor Code §1720, §1720.2, §1720.3, §1720.4, §1771, and §1771.5;

3. "Delinquent payroll records" means those not submitted on the basis set forth in the Contract;

4. "Inadequate payroll records" are any one of the following:

   a. A record lacking any of the information required by Labor Code §1776;

b. A record which contains all of the required information but is not certified, or is certified by someone who is not an agent of the contractor or subcontractor;

c. A record remaining uncorrected for one payroll period, after the Labor Compliance Program has given the contractor or subcontractor notice of inaccuracies detected by audit or record review. Provided, however, that prompt correction will stop any duty to withhold if such inaccuracies do not amount to one (1) percent of the entire Certified Weekly Payroll in dollar value and do not affect more than half the persons listed as workers employed on that Certified Weekly Payroll, as defined in Labor Code Section 1776 and Title 8 CCR section 16401 of Title 8 of the California Code of Regulations.

5. The withholding of contract payments when payroll records are delinquent or inadequate is required by Labor Code Section 1771.5(b)(5), and it does not require the prior approval of the Labor Commissioner. The Awarding Body shall only withhold those payments due or estimated to be due to the contractor or subcontractor whose payroll records are delinquent or inadequate, plus any additional amount that the LCP has reasonable cause to believe may be needed to cover a back wage and penalty assessment against the contractor or subcontractor whose payroll records are delinquent or inadequate; provided that a contractor shall be required in turn to cease all payments to a subcontractor whose payroll records are delinquent or inadequate until the LCP provides notice that the subcontractor has cured the delinquency or deficiency.

6. When contract payments are withheld, the LCP shall provide the contractor and subcontractor, if applicable, with immediate written notice that includes all of the following: (1) a statement that payments are being withheld due to delinquent or inadequate payroll records, and that identifies what records are missing or states why records that have been submitted are deemed inadequate; (2) specifies the amount being withheld; and (3) informs the contractor or subcontractor of the right to request an expedited hearing to review the withholding of contract payments under Labor Code Section 1742, limited to the issue of whether the records are delinquent or inadequate or the LCP has exceeded its authority under this section.

7. No contract payments shall be withheld solely on the basis of delinquent or inadequate payroll records after the required records have been produced.

8. In addition to withholding contract payments based on delinquent or inadequate payroll records, penalties shall be assessed under Labor Code Section 1776(g) for failure to timely comply with a written request for certified payroll records. The assessment of penalties under Labor Code Section 1776(g) does require the prior approval of the Labor Commissioner under section 16436 of these regulations.

C. <u>Withholding for Violation for Not Paying the Per Diem Prevailing Wages</u>

1. "Withhold" and “contracts” have the same meaning set forth in Sections 16435(a) and 16435(b) of these regulations.

2. Where the violation is by a subcontractor, the general contractor shall be notified of the nature of the violation and reference made to its rights under Labor Code Section 1729.

3. “Amount equal to the underpayment” is the total of the following determined by payroll review, audit, or admission of the contractor or subcontractor:

a. The difference between amounts paid workers and the correct General Prevailing Rate of Per Diem Wages, as defined in Labor Code Section 1773, and determined to be the prevailing rate

due workers in such craft, classification or trade in which they were employed and the amounts paid;

b. The difference between amounts paid on behalf of workers and the correct amounts of Employer Payments, as defined in Labor Code Section 1773.1 and determined to be part of the prevailing rate costs of contractors due for employment of workers in such craft, classification or trade in which they were employed and the amounts paid;

c. Estimated amounts of "illegal taking of wages";

d. Amounts of apprenticeship training contributions paid to neither the program sponsor's training trust nor the California Apprenticeship Council; and

e. Estimated penalties under Labor Code Sections 1775, 1776, and 1813.

4. The withholding of contract payments when, after investigation, it is established that underpayment or other violations have occurred requires the prior approval of the Labor Commissioner under CCR Sections 16436 and 16437.

5. Provisions relating to the penalties under Labor Code Sections 1775, and 1813:

a. Pursuant to Labor Code Section 1775, the contractor shall, as a penalty, forfeit up to fifty dollars ($50) for each calendar day, or portion thereof, for each worker paid less than the prevailing wages.

b. Pursuant to Labor Code Section 1813, the contractor shall, as a penalty, forfeit twenty-five dollars ($25) for each worker employed in the execution of the contract by the contractor or by any subcontractor for each calendar day during which such worker is required or permitted to work more than eight (8) hours in any one calendar day and 40 hours in any one calendar week.

D. <u>Forfeitures Requiring Approval by the Labor Commissioner</u>

1. For purposes of this section and CCR Section 16437, "forfeitures" means the amount of wages, penalties, and forfeitures assessed by the LCP and proposed to be withheld pursuant to Labor Code Section 1771.6(a), and includes the following: (1) the difference between the prevailing wage rates and the amount paid to each worker for each calendar day or portion thereof for which each worker was paid less than the prevailing wage rate by the contractor or subcontractor; and (2) penalties assessed under Labor Code Sections 1775, 1776 and 1813.

2. If the aggregate amount of forfeitures assessed as to a contractor or subcontractor is less than $1000.00, the forfeitures shall be deemed approved by the Labor Commissioner upon service and the Labor Commissioner's receipt of copies of the following: (1) the Notice of Withholding of Contract Payments authorized by Labor Code Section 1771.6(a); (2) an Audit as defined in CCR Section 16432(e), and (3) a brief narrative identifying the Bid Advertisement Date of the contract for public work and summarizing the nature of the violation, the basis of the underpayment, and the factors considered in determining the assessment of penalties, if any, under Labor Code Section 1775.

(c) For all other forfeitures, approval by the Labor Commissioner shall be requested and obtained in accordance with CCR Section 16437.

E. Determination of Amount of Forfeiture by the Labor Commissioner

1. When the LCO requests a determination of the amount of forfeiture, the request shall include a file or report to the Labor Commissioner which contains at least the information specified in subparts (a) through (i) below. Attachment G is a sample Request for Approval of Forfeiture under this section.

   (a) Whether the public work has been accepted by the awarding body and whether a valid notice of completion has been filed, and the dates if any when those events occurred, and the amount of funds being held in retention by the Awarding Body;

   (b) Any other deadline which if missed would impede collection;

   (c) Evidence of violation, in narrative form;

   (d) Evidence of violation obtained under CCR Section 16432 and a copy of the Audit prepared in accordance with CCR Section 16432 setting forth the amounts of unpaid wages and applicable penalties;

   (e) Evidence that before the forfeiture was sent to the Labor Commissioner (A) the contractor and subcontractor were given the opportunity to explain why there was no violation, or that any violation was caused by good faith mistake and promptly corrected when brought to the contractor or subcontractor's attention, and (B) the contractor and subcontractor either did not do so or failed to convince the LCP of its position;

   (f) Where the LCP seeks not only wages but also a penalty as part of the forfeiture, and the contractor or subcontractor has unsuccessfully contended that the cause of violation was a good faith mistake that was promptly corrected when brought to the contractor or subcontractor's attention, a short statement should accompany the proposal for a forfeiture, with a recommended penalty amount pursuant to Labor Code Section 1775(a);

   (g) Where the LCP seeks only wages or a penalty less than $50 per day as part of the forfeiture because the contractor or subcontractor has successfully contended that the cause of the violation was a good faith mistake that was promptly corrected when brought to the contractor or subcontractor's attention, the file should include the evidence as to the contractor or subcontractor's knowledge of his or her obligation, including the program's communication to the contractor or subcontractor of the obligation in the bid invitations, at the pre-job conference agenda and records, and any other notice given as part of the contracting process. With the file should be a statement, similar to that described in (6), and recommended penalty amounts, pursuant to Labor Code Section 1775(a);

   (h) The previous record of the contractor and subcontractor in meeting his or her their prevailing wage obligations; and

   (i) Whether the LCP has been granted initial, extended initial or final approval on only an interim or temporary basis under CCR Sections 16425 or 16426 or whether it has been granted extended approval under CCR Section 16427.

2. The file or report shall be served on the Labor Commissioner as soon as practicable after the violation has been discovered, and not less than 30 days before the final payment, but in no event not less than 30 days before the expiration of the limitations period set forth in Labor Code Section 1741.

3. A copy of the recommended forfeiture and the file or report shall be served on the contractor and subcontractor at the same time as it is sent to the Labor Commissioner. The Labor Compliance Program may exclude from the documents served on the contractor and subcontractor copies of documents secured from the contractor or subcontractor during an audit, investigation, or meeting if those are clearly referenced in the file or report.

4. The Labor Commissioner shall affirm, reject, or modify the forfeiture in whole or in part as the wages and penalties due.

5. The Labor Commissioner's determination of the forfeiture is effective on one of the two following dates:

   (1) For all programs other than those having extended authority under CCR Section 16427 LCPs with initial approval or an extension of initial approval pursuant to CCR Section 16425 or 16426, on the date the Labor Commissioner serves by first class mail, on the LCP, on the Awarding Body if different, on the contractor and on the subcontractor, if any, an endorsed copy of the proposed forfeiture, or a newly drafted forfeiture statement which sets out the amount of forfeiture approved. Service on the contractor or subcontractor is effective if made on the last address supplied by the contractor or subcontractor in the record. The Labor Commissioner's approval, modification or disapproval of the proposed forfeiture shall be served within 30 days of receipt of the proposed forfeiture.

   (2) For programs with final approval extended authority under CCR Section 16427 above, approval is effective 20 days after the requested forfeitures are served upon the Labor Commissioner, unless the Labor Commissioner serves a notice upon the parties, within that time period, that this forfeiture request is subject to further review. For such programs, a notice that approval will follow such a procedure will be included in the transmittal of the forfeiture request to the contractor. If the Labor Commissioner notifies the parties of a decision to undertake further review, the Labor Commissioner's final approval, modification or disapproval of the proposed forfeiture shall be served within 30 days of the date of notice of further review.

F. <u>Deposits of Penalties and Forfeitures Withheld</u>

1. Where the involvement of the Labor Commissioner had been limited to a determination of the actual amount of penalty, forfeiture or underpayment of wages, and the matter has been resolved without litigation by or against the Labor Commissioner, the Labor Compliance Program shall deposit penalties and forfeitures with the Awarding Body.

2. Where collection of fines, penalties or forfeitures results from administrative proceedings or court action to which the Labor Commissioner and Awarding Body or its Labor Compliance Program are both parties, the fines, penalties or forfeitures shall be divided between the general funds of the state and the Awarding Body, as the Hearing Officer or court may decide.

3. All penalties recovered in administrative proceedings or court action brought by or against the Labor Commissioner and to which the Awarding Body or its Labor Compliance Program is not a party, shall be deposited in the general fund of the state.

4. All wages and benefits which belong to an employee and are withheld or collected from a contractor or subcontractor, either by withholding or as a result of administrative proceedings or any court action, and which have not been paid to the employee or irrevocably committed on the employee's behalf to a benefit fund, shall be deposited with the Labor Commissioner, who shall handle such wages and benefits in accordance with Labor Code Section 96.7.

G. Debarment Policy

It is the policy of TSG that the public works prevailing wage requirements set forth in the California Labor Code, Section 1720-1861, be strictly enforced. In furtherance thereof, construction contractors and subcontractors found to be repeat violators of the California Labor Code shall be referred to the Labor Commissioner for debarment from bidding on or otherwise being awarded any public work contract, within the state of California, for the performance of construction and/or maintenance services for the period not to exceed three (3) years in duration. The duration of the debarment period shall depend upon the nature and severity of the labor code violations and any mitigating and/or aggravating factors, which may be presented at the hearing conducted by the Labor Commissioner for such purpose.

SECTION VIII - NOTICE OF WITHHOLDING AND REVIEW THEREOF

After determination of the amount of forfeiture by the Labor Commissioner, notice of withholding of contract payments shall be provided to the contractor and subcontractor, if applicable. The notice shall be in writing and shall describe the nature of the violation and the amount of wages, penalties, and forfeitures withheld. Service of the notice shall be completed pursuant to Section 1013 of the Code of Civil Procedure by first-class and certified mail to the contractor and subcontractor, if applicable. The notice shall advise the contractor and subcontractor, if applicable, of the procedure for obtaining review of the withholding of contract payments. TSG shall also serve a copy of the notice by certified mail to any bonding company issuing a bond that secures the payment of wages covered by the notice and to any surety on a bond, if their identities are known to the awarding body. **A copy of the Notice of Withholding of Contract Payments (NWCP) to be utilized is found as Attachment H to this document.**

Review of NWCP

1. An affected contractor or subcontractor may obtain review of a NWCP under this chapter by transmitting a written request to the office of the LCP that appears on the NWCP within 60 days after service of the NWCP. If no hearing is requested within 60 days after service of the NWCP, the NWCP shall become final.

2. Within ten days following receipt of the request for review, the LCP shall transmit to the Office of the Director-Legal Unit the request for review and copies of the Notice of Withholding of Contract Payments, any audit summary that accompanied the notice, and a proof of service or other documents showing the name and address of any bonding company or surety that secures payment of the wages covered by the notice. **A copy of the required Notice of Transmittal to be utilized is found as Attachment I to this document.**

3. Upon receipt of a timely request, a hearing shall be commenced within 90 days before the Director, who shall appoint an impartial hearing officer possessing the qualifications of an administrative law judge pursuant to subdivision (b) of Section 11502 of the Government Code. The appointed hearing officer shall be an employee of the department, but shall not be an employee of the Division of Labor Standards Enforcement. The contractor or subcontractor shall be provided with an opportunity to review evidence to be utilized by the LCP at the hearing within 20 days of the receipt of the written request for a hearing. Any evidence obtained by the LCP subsequent to the 20-day cutoff shall be promptly disclosed to the contractor or subcontractor. **A copy of a Notice of Opportunity to Review Evidence Pursuant to Labor Code Section 1742(b) form is found as Attachment J to this document.**

   The contractor or subcontractor shall have the burden of proving that the basis for the NWCP is incorrect. The NWCP shall be sufficiently detailed to provide fair notice to the contractor or subcontractor of the issues at the hearing.

Within 45 days of the conclusion of the hearing, the Director shall issue a written decision affirming, modifying, or dismissing the assessment. The decision of the Director shall consist of a notice of findings, findings, and an order. This decision shall be served on all parties pursuant to Section 1013 of the Code of Civil Procedure by first-class mail at the last known address of the party on file with the LCP. Within 15 days of the issuance of the decision, the Director may reconsider or modify the decision to correct an error, except that a clerical error may be corrected at any time. The Director has adopted regulations setting forth procedures for hearings.

4. An affected contractor or subcontractor may obtain review of the decision of the Director by filing a petition for a writ of mandate to the appropriate superior court pursuant to Section 1094.5 of the Code of Civil Procedure within 45 days after service of the decision. If no petition for writ of mandate is filed within 45 days after service of the decision, the order shall become final. If it is claimed in a petition for writ of mandate that the findings are not supported by the evidence, abuse of discretion is established if the court determines that the findings are not supported by substantial evidence in the light of the whole record.

5. A certified copy of a final order may be filed by the Labor Commissioner in the office of the clerk of the superior court in any county in which the affected contractor or subcontractor has property or has or had a place of business. The clerk, immediately upon the filing, shall enter judgment for the state against the person assessed in the amount shown on the certified order.

6. A judgment entered pursuant to this procedure shall bear the same rate of interest, shall have the same effect as other judgments, and shall be given the same preference allowed by law on other judgments rendered for claims for taxes. The clerk shall not charge for the service performed by him or her pursuant to this section.

7. This procedure shall provide the exclusive method for review of a NWCP to withhold contract payments pursuant to Labor Code Section 1771.7.

SECTION IX - DISTRIBUTION OF FORFEITED SUMS

1. Before making payments to the contractor of money due under a contract for public works, all amounts required to satisfy the NWCP shall be withheld and retained there from. The amounts required to satisfy the NWCP shall not be disbursed until receipt of a final order that is no longer subject to judicial review.

2. Pending a final order, or the expiration of the time period for seeking review of the notice of the withholding, any contract payments withheld shall not be disbursed.

3. From the amount recovered, the wage claim shall be satisfied prior to the amount being applied to penalties. If insufficient money is recovered to pay each worker in full, the money shall be prorated among all workers employed on the public works project who are paid less than the prevailing wage rate. The wage claim shall have **PRIORITY** over all Stop Notices filed against the prime contractor.

4. Wages for workers who cannot be located shall be placed in the Industrial Relations Unpaid Fund and held in trust for the workers pursuant to Labor Code Section 96.7. Penalties shall be paid into the General Fund of the School District that has enforced this chapter pursuant to Labor Code Section 1771.7.

SECTION X - OUTREACH ACTIVITIES

To ensure the successful implementation of the LCP, there shall be several outreach activities initiated and maintained.

A. Providing Information to the Public

The LCO shall be responsible for communication and outreach activities relative to public information on the LCP:

1. Regular presentations to contractors at all Job Walk Meetings (Pre-Bid conferences) and Job Start Meetings (Pre-Job conferences);

2. Ongoing communication via correspondence and with workers at job sites when review of the certified payroll records reveals the possibility of prevailing wage violations;

3. Periodic meetings with contractor organizations, prime contractors, and subcontractors interested in public works contracting.

B. In-Service Management Training on the Labor Compliance Program

TSG shall provide ongoing management in-servicing and workshops for project personnel relative to the terms, requirements and administration of the Labor Compliance Program. TSG shall require all personnel to document their review of TSG's Labor Compliance Policies and Procedures Manual, which outlines the responsibilities and procedures of the Labor Compliance Program. Whenever TSG's Labor Compliance Policies and Procedures Manual is updated to accurately reflect any amendments to the public works laws and regulations (including the laws and regulations governing Labor Compliance Programs), TSG personnel will be required to review and sign-off on the record sheet to indicate that they have undergone the latest training.

SECTION X - ANNUAL REPORTS

The LCP will submit to the Director an annual report on its operation within 60 days after the close of its annual reporting period, as defined in subpart (3) and (4) below. The annual report shall be made on the appropriate form [LCP-AR3, included as Attachment L], unless the Director has agreed to a different reporting format for a Program that has been granted extended authority under CCR Section 16427. A third party LCP that contracted with more than one Awarding Body or Joint Powers Authority during the annual reporting period shall separately report on Labor Code Section 1771.5(b) enforcement activities for each Awarding Body or Joint Powers Authority covered by the report.

The Annual Report for a person or entity operating a third party Labor Compliance Program shall also include: (1) a certification of compliance with conflict of interest disclosure requirements by employees and consultants who participate in making governmental decisions, as defined under Title 2, CCR Section 18701, and (2) a current statement disclosing the information required under CCR Section 16426(a)(2), (3) and (5).

Information in the Annual Report will be reported in sufficient detail to afford a basis for evaluating the scope and level of enforcement activity of the LCP. An annual report shall also include such additional information as the LCP may be required to report as a condition of its approval.

For purposes of this section, the annual reporting period shall be deemed to commence on the first of the month in which the LCP is first granted approval pursuant to CCR Section 16425 or 16426 and shall conclude on the last day of the month immediately preceding that date in the following year.

The Solis Group

Labor Compliance Program

FORMS

LABOR COMPLIANCE PROGRAM
JOB-START/PRE-CONSTRUCTION MEETING PACKET
CONTRACTOR HANDOUT

Included in this packet are materials to assist your company in complying with the Awarding Body's Labor Compliance Program (LCP). The Solis Group monitors and enforces the Awarding Body's LCP.

Have questions about how to comply with the LCP? Call the Lead Labor Compliance Officer assigned to monitor the project at (626) 685-6989.

PACKET INCLUDES:

1. Prevailing Wage / DIR Determination Website Link

2. Sample Prevailing Wage Determination

3. Pre-Construction Meeting Labor Compliance Responsibilities & Requirements

4. Prevailing Wage Contractor Handout

5. Division of Apprenticeship Standards – Apprenticeship Requirements

6. Required LCP Submittal Forms (Blank/Sample Forms)
   - Attachment 1: Forms Submittal Schedule
   - Attachment 2: LCP Checklist
   - Attachment 3: DAS-140
   - Attachment 4: DAS-142
   - Attachment 5: CAC-2
   - Attachment 6: Statement of Compliance
   - Attachment 7: Certified Payroll Record
   - Attachment 8: Statement of Non-Performance
   - Attachment 9: Fringe Benefit Statement
   - Attachment 10: Monthly Trustee Report
   - Attachment 11: Monthly Employment Utilization Reporting Form
   - Attachment 12: Public Works Affidavit

PREVAILING WAGE
DIR DETERMINATION WEBSITE LINK

http://www.dir.ca.gov/DLSR/statistics_research.html

The first bid advertisement date establishes which Department of Industrial Relations (DIR) determination to use for each work classification you assign to this project.

All contractors working on the _____ **Project** must refer to the following DIR determination:

200__ - __ / Prevailing Wage Determinations

(i.e. 2007-2 General prevailing wage determinations menu (journeyman) /
2007-2 General prevailing apprentice schedule menu).

NOTE: Contractors are held responsible for any/all increases to the prevailing wages. If you see a double asterisk after the determination expiration date (**), there will be an increase to the prevailing wages. If you have any questions, please call the Labor Compliance Officers assigned to monitor this project, at (626) 685-6989.

SAMPLE PREVAILING WAGE DETERMINATION

PRE-CONSTRUCTION MEETING
LABOR COMPLIANCE RESPONSIBILITIES & REQUIREMENTS

I. REQUIRED SUBMITTALS (Submittal Schedule & Forms)

A. LCP Checklist – Submit at Pre-Construction Meeting (Review and sign)

1. Payment of Prevailing Wage Rates
   - Public Works Project requires the payment of prevailing wages to all employees
   - The prevailing wage determination applicable to this project can be found on the California Department of Industrial Relations website at: http://www.dir.ca.gov/DLSR/statistics_research.html
   - **You must refer to the _____ Determination**
2. Apprentices
   - All contractors must make a "good faith effort" to employ apprentices (if craft is apprenticeable).
   - Submit a DAS-140 (Public Works Contract Award Information) to your appropriate Apprenticeship Committee. Submit copy of your certified mail certificate as proof of your submittal.
3. Penalties
4. CPRs
5. Non-Discrimination in Employment
6. Kickbacks Prohibited
7. Acceptance of Fees Prohibited
8. Listing of Subcontractors
9. Proper Licensing
10. Unfair Competition Prohibited
11. Workers' Compensation Insurance
12. OSHA
13. Hiring Undocumented Workers
14. Itemized Wage Statements to Employees
15. Public Works Affidavit

B. DAS-140 & DAS-142 – Submit before you start work on the project.

- Requirement to "announce" that you will be working on a public works project (compliance is proven via submittal of DAS-140)
- Requirement to "request the dispatch of apprentices" for this public works project (compliance is proven via submittal of DAS-142 <u>or</u> via verbal request)
- These forms should be sent to the local apprenticeship committee for your craft.
- If you need the contact information for your applicable apprenticeship committee, call TSG at (626) 685-6989

C. CAC-2 – Submit each month, or 1-time submittal (at beginning or end of project)

- For every craft and every hour worked in that craft, you must make the appropriate training fund contributions. Record the total number of hours workers worked on the job, multiply by the appropriate training amount for that craft, and send a check to appropriate fund (see below).
- ***Union Contractors:*** On the CAC-2, indicate which Union Trust Fund you make training fund contributions to. TSG will audit Trust Fund Reports.
- ***Non-Union contractors:*** Must make training fund contributions to the California Apprenticeship Council. Send a copy of the CAC-2 form & copy of the contribution check to TSG.

D. CPRs & Statements of Compliance – Submit for each week you work on the project.

- ***CPRs must be submitted for every week that work was performed on the project.***

- *Make sure that you include an accurate work classification for all your workers. (e.g. 'Laborer Group 2', 'Laborer Apprentice level 1' or 'apprentice 65%'*
- *CPRs are not valid unless accompanied by a signed statement of compliance*
- *CPRs must be submitted even on the weeks in which you did not perform any work – This is called a non-performance payroll.*
- *The last payroll should be marked as "final" – when we see the final payroll it triggers our closeout procedures.*

E. Fringe Benefit Statement - Submit with your 1st CPR.

- *Indicate each benefit amount for every individual craft you employ on this project.*
- *If fringe benefits are paid to workers in cash, please write that next to the benefit dollar amounts on the form.*
- *If fringe benefits are paid to a Union or Employer's Trust Fund on behalf of your workers, write the contact information in the designated places.*
- *Note: Training Fund Contributions are never paid to the employees.*

F. Trustee Reports – Submit monthly (typically 2 months in the rear)

- *If fringe benefits are paid to a Union or Employer's Trust Fund on behalf of your workers, Trust Fund Reports & copies of the contribution checks must be submitted monthly – this proves the benefits were paid for every hour worked on this project.*

G. Public Works Affidavit – Submit with your "final" CPR

- *Once TSG has received all the required submittals from your firm, and has resolved any outstanding issues, TSG will sign-off on the PWA & forward it to the District along with a Request for Release of Retention.*

II. PENALTIES

Goal: Resolve all issues before they reach the penalty stage. If workers are underpaid, we will give you the opportunity to correct the situation. However, if we do not receive the documents we need in a timely manner, or do not receive responses to our letters, we will not hesitate to impose penalties. Penalties can add up, ranging from $25 a day per worker to $50 dollars a day per worker.

LABOR COMPLIANCE PROGRAM
The Solis Group
234 North El Molino Avenue, Suite 202
Pasadena, CA 91101

Phone: (626) 685-6989
Fax: (626) 685-6985

PREVAILING WAGE CONTRACTOR HANDOUT

PUBLIC WORKS REQUIREMENTS:

(1) The appropriate number of apprentices are on the job site, as set forth in Labor Code Section 1777.5;
(2) Worker's compensation coverage, as set forth in Labor Code Sections 1860 and 1861;
(3) Keep accurate records of the work performed on the public works project, as set forth in Labor Code Section 1812;
(4) Inspection of payroll records pursuant to Labor Code Section 1776, and as set forth in 8 CCR Section 16400(e);
(5) Withhold monies. See Labor Code Section 1727;
(6) Ensure that public works projects are not split or separated into smaller work orders or projects for the purpose of evading the applicable provisions of Labor Code Section 1771;
(7) Deny the right to bid on public work contracts to contractors or subcontractors who have violated public work laws, as set forth in Labor Code Section 1777.7;
(8) Not permit workers on public works to work more than eight hours a day or 40 hours in any one calendar week, unless compensated at not less than time and a half as set forth in Labor Code Section 1815.
Exception: If the prevailing wage determination requires a higher rate of pay for overtime work than is required under Labor Code Section 1815, then that higher overtime rate must be paid [as specified in 16200(a)(3)(F)];
(9) Not take or receive any portion of the workers' wages or accept a fee in connection with a public works project, as set forth in Labor Code Sections 1778 and 1779;
(10) Comply with those requirements as specified in Labor Code Sections 1776(g), 1777.5, 1810, 1813, and 1860; and
(11) Other requirements imposed by law.

THE CONTRACTOR AND SUBCONTRACTOR SHALL:

(1) Pay not less than the prevailing wage to all workers, as defined in the California Code of Regulations Section 16000(a), and as set forth in Labor Code Sections 1771 and 1774;
(2) Comply with the provisions of Labor Code Sections 1773.5, 1775, and 1777.5 regarding public works job sites;
(3) Provide workers' compensation coverage as set forth in Labor Code Section 1861;
(4) Comply with Labor Code Sections 1778 and 1779 regarding receiving a portion of wages or acceptance of a fee;
(5) Maintain and make available for inspection payroll records, as set forth in Labor Code Section 1776;
(6) Pay workers overtime pay, as set forth in Labor Code Section 1815 or as provided in the collective bargaining agreement adopted by the Director as set forth in 8 CCR Section 16200(a)(3);
(7) Comply with Section 16101 of these regulations regarding discrimination.
(8) Be subject to provisions of Labor Code Section 1777.7 which specifies the penalties imposed on a contractor who willfully fails to comply with provisions of Section 1777.5;
(9) Comply with those requirements as specified in Labor Code Sections 1810 and 1813; and
(10) Comply with other requirements imposed by law.

APPRENTICE TRAINING:

SEE LABOR CODE SECTION 1777.5 (e)

Prior to commencing work on a contract for public works, every contractor shall submit contract award information (via submittal of a DAS-140) to an applicable apprenticeship program that can supply apprentices to the site of the public work. The information submitted shall include an estimate of journeyman hours to be performed under the contract, the number of apprentices proposed to be employed, and the approximate dates the apprentices would be employed. A copy of this information shall also be submitted to the awarding body if requested by the awarding body. Within 60 days after concluding work on the contract, each contractor and subcontractor shall submit to the awarding body, if requested, and to the apprenticeship program a verified statement of the journeyman and apprentice hours performed on the contract. The information under this subdivision shall be public. The apprenticeship programs shall retain this information for 12 months.

APPRENTICE TRAINING CONTRIBUTION REQUIREMENTS:

SEE CALIFORNIA CODE OF REGULATIONS: TITLE 8, ARTICLE 4,
16200(G) **Wage rates, training contributions and apprenticeship contributions.**

Apprenticeship rates shall be determined by the Director of Industrial Relations using apprentice wage standards set forth in the collective bargaining agreement and/or approved by the California Apprenticeship Council. A contractor or subcontractor on a public works contract must pay training fund contributions or apprenticeship contributions in one of the following manners:

1. Into the appropriate craft apprenticeship program in the area of the site of the public work; or
2. An equivalent amount shall be paid to the California Apprenticeship Council (CAC) administered by DAS (if the trust fund is unable to accept such contributions).
3. If neither of the above will accept the funds, cash pay shall be as provided for in the California Code of Regulations Section 16200(a)(3)(I).

SEE CALIFORNIA CODE OF REGULATIONS: TITLE 8, ARTICLE 10, SECTION 230.2
§230.2. **Payment of Apprenticeship Training Contributions to the Council.**

(a) Contractors who are neither required nor wish to make apprenticeship training contributions to the applicable local training trust fund shall make their training contributions to the Council. Contractors may refer to the Director of the Department of Industrial Relations applicable prevailing wage determination for the amount owed for each hour of work performed by journeymen and apprentices in each apprenticeable occupation.

(b) Training contributions to the Council are due and payable on the 15th day of each month for work performed during the preceding month.

(c) Training contributions to the Council shall be paid by check and shall be accompanied by a completed CAC-2 Form, Training Fund Contributions or contain the following information:
   (1) The name, address, and telephone number of the contractor making the contribution.
   (2) The contractor's license number.
   (3) The name and address of the public agency that awarded the contract.
   (4) The jobsite location, including the county where the work was performed.
   (5) The contract or project number.
   (6) The time period covered by the enclosed contributions.
   (7) The contribution rate and total hours worked by apprenticeable occupation.

CERTIFYING PERSON

SEE CALIFORNIA CODE OF REGULATIONS: TITLE 8, GROUP 3, ARTICLE 1, SECTION 16000 DEFINITIONS.

A person with the authority to affirm under penalty of perjury that the records provided, depict truly, fully and correctly the type of work performed, the hours worked, days worked and amounts paid.

CHANGES TO PREVAILING RATE AFTER AWARD

SEE LABOR CODE SECTION: 1773.6

1773.6. If during any quarterly period the Director of Industrial Relations shall determine that there has been a change in any prevailing rate of per diem wages in any locality, he shall make such change available to the awarding body and his determination shall be final. Such determination by the Director of Industrial Relations shall not be effective as to any contract for which the notice to bidders has been published. *Exceptions: classifications marked as double asterisks.*

CREDITS, FOR FRINGE BENEFIT PAYMENTS

SEE CALIFORNIA CODE OF REGULATIONS: TITLE 8, GROUP3, ARTICLE 4

16200(i) Credit Available For Actual Payment of Fringe Benefit Costs up to the Prevailing Amount. The contractor obligated to pay the full prevailing rate of per diem wages may take credit for amounts up to the total of all fringe benefit amounts listed as prevailing in the appropriate wage determination. This credit may be taken only as to amounts which are actual payments under Employer Payments Section 16000(1)-(3). In the event that the total of Employer Payments by a contractor for the fringe benefits listed as prevailing is less than the aggregate amount set out as prevailing in the wage determination, the contractor must pay the difference directly to the employee. No amount of credit for payments over the aggregate amount of employer payments shall be taken nor shall any credit decrease the amount of direct payment of hourly wages of those amounts found to be prevailing for straight time or overtime wages.

THE RULE:

The contractor can pay amounts for individual benefits different than the state shows in the wage reports so long as it is not more than the total amount permitted for all benefits. Any contractor paid amount less than the total benefit requirements listed in the state wage reports must be paid to the employee.

EMPLOYEE'S SUBJECT TO PREVAILING WAGES

SEE LABOR CODE SECTION 1771, 1772 & 1776

All workers on the project shall be paid the wage of the trade they are most closely related to. This includes: any one on site, and off site even at remote manufacturing facilities.

1771. Except for public works projects of one thousand dollars ($1,000) or less, not less than the general prevailing rate of per diem wages for work of a similar character in the locality in which the public work is performed, and not less than the general prevailing rate of per diem wages for holiday and overtime work fixed as provided in this chapter, shall be paid to all workers employed on public works.

1772. Workers employed by contractors or subcontractors in the execution of any contract for public work are deemed to be employed upon public work.

1776. (a) Each contractor and subcontractor shall keep an accurate payroll record, showing the name, address, social security number, work classification, and straight time and overtime hours worked each day and week, and the actual per diem wages paid to each journeyman, apprentice, worker, or other employee employed by him or her in connection with the public work.

EMPLOYER PAYMENTS

SEE CALIFORNIA CODE OF REGULATIONS: TITLE 8, ARTICLE 1, SECTION 16000 DEFINITIONS

(1) The rate of contribution irrevocably made by a contractor or subcontractor to a trustee or to a third person pursuant to a fund, plan, or program for the benefit of employees, their families and dependents, or retirees;

(2) The rate of costs to the contractor or subcontractor which may be reasonably anticipated in providing benefits to employees, their families and dependents or to retirees pursuant to an enforceable commitment or agreement to carry out a financially responsible plan or program which was communicated in writing to the workers affected; and

(3) The rate of contribution irrevocably made by the contractor or subcontractor for apprenticeship or other training programs authorized by Section 3071 and/or 3093 of the Labor Code.

FRINGE BENEFIT PAYMENT REQUIREMENTS

SEE CALIFORNIA CODE OF REGULATIONS: TITLE 8, ARTICLE 1, SECTION 16000 DEFINITIONS

All fringe benefits must be irrevocably paid to an authorized fund or to the employee.
No unpaid amounts are allowed.

FRINGE BENEFITS INCLUDE

CALIFORNIA CODE OF REGULATIONS: TITLE 8, ARTICLE 1, SECTION 16000. DEFINITIONS

The prevailing rate of employer payments for any or all programs or benefits for employees, their families and dependents, and retirees which are of the types enumerated below:

(1) Medical and hospital care, prescription drugs, dental care, vision care, diagnostic services, and other health and welfare benefits;
(2) Retirement plan benefits;
(3) Vacations and holidays with pay, or cash payments in lieu thereof;
(4) Compensation for injuries or illnesses resulting from occupational activity;
(5) Life, accidental death and dismemberment, and disability or sickness and accident insurance;
(6) Supplemental unemployment benefits;
(7) Thrift, security savings, supplemental trust, and beneficial trust funds otherwise designated, provided all of the money except that used for reasonable administrative expenses is returned to the employees;
(8) Occupational health and safety research, safety training, monitoring job hazards, and the like, as specified in the applicable collective bargaining agreement;
(9) See definition of "Employer Payments," (3).
(10) Other bonafide benefits for employees, their families and dependents, or retirees as the Director may determine; and
(11) Travel time and subsistence pay as provided for in Labor Code Section 1773.8.

FRINGE BENEFITS DO NOT INCLUDE

CALIFORNIA CODE OF REGULATIONS: TITLE 8, ARTICLE 1, SECTION 16000. DEFINITIONS

The term "general prevailing rate of per diem wages" does not include any employer payments for:

(1) Job related expenses other than travel time and subsistence pay;
(2) Contract administration, operation of hiring halls, grievance processing, or similar purposes except for those amounts specifically earmarked and actually used for administration of those types of employee or retiree benefit plans enumerated above;
(3) Union, organizational, professional or other dues except as they may be included in and withheld from the basic taxable hourly wage rate;
(4) Industry or trade promotion;
(5) Political contributions or activities;

(6) Any benefit for employees, their families and dependents, or retirees including any benefit enumerated above where the contractor or subcontractor is required by Federal, State, or local law to provide such benefit; or
(7) Such other payments as the Director may determine to exclude.

PAYROLL RECORDS INCLUDE

CALIFORNIA CODE OF REGULATIONS: TITLE 8, ARTICLE 1, SECTION 16000. DEFINITIONS

All time cards, bank certified cancelled checks, cash receipts, trust fund forms, books, documents, schedules, forms, reports, receipts or other evidences which reflect job assignments, work schedules by days and hours, and the disbursement by way of cash, check, or in whatever form or manner, of funds to a person(s) by job classification and/or skill pursuant to a public works project.

PERSONS REQUIRED TO RECEIVE PREVAILING WAGES

SEE LABOR CODE SECTIONS:

1771. Prevailing wages shall be paid to all workers employed on public works.
1774. The contractor to whom the contract is awarded, and any subcontractor under him, shall pay not less than the specified prevailing rates of wages to all workmen employed in the execution of the contract.

WITHHOLDING PAYMENTS, JUSTIFICATION

SEE LABOR CODE SECTION: 1727 & 1771.5(b),(5)

SEE CALIFORNIA CODE OF REGULATIONS: TITLE 8, ARTICLE 5, SECTION 16435

16435(a) "Withhold" means to cease payments by the awarding body, or others who pay on its behalf, or agents, to the general contractor. Where the violation is by a subcontractor, the general contractor shall be notified of the nature of the violation and reference made to its rights under Labor Code Section 1729.

(1) "Contracts." Except as otherwise provided by agreement, only contracts under a single master contract, or contracts entered into as stages of a single project, may be the subject of withholding.
(2) "Delinquent payroll records" means those not submitted on the date set in the contract.
(3) "Inadequate payroll records" are any one of the following:
(4) A record lacking the information required by Labor Code Section 1776;
(5) A record which contains the required information but is not certified, or certified by someone not an agent of the contractor or subcontractor;
(6) A record remaining uncorrected for one payroll period, after the awarding body has given the contractor notice of inaccuracies detected by audit or record review, provided, however, that prompt correction will stop any duty to withhold if such inaccuracies do not amount to one percent of the entire Certified Weekly Payroll in dollar value and do not affect more than half the persons listed as workers employed on that Certified Weekly Payroll, as defined in Labor Code Section 1776 and Title 8 CCR Section 16401.

DIRECTOR OF INDUSTRIAL RELATIONS PRECEDENTIAL DECISIONS WHICH REQUIRE PREVAILING WAGES:

Decision 92-036: stands for the payment of out-of-state workers if they are working on California "Public Works"

Decision 93-019: stands for the payment of truck drivers removing, delivering or relocating material on "Public Works"

Decision 94-017: stands for the payment of waste processors off site if the waste is exclusively from "Public Works"

COURT DECISIONS:

Standard Traffic Services v. Department of Transportation (case 132667) Shasta: partners are due prevailing wages if working on "Public Works"

STATE OF CALIFORNIA
DEPARTMENT OF INDUSTRIAL RELATIONS
DIVISION OF APPRENTICESHIP STANDARDS
28 CIVIC CENTER PLAZA, ROOM 525
SANTA ANA, CA 92701

TO ALL PUBLIC WORKS CONTRACTORS

Congratulations on having been awarded a public works project.

The Division of Apprenticeship Standards wishes to bring to your attention your responsibilities under California Labor Code Section 1777.5 Apprentices on Public Works. (Excerpts from California Labor Code relating to apprentices on public works. DAS-10 is attached).

Compliance with California Labor Code Section 1777.5 requires all public works contractors and subcontractors to:

- Submit contract award information within 10 days of contract award, to the applicable Joint Apprenticeship Committee, which shall include an estimate of Journeyman hours to be performed under the contract, the number of apprentices to be employed, and the approximate dates the apprentices will be employed. This information may be submitted on the attached form. DAS 140.

- Employ apprentices on the public work in a ratio to journeymen of no less than one hour of apprentices work for every five hours of labor performed by a journeyman.

- Pay the apprentice rate on public works projects only to those apprentices who are registered as defined in Labor Code Section 3077.

- Contribute to the training fund in the amount identified in the Prevailing Wage Rate publication for journeymen and apprentices. Contractors who choose not to contribute to the local training trust fund must make their contribution to the California Apprenticeship Council (CAC) at P.O. Box 420603, San Francisco, CA 94142.

Training fund contributions to the CAC are due and payable on the 15th day of each month for work performed during the preceding month.

Training fund contributions to the CAC shall be paid by check and shall be accompanied by a completed form CAC-2 (attached).

Failure to comply with the provisions of the Labor Code Section 1777.5 may result in the loss of the right to bid on all public works projects for a period of one to three years and the imposition of a civil penalty of $100.00 for each calendar day of noncompliance. Contractors should provide a copy of this material to each subcontractor.

If the Division of Apprenticeship Standards can be of assistance to you, please contact our office at (714) 558-4126.

STATE OF CALIFORNIA – DEPARTMENT OF INDUSTRIAL RELATIONS – DIVISION OF APPRENTICESHIP STANDARDS

EXERPTS FROM THE CALFORNIA LABOR CODE RELATING TO APPRENTICES ON PUBLIC WORKS

Chapter 1 of Division 2

APPRENTICES ON PUBLIC WORKS

1773.3. An awarding agency whose public works contract falls within the jurisdiction of Section 1777.5 shall, within five days of the award, send a copy of the award to the Division of Apprenticeship Standards. When specifically requested by a local joint apprenticeship committee, the division shall notify the local joint apprenticeship committee regarding all such awards applicable to the joint apprenticeship committee making the request. Within five days of a finding of any discrepancy regarding the ratio of apprentices to journeymen, pursuant to the certificated fixed number of apprentices to journeymen, the awarding agency shall notify the Division of Apprenticeship Standards.

1776. (a) Each contractor and subcontractor shall keep accurate payroll records, showing the name, address, social security number, work classification, straight time and overtime hours worked each day and week, and the actual per diem wages paid to each journeyman, apprentice, worker, or other employee employed by him or her in connection with the public work. Each payroll record shall contain or be verified by a written declaration that it is made under penalty of perjury, stating both of the following:

(1) The information contained in the payroll record is true and correct.

(2) The employer has complied with the requirements of Sections 1771, 1811, and 1815 for any work performed by his or her employees on the public works project.

(b) The payroll records enumerated under subdivision (a) shall be certified and shall be available for inspection at all reasonable hours at the principal office of the contractor on the following basis:

(1) A certified copy of an employee's payroll record shall be made available for inspection or furnished to the employee or his or her authorized representative on request.

(2) A certified copy of all payroll records enumerated in subdivision (a) shall be made available for inspection or furnished upon request to a representative of the body awarding the contract, the Division of Labor Standards Enforcement, and the Division of Apprenticeship Standards of the Department of Industrial Relations.

(3) A certified copy of all payroll records enumerated in subdivision (a) shall be made available upon request by the public for inspection or for copies thereof. However, a request by the public shall be made through either the body awarding the contract, the Division of Apprenticeship Standards, or the Division of Labor Standards Enforcement. If the requested payroll records have not been provided pursuant to paragraph (2), the requesting party shall, prior to being provided the records, reimburse the costs of preparation by the contractor, subcontractors, and the entity through which the request was made. The public shall not be given access to the records at the principal office of the contractor.

(c) The certified payroll records shall be on forms provided by the Division of Labor Standards Enforcement or shall contain the same information as the forms provided by the division.

(d) A contractor or subcontractor shall file a certified copy of the records enumerated in subdivision (a) with the entity that requested the records within 10 days after receipt of a written request.

(e) Any copy of records made available for inspection as copies and furnished upon request to the public or any public agency by the awarding body, the Division of Apprenticeship Standards, or the Division of Labor Standards Enforcement shall be marked or obliterated in a manner so as to prevent disclosure of an individual's name, address, and social security number. The name and address of the contractor awarded the contract or the subcontractor performing the contract shall not be marked or obliterated.

(f) The contractor shall inform the body awarding the contract of the location of the records enumerated under subdivision (a), including the street address, city and county, and shall, within five working days, provide a notice of a change of location and address.

(g) The contractor or subcontractor shall have 10 days in which to comply subsequent to receipt of a written notice requesting the records enumerated in subdivision (a). In the event that the contractor or subcontractor fails to comply within the 10-day period, he or she shall, as a penalty to the state or political subdivision on whose behalf the contract is made or awarded, forfeit twenty-five dollars ($25) for each calendar day, or portion thereof, for each worker, until strict compliance is effectuated. Upon the request of the Division of Apprenticeship Standards or the Division of Labor Standards Enforcement, these penalties shall be withheld from progress payments then due. A contractor is not subject to a penalty assessment pursuant to this section due to the failure of a subcontractor to comply with this section.

(h) The body awarding the contract shall cause to be inserted in the contract stipulations to effectuate this section.

(i) The director shall adopt rules consistent with the California Public Records Act, (Chapter 3.5 (commencing with Section 6250), Division 7, Title 1, Government Code) and the Information Practices Act of 1977, (Title 1.8 (commencing with Section 1798), Part 4, Division 3, Civil Code) governing the release of these records, including the establishment of reasonable fees to be charged for reproducing copies of records required by this section.

(j) This section shall remain in effect only until January 1, 2003, and as of that date is repealed, unless a later enacted statute, that is enacted before January 1, 2003, deletes or extends that date.

1777.5. (a) Nothing in this chapter shall prevent the employment of properly registered apprentices upon public works.

(b) Every apprentice employed upon public works shall be paid the prevailing rate of per diem wages for apprentices in the trade to which he or she is registered and shall be employed only at the work of the craft or trade to which he or she is registered.

(c) Only apprentices, as defined in Section 3077, who are in training under apprenticeship standards that have been approved by the Chief of the Division of Apprenticeship Standards and who are parties to written apprentice agreements under Chapter 4 (commencing with Section 3070) of Division 3 are eligible to be employed at the apprentice wage rate on public works. The employment and training of each apprentice shall be in accordance with either (1) the apprenticeship standards and apprentice agreements under which he or she is training or (2) the rules and regulations of the California Apprenticeship Council.

(d) When the contractor to whom the contract is awarded by the state or any political subdivision, in performing any of the work under the contract, employs workers in any apprenticeable craft or trade, the contractor shall employ apprentices in at least the ratio set forth in this section and may apply to any apprenticeship program in the craft or trade that can provide apprentices to the site of the public work for a certificate approving the contractor under the apprenticeship standards for the employment and training of apprentices in the area or industry affected. However, approval or denial of the apprenticeship program shall be subject to review by the Administrator of Apprenticeship. The apprenticeship program or programs, upon approving the contractor, shall arrange for the dispatch of apprentices to the contractor. A contractor covered by an apprenticeship program's standards shall not be required to submit any additional application in order to include additional public works contracts under that the program. "Apprenticeable craft or trade," as used in this section, means a craft or trade determined as an apprenticeable occupation in accordance with rules and regulations prescribed by the California Apprenticeship Council. As used in this section, "contractor" includes any subcontractor under a contractor who performs any public works not excluded by subdivision (o).

(e) Prior to commencing work on a contract for public works, every contractor shall submit contract award information to an applicable apprenticeship program that can supply apprentices to the site of the public work. The information submitted shall include an estimate of journeyman hours to be performed under the contract, the number of apprentices proposed to be employed, and the approximate dates the apprentices would be employed. A copy of this information shall also be submitted to the awarding body if requested by the awarding body. Within 60 days after concluding work on the contract, each contractor and subcontractor shall submit to the awarding body, if requested, and to the apprenticeship program a verified statement of the journeyman and apprentice hours performed on the contract. The information under this subdivision shall be public. The apprenticeship programs shall retain this information for 12 months.

(f) The apprenticeship program that can supply apprentices to the area of the site of the public work shall ensure equal employment and affirmative action in apprenticeship for women and minorities.

(g) The ratio of work performed by apprentices to journeymen employed in a particular craft or trade on the public work may be no higher than the ratio stipulated in the apprenticeship standards under which the apprenticeship program operates where the contractor agrees to be bound by those standards, but, except as otherwise provided in this section, in no case shall the ratio be less than one hour of apprentice work for every five hours of journeyman work.

(h) This ratio of apprentice work to journeyman work shall apply during any day or portion of a day when any journeyman is employed at the jobsite and shall be computed on the basis of the hours worked during the day by journeymen so employed. Any work performed by a journeyman in excess of eight hours per day or 40 hours per week shall not be used to calculate the ratio. The contractor shall employ apprentices for the number of hours computed as above before the end of the contract or, in the case of a subcontractor, before the end of the subcontract. However, the contractor shall endeavor, to the greatest extent possible, to employ apprentices during the same time period that the journeymen in the same craft or trade are employed at the jobsite. Where an hourly apprenticeship ratio is not feasible for a particular craft or trade, the Division of Apprenticeship Standards, upon application of an apprenticeship program, may order a minimum ratio of not less than one apprentice for each five journeymen in a craft or trade classification.

(i) A contractor covered by this section that has agreed to be covered by an apprenticeship program's standards upon the issuance of the approval certificate, or that has been previously approved for an apprenticeship program in the craft or trade, shall employ the number of apprentices or the ratio of apprentices to journeymen stipulated in the applicable apprenticeship standards, but in no event less than the 1-to-5 ratio required by subdivision (g).

(j) Upon proper showing by a contractor that he or she employs apprentices in a particular craft or trade in the state on all of his or her contracts on an annual average of not less than one hour of apprentice work for every five hours of labor performed by journeymen, the Division of Apprenticeship Standards may grant a certificate exempting the contractor from the 1-to-5 hourly ratio, as set forth in this section for that craft or trade.

(k) An apprenticeship program has the discretion to grant to a participating contractor or contractor association a certificate, which shall be subject to the approval of the Administrator of Apprenticeship, exempting the contractor from the 1-to-5 ratio set forth in this section when it finds that any one of the following conditions is met:

(1) Unemployment for the previous three-month period in the area exceeds an average of 15 percent.

(2) The number of apprentices in training in the area exceeds a ratio of 1 to 5.

(3) There is a showing that the apprenticeable craft or trade is replacing at least one-thirtieth of its journeymen annually through apprenticeship training, either on a statewide basis or on a local basis.

(4) Assignment of an apprentice to any work performed under a public works contract would create a condition that would jeopardize his or her life or the life, safety, or property of fellow employees or the public at large, or the specific task to which the apprentice is to be assigned is of a nature that training cannot be provided by a journeyman.

(l) When an exemption is granted pursuant to subdivision (k) to an organization that represents contractors in a specific trade from the 1-to-5 ratio on a local or statewide basis, the member contractors will not be required to submit individual applications for approval to local joint apprenticeship committees, if they are already covered by the local apprenticeship standards.

(m) A contractor to whom a contract is awarded, who, in performing any of the work under the contract, employs journeymen or apprentices in any apprenticeable craft or trade shall contribute to the California Apprenticeship Council the same amount that the director determines is the prevailing amount of apprenticeship training contributions in the area of the public works site. A contractor may take as a credit for payments to the council any amounts paid by the contractor to an approved apprenticeship program that can supply apprentices to the site of the public works project. The contractor may add the amount of the contributions in computing his or her bid for the contract. At the end of each fiscal year the California Apprenticeship Council shall make grants to each apprenticeship program in proportion to the number of hours of training provided by the program for which the program did not receive contributions, weighted by the regular rate of contribution for the program. These grants shall be made from funds collected by the California Apprenticeship Council during the fiscal year pursuant to this subdivision from contractors that employed registered apprentices but did not contribute to an approved apprenticeship program. All these funds received during the fiscal year shall be distributed as grants.

(n) The body awarding the contract shall cause to be inserted in the contract stipulations to effectuate this section. The stipulations shall fix the responsibility of compliance with this section for all apprenticeable occupations with the prime contractor.

(o) This section does not apply to contracts of general contractors or to contracts of specialty contractors not bidding for work through a general or prime contractor when the contracts of general contractors or those specialty contractors involve less than thirty thousand dollars ($30,000) or 20 working days.

(p) All decisions of an apprenticeship program under this section are subject to Section 3081.

1777.6. It shall be unlawful for an employer or a labor union to refuse to accept otherwise qualified employees as registered apprentices on any public works, on the ground of the race, religious creed, color, national origin, ancestry, sex, or age, except as provided in Section 3077, of such employee.

1777.7. (a) A contractor or subcontractor that knowingly violates Section 1777.5 shall forfeit as a civil penalty an amount not exceeding one hundred dollars ($100) for each full calendar day of noncompliance. The amount of this penalty shall be based on consideration whether the violation was a good faith mistake due to inadvertence. A contractor or subcontractor that knowingly commits a second or subsequent violation of Section 1777.5 within a three-year period, where the noncompliance results in apprenticeship training not being provided as required by this chapter, shall forfeit as a civil penalty the sum of not more than three hundred dollars ($300) for each full calendar day of noncompliance. Notwithstanding Section 1727, upon receipt of a determination that a civil penalty has been imposed, the awarding body shall withhold the amount of the civil penalty from contract progress payments then due or to become due.

(b) (1) In the event a contractor or subcontractor is determined by the Administrator of Apprenticeship to have knowingly violated any provision of Section 1777.5, the Administrator shall deny to the contractor or subcontractor, both individually and in the name of the business entity under which the contractor or subcontractor is doing business, the right to bid on or receive any public works contract for a period of up to one year for the first violation and for a period of up to three years for a second or subsequent violation. Each period of debarment shall run from the date the determination of noncompliance by the Administrator of Apprenticeship.

(2) An affected contractor or subcontractor may obtain a review of the debarment or civil penalty by transmitting a written request to the office of the Administrator within 30 days after service of the order of debarment or civil penalty. If the Administrator receives no request for review within 30 days after service, the order of debarment or civil penalty shall become final for the period authorized.

(3) Within 20 days of the timely receipt of a request for hearing, the Administrator shall provide the contractor or subcontractor the opportunity to review any evidence the Administrator may offer at the hearing. The Administrator shall also promptly disclose to the contractor or subcontractor any nonprivileged documents obtained after the 20-day time limit.

(4) Within 90 days of the timely receipt of the a request for hearing, a hearing shall be commenced before an impartial hearing officer designated by the Administrator and possessing the qualifications of an administrative law judge pursuant to Section 11502 of the Government Code. The contractor or subcontractor shall have the burden of showing compliance with Section 1777.5. The decision to debar shall be reviewed by a hearing officer or court only for abuse of discretion.

(5) Within 45 days of the conclusion of the hearing, the hearing officer shall issue a written decision affirming, modifying, or dismissing the debarment or civil penalty. The decision shall contain a notice of findings, findings, and an order. This decision shall be deemed the final decision of the Administrator and shall be served on all parties and the awarding body pursuant to Section 1013 of the Code of Civil Procedure by first-class mail at the last known address of the party on file with the Administrator. Within 15 days of issuance of the decision, the hearing officer may reconsider or modify the decision to correct an error, except that a clerical error may be corrected at any time.

(6) An affected contractor or subcontractor may obtain review of the final decision of the Administrator by filing a petition for a writ of mandate to the appropriate superior court pursuant to Section 1094.5 of the Code of Civil Procedure within 45 days after service of the final decision to debar or to assess a civil penalty. If no petition for a writ of mandate is filed within 45 days after service of the final decision, the order shall become final. If the petitioner claims that the findings are not supported by the evidence, abuse of discretion is established if the court determines that the findings are not supported by substantial evidence in light of the entire record.

(7) The Administrator may file a certified copy of a final order with the clerk of the superior court in any county in which the affected contractor or subcontractor has property or has or had a place of business.

(c) If a subcontractor is found to have violated Section 1777.5, the prime contractor of the project is not liable for any penalties under subdivision (a), unless the prime contractor had knowledge of the subcontractor's failure to comply with the provisions of Section 1777.5 or unless the prime contractor fails to comply with any of the following requirements:

(1) The contract executed between the contractor and the subcontractor or the performance of work on the public works project shall include a copy of the provisions of Sections 1771, 1775, 1776, 1777.5, 1813, and 1815.

(2) The contractor shall continually monitor a subcontractor's use of apprentices required to be employed on the public works project pursuant to subdivision (d) of Section 1777.5, including, but not limited to, periodic review of the certified payroll of the subcontractor.

(3) Upon becoming aware of a failure of the subcontractor to employ the required number of apprentices, the contractor shall take corrective action, including, but not limited to, retaining funds due the subcontractor for work performed on the public works project until the failure is corrected.

(4) Prior to making the final payment to the subcontractor for work performed on the public works project, the contractor shall obtain an affidavit signed under penalty of perjury from the subcontractor that the subcontractor has employed the required number of apprentices on the public works project.

(d) In lieu of the penalty provided for in subdivision (a) or (b), the director may for a first-time violation and with the concurrence of the apprenticeship program, order the contractor or subcontractor to provide apprentice employment equivalent to the work hours that would have been provided for apprentices during the period of noncompliance.

(e) Any funds withheld by the awarding body pursuant to this section shall be deposited in the General Fund if the awarding body is a state entity, or in the equivalent fund of an awarding body if the awarding body is an entity other than the state.

(f) The interpretation and enforcement of Section 1777.5 and this section shall be in accordance with the rules and procedures of the California Apprenticeship Council.

Division of Apprenticeship Standards

APPRENTICES ON PULIC WORKS

SUMMARY OF REQUIREMENTS

Compliance with California Labor Code Section 1777.5 requires all public works contractors and subcontractors to:

- Submit contract award information to the applicable joint apprenticeship committee, including an estimate of the journeyman hours to be performed under the contract, the number of apprentices to be employed, and the approximate dates the apprentices will be employed.

  The contract award information shall be in writing, and shall be provided to the applicable apprenticeship committee within 10 days of the date of the agreement or contract award, but in no event later than the first day in which the contractor has workers employed upon the public work. (California Code of Regulations, Title 8, Section 230.)

- Employ apprentices on the public work in a ratio to journeymen of no less than one hour of apprentice work for every five hours of labor performed by a journeyman.

- Contribute to the training fund in the amount identified in the Prevailing Wage Rate publication for journeymen and apprentices. Contractors who choose not to contribute to the local training trust fund must make their contributions to the California Apprenticeship Council, P.O. Box 420603, San Francisco, CA 94142. Training contributions to the Council are due and payable on the 15th of the month for work performed during the preceding month.

  Training contributions to the Council shall be paid by check and shall be accompanied by a completed CAC2 form, Training Fund Contributions, or the following information (California Code of Regulations, Title 8, Section 230.2 c):

  1. Name, address and telephone number of the contractor making the contribution.
  2. Contractor's license number.
  3. Name and address of the public agency that awarded the contract.
  4. Jobsite location, including the county where the work was performed.
  5. Contract or project number
  6. Time period covered by the enclosed contributions.
  7. Contribution rate and total hours worked by the apprenticable occupation(s).

- Pay the apprentice rate on public works projects only to those apprentices who are registered, as defined in Labor Code Section 3077:

Sec. 3077. The term "apprentice" as used in this chapter means a person at least 16 years of age who has entered into a written agreement, in this chapter called an "apprentice agreement," with an employer or program sponsor. The term of apprenticeship for each apprenticeable occupation shall be approved by the chief, and in no case shall provide for no less than 2,000 hours or reasonably continuous employment for such person for his or her participation in an approved program of training through employment and through education in related and supplemental subjects.

FORMS SUBMITTAL SCHEDULE

Document Name	Frequency	Submittal Due Date	Notes:
LCP Checklist	1-time submittal	At pre-construction/LCP meeting	Must be submitted by all listed contractors and subcontractors
Form DAS-140 Public Works Contract Award Info **Form DAS-142** (recommended)	1-time submittal	Prior to start of work	A copy MUST be forwarded to the Labor Compliance Officer *A DAS-142, the form to "request for dispatch of an apprentice" is not a required submittal; however, making a request for the dispatch of an apprentice IS REQUIRED (verbal or written). Therefore, the submittal of a DAS-142 is recommended, since it serves as proof the request was made.*
Fringe Benefit Statement	1-time submittal, then as benefit amounts change	Submitted with 1st CPR, then as contribution amount changes	In the event fringe benefits are paid "in cash" to workers, contractor should indicate "fringe benefits paid in cash" across this form. Note: Training contributions should be paid to the CAC or an approved apprenticeship training program; not to the employee.
Statement of Compliance **Certified Payroll Report (CPR)** **Statement of Non-Performance**	Weekly	Within 10 days of end of payroll period	CPRs to be submitted to the Labor Compliance Officer within 10 days from the end of the payroll period. All documents modifying the payrolls must accompany the CPR; these include but are not limited to: approved "make-up days," "special-shifts," "alternative work schedules." All inactive workweeks (after the submission of the 1st CPR) should be reported on a "Statement of Non-Performance"
Owner-Operators Statement of Compliance **Owner-Operator CPR**	Weekly	(If applicable) Within 10 days of end of payroll period	If applicable, all Owner-Operators are to be reported on these forms. Forward forms to the Labor Compliance Officer weekly.
Employer's Monthly Report to Trustees **Copy of the contribution check**	Monthly	Within 15 days of end of reporting month	Submit monthly reports sent to the trust/plan along with a copy of the contribution check, to the Labor Compliance Officer.
Form CAC-2 Training Funds Contributions **Copy of the contribution check**	Monthly	By the 15th of each month, for work performed in the preceding month	A copy MUST be forwarded to the Labor Compliance Officer Monthly submittal should reflect the accurate monthly man-hours performed during the previous month. The CAC-2 form must be accompanied with a copy of the contribution check.
List of Sub-Tier Subcontractors	1-time submittal, then as subs are brought on	Prior to start of work	Must be submitted by all contractors. Indicate which subcontractors the contractor intends to utilize in execution of its project work
Public Works Affidavit	1-time submittal	At conclusion of work	To be submitted to the Labor Compliance Officer by the prime and each sub at the conclusion of the work and prior to release of retention.

CALIFORNIA CODE OF REGULATIONS CHECKLIST

LABOR COMPLIANCE PROGRAM **The Solis Group** 234 North El Molino Avenue, Suite 202 Pasadena, CA 91101 Phone: (626) 685-6989 Fax: (626) 685-6985	

CHECKLIST OF LABOR LAW REQUIREMENTS FOR REVIEW AT JOB START MEETINGS

(In accordance with CCR Section 16430)

The federal and state labor law requirements applicable to the contract are composed of, but not limited to, the following:

LCP Checklist	Contractor's Initials
1. Payment of Prevailing Wage Rates The award of a public works contract requires that all workers employed on the project be paid not less than the specified general prevailing wage rates by the contractor and its subcontractors per Labor Code Section 1770. The contractor is responsible for obtaining and complying with all applicable general prevailing wage rates for trades workers and any rate changes which may occur during the term of the contract. Prevailing wage rates and rate changes are to be posted at the job site for workers to view or be provided to workers upon request. By signing the LCP Checklist, all contractors and subcontractors are assenting to obtaining the correct prevailing wage rates.	
2. Apprentices It is the duty of the contractor and subcontractors to employ registered apprentices on public works projects per Labor Code Section 1777.5;	
3. Penalties Penalties, including forfeitures and debarment, shall be imposed for contractor/subcontractor failure to pay prevailing wages, failure to maintain and submit accurate certified payroll records upon request, failure to employ apprentices, and failure to pay employees for all hours worked at the correct prevailing wage rate, in accordance with Labor Code Sections 1775, 1776, 1777.7, and 1813.	
4. Certified Payroll Records Per Labor Code Section 1776, contractors and subcontractors are required to keep accurate payroll records which reflect the name, address, social security number, and work classification of each employee; the straight time and overtime hours worked each day and each week; the fringe benefits; and the actual per diem wages paid to each journeyperson, apprentice, worker, or other employee hired in connection with a public works project. In an effort to prove that per diem wages were paid to the workers on behalf of the contractor, by signing the LCP Checklist the contractor is assenting to the fact that it will provide TSG with copies of bank certified cancelled checks make to workers, the California Apprenticeship Council, and/or Union or other trust funds, as required by the California Labor Code §1776(a)(2)(b), and the California Department of Industrial Relations (Chapter 8, Subchapter 3, Article 1, §16000). Employee payroll records shall be certified and shall be made available for inspection at all reasonable hours at the principal office of the contractor/subcontractor, or shall be furnished to any employee, or to his or her authorized representative, on request. Contractors and subcontractors shall maintain their certified payrolls on a weekly basis and shall submit said payrolls to TSG in a timely manner, and at least on a monthly basis. In the event that there has been no work performed during a given week, the Certified Payroll Record shall be annotated "No Work" for that week.	

CALIFORNIA CODE OF REGULATIONS CHECKLIST

5. Nondiscrimination in Employment Prohibitions against employment discrimination are contained in Labor Code Sections 1735 and 1777.6; the Government Code; the Public Contracts Code; and Title VII of the Civil Rights Act of 1964, as amended. All contractors and subcontractors are required to implement equal employment opportunities as delineated below: a. Equal Employment Poster The equal employment poster shall be posted at the job site in a conspicuous place visible to employees and employment applicants for the duration of the project.	
6. Kickbacks Prohibited Per Labor Code Section 1778, contractors and subcontractors are prohibited from accepting, taking wages illegally, or extracting "kickbacks" from employee wages.	
7. Acceptance of Fees Prohibited Contractors and subcontractors are prohibited from exacting any type of fee for registering individuals for public work (Labor Code Section 1779), or for filling work orders on public works contracts (Labor Code Section 1780);	
8. Listing of Subcontractors Contractors are required to list all subcontractors hired to perform work on a public works project when that work is equivalent to more than one-half of one percent of the total effort (Public Contracts Code Section 4104) TSG will request sub-contractor listings for all project contractors reported on the project.	
9. Proper Licensing Contractors and subcontractors are required to be properly licensed. Penalties will be imposed for employing workers while unlicensed (Labor Code Section 1021 and Business and Professions Code Section 7000 et seq. under California Contractors License Law).	
10. Unfair Competition Prohibited Contractors and subcontractors are prohibited from engaging in unfair competition (Business and Professions Code Sections 17200-17208).	
11. Workers' Compensation Insurance All contractors and subcontractors are required to be insured against liability for workers' compensation, or to undertake self-insurance in accordance with the provisions of Labor Code §3700 (LC§1861).	
12. OSHA Contractors and subcontractors are required to comply with the Occupational, Safety and Health laws and regulations applicable to the particular public works project. In accordance with federal and state laws and contract documents, the undersigned contractor herein certifies that it will comply with the foregoing labor law requirements; and fully understands that failure to comply with these requirements will subject it to the penalties cited herein.	
13. Hiring Undocumented Workers Contractors and subcontractors are required to secure proof of eligibility/citizenship from all project workers due to the federal prohibition against hiring undocumented workers.	
14. Itemized Wage Statements to Employees Contractors and subcontractors are required to provide itemized wage statements to their employees under Labor Code Section 226.	
15. Public Works Affidavit Prior to the release of the final payment to the subcontractors, the prime Contractor shall obtain a Public Works Affidavit (signed under penalty of perjury) from the subcontractor stating that the subcontractor paid the specified prevailing wage rates to its workers (CLC §1775.5 (b) (4)).	

Certification:

I acknowledge that I have been informed and are aware of the foregoing requirements and that I am authorized to make and sign this certification.

Contractor Signature:	***Date:***
Labor Compliance Officer's Signature:	***Date:***
Awarding Body:	
Project Name or Number:	

STATEMENT OF COMPLIANCE

Date:_____

I, _____do hereby certify under penalty of perjury:
(Name of signatory party) (Title)

(1) That all the information in this report is true and correct;
(2) That I pay or supervise the payment of the persons reported as employed by _____
(Contractor or Subcontractor)
on the _____, that during the payroll period commencing on the ___ day of _____
(Project)
20 __and ending the ___ day of _____, 20 __, all persons employed on said project have been paid their full weekly wages earned, that no rebates have or will be made either directly or indirectly to or on behalf of said _____ from the full weekly wages earned by any person and that no deductions
(Contractor or Subcontractor)
have been made either directly or indirectly from the full wages earned by any person, other than permissible deductions, as described below.
(3) That any payrolls otherwise under this contract required to be submitted for the above period are correct and complete; that the wage rates for laborers or mechanics contained therein are not less than the applicable wages contained in any wage determination incorporated into the contract; that the classifications set forth therein for each laborer or mechanic conform with the work he or she performed.
(4) That any apprentices employed in the above period are duly registered in a bona fide apprenticeship program registered with a State apprenticeship agency.

(5) That :
(a) WHERE FRINGE BENEFITS ARE PAID TO APPROVED PLANS, FUNDS OR PROGRAMS
_____ In addition to the basic hourly wage rates paid to each laborer or mechanic listed in the above referenced payroll, payment of fringe benefits as listed in the contract have been or will be made to appropriate programs for the benefit of such employees, except as noted in Section 5 (c) below.

(b) WHERE FRINGE BENEFITS ARE PAID IN CASH
_____ Each laborer or mechanic listed in the above referenced payroll has been paid as indicated on the payroll, an amount not less than the sum of the applicable basic hourly wage rate plus the amount of the required fringe benefits as listed in the contract except as noted in Section 5 (c) below:

(c) EXCEPTIONS

EXCEPTION (CRAFT)	EXPLANATION
Remarks:	
Name and Title	Signature

On federally-funded projects, permissible deductions are defined in Regulations, Part 3 (29 CFR Subtitle A), issued by the Secretary of Labor under the Copeland Act, as amended (48 Stat. 948; 63 Stat. 108; 72 Stat. 967; 76 Stat. 357; 40 U.S. C. 276c). The willful falsification of any of the above statements may subject the contractor or subcontractor to civil or criminal prosecution (Section 1001 of Title 118 and Section 231 of Title 31 of the United States Code.)

CERTIFIED PAYROLL

NAME OF CONTRACTOR/SUBCONTRACTOR	ADDRESS	CONTRACTOR'S LICENSE #/SPECIALTY LICENSE # WORKERS COMPENSATION POLICY #

PAYROLL NO.	FOR WEEK ENDING	PROJECT NAME AND LOCATION	CONTRACT NO.

(1) NAME, ADDRESS, AND SOCIAL SECURITY NUMBER OF EMPLOYEE	(2) No. of W/H Exmptn	(3) Work Classification	OT or ST	(4) Day and Date / Hours Worked Daily							(5) Hour Total	(6) Pay Rate	(7) Gross Amount Earned: This Project	All Projects	Federal Tax	FICA	State Tax	SDI	VAC	Other	Total Deduction	(9) Net Wages Paid for Week	Check No.
			OT																				
			ST																				
			OT																				
			ST																				
			OT																				
			ST																				
			OT																				
			ST																				
			OT																				
			ST																				
			OT																				
			ST																				
			OT																				
			ST																				

STATEMENT OF NON-PERFORMANCE

Payroll Number: _____

I, _____, _____ do hereby state that
(Name of Signatory party) (Title)

NO PERSONS employed by _____ performed work on
(Name of submitting company)

the construction project known as _____

for the payroll period commencing on the _____ day of _____, 200__
(1st date of week) (month)

and ending on the _____ day of _____, 200__.
(last date of week) (month)

_____
Signature of Authorized Person

_____
Date

*THIS STATEMENT IS NOT REQUIRED TO BE SUBMITTED UNTIL AFTER SUBMISSION OF THE INITIAL PAYROLL REPORT

FRINGE BENEFIT STATEMENT

Contract No.:	Project Name:	Date:

INSTRUCTIONS: This form is to be submitted with the first certified payroll. In order that the Fringe Benefit rates can be used for checking payrolls or applied to Force Account work which may be done on the above contract the hourly rates for fringe bene

Classification:	Effective Date:	Subsistence or Travel Pay:
Health and Welfare $	Trust Fund Paid To: (Name) Address:	
Pension $	Trust Fund Paid To: (Name) Address:	
Vacation/Holiday $	Trust Fund Paid To: (Name) Address:	
Training and/or Other $	Trust Fund Paid To: (Name) Address:	
Classification:	Effective Date:	Subsistence or Travel Pay:
Health and Welfare $	Trust Fund Paid To: (Name) Address:	
Pension $	Trust Fund Paid To: (Name) Address:	
Vacation/Holiday $	Trust Fund Paid To: (Name) Address:	
Training and/or Other $	Trust Fund Paid To: (Name) Address:	
Classification:	Effective Date:	Subsistence or Travel Pay:
Health and Welfare $	Trust Fund Paid To: (Name) Address:	
Pension $	Trust Fund Paid To: (Name) Address:	
Vacation/Holiday $	Trust Fund Paid To: (Name) Address:	
Training and/or Other $	Trust Fund Paid To: (Name) Address:	

Supplemental statement must be submitted during the progress of work should a change in rate of any of the classifications be made. I CERTIFY THAT THE FRINGE BENEFIT PAYMENTS ARE MADE TO THE APPROVED PLANS, FUNDS OR PROGRAMS AS LISTED ABOVE.

Submitted (Contractor/Subcontractor)	By (Name and Title)	Signature

EMPLOYER'S MONTHLY REPORT TO TRUSTEES

1 THIS REPORT IS TO COVER HOURS FOR THE MONTH OF:

ACCOUNT NO.

LICENSE NO.

EMPLOYER NAME AND ADDRESS

If the above information is incorrect, please indicate changes which should be made.

I do hereby certify under penalty of perjury that the employees listed below constitute all the employees that I am required to make payments to the Trust. Furthermore, I certify that the hours shown for each employee are the total hours which he/she worked or was paid.

Signed by: _____

Title: _____

2 COMPUTATION OF CONTRIBUTIONS

6 TOTAL HOURS ON ALL PAGES	A. VACATION/DUES	B. PENSION	C. TRAINING AND RETRAINING	D. HEALTH AND WELFARE	E. INDUSTRY
	_____PER HOUR $	_____PER HOUR $	_____PER HOUR $	_____PER HOUR $	_____PER HOUR $
LIQUIDATED DAMAGES					
TOTAL DUE EACH TRUST	$	$	$	$	$

MAKE ONE CHECK FOR TOTAL AMOUNTS OF COLUMNS A, B, C, D & E

3 EMPLOYEE'S NAME	INITIALS 1ST 2ND	4 SOCIAL SECURITY NO.	5 HOURS

IMPORTANT: SOCIAL SECURITY NUMBER MUST BE FILLED TO ASSURE PROPER CREDIT.

TOTAL HOURS THIS PAGE

7 IMPORTANT THIS REPORT MUST BE FILED EVEN THOUGH NO EMPLOYEES WORKED THIS MONTH.

☐ NO EMPLOYEES WORKED THIS MONTH. PLEASE CONTINUE MAILING REPORT FORMS.

☐ TRANSFER TO INACTIVE STATUS. WE HAD NO EMPLOYEE TO REPORT THIS MONTH AND DO NOT ANTICIPATE HIRING ANY IN THE NEAR FUTURE.

IMPORTANT

REPORTS ARE DUE THE 15TH OF THE FOLLOWING MONTH AND MUST BE RECEIVED AT THE BANK BY THE 20TH TO AVOID LIGUIDATED DAMAGES (EVEN IF THERE WERE NO EMPLOYEES) AND INTEREST. LIQUIDATED DAMAGES ARE CALCULATED AT 20% OF THE TRUST OR $25 PER TRUST, WHICHEVER IS GREATER. INTEREST IS DUE AT THE MAXIMUM RATES PERMITTED BY LAW AND SPECIFIED IN THE TRUST AGREEMENT OF EACH TRUST. THESE RATES VARY AND MAY APPROACH OR EXCEED 20% PER ANNUM.

MONTHLY EMPLOYMENT UTILIZATION REPORT

U.S. DEPARTMENT OF LABOR EMPLOYMENT STANDARDS ADMINISTRATION TSG/ACTA008

This report is required by Executive Order 11246, Sec. 203. Faliure to report can result in contracts being canceled, terminated or suspended in whole or in part and the contractor may be declared ineligible for further government contracts for federally	1. Covered Area (SMSA OR EA) **LOS ANGELES COUNTY**	3. Current Goals Minority:	4. Reporting Period
	2. Employer I. D. No.	Female:	From:_____ To:_____

Project Name and Address	Contract Number(s)	Name and Address of Reporting Contractor	Federal Funding Agency

5. Construction Trade	Classification	6. TOTAL ALL HOURS OF EMPLOYMENT (Federal and Non-Federal)										7. Minority Percentage	8. Female Percentage	9. Total Number of Employees		10. Total Number of Minority Employees	
		6a. Total Hours of All Employees by Trade		6b. Black (not of Hispanic Origin)		6c. Hispanic		6d. Asian or Pacific Islander		6e. American Indian or Alaskan Native							
		M	F	M	F	M	F	M	F	M	F			M	F	M	F
	Journeyworkers																
	Apprentices																
	Trainees																
	Subtotal																
	Journeyworkers																
	Apprentices																
	Trainees																
	Subtotal																
	Journeyworkers																
	Apprentices																
	Trainees																
	Subtotal																
	Journeyworkers																
	Apprentices																
	Trainees																
	Subtotal																
Total Journeyworkers (All Trades)																	
Total Apprentices (All Trades)																	
Total Trainees (All Trades)																	
Grand Total (All Trades/All Classifications)																	

11. COMPANY OFFICIAL'S SIGNATURE AND TITLE	12. TELEPHONE ( )	13. DATE SIGNED	PAGE _____ OF _____

PUBLIC WORKS AFFIDAVIT

California Labor Code §1775(b)(4)

The undersigned Contractor/Subcontractor has complied with the provisions of the California Labor Code §1771, §1773.1, §1775, §1776, §1777.5, §1813 and §1815, and has paid all employees the specified general prevailing rate of per diem wages to its employees, and any amounts due pursuant to §1813, on the public project:

Awarding Body/District: _____

Project: _____

I declare under penalty of perjury under the laws of the State of California that the foregoing is true and correct.

Executed this _____ day of _____, 20_____ at _____, California.

_____
(Company Name)

_____
(Name)

_____
(Title)

_____
(Signature)

_____
(Approved by LCO/Program Manager)

[No final payment or retention shall be paid to the contractor until it certifies that all benefit payments owed by the contractor are made or otherwise guaranteed.]

SITE VISITATION EMPLOYEE INTERVIEW FORM

SAMPLE SITE VISITATION LOG

SITE	VISIT DATE	PRIME CONTRACTOR	SUB CONTRACTOR	EMPLOYEE NAME	SOCIAL SECURITY #	POSITION TITLE	TASK PERFORMED AT INTERVIEW	PAY RATE	COMPLIANT/ NON-COMPLIANT	CROSS-CHECK WITH PAYROLL DOCS / COMMENTS
Hoover	9/1/99	Baker	Mills Plumbing	John Doe	111-11-1111	Plumber	Repairing Plumbing	$34.19	Compliant	Certified Payroll Records check out
Hoover	9/1/00	Baker	Mills Plumbing	Mark Baker	222-22-2222	Laborer	Painting	$10.40	Non-Compliant	Certified Payroll does not check out with interview

SITE VISITATION EMPLOYEE INTERVIEW TRACKING LOG

APPENDIX 3-C

Design Plans

Devil's Gate and Eaton Stormwater Flood Management Project

Appendix 3-C includes:

- ✓ Phase I, Eaton Wash Spreading Grounds Improvements- Final Design Plans
- ✓ Phase II, Eaton Wash Dam Rehabilitation Project- Final Design Plans
- ✓ Phase III, Eaton Wash Spreading Grounds Intake Improvement and Basin Enlargement- Final Design Plans
- ✓ Phase IV, Devil's Gate Water Conservation-30% Design Plans

COUNTY OF LOS ANGELES
DEPARTMENT OF PUBLIC WORKS
EATON WASH

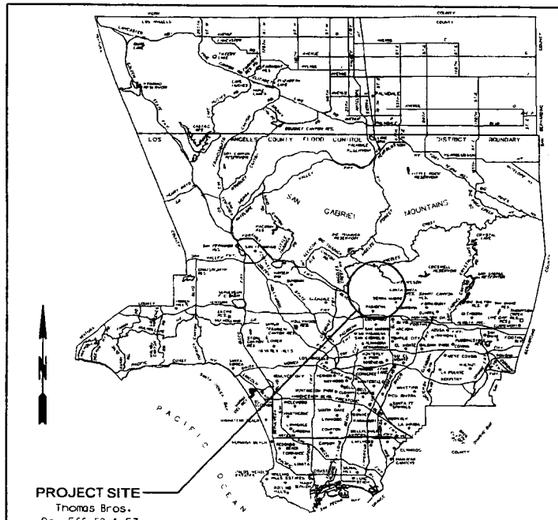

LOCATION MAP

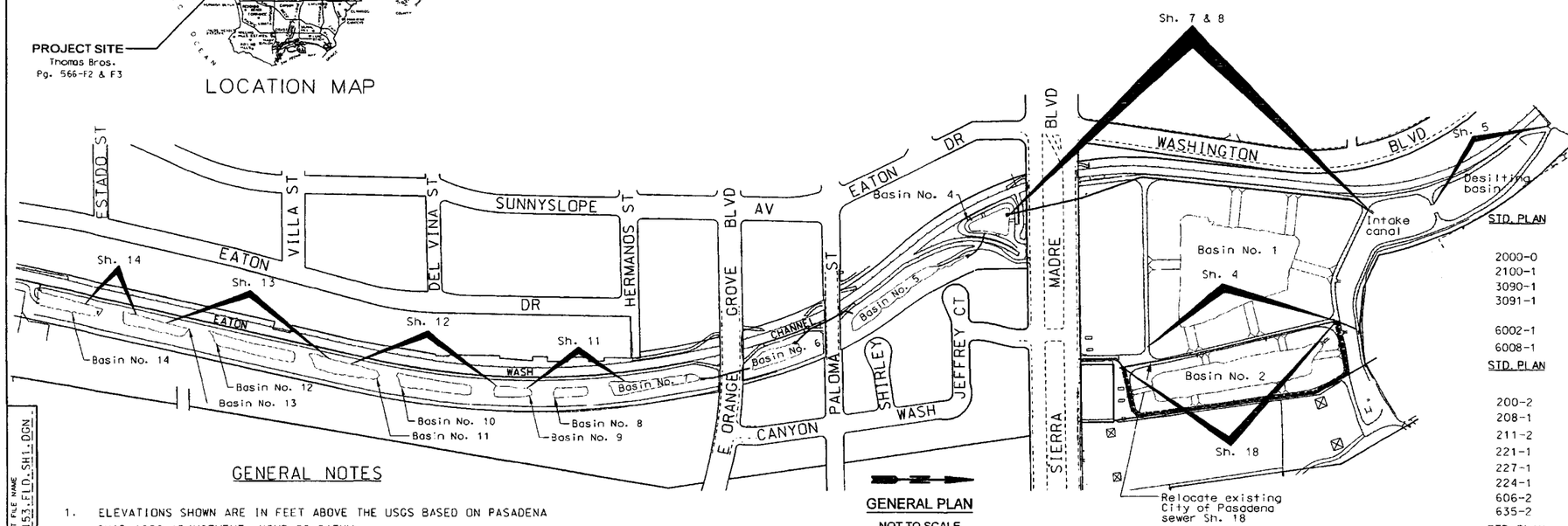

GENERAL PLAN
NOT TO SCALE

INDEX TO PROJECT PLANS

SH. NO.	DESCRIPTION
1	TITLE SHEET
2	SITE PLAN 1
3	SITE PLAN 2
4	BASIN 1 AND BASIN 2 GRADING PLAN
5	LINING OF DESILTING BASIN AND INVERT ACCESS RAMP
6	DESILTING BASIN STRUCTURAL DETAILS
7	PLAN AND PROFILE - CIPP LINING STA 0+00 TO STA 7+59
8	PLAN AND PROFILE - CIPP LINING STA 7+59 TO STA 12+59
9	PLAN AND PROFILE - RCP AND CMP LINING BASINS 4.5.6.7. AND 14
10	PLAN AND PROFILE - OUTLET STRUCTURES BASINS 4. 6. & 7
11	BASIN 7.BASIN 8. AND BASIN 9 GRADING PLAN
12	BASIN 9.BASIN 10. AND BASIN 11 GRADING PLAN
13	BASIN 11.BASIN 12 AND BASIN 13 GRADING PLAN
14	BASIN 13 AND BASIN 14 GRADING PLAN
15	DETAIL AND SECTIONS - OUTLET STRUCTURES BASINS 4. 6. & 7
16	INTER-BASIN STRUCTURE DETAILS AND SECTIONS
17	CONTROL STRUCTURE-STRUCTURAL DETAILS
18	10" DIP SEWER RELOCATION PLAN AND PROFILE
19	LOG OF BORINGS

INDEX TO STANDARD PLANS

STD. PLAN	LACDPW TITLE
2000-0	LEGEND FOR SANITARY SEWER PLANS
2100-1	REQUIREMENTS FOR SEWER IN THE VICINITY OF WATER MAIN
3090-1	CRITERIA FOR THE DESIGN OF SHORING FOR EXCAVATIONS
3091-1	SAMPLE SHEET FOR USE AS A GUIDE IN PREPARING CALCULATIONS FOR SHORING OF EXCAVATIONS
6002-1	PORTABLE SECURITY FENCE FOR OPEN TRENCHES
6008-1	MINIMUM PUBLIC SAFETY REQUIREMENT FOR OPEN EXCAVATIONS

STD. PLAN	SPPWC TITLE
200-2	PRECAST CONCRETE SEWER MANHOLE
208-1	BREAKING INTO EXISTING MANHOLES
211-2	MANHOLE FRAME AND COVER PRESSURE TYPE
221-1	BEDDING FOR SEWER PIPE
227-1	ALLOWABLE TRENCH WIDTHS
224-1	SUPPORT FOR CONDUITS ACROSS TRENCHES
606-2	METAL HAND RAILINGS
635-2	STEEL STEPS

STD. PLAN	CITY OF PASADENA TITLE
S-407	TRENCH BACKFILL

GENERAL NOTES

1. ELEVATIONS SHOWN ARE IN FEET ABOVE THE USGS BASED ON PASADENA QUAD 1990 ADJUSTMENT. NGVD 29 DATUM.
2. EXISTING TREES SHALL BE REMOVED ONLY IF SO DESIGNATED. THOSE TREES NOT DESIGNATED AS INTERFERING WITH CONSTRUCTION SHALL BE PROTECTED IN PLACE.
3. ALL FIELD BOOK REFERENCES ARE TO LOS ANGELES COUNTY DEPARTMENT OF PUBLIC WORKS FIELD BOOKS. UNLESS OTHERWISE NOTED.
4. ALL EXISTING UTILITIES SHOWN ON THE PLANS ARE THE PROPERTY OF THE AGENCIES LISTED ON SHEET 1.
5. EXISTING UTILITIES SHALL BE MAINTAINED IN PLACE BY THE CONTRACTOR. UNLESS OTHERWISE NOTED. AND ALL UTILITIES SHALL BE TEMPORARILY SUPPORTED TO THE SATISFACTION OF THE OWNER.
6. STATIONS SHOWN ON THE PLANS ARE ALONG CENTER LINE OF CONDUIT OR ON A LINE NORMAL TO CENTER LINE OF CONDUIT.
7. STATIONS AND INVERT ELEVATIONS OF PIPE INLETS SHOWN ON THE PROFILES ARE AT THE INSIDE FACE OF THE CONDUIT. UNLESS OTHERWISE SHOWN.
8. THE WORK SHOWN ON THESE PLANS REQUIRES THE PRIME CONTRACTOR TO HAVE A VALID CLASS A . . . . LICENSE ISSUED BY THE STATE OF CALIFORNIA.
9. FOR STRUCTURAL NOTES AND STRUCTURAL CRITERIA. SEE SHEET 15.

ABBREVIATIONS

ABBREVIATION	WORD OR WORDS	ABBREVIATION	WORD OR WORDS	ABBREVIATION	WORD OR WORDS
AC	ASPHALT CONCRETE	FL	FLOW LINE	S	SLOPE
BM	BENCH MARK	GC	GRADE CHANGE	SD	STORM DRAIN
CL	CENTER LINE	INT	INTERSECTION	SF	SQUARE FOOT
CLF	CHAIN LINK FENCE	HORIZ	HORIZONTAL	SPEC	SPECIFICATIONS
CMP	CORRUGATED METAL PIPE	INV	INVERT	SWR	SANITARY SEWER
CONST	CONSTRUCT. CONSTRUCTION	L	LENGTH	ST	STREET
CY	CUBIC YARD	LACDPW	LOS ANGELES COUNTY DEPARTMENT OF PUBLIC WORKS	STA	STATION
DIA	DIAMETER			STD	STANDARD
DWG	DRAWING	MH	MANHOLE	TYP	TYPICAL
EC	END OF CURVE	PT	POINT	U/S	UPSTREAM
EL	ELEVATION	R/W	RIGHT OF WAY	VERT	VERTICAL
EXST	EXISTING	RC	REINFORCED CONCRETE	W	WIDTH

UTILITIES

SEWER.....CITY OF PASADENA
WATER.....CITY OF PASADENA
POWER.....SOUTHERN CALIFORNIA EDISON

REFERENCES

SURVEY..... FC 3454 PGS. 53 to 55
SEWER..... CITY OF PASADENA DWG. NO. 3480 SHTS. 1 to 6

TWO DAYS BEFORE YOU DIG
CALL USA TOLL FREE
1-800-227-2600

APPROVED: GAIL FARBER DIRECTOR OF PUBLIC WORKS
BY Patrick McCaddin 1-29-2010
DEPUTY DIRECTOR DATE

RECOMMENDED
BY
ASSISTANT DEPUTY DIRECTOR DATE

SUBMITTED
BY 1/28/2010
DATE

DATE	MK	DESCRIPTION

REVISIONS

REGISTERED PROFESSIONAL ENGINEER
ABED MOHSEN
NO. C59117
EXP. 06/30/11
CIVIL
STATE OF CALIFORNIA

Abed Mohsen 1/28/10
PROJECT ENGINEER DATE

COUNTY OF LOS ANGELES DEPARTMENT OF PUBLIC WORKS

EATON WASH
SPREADING GROUNDS IMPROVEMENTS

TITLE SHEET

PIN FCC0001153 | JOB X5009690 | DWG 24-077.1 | SHEET 1 OF 19

DRAFTER P. ROMERO | DESIGNER P. ROMERO | CHECKER A. MOHSEN | CADD PROJECT FILE NAME FCC0001153.FLD.SH1.DGN

DATE: 10/28/10 TIME: 11:54 AM FILE: MOHSEN

EATON WASH.dgn 01/28/2010 11:54:45 AM

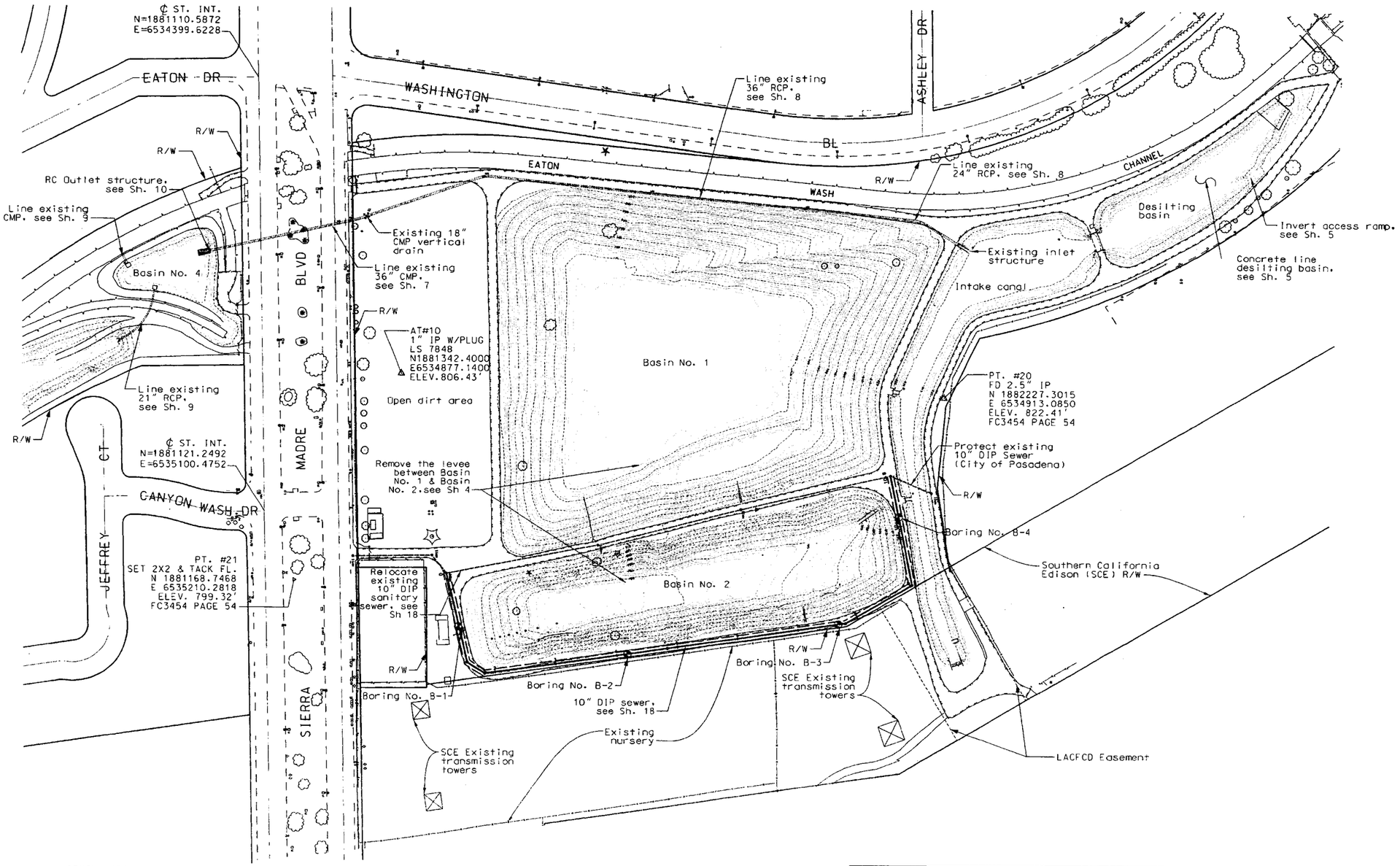

BENCH MARK

BM NO. AT-9
FD. GEAR SPK & W
STAMPED HF1 CP 309 FL
N 1.881.208.6091
E 6.535.759.5922
ELEV. 805.00'

SITE PLAN 1
NOT TO SCALE

DATE	MK	DESCRIPTION

REVISIONS

REGISTERED PROFESSIONAL ENGINEER
ABED MOHSEN
NO. C 59117
EXP. 6/30/11
CIVIL
STATE OF CALIFORNIA

PROJECT ENGINEER 2/2/10 DATE

COUNTY OF LOS ANGELES DEPARTMENT OF PUBLIC WORKS

EATON WASH
SPREADING GROUNDS IMPROVEMENTS

SITE PLAN 1

PIN FCC0001153	JOB X5009690	DWG 24-D77.2	SHEET 2 OF 19

DRAFTER P. ROMERO | DESIGNER P. ROMERO | CHECKER A. MOHSEN | CADD PROJECT FILE NAME FCC0001153.FLD.SH2.DGN | REVIEWED BY | DATE 2/2/10

EATON WASH.dgn 01/28/2010 3:43:32 PM

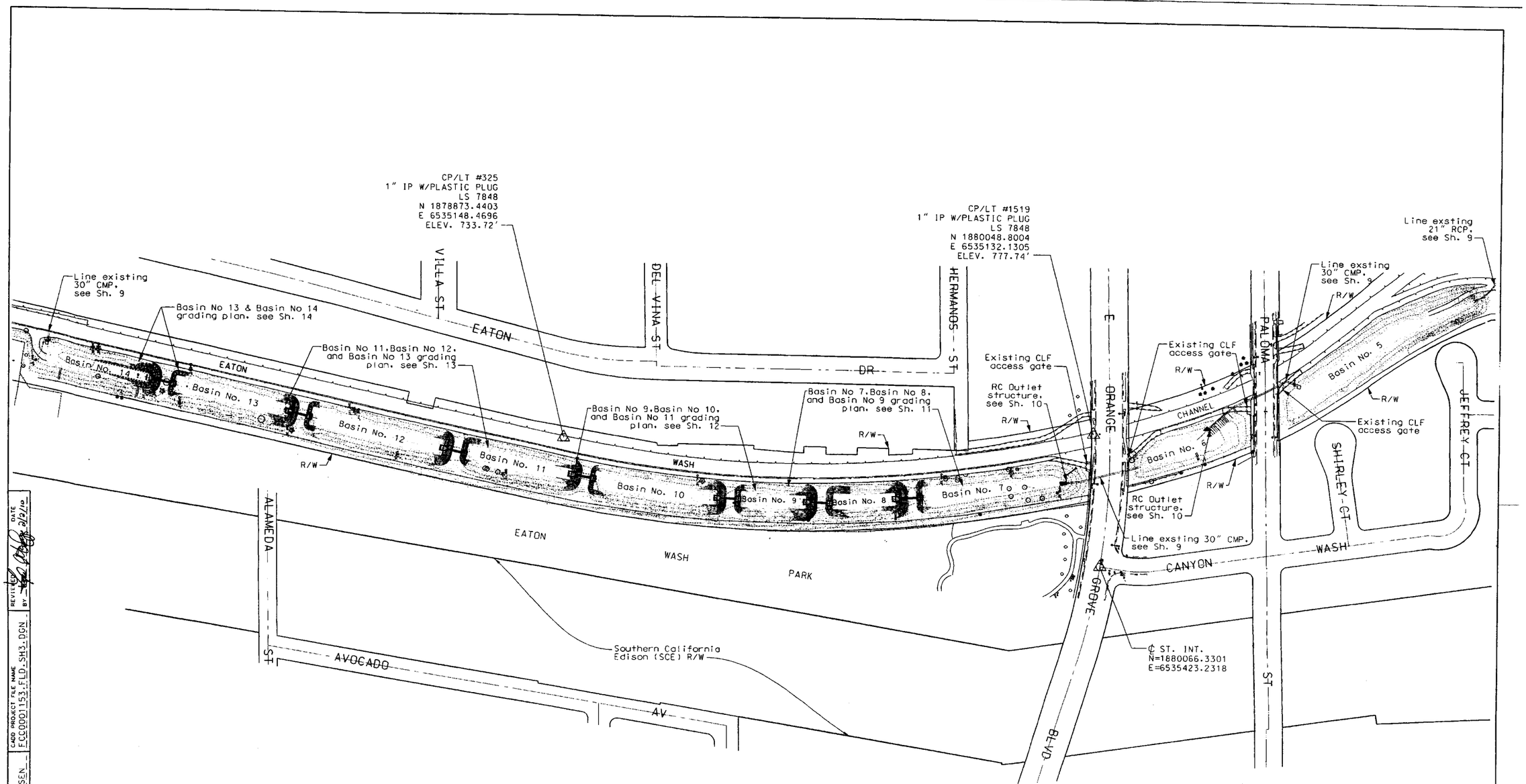

DATE	MK	DESCRIPTION

REVISIONS

REGISTERED PROFESSIONAL ENGINEER
ABED MOHSEN
NO. C 59117
EXP. 6/30/11
CIVIL
STATE OF CALIFORNIA

PROJECT ENGINEER 2/2/10 DATE

COUNTY OF LOS ANGELES DEPARTMENT OF PUBLIC WORKS

EATON WASH
SPREADING GROUNDS IMPROVEMENTS

SITE PLAN 2

PIN FCC0001153	JOB X5009690	DWG 24-D77.3	SHEET 3 OF 19

DRAFTER P. ROMERO | DESIGNER P. ROMERO | CHECKER A. MOHSEN | CADD PROJECT FILE NAME FCC0001153.FLD.SH3.DGN | REVIEWED BY | DATE 2/2/10

EATON WASH.dgn 01/28/2010 3:23:39 PM

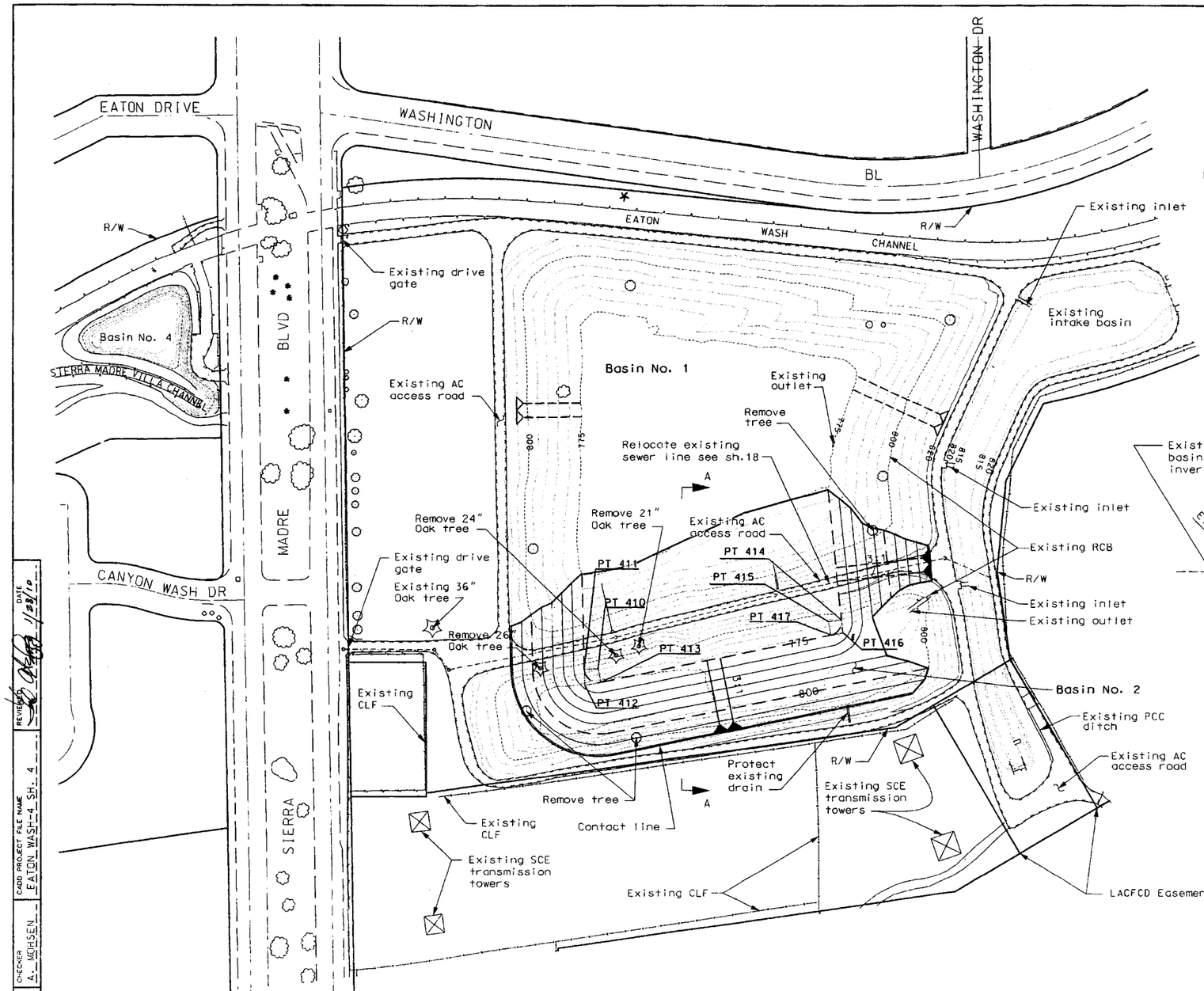

PLAN
SCALE: 1" = 80'

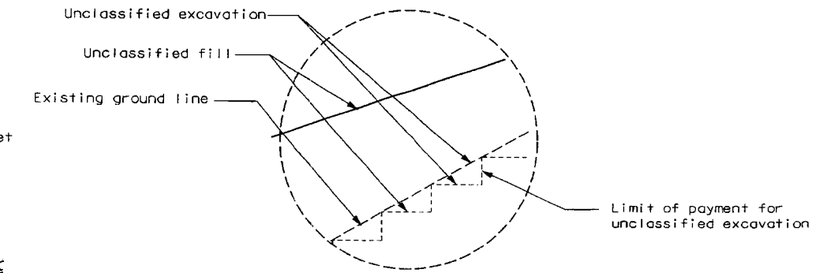

BENCHING DETAIL
NO TO SCALE

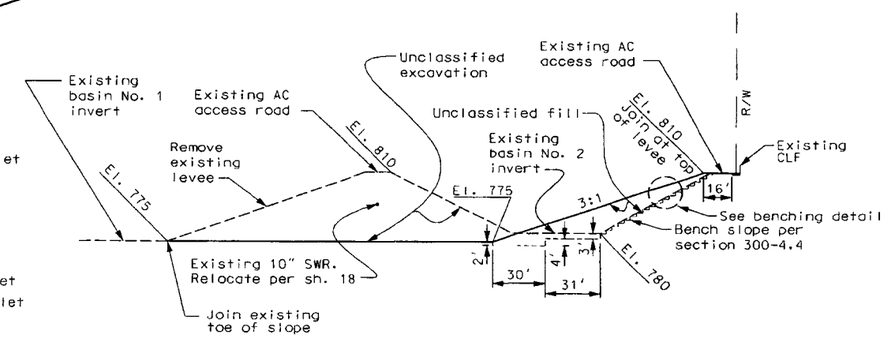

SECTION A-A
SCALE: 1" = 40'

Grading control points			
Point No.	Northing	Easting	Elevation
410	1881636.1509	6535199.1233	
411	1881616.1573	6535199.6298	775.0
PI 412	1881616.7607	6535223.4575	
413	1881640.1214	6535218.7256	775.0
414	1881991.8483	6535128.9454	775.0
415	1881971.9406	6535130.9821	
PI 416	1881993.8111	6535147.0827	
417	1881975.9353	6535150.7036	775.0

DATE	MK	DESCRIPTION

REVISIONS

REGISTERED PROFESSIONAL ENGINEER
ABED MOHSEN
NO. C 59117
EXP. 6/30/11
CIVIL
STATE OF CALIFORNIA

PROJECT ENGINEER 1/28/10 DATE

COUNTY OF LOS ANGELES DEPARTMENT OF PUBLIC WORKS

EATON WASH

SPREADING GROUNDS IMPROVEMENTS

BASIN 1 AND BASIN 2 GRADING PLAN

PIN FCC0001153 | JOB X5009690 | DWG 24-D77.4 | SHEET 4 OF 19

DRAFTER G. ARANKI | DESIGNER G. ARANKI | CHECKER A. MOHSEN | CADD PROJECT FILE NAME EATON_WASH-4_SH. 4 | REVISED 1/28/10

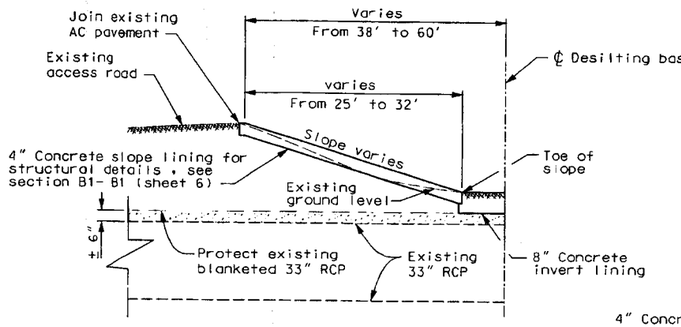

SECTION B-B
NOT TO SCALE

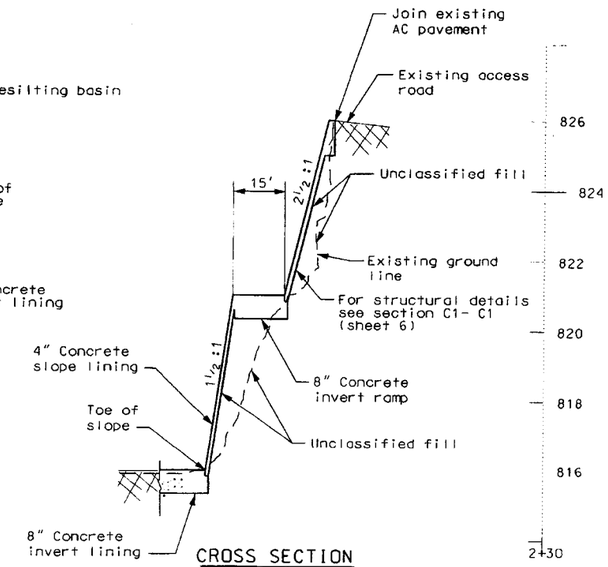

CROSS SECTION
STA 1+30
SCALES: HOR. 1" = 20'
VERT. 1" = 2'

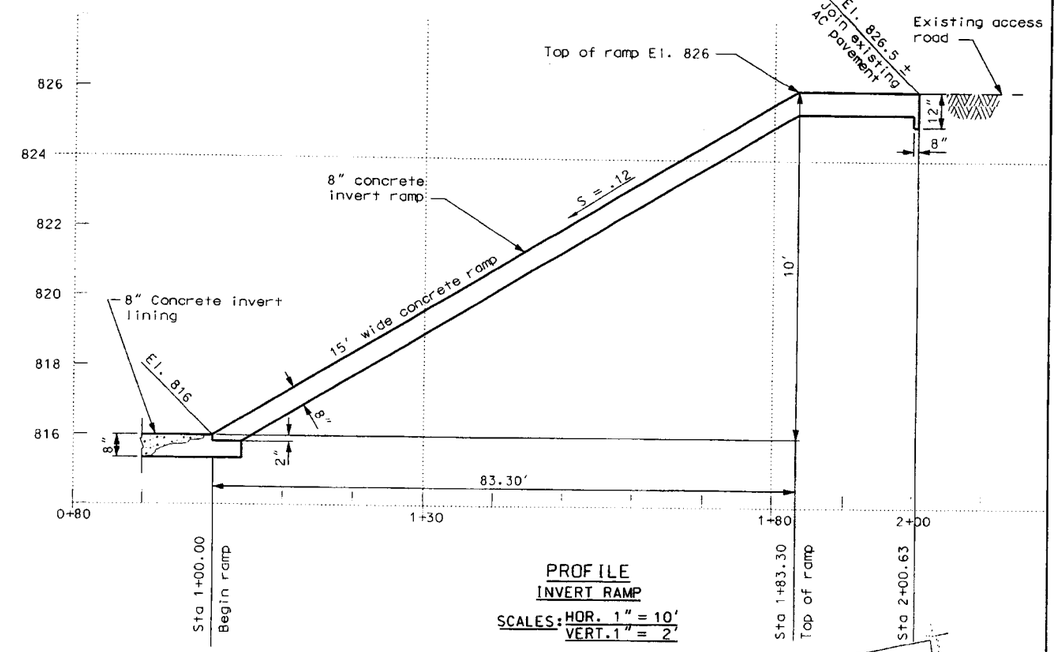

PROFILE
INVERT RAMP
SCALES: HOR. 1" = 10'
VERT. 1" = 2'

BENCH MARK: El. 861.05
AT-5
GEAR SPIKE AND WASHER LS 4457
N 1883094.9039
E 6533810.4934

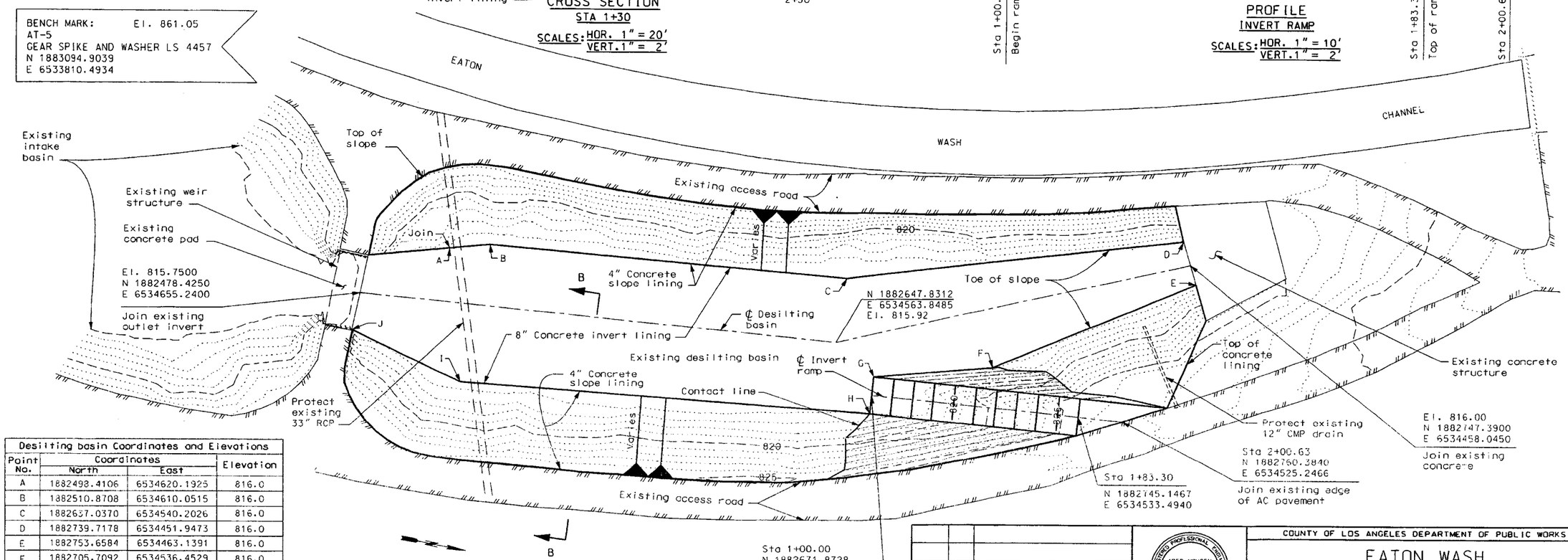

PLAN
SCALE: 1" = 20'

Desilting basin Coordinates and Elevations

Point No.	Coordinates North	Coordinates East	Elevation
A	1882498.4106	6534620.1925	816.0
B	1882510.8708	6534610.0515	816.0
C	1882637.0370	6534540.2026	816.0
D	1882739.7178	6534451.9473	816.0
E	1882753.6584	6534463.1391	816.0
F	1882705.7092	6534536.4529	816.0
G	1882668.3192	6534566.5495	816.0
H	1882675.4528	6534579.7293	816.0
I	1882531.9986	6534661.9837	816.0
J	1882484.0400	6534669.4300	816.0

DATE	MK	DESCRIPTION

REVISIONS

REGISTERED PROFESSIONAL ENGINEER — ABED MOHSEN — NO. C 59117 — EXP. 6/30/11 — CIVIL — STATE OF CALIFORNIA

PROJECT ENGINEER 1/28/10 DATE

COUNTY OF LOS ANGELES DEPARTMENT OF PUBLIC WORKS

EATON WASH
SPREADING GROUNDS IMPROVEMENTS

LINING OF DESILTING BASIN AND INVERT ACCESS RAMP

PIN FCC0001153 | JOB X5009690 | DWG 24-D77.5 | SHEET 5 OF 19

DRAFTER G. ARANKI | DESIGNER G. ARANKI | CHECKER A. MOHSEN | CADD PROJECT FILE NAME EATON WASH-1 SH. 5 | REVIEWED BY | DATE 1/28/10

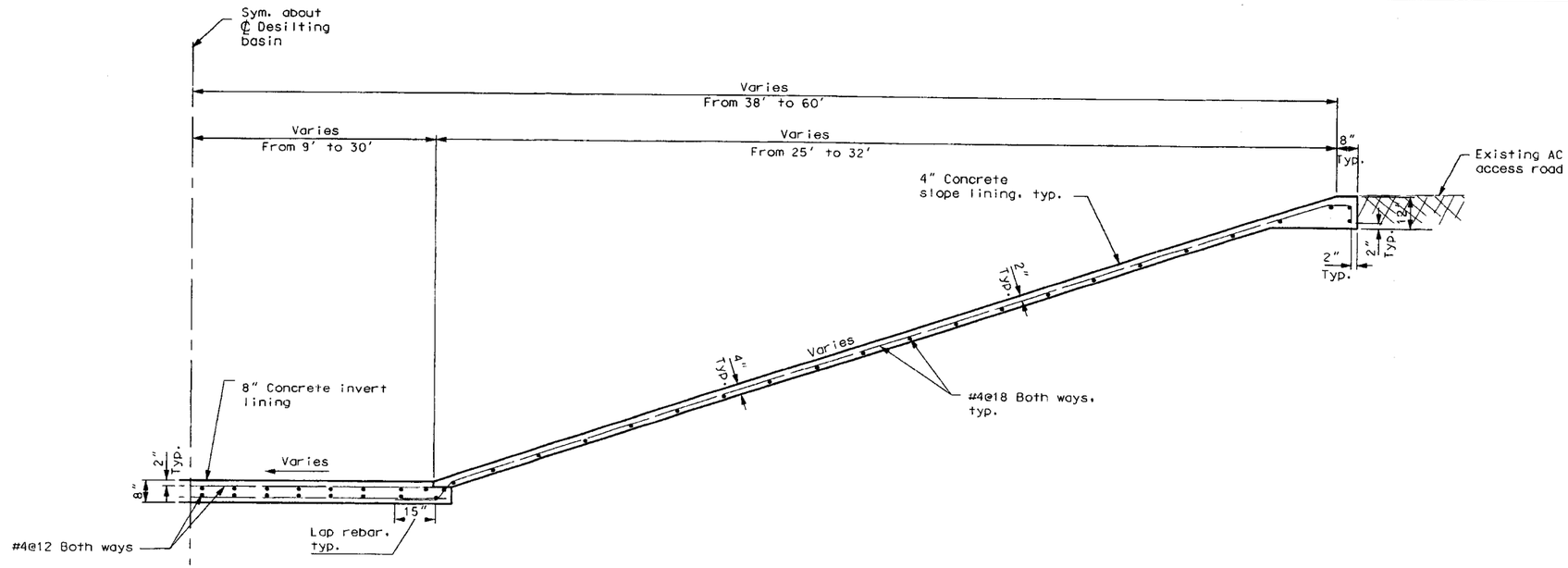

SECTION B1-B1(Sh. 5)
SCALE: 1/2" = 1'-0"

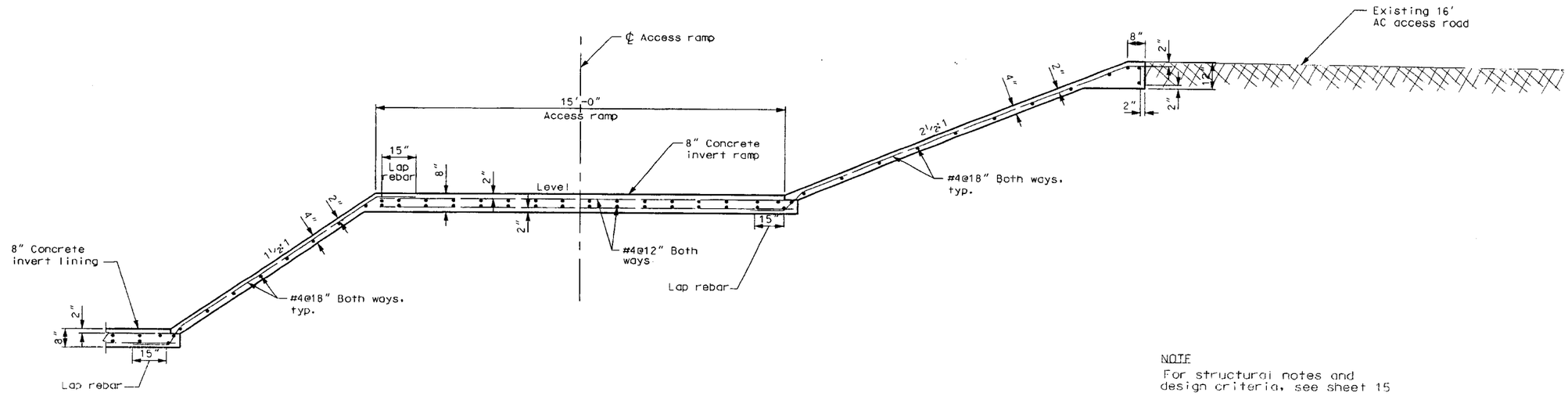

SECTION C1-C1(Sh. 5)
SCALE: 1/2" = 1'-0"

NOTE
For structural notes and
design criteria, see sheet 15

DATE	MK	DESCRIPTION

REVISIONS

REGISTERED PROFESSIONAL ENGINEER
ABED MOHSEN
NO. C 59117
EXP. 6/30/11
CIVIL
STATE OF CALIFORNIA

Abed Mohsen 2/2/10
PROJECT ENGINEER DATE

COUNTY OF LOS ANGELES DEPARTMENT OF PUBLIC WORKS

EATON WASH
SPREADING GROUNDS IMPROVEMENTS

DESILTING BASIN STRUCTURAL DETAILS

PIN FCC0001153	JOB X5009690	DWG 24-D77.6	SHEET 6 OF 19

DRAFTER G. ARANKI
DESIGNER G. ARANKI
CHECKER A. MOHSEN
CADD PROJECT FILE NAME EATON WASH-1 SH. 6
REVISED BY DATE 2-2-10

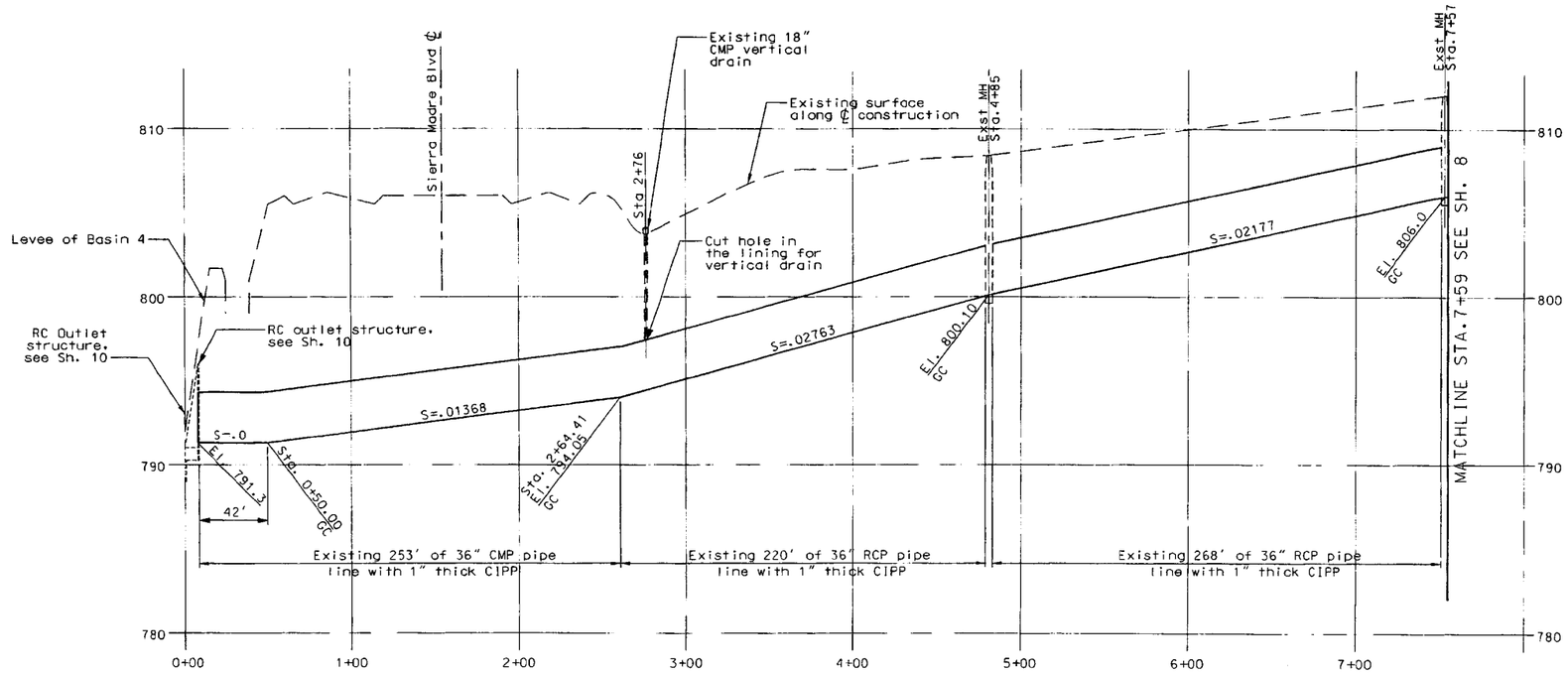

PROFILE

SCALE: HOR. 1"=40' VER. 1"=4'

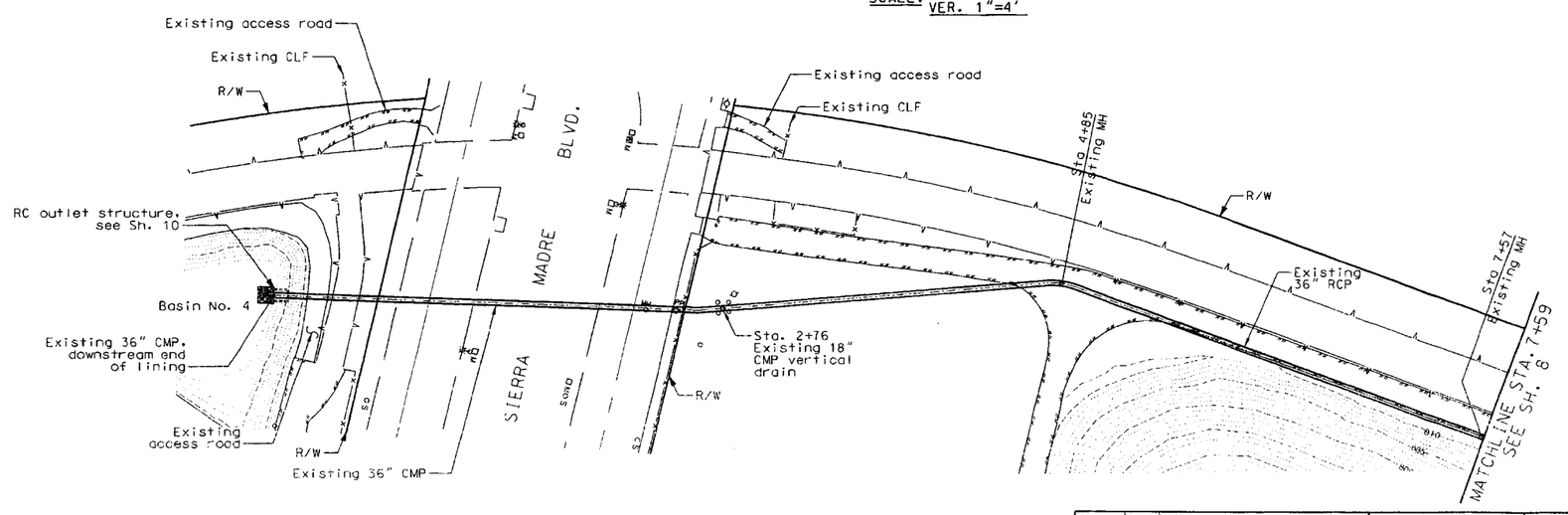

PLAN

SCALE: 1"=40'

Note:

1. The lining shall be performed after the construction of the RC outlet structures

DATE	MK	DESCRIPTION

REVISIONS

REGISTERED PROFESSIONAL ENGINEER ABED MOHSEN No. C59117 Exp. 06/30/11 CIVIL STATE OF CALIFORNIA

Abed Mohsen 2/2/10 PROJECT ENGINEER DATE

COUNTY OF LOS ANGELES DEPARTMENT OF PUBLIC WORKS

EATON WASH

SPREADING GROUNDS IMPROVEMENTS

PLAN AND PROFILE
CIPP LINING
STA 0+00 TO STA 7+59

P/N FCC0001153	JOB X5009690	DWG 24-077.7	SHEET 7 OF 19

DRAFTER P. ROMERO | DESIGNER P. ROMERO | CHECKER A. MOHSEN | CADD PROJECT FILE NAME FCC0001153.FLD.SH7.DGN | REVIEWED BY | DATE 2/2/10

EATON WASH dgn 01/28/2010 3:24:24 PM

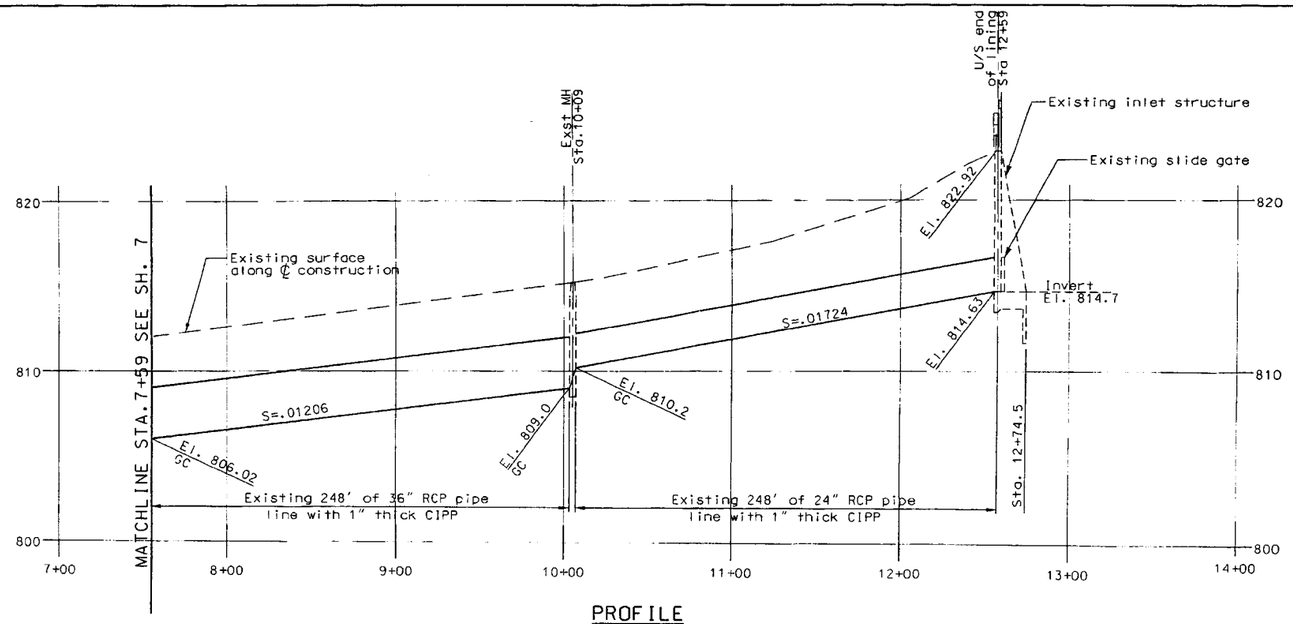

PROFILE

SCALE: HOR. 1"=40'
VER. 1"=4'

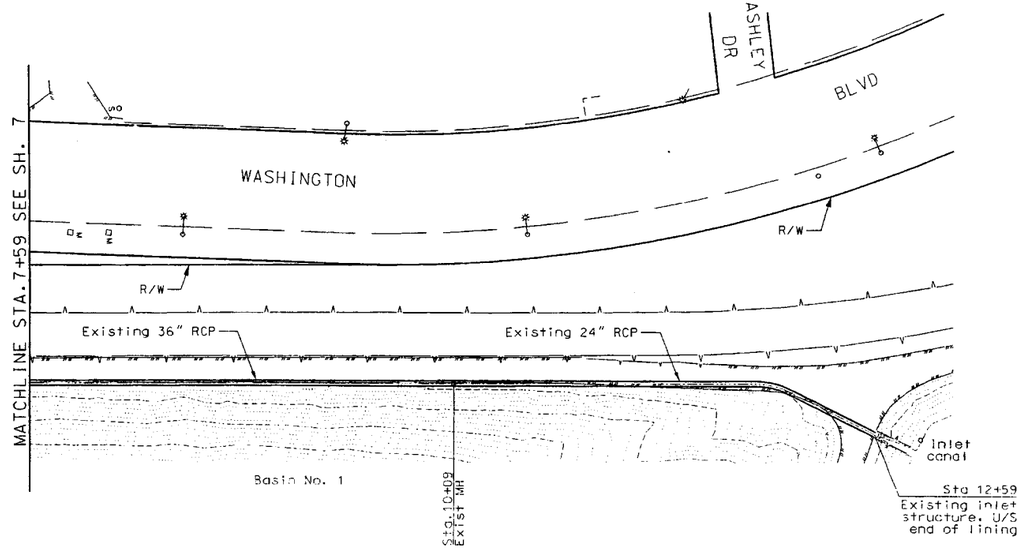

PLAN

SCALE: 1"=40'

DATE	MK	DESCRIPTION

REVISIONS

REGISTERED PROFESSIONAL ENGINEER — ABED MOHSEN — C59117 — EXP. 06/30/11 — CIVIL — STATE OF CALIFORNIA

Abed Mohsen 2/2/10
PROJECT ENGINEER DATE

COUNTY OF LOS ANGELES DEPARTMENT OF PUBLIC WORKS

EATON WASH
SPREADING GROUNDS IMPROVEMENTS

PLAN AND PROFILE
CIPP LINING
STA 7+59 TO STA 12+59

PIN FCC0001153	JOB X5009690	DWG 24-D77.8	SHEET 8 OF 19

DRAFTER P. ROMERO | DESIGNER P. ROMERO | CHECKER A. MOHSEN | CADD PROJECT FILE NAME FCC0001153.FLD.SH8.DGN | REVIEWED BY | DATE 2/2/10

DATE: 10ATCH FIMI: STINCS FI F: STEELS

EATON WASH.dgn 01/28/2010 3:37:32 PM

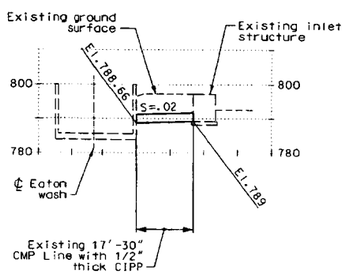

PROFILE
SCALE: 1"=20'

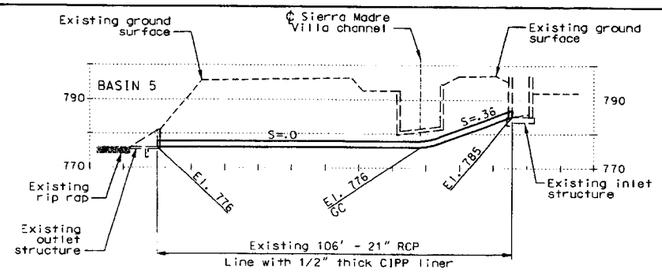

PROFILE
SCALE: 1"=20'

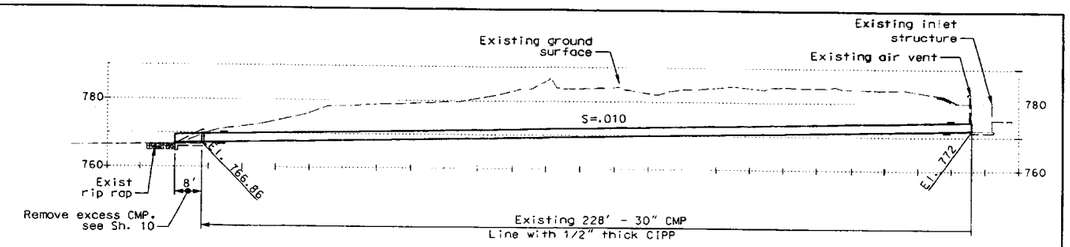

PROFILE
SCALE: 1"=20'

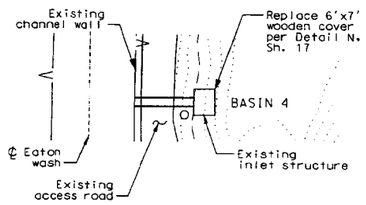

PLAN
SCALE: 1"=20'
BASIN 4 TO EATON WASH

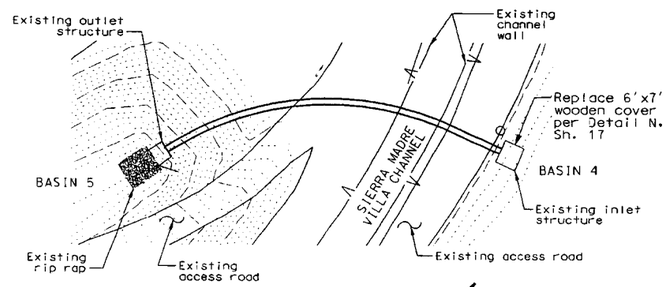

PLAN
SCALE: 1"=20'
BASIN 4 TO BASIN 5

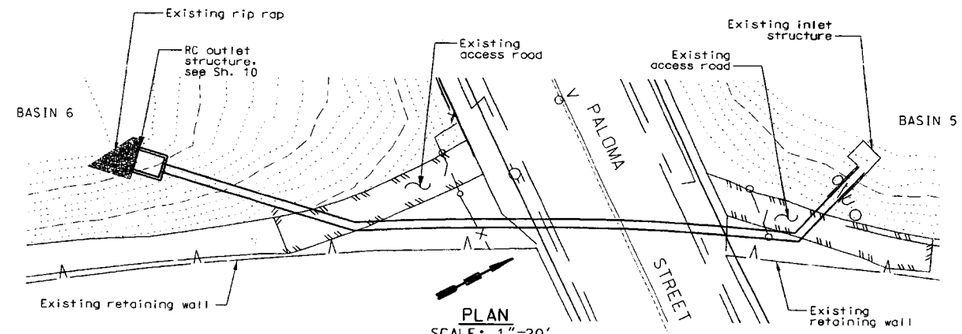

PLAN
SCALE: 1"=20'
BASIN 5 TO BASIN 6

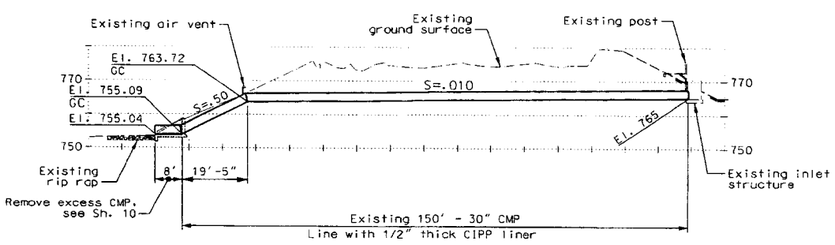

PROFILE
SCALE: 1"=20'

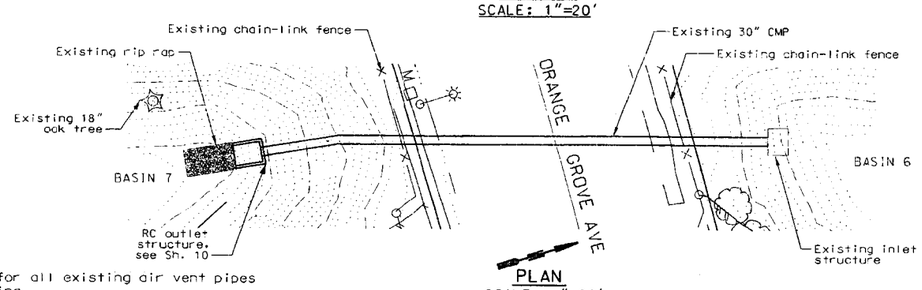

PLAN
SCALE: 1"=20'
BASIN 6 TO BASIN 7

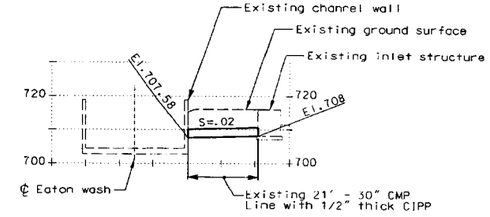

PROFILE
SCALE: 1"=20'

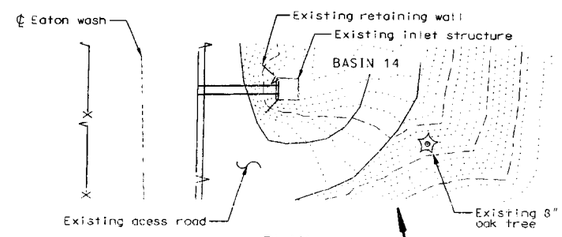

PLAN
SCALE: 1"=20'
BASIN 14 TO EATON WASH

Notes:

1. Cut hole for all existing air vent pipes after lining
2. The lining shall be performed after the construction of the RC outlet structures

DATE	MK	DESCRIPTION

REVISIONS

REGISTERED PROFESSIONAL ENGINEER ABED MOHSEN No. C 59117 Exp. 6/30/11 CIVIL STATE OF CALIFORNIA

PROJECT ENGINEER 2/2/10 DATE

COUNTY OF LOS ANGELES DEPARTMENT OF PUBLIC WORKS

EATON WASH
SPREADING GROUNDS IMPROVEMENTS

PLAN AND PROFILE
RCP AND CMP LINING
BASINS 4, 5, 6, 7, AND 14

PIN FCC0001153	JOB X5009690	DWG 24-D77.9	SHEET 9 OF 19

DRAFTER P. ROMERO | DESIGNER P. ROMERO | CHECKER A. MOHSEN | CADD PROJECT FILE NAME =CC0001153.FLD.SH9.DGN | REVIEWED BY | DATE 2/2/10

DATE: 5/24/94 TIME: 9:19:46 FILE: SH11.FLS

EATON WASH.dgn 01/28/2010 3:25:20 PM

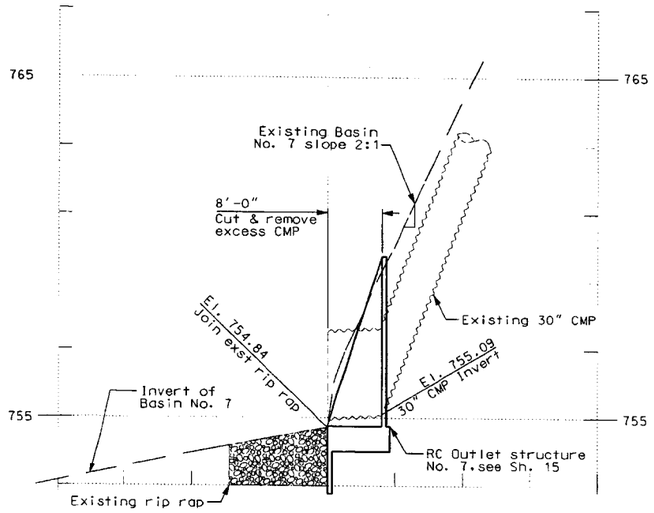

PROFILE
BASIN NO. 7 OUTLET STRUCTURE (SH. 9)
SCALES: HOR. 1" = 10'
VERT. 1" = 2'

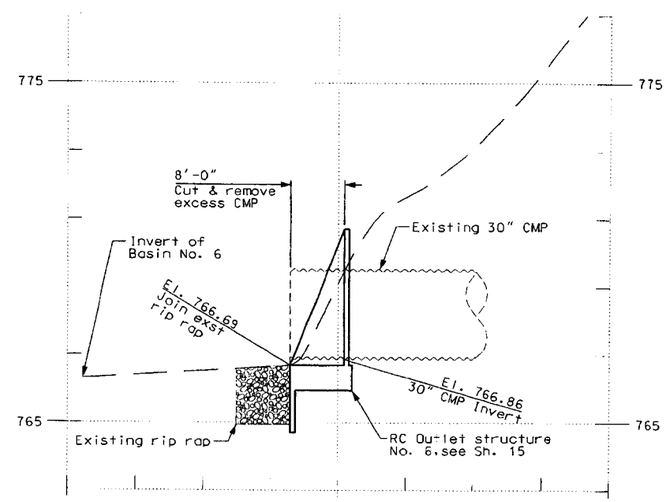

PROFILE
BASIN NO. 6 OUTLET STRUCTURE (SH. 9)
SCALES: HOR. 1" = 10'
VERT. 1" = 2'

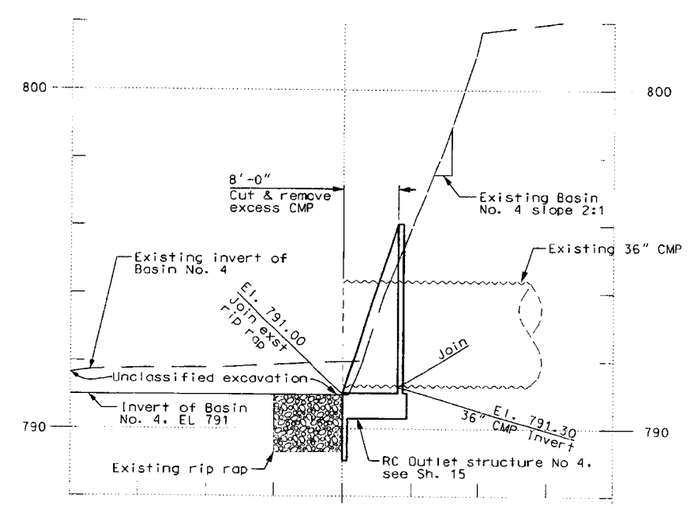

PROFILE
BASIN NO. 4 OUTLET STRUCTURE (SH. 7)
SCALES: HOR. 1" = 10'
VERT. 1" = 2'

BENCH MARK

BM NO. 60-1830
2" BRASS FC DISK
STAMPED. 1965
N 1880041.5100
E 6535093.9880
ELEV. 778.28'

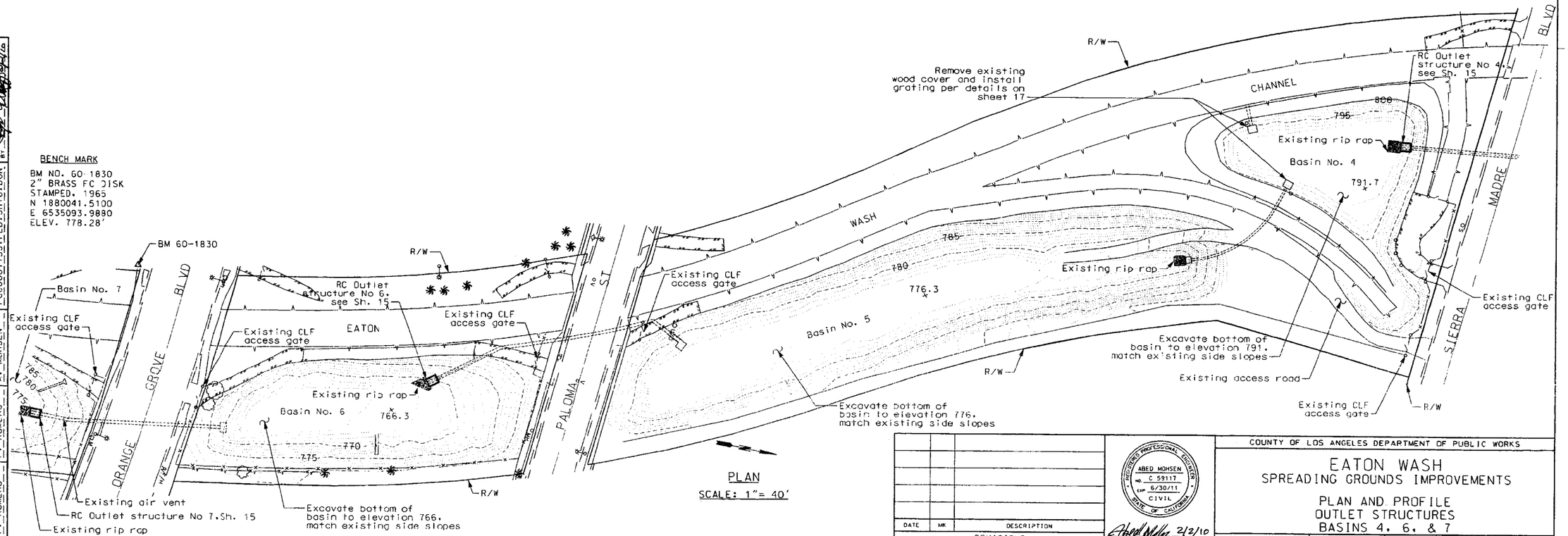

PLAN
SCALE: 1" = 40'

DATE	MK	DESCRIPTION

REVISIONS

REGISTERED PROFESSIONAL ENGINEER
ABED MOHSEN
NO. C 59117
EXP. 6/30/11
CIVIL
STATE OF CALIFORNIA

Abed Mohsen 2/2/10
PROJECT ENGINEER DATE

COUNTY OF LOS ANGELES DEPARTMENT OF PUBLIC WORKS

EATON WASH
SPREADING GROUNDS IMPROVEMENTS

PLAN AND PROFILE
OUTLET STRUCTURES
BASINS 4, 6, & 7

PIN FCC0001153	JOB X5009690	DWG 24-D77.10	SHEET 10 OF 19

DRAFTER P. ROMERO
DESIGNER P. ROMERO
CHECKER A. MOHSEN
CADD PROJECT FILE NAME FCC0001153-FLD-SH10.DGN
REVIEWED BY
DATE 2/2/10

EATON WASH.dgn 01/28/2010 1:25:38 PM

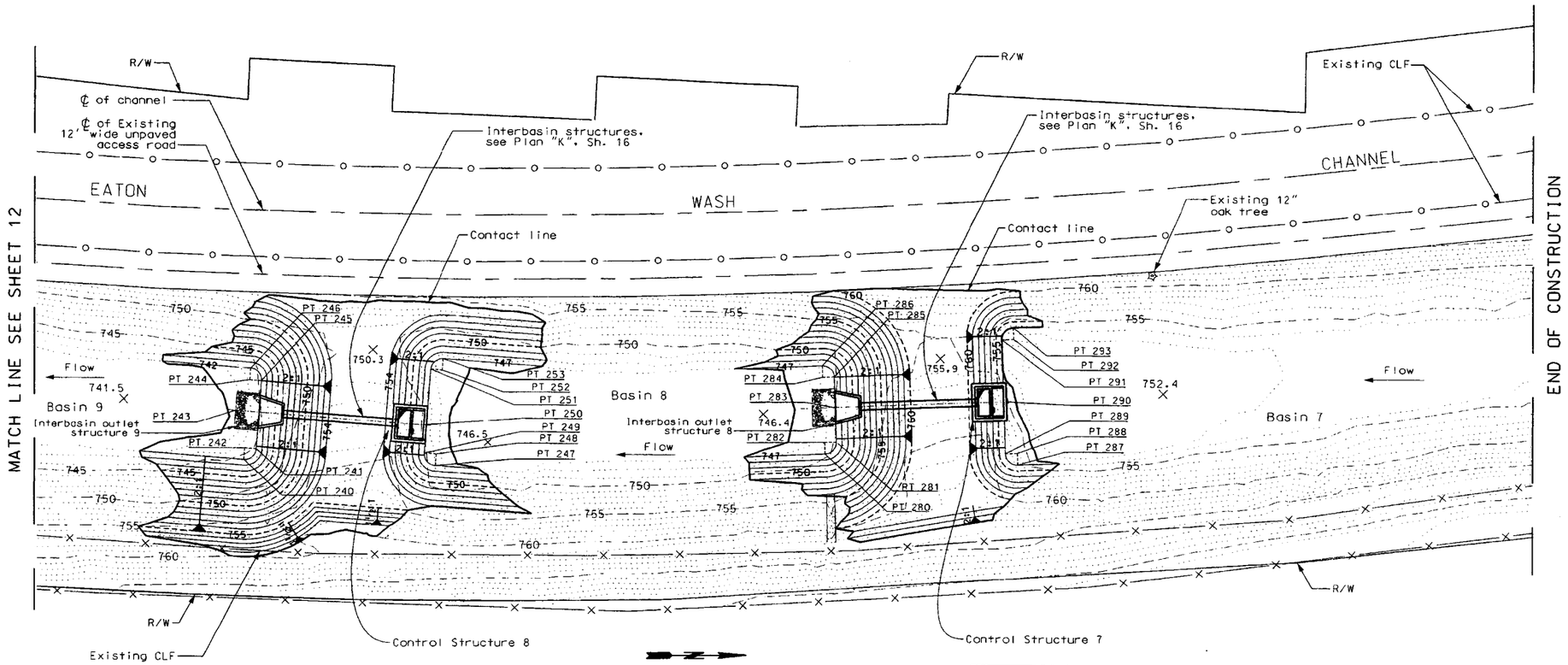

PLAN

SCALE: 1" = 20'

Grading and structures control points			
Point No.	Northing	Easting	Elevation
240	Y=1879410.0887	X=6535303.4256	742.0
241	Y=1879414.2582	X=6535299.6026	742.0
242	Y=1879410.2620	X=6535299.4293	742.0
℄ 243	Y=1879414.8284	X=6535286.8318	742.0
244	Y=1879411.2848	X=6535275.8361	742.0
245	Y=1879415.2811	X=6535276.0094	742.0
246	Y=1879411.4581	X=6535271.8399	742.0
247	Y=1879460.8392	X=6535250.5944	747.0
248	Y=1879476.3348	X=6535299.2056	747.0
249	Y=1879472.3385	X=6535299.0323	747.0
℄ 250	Y=1879472.7583	X=6535289.3513	747.0
251	Y=1879473.5943	X=6535270.0667	747.0
252	Y=1879477.5906	X=6535270.2393	747.0
253	Y=1879477.7638	X=6535266.2437	747.0

Grading and structures control points			
Point No.	Northing	Easting	Elevation
280	Y=1879611.3262	X=6535294.7632	747.0
281	Y=1879615.0525	X=6535290.5071	747.0
282	Y=1879611.0613	X=6535290.7720	747.0
℄ 283	Y=1879614.2956	X=6535278.4829	747.0
284	Y=1879609.5694	X=6535268.2939	747.0
285	Y=1879613.5606	X=6535268.0290	747.0
286	Y=1879609.3045	X=6535264.3027	747.0
287	Y=1879677.5721	X=6535296.2804	754.0
288	Y=1879677.3072	X=6535292.2891	754.0
289	Y=1879673.3160	X=6535292.5540	754.0
℄ 290	Y=1879673.0349	X=6535274.5904	754.0
291	Y=1879670.7111	X=6535253.3057	754.0
292	Y=1879674.7023	X=6535253.0409	754.0
293	Y=1879674.4374	X=6535249.0496	754.0

BENCH MARK

CP # 325
1" IP W/PLASTIC PLUG
LS7848
N 1879973.4403
E 6535148.4696
ELEV. 733.72'

DATE	MK	DESCRIPTION

REVISIONS

REGISTERED PROFESSIONAL ENGINEER ABED MOHSEN NO. C 59117 EXP. 6/30/11 CIVIL STATE OF CALIFORNIA

PROJECT ENGINEER 1/28/10 DATE

COUNTY OF LOS ANGELES DEPARTMENT OF PUBLIC WORKS

EATON WASH

SPREADING GROUNDS IMPROVEMENTS

BASIN 7, BASIN 8, AND BASIN 9 GRADING PLAN

PIN FCC0001153 | JOB X5009690 | DWG 24-D77.11 | SHEET 11 OF 19

DRAFTER C. ARANKI | DESIGNER C. ARANKI | CHECKER A. MOHSEN | CADD PROJECT FILE NAME EATON WASH-3 SH. 11 | REVIEWED BY | DATE 1-28-10

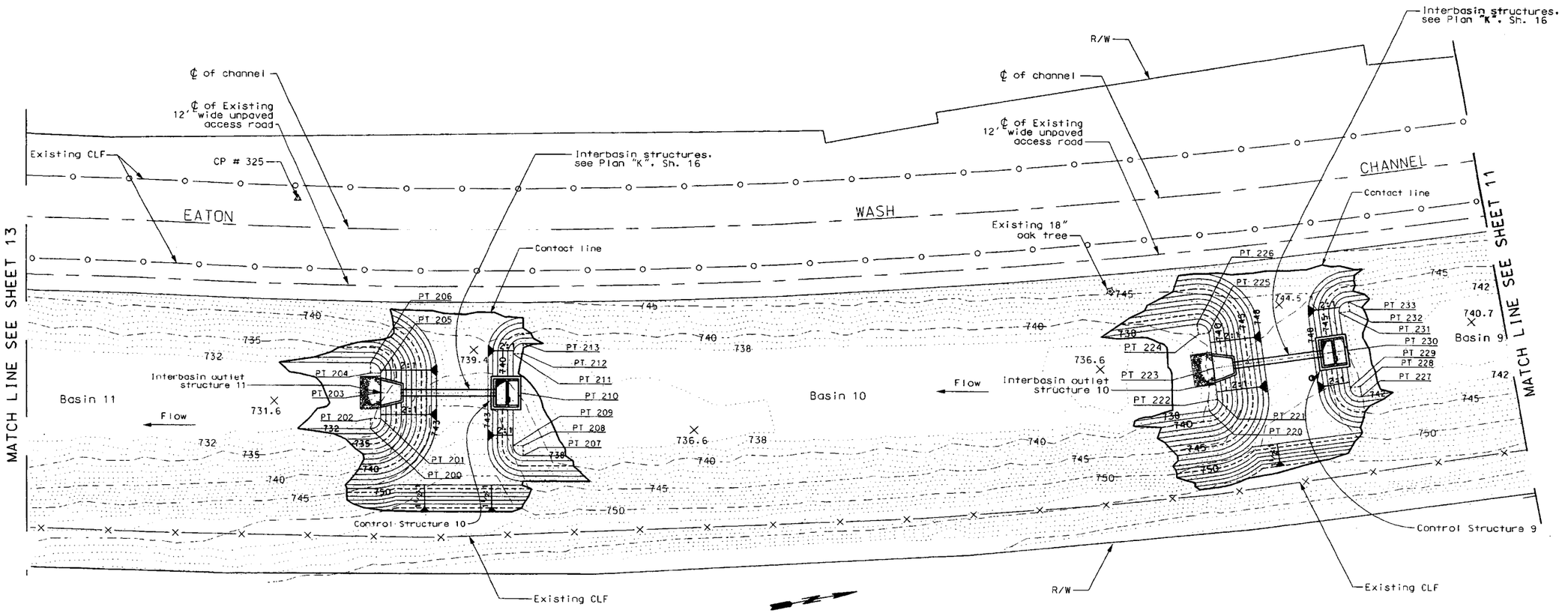

PLAN

SCALE: 1" = 20'

Grading and structures control points			
Point No.	Northing	Easting	Elevation
200	Y=1878885.2610	X=6535242.0974	732.0
201	Y=1878889.9343	X=6535238.9099	732.0
202	Y=1878886.0039	X=6535238.1670	732.0
℄ 203	Y=1878891.8254	X=6535228.9053	732.0
204	Y=1878889.3303	X=6535220.5694	732.0
205	Y=1878893.2607	X=6535221.3123	732.0
206	Y=1878890.0732	X=6535216.6390	732.0
207	Y=1878942.3478	X=6535263.5677	738.0
208	Y=1878943.0907	X=6535259.6373	738.0
209	Y=1878939.1603	X=6535258.8944	738.0
℄ 210	Y=1878946.0392	X=6535239.1534	738.0
211	Y=1878945.3643	X=6535223.4277	738.0
212	Y=1878949.7947	X=6535224.1706	738.0
213	Y=1878950.5377	X=6535220.2402	738.0

Grading and structures control points			
Point No.	Northing	Easting	Elevation
220	Y=1879212.4227	X=6535294.9045	738.0
221	Y=1879216.5922	X=6535291.0815	738.0
222	Y=1879212.5959	X=6535290.9082	748.0
℄ 223	Y=1879217.1290	X=6535278.6997	738.0
224	Y=1879213.7399	X=6535264.5230	738.0
225	Y=1879217.7361	X=6535264.6962	738.0
226	Y=1879213.9131	X=6535260.5267	738.0
227	Y=1879272.2638	X=6535299.9136	742.0
228	Y=1879272.4371	X=6535295.9173	742.0
229	Y=1879268.4408	X=6535295.7441	742.0
℄ 230	Y=1879270.2026	X=6535281.0068	742.0
231	Y=1879269.7346	X=6535265.9013	742.0
232	Y=1879273.7309	X=6535266.0745	742.0
233	Y=1879273.9041	X=6535262.0783	742.0

BENCH MARK

CP # 325
1" IP W/PLASTIC PLUG
LS7848
N 1879973.4403
E 6535148.4696
ELEV. 733.72'

DATE	MK	DESCRIPTION

REVISIONS

REGISTERED PROFESSIONAL ENGINEER ABED MOHSEN NO. C 59117 EXP. 6/30/11 CIVIL STATE OF CALIFORNIA

PROJECT ENGINEER 1/28/10 DATE

COUNTY OF LOS ANGELES DEPARTMENT OF PUBLIC WORKS

EATON WASH

SPREADING GROUNDS IMPROVEMENTS

BASIN 9, BASIN 10, AND BASIN 11
GRADING PLAN

PIN FCC0001153 | JOB X5009690 | DWG 24-D77.12 | SHEET 12 OF 19

DRAFTER P. ROMERO | DESIGNER P. ROMERO | CHECKER A. MOHSEN | CADD PROJECT FILE NAME EATON WASH-3 SH. 12 | REVISED BY | DATE 1-28-10

DATE: 10/07/09 TIME: 9:19:45 FILE: 24-D77.12

EATON WASH_ABED.dgn 02/09/2010 8:51:24 AM

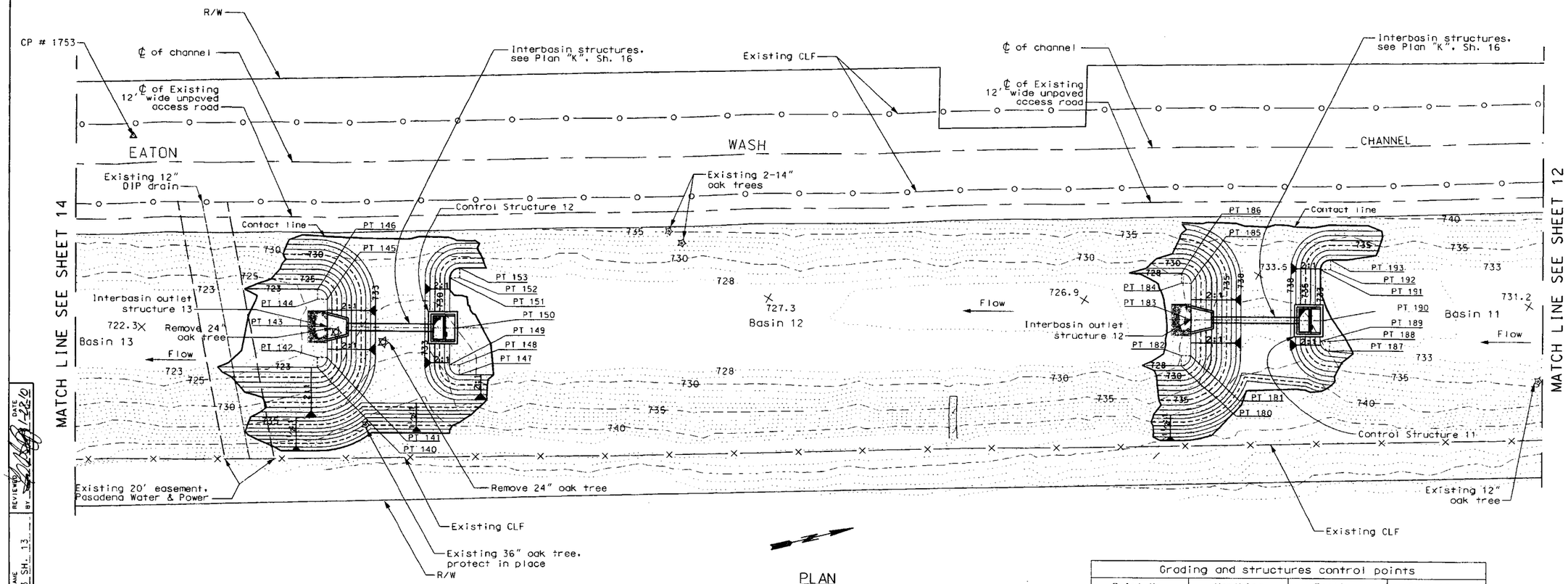

PLAN

SCALE: 1" = 20'

Grading and structures control points			
Point No.	Northing	Easting	Elevation
140	Y=1878256.9463	X=6535110.0742	723.0
141	Y=1878261.7809	X=6535107.1371	723.0
142	Y=1878257.8956	X=6535059.2090	723.0
℄ 143	Y=1878264.7285	X=6535095.0650	723.0
144	Y=1878263.4870	X=6535083.2860	723.0
145	Y=1878267.3728	X=6535084.2348	723.0
146	Y=1878264.4363	X=6535079.3980	723.0
147	Y=1878312.7085	X=6535126.2176	728.0
148	Y=1878313.6573	X=6535122.3318	728.0
149	Y=1878309.7714	X=6535121.3830	728.0
℄ 150	Y=1878316.3822	X=6535107.6892	728.0
151	Y=1878318.1004	X=6535087.2707	728.0
152	Y=1878321.9862	X=6535088.2194	728.0
153	Y=1878322.9350	X=6535084.3336	728.0

Grading and structures control points			
Point No.	Northing	Easting	Elevation
180	Y=1878600.6030	X=6535190.5968	728.0
181	Y=1878605.4354	X=6535187.6560	728.0
182	Y=1878601.5488	X=6535186.7102	728.0
℄ 183	Y=1878608.8758	X=6535173.5190	728.0
184	Y=1878608.5113	X=6535158.1003	728.0
185	Y=1878612.3979	X=6535159.0461	728.0
186	Y=1878609.4571	X=6535154.2137	728.0
187	Y=1878656.0078	X=6535149.0098	732.0
188	Y=1878660.8402	X=6535146.0691	732.0
189	Y=1878671.8981	X=6535148.6834	732.0
℄ 190	Y=1878660.5076	X=6535186.1349	732.0
192	Y=1878645.0522	X=6535209.4568	732.0
191	Y=1878642.4495	X=6535204.7226	732.0
193	Y=1878662.3785	X=6535215.5261	732.0

BENCH MARK

CP # 1753
1" IP W/PLASTIC PLUG
LS7848
N 1879953.9589
E 6535177.4589
ELEV. 769.46'

DATE	MK	DESCRIPTION

REVISIONS

REGISTERED PROFESSIONAL ENGINEER ABED MOHSEN C 59117 EXP 6/30/11 CIVIL STATE OF CALIFORNIA

PROJECT ENGINEER 1/28/10 DATE

COUNTY OF LOS ANGELES DEPARTMENT OF PUBLIC WORKS

EATON WASH

SPREADING GROUNDS IMPROVEMENTS

BASIN 11, BASIN 12, AND BASIN 13 GRADING PLAN

PIN FCC0001153 | JOB X5009690 | DWG 24-077.13 | SHEET 13 OF 19

DRAFTER P. ROMERO | DESIGNER P. ROMERO | CHECKER A. MOHSEN | CADD PROJECT FILE NAME EATON WASH-3 SH. 13 | REVIEWED BY | DATE 1-22-10

DATE: 10/27/09 TIME: 07:19:45 FILE: BASIN 13

EATON WASH_ABED.dgn 02/09/2010 9:29:13 AM

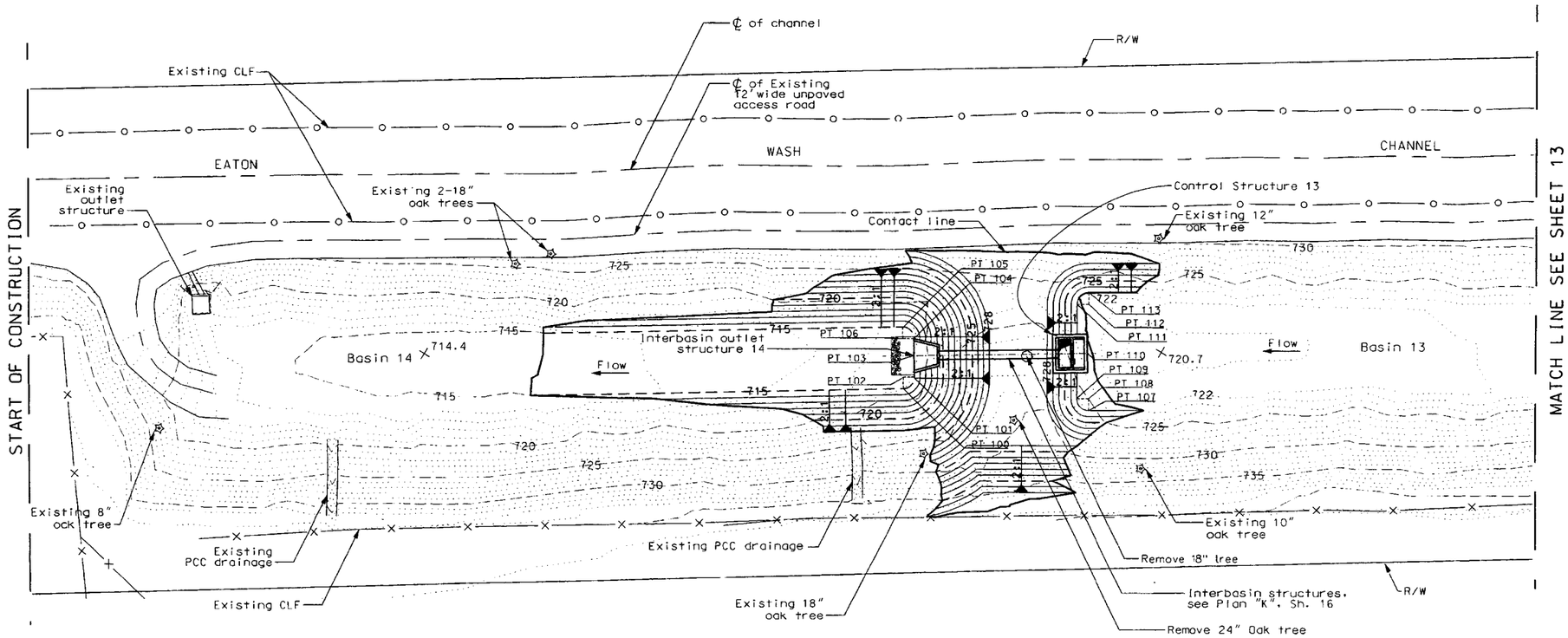

PLAN

SCALE: 1" = 20'

Grading and structures control points			
Point No.	Northing	Easting	Elevation
100	1877951.4620	6535034.9704	715.0
101	1877956.2337	6535031.9323	715.0
102	1877952.3288	6535031.0655	715.0
℄ 103	1877957.7919	6535024.9235	715.0
104	1877959.0544	6535019.2802	715.0
105	1877956.0243	6535014.5034	715.0
106	1877955.1509	6535018.4069	715.0
107	1878011.8463	6535056.7846	722.0
108	1878012.7802	6535052.8952	722.0
109	1878008.8909	6535051.9612	722.0
℄ 110	1878015.9142	6535037.9272	722.0
111	1878016.3481	6535020.9086	722.0
112	1878020.2375	6535021.8426	722.0
113	1878021.1715	6535017.9532	722.0

BENCH MARK

CP # 1753
1" IP W/PLASTIC PLUG
LS7848
N 1879953.9589
E 6535177.4589
ELEV. 769.46'

DATE	MK	DESCRIPTION

REVISIONS

REGISTERED PROFESSIONAL ENGINEER ABED MOHSEN NO. C 59117 EXP. 6/30/11 CIVIL STATE OF CALIFORNIA

PROJECT ENGINEER — DATE 1/28/10

COUNTY OF LOS ANGELES DEPARTMENT OF PUBLIC WORKS

EATON WASH

SPREADING GROUNDS IMPROVEMENTS

BASIN 13 AND BASIN 14 GRADING PLAN

PIN FCC0001153 | JOB X5009690 | DWG 24-D77.14 | SHEET 14 OF 19

DRAFTER P. ROMERO | DESIGNER P. ROMERO | CHECKER A. MOHSEN | CADD PROJECT FILE NAME EATON WASH-3 SH. 14 | REVIEWED BY | DATE

EATON WASH_ABED.dgn 02/09/2010 9:13:27 AM

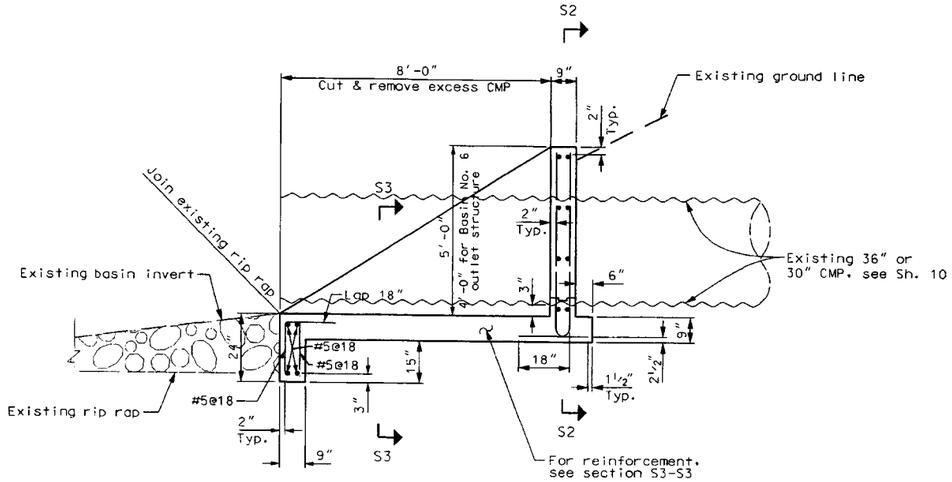

SECTION S1-S1
SCALE ½" = 1'-0"

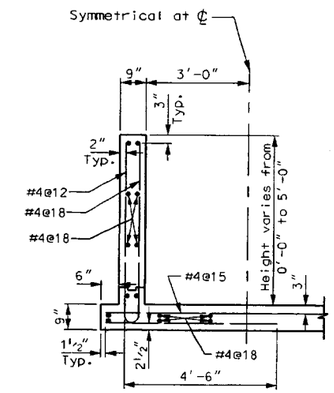

SECTION S3-S3
SCALE ½" = 1'-0"

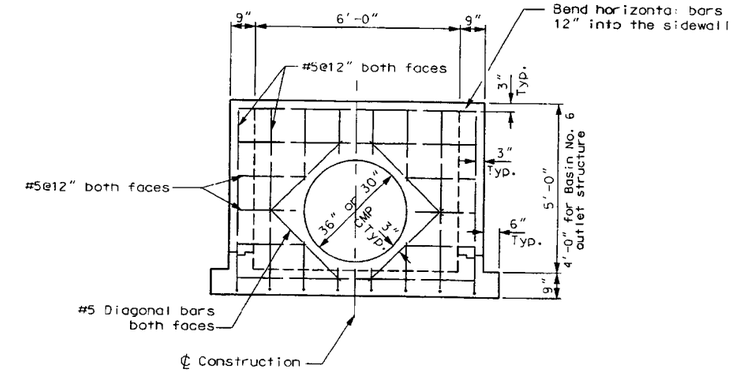

SECTION S2-S2
SCALE ½" = 1'-0"

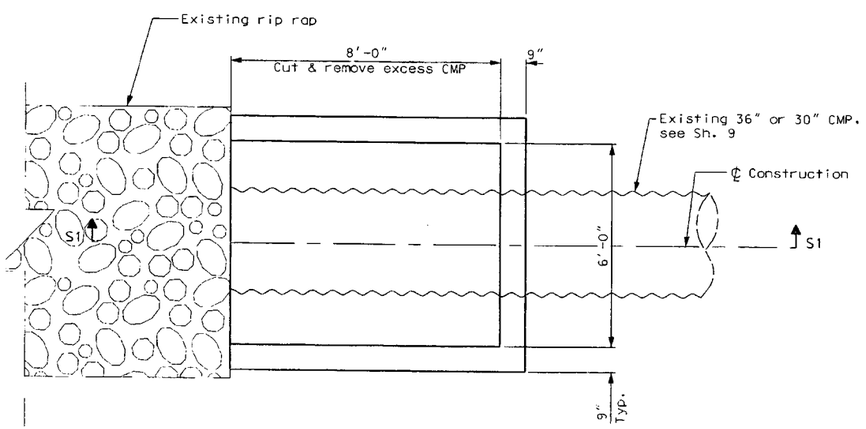

OUTLET STRUCTURE DETAIL (SH. 10)
SCALE ¼" = 1'-0"

STRUCTURAL DESIGN CRITERIA

L.A.C.F.C.D. STRUCTURAL DESIGN MANUAL
DATED APRIL 1982

LOADS

External 62.5 p.s.f. E.F.P.

Internal 40.0 p.s.f. E.F.P.

ALLOWABLE STRESSES

f'c= 4000 psi, f'c= 5000 psi for invert only
fc = 1800 psi
fs = 24,000 psi
n = 8
Shear and bond stresses per A.C.I. 318-63
foundation modulus k = 165 p.c.i.

STRUCTURAL NOTES

1. DIMENSIONS FROM FACE OF CONCRETE TO STEEL ARE TO CENTER OF BAR, UNLESS OTHERWISE SHOWN.
2. CONCRETE DIMENSIONS SHALL BE MEASURED HORIZONTALLY OR VERTICALLY ON THE PROFILE, AND PARALLEL TO OR AT RIGHT ANGLES (OR RADIALLY) TO CENTERLINE OF CONDUIT ON THE PLAN EXCEPT AS OTHERWISE SHOWN.
3. ALL BAR BENDS AND HOOKS SHALL CONFORM TO THE AMERICAN CONCRETE INSTITUTE'S "BUILDING CODE REQUIREMENT FOR REINFORCED CONCRETE", LATEST EDITION.
4. TRANSVERSE CONSTRUCTION JOINTS SHALL NOT BE PLACED WITHIN 30 INCHES OF INLETS.
5. TRANSVERSE CONSTRUCTION JOINTS IN WALLS AND SLABS SHALL BE IN THE SAME PLANE. NO STAGGERING OF JOINTS WILL BE PERMITTED. TRANSVERSE CONSTRUCTION JOINTS SHALL BE NORMAL OR RADIAL TO THE CENTERLINE OF CONSTRUCTION.
6. THE TRANSVERSE REINFORCING BARS SHALL TERMINATE ONE AND ONE-HALF INCHES FROM THE CONCRETE SURFACES UNLESS OTHERWISE SHOWN ON THE STRUCTURAL DETAILS.
7. EXPOSED EDGES OF CONCRETE MEMBERS SHALL BE ROUNDED OR BEVELED.
8. NO SPLICES IN TRANSVERSE BARS REINFORCEMENT WILL BE PERMITTED OTHER THAN SHOWN ON THE DRAWING WITHOUT APPROVAL OF THE ENGINEER. NO MORE THAN TWO SPLICES WILL BE PERMITTED IN ANY LONGITUDINAL BAR BETWEEN TRANSVERSE JOINTS. SPLICES SHALL BE STAGGERED.
9. LONGITUDINAL BARS SHALL BE LAPPED 20 BAR DIAMETERS AT SPLICES. TRANSVERSE BARS SHALL BE LAPPED 30 BAR DIAMETERS AT SPLICES.
10. LONGITUDINAL BARS SHALL TERMINATE TWO INCHES FROM TRANSVERSE CONSTRUCTION JOINTS.
11. TRANSVERSE JOINTS SHALL BE PLACED AT THE JUNCTION OF RECTANGULAR OPEN CHANNEL SECTIONS WITH CLOSED CONDUIT SECTIONS.
12. AT THE BEGINNING AND ENDING OF ALL POURS, A COMPLETE CURTAIN OF REINFORCEMENT BARS SHALL BE PLACED THREE INCHES FROM THE TRANSVERSE CONSTRUCTION JOINTS.

DATE	MK	DESCRIPTION

REVISIONS

REGISTERED PROFESSIONAL ENGINEER
ABED MOHSEN
NO. C 59117
EXP. 6/30/11
CIVIL
STATE OF CALIFORNIA

Abed Mohsen 1/28/10
PROJECT ENGINEER DATE

COUNTY OF LOS ANGELES DEPARTMENT OF PUBLIC WORKS

EATON WASH
SPREADING GROUNDS IMPROVEMENTS

DETAIL AND SECTIONS
OUTLET STRUCTURES
BASINS 4, 6, & 7

PIN FCC0001153 | JOB X5009690 | DWG 24-D77.9 | SHEET 15 OF 19

DRAFTER P. ROMERO | DESIGNER P. ROMERO | CHECKER A. MOHSEN | CADD PROJECT FILE NAME FCC0001153_FLD_SH15.DGN | REVISED BY | DATE

DATE: MDATE2 TIME: STIME2 FILE: MFILE1

EATON WASH.dgn 02/09/2010 9:12:52 AM

TABLE OF DIMENSIONS AND ELEVATIONS
INTER-BASIN CONDUITS AND CONTROL STRUCTURES

Basin Structures	H	B Sill Elevation	C Invert Elevation at Control Structure	D Invert Elevation at Outlet	E Invert Elevation at Inlet	L RCP Length	S RCP Slope	U/S Basin Water Surface Elevation	U/S Basin Bottom Elevation	D/S Basin Bottom Elevation
7 to 8	6'	757.5	754.0	747.25	754.0	41'	.1645	759.0	754.0	747.0
8 to 9	7'	751.5	747.0	742.25	747.0	40'	.1183	753.0	747.0	742.0
9 to 10	6'	745.5	742.0	738.25	742.0	36'	.1063	747.0	742.0	738.0
10 to 11	5'	740.5	738.0	732.25	738.0	38'	.1540	742.0	738.0	732.0
11 to 12	6'	735.5	732.0	728.25	732.0	36'	.1062	737.0	732.0	728.0
12 to 13	5'	730.5	728.0	723.25	728.0	36'	.1344	732.0	728.0	723.0
13 to 14	5'	725.5	723.0	715.25	723.0	42'	.1850	727.0	723.0	715.0

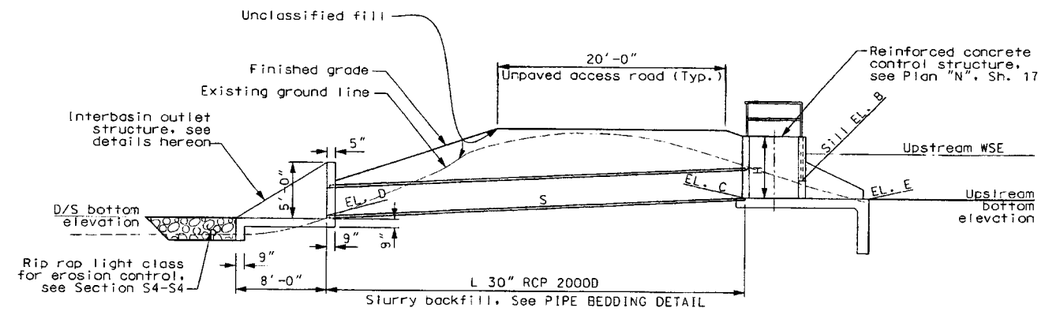

TYPICAL INTER-BASIN STRUCTURE
PROFILE
SCALE: 1"=6'-0"

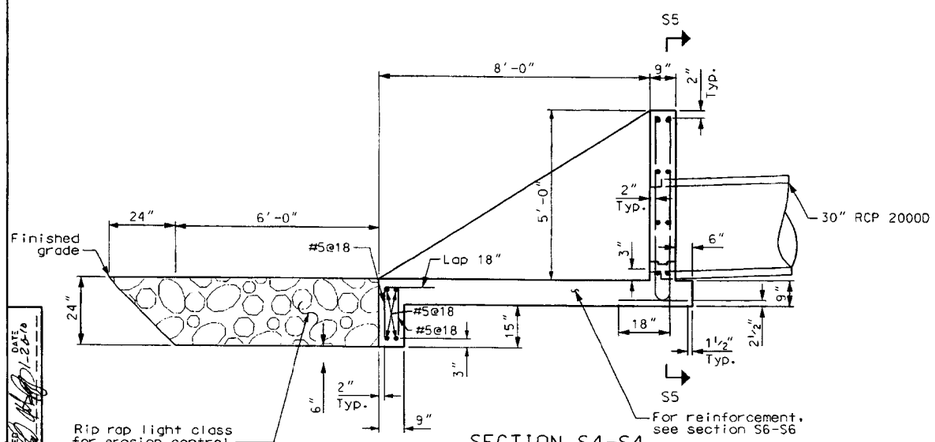

SECTION S4-S4
SCALE: ½"=1'-0"

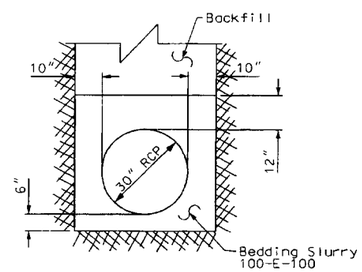

PIPE BEDDING DETAIL
SCALE: ½"=1'-0"

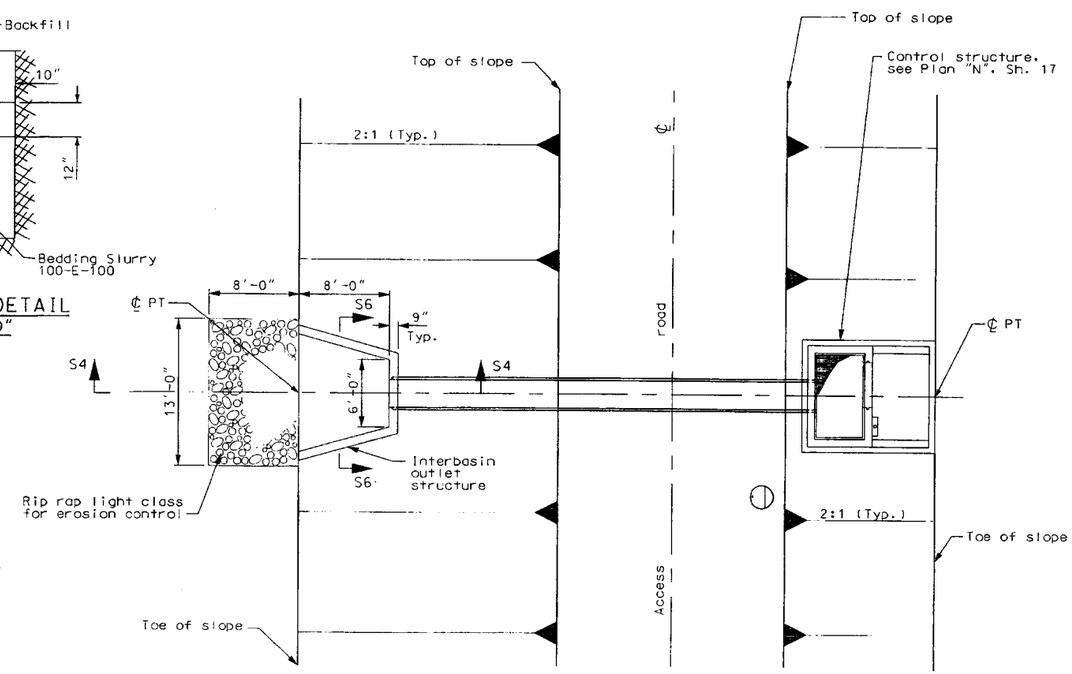

PLAN "K" (Sh. 11-14)
TYPICAL INTER-BASIN STRUCTURE
SCALE: 1"=6'-0"

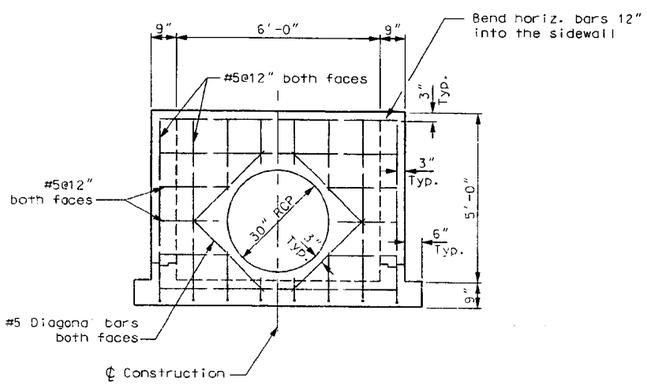

SECTION S5-S5
SCALE: ½"=1'-0"

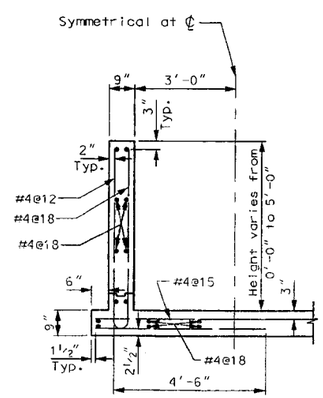

SECTION S6-S6
SCALE: ½"=1'-0"

DATE	MK	DESCRIPTION

REVISIONS

REGISTERED PROFESSIONAL ENGINEER — ABED MOHSEN — NO. C 59117 — EXP. 6/30/11 — CIVIL — STATE OF CALIFORNIA

PROJECT ENGINEER — DATE 1/28/10

COUNTY OF LOS ANGELES DEPARTMENT OF PUBLIC WORKS

EATON WASH
SPREADING GROUNDS IMPROVEMENTS

INTER-BASIN STRUCTURE
DETAILS AND SECTIONS

PIN FCC0001153 | JOB X5009690 | DWG 24-077.16 | SHEET 16 OF 19

DRAFTER P. ROMERO | DESIGNER P. ROMERO | CHECKER A. MOHSEN | CADD PROJECT FILE NAME EATON WASH-3 SH. 16 | REVIEWED BY | DATE 1-28-10

DATE: 8/04/9 TIME: 8:17:16 FILE: SP1C1.9

EATON WASH_ABED dgn 02/09/2010 9:12:27 AM

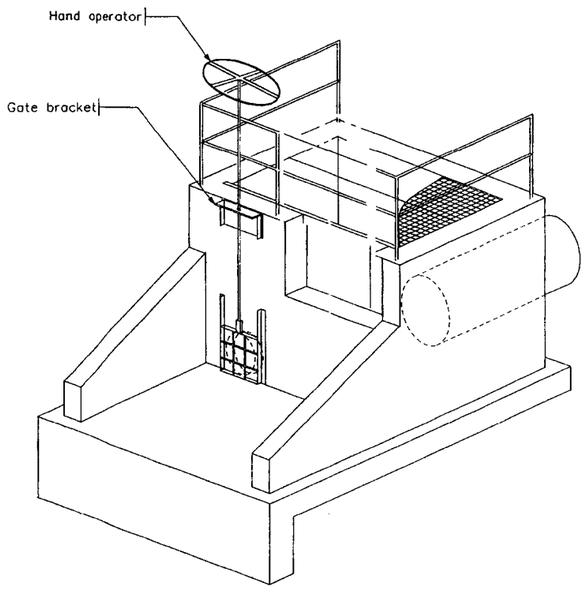

DETAIL "M"
CONTROL STRUCTURE PICTORIAL VIEW
NOT TO SCALE

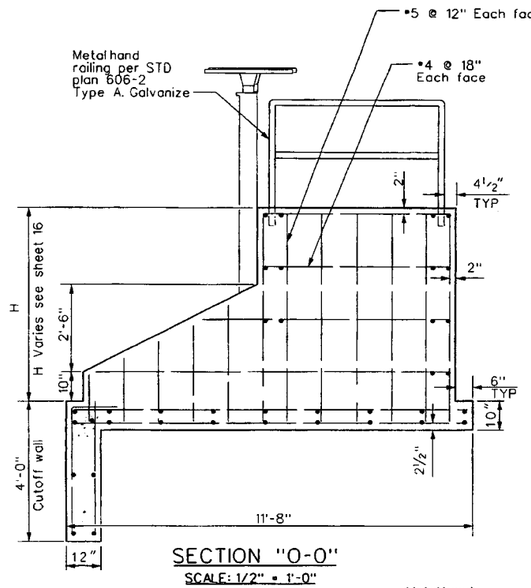

SECTION "O-O"
SCALE: 1/2" = 1'-0"

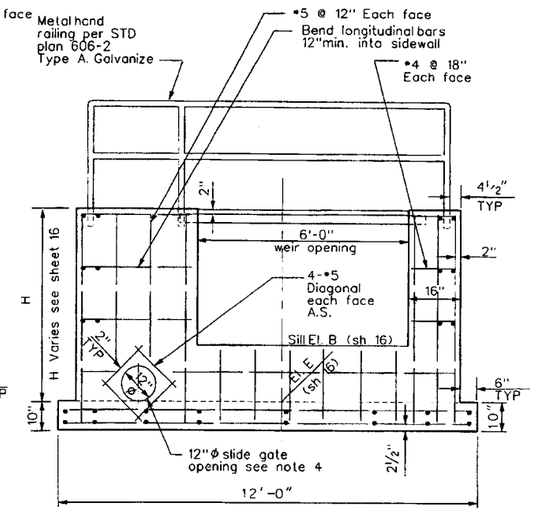

SECTION "P-P"
SCALE: 1/2" = 1'-0"

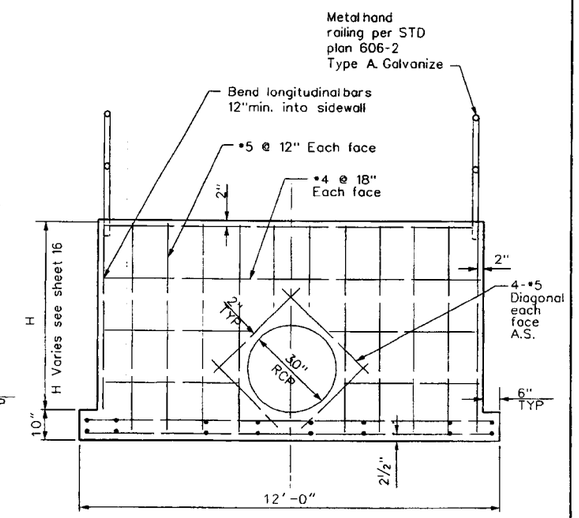

SECTION "Q-Q"
SCALE: 1/2" = 1'-0"

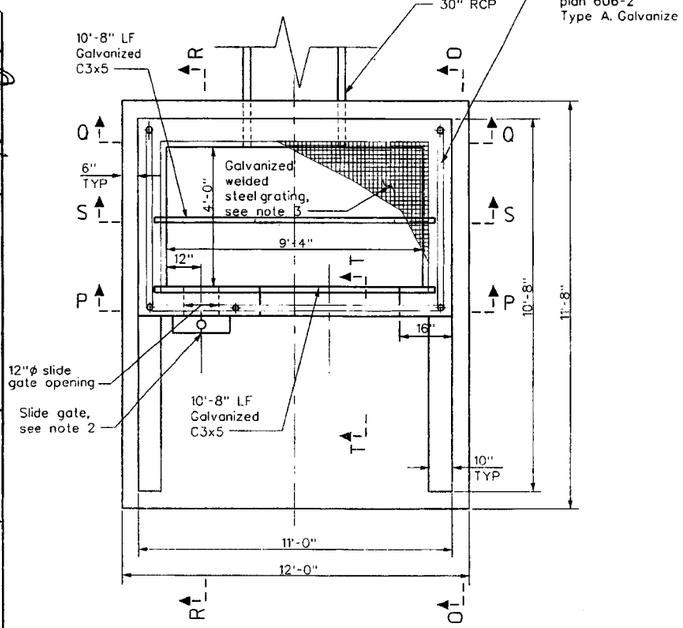

PLAN "N"
CONTROL STRUCTURE PLAN VIEW
NOT TO SCALE

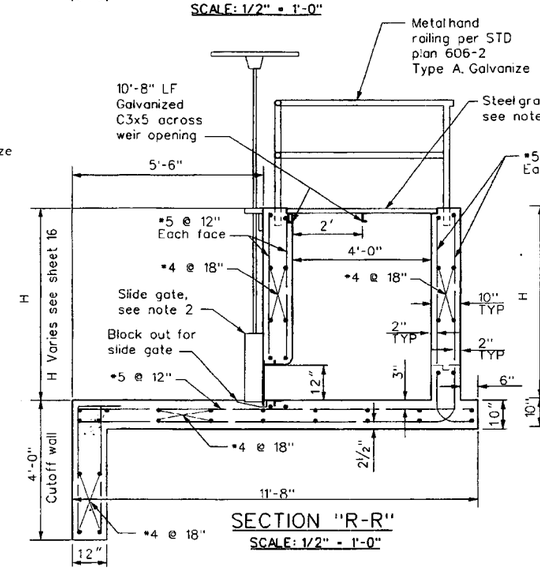

SECTION "R-R"
SCALE: 1/2" = 1'-0"

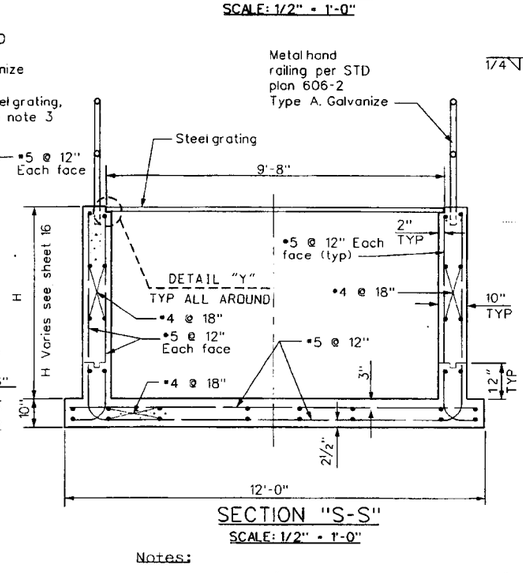

SECTION "S-S"
SCALE: 1/2" = 1'-0"

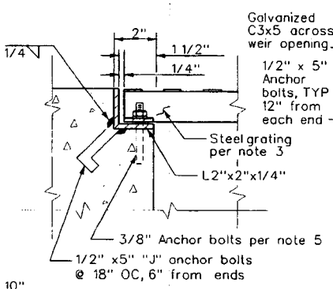

DETAIL "Y"
GRATING SUPPORT LEDGE
NOT TO SCALE

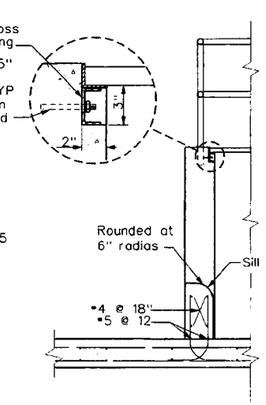

SECTION "T-T"
SCALE: 1/2" = 1'-0"

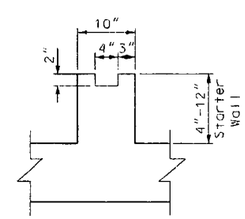

WALL BASE
LONGITUDINAL CONSTRUCTION JOINT
SCALE: 1" = 1'-0"

Notes:

1- See table of "Dimensions and Elevations" on sheet 16.
2- 12" Flush bottom slide gate, RODNEY HUNT HY-Q or agency approved equal.
3- Galvanized welded steel grating 9'- 8" x 4'- 4". Bearing bars shall be $1\frac{1}{2}$" x $\frac{3}{16}$" @ $\frac{13}{16}$" OC. cross bars shall be @ 4" OC.bearing bars be parallel with the shortest span.
4- Galvanize all steel for grating support ledge and anchor bolt tabs after fabrication.
5- Weld $\frac{1}{8}$" thick steel tabs to grate and drill holes for $\frac{3}{8}$" anchor bolt. 8 tabs (2 each side) required for each control structure.
6- See structural notes and structural design criteria. sh 15

DATE	MK	DESCRIPTION

REVISIONS

REGISTERED PROFESSIONAL ENGINEER A. MOHSEN NO. C 59117 EXP. 6-30-11 CIVIL STATE OF CALIFORNIA

PROJECT ENGINEER — DATE 2/2/10

COUNTY OF LOS ANGELES DEPARTMENT OF PUBLIC WORKS

EATON WASH
SPREADING GROUNDS IMPROVEMENTS
CONTROL STRUCTURE STRUCTURAL DETAILS

FCC0001153 | JOB X5009690 | DWG 24-D77.17 | SHEET 17 OF 19

DRAFTER G. ARANKI | DESIGNER G. ARANKI | CHECKER A. MOHSEN | CADD PROJECT FILE NAME FCC0001153 EATON WASH SH. 17 | REVIEWED BY | DATE 2/2/10

DATE: SDATE$ TIME: STIME$ FILE: IFILE$

SEE SANITATION DISTRICTS FOR SPECIAL CONNECTION CHARGES (562) 908-4288, EXT 2727

SCALE: HOR. 1"= 40' VERT. 1"=8'

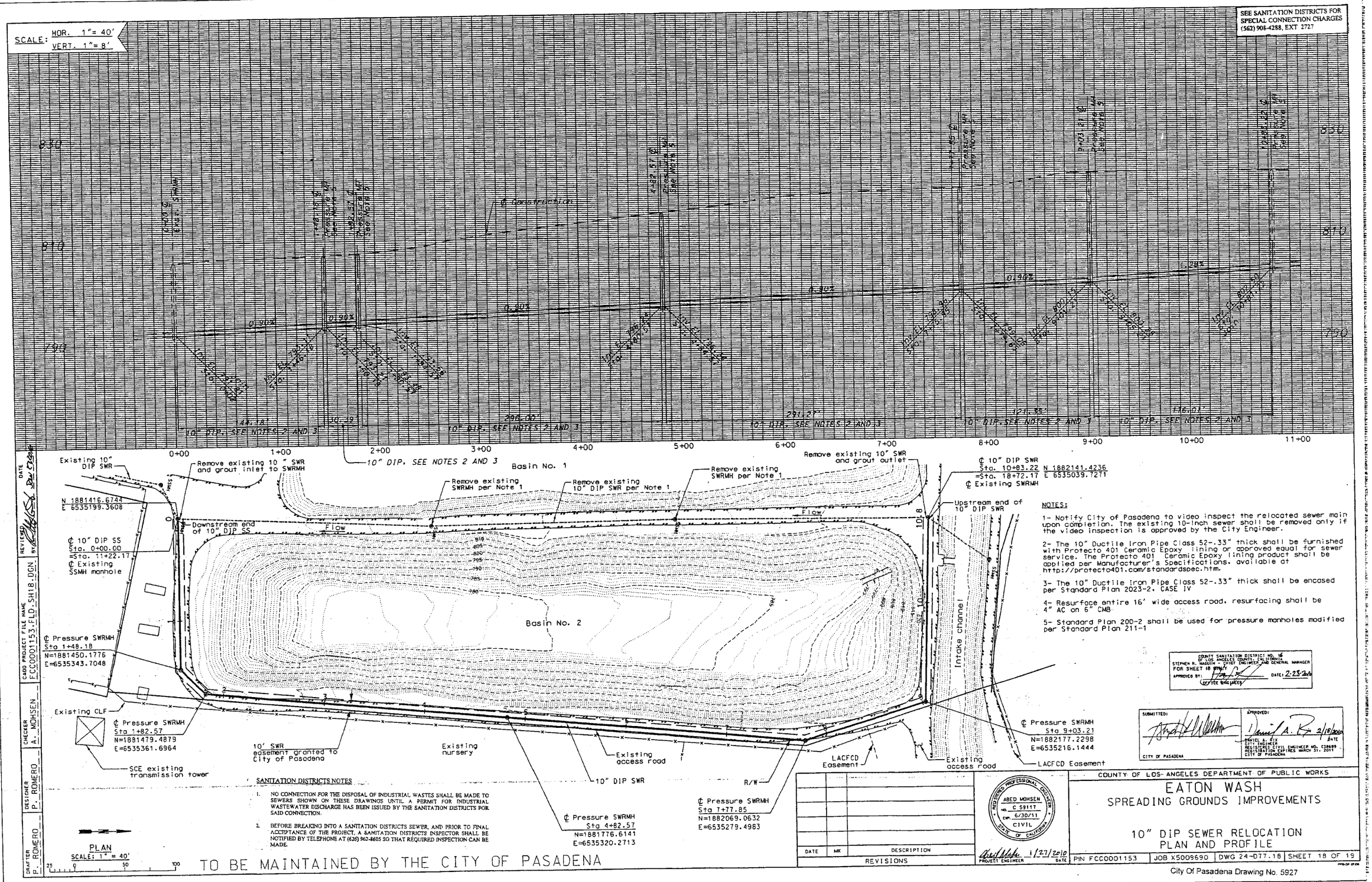

NOTES:

1- Notify City of Pasadena to video inspect the relocated sewer main upon completion. The existing 10-inch sewer shall be removed only if the video inspection is approved by the City Engineer.

2- The 10" Ductile Iron Pipe Class 52-.33" thick shall be furnished with Protecto 401 Ceramic Epoxy lining or approved equal for sewer service. The Protecto 401 Ceramic Epoxy lining product shall be applied per Manufacturer's Specifications, available at http://protecto401.com/standardspec.htm.

3- The 10" Ductile Iron Pipe Class 52-.33" thick shall be encased per Standard Plan 2023-2, CASE IV

4- Resurface entire 16' wide access road, resurfacing shall be 4" AC on 6" CMB

5- Standard Plan 200-2 shall be used for pressure manholes modified per Standard Plan 211-1

SANITATION DISTRICTS NOTES

1. NO CONNECTION FOR THE DISPOSAL OF INDUSTRIAL WASTES SHALL BE MADE TO SEWERS SHOWN ON THESE DRAWINGS UNTIL A PERMIT FOR INDUSTRIAL WASTEWATER DISCHARGE HAS BEEN ISSUED BY THE SANITATION DISTRICTS FOR SAID CONNECTION.

2. BEFORE BREAKING INTO A SANITATION DISTRICTS SEWER, AND PRIOR TO FINAL ACCEPTANCE OF THE PROJECT, A SANITATION DISTRICTS INSPECTOR SHALL BE NOTIFIED BY TELEPHONE AT (626) 962-8605 SO THAT REQUIRED INSPECTION CAN BE MADE.

TO BE MAINTAINED BY THE CITY OF PASADENA

COUNTY SANITATION DISTRICT NO. 16 OF LOS ANGELES COUNTY, CALIFORNIA
STEPHEN R. MAGUIN - CHIEF ENGINEER AND GENERAL MANAGER
FOR SHEET 18 OF 19
APPROVED BY: DATE: 2-23-2010
(OFFICE ENGINEER)

SUBMITTED: CITY OF PASADENA

APPROVED: DANIEL A. RIX 2/18/2010 DATE
CITY ENGINEER
REGISTERED CIVIL ENGINEER NO. C38699
REGISTRATION EXPIRES MARCH 31, 2011
CITY OF PASADENA

DATE	MK	DESCRIPTION

REVISIONS

REGISTERED PROFESSIONAL ENGINEER ABED MOHSEN NO. C 59117 EXP. 6/30/11 CIVIL STATE OF CALIFORNIA

PROJECT ENGINEER 1/27/2010 DATE

COUNTY OF LOS ANGELES DEPARTMENT OF PUBLIC WORKS

EATON WASH
SPREADING GROUNDS IMPROVEMENTS

10" DIP SEWER RELOCATION PLAN AND PROFILE

PIN FCC0001153	JOB X5009690	DWG 24-D77.18	SHEET 18 OF 19

City Of Pasadena Drawing No. 5927

DRAFTER P. ROMERO | DESIGNER P. ROMERO | CHECKER A. MOHSEN | CADD PROJECT FILE NAME FCC0001153-FLD-SH18.DGN | REVISED BY | DATE

SUMMARY LOG OF BORING B1

Geotechnical and Materials Engineering Division - Los Angeles County Department of Public Works

PROJECT Eaton Wash Spridg. Grounds Improv. CLIENT DESIGN DIVISION PAGE 1 OF 1
PROJECT ID FCC0001153 DRILLER LACDPW LOGGED BY Erick Del Bosque TOTAL DEPTH 21.5'
TYPE/DIAMETER OF BORING Hollow Stem Rig - 6.5" outside diameter auger ELEVATION N/A
DATE(S) 9/14/09 MONITORING WELL INSTALLED? NO HAMMER WEIGHT (LBS.) 140 DROP HEIGHT (IN.) 30
LOCATION Pasadena, CA (N34° 9' 44.08"; W118° 5' 13.95")

Note: This log presents observations and interpretations that are valid only for the specific date and location of the boring. Subsurface conditions may change over time and with more detailed observations and data as well as by the dynamics and mechanics of the boring. Subsurface conditions may between borings and with time. Material descriptions are derived using visual classification methods and may vary from analytical/mechanical classification based on laboratory testing.

USCS	Laboratory Testing: In-situ γ_d (pcf)	In-situ MC (%)	Sieve % Passing No. 4	Sieve % Passing No. 200	Depth (feet)	Field Data: Blows per 6 in.	Sample No.	Blow Count (Corr. N-Value)	Interpretations: Attitudes, Comments: PID - PPM	Graphic Log	LITHOLOGIC DESCRIPTION
					0						3" AC with ~ 5" CMB
SM					1–4						Silty Sand, loose, moist, brown, trace gravel, lenses of silty clay
	111.7	5.4			5–6	1R		6 6 8	DS		
					7–8		2B				
SP	122.8	4.0			10–11	3R		18 18 28	SE		Poorly Graded Sand, medium dense, moist, brown, trace gravel
SP-SM					12–14		4B		MD		Poorly Graded Sand with Silt, medium dense, moist, brown
SP					15–16	5R		22 20 25	Invert Depth		Poorly Graded Sand, medium dense, moist, brown, some gravel
SM					20–21	6R		4 13 19			Silty Sand, medium dense, moist, gray and brown

SUMMARY LOG OF BORING B2

Geotechnical and Materials Engineering Division - Los Angeles County Department of Public Works

PROJECT Eaton Wash Spridg. Grounds Improv. CLIENT DESIGN DIVISION PAGE 1 OF 1
PROJECT ID FCC0001153 DRILLER LACDPW LOGGED BY Erick Del Bosque TOTAL DEPTH 25'
TYPE/DIAMETER OF BORING Hollow Stem Rig - 6.5" outside diameter auger ELEVATION N/A
DATE(S) 9/14/09 MONITORING WELL INSTALLED? NO HAMMER WEIGHT (LBS.) 140 DROP HEIGHT (IN.) 30
LOCATION Pasadena, CA (N34° 9' 46.82"; W118° 5' 13.44")

Note: This log presents observations and interpretations that are valid only for the specific date and location of the boring. Subsurface conditions may change over time and with more detailed observations and data as well as by the dynamics and mechanics of the boring. Subsurface conditions may between borings and with time. Material descriptions are derived using visual classification methods and may vary from analytical/mechanical classification based on laboratory testing.

USCS	Laboratory Testing: In-situ γ_d (pcf)	In-situ MC (%)	Sieve % Passing No. 4	Sieve % Passing No. 200	Depth (feet)	Field Data: Blows per 6 in.	Sample No.	Blow Count (Corr. N-Value)	Interpretations: Attitudes, Comments: PID - PPM	Graphic Log	LITHOLOGIC DESCRIPTION
SP					0–1						Poorly Graded Sand with Gravel, loose, dry, light brown to brown
					5–6	1R		8 13 17			@ 5', Blow count not representative of loose soil because of gravel stuck in sampler
					7–8		2B		CR		
					10–11		3Rag	11 14 15			
	123.4	1.1			15–16	4R		22 37 29	DS		@ 15', Blow count not representative of loose soil because of gravel stuck in sampler
					18–19				Invert Depth		
					20–21	5R		32 63 54			@ 20', Blow count not representative of loose soil because of gravel stuck in sampler

SUMMARY LOG OF BORING B3

Geotechnical and Materials Engineering Division - Los Angeles County Department of Public Works

PROJECT Eaton Wash Spridg. Grounds Improv. CLIENT DESIGN DIVISION PAGE 1 OF 1
PROJECT ID FCC0001153 DRILLER LACDPW LOGGED BY Erick Del Bosque TOTAL DEPTH 25'
TYPE/DIAMETER OF BORING Hollow Stem Rig - 6.5" outside diameter auger ELEVATION N/A
DATE(S) 9/14/09 MONITORING WELL INSTALLED? NO HAMMER WEIGHT (LBS.) 140 DROP HEIGHT (IN.) 30
LOCATION Pasadena, CA (N34° 9' 49.86"; W118° 5' 13.95")

Note: This log presents observations and interpretations that are valid only for the specific date and location of the boring. Subsurface conditions may change over time and with more detailed observations and data as well as by the dynamics and mechanics of the boring. Subsurface conditions may between borings and with time. Material descriptions are derived using visual classification methods and may vary from analytical/mechanical classification based on laboratory testing.

USCS	Laboratory Testing: In-situ γ_d (pcf)	In-situ MC (%)	Sieve % Passing No. 4	Sieve % Passing No. 200	Depth (feet)	Field Data: Blows per 6 in.	Sample No.	Blow Count (Corr. N-Value)	Interpretations: Attitudes, Comments: PID - PPM	Graphic Log	LITHOLOGIC DESCRIPTION
SP					0–1						Poorly Graded Sand with Gravel, loose, dry, light brown
					5–6	1R		3 8 9			
					7–8		2B		MD		
	122.8	1.1			10–11	3R		5 9 14	DS		
					12–14						@ 12', Some gravel up to 3" in diameter
					15–16	4R		27 32 29			@ 15', Blow count not representative of loose soil because of gravel stuck in sampler
					20–21			50 50/5"	Invert Depth		@ 20', Blow count not representative of loose soil because of gravel stuck in sampler

SUMMARY LOG OF BORING B4

Geotechnical and Materials Engineering Division - Los Angeles County Department of Public Works

PROJECT Eaton Wash Spridg. Grounds Improv. CLIENT DESIGN DIVISION PAGE 1 OF 1
PROJECT ID FCC0001153 DRILLER LACDPW LOGGED BY Erick Del Bosque TOTAL DEPTH 25'
TYPE/DIAMETER OF BORING Hollow Stem Rig - 6.5" outside diameter auger ELEVATION N/A
DATE(S) 9/14/09 MONITORING WELL INSTALLED? NO HAMMER WEIGHT (LBS.) 140 DROP HEIGHT (IN.) 30
LOCATION Pasadena, CA (N34° 9' 51.21"; W118° 5' 15.96")

Note: This log presents observations and interpretations that are valid only for the specific date and location of the boring. Subsurface conditions may change over time and with more detailed observations and data as well as by the dynamics and mechanics of the boring. Subsurface conditions may between borings and with time. Material descriptions are derived using visual classification methods and may vary from analytical/mechanical classification based on laboratory testing.

USCS	Laboratory Testing: In-situ γ_d (pcf)	In-situ MC (%)	Sieve % Passing No. 4	Sieve % Passing No. 200	Depth (feet)	Field Data: Blows per 6 in.	Sample No.	Blow Count (Corr. N-Value)	Interpretations: Attitudes, Comments: PID - PPM	Graphic Log	LITHOLOGIC DESCRIPTION
					0–1						3" AC with ~ 5" CMB
SP SM					1–4						Poorly Graded Sand with Silt, loose, moist, brown, trace gravel
	116.7	5.4			5–6	1R		6 7 11	SE		
					7–8		2B				
SP					10–11	3R		7 12 15			Poorly Graded Sand with Gravel, medium dense, moist, brown
	118.3	7.1			15–16	4R		7 9 7	DS		@ 15', Decrease to loose @ 17', Gravel content increases
					20–21				Invert Depth		
GP					21–25						Poorly Graded Gravel with Sand, loose, moist, gray

DATE	MK	DESCRIPTION

REVISIONS

REGISTERED PROFESSIONAL ENGINEER
Brian D. Smith
NO. 69541
EXP. 6/30/10
CIVIL
STATE OF CALIFORNIA

PROJECT ENGINEER 9/20/10 DATE

COUNTY OF LOS ANGELES DEPARTMENT OF PUBLIC WORKS

EATON WASH

SPREADING GROUND IMPROVEMENTS

LOG OF BORINGS

PIN FCC0001153 | JOB X5009690 | DWG 24-D77.19 | SHEET 19 OF 19

CADD PROJECT FILE NAME: EATON WASH-3 SH. 19
CHECKER: BRIAN D SMITH
DESIGNER: E. DEL BOSQUE
DRAFTER: E. DEL BOSQUE

DATE: SHIFTES TIME: STIMES FILE: SHEETS

LOG OF BORINGS.dgn 07/28/2010 3:38:14 PM

COUNTY OF LOS ANGELES
DEPARTMENT OF PUBLIC WORKS

PLANS FOR THE ~~HEADWORKS REHABILITATION~~ INLET/OUTLET WORKS REHABILITATION △1

AT

EATON WASH DAM AND RESERVOIR

~~PROJECT ID NO. FCC0001106~~

PROJECT ID NO. FCC0001213 △1

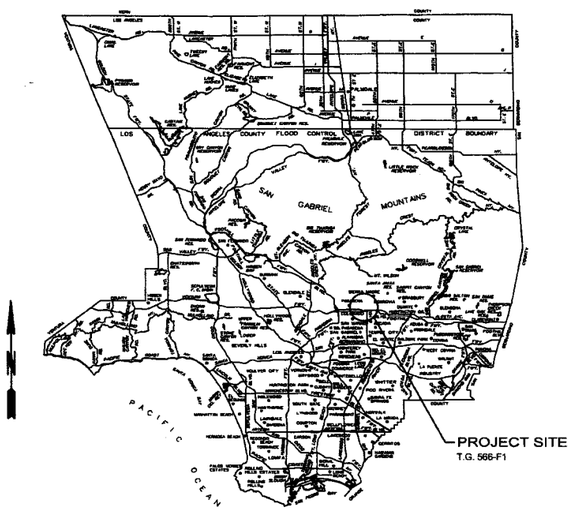

LOCATION MAP

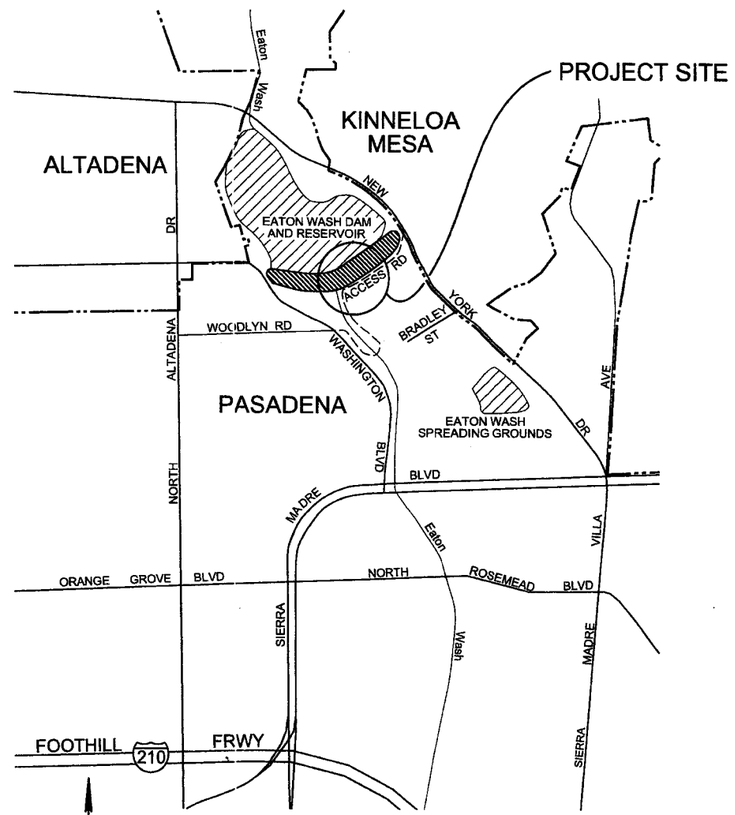

VICINITY MAP

NOT TO SCALE

INDEX TO PLANS

SHEET	TITLE
PLAN H	
1.	TITLE SHEET
2.	GENERAL PLAN AND NOTES
3.	REMOVAL PLAN AND DETAILS
4.	INVERT PLAN AND SECTIONS
5.	WINGWALL DETAILS
6.	RISER WALL ELEVATION AND SECTIONS
7.	RAISED SLAB PLAN AND SECTIONS
8.	CONCRETE OVERLAY PLAN AND RAISED SLAB DETAILS
9.	HORIZONTAL TRASHRACK AND TRENCH COVER PLAN
10.	HORIZONTAL TRASHRACK DETAILS
11.	INCLINED TRASHRACK ELEVATION AND DETAILS
12.	ACTUATOR TRASHRACK PLAN AND DETAILS
13.	LADDER DETAILS AND TRENCH COVER DETAILS
14.	UTILITY TRENCH PLAN AND SECTIONS
15.	CMU BLOCK HOUSE PLAN AND ELEVATIONS
16.	CMU BLOCK HOUSE SECTIONS AND DETAILS
17.	HEADWORKS SEDIMENT REMOVAL PLAN
PLAN M	
18.	GENERAL MECHANICAL PLAN AND ELEVATIONS
19.	MECHANICAL EQUIPMENT LAYOUT
20.	5'Wx7'H CAST-IRON SLIDE GATES AND ACTUATORS DETAILS
21.	HYDRAULIC POWER UNIT AND WATER LEVEL PULL BOX DETAILS
22.	AS-BUILT PLAN FOR GATE AND FRAME ASSEMBLY
23.	AS-BUILT PLAN FOR GATE DETAILS
24.	AS-BUILT PLAN FOR GATE ACCESSORY DETAILS
PLAN E	
25.	HEADWORKS ELECTRICAL INSTALLATIONS
26.	RELIEF QUARTERS-REMOTE CONTROL SYSTEM PLAN VIEW AND ELEVATIONS
27.	RELIEF QUARTERS-REMOTE CONTROL SYSTEM HPU AND GATES DESK CONSOLE
PLAN D	
28.	DOWNSTREAM SLOPE PROTECTION-PLAN AND SECTIONS
29.	DRAINAGE SYSTEM-PLAN AND PROFILE
30.	DOWNSTREAM SLOPE PROTECTION-SECTIONS AND DETAILS
31.	ROAD AC OVERLAY-PLAN AND CROSS SECTIONS
32.	SECURITY GATES -SECTIONS AND DETAILS
33.	DOWNSTREAM SLOPE PROTECTION - PLAN AND CROSS SECTIONS

PROJECT ID FCC0001213
EATON WASH DAM AND RESERVOIR INLET/OUTLET WORKS REHABILITATION
NO REFUND
Bid Package Price: $18.00

DRAFTER S. GREGOWSKE | DESIGNER S. GREGOWSKE | CHECKER KENNETH HO | CADD PROJECT FILE NAME ~~FCC0001106-STRUCTURES (H).dgn~~ △1 FCC0001213-STRUCTURES (H).dgn

TWO DAYS BEFORE YOU DIG
CALL USA TOLL FREE
1-800-227-2600

APPROVED GAIL FARBER DIRECTOR OF PUBLIC WORKS — BY (DEPUTY DIRECTOR) — DATE 1-11-2011
RECOMMENDED — BY (ASSISTANT DEPUTY DIRECTOR, DESIGN) — DATE 1-6-2011
SUBMITTED — BY (STRUCTURES SECTION I) — DATE 1-5-2011

DATE	MK	DESCRIPTION
10/17/11	△1	Revised Project Name and Project ID No.

REVISIONS

REGISTERED PROFESSIONAL ENGINEER — Scott D. Gregowske — NO. C68087 — EXP. 06/30/11 — CIVIL — STATE OF CALIFORNIA
PROJECT ENGINEER — DATE 12/15/10

PLAN H

COUNTY OF LOS ANGELES DEPARTMENT OF PUBLIC WORKS

EATON WASH DAM AND RESERVOIR
~~HEADWORKS REHABILITATION~~
△1 INLET/OUTLET WORKS REHABILITATION

TITLE SHEET

~~FCC0001106~~ | PCA X5009677 | DWG 24A-D65.1 | SHEET 1 OF 33

FCC0001213 △1

TB-DB 11/08

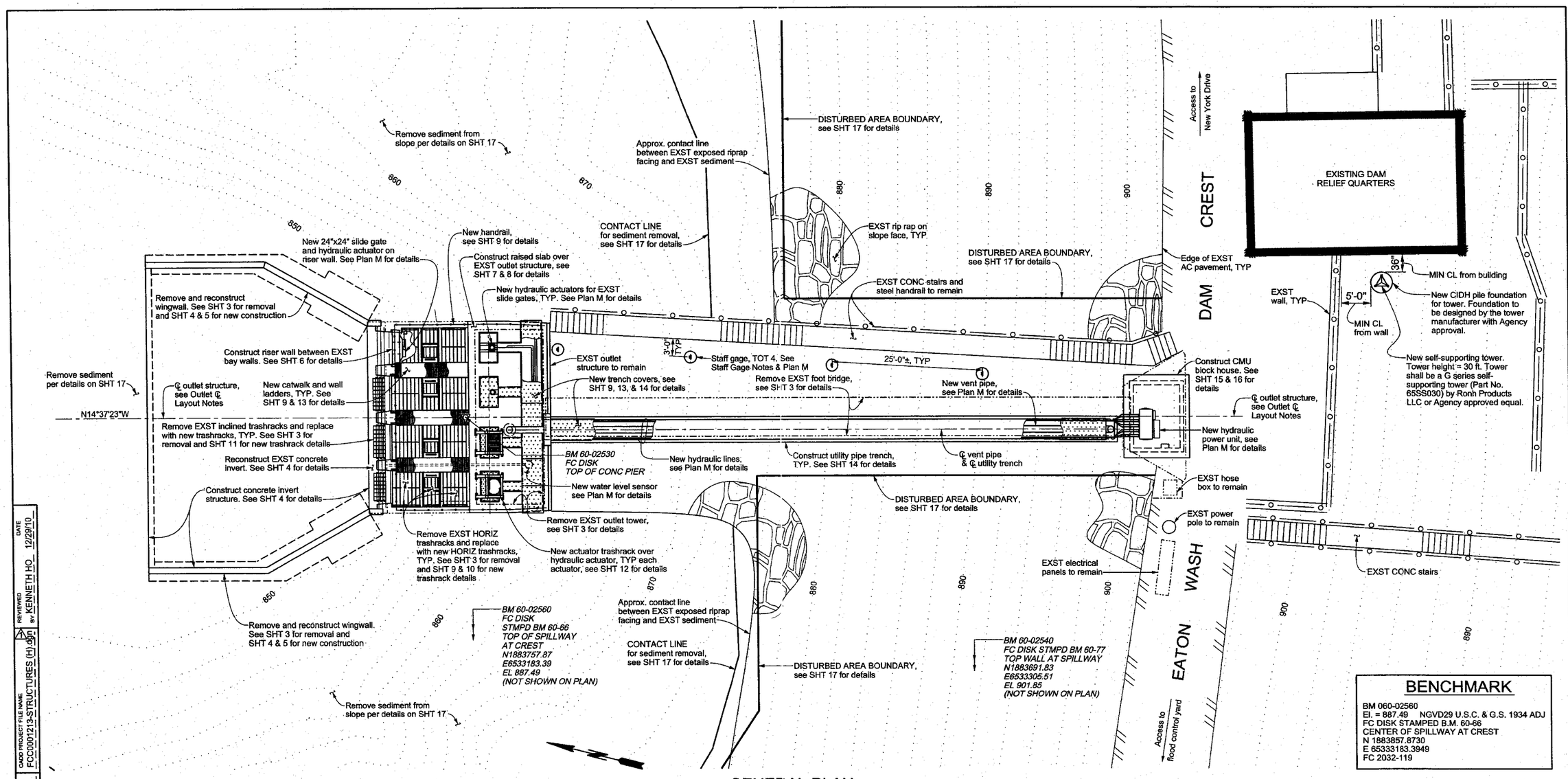

GENERAL PLAN

Scale ¼" = 1'-0"

BENCHMARK

BM 060-02560
El. = 887.49 NGVD29 U.S.C. & G.S. 1934 ADJ
FC DISK STAMPED B.M. 60-66
CENTER OF SPILLWAY AT CREST
N 1883857.8730
E 65333183.3949
FC 2032-119

GENERAL NOTES

DESIGN:

American Concrete Institute: Building Code Requirements For Structural Concrete (ACI 318-08) and Commentaries (ACI 318R-08)

Los Angeles County Flood Control District Structural Design Manual, Dated April 1982

American Institute of Steel Construction, Inc.: Manual of Steel Construction Load and Resistance Factor Design (LRFD) Third Edition

DESIGN STRESSES:

Concrete:	f'c = 4,000 psi
Reinforcing Steel (A706):	fy = 60,000 psi
Structural Steel	
Structural shapes, plates, & bars (A36):	fy = 36,000 psi
Structural Tubing (A500, Grade B):	fy = 46,000 psi
Welding Structural Steel (AWS D1.1):	Electrodes - Fu = 70 ksi MIN

DESIGN LOAD:

Riser wall:

Hydrostatic Fluid Pressure:	62.4 pcf
Silt Fluid Pressure:	85.0 pcf

Wingwalls:

Active E.F.P.:	36.0 pcf
Surcharge:	72.0 psf

CONSTRUCTION: Standard Specifications for Public Works Construction 2009 Edition (Greenbook).

PRIME CONTRACTOR LICENSE REQURIED: CLASS A

REFERENCES

Description:	Drawing Numbers:
Existing Headworks Plans:	PF529326 PF529337 PF529341 to PF529346 PF529350 to PF529357 PD003945

OUTLET ℄ LAYOUT NOTES

1. ℄ Outlet Structure shall be established through BM 60-02530, located on top of existing outlet structure, at center pier, 1 ft. north of tower column.
2. The bearing of ℄ Outlet Structure, taken through BM 60-02530, shall be verified to run through the center of the existing outlet structure.
3. With approval from the Engineer, adjustments shall be made to the layout of the ℄ Outlet Structure, so that the line best fits the center of the outlet structure based on existing field dimensions.

STAFF GAGE NOTES

1. See Plan M for details of the staff gages.
2. The staff gages shall be installed 3'-0" from the edge of the existing concrete stairs. The staff gages shall be installed along the slope in increments of 10 vertical feet, and approximately 25 horizontal feet apart.
3. Prior to installing the staff gages, the Contractor shall temporarily setup the staff gages in the proposed installation locations. The Engineer shall verify the visibilty of the staff gages, and shall modify the final staff gage locations as needed.

THE CONTRACTOR SHALL VERIFY ALL CONTROLLING FIELD DIMENSIONS BEFORE ORDERING OR FABRICATING ANY MATERIAL.

PLAN H

DATE	MK	DESCRIPTION
10/17/11	1	Revised Project Name and Project ID No.

REVISIONS

REGISTERED PROFESSIONAL ENGINEER Scott D. Gregowske NO. C58087 EXP. 06/30/11 CIVIL STATE OF CALIFORNIA

PROJECT ENGINEER 12/15/10 DATE

COUNTY OF LOS ANGELES DEPARTMENT OF PUBLIC WORKS

EATON WASH DAM AND RESERVOIR

1 INLET/OUTLET WORKS REHABILITATION

GENERAL PLAN AND NOTES

FCC0001213 | 1 | PCA X5009677 | DWG 24A-D65.2 | SHEET 2 OF 33

DRAFTER S. GREGOWSKE | DESIGNER S. GREGOWSKE | CHECKER KENNETH HO | CADD PROJECT FILE NAME FCC0001213-STRUCTURES (H).dgn | 1 | REVIEWED BY KENNETH HO | DATE 12/29/10

NOTES:

1. Removal limits are indicated thus: ▨
2. The existing paint system on structural steel contains lead based paint. The Contractor shall refer to the Special Provisions for requirements regarding lead based paint.
3. During removal of the existing outlet tower and existing foot bridge, the Contractor shall protect the existing outlet structure from any damage.
4. The existing metal plaque, labeled "War Department U.S. Engineer Dept. 1936," shall be salvaged from the face of the existing outlet gate house and shall be relinquished to the Agency.

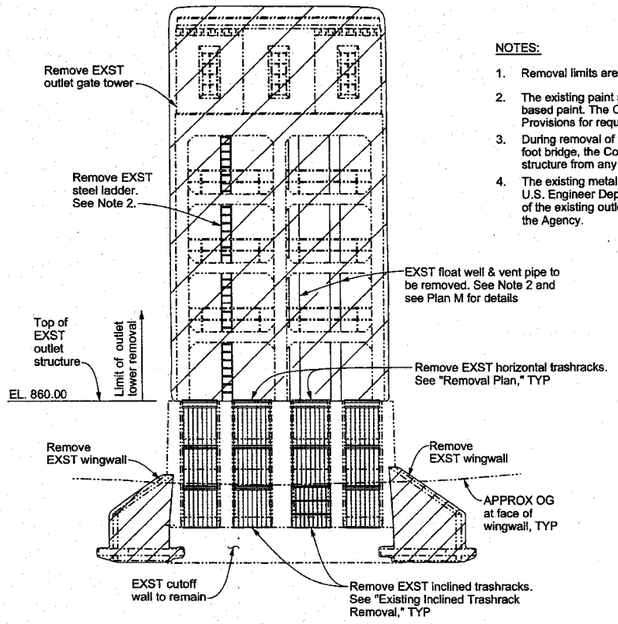

FRONT ELEVATION
EXISTING STRUCTURE REMOVAL

Scale: 1" = 10'

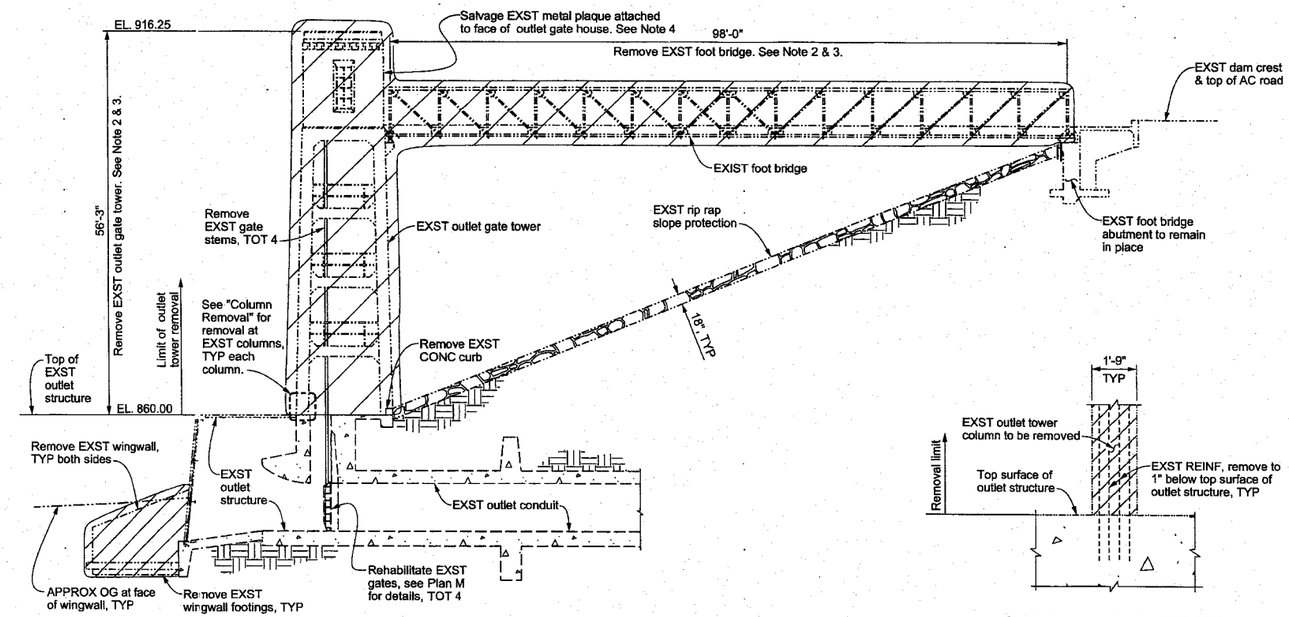

SIDE ELEVATION
EXISTING STRUCTURE REMOVAL

Scale: 1" = 10'

COLUMN REMOVAL

Scale: ⅛" = 1'-0"

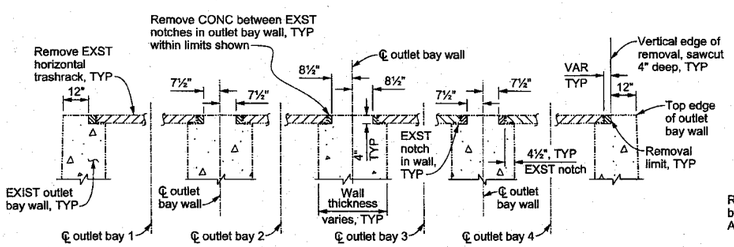

SECTION A1-A1

Scale: ⅜" = 1'-0"

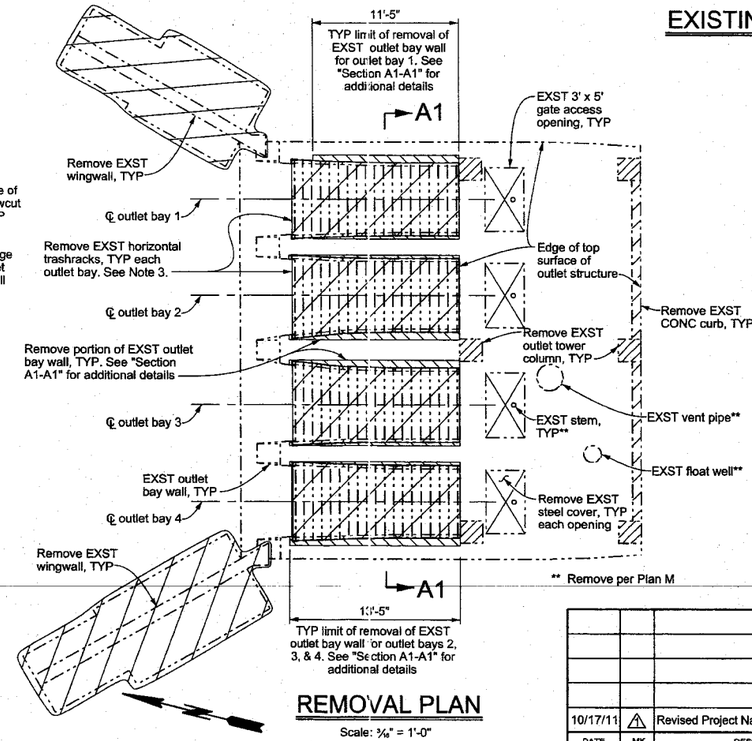

** Remove per Plan M

REMOVAL PLAN

Scale: ⅜" = 1'-0"

Note: Existing inclined trashracks not shown for clarity.

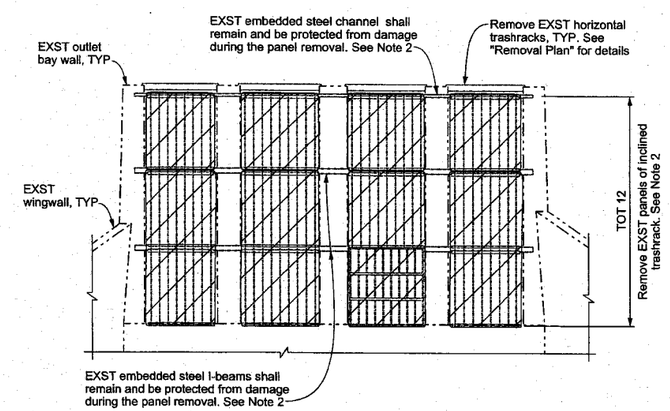

EXISTING INCLINED TRASHRACK REMOVAL

Scale: ⅛" = 1'-0"

THE CONTRACTOR SHALL VERIFY ALL CONTROLLING FIELD DIMENSIONS BEFORE ORDERING OR FABRICATING ANY MATERIAL.

DATE	MK	DESCRIPTION
10/17/11	1	Revised Project Name and Project ID No.

REVISIONS

REGISTERED PROFESSIONAL ENGINEER — Scott D. Gregowske — NO. C88087 — EXP. 06/30/11 — CIVIL — STATE OF CALIFORNIA

PROJECT ENGINEER — DATE 12/15/10

COUNTY OF LOS ANGELES DEPARTMENT OF PUBLIC WORKS

EATON WASH DAM AND RESERVOIR
1 INLET/OUTLET WORKS REHABILITATION

REMOVAL PLAN AND DETAILS

PLAN H

FCC0001213 | 1 | PCA X5009677 | DWG 24A-D65.3 | SHEET 3 OF 33

DRAFTER S. GREGOWSKE | DESIGNER S. GREGOWSKE | CHECKER KENNETH HO | OADD PROJECT FILE NAME FCC0001213-STRUCTURES (H).dgn | REVIEWED BY KENNETH HO | DATE 12/29/10

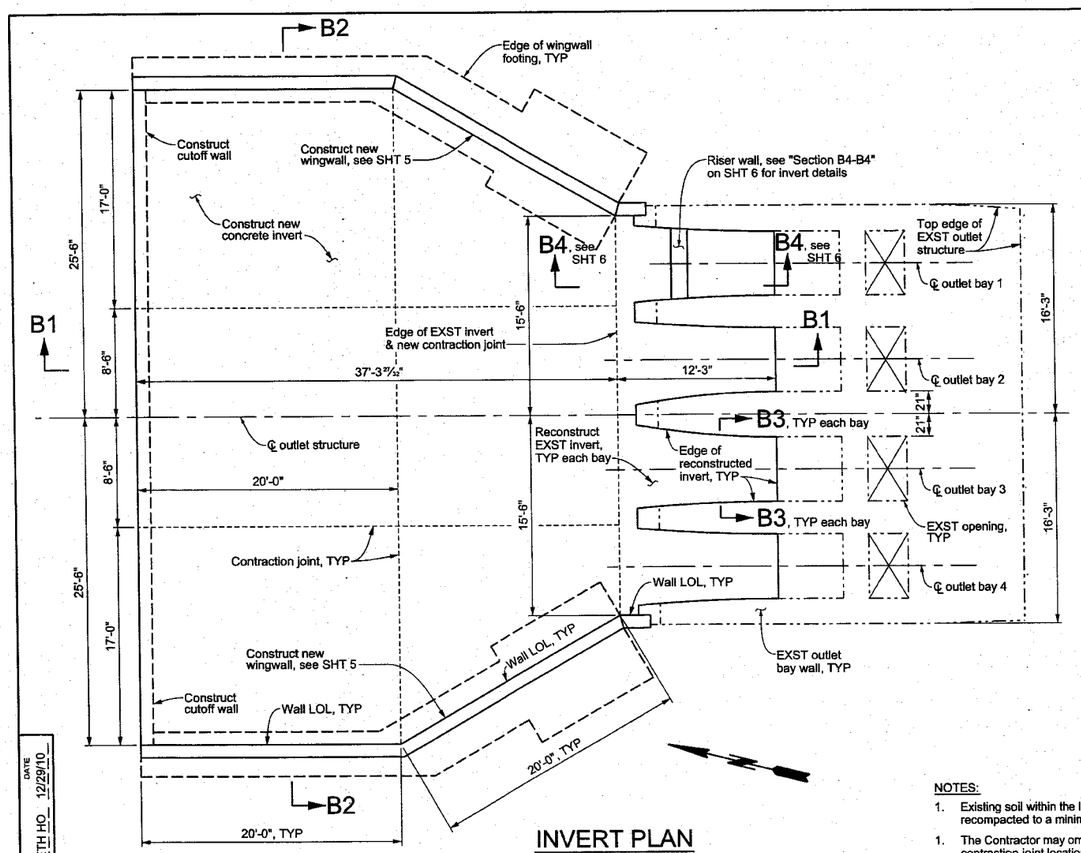

INVERT PLAN

Scale: 3/16" = 1'-0"

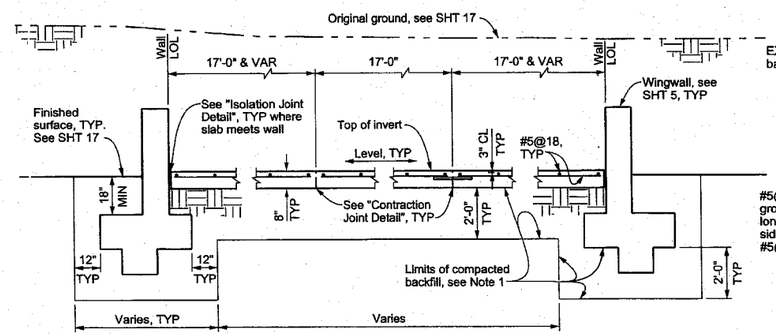

SECTION B2-B2

Scale: 3/8" = 1'-0"

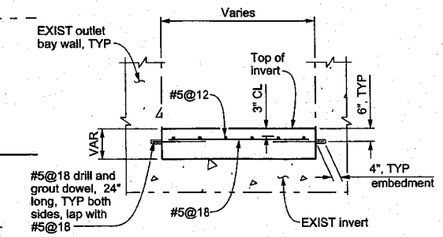

SECTION B3-B3

Scale: 3/8" = 1'-0"

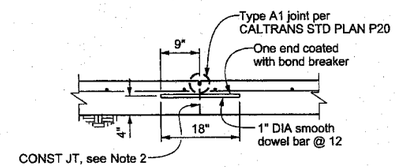

CONTRACTION JOINT DETAIL

Not to Scale

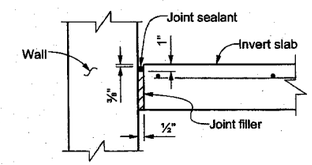

ISOLATION JOINT DETAIL

Not to Scale

NOTES:

1. Existing soil within the limits shown, shall be removed and recompacted to a minimum of 93% compaction.
1. The Contractor may omit the construction joints at the contraction joint locations when approved by the Engineer.

LIQUID SEALANT RESERVOIR DEPTH

LIQUID SEALANT MATERIAL	3/8" Joint Width Type A1	
	DIMENSION	
	a	b
SILCONE	1" ±1/16"	5/8" ±1/16"
ASPHALT RUBBER	1 3/16" ±1/16"	3/4" ±1/16"

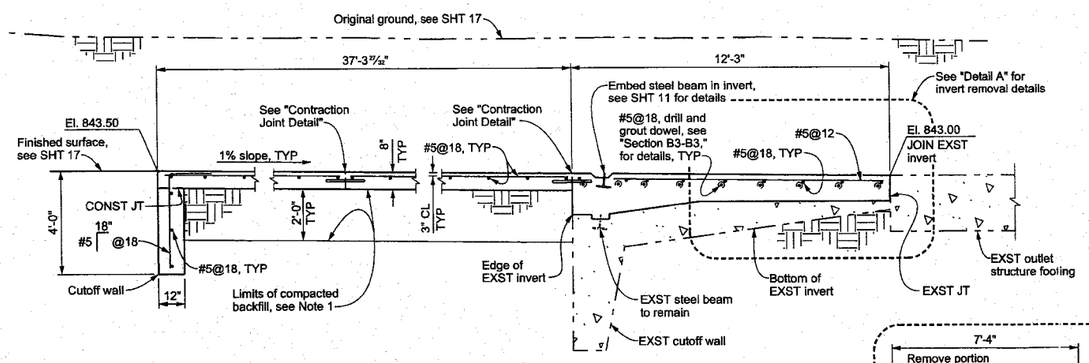

SECTION B1-B1

Scale: 3/8" = 1'-0"

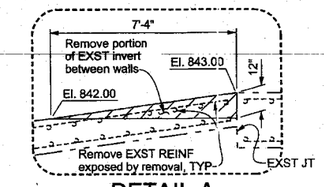

DETAIL A

Scale: 3/8" = 1'-0"

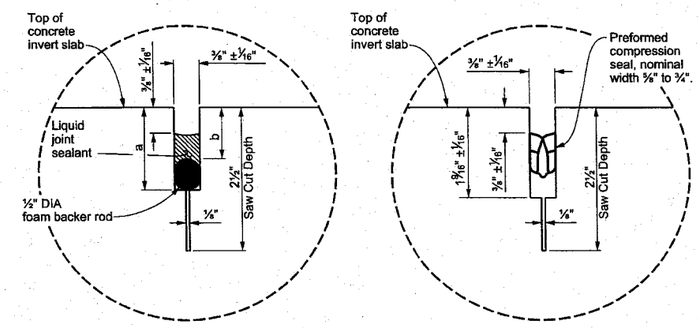

LIQUID SEALANT

COMPRESSION SEAL

TYPE A1 JOINT DETAIL

Not to Scale

Note: Tie bars, dowel bars, and reinforcement are not shown in joint seal details.

THE CONTRACTOR SHALL VERIFY ALL CONTROLLING FIELD DIMENSIONS BEFORE ORDERING OR FABRICATING ANY MATERIAL.

DATE	MK	DESCRIPTION
10/17/11	1	Revised Project Name and Project ID No.

REVISIONS

REGISTERED PROFESSIONAL ENGINEER Scott D. Gregowske NO. C68087 EXP. 09/30/11 CIVIL STATE OF CALIFORNIA

PROJECT ENGINEER 12/15/10 DATE

PLAN H

COUNTY OF LOS ANGELES DEPARTMENT OF PUBLIC WORKS

EATON WASH DAM AND RESERVOIR

1 INLET/OUTLET WORKS REHABILITATION

INVERT PLAN AND SECTIONS

FCC0001213 | 1 | PCA X5009677 | DWG 24A-D65.4 | SHEET 4 OF 33

DRAFTER S. GREGOWSKE | DESIGNER S. GREGOWSKE | CHECKER KENNETH HO | CADD PROJECT FILE NAME FCC0001213-STRUCTURES (H).dgn | REVIEWED BY KENNETH HO | DATE 12/29/10

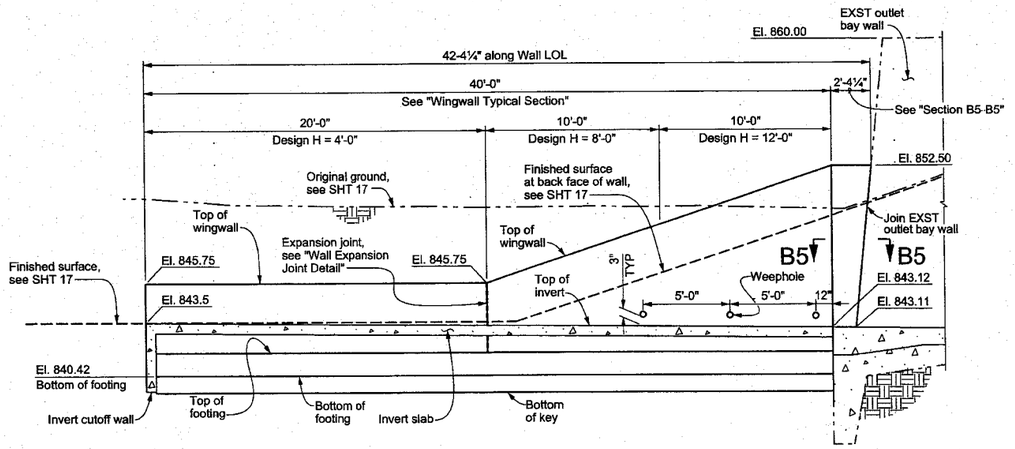

TYPICAL WALL PROFILE

Scale: ¼" = 1'-0"

Note: Profile for east wall shown, west wall is similiar

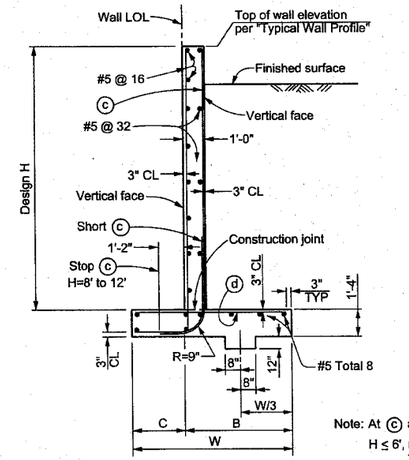

WINGWALL TYPICAL SECTION

Not to Scale

Note: At ⓒ and Short ⓒ bars:
H ≤ 6', no splices are allowed within 1'-8" above the top of footing.
H > 6', no splices are allowed within H/4 above the top of footing.

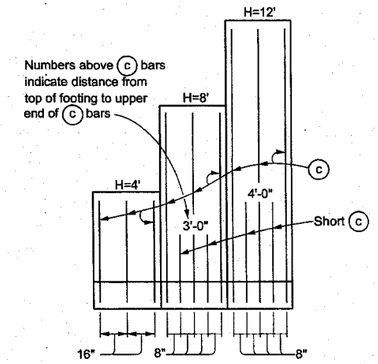

ELEVATION

Not to Scale

TABLE OF REINFORCING STEEL, DIMENSIONS AND DATA			
Design H	4'	8'	12'
W	3'-6"	5'-2"	8'-6"
C	1'-0"	1'-8"	3'-0"
B	2'-6"	3'-6"	5'-6"
ⓒ bars	#5 @ 16	#5 @ 8	#9 @ 8
ⓓ bars	#5 @ 16	#5 @ 16	#6 @ 8

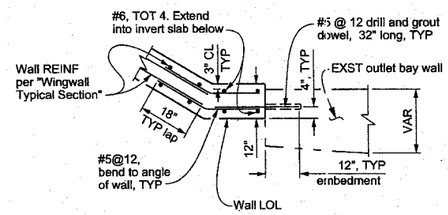

SECTION B5-B5

Scale: ¾" = 1'-0"

Weephole Notes:

A. Weephole spacing shall be as indicated on "Typical Wall Profile." Exposed wall drains shall be located 3"± above top of invert slab.

B. All pipe shall be 4" DIA (NPS) Schedule 40 PVC pipe.

C. Perforated pipe shall be continuous between weephole locations. Where no additional weepholes are located adjacent to a weephole, the open end of the perforated pipe shall be capped.

D. All weepholes shall have a plastic floor drain installed to block sediment intrusion. Drain shall be installed inside of the weephole pipe, and face of drain shall be flush with the front face of the wall.

E. Surround perforated pipe with a minimum of one cubic foot of 1" crushed rock for each linear foot of pipe. The crushed rock shall wrapped in a nonwoven filter fabric, securely tied.

F. Pervious backfill material continuous behind retaining wall.

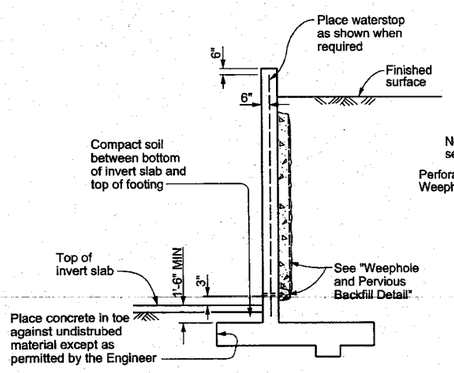

WINGWALL DRAINAGE

Not to Scale

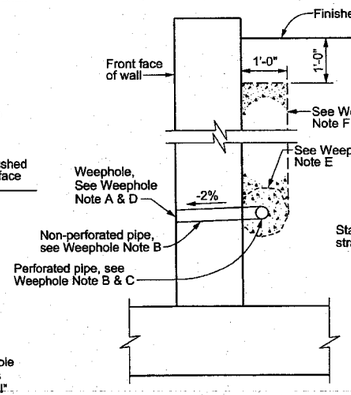

SECTION

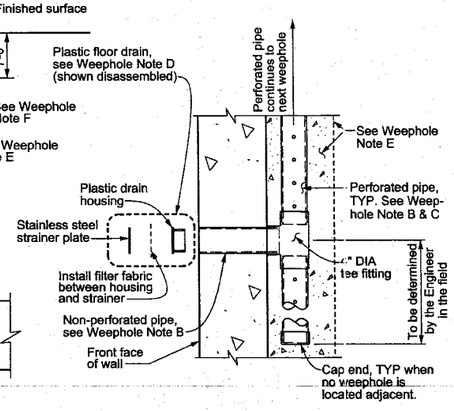

TOP ELEVATION

WEEPHOLE AND PERVIOUS BACKFILL DETAIL

Not to Scale

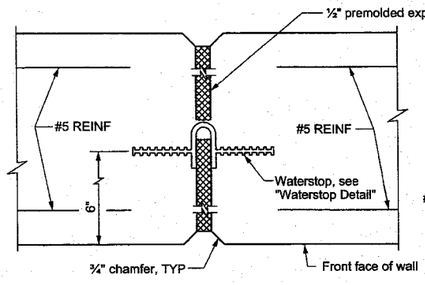

WALL EXPANSION JOINT DETAIL

Not to Scale

Note: Section through wall at expansion joint shown

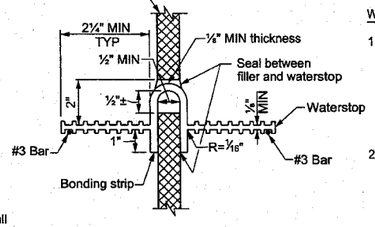

WATERSTOP DETAIL

Not to Scale

Waterstop Notes:

1. Holes will be permitted in the outer ½" of the web for wire, rings, etc. Tie web to #3 reinforcing bars @ 12 maximum intervals to support the waterstop in proper position during concrete placement. Alternative detail may be submitted for approval of the Engineer.
2. Waterstop to have 5 or more pairs of of raised ribs to provide 0.1 square inches minimum rib cross-section area on each half of the waterstop.

THE CONTRACTOR SHALL VERIFY ALL CONTROLLING FIELD DIMENSIONS BEFORE ORDERING OR FABRICATING ANY MATERIAL.

DATE	MK	DESCRIPTION
10/17/11	⚠	Revised Project Name and Project ID No.

REVISIONS

REGISTERED PROFESSIONAL ENGINEER Scott D. Gregowske NO. C88087 EXP. 06/30/11 CIVIL STATE OF CALIFORNIA

PROJECT ENGINEER 01/19/11 DATE

COUNTY OF LOS ANGELES DEPARTMENT OF PUBLIC WORKS

EATON WASH DAM AND RESERVOIR

⚠INLET/OUTLET WORKS REHABILITATION

WINGWALL DETAILS

PLAN H

FCC0001213 ⚠ PCA X5009677 DWG 24A-D65.5 SHEET 5 OF 33

DRAFTER S. GREGOWSKE | DESIGNER S. GREGOWSKE | CHECKER KENNETH HO | CADD PROJECT FILE NAME FCC0001213-STRUCTURES (H).dgn | REVIEWED BY KENNETH HO | DATE 12/29/10

DATE. $DATE$ TIME. $TIME$ FILE. $FILE$

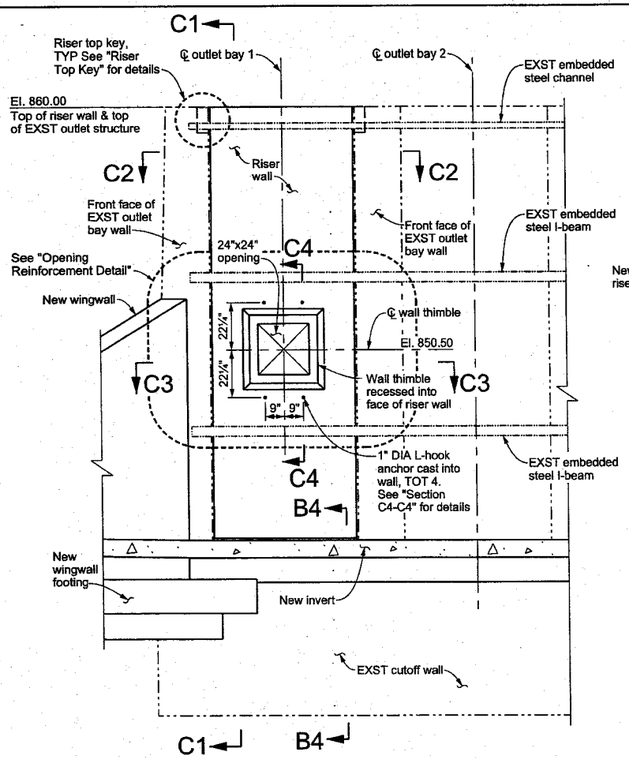

RISER WALL FRONT ELEVATION

Scale: ¾" = 1'-0"

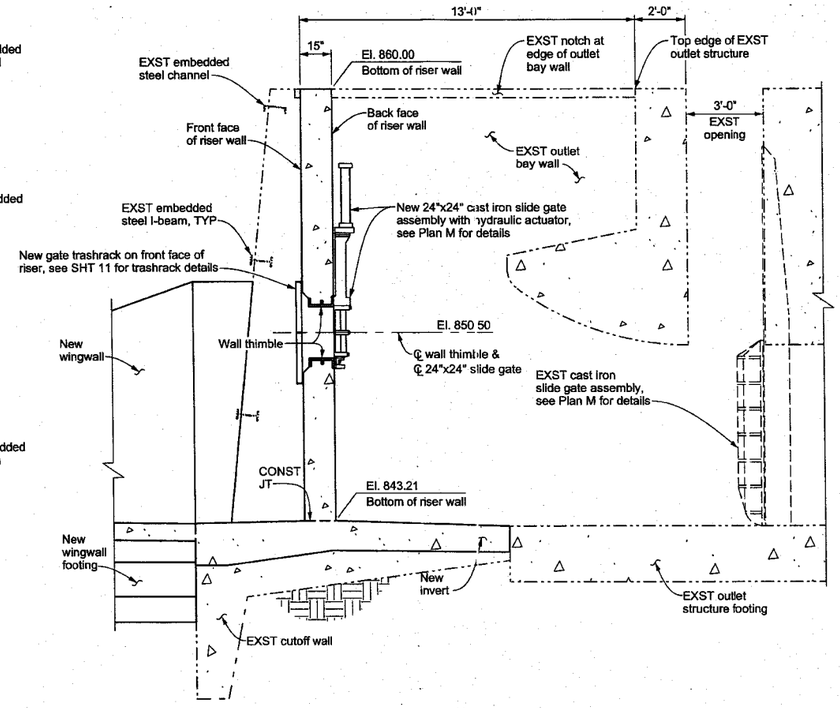

SECTION C1-C1

Scale: ¾" = 1'-0"

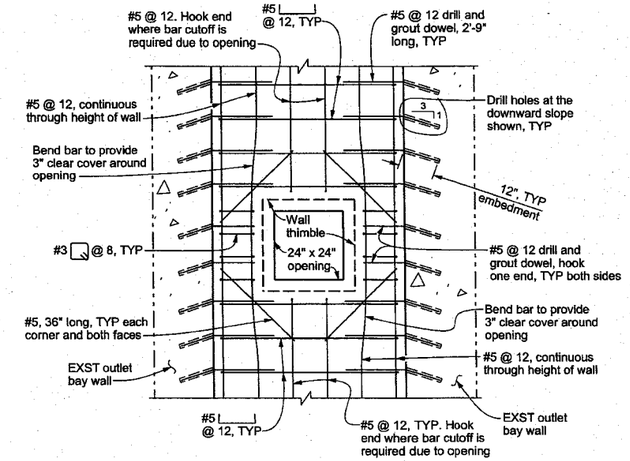

OPENING REINFORCEMENT DETAIL

Scale: ½" = 1'-0"

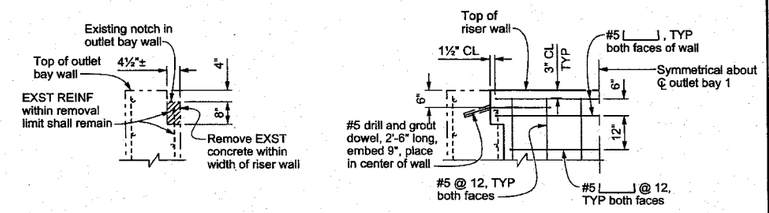

REMOVAL

NEW CONSTRUCTION

RISER TOP KEY DETAIL

Scale: ½" = 1'-0"

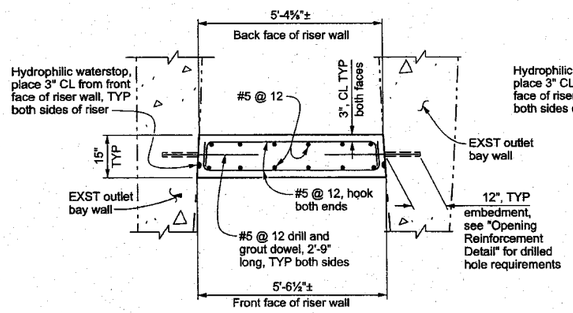

SECTION C2-C2

Scale: ½" = 1'-0"

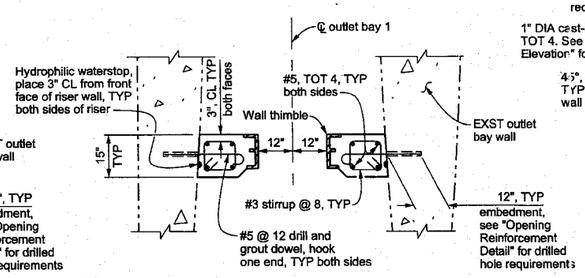

SECTION C3-C3

Scale: ½" = 1'-0"

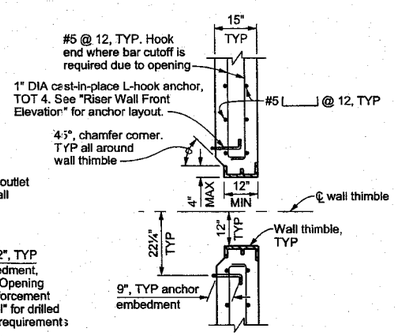

SECTION C4-C4

Scale: ½" = 1'-0"

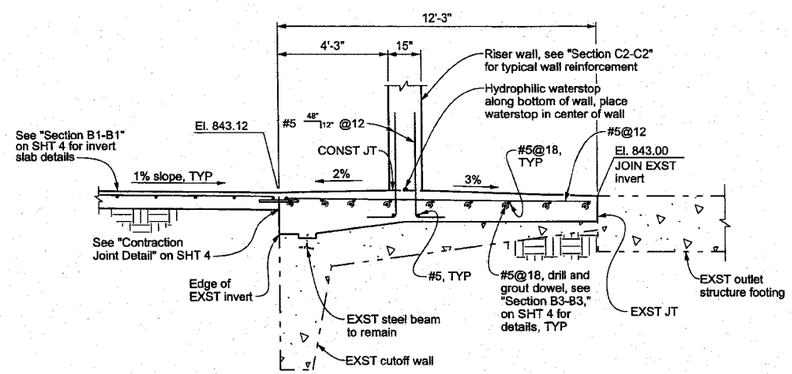

SECTION B4-B4

Scale: ¾" = 1'-0"

NOTES:

1. L-hook anchors shall be 304 stainless steel with 304 SS nut and washer.

THE CONTRACTOR SHALL VERIFY ALL CONTROLLING FIELD DIMENSIONS BEFORE ORDERING OR FABRICATING ANY MATERIAL.

DATE	MK	DESCRIPTION
10/17/11	1	Revised Project Name and Project ID No.

REVISIONS

REGISTERED PROFESSIONAL ENGINEER — Scott D. Gregowske — NO. C68087 — EXP. 06/30/11 — CIVIL — STATE OF CALIFORNIA

PROJECT ENGINEER 12/15/10 DATE

PLAN H

COUNTY OF LOS ANGELES DEPARTMENT OF PUBLIC WORKS

EATON WASH DAM AND RESERVOIR

1 INLET/OUTLET WORKS REHABILITATION

RISER WALL ELEVATION AND SECTIONS

FCC0001213 | 1 | PCA X5009677 | DWG 24A-D65.6 | SHEET 6 OF 33

DRAFTER S. GREGOWSKE | DESIGNER S. GREGOWSKE | CHECKER KENNETH HO | CADD PROJECT FILE NAME FCC0001213-STRUCTURES (H).dgn | 1 REVIEWED BY KENNETH HO DATE 12/29/10

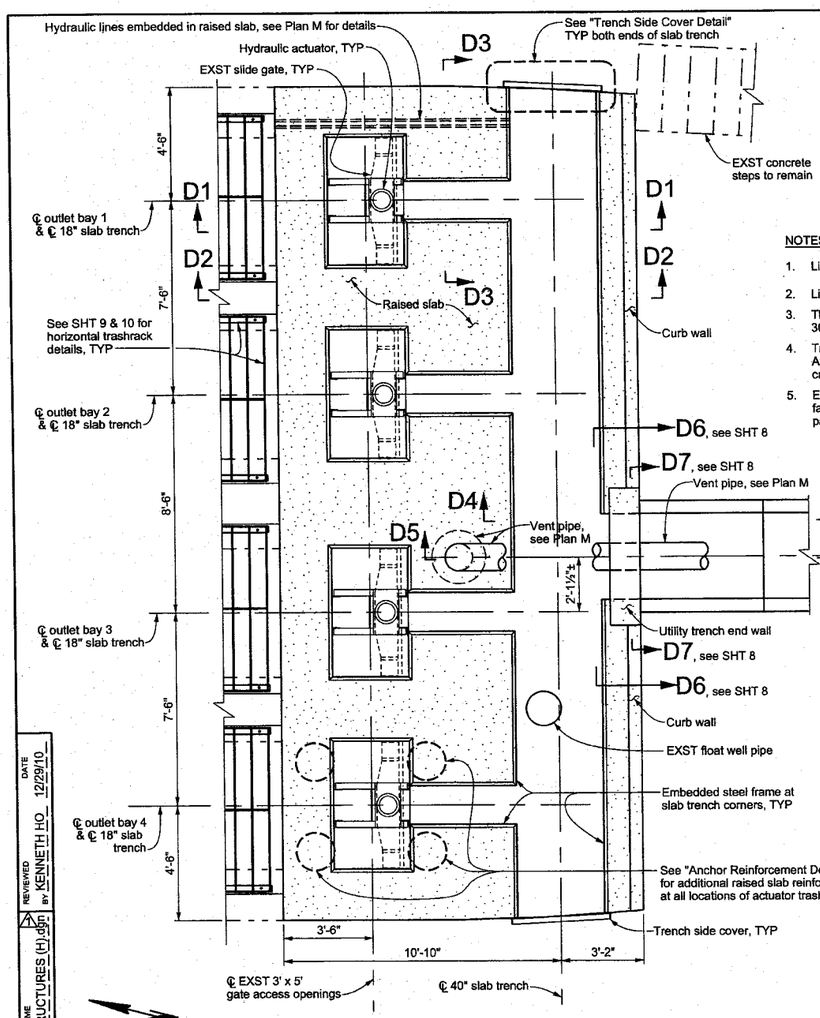

RAISED SLAB PLAN

Scale: ⅜" = 1'-0"

NOTES:

1. Limits of raised slab are indicated on plan view thus:
2. Limits of concrete overlay are indicated on section view thus:
3. Threaded anchor rods shall be 304 stainless steel with 304 SS nut and washer.
4. Trench side cover shall be hot-dip galvanized after fabrication. After galvanization, the trench side cover shall be shop painted to create a duplex corrosion protection system.
5. Embedded steel frame shall be hot-dip galvanized after fabrication. After galvanization, embedded frame shall be shop painted to create a duplex corrosion protection system.

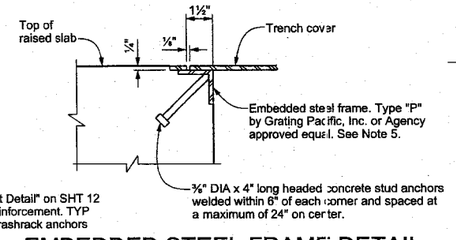

EMBEDDED STEEL FRAME DETAIL

Scale: 3" = 1'-0"

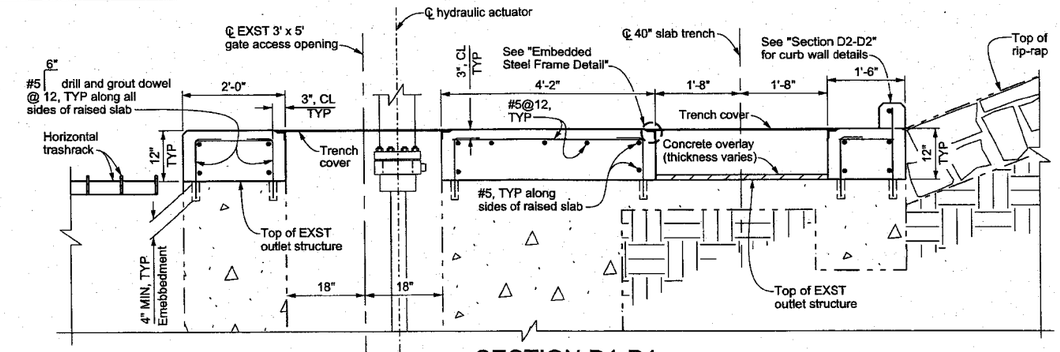

SECTION D1-D1

Scale: ¾" = 1'-0"

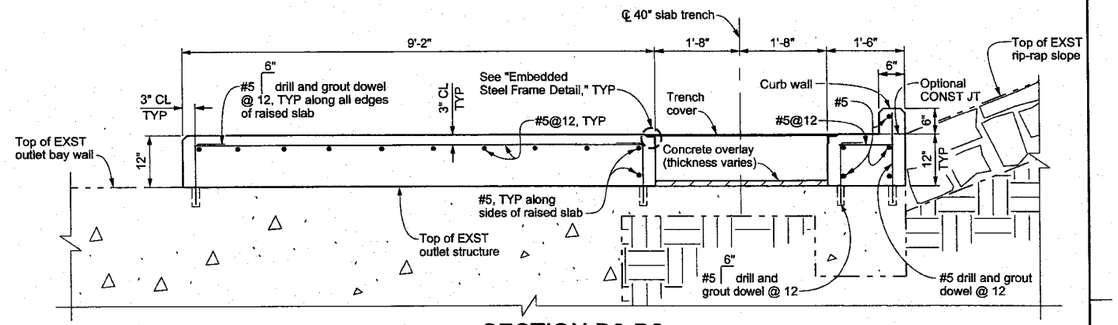

SECTION D2-D2

Scale: ¾" = 1'-0"

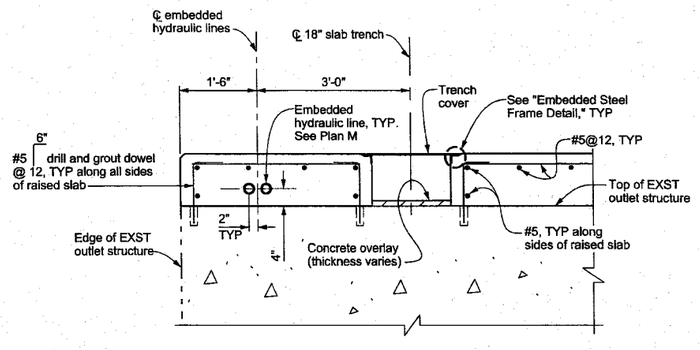

SECTION D3-D3

Scale: ¾" = 1'-0"

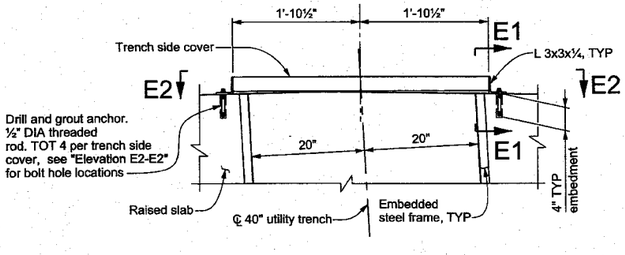

TRENCH SIDE COVER DETAIL

Scale: 1" = 1'-0"

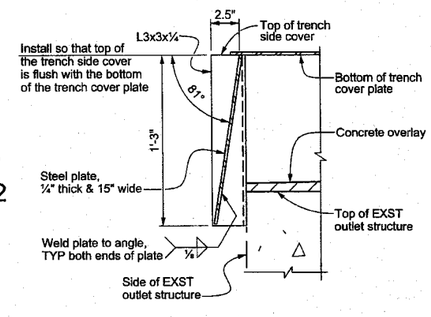

SECTION E1-E1

Scale: 2" = 1'-0"

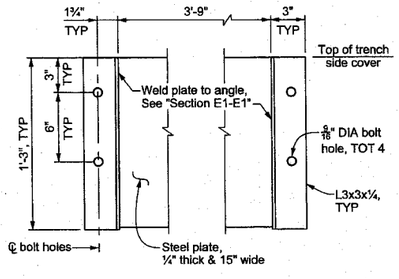

ELEVATION E2-E2

Scale: 2" = 1'-0"

THE CONTRACTOR SHALL VERIFY ALL CONTROLLING FIELD DIMENSIONS BEFORE ORDERING OR FABRICATING ANY MATERIAL.

DATE	MK	DESCRIPTION
10/17/11	1	Revised Project Name and Project ID No.

REVISIONS

REGISTERED PROFESSIONAL ENGINEER — Scott D. Gregowske — No. C69087 — Exp. 06/30/11 — CIVIL — STATE OF CALIFORNIA

PROJECT ENGINEER — DATE 12/15/10

PLAN H

COUNTY OF LOS ANGELES DEPARTMENT OF PUBLIC WORKS

EATON WASH DAM AND RESERVOIR

1 INLET/OUTLET WORKS REHABILITATION

RAISED SLAB PLAN AND SECTIONS

FCC0001213 | 1 | PCA X5009677 | DWG 24A-D65.7 | SHEET 7 OF 33

DRAFTER S. GREGOWSKE | DESIGNER S. GREGOWSKE | CHECKER KENNETH HO | REVIEWED BY KENNETH HO | DATE 12/29/10

1 CADD PROJECT FILE NAME FCC0001213-STRUCTURES (H).dgn

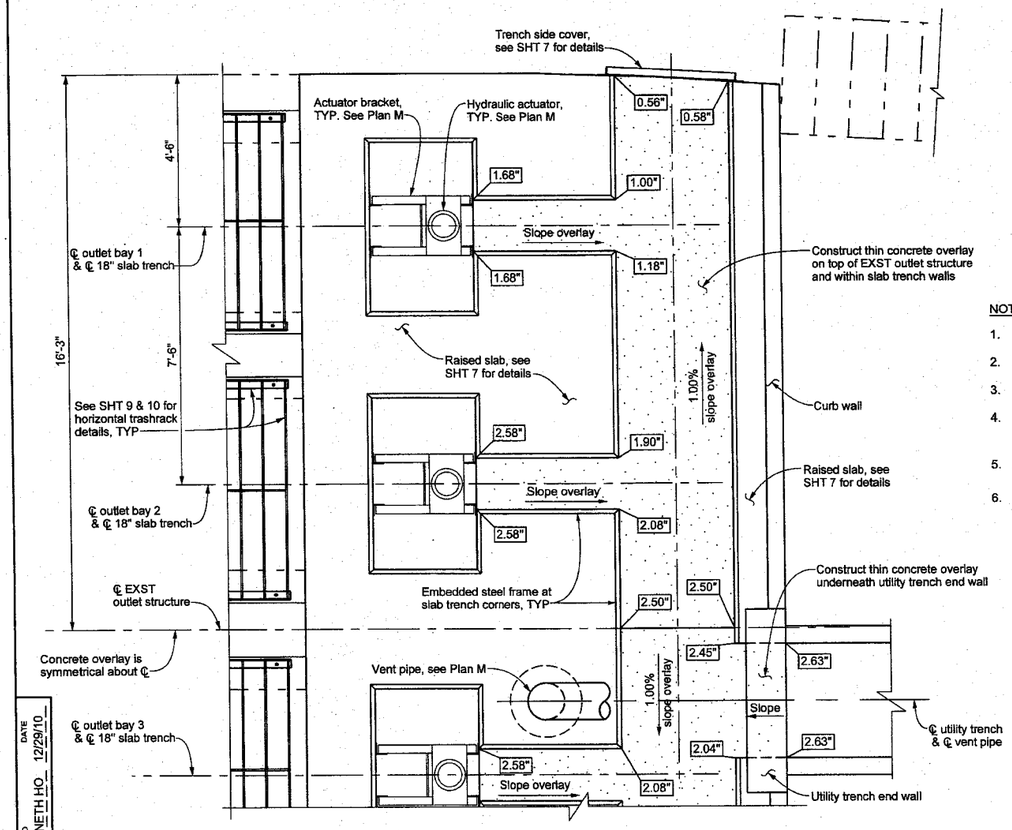

CONCRETE OVERLAY PLAN

Scale: ¾" = 1'-0"

NOTES:

1. Limits of concrete overlay are indicated on plan view thus:
2. Limits of concrete overlay are indicated on section view thus :
3. Thickness of concrete overlay is indicated thus: X.XX"
4. The existing rip rap slope is expected to vary. Contractor shall adjust the dimension of the transion trench, with approval of the Engineer, in order to conform to the existing slope conditions.
5. L-hook anchors shall be 304 stainless steel with 304 SS nut and washer.
6. Angle cover shall be hot-dip galvanized after fabrication. After galvanization, the angle cover shall be shop painted to create a duplex corrosion protection system.

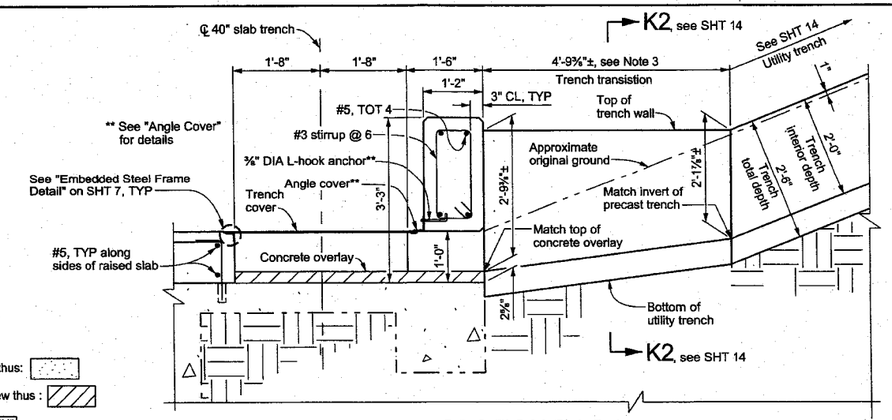

SECTION D4-D4

Scale: ¾" = 1'-0"

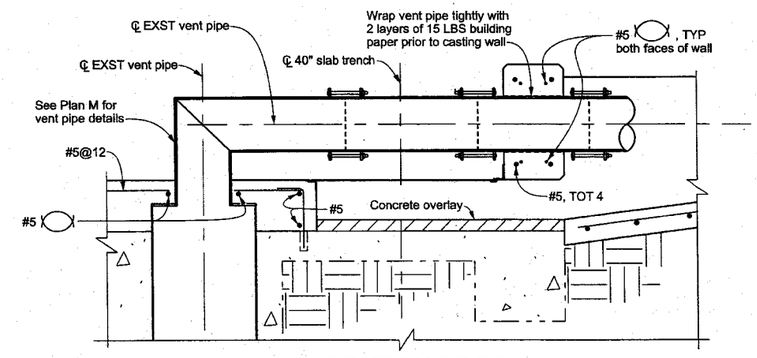

SECTION D5-D5

Scale: ¾" = 1'-0"

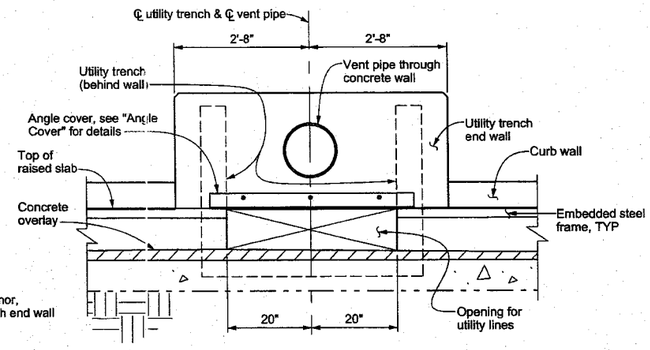

SECTION D6-D6

Scale: ¾" = 1'-0"

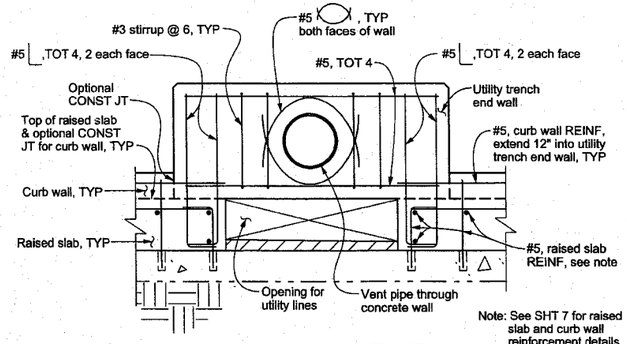

SECTION D7-D7

Scale: ¾" = 1'-0"

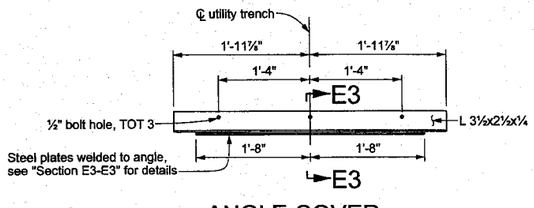

ANGLE COVER

Scale: 1" = 1'-0"

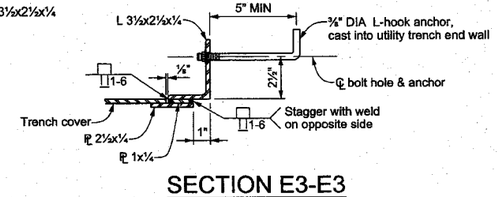

SECTION E3-E3

Scale: 3" = 1'-0"

THE CONTRACTOR SHALL VERIFY ALL CONTROLLING FIELD DIMENSIONS BEFORE ORDERING OR FABRICATING ANY MATERIAL.

DATE	MK	DESCRIPTION
10/17/11	1	Revised Project Name and Project ID No.

REVISIONS

REGISTERED PROFESSIONAL ENGINEER — Scott D. Gregowske — NO. C58087 — EXP. 06/30/11 — CIVIL — STATE OF CALIFORNIA

PROJECT ENGINEER — DATE 12/15/10

PLAN H

COUNTY OF LOS ANGELES DEPARTMENT OF PUBLIC WORKS

EATON WASH DAM AND RESERVOIR

1 INLET/OUTLET WORKS REHABILITATION

CONCRETE OVERLAY PLAN AND RAISED SLAB DETAILS

FCC0001213 | 1 | PCA X5009677 | DWG 24A-D65.8 | SHEET 8 OF 33

DRAFTER S. GREGOWSKE | DESIGNER S. GREGOWSKE | CHECKER KENNETH HO | CADD PROJECT FILE NAME FCC0001213-STRUCTURES (H).dgn | 1 REVIEWED BY KENNETH HO | DATE 12/29/10

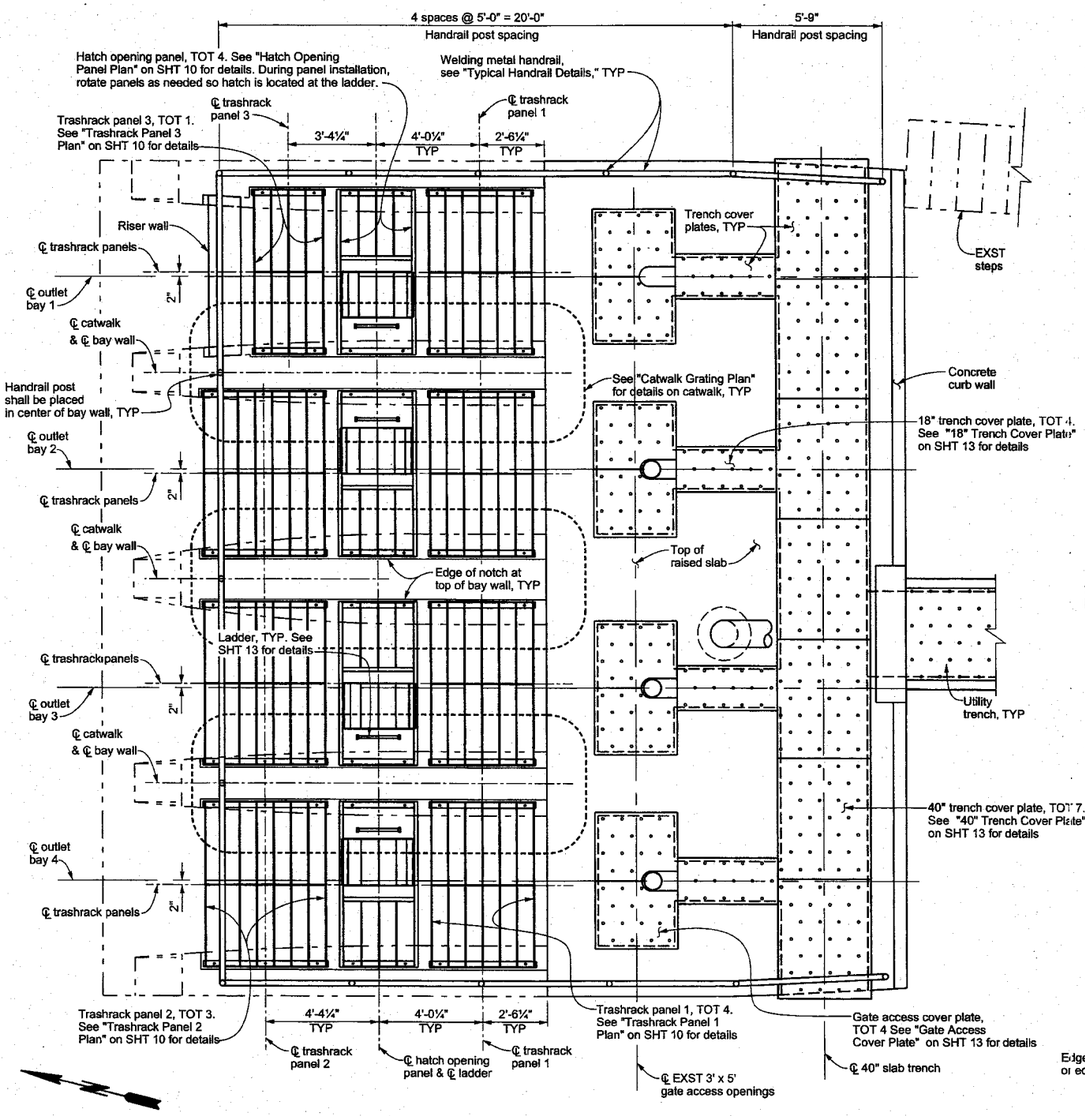

HORIZONTAL TRASHRACK AND TRENCH COVER PLAN

Scale: ¾" = 1'-0"

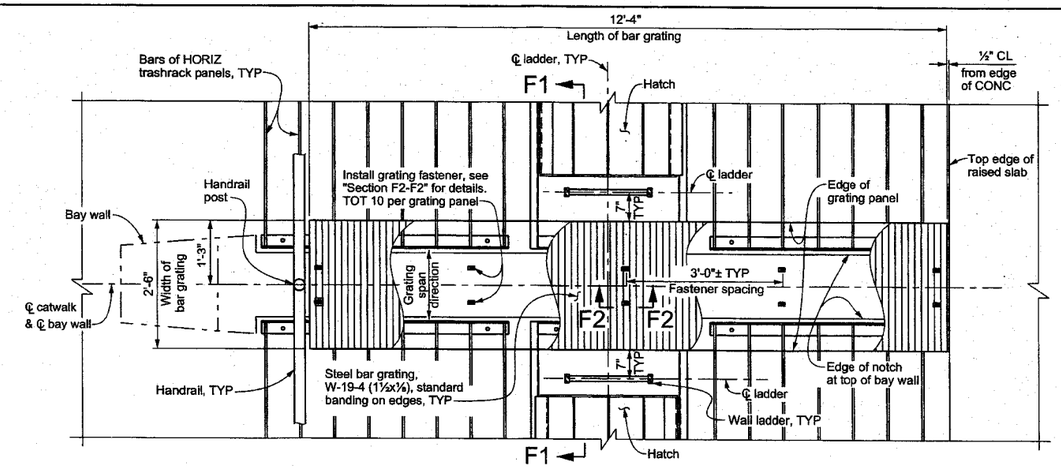

CATWALK GRATING PLAN

Scale: ¾" = 1'-0"

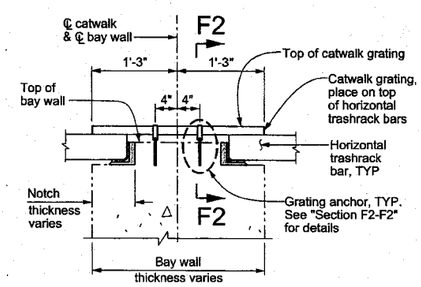

SECTION F1-F1

Scale: ¾" = 1'-0"

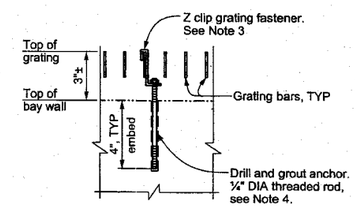

SECTION F2-F2

Scale: 3" = 1'-0"

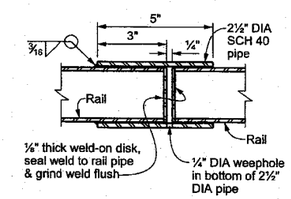

SLIP JOINT DETAIL

Not to Scale

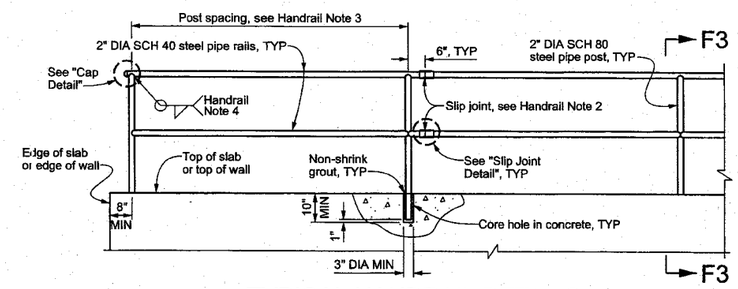

TYPICAL HANDRAIL DETAILS

Scale: ½" = 1'-0"

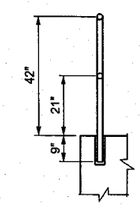

SECTION F3-F3

Scale: ½" = 1'-0"

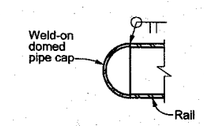

CAP DETAIL

Not to Scale

NOTES:

1. Trench covers are indicated thus:
2. Metal bar grating for the catwalk shall have a serrated top surface and shall be hot-dip galvanized after fabrication.
3. Metal bar grating shall be attached to anchors with Z Clip style grating fasteners. Z Clip fasteners shall have a minimum depth of 2 inches and shall be stainless steel.
4. Threaded anchor rods shall be 304 stainless steel with 304 SS nut and washer.

THE CONTRACTOR SHALL VERIFY ALL CONTROLLING FIELD DIMENSIONS BEFORE ORDERING OR FABRICATING ANY MATERIAL.

HANDRAIL NOTES:

1. All components of the handrail shall be hot-dip galvanized.
2. Slip joints shall be provided at an interval not to exceed 24 ft.
3. Post spacing shall be as indicated on "Horizontal Trashrack And Trench Cover Plan." Maximum spacing of post shall not exceed 8 ft.
4. Welds shall be groove or fillet welds equal to thickness of pipe. Weld all joints all around.
5. All handrail post and rails shall be watertight.

DATE	MK	DESCRIPTION
10/17/11	1	Revised Project Name and Project ID No.

REVISIONS

REGISTERED PROFESSIONAL ENGINEER — Scott D. Gregowske — NO. C68087 — EXP. 06/30/11 — CIVIL — STATE OF CALIFORNIA

PROJECT ENGINEER 12/15/10 DATE

PLAN H

COUNTY OF LOS ANGELES DEPARTMENT OF PUBLIC WORKS

EATON WASH DAM AND RESERVOIR

1 INLET/OUTLET WORKS REHABILITATION

HORIZONTAL TRASHRACK AND TRENCH COVER PLAN

FCC0001213 | 1 | PCA X5009677 | DWG 24A-D65.9 | SHEET 9 OF 33

DRAFTER S. GREGOWSKE | DESIGNER S. GREGOWSKE | CHECKER KENNETH HO | CADD PROJECT FILE NAME FCC0001213-STRUCTURES (H).dgn | REVIEWED BY KENNETH HO | DATE 12/29/10

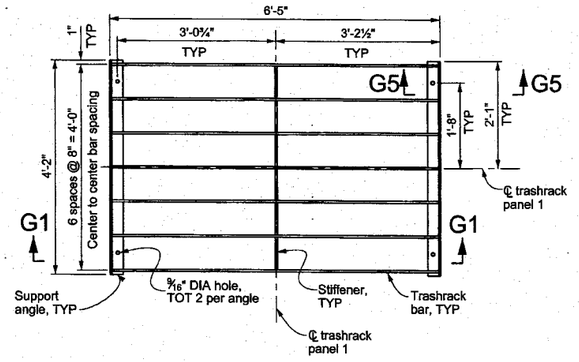

TRASHRACK PANEL 1 PLAN

Scale: ¾" = 1'-0"

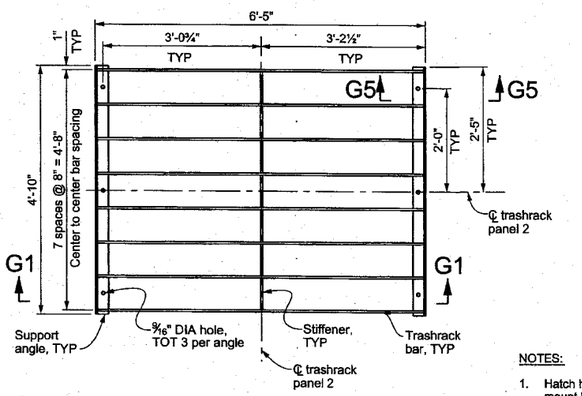

TRASHRACK PANEL 2 PLAN

Scale: ¾" = 1'-0"

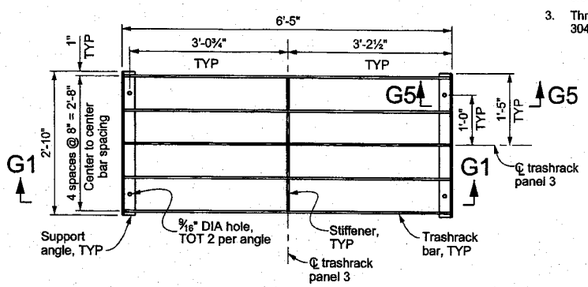

TRASHRACK PANEL 3 PLAN

Scale: ¾" = 1'-0"

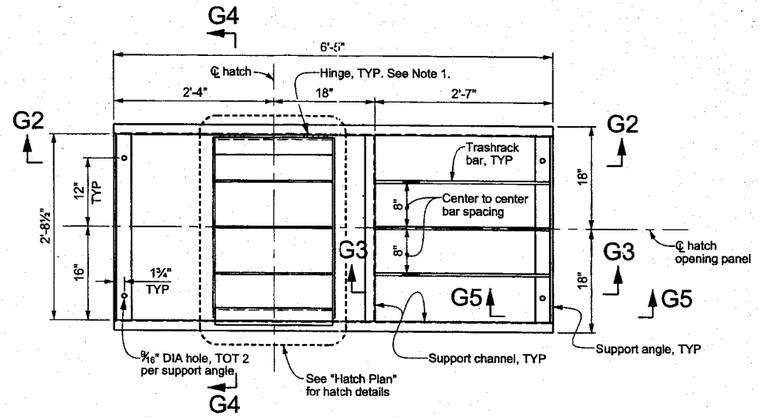

HATCH OPENING PANEL PLAN

Scale: ¾" = 1'-0"

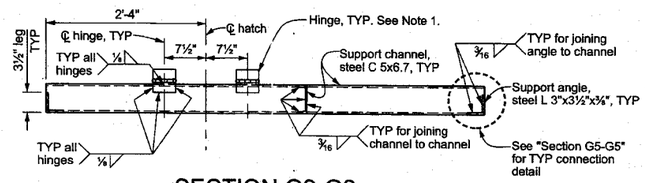

SECTION G2-G2

Scale: ¾" = 1'-0"

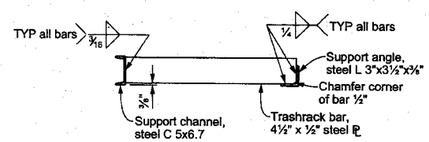

SECTION G3-G3

Scale: ¾" = 1'-0"

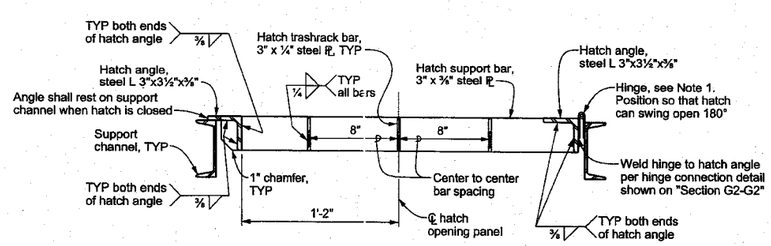

SECTION G4-G4

Scale: ¾" = 1'-0"

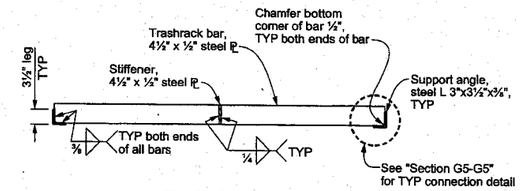

SECTION G1-G1

Scale: ¾" = 1'-0"

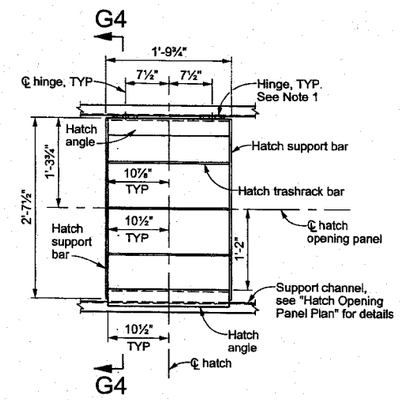

HATCH PLAN

Scale: ¾" = 1'-0"

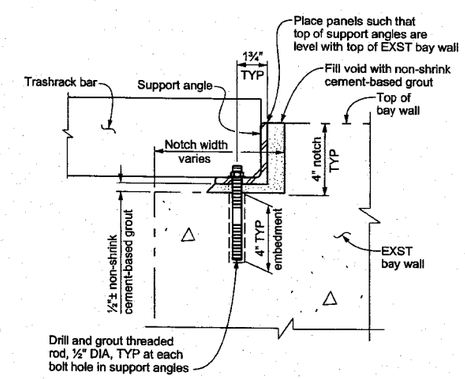

SECTION G5-G5

Not to Scale

NOTES:

1. Hatch hinges shall be 316 stainless steel surface mount hinges without holes, nonremovable pin, 3" high leaf, 3" wide open, .120" thick
2. All trashrack panels & trashrack hatch shall be hot-dip galvanized after fabrication. After galvanization, the trashrack panels & hatch shall be shop painted to create a duplex corrosion protection system.
3. Threaded anchor rods shall be 304 stainless steel with 304 SS nut and washer.

THE CONTRACTOR SHALL VERIFY ALL CONTROLLING FIELD DIMENSIONS BEFORE ORDERING OR FABRICATING ANY MATERIAL.

DATE	MK	DESCRIPTION
10/17/11	1	Revised Project Name and Project ID No.

REVISIONS

REGISTERED PROFESSIONAL ENGINEER — Scott D. Gregowske — NO. C68087 — EXP. 06/30/11 — CIVIL — STATE OF CALIFORNIA

PROJECT ENGINEER 12/15/10 DATE

PLAN H

COUNTY OF LOS ANGELES DEPARTMENT OF PUBLIC WORKS

EATON WASH DAM AND RESERVOIR

1 INLET/OUTLET WORKS REHABILITATION

HORIZONTAL TRASHRACK DETAILS

FCC0001213 | 1 | PCA X5009677 | DWG 24A-D65.10 | SHEET 10 OF 33

DRAFTER S. GREGOWSKE | DESIGNER S. GREGOWSKE | CHECKER KENNETH HO | CADD PROJECT FILE NAME FCC0001213-STRUCTURES (H).dgn | 1 REVIEWED BY KENNETH HO | DATE 12/29/10

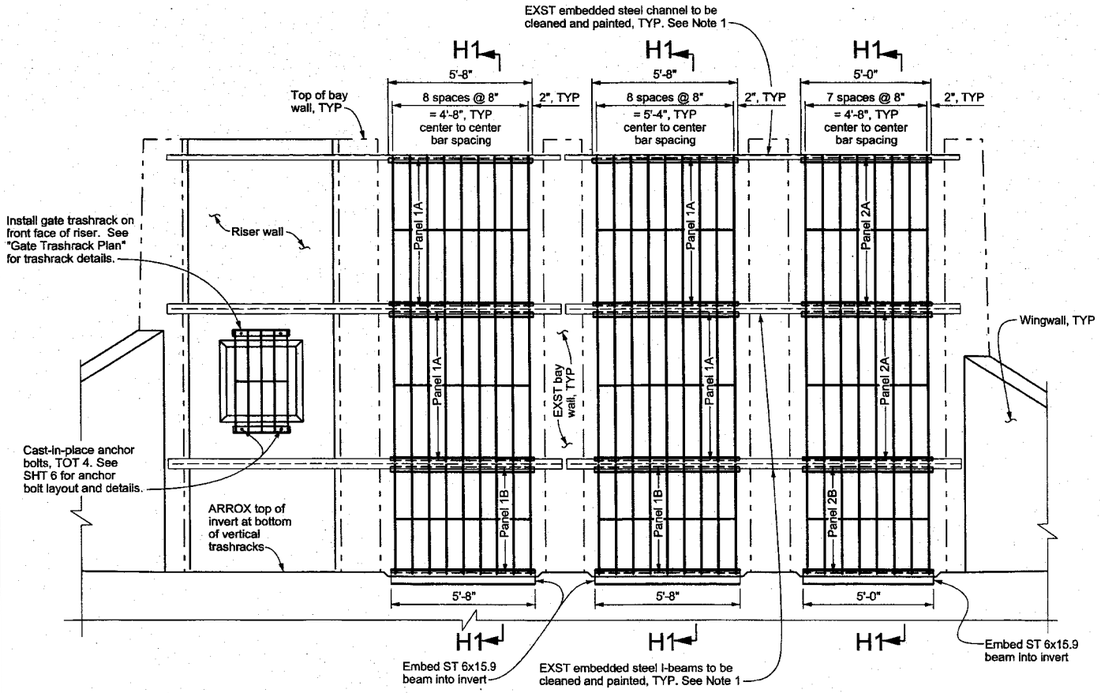

INCLINED TRASHRACK FRONT ELEVATION

Scale: ⅜" = 1'-0"

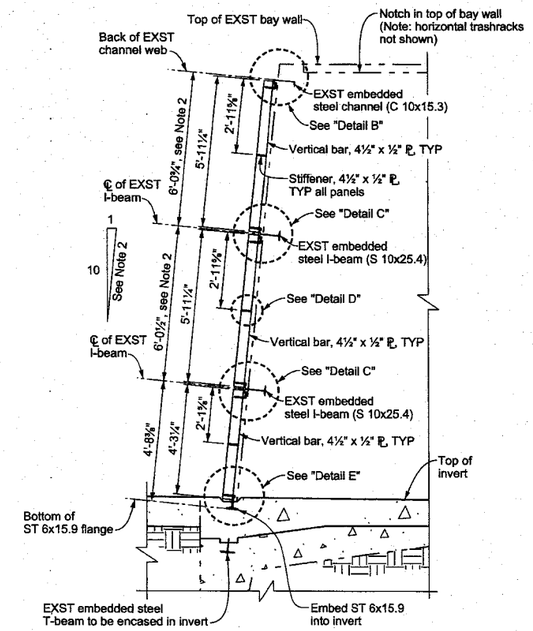

SECTION H1-H1

Scale: ⅜" = 1'-0"

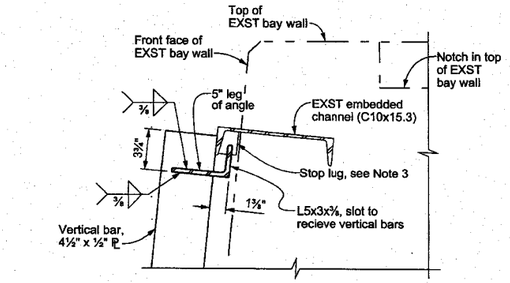

DETAIL B

Not to Scale

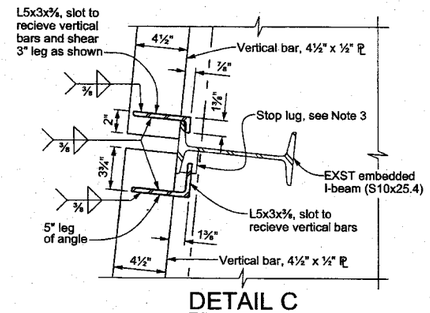

DETAIL C

Not to Scale

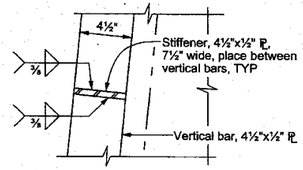

DETAIL D

Not to Scale

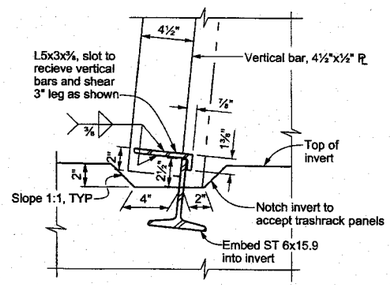

DETAIL E

Not to Scale

NOTES:

1. The existing paint system on structural steel contains lead based paint. The Contractor shall refer to the Special Provisions for requirements regarding lead based paint.
2. Contractor shall verify the placement and controlling dimensions of the existing structure prior to ordering or fabricating any material.
3. Existing stop lugs located on the underside of the embedded I-beams and channels shall remain. Where the existing stop lugs are damaged or missing, the Contractor shall replace them as follows:

   Field weld ¾" thick steel plate to underside of existing embedded I-beams or channels, ½" from end of the trashrack panel angles. Dimension of steel plate shall match the dimension of the existing stop lugs.
4. All trashrack panels shall be hot-dip galvanized after fabrication. After galvanization, the trashrack panels shall be shop painted to create a duplex corrosion protection system.

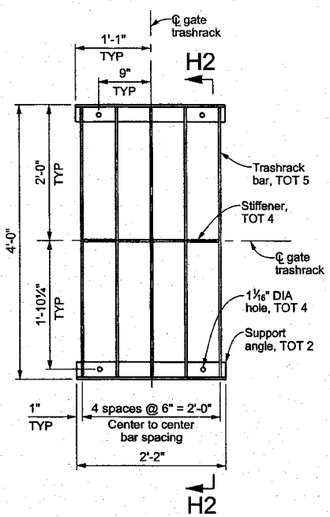

GATE TRASHRACK PLAN

Scale: 1" = 1'-0"

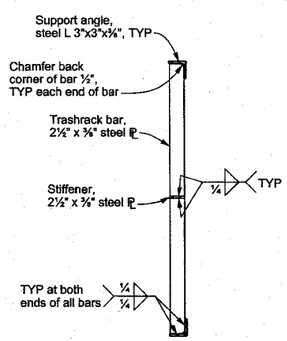

SECTION H2-H2

Scale: 1" = 1'-0"

THE CONTRACTOR SHALL VERIFY ALL CONTROLLING FIELD DIMENSIONS BEFORE ORDERING OR FABRICATING ANY MATERIAL.

DATE	MK	DESCRIPTION
10/17/11	1	Revised Project Name and Project ID No.

REVISIONS

REGISTERED PROFESSIONAL ENGINEER Scott D. Gregowske NO. C88087 EXP. 06/30/11 CIVIL STATE OF CALIFORNIA

PROJECT ENGINEER 12/15/10 DATE

PLAN H

COUNTY OF LOS ANGELES DEPARTMENT OF PUBLIC WORKS

EATON WASH DAM AND RESERVOIR

1 INLET/OUTLET WORKS REHABILITATION

INCLINED TRASHRACK ELEVATION AND DETAILS

FCC0001213 | 1 | PCA X5009677 | DWG 24A-D65.11 | SHEET 11 OF 33

DRAFTER S. GREGOWSKE | DESIGNER S. GREGOWSKE | CHECKER KENNETH HO | CADD PROJECT FILE NAME FCC0001213-STRUCTURES (H).dgn | REVIEWED BY KENNETH HO | DATE 12/29/10

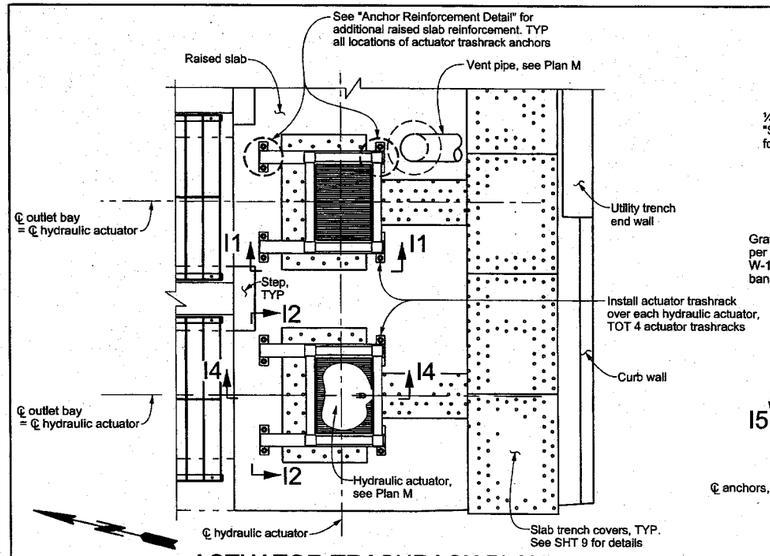

ACTUATOR TRASHRACK PLAN

Scale: ⅜" = 1'-0"

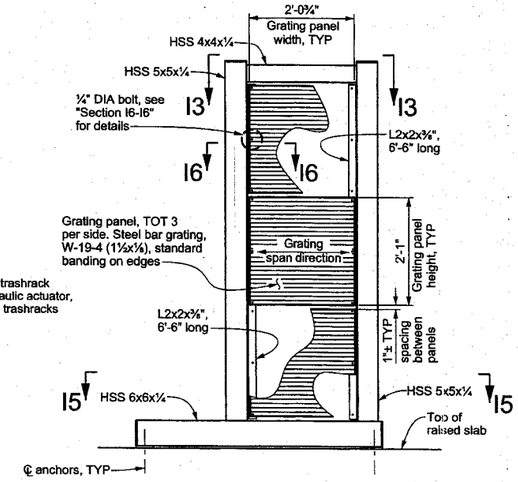

ELEVATION I1-I1

Scale: ¾" = 1'-0"

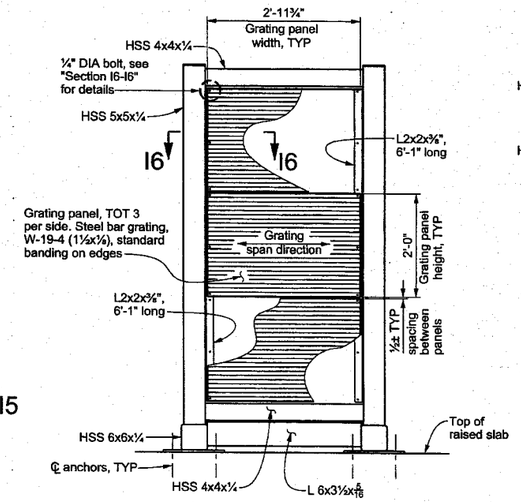

ELEVATION I2-I2

Scale: ¾" = 1'-0"

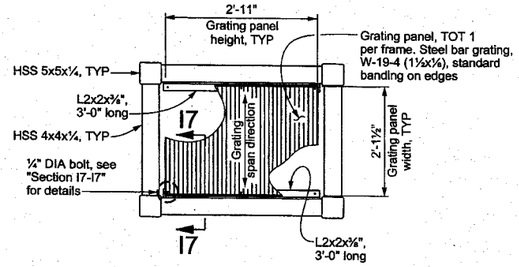

ELEVATION I3-I3

Scale: ¾" = 1'-0"

NOTES:

1. Metal bar grating shall be hot-dipped galvanized after fabrication.
2. Metal bar grating shall be attached to anchors with welded lugs. Each grating panel shall have a total of six lugs, with three lugs to a side. The fabricator of the actuator trashrack frame and the fabricator of the grating panels shall coordinate the location of the welded lugs and the ¼" DIA bolts used to anchor the panels. The location and spacing of the welded lugs and bolts shall be approved by the Engineer prior to fabrication.
3. Threaded anchor rods shall be 304 stainless steel with 304 SS nut and washer.
4. ¼" DIA bolts used to join grating panels to trashrack frame shall conform to ASTM A307 and shall be hot-dipped galvanized.
5. All actuator trashrack frames shall be hot-dip galvanized after fabrication. After galvanization, the actuator trashrack frames shall be shop painted to create a duplex corrosion protection system.

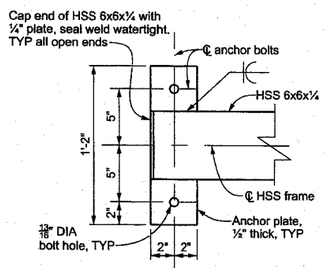

ANCHOR PLATE DETAIL

Scale: 2" = 1'-0"

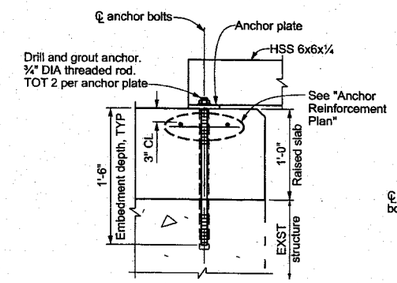

ANCHOR DETAIL

Not to Scale

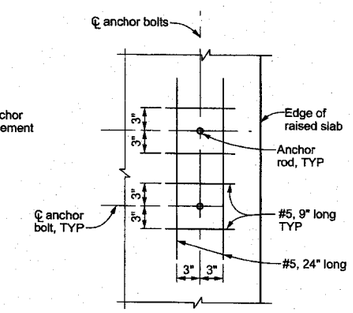

ANCHOR REINFORCEMENT DETAIL

Not to Scale

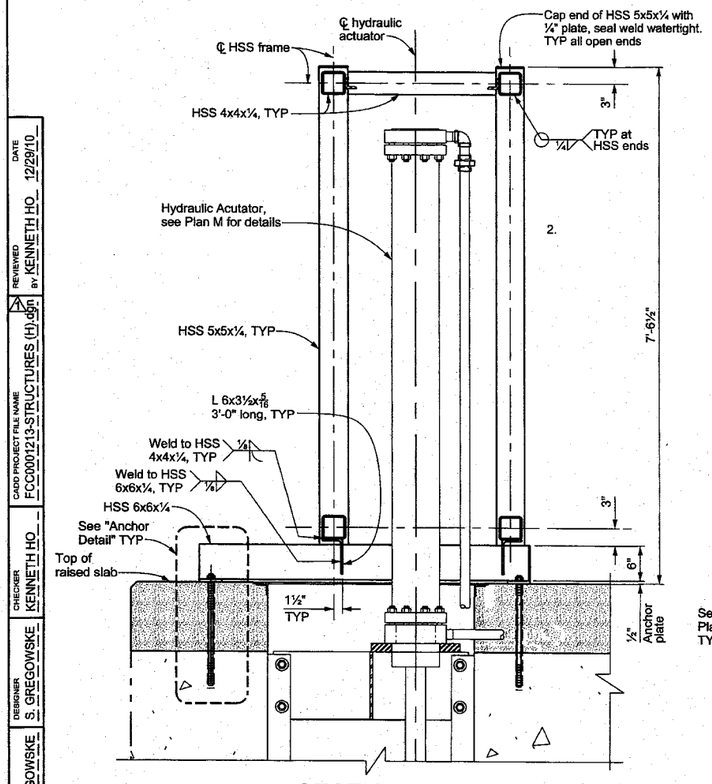

SECTION I4-I4

Scale: 1" = 1'-0"

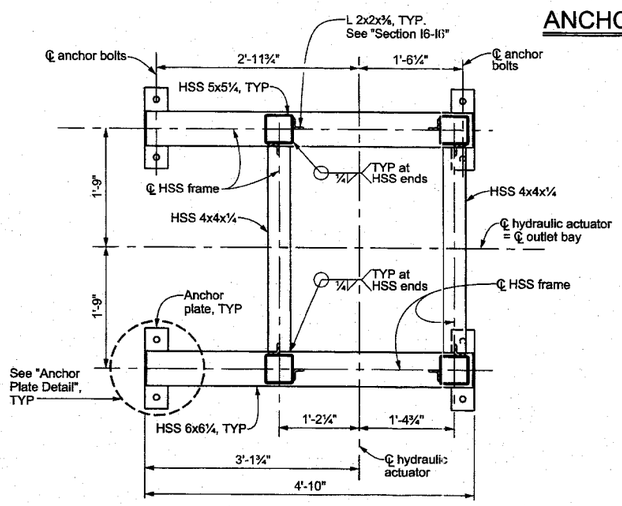

SECTION I5-I5

Scale: 1" = 1'-0"

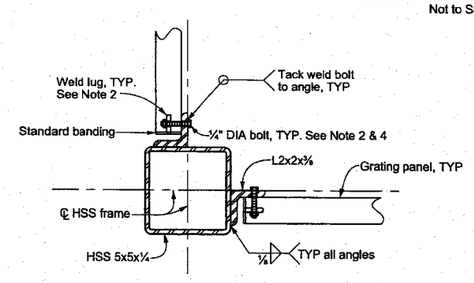

SECTION I6-I6

Scale: 3" = 1'-0"

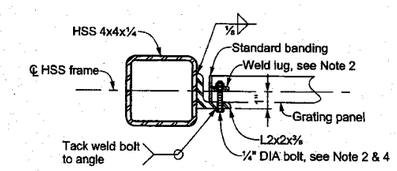

SECTION I7-I7

Scale: 3" = 1'-0"

THE CONTRACTOR SHALL VERIFY ALL CONTROLLING FIELD DIMENSIONS BEFORE ORDERING OR FABRICATING ANY MATERIAL.

DATE	MK	DESCRIPTION
10/17/11	1	Revised Project Name and Project ID No.

REVISIONS

REGISTERED PROFESSIONAL ENGINEER Scott D. Gregowske NO. C68067 EXP. 06/30/11 CIVIL STATE OF CALIFORNIA

PROJECT ENGINEER 12/15/10 DATE

PLAN H

COUNTY OF LOS ANGELES DEPARTMENT OF PUBLIC WORKS

EATON WASH DAM AND RESERVOIR

1 INLET/OUTLET WORKS REHABILITATION

ACTUATOR TRASHRACK PLAN AND DETAILS

FCC0001213 | 1 | PCA X5009677 | DWG 24A-D65.12 | SHEET 12 OF 33

DRAFTER S. GREGOWSKE | DESIGNER S. GREGOWSKE | CHECKER KENNETH HO | CADD PROJECT FILE NAME FCC0001213-STRUCTURES (H).dgn | 1 | REVIEWED BY KENNETH HO | DATE 12/29/10

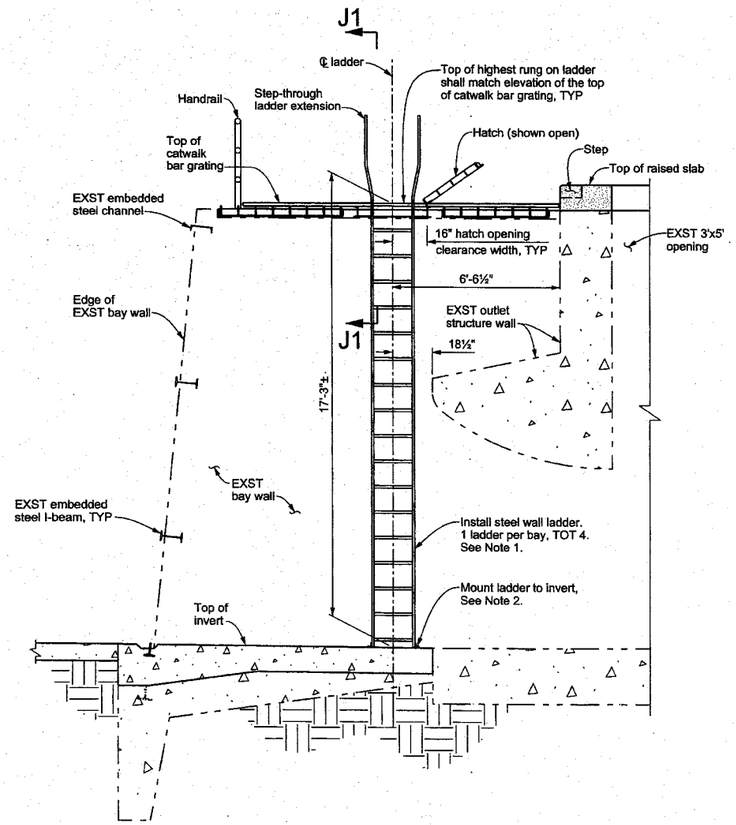

TYPICAL LADDER FRONT ELEVATION

Scale: ¾" = 1'-0"

Note: Riser wall and inclined trashracks are not shown for clarity.

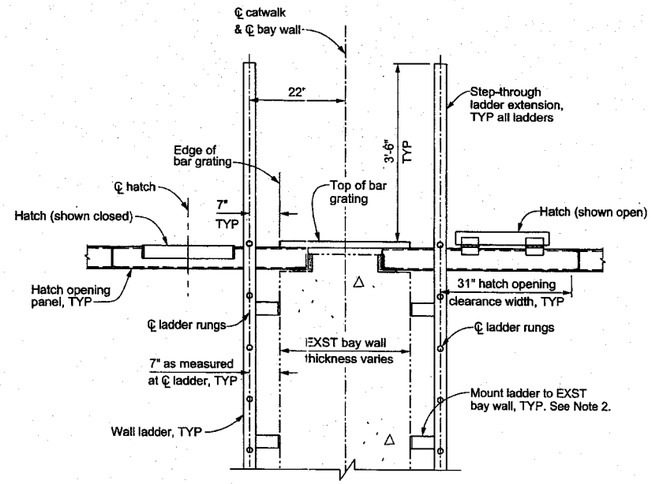

SECTION J1-J1

Scale: ¾" = 1'-0"

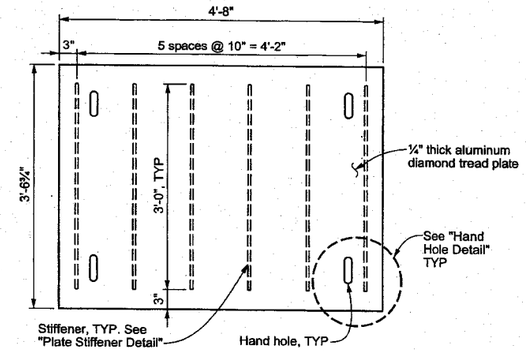

40" TRENCH COVER PLATE

Scale: 1" = 1'-0"

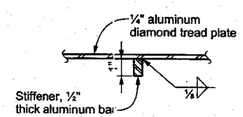

PLATE STIFFENER DETAIL

Scale: 3" = 1'-0"

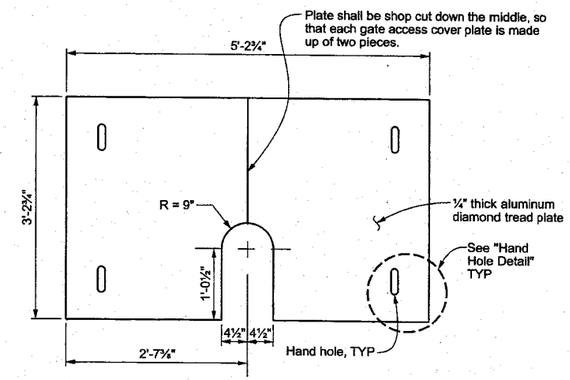

GATE ACCESS COVER PLATE

Scale: 1" = 1'-0"

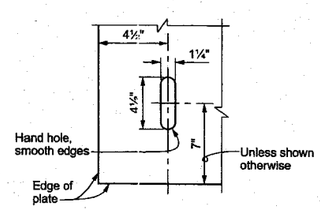

HAND HOLE DETAIL

Scale: 2" = 1'-0"

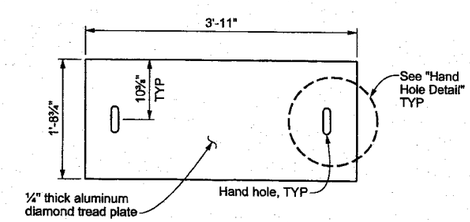

18" TRENCH COVER PLATE

Scale: 1" = 1'-0"

NOTES:

1. The wall ladders, including the step through extensions, shall be galvanized steel, and shall conform to all Cal/OHSA requirements.
2. Ladder shall be fixed to the structure per anchoring recommendations of the ladder manufacturer, subject to the approval of the Engineer.
2. All aluminum used for the construction of the cover plates shall be 6061-T6 alloy. Aluminum diamond plate shall conform to ASTM B632. Aluminum bars shall conform to ASTM B221.

THE CONTRACTOR SHALL VERIFY ALL CONTROLLING FIELD DIMENSIONS BEFORE ORDERING OR FABRICATING ANY MATERIAL.

DRAFTER	DESIGNER	CHECKER	CADD PROJECT FILE NAME	REVIEWED BY	DATE
S. GREGOWSKE	S. GREGOWSKE	KENNETH HO	FCC0001213-STRUCTURES (H).dgn	KENNETH HO	12/29/10

DATE	MK	DESCRIPTION
10/17/11	1	Revised Project Name and Project ID No.

REVISIONS

REGISTERED PROFESSIONAL ENGINEER — Scott D. Gregowske — NO. C88087 — EXP. 06/30/11 — CIVIL — STATE OF CALIFORNIA

PROJECT ENGINEER 12/15/10 DATE

PLAN H

COUNTY OF LOS ANGELES DEPARTMENT OF PUBLIC WORKS

EATON WASH DAM AND RESERVOIR

1 INLET/OUTLET WORKS REHABILITATION

LADDER DETAILS AND TRENCH COVER DETAILS

FCC0001213 | 1 | PCA X5009677 | DWG 24A-D65.13 | SHEET 13 OF 33

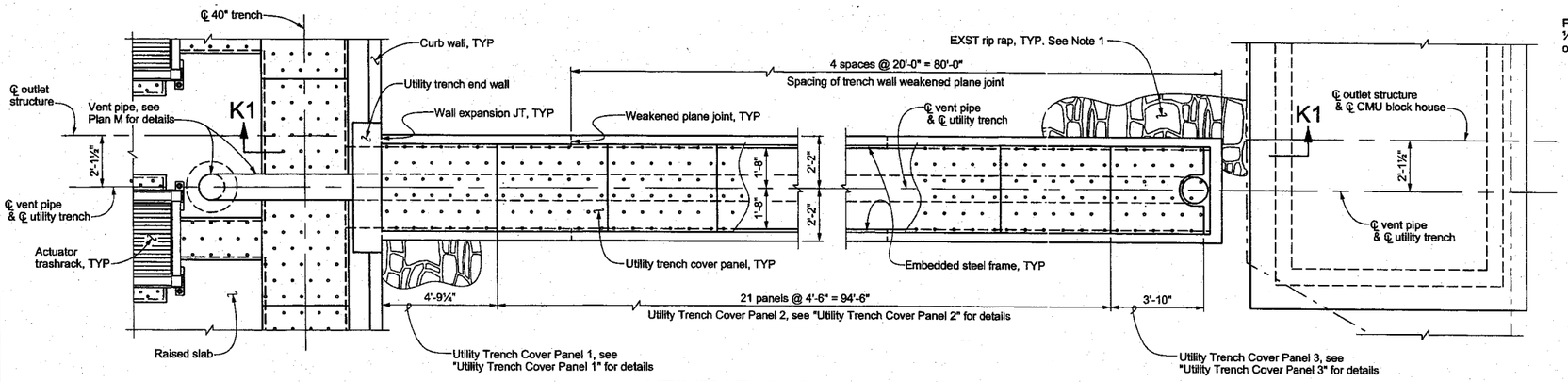

UTILITY TRENCH AND COVER PANEL PLAN

Scale: ⅜" = 1'-0"

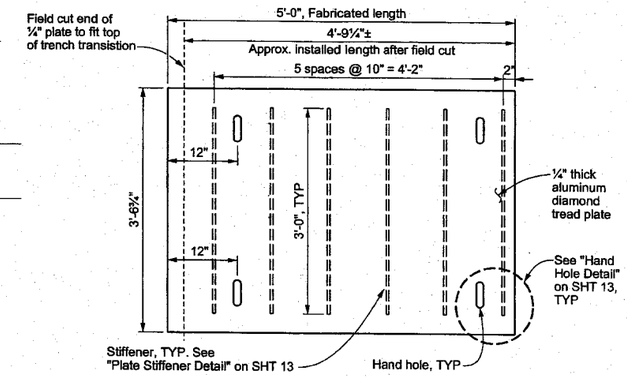

UTILITY TRENCH COVER PANEL 1

Scale: 1" = 1'-0"

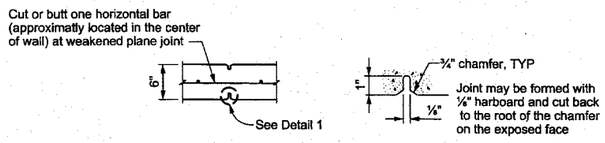

SECTION DETAIL 1

WEAKENED PLAN JOINT DETAIL

Not to Scale

NOTES:

1. Rip rap stones removed from the existing rip rap slope for the construction of the utility trench shall be salvaged and reliquished to the Agency. The Contractor shall move the rip rap stones to a on-site location designated by the Engineer.
2. All aluminum used for the construction of the cover plates shall be 6061-T6 alloy. Aluminum diamond plate shall conform to ASTM B632. Aluminum bars shall conform to ASTM B221.

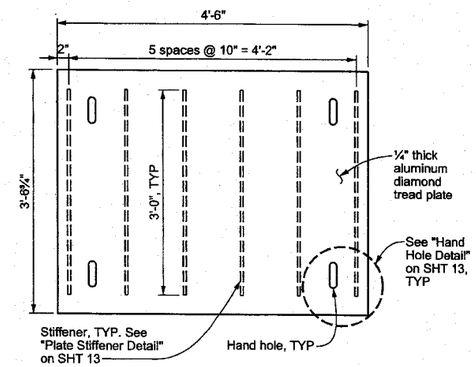

UTILITY TRENCH COVER PANEL 2

Scale: 1" = 1'-0"

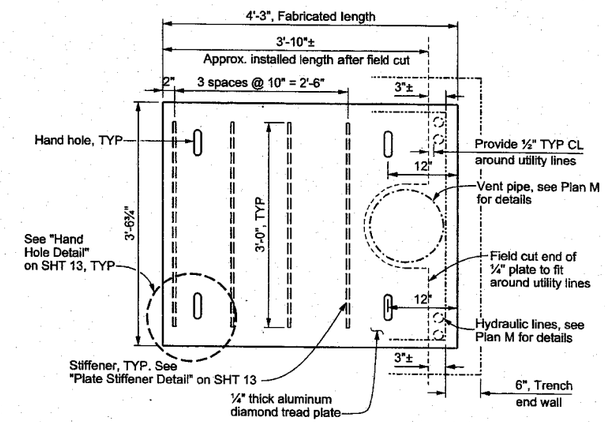

UTILITY TRENCH COVER PANEL 3

Scale: 1" = 1'-0"

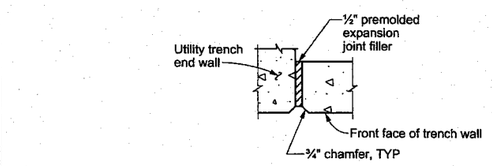

WALL EXPANSION JOINT DETAIL

Not to Scale

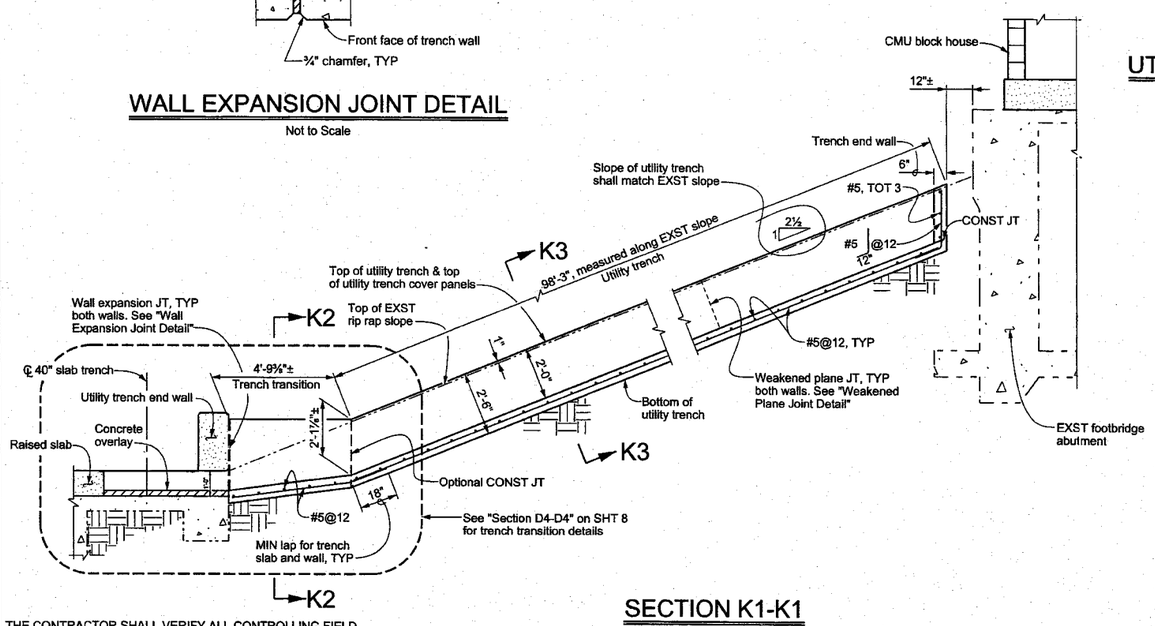

THE CONTRACTOR SHALL VERIFY ALL CONTROLLING FIELD DIMENSIONS BEFORE ORDERING OR FABRICATING ANY MATERIAL.

SECTION K1-K1

Scale: ¾" = 1'-0"

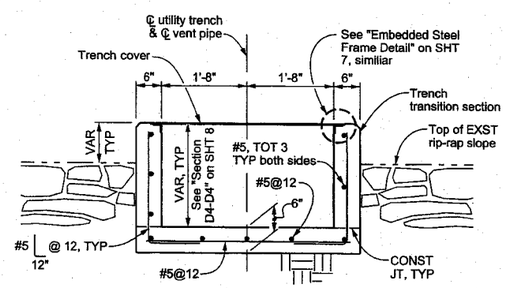

SECTION K2-K2

Scale: ¾" = 1'-0"

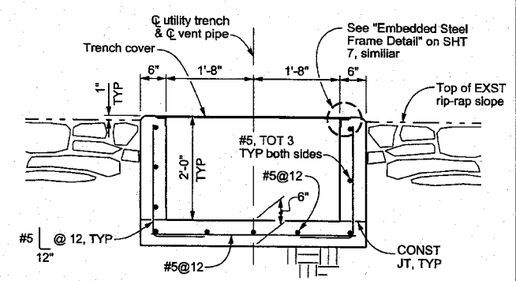

SECTION K3-K3

Scale: ¾" = 1'-0"

PLAN H

DATE	MK	DESCRIPTION
10/17/11	1	Revised Project Name and Project ID No.

REVISIONS

REGISTERED PROFESSIONAL ENGINEER Scott D. Gregowske NO. C68087 EXP. 06/30/11 CIVIL STATE OF CALIFORNIA

PROJECT ENGINEER 12/15/10 DATE

COUNTY OF LOS ANGELES DEPARTMENT OF PUBLIC WORKS

EATON WASH DAM AND RESERVOIR

1 INLET/OUTLET WORKS REHABILITATION

UTILITY TRENCH PLAN AND SECTIONS

FCC0001213 | 1 | PCA X5009677 | DWG 24A-D65.14 | SHEET 14 OF 33

DRAFTER S. GREGOWSKE | DESIGNER S. GREGOWSKE | CHECKER KENNETH HO | REVIEWED BY KENNETH HO DATE 12/29/10 | 1 dgn | CADD PROJECT FILE NAME FCC0001213-STRUCTURES (H)

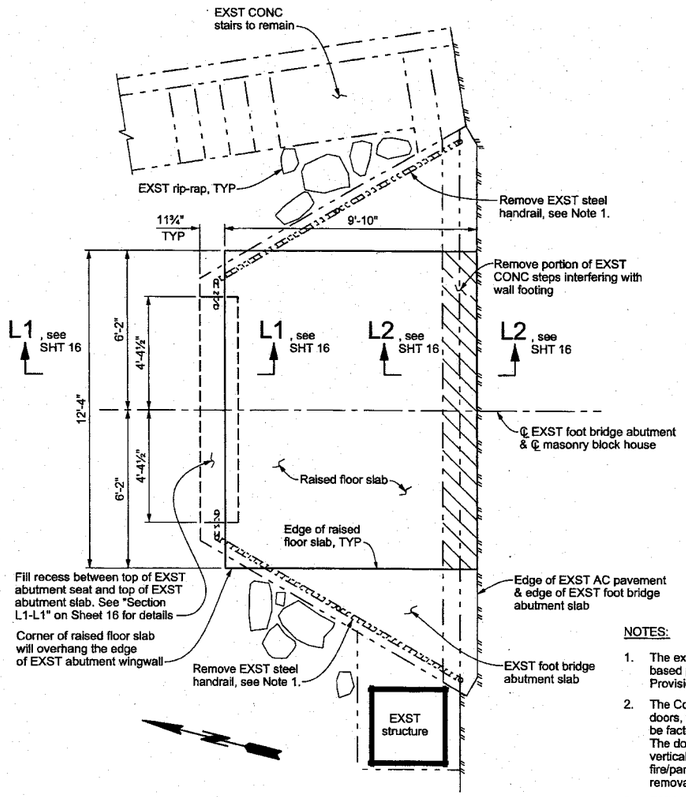

BLOCK HOUSE - FOUNDATION PLAN

Scale: ⅜" = 1'-0"

NOTES:

1. The existing paint system on structural steel contains lead based paint. The Contractor shall refer to the Special Provisions for requirements regarding lead based paint.
2. The Contractor shall submit shop drawings for the double doors, to include all door hardware details. The door shall be factory painted in a color to be approved by the Engineer. The doors shall have a mortise lock and surface mounted vertical rod device combination. Each door shall have a fire/panic exit device installed. All hinges shall have non-removable pins and security studs.
3. CMU blocks shall be colored and shall have an exterior surface texture. The Contractor shall submit texture and color samples from the CMU manufacturer, with CMU color and texture to be approved by the Engineer.

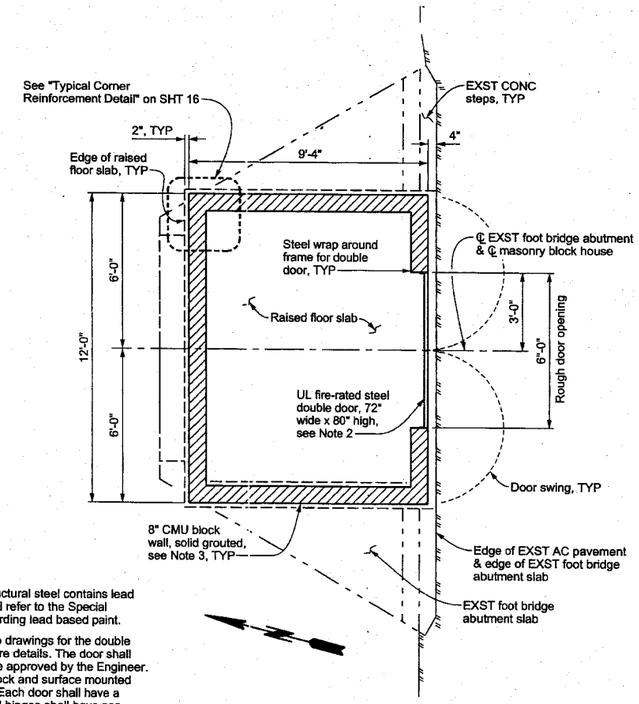

BLOCK HOUSE - FLOOR PLAN

Scale: ⅜" = 1'-0"

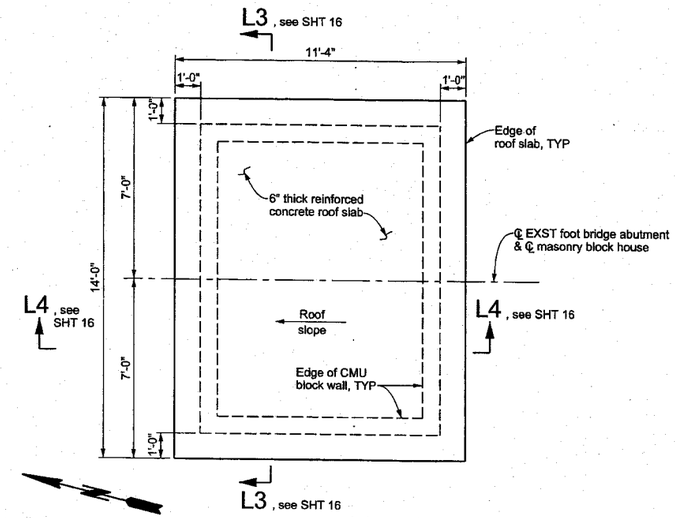

BLOCK HOUSE - ROOF PLAN

Scale: ⅜" = 1'-0"

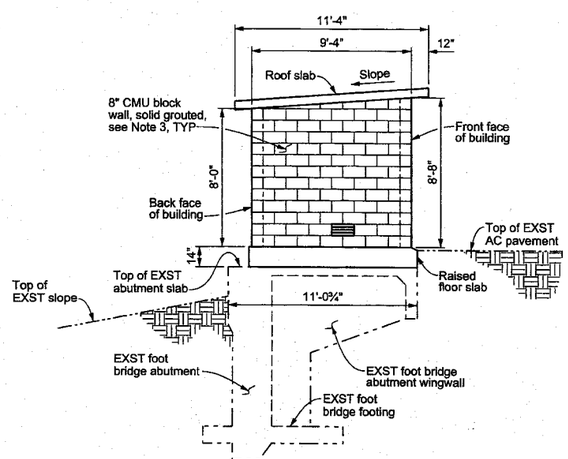

TYPICAL SIDE ELEVATION (LOOKING EAST OR WEST)

Scale: ¼" = 1'-0"

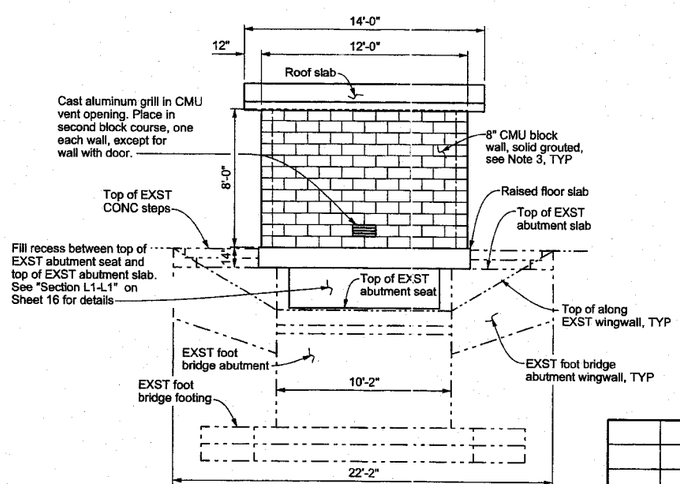

BACK ELEVATION (LOOKING SOUTH)

Scale: ¼" = 1'-0'

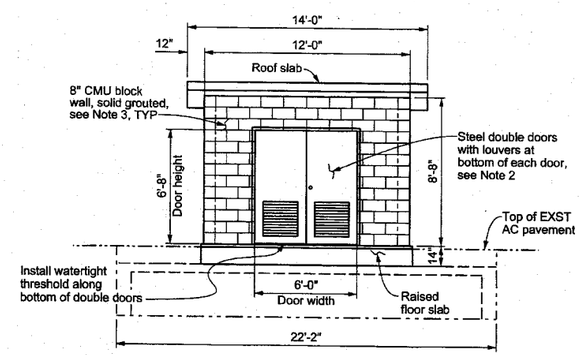

FRONT ELEVATION (LOOKING NORTH)

Scale: ¼" = 1'-0"

THE CONTRACTOR SHALL VERIFY ALL CONTROLLING FIELD DIMENSIONS BEFORE ORDERING OR FABRICATING ANY MATERIAL.

PLAN H

DATE	MK	DESCRIPTION
10/17/11	1	Revised Project Name and Project ID No.

REVISIONS

REGISTERED PROFESSIONAL ENGINEER — Scott D. Gregowske — No. C58087 — Exp. 06/30/11 — CIVIL — STATE OF CALIFORNIA

PROJECT ENGINEER 12/15/10 DATE

COUNTY OF LOS ANGELES DEPARTMENT OF PUBLIC WORKS

EATON WASH DAM AND RESERVOIR

1 INLET/OUTLET WORKS REHABILITATION

CMU BLOCK HOUSE PLAN AND ELEVATIONS

FCC0001213 | 1 | PCA X5009677 | DWG 24A-D65.15 | SHEET 15 OF 33

DRAFTER S. GREGOWSKE | DESIGNER S. GREGOWSKE | CHECKER KENNETH HO | REVIEWED BY KENNETH HO DATE 12/29/10 | 1 dgn | CADD PROJECT FILE NAME FCC0001213-STRUCTURES (H).dgn

DATE: $DATE$ TIME: $TIME$ FILE: $FILEL$

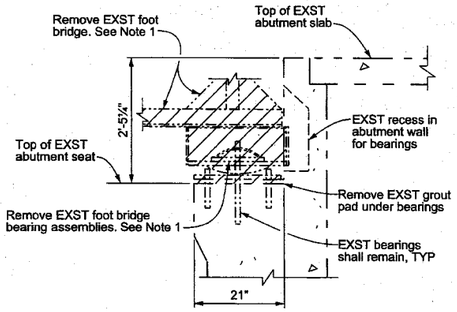

REMOVAL

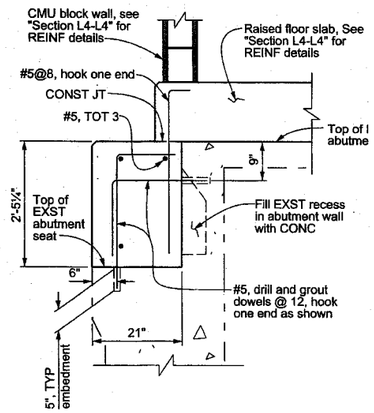

NEW CONSTRUCTION

SECTION L1-L1

Scale: ¾" = 1'-0"

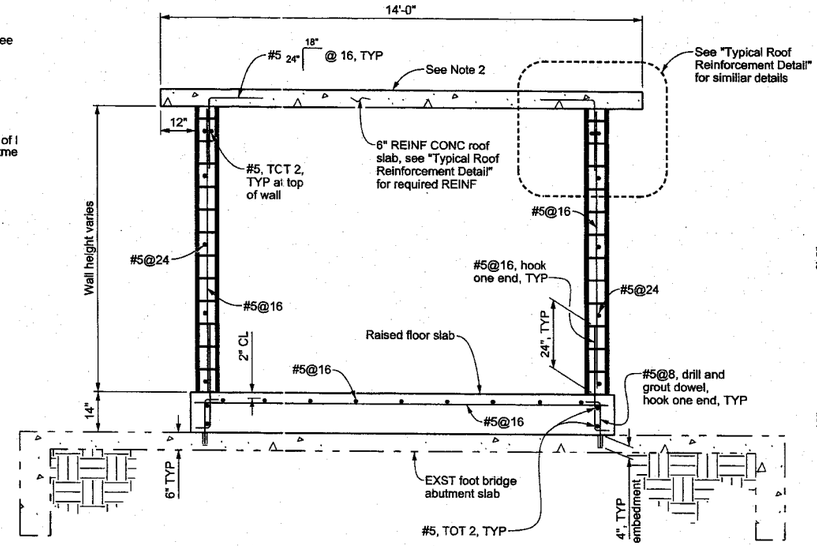

SECTION L3-L3

Scale: ½" = 1'-0"

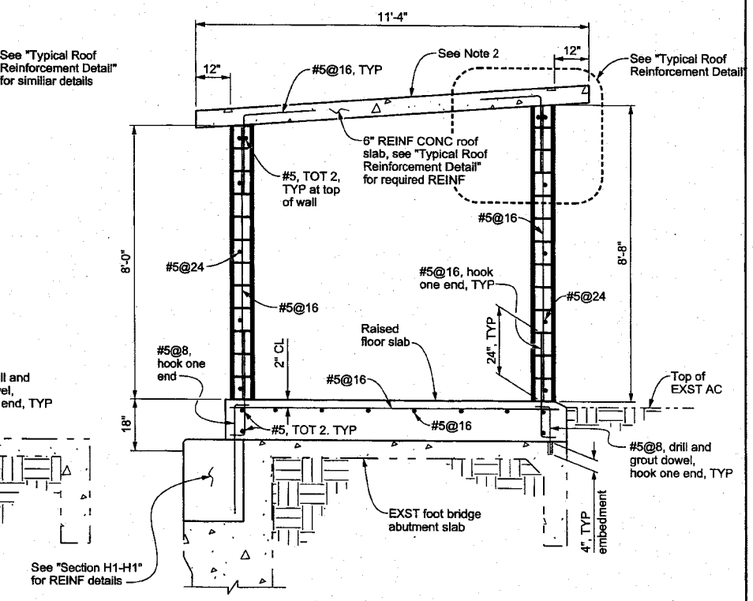

SECTION L4-L4

Scale: ½" = 1'-0"

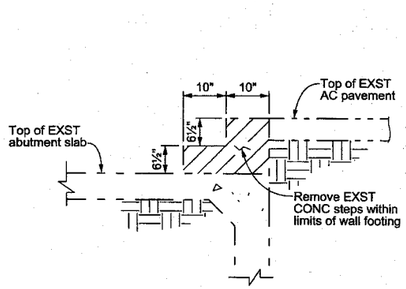

REMOVAL

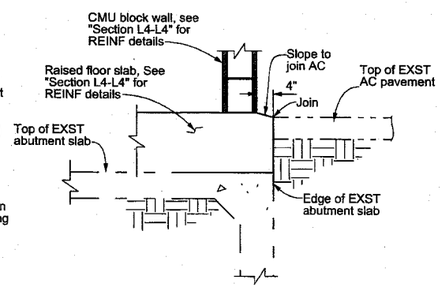

NEW CONSTRUCTION

SECTION L2-L2

Scale: ¾" = 1'-0"

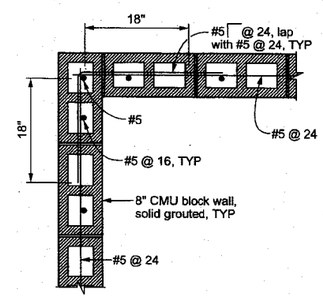

TYPICAL CORNER REINFORCEMENT DETAIL

Not to Scale

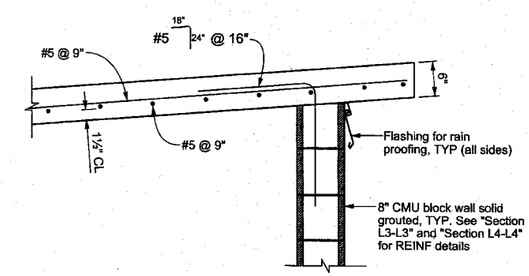

TYPICAL ROOF REINFORCEMENT DETAIL

Not to Scale

NOTES:

1. The existing paint system on structural steel contains lead based paint. The Contractor shall refer to the Special Provisions for requirements regarding lead based paint.
2. The concrete roof shall be sealed and waterproofed using an elastomeric roof membrane system of Roof-Lok and Flex-Roof by US Coatings Solutions or Agency approve equal.

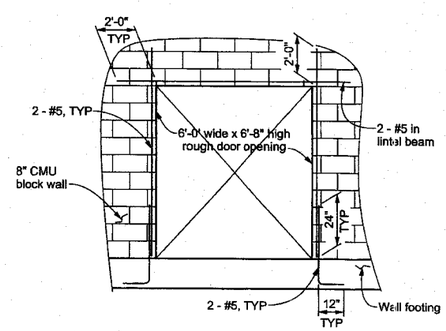

TYPICAL DOOR OPENING REINFORCEMENT DETAIL

Not to Scale

THE CONTRACTOR SHALL VERIFY ALL CONTROLLING FIELD DIMENSIONS BEFORE ORDERING OR FABRICATING ANY MATERIAL.

DATE	MK	DESCRIPTION
10/17/11	1	Revised Project Name and Project ID No.

REVISIONS

REGISTERED PROFESSIONAL ENGINEER Scott D. Gregowske NO. C68087 EXP. 06/30/11 CIVIL STATE OF CALIFORNIA

PROJECT ENGINEER DATE

PLAN H

COUNTY OF LOS ANGELES DEPARTMENT OF PUBLIC WORKS

EATON WASH DAM AND RESERVOIR

1 INLET/OUTLET WORKS REHABILITATION

CMU BLOCK HOUSE SECTIONS AND DETAILS

FCC0001213 | 1 | PCA X5009677 | DWG 24A-D65.16 | SHEET 16 OF 33

DATE 12/29/10 | REVIEWED BY KENNETH HO | 1 | CADD PROJECT FILE NAME FCC0001213-STRUCTURES (H).dgn | CHECKER KENNETH HO | DESIGNER S. GREGOWSKE | DRAFTER S. GREGOWSKE

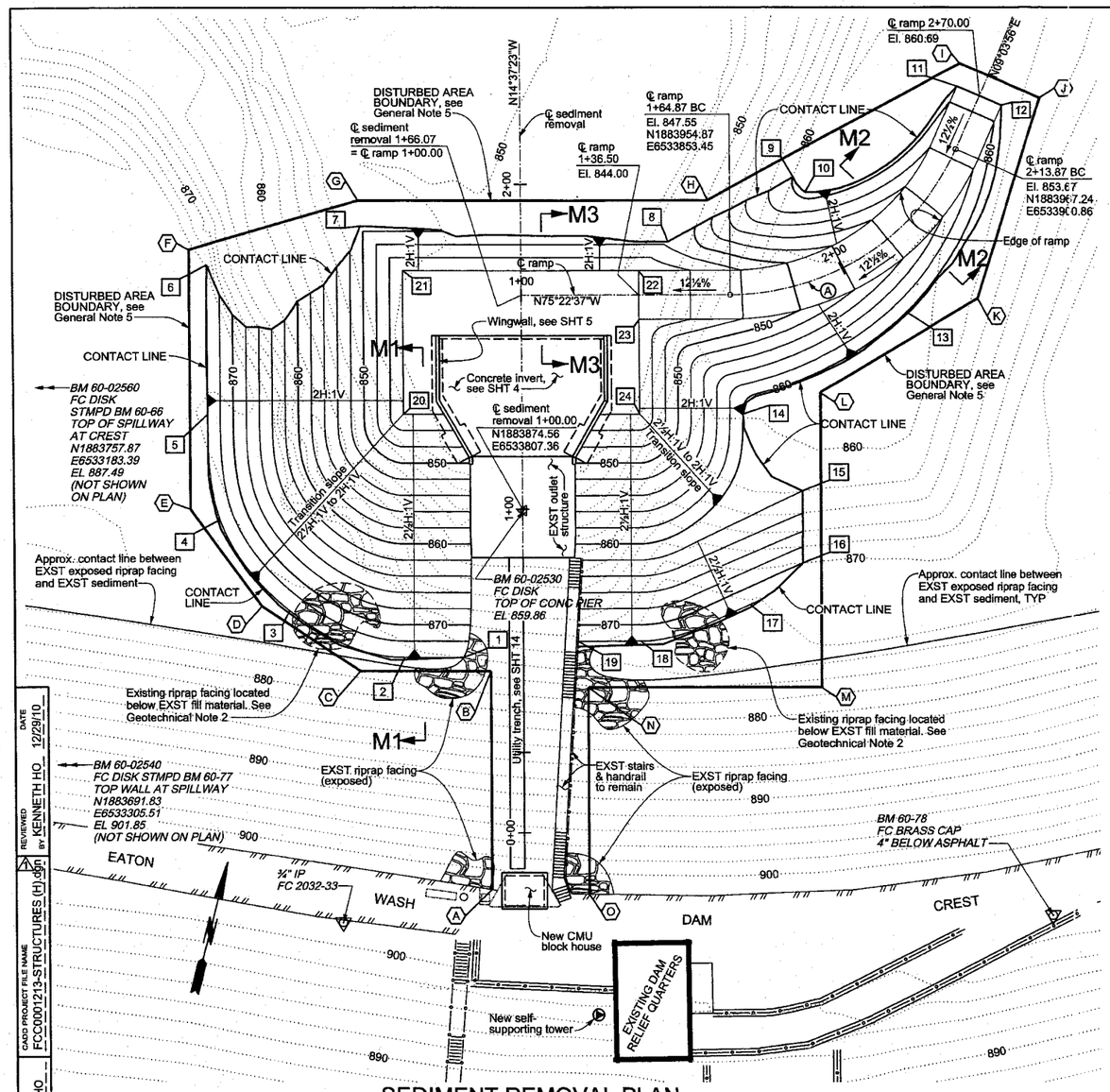

SEDIMENT REMOVAL PLAN

Scale: 1" = 20'-0"

SLOPE GRADING COORDINATE TABLE *STATION & OFFSET ARE REFERENCED FROM ℄ SEDIMENT REMOVAL)					
POINT	STATION*	OFFSET* (FT)	ELEV (FT)	NORTH	EAST
1	0+54.24	18.57 Lt	874.00	1883825.60	6533800.94
2	0+54.24	36.50 Lt	874.00	1883821.07	6533783.59
3	0+68.62	71.50 Lt	874.00	1883826.15	6533746.10
4	0+96.74	92.79 Lt	874.00	1883847.98	6533718.40
5	1+29.24	96.50 Lt	874.00	1883878.49	6533706.60
6	1+75.35	96.50 Lt	874.00	1883923.11	6533694.96
7	1+87.20	49.35 Lt	850.80	1883946.49	6533737.60
8	1+82.34	45.65 Rt	850.40	1883965.76	6533830.74
9	2+02.21	84.21 Rt	860.00	1883994.72	6533863.04
10	1+97.52	87.83 Rt	860.70	1883991.10	6533867.72
11	2+30.71	134.10 Rt	860.70	1884034.90	6533904.11
12	2+24.71	147.78 Rt	860.70	1884032.54	6533918.87
13	1+60.78	118.14 Rt	860.00	1883963.20	6533906.33
14	1+29.24	68.50 Rt	860.00	1883920.15	6533866.26
15	1+05.55	86.50 Rt	862.00	1883901.77	6533889.65
16	0+83.25	86.50 Rt	870.00	1883880.19	6533895.28
17	0+70.46	70.43 Rt	872.00	1883863.77	6533882.97
18	0+59.24	36.50 Rt	872.00	1883844.34	6533852.97
19	0+59.24	16.92 Rt	872.00	1883839.40	6533834.02
20	1+29.24	36.50 Lt	844.00	1883893.64	6533764.66
21	1+73.57	36.50 Lt	844.00	1883936.54	6533753.47
22	1+73.57	36.50 Rt	844.00	1883940.45	6533827.89
23	1+58.57	36.50 Rt	844.00	1883940.45	6533827.89
24	1+29.24	36.50 Rt	844.00	1883912.07	6533835.29

DISTURBED AREA BOUNDARY COORDINATE TABLE *STATION & OFFSET ARE REFERENCED FROM ℄ SEDIMENT REMOVAL)				
POINT	STATION*	OFFSET* (FT)	NORTH	EAST
A	0+17.67	10.00 Lt	1883758.18	6533827.39
B	0+50.00	10.00 Lt	1883823.66	6533810.30
C	0+50.00	50.00 Lt	1883813.56	6533771.60
D	0+70.00	80.00 Lt	1883825.34	6533737.52
E	1+00.00	102.00 Lt	1883848.81	6533708.66
F	1+80.00	102.00 Lt	1883926.22	6533688.47
G	1+95.00	50.00 Lt	1883953.86	6533734.99
H	1+95.00	58.00 Rt	1883981.13	6533839.5
I	2+38.00	135.00 Rt	1884042.18	6533903.15
J	2+27.00	160.00 Rt	1884037.84	6533930.1
K	1+65.00	140.00 Rt	1883972.80	6533926.41
L	1+36.00	92.00 Rt	1883844.57	6533910.26
M	0+45.00	92.00 Rt	1883844.57	6533910.26
N	0+45.00	20.00 Rt	1883826.40	6533840.60
O	0+19.09	20.00 Rt	1883764.38	6533856.78

CURVE DATA						
CURVE	RADIUS FT.	CENTRAL ANGLE DEG.	MIN.	SEC.	LENGTH FT.	TANGENT FT.
A	75	66	18	41	86.80	49.00

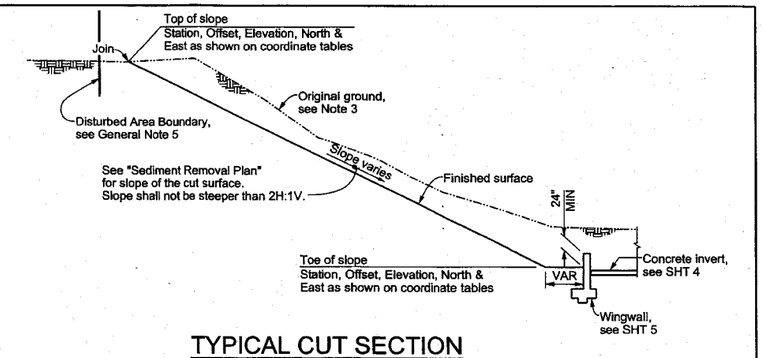

TYPICAL CUT SECTION

Not to Scale

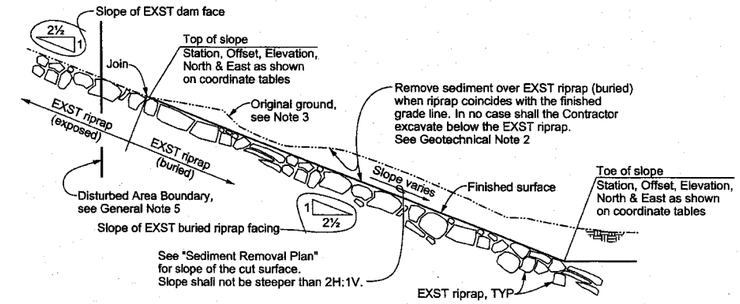

SECTION M1-M1

Not to Scale

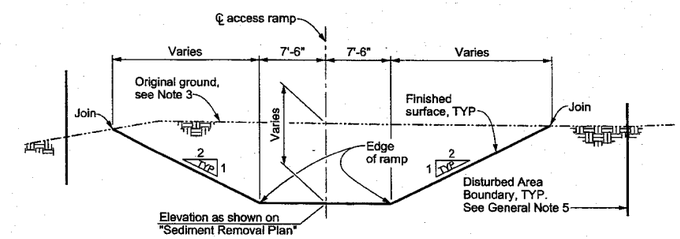

SECTION M2-M2

Not to Scale

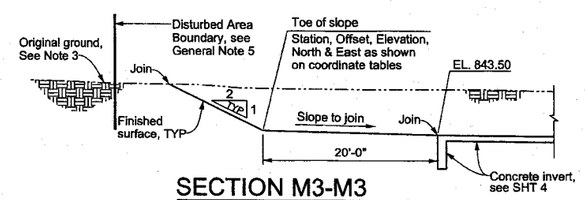

SECTION M3-M3

Not to Scale

GENERAL NOTES

1. Elevations shown are in feet above mean sea level based on U.S.C. & G.S. 1934 adjustment, NGVD 1929 datum.
2. Stations shown on the grading plan are along reference line or normal to the reference line.
3. The Grading Plan show ground lines based on May 2010 topography of the reservoir and may not represent the current site conditions.
4. The work shown on this Plan requires the Prime Contractor to have a valid Class "A" or "C12" license issued by the State of California.
4. The Station, Offset, North & East of the Disturbed Area Boundary are shown on the coordinate tables. The Contractor shall mark the Disturbed Area Boundary with silt fencing. The Contractor shall not disturb any area outside of the Disturbed Area Boundary.

GENERAL GEOTECHNICAL NOTES

1. The Contractor shall protect the existing and new structures from damaged due to excavation operations.
2. The existing riprap on the dam face continues below, and is buried beneath, the existing fill material surrounding the outlet structure. It is anticipated that the Contractor shall encounter the EXST buried riprap when excavating along the dam face. Where riprap is encountered during the excavation, the Contractor shall clear the fill material over the riprap within the limits of the finished surface shown on the Plans, but shall not proceed to excavate below the riprap. The Contractorshall be responsible for repairing any of the existing riprap facing that has been disturbed by the Contractor's operations.
3. If over excavation of the cut slope occurs, the Contractor shall be responsible to fill and recompact the slopes to the specified finished grade to a relative compaction of 90 percent.

REFERENCES

Topography: Eaton Wash Dam and Reservoir 24A-T64 (May 2010)

BENCHMARK

BM 060-02560
El. = 887.49 NGVD29 U.S.C. & G.S. 1934 ADJ
FC DISK STAMPED B.M. 60-66
CENTER OF SPILLWAY AT CREST
N 1883857.8730
E 65333183.3943
FC 2032-119

THE CONTRACTOR SHALL VERIFY ALL CONTROLLING FIELD DIMENSIONS BEFORE ORDERING OR FABRICATING ANY MATERIAL.

DATE	MK	DESCRIPTION
10/17/11	1	Revised Project Name and Project ID No.

REVISIONS

REGISTERED PROFESSIONAL ENGINEER Scott D. Gregowske NO. C58087 EXP. 06/30/11 CIVIL STATE OF CALIFORNIA

PROJECT ENGINEER 12/15/10 DATE

PLAN H

COUNTY OF LOS ANGELES DEPARTMENT OF PUBLIC WORKS

EATON WASH DAM AND RESERVOIR

1 INLET/OUTLET WORKS REHABILITATION

HEADWORKS SEDIMENT REMOVAL PLAN

FCC0001213 | 1 | PCA X5009677 | DWG 24A-D65.17 | SHEET 17 OF 33

DRAFTER S. GREGOWSKE | DESIGNER S. GREGOWSKE | CHECKER KENNETH HO | REVIEWED BY KENNETH HO | DATE 12/29/10 | 1 dgn | CADD PROJECT FILE NAME FCC0001213-STRUCTURES (H)

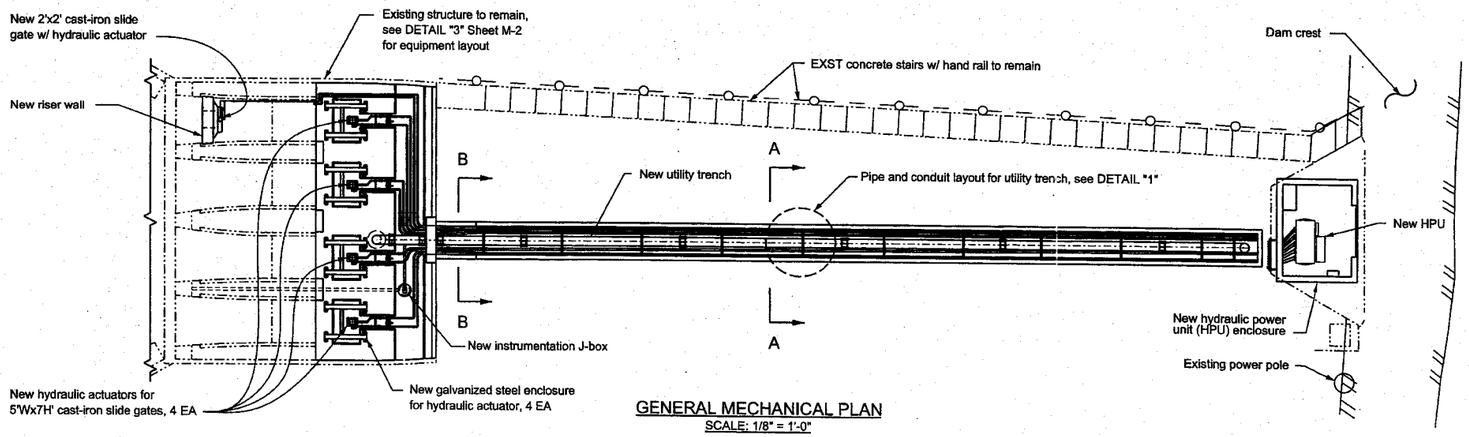

GENERAL MECHANICAL PLAN
SCALE: 1/8" = 1'-0"

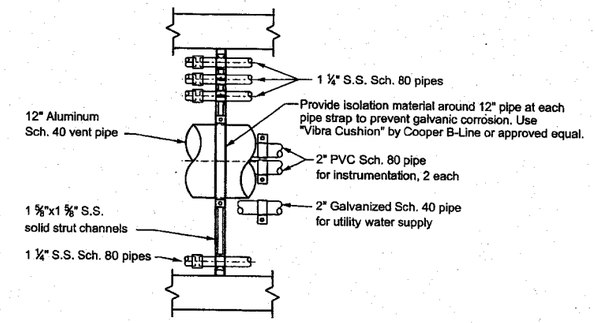

DETAIL "1", TYPICAL PIPE AND CONDUITS LAYOUT DETAIL
SCALE: 1" = 1'-0"

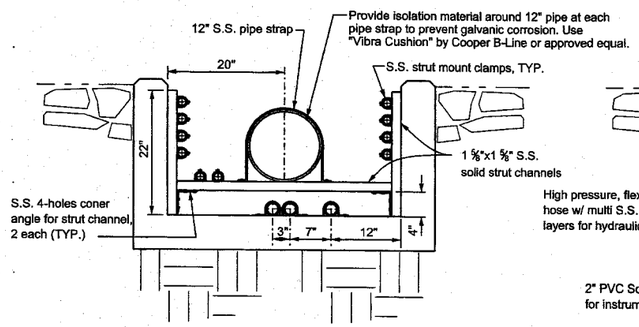

SECTION A-A
SCALE: 1" = 1'-0"

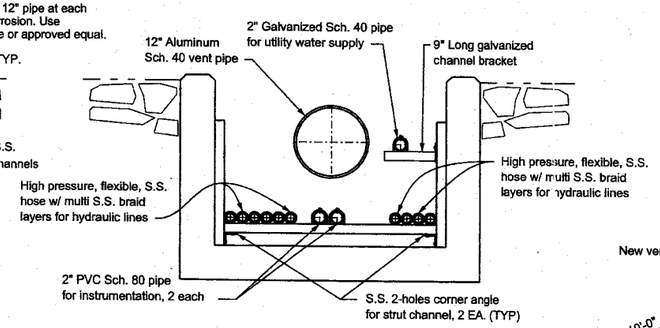

SECTION B-B
SCALE: 1" = 1'-0"

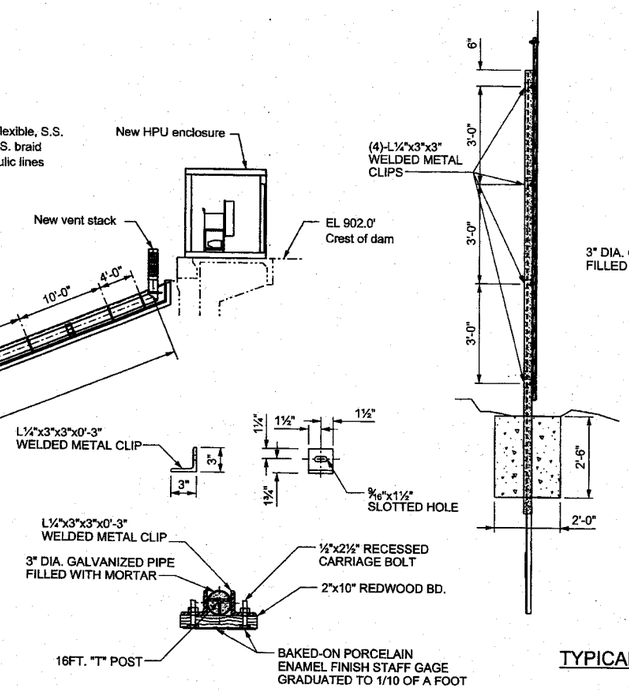

ENLARGED TOP VIEW

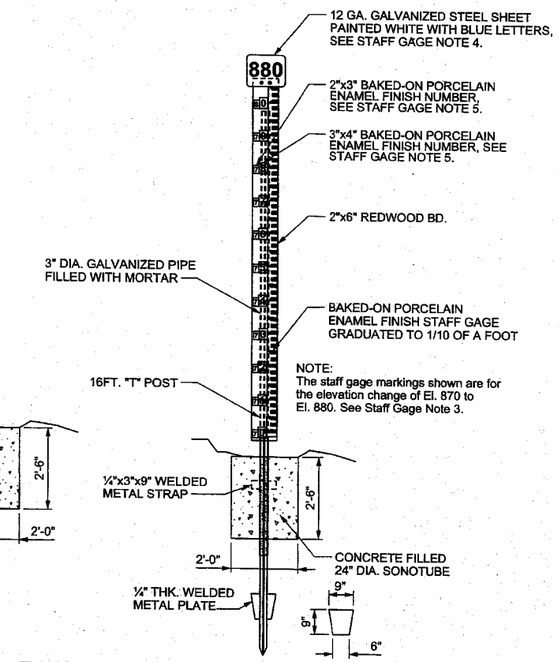

TYPICAL STAFF GAGE

NOTES:

1. The Contractor shall verify all dimensions with " * ".

NOTE:
The staff gage markings shown are for the elevation change of El. 870 to El. 880. See Staff Gage Note 3.

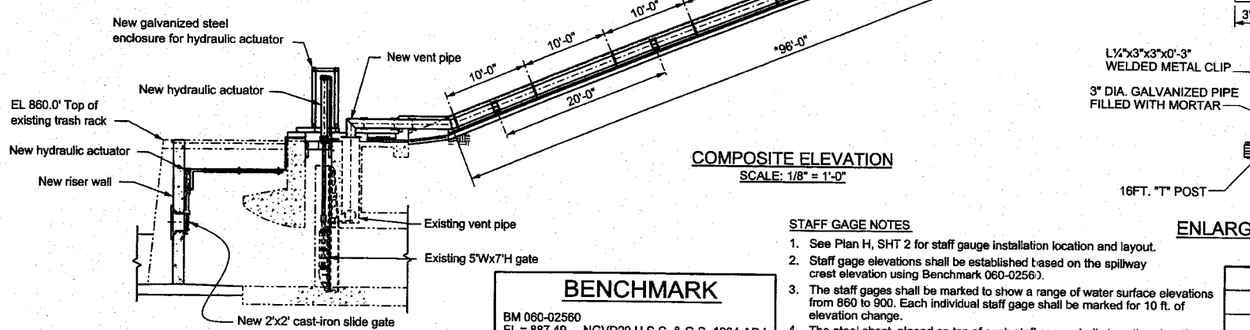

COMPOSITE ELEVATION
SCALE: 1/8" = 1'-0"

STAFF GAGE NOTES

1. See Plan H, SHT 2 for staff gauge installation location and layout.
2. Staff gage elevations shall be established based on the spillway crest elevation using Benchmark 060-02560.
3. The staff gages shall be marked to show a range of water surface elevations from 860 to 900. Each individual staff gage shall be marked for 10 ft. of elevation change.
4. The steel sheet, placed on top of each staff gage, shall show the elevation of the water surface when the water surface is near the top of the staff.
5. The markings on the staff gage shall indicate the elevation of the water level surface in 1 ft. increments.
5. Prior to fabrication, the layout and elevation markings for each staff gage shall be submitted to the Engineer for approval.

BENCHMARK

BM 060-02560
El. = 887.49 NGVD29 U.S.C. & G.S. 1934 ADJ
FC DISK STAMPED B.M. 60-66
CENTER OF SPILLWAY AT CREST
N 1883857.8730
E 65333183.3949
FC 2032-119

DATE	MK	DESCRIPTION
10/17/11	1	Revised Project Name and Project ID No.

REVISIONS

REGISTERED PROFESSIONAL ENGINEER
PETER S. CHANG
NO. 29732
EXP. 6/30/2012
MECHANICAL
STATE OF CALIFORNIA
PROJECT ENGINEER 6/13/2010 DATE

M - 1

COUNTY OF LOS ANGELES DEPARTMENT OF PUBLIC WORKS

EATON WASH DAM AND RESERVOIR

1 INLET/OUTLET WORKS REHABILITATION

GENERAL MECHANICAL PLAN AND ELEVATIONS

FCC0001213 | 1 | PCA X5009677 | DWG 24A-D65.18 | SHEET 18 OF 33

DRAFTER O. PONGPUN | DESIGNER O.PONGPUN | CHECKER P. CHANG | REVIEWED BY P. CHANG | DATE | CADD PROJECT FILE NAME FCC0001213-MECH.DGN

DATE- 8DATE8 TIME- 8TIME8 FILE- 8FILE8

PS-DF 5/99

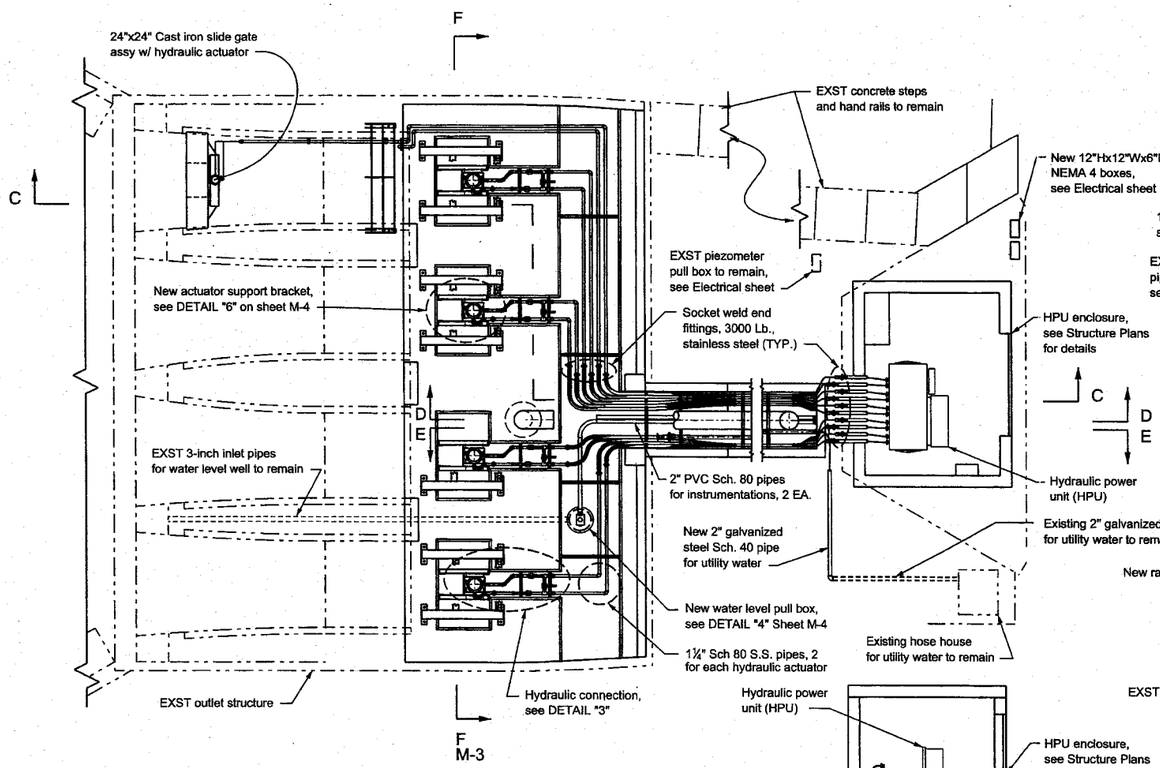

DETAIL "3" EQUIPMENT LAYOUT
SCALE: 1/4" = 1'-0"

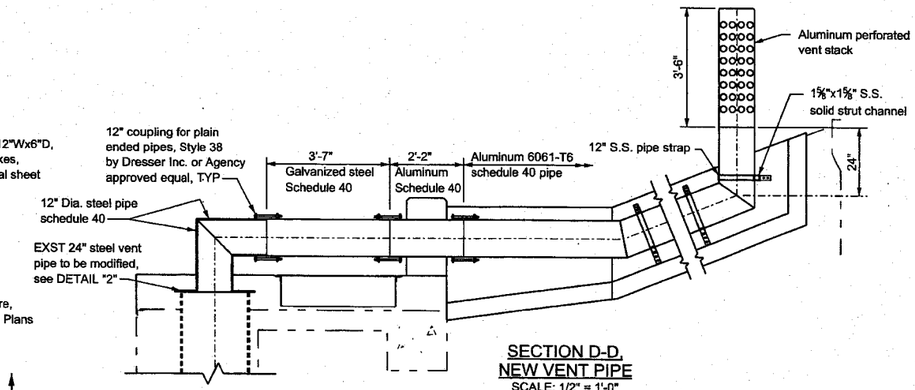

SECTION D-D,
NEW VENT PIPE
SCALE: 1/2" = 1'-0"

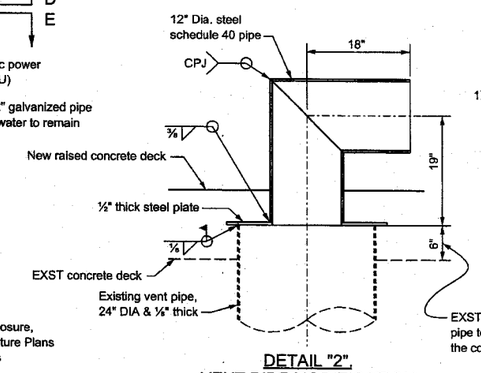

DETAIL "2",
VENT PIPE MODIFICATION
SCALE: 1" = 1'-0"

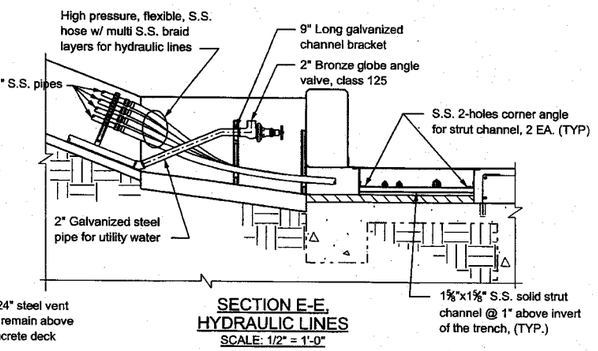

SECTION E-E,
HYDRAULIC LINES
SCALE: 1/2" = 1'-0"

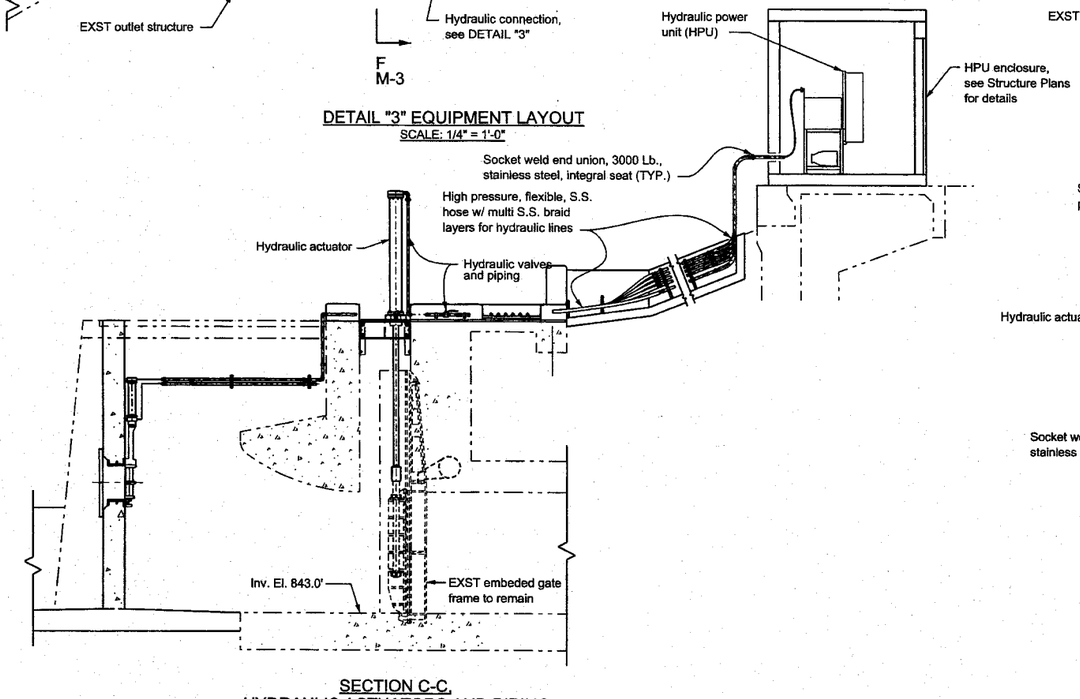

SECTION C-C,
HYDRAULIC ACTUATORS AND PIPING
SCALE: 1/4" = 1'-0"

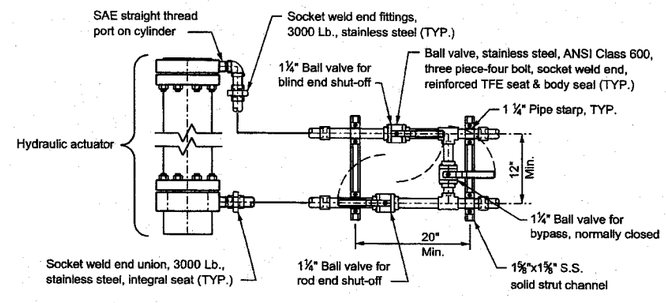

DETAIL "3",
TYPICAL HYDRAULIC
CONNECTION SCHEMATIC
NOT TO SCALE

DATE	MK	DESCRIPTION
10/17/11	1	Revised Project Name and Project ID No.

REVISIONS

REGISTERED PROFESSIONAL ENGINEER — PETER S. CHANG — NO. 29732 — EXP. 6/30/2012 — MECHANICAL — STATE OF CALIFORNIA

PROJECT ENGINEER — DATE 10/17/2012

M - 2

COUNTY OF LOS ANGELES DEPARTMENT OF PUBLIC WORKS

EATON WASH DAM AND RESERVOIR

1 INLET/OUTLET WORKS REHABILITATION

MECHANICAL EQUIPMENT LAYOUT

FCC0001213	1 PCA X5009677	DWG 24A-D65.19	SHEET 19 OF 33

PS-07 5/99

DRAFTER O. PONGPUN | DESIGNER O. PONGPUN | CHECKER P. CHANG | CADD PROJECT FILE NAME FCC0001213-MECH.DGN | REVIEWED BY P. CHANG | DATE

DATE: 10/17/12 TIME: 07:19:45 FILE: 0FILE0

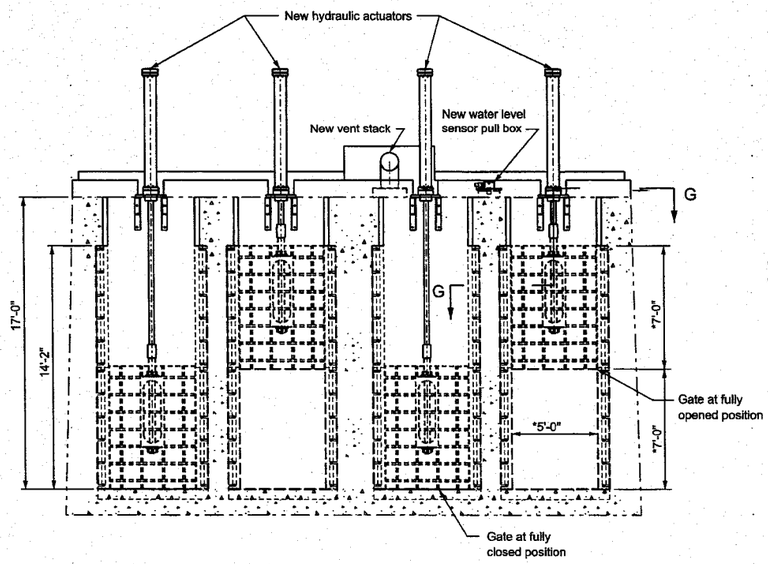

SECTION F-F (M-2),
5'Wx7'H CAST-IRON SLIDE GATES
AND ACTUATORS
SCALE: 1/4" = 1'-0"

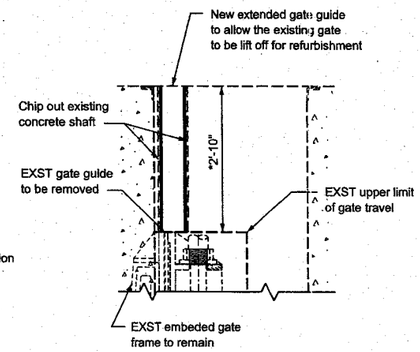

SECTION H-H
SCALE: 3/4" = 1'-0"

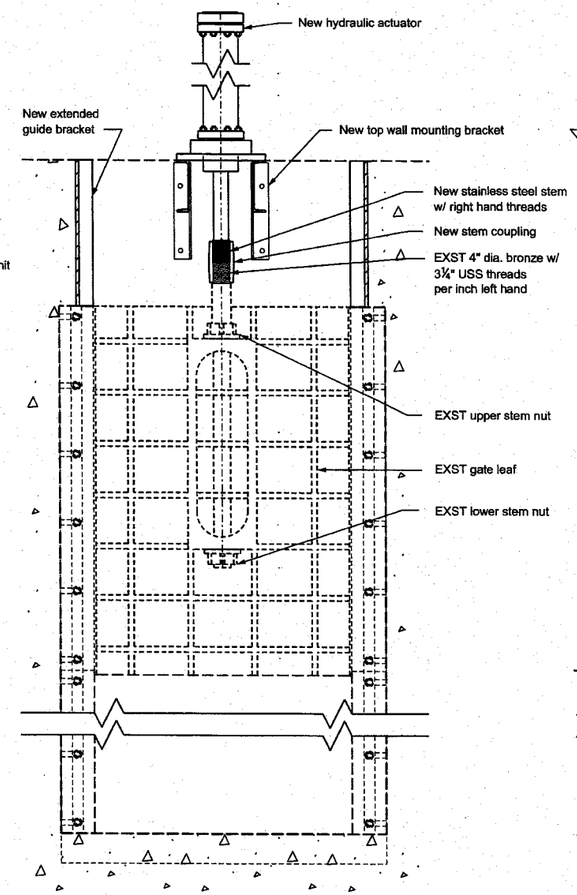

SECTION I-I
SCALE: 3/4" = 1'-0"

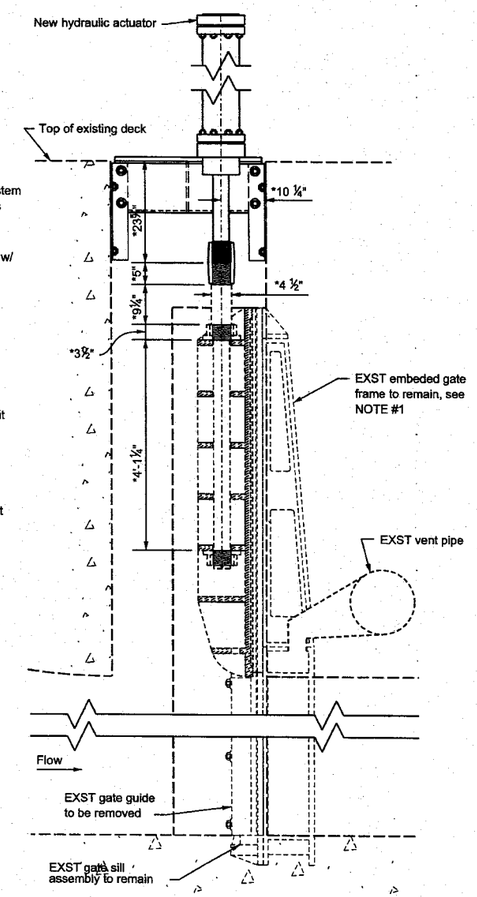

SECTION J-J
SCALE: 3/4" = 1'-0"

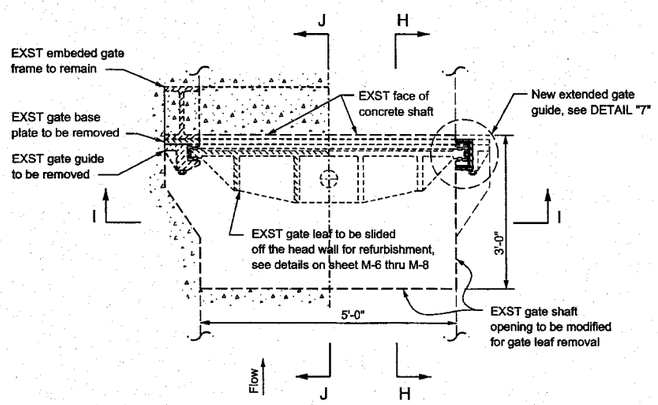

SECTION G-G,
5'WX7'H CAST-IRON SLIDE GATE LAYOUT
SCALE: 3/4" = 1'-0"

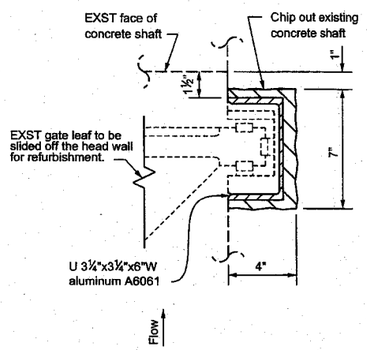

DETAIL "7", TYPICAL NEW
EXTENDED GATE GUIDE
NOT TO SCALE

NOTES:
1. The Contractor shall remove and recoat the existing coats on the embeded gate frames.
   The existing paint system on the gate assemblies contains lead based paint.
   The Contractor shall refer to the Special Provisions for requirements regarding lead based paint.

DATE	MK	DESCRIPTION
10/17/11	1	Revised Project Name and Project ID No.

REVISIONS

REGISTERED PROFESSIONAL ENGINEER PETER S. CHANG NO. 29732 EXP. 9/30/2012 MECHANICAL STATE OF CALIFORNIA
PROJECT ENGINEER 11/17/2011 DATE

M - 3

COUNTY OF LOS ANGELES DEPARTMENT OF PUBLIC WORKS

EATON WASH DAM AND RESERVOIR

1 INLET/OUTLET WORKS REHABILITATION

5'Wx7'H CAST-IRON SLIDE GATES
AND ACTUATORS DETAILS

FCC0001213 | 1 | PCA X5009677 | DWG 24A-D65.20 | SHEET 20 OF 33

DRAFTER O.PONGPUN | DESIGNER O.PONGPUN | CHECKER P.CHANG | CADD PROJECT FILE NAME FCC0001213-MECH.DGN | REVIEWED BY P.CHANG | DATE

DATE: $DATE$ TIME: $TIME$ FILE: $FILE$

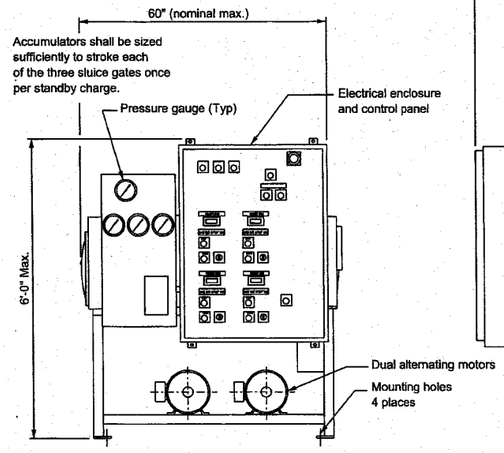

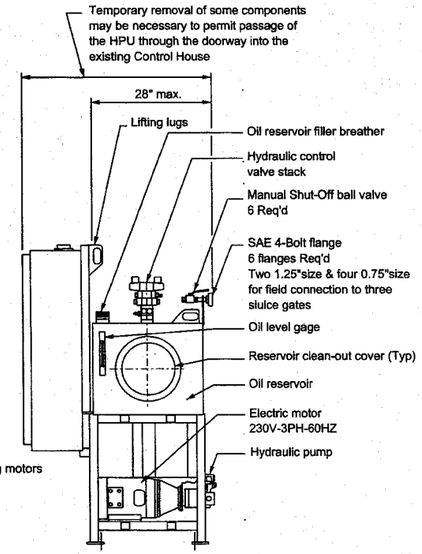

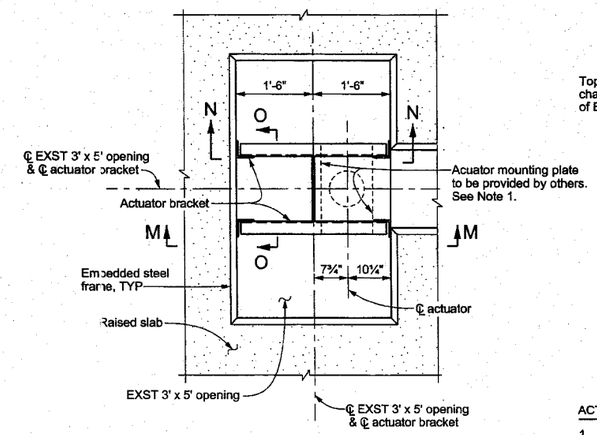

DETAIL "6" (M-2)
ACTUATOR BRACKET PLAN
SCALE: 3/4" = 1'-0"

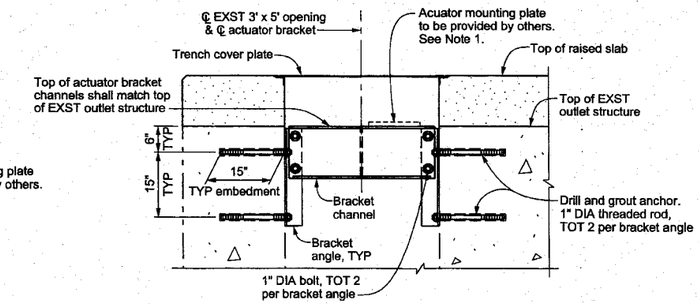

SECTION M-M
SCALE: 3/4" = 1'-0"

ACTUATOR BRACKET - STRUCTURE NOTES:

1. Details for the actuator mounting plate shall be provided by the actuator manufacturer. The actuator mounting plate details, including dimension and method of attachment to the actuator bracket shall be approved by the Agency prior to ordering materials and fabricating the actuator bracket.
2. Steel for the actuator bracket shall conform to ASTM A36. Steel shall be hot-dip galvanized after fabrication.
3. Threaded anchor rods shall be 304 stainless steel with 304 SS nut and washer.
4. Bolts conform to ASTM A325, and include nut and washer.

HYDRAULIC POWER UNIT NOTES:

1. 2000 P.S.I. operating pressure
2. HPU shall operate one 72"x72" and two 24"x24" sluice gates at nominal speed of 12" to 14" per minute.
3. Gate position sensor shall be flow-meter based, installed in the hydraulic oil flow path between directional control valve and hydraulic cylinder.
4. Digital display shall show gate position in percentage open.
5. Gate positionn shall be translated via 4-20 mA or a voltage signal.
6. Hydraulic oil shall be Mobil DTE 24.
7. Panel mounted system pressure gauge shall be provided for system pressure and individual cylinder pressures.

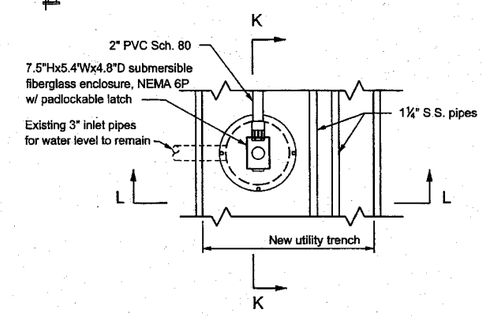

DETAIL "4" (M-2)
WATER LEVEL PULL BOX
SCALE: 3/4" = 1'-0"

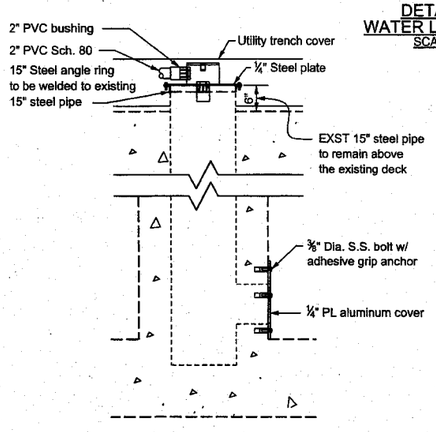

SECTION K-K
SCALE: 3/4" = 1'-0"

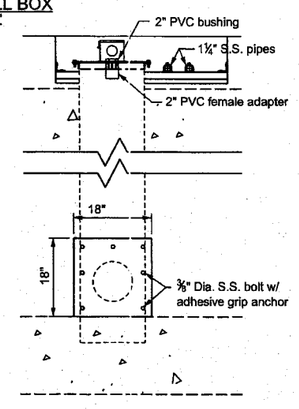

SECTION L-L
SCALE: 3/4" = 1'-0"

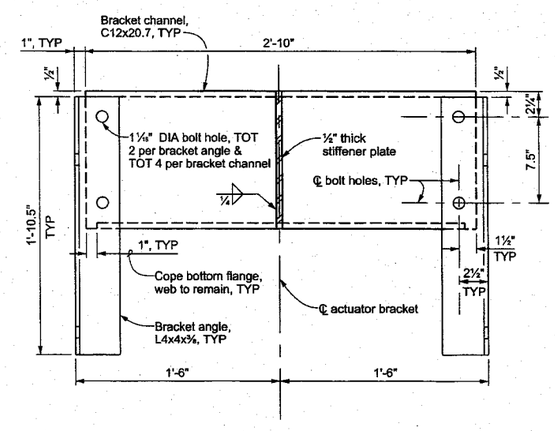

SECTION N-N
SCALE: 2" = 1'-0"

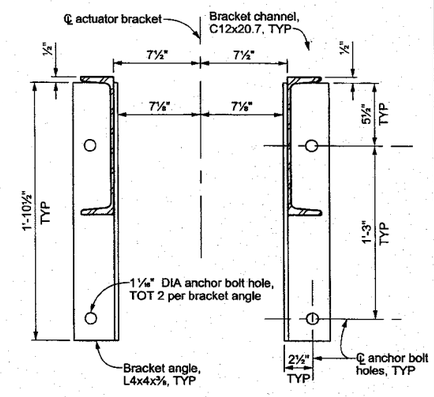

SECTION O-O
SCALE: 2" = 1'-0"

M - 4

DATE	MK	DESCRIPTION
10/17/11	1	Revised Project Name and Project ID No.

REVISIONS

REGISTERED PROFESSIONAL ENGINEER PETER S. CHANG NO. 29732 EXP. 6/30/2012 MECHANICAL STATE OF CALIFORNIA

PROJECT ENGINEER DATE 10/14/2011

COUNTY OF LOS ANGELES DEPARTMENT OF PUBLIC WORKS

EATON WASH DAM AND RESERVOIR

1 INLET/OUTLET WORKS REHABILITATION

HYDRAULIC POWER UNIT AND WATER LEVEL PULL BOX DETAILS

FCC0001213 | 1 | PCA X5009677 | DWG 24A-D65.21 | SHEET 21 OF 33

PS-OF 5/98

DRAFTER O. PONGPUN | DESIGNER O. PONGPUN | CHECKER P. CHANG | CADD PROJECT FILE NAME FCC0001213-MECH.DGN | REVIEWED BY P. CHANG | DATE

DATE. 8DATES TIME. 8TIMES FILE. 8FILES

WAR DEPARTMENT

CORPS OF ENGINEERS, U.S. ARMY

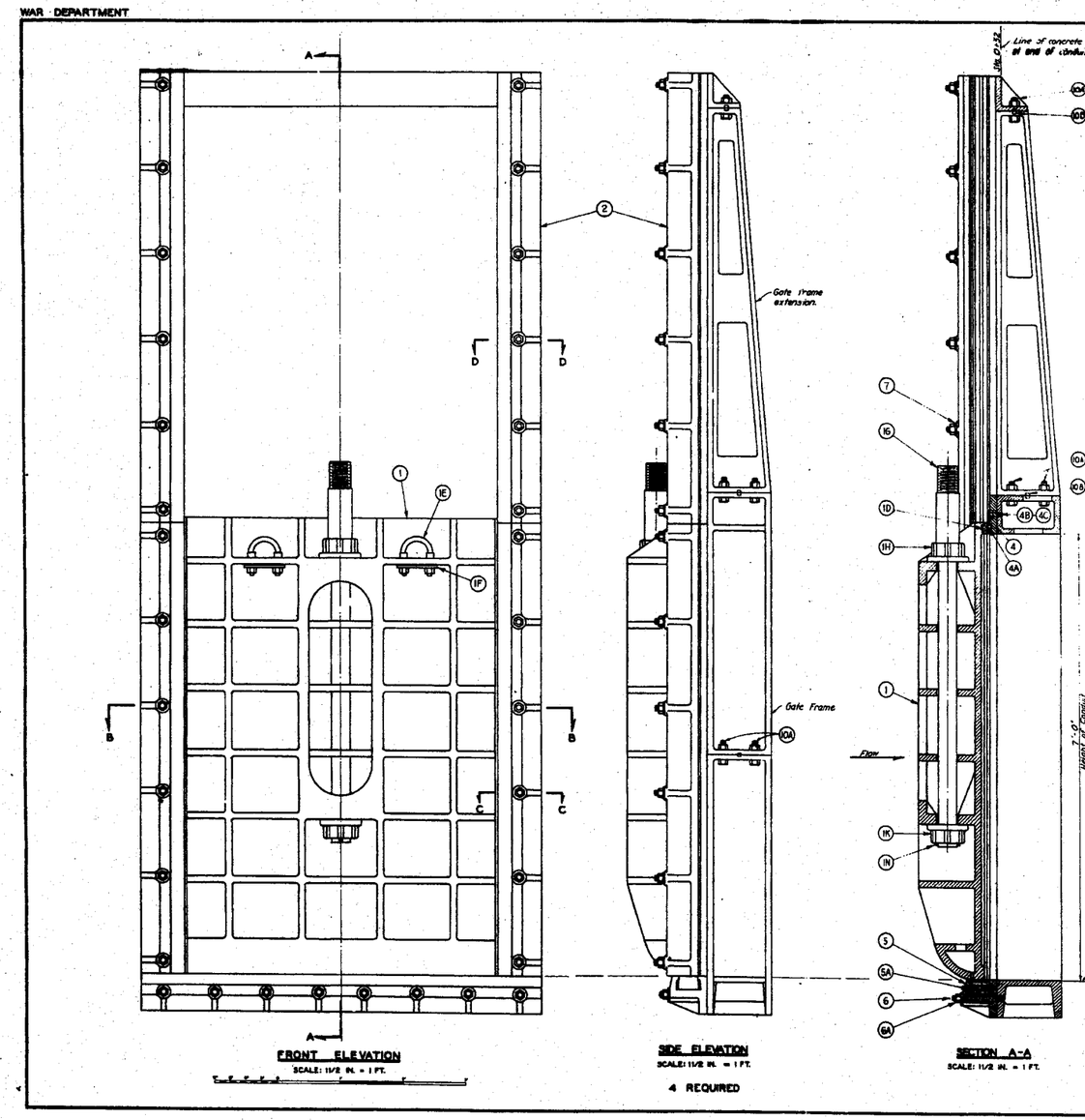

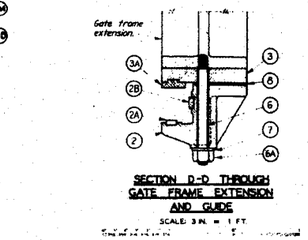

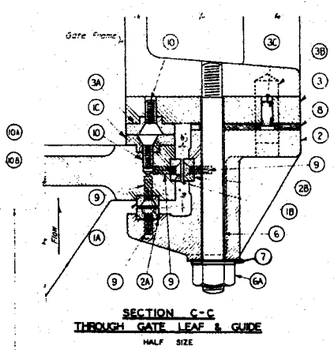

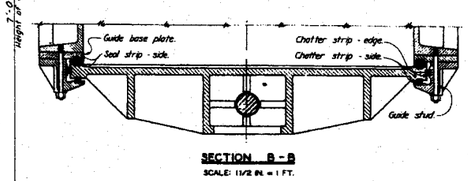

Note: Gate Hoist and lifting stem not detailed. See specifications.

BILL OF MATERIAL

FOR ONE GATE AND FRAME

Item	Description	Material	Req'd
1	Gate leaf	QQ-1-656 Class B	1
1A	Chatter strip - side	Bronze Class C	4
1B	Chatter strip - edge	Bronze Class C	4
1C	Seal strip - side	Bronze Class C	4
1D	Seal strip - top	Bronze Class C	1
1E	Lifting bolt and 2 hex nuts	FF-B-571a Class A	2
1F	Lifting plate	QQ-S-711 Class A	2
1G	Gate leaf stem	Rolled Bronze	1
1H	Upper stem nut	High tensile bronze	1
1K	Lower stem nut	High tensile bronze	1
1L	Eye bolt ½" dia	FF-B-571a Class A	1
1M	Spanner wrench	Steel SAE 1085 one handed	1
1N	Cotter pin ½" dia	Steel	1
2	Gate guide	QQ-1-656 Class B	4
2A	Chatter strip - side	Bronze Class D	4
2B	Chatter strip - edge	Bronze Class D	4
3	Guide base plate	QQ-1-656 Class B	4
3A	Seal strip - side	Bronze Class D	4
3B	Dowel ¾" dia	FF-B-571a Class A	8
3C	Pin ½" dia x 1⅛"	FF-B-571a Class A	24
4	Seal plate	QQ-1-656 Class B	1
4A	Seal strip - top	Bronze Class D	1
4B	Stud ¾" dia x 2½"	QQ-C-591 Hard	6
4C	Nut ¾" dia	QQ-B-636 Hard	6
5	Gate sill	QQ-1-656 Class B	1
5A	Rubber insert	Rubber and brass	1
6	Stud 1" dia x 10½"	QQ-C-591 Hard	32
6A	Nut 1" dia	QQ-B-636 Hard	32
7	Lock washer	QQ-S-711 Class A	24
8	Stem	QQ-B-611	24
9	Screw ¾" dia	QQ-B-636 Soft	132
10	Screw ½" dia	QQ-B-636 Soft	92
10A	Bolt ½"x3½"	FF-B-571a Class A	16
10B	Dowel ¾"x1"	FF-B-571a Class A	8
FOR ONE STEM BRACKET GUIDE & STEM COLLAR GUIDE			
11	Stem Guide bracket	QQ-1-656 Class B	1
12	Stem Guide	QQ-1-656 Class B	1
13	Bolt 1" dia x 3½" & lock washer	FF-B-571a Class A	2
14	Anchor bolt 1" dia x 16"	QQ-C-591 Hard	3
15	Washer 1" dia	QQ-S-711 Class A	8
16-A	Nut 1" dia	QQ-B-636 Hard	3
16	Stem Collar	QQ-1-656 Class B	1
17	Stem Collar guide	QQ-1-656 Class B	1
18	Bolt 1" dia x 4" & lock washer	FF-B-571a Class A	2
19	Anchor bolt 1" dia	QQ-C-591 Hard	2

REFERENCE DRAWINGS

GATE DETAILS.....DWG. SERIAL NO. 279.
GATE FRAME DETAILS.....DWG. SERIAL NO. 280.
GATE ACCESSORY DETAILS.....DWG. SERIAL NO. 281

JOB ORDER NO. 130-3
FEDERAL PROJ. NO. 13-130 (LACFCD. NO. 9)

DATE	REVISION	REV.	CHK.	APR.
1-14-36	Changed item 16 to rolled bronze	[illegible]		[illegible]
2-17-36	Quantities detailed	[illegible]	[illegible]	[illegible]
6-14-36	Sections A-A revised	1.5	[illegible]	[illegible]

LOS ANGELES COUNTY FLOOD CONTROL

EATON WASH DAM

GATE & FRAME ASSEMBLY

SHEET OF SHEETS — SCALE: AS SHOWN

U.S. ENGINEER OFFICE LOS ANGELES, CALIF. JUNE 1, 1936

SUBMITTED BY: [illegible] — APPROVED BY: [illegible]

DRAWN H.D.W. — TRACED [illegible] — CHECKED S.V.O. — TO ACCOMPANY SPECIFICATIONS — DATED

SERIAL NO. 282 — FILE NO. 68/10

M - 5

DATE	MK	DESCRIPTION
10/17/11	1	Revised Project Name and Project ID No.

REVISIONS

REGISTERED PROFESSIONAL ENGINEER — PETER S. CHANG — NO. 29732 — EXP. 9/30/2012 — MECHANICAL — STATE OF CALIFORNIA

PROJECT ENGINEER — DATE

COUNTY OF LOS ANGELES DEPARTMENT OF PUBLIC WORKS

EATON WASH DAM AND RESERVOIR

1 INLET/OUTLET WORKS REHABILITATION

AS-BUILT PLAN FOR GATE AND FRAME ASSEMBLY

FCC0001213	1	PCA X5009677	DWG 24A-D65.22	SHEET 22 OF 33

DRAFTER O. PONGPUN — DESIGNER O. PONGPUN — CHECKER P. CHANG — CADD PROJECT FILE NAME FCC0001213-MECH.DGN — 1 — REVIEWED BY P. CHANG — DATE

DATE: 8DATES TIME: 8TIMES FILE: 8FILES

PS-DF 5/99

WAR DEPARTMENT. CORPS OF ENGINEERS, U.S. ARMY.

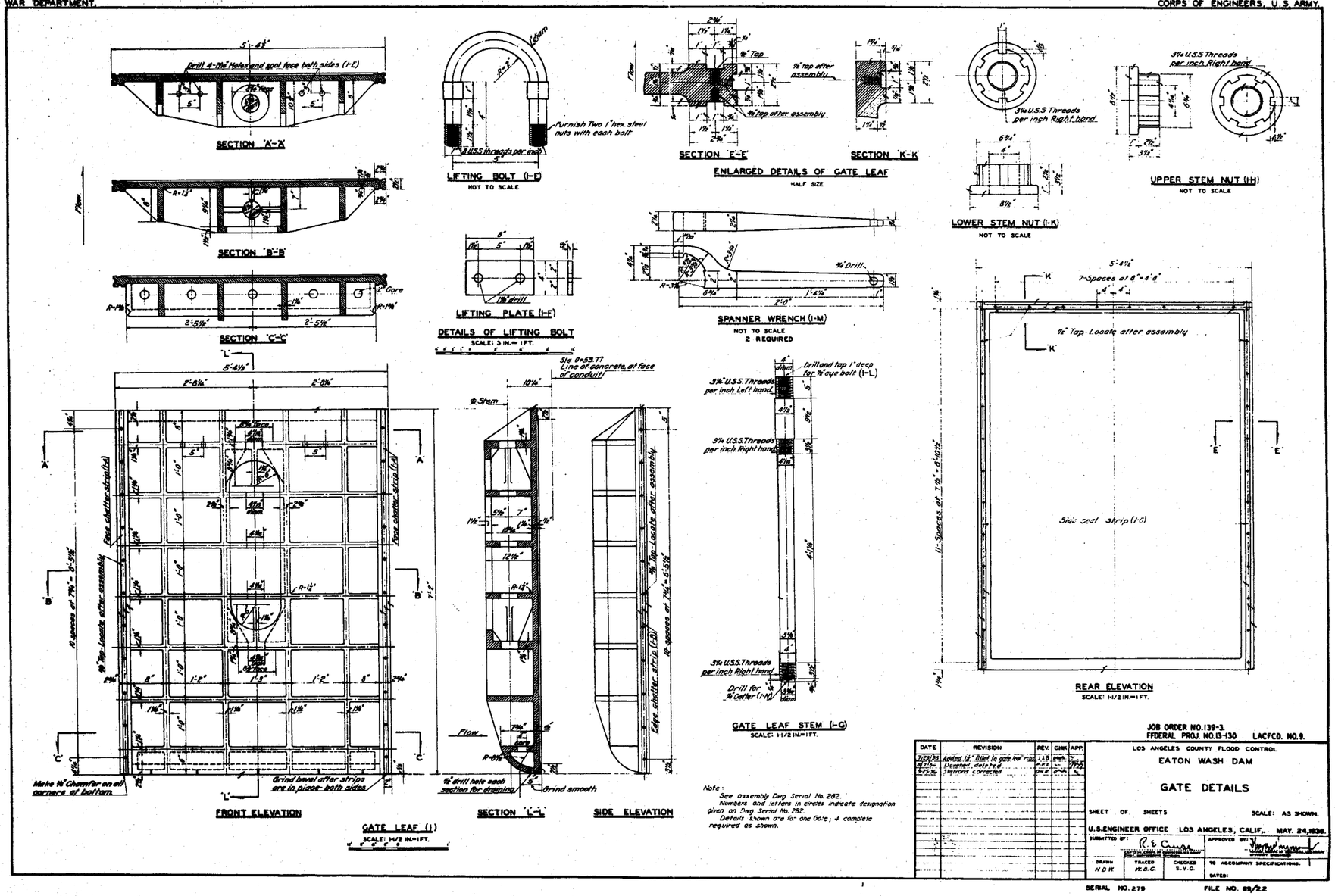

JOB ORDER NO. 139-3
FFDERAL PROJ. NO. 13-130 LACFCD. NO. 9.

DATE	REVISION	REV.	CHK.	APP.
7/23/36	Added 1½" fillet to gate leaf rib	J.J.B.	[illegible]	[illegible]
8/7/36	Dovetail deleted	[illegible]	[illegible]	[illegible]
9-25-36	Stations corrected	[illegible]	[illegible]	[illegible]

LOS ANGELES COUNTY FLOOD CONTROL
EATON WASH DAM
GATE DETAILS
SHEET OF SHEETS SCALE: AS SHOWN.
U.S. ENGINEER OFFICE LOS ANGELES, CALIF., MAY. 24, 1936.
SUBMITTED BY: R. E. Cruse
APPROVED BY: [signature]
DRAWN H.D.W. TRACED W.B.C. CHECKED S.V.O.
TO ACCOMPANY SPECIFICATIONS.
DATED:
SERIAL NO. 279 FILE NO. 69/22

M-6

COUNTY OF LOS ANGELES DEPARTMENT OF PUBLIC WORKS

EATON WASH DAM AND RESERVOIR

△1 INLET/OUTLET WORKS REHABILITATION

AS-BUILT PLAN FOR GATE DETAILS

DATE	MK	DESCRIPTION
10/17/11	△1	Revised Project Name and Project ID No.

REVISIONS

REGISTERED PROFESSIONAL ENGINEER PETER S. CHANG NO. 29732 EXP. 8/30/2012 MECHANICAL STATE OF CALIFORNIA

PROJECT ENGINEER DATE

FCC0001213 △1 PCA X5009677 DWG 24A-D65.23 SHEET 23 OF 33

DRAFTER O. PONGPUN DESIGNER O. PONGPUN CHECKER P. CHANG CADD PROJECT FILE NAME FCC0001213-MECH.DGN △1 REVIEWED BY P. CHANG DATE

DATE: $DATE$ TIME: $TIME$ FILE: $FILE$

WAR DEPARTMENT

CORPS OF ENGINEERS, U.S. ARMY

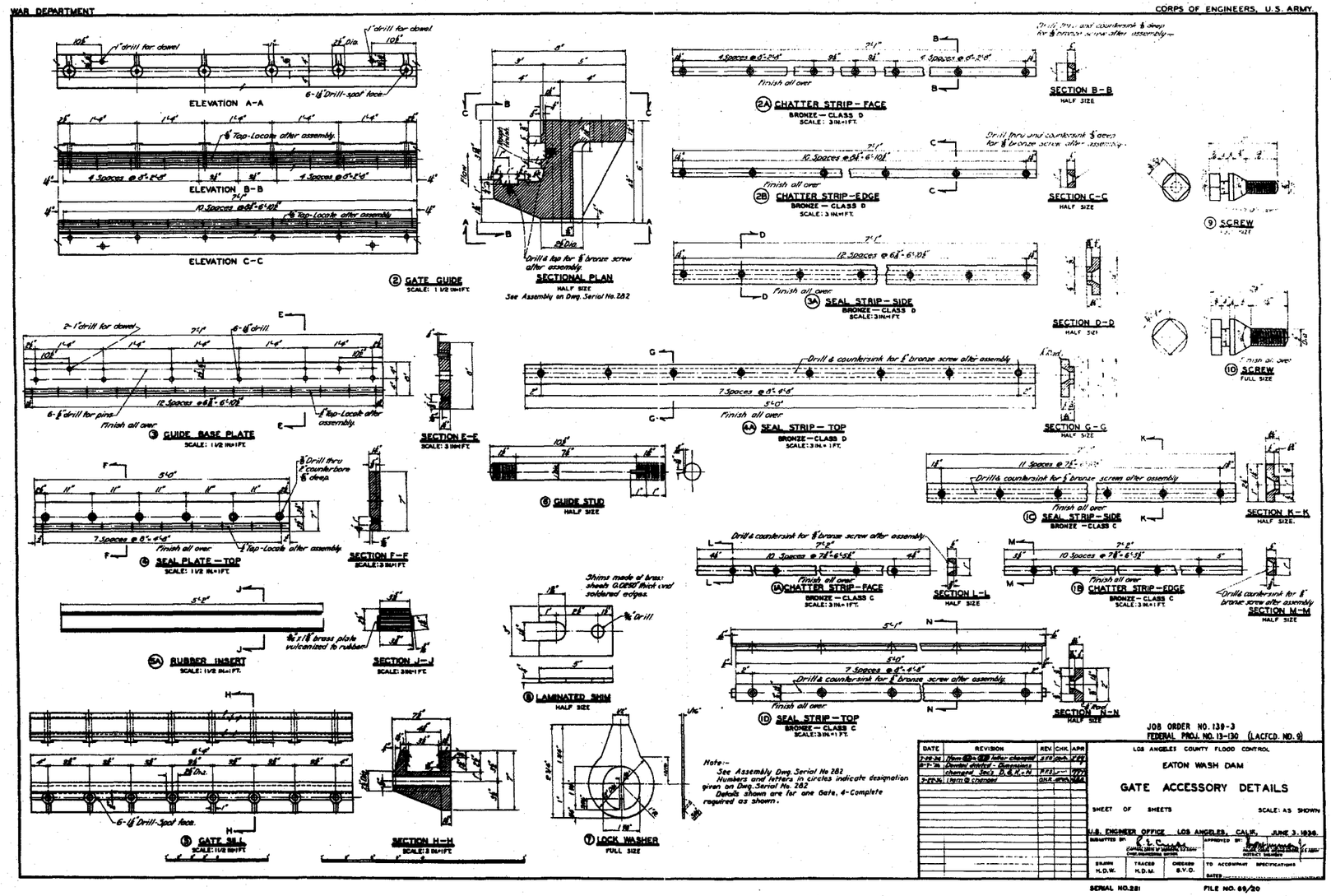

DATE	REVISION	REV.	CHK.	APR.
7-22-36	Item ⑤ Sec. B-B, Infer changed	STD	[illegible]	[illegible]
8-7-36	Dowel added - Elevations changed - Secs. D, E, H, & N	[illegible]	[illegible]	[illegible]
7-22-36	Item ⑨ changed	DNR	[illegible]	[illegible]

M - 7

DATE	MK	DESCRIPTION
10/17/11	1	Revised Project Name and Project ID No.

REVISIONS

REGISTERED PROFESSIONAL ENGINEER
PETER S. CHANG
NO. 29732
EXP. 6/30/2012
MECHANICAL
STATE OF CALIFORNIA

PROJECT ENGINEER DATE

COUNTY OF LOS ANGELES DEPARTMENT OF PUBLIC WORKS

EATON WASH DAM AND RESERVOIR

1 INLET/OUTLET WORKS REHABILITATION

AS-BUILT PLAN FOR GATE ACCESSORY DETAILS

FCC0001213 | 1 | PCA X5009677 | DWG 24A-D65.24 | SHEET 24 OF 33

PS-OF 5/99

DRAFTER O. PONGPUN | DESIGNER O. PONGPUN | CHECKER P. CHANG | CADD PROJECT FILE NAME FCC0001213-MECH.DGN | 1 | REVIEWED BY P. CHANG | DATE

DATE: 8/24/12 TIME: 8:11:16 FILE: 8FILE8

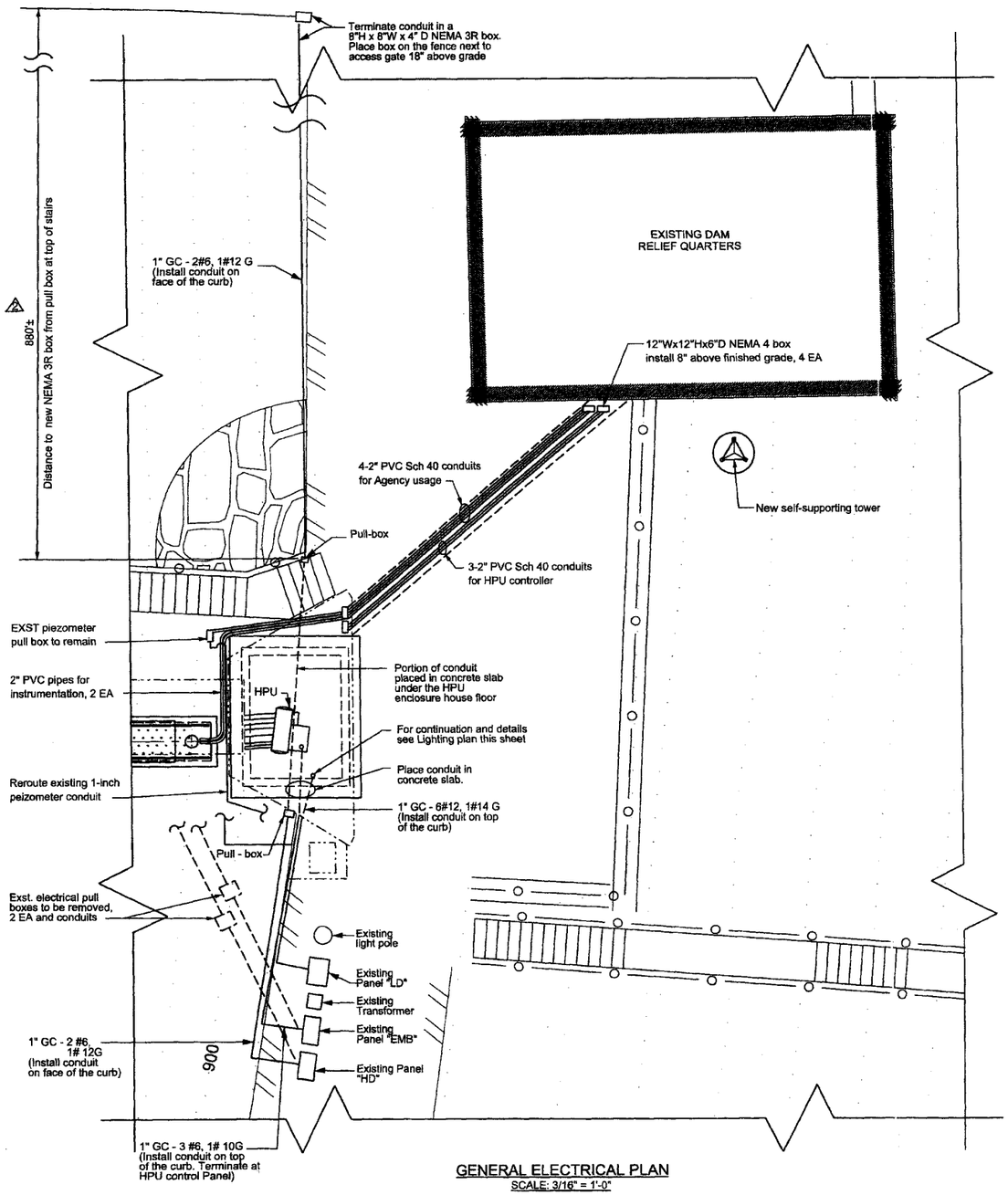

GENERAL ELECTRICAL PLAN
SCALE: 3/16" = 1'-0"

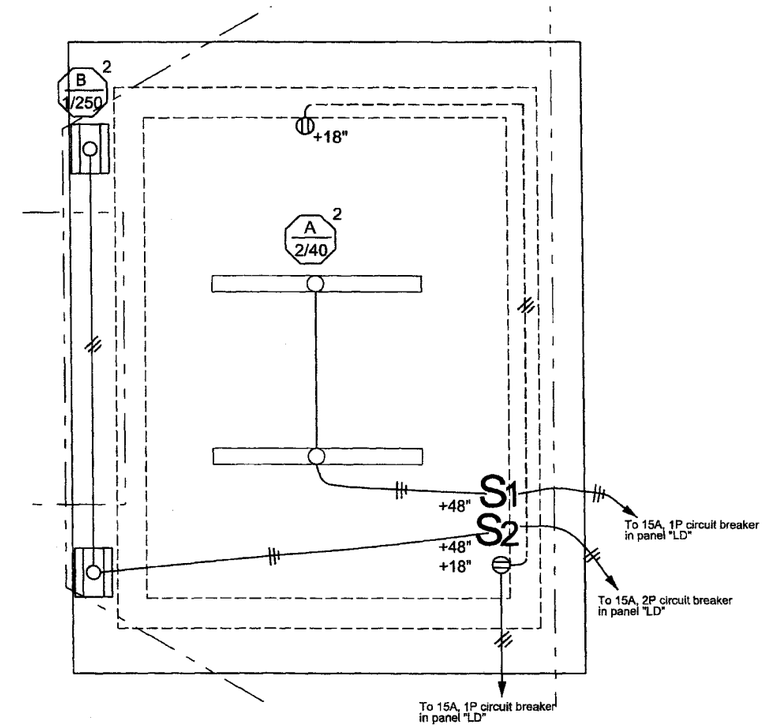

HPU ENCLOSURE LIGHTING PLAN
SCALE: 3/8" = 1'-0"

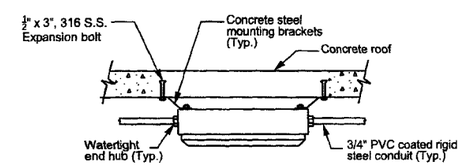

FLUORESCENT FIXTURE MOUNTING DETAIL
NOT TO SCALE

MARK	VOLTAGE	WATTS/ LAMP	DESCRIPTION	REMARKS	DETAIL
A 2/40	120 VAC	40	FLUORESCENT FIXTURE INDUSTRIAL TYPE WITH WHITE ENAMELED REFLECTORS. 2-4' LAMP CONFIGURATION	HUBBEL DMR SERIES EWLD4-2R-SPDR-E1 OR EQUAL	1
B 1/250	208 VAC	250	FLOOD LIGHT FIXTURE, TRUNION - MOUNTED, 250 WATT METAL HALIDE LAMP, INTEGRATED BALLAST, AND POWDERCOAT FINISH	HUBBEL OR EQUAL	

E - 1

DATE	MK	DESCRIPTION
01/12/12	2	Added dimension
10/17/11	1	Revised Project Name and Project ID No.

REVISIONS

REGISTERED PROFESSIONAL ENGINEER MICHAEL TJAN NO. 11832 EXP. 6/30/12 ELECTRICAL STATE OF CALIFORNIA

PROJECT ENGINEER DATE 12/13/10

COUNTY OF LOS ANGELES DEPARTMENT OF PUBLIC WORKS

EATON WASH DAM AND RESERVOIR

~~HEADWORKS REHABILITATION~~

1 INLET/OUTLET WORKS REHABILITATION

HEADWORKS ELECTRICAL INSTALLATIONS

~~FCC0001136~~ FCC0001213 1 | PCA X5009677 | DWG 24A-D65.25 | SHEET 25 OF 33

DRAFTER O. PONGPUN | DESIGNER H. SHALVIRI | CHECKER M. TJAN | CADD PROJECT FILE NAME ~~FCC0001136-ELEC.DGN~~ FCC0001213-ELEC.DGN 1 | REVIEWED BY P. CHANG | DATE

DATE: 8DATE8 TIME: 8TIME8 FILE: 8FILE8

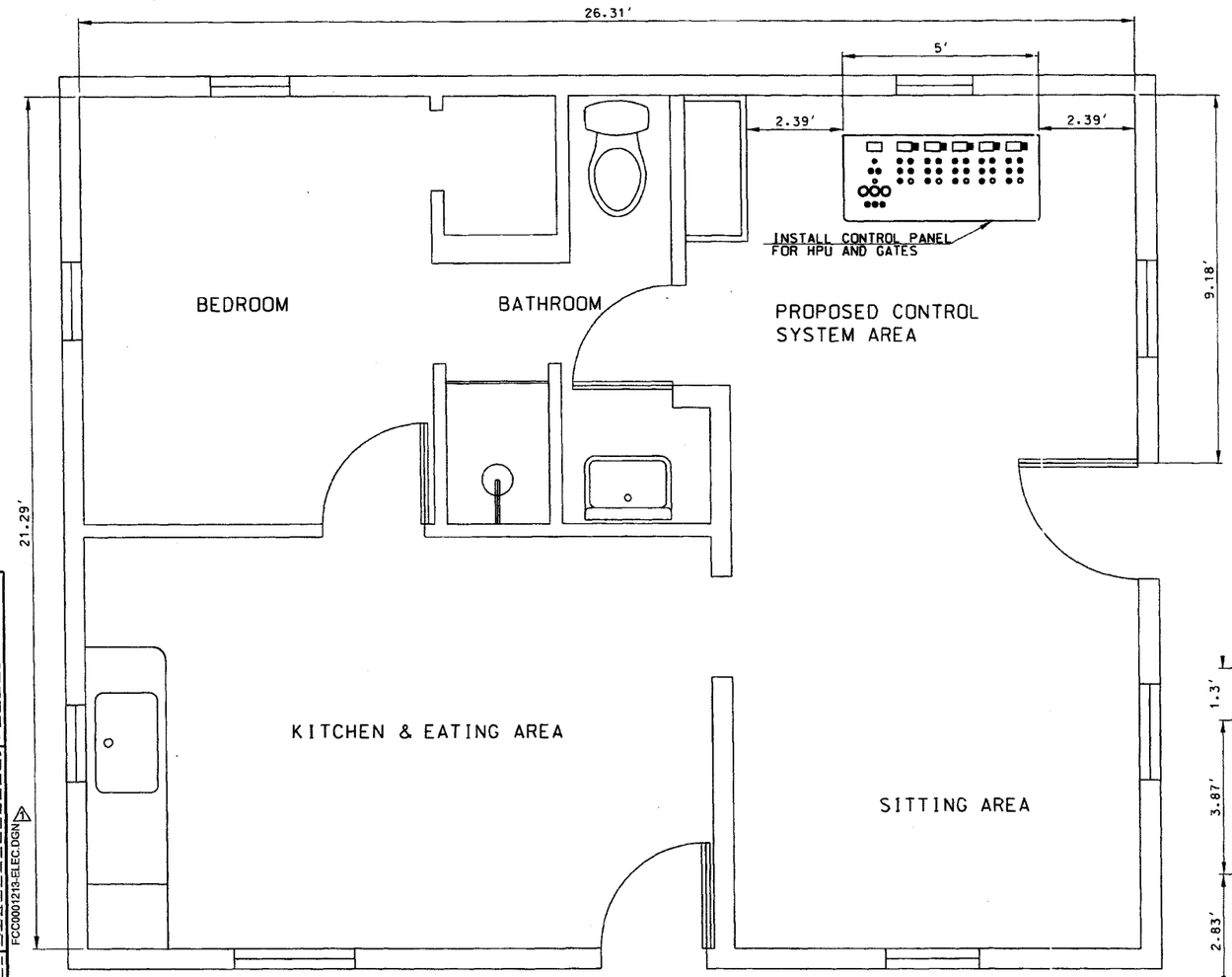

PLAN VIEW
NO SCALE

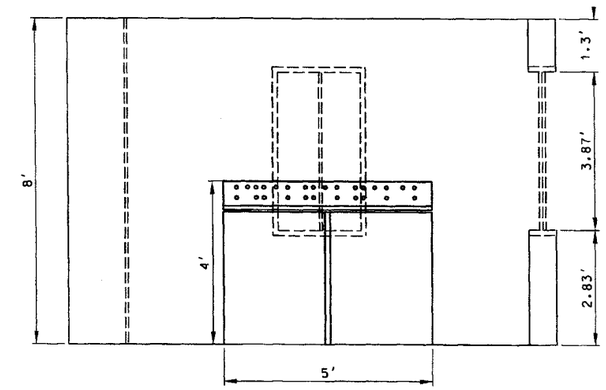

WEST ELEVATION
NO SCALE

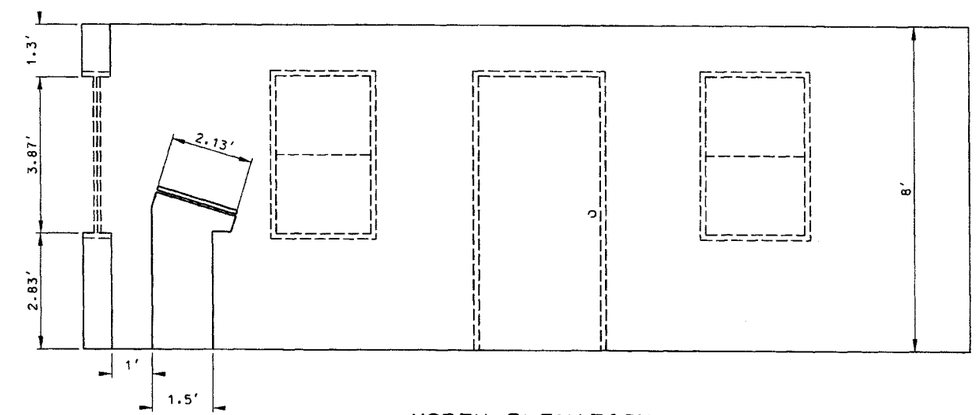

NORTH ELEVATION
NO SCALE

E-2

DATE	MK	DESCRIPTION
10/17/11	1	Revised Project Name and Project ID No

REVISIONS

REGISTERED PROFESSIONAL ENGINEER
MICHAEL TJAN
NO. 11852
EXP. 9/30/12
ELECTRICAL
STATE OF CALIFORNIA

PROJECT ENGINEER DATE 12/15/10

COUNTY OF LOS ANGELES DEPARTMENT OF PUBLIC WORKS

EATON WASH DAM AND RESERVOIR

~~HEADWORKS REHABILITATION~~

1 INLET/OUTLET WORKS REHABILITATION

RELIEF QUARTERS-REMOTE CONTROL SYSTEM
PLAN VIEW AND ELEVATIONS

~~FCC0001106~~	PCA X5009677	DWG 24A-D65.26	SHEET 26 OF 33

FCC0001213 1

DRAFTER | DESIGNER | CHECKER | CADD PROJECT FILE NAME ~~FCC0001106-ELEC.DGN~~ FCC0001213-ELEC.DGN | REVIEWED BY | DATE

DATE: $DATE$ TIME: $TIME$ FILE: $FILE$

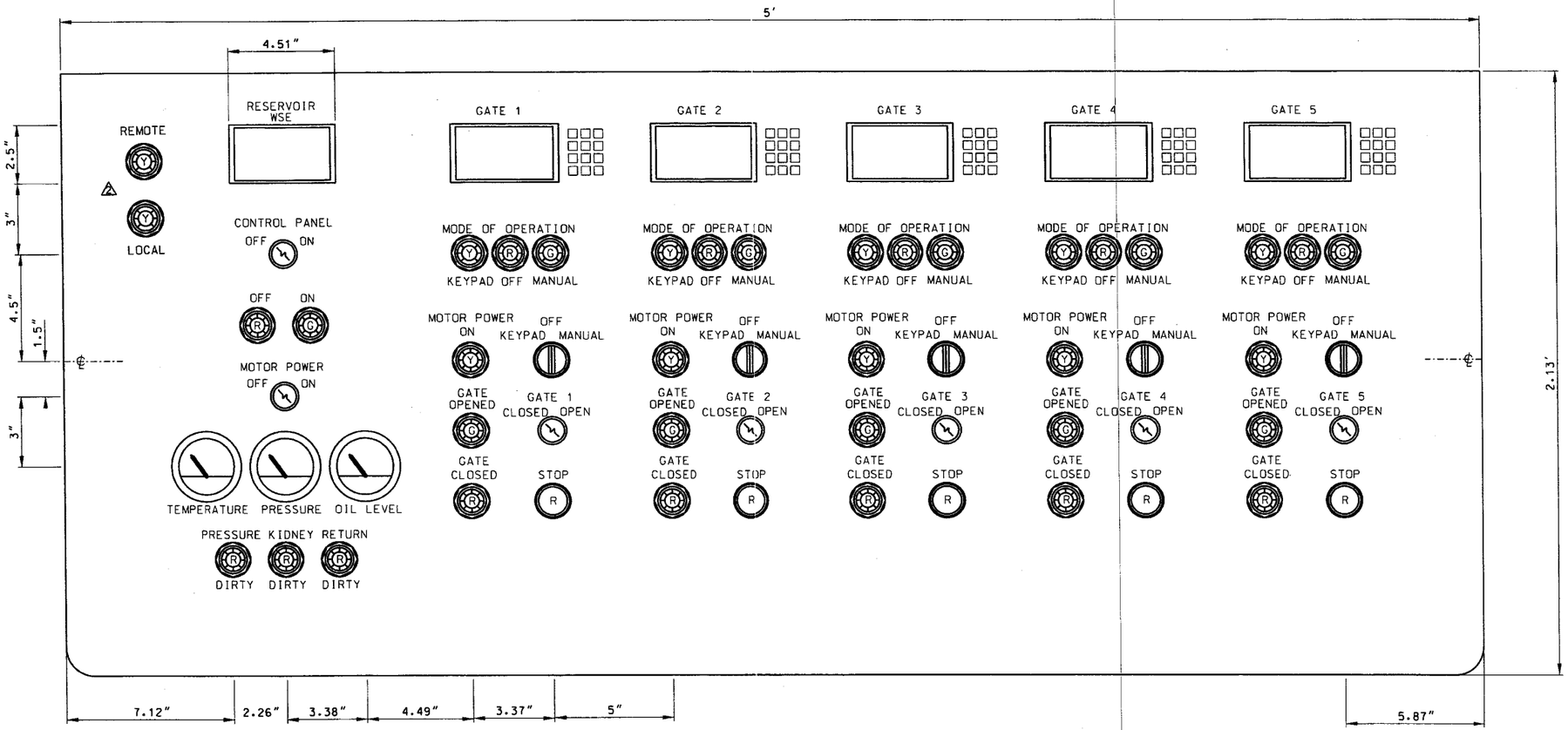

HPU AND GATES DESK CONSOLE (TOP VIEW)
NOT TO SCALE

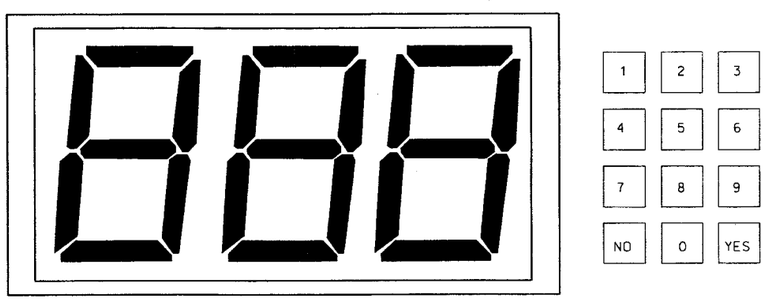

DIGITAL PANEL AND KEYPAD DETAIL
NOT TO SCALE

DATE	MK	DESCRIPTION
01/12/12	2	Added "Remote" & "Local" pilot lights
10/17/11	1	Revised Project Name and Project ID No.

REVISIONS

REGISTERED PROFESSIONAL ENGINEER — MICHAEL TJAN — NO. 11833 — EXP. 6/30/12 — ELECTRICAL — STATE OF CALIFORNIA

PROJECT ENGINEER — DATE 12/14/10

E-3

COUNTY OF LOS ANGELES DEPARTMENT OF PUBLIC WORKS

EATON WASH DAM AND RESERVOIR

~~HEADWORKS REHABILITATION~~

1 INLET/OUTLET WORKS REHABILITATION

RELIEF QUARTERS-REMOTE CONTROL SYSTEM
HPU AND GATES DESK CONSOLE

~~FCC0001106~~ FCC0001213 1 | PCA X5009677 | DWG 24A-D65.27 | SHEET 27 OF 33

DRAWTER | DESIGNER | CHECKER | CADD PROJECT FILE NAME ~~FCC0001106-ELEC.DGN~~ FCC0001213-ELEC.DGN 1 | REVIEWED BY | DATE

DATE: $DATE$ TIME: $TIME$ FILE: $FILE$

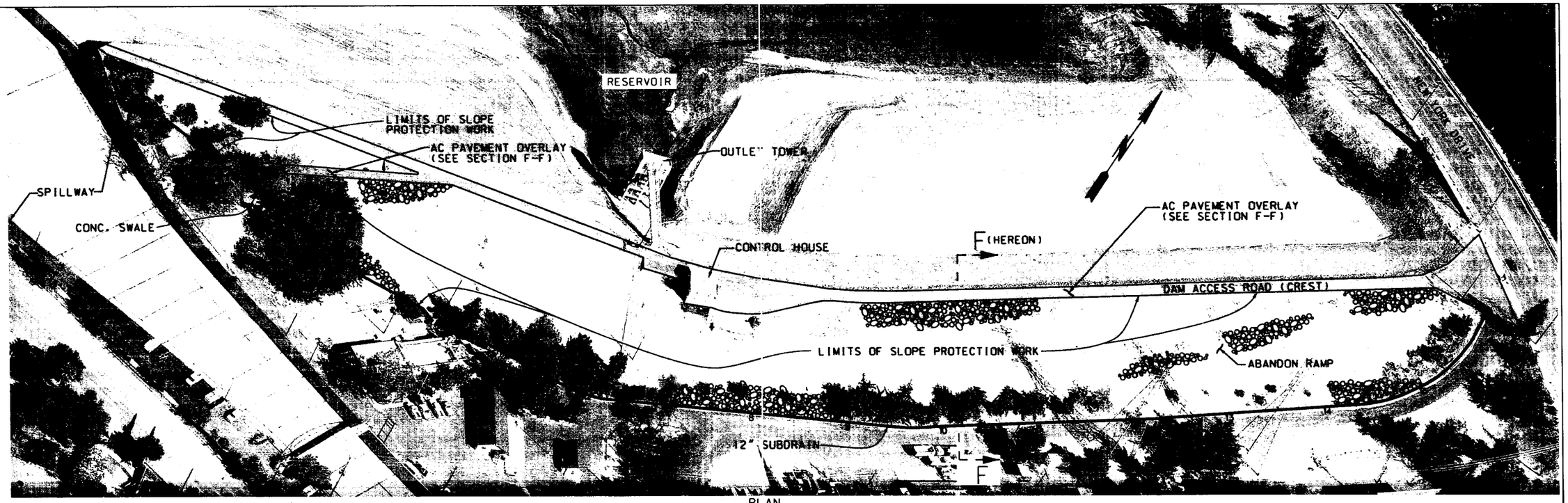

PLAN
SCALE: 1" = 60'
30 0 60 120

INDEX TO STANDARD PLAN

STANDARDS PLANS FOR PUBLIC WORKS CONSTRUCTION, 2006 EDITION
120-1 CURB AND GUTTER-BARRIER
321-1 MANHOLE PIPE TO PIPE 33" OR SMALLER
606-2 METAL HAND RAILINGS
640-2 REINFORCED CONCRETE STAIRWAY

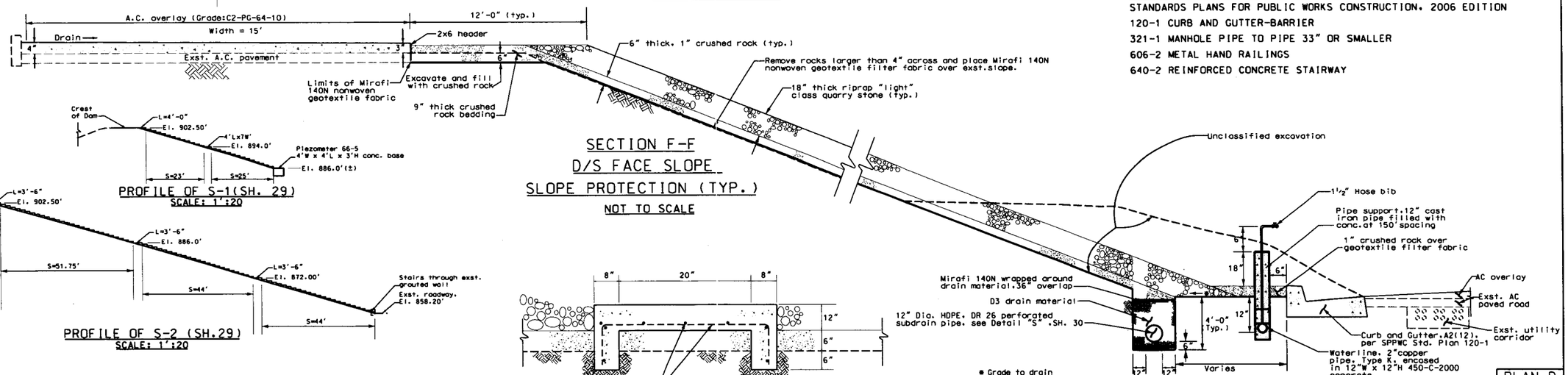

SECTION F-F
D/S FACE SLOPE
SLOPE PROTECTION (TYP.)
NOT TO SCALE

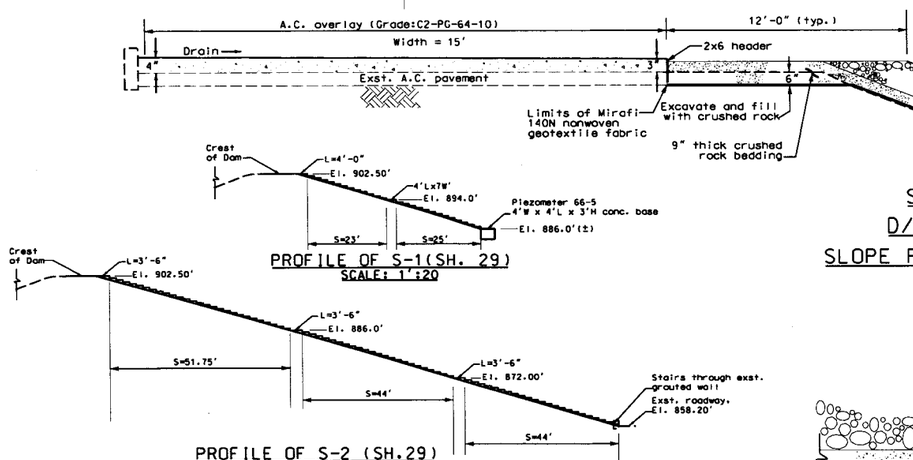

PROFILE OF S-1(SH. 29)
SCALE: 1':20

PROFILE OF S-2 (SH.29)
SCALE: 1':20

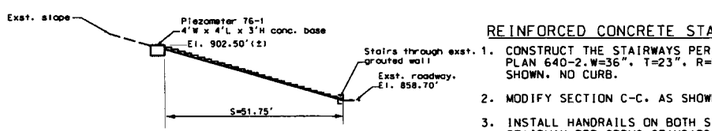

PROFILE OF S-3 (SH. 29)
SCALE: 1':20

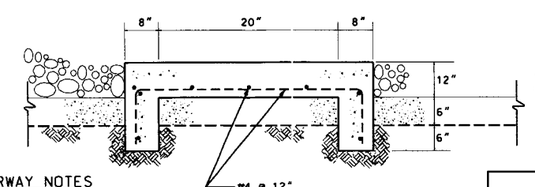

MODIFIED SECTION C-C
(SEE NOTE 2 AND SH.30)
R.C. STAIRWAY
SCALE: 1':20

REINFORCED CONCRETE STAIRWAY NOTES

1. CONSTRUCT THE STAIRWAYS PER SPPWC STANDARD PLAN 640-2.W=36", T=23", R=7", L AND S AS SHOWN. NO CURB.
2. MODIFY SECTION C-C. AS SHOWN HEREON.
3. INSTALL HANDRAILS ON BOTH SIDES OF THE STAIRWAY PER SPPWC STANDARD PLAN 606-2, TYPE A.
4. STAIR DIMENSIONS SHALL BE FIELD ADJUSTED TO MEET SITE CONDITIONS

DATE	MK	DESCRIPTION
10/17/11	1	Revised Project Name and Project ID No.

REVISIONS

REGISTERED PROFESSIONAL ENGINEER — NOLI LASAO — No. C60956 — CIVIL — STATE OF CALIFORNIA

PROJECT ENGINEER — DATE 11/22/11

COUNTY OF LOS ANGELES DEPARTMENT OF PUBLIC WORKS

EATON WASH DAM AND RESERVOIR
DOWNSTREAM SLOPE PROTECTION
PLAN AND SECTION

PLAN D

FCC0001213 | PCA X5009677 | DWG 24A-D65.28 | SHEET 28 OF 33

DRAFTER N. LASAO | DESIGNER N. LASAO | CHECKER A. ZANDIEH | CADD PROJECT FILE NAME FCC0001213.DGN | REVIEWED | DATE 11/22/11

DATE: @DATE@ TIME: @TIME@ FILE: @FILE@

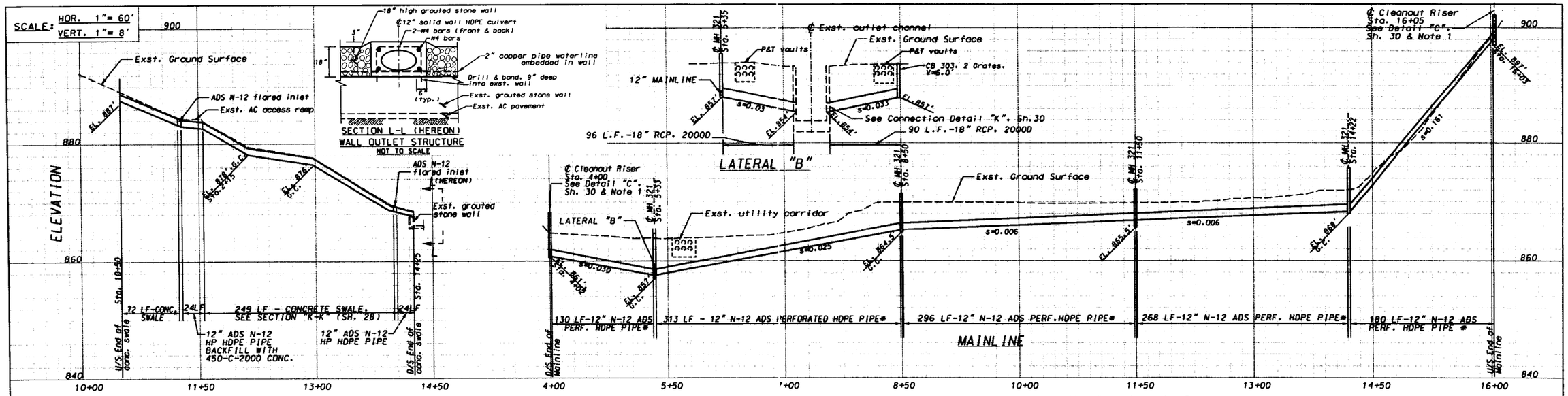

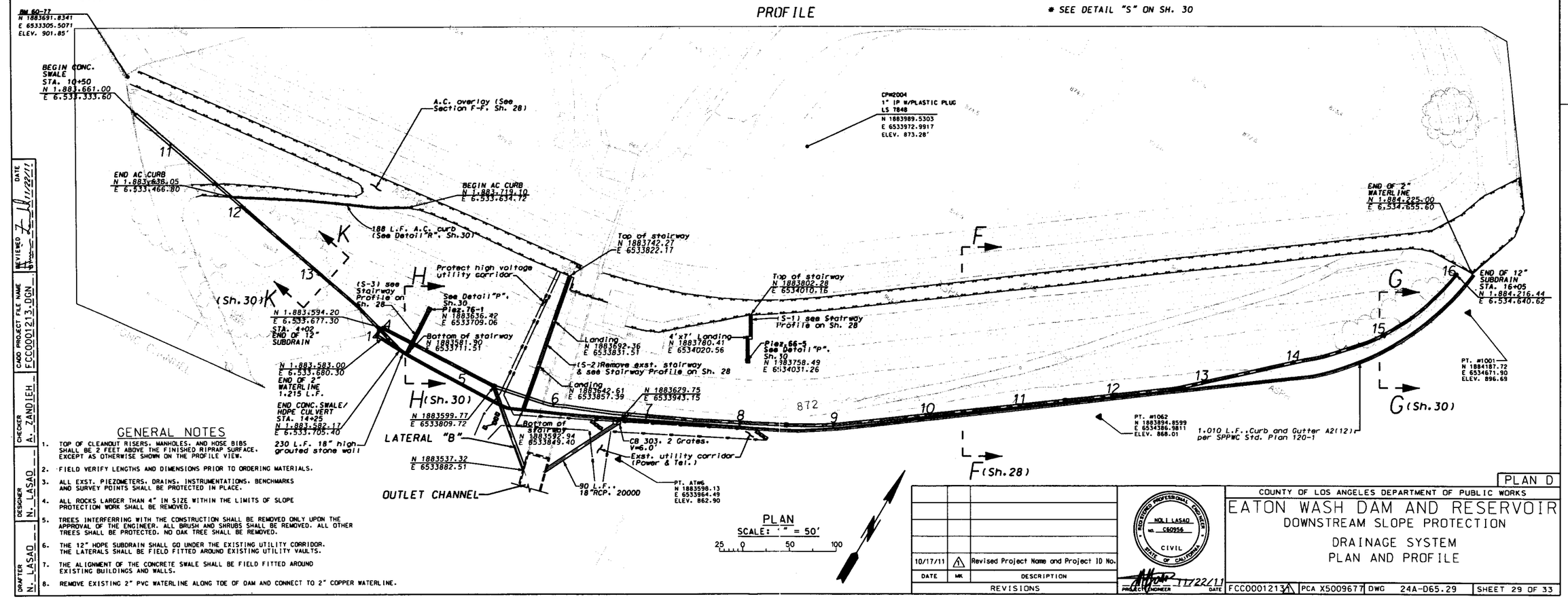

GENERAL NOTES

1. TOP OF CLEANOUT RISERS, MANHOLES, AND HOSE BIBS SHALL BE 2 FEET ABOVE THE FINISHED RIPRAP SURFACE, EXCEPT AS OTHERWISE SHOWN ON THE PROFILE VIEW.
2. FIELD VERIFY LENGTHS AND DIMENSIONS PRIOR TO ORDERING MATERIALS.
3. ALL EXST. PIEZOMETERS, DRAINS, INSTRUMENTATIONS, BENCHMARKS AND SURVEY POINTS SHALL BE PROTECTED IN PLACE.
4. ALL ROCKS LARGER THAN 4" IN SIZE WITHIN THE LIMITS OF SLOPE PROTECTION WORK SHALL BE REMOVED.
5. TREES INTERFERRING WITH THE CONSTRUCTION SHALL BE REMOVED ONLY UPON THE APPROVAL OF THE ENGINEER. ALL BRUSH AND SHRUBS SHALL BE REMOVED. ALL OTHER TREES SHALL BE PROTECTED. NO OAK TREE SHALL BE REMOVED.
6. THE 12" HDPE SUBDRAIN SHALL GO UNDER THE EXISTING UTILITY CORRIDOR. THE LATERALS SHALL BE FIELD FITTED AROUND EXISTING UTILITY VAULTS.
7. THE ALIGNMENT OF THE CONCRETE SWALE SHALL BE FIELD FITTED AROUND EXISTING BUILDINGS AND WALLS.
8. REMOVE EXISTING 2" PVC WATERLINE ALONG TOE OF DAM AND CONNECT TO 2" COPPER WATERLINE.

DRAFTER	N. LASAO
DESIGNER	N. LASAO
CHECKER	A. ZANDIEH
CADD PROJECT FILE NAME	FCC0001213.DGN
REVIEWED	DATE 11/22/11

DATE	MK	DESCRIPTION
10/17/11	1	Revised Project Name and Project ID No.

REVISIONS

REGISTERED PROFESSIONAL ENGINEER — NOLI LASAO — NO. C60956 — CIVIL — STATE OF CALIFORNIA

PROJECT ENGINEER — DATE 11/22/11

PLAN D

COUNTY OF LOS ANGELES DEPARTMENT OF PUBLIC WORKS

EATON WASH DAM AND RESERVOIR

DOWNSTREAM SLOPE PROTECTION

DRAINAGE SYSTEM PLAN AND PROFILE

FCC0001213 | PCA X5009677 | DWG 24A-D65.29 | SHEET 29 OF 33

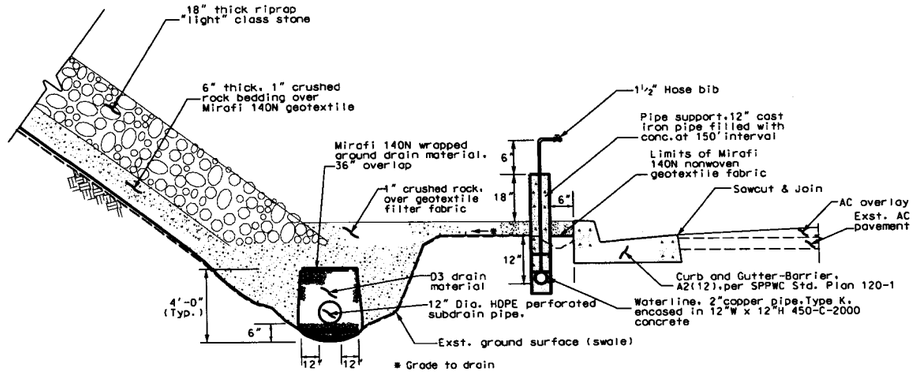

SECTION G-G (SH.29)
SUBDRAIN DETAILS (TYP.)
STA. 14+50 TO STA. 16+00
NOT TO SCALE

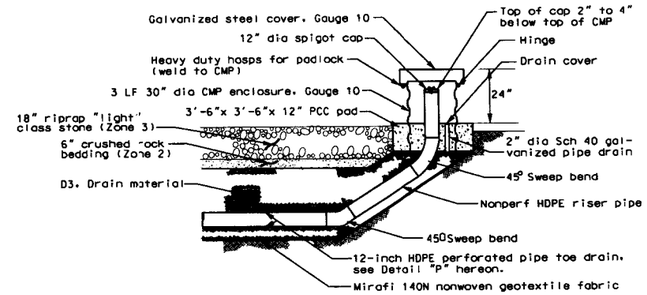

DETAIL "C"(SH. 29)
CLEANOUT RISER
NOT TO SCALE

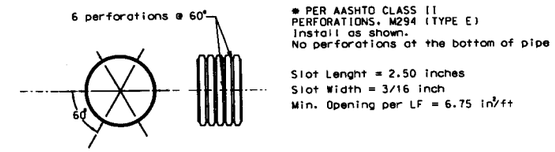

DETAIL "S"(SH. 29)
12" SLOTTED HDPE
PIPE SUBDRAIN *
NOT TO SCALE

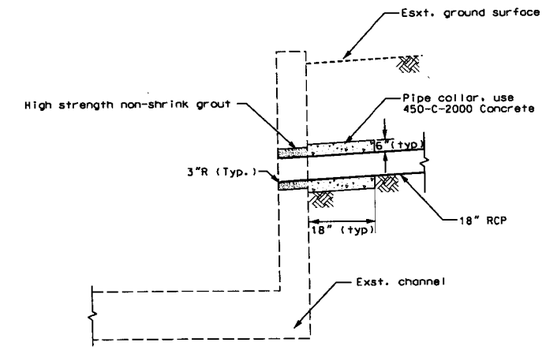

DETAIL "K" (SH. 29)
18" RCP CONNECTION
TO EXST. CHANNEL
NOT TO SCALE

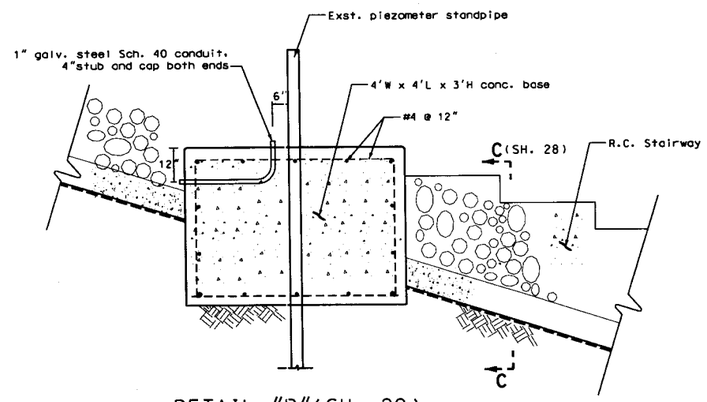

DETAIL "P"(SH. 29)
PIEZOMETER BASE
NOT TO SCALE

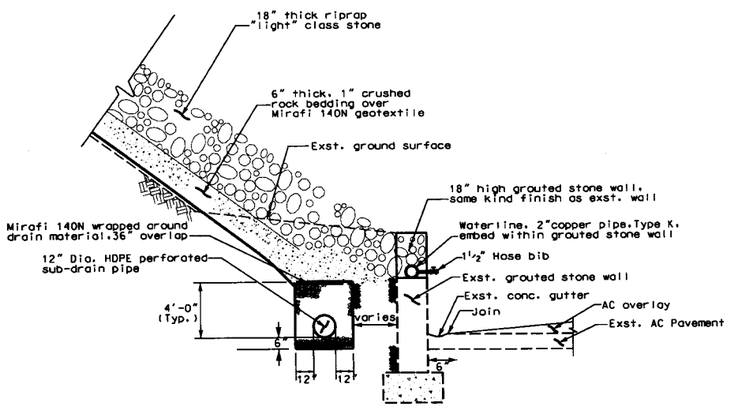

SECTION H-H (SH. 29)
SUBDRAIN DETAILS (TYP.)
STA. 4+00 TO STA. 6+20
NOT TO SCALE

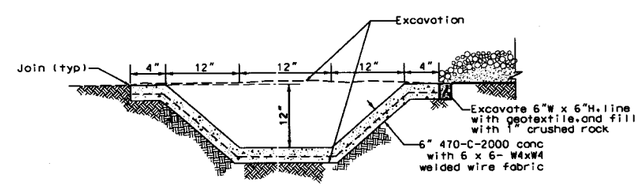

SECTION K-K (SH. 29)
CONCRETE SWALE
NOT TO SCALE

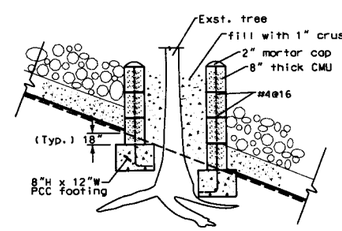

SECTION D-D
TREE WELL
NOT TO SCALE

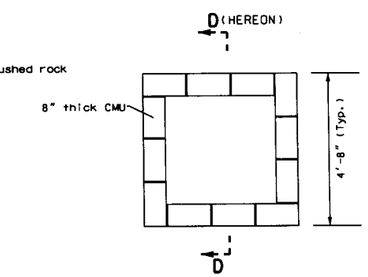

PLAN
TREE WELL
NOT TO SCALE

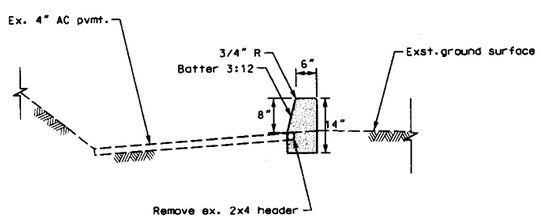

DETAIL "R" (SH. 29)
A.C. CURB
NOT TO SCALE

DATE	MK	DESCRIPTION
10/17/11	1	Revised Project Name and Project ID No.

REVISIONS

REGISTERED PROFESSIONAL ENGINEER NOLI LASAO No. C60956 CIVIL STATE OF CALIFORNIA
PROJECT ENGINEER 11/22/11 DATE

PLAN D

COUNTY OF LOS ANGELES DEPARTMENT OF PUBLIC WORKS

EATON WASH DAM AND RESERVOIR
DOWNSTREAM SLOPE PROTECTION

SECTIONS AND DETAILS

FCC0001213 1 | PCA X5009677 | DWG 24A-D65.30 | SHEET 30 OF 33

DRAFTER N. LASAO | DESIGNER N. LASAO | CHECKER A. ZANDIEH | CADD PROJECT FILE NAME FCC0001213.DGN | REVIEWED | DATE 11/22/11

DATE: $DATE$ TIME: $TIME$ FILE: $FILE$

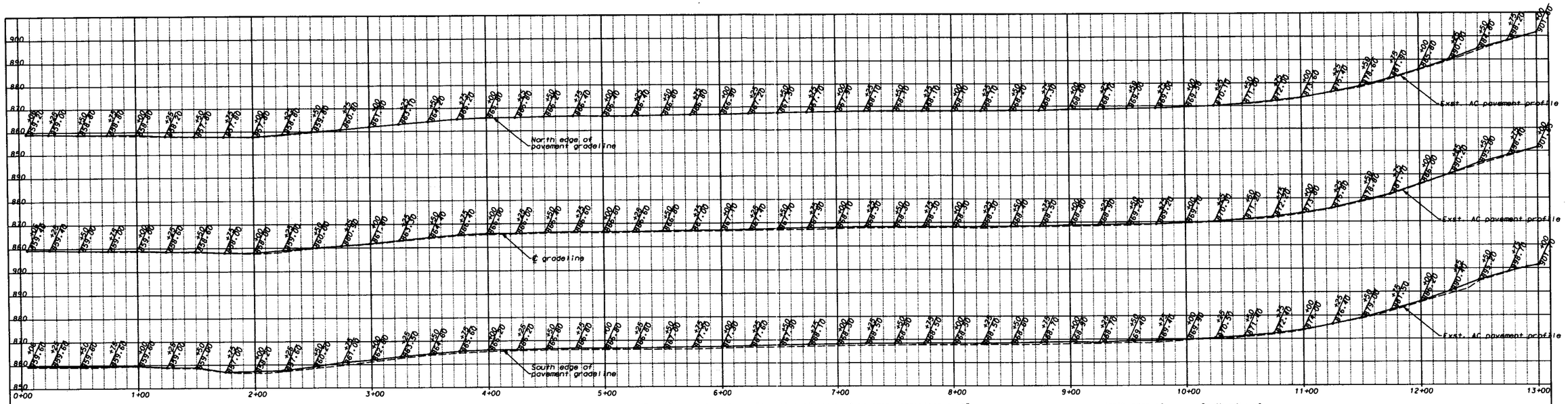

Top of curb elevation = Elevation of north AC pavement gradeline + 10"

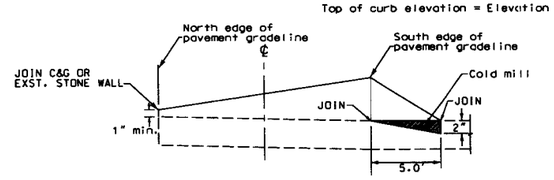

TYP. CROSS SECTION
STA. 6+65 STA.0+06

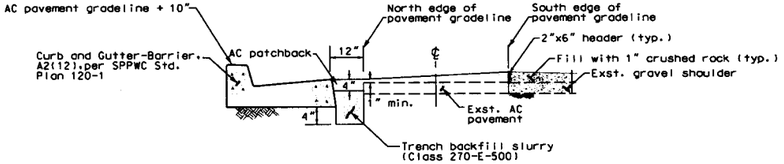

TYP. CROSS SECTION
STA. 6+65 STA.13+00

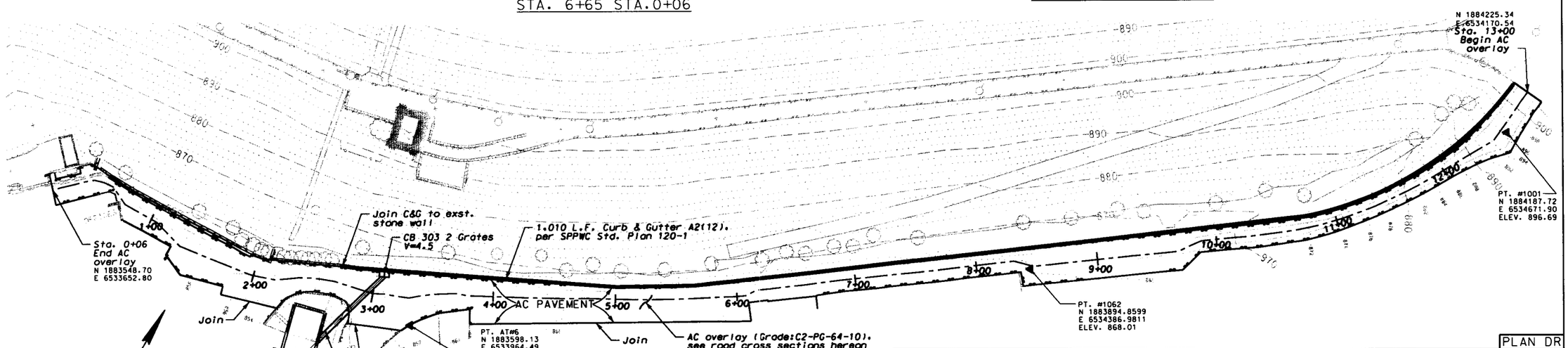

PLAN
SCALE: 1" = 40'

20 0 40 80

DATE	BY	REVIEWED
11/22/11		

CADD PROJECT FILE NAME: FCC0001213.DGN

CHECKER: A. ZANDIEH

DESIGNER: N. LASAO

DRAFTER: N. LASAO

DATE	MK	DESCRIPTION
10/17/11	1	Revised Project Name and Project ID No.

REVISIONS

REGISTERED PROFESSIONAL ENGINEER — NOLI LASAO — C60956 — CIVIL — STATE OF CALIFORNIA

PROJECT ENGINEER — DATE 11/22/11

PLAN DR

COUNTY OF LOS ANGELES DEPARTMENT OF PUBLIC WORKS

EATON WASH DAM AND RESERVOIR

DOWNSTREAM SLOPE PROTECTION

ROAD AC OVERLAY

PLAN, PROFILES, AND AND CROSS SECTIONS

FCC0001213 | PCA X5009677 | DWG 24A-D65.31 | SHEET 31 OF 33

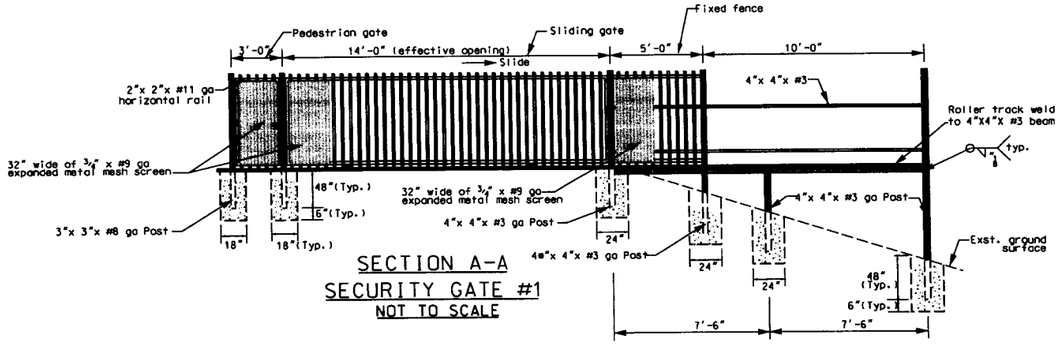

SECTION A-A
SECURITY GATE #1
NOT TO SCALE

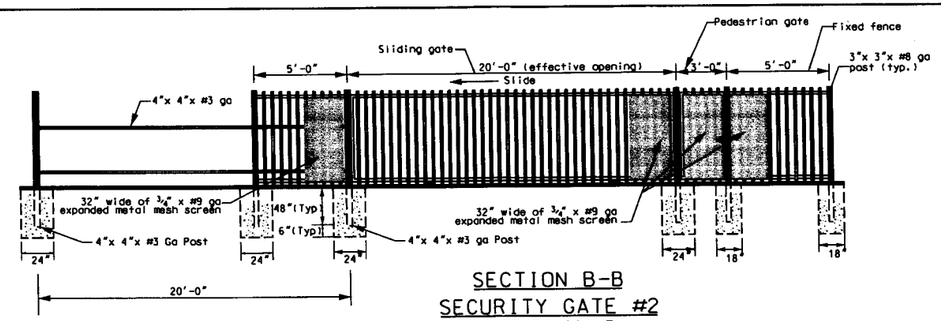

SECTION B-B
SECURITY GATE #2
NOT TO SCALE

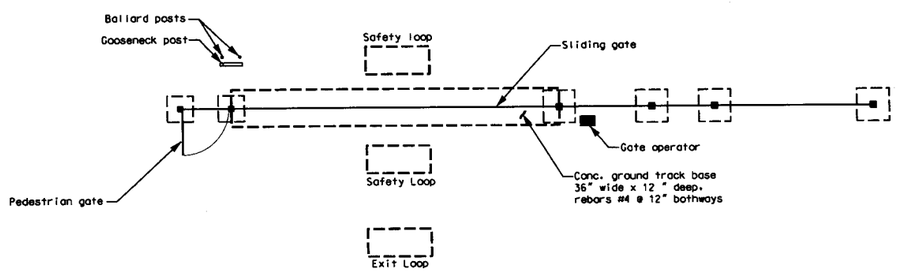

PLAN VIEW
SECURITY GATE # 1
NOT TO SCALE

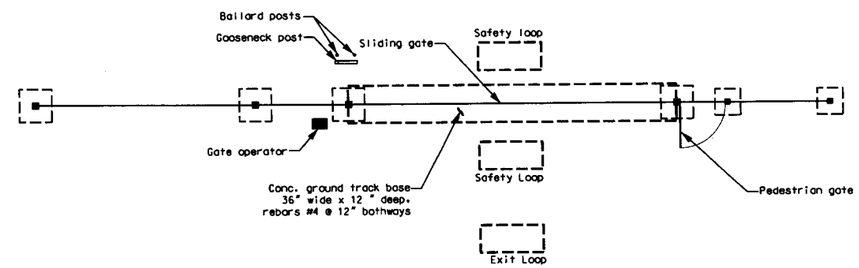

PLAN VIEW
SECURITY GATE # 2
NOT TO SCALE

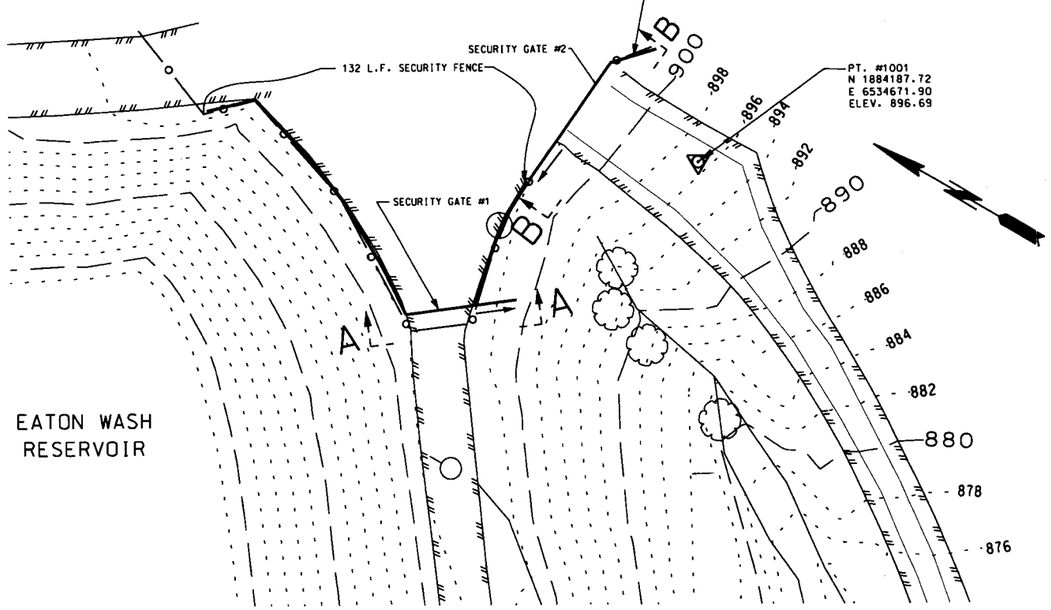

PLAN
SCALE: 1" = 20'
20 0 40 80

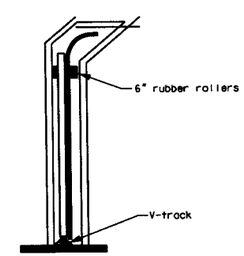

GUIDE ROLLER POST AND
LATCH POST DETAIL (TYP.)
NOT TO SCALE

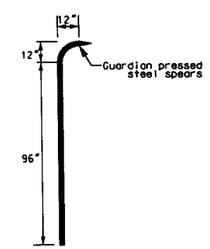

PICKET DETAIL
NOT TO SCALE

10/17/11	1	Revised Project Name and Project ID No.
DATE	MK	DESCRIPTION

REVISIONS

REGISTERED PROFESSIONAL ENGINEER
NOLI LASAO
NO. C60956
CIVIL
STATE OF CALIFORNIA

PROJECT ENGINEER 11/22/11 DATE

PLAN D

COUNTY OF LOS ANGELES DEPARTMENT OF PUBLIC WORKS

EATON WASH DAM AND RESERVOIR
DOWNSTREAM SLOPE PROTECTION

SECURITY GATES
SECTIONS AND DETAILS

FCC0001213 1 | PCA X5009677 | DWG 24A-D65.32 | SHEET 32 OF 33

DRAFTER N. LASAO
DESIGNER N. LASAO
CHECKER A. ZANDIEH
CADD PROJECT FILE NAME FCC0001213.DGN
REVIEWED 11/22/11
DATE

DATE: $DATE$ TIME: $TIME$ FILE: $FILE$

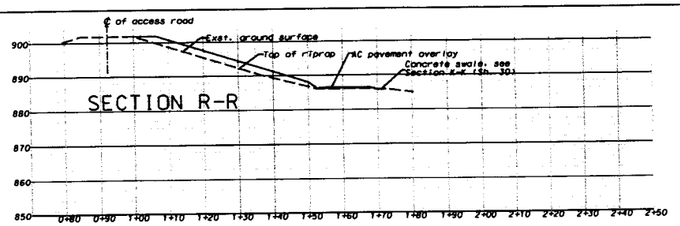

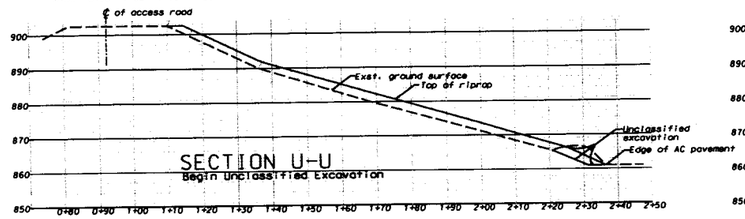

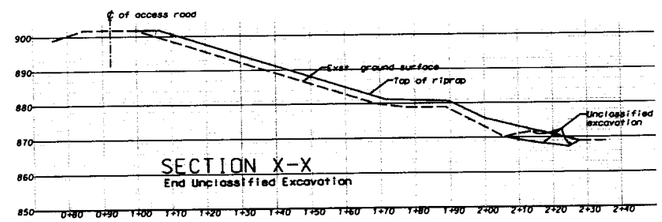

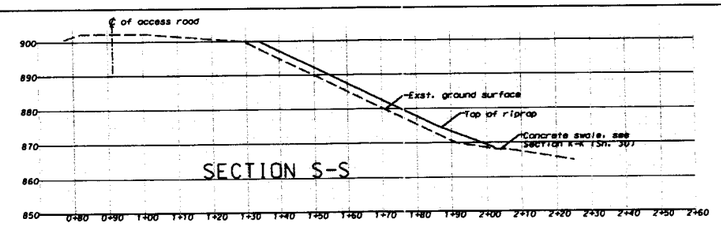

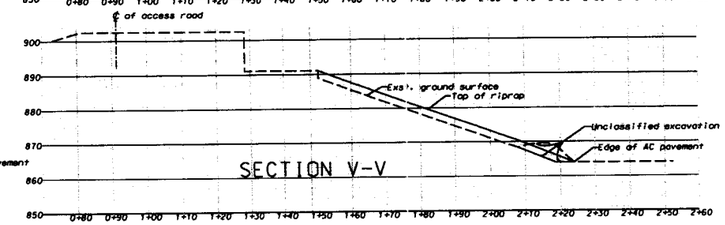

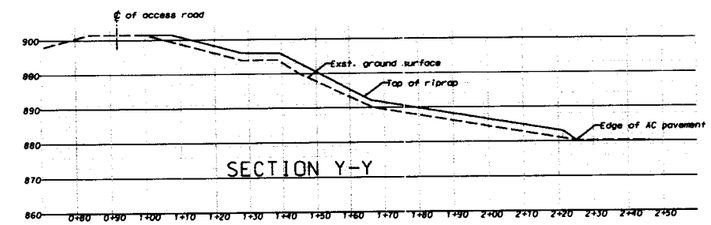

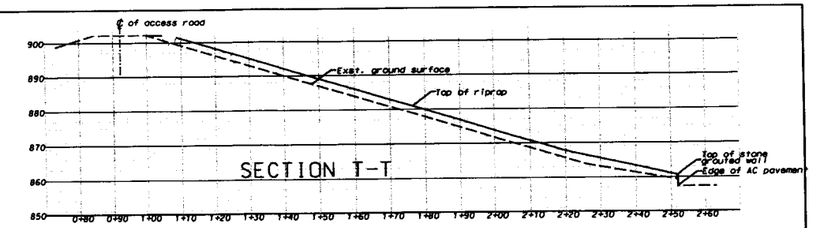

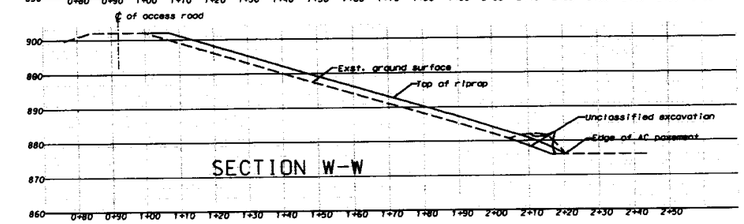

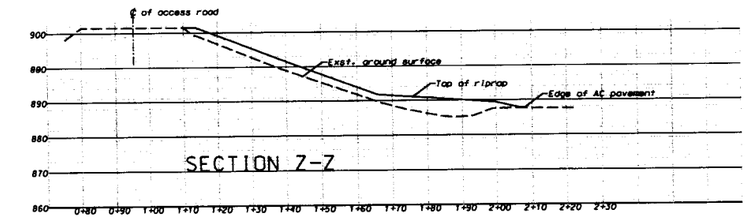

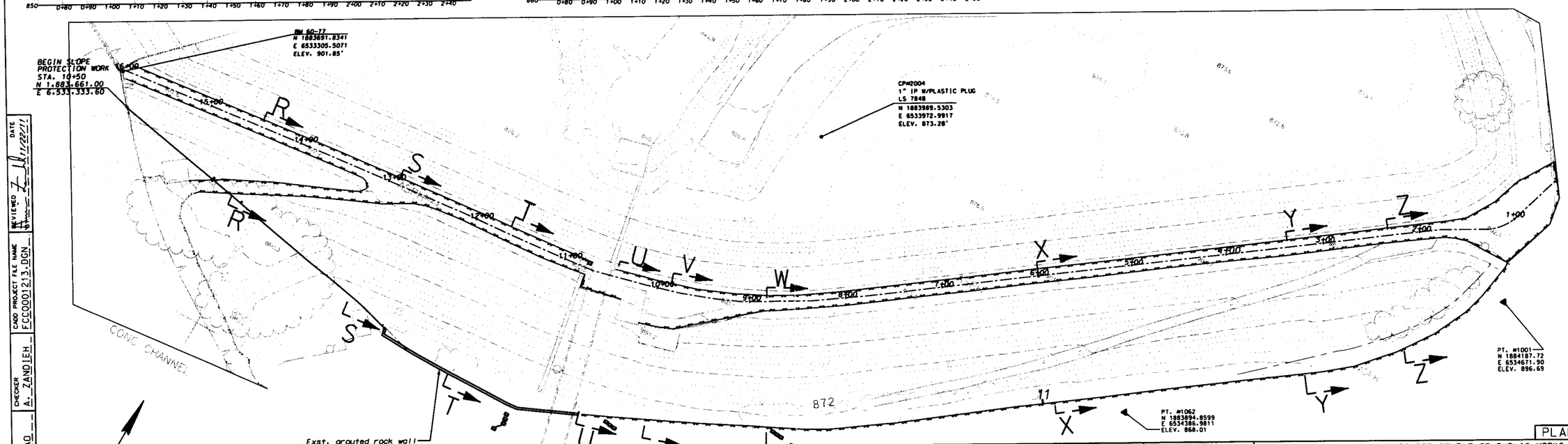

PLAN

SCALE: 1" = 50'

25 0 50 100

DRAFTER	DESIGNER	CHECKER	CADD PROJECT FILE NAME	REVIEWED	DATE
N. LASAO	N. LASAO	A. ZANDIEH	FCC0001213.DGN		11/22/11

DATE	MK	DESCRIPTION
10/17/11	1	Revised Project Name and Project ID No.

REVISIONS

REGISTERED PROFESSIONAL ENGINEER — NOLI LASAO — NO. C60956 — CIVIL — STATE OF CALIFORNIA

PROJECT ENGINEER — DATE 11/22/11

PLAN D

COUNTY OF LOS ANGELES DEPARTMENT OF PUBLIC WORKS

EATON WASH DAM AND RESERVOIR

DOWNSTREAM SLOPE PROTECTION

PLAN AND CROSS SECTIONS

FCC0001213 | PCA X5009677 | DWG 24A-065.33 | SHEET 33 OF 33

DATE: $DATE$ TIME: $TIME$ FILE: $FILE$

COUNTY OF LOS ANGELES
DEPARTMENT OF PUBLIC WORKS
EATON WASH

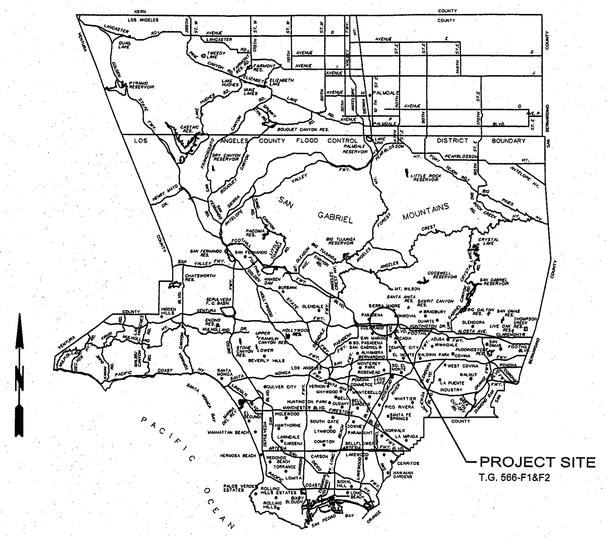

LOCATION MAP

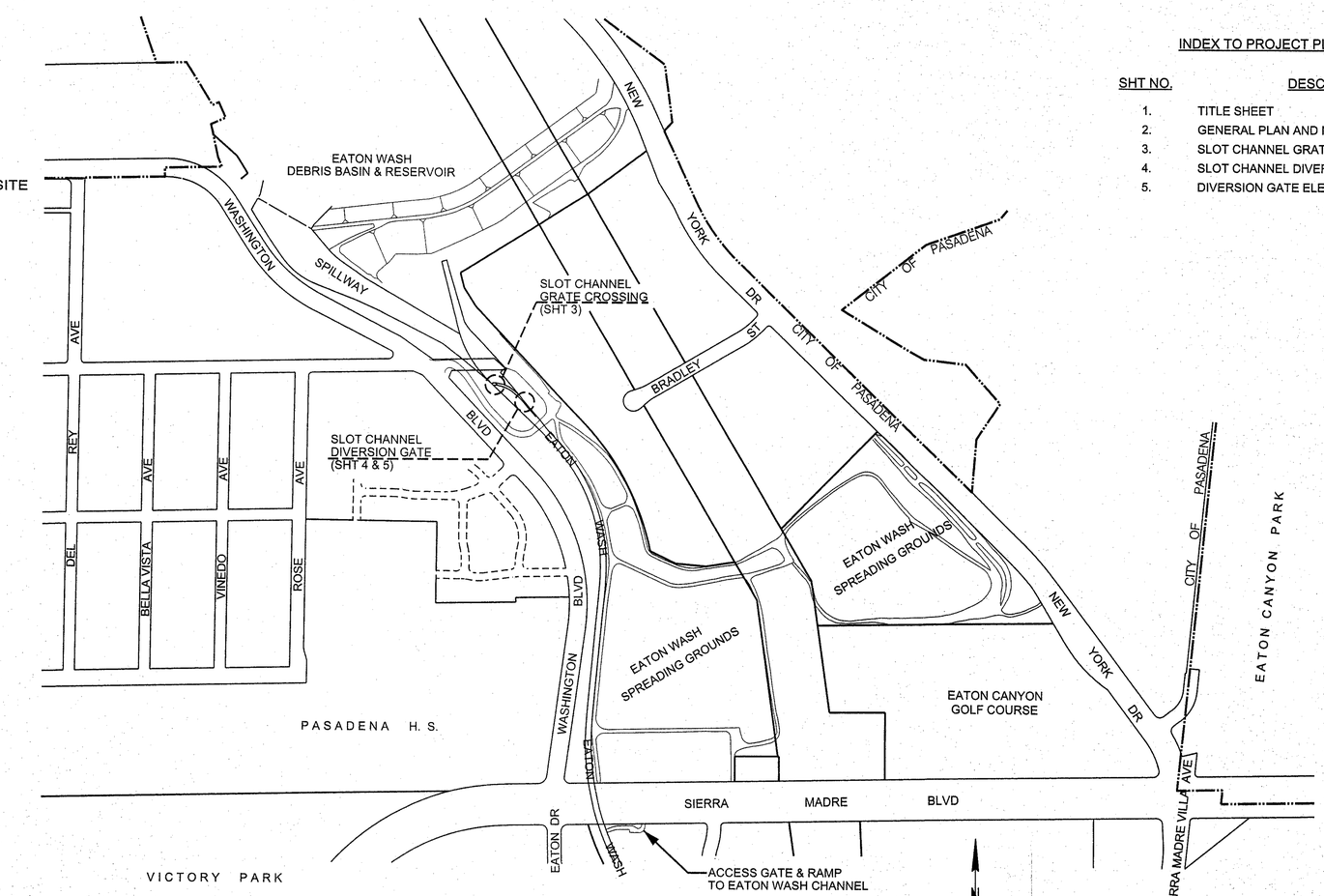

VICINITY MAP
NOT TO SCALE

INDEX TO PROJECT PLANS

SHT NO.	DESCRIPTION
1.	TITLE SHEET
2.	GENERAL PLAN AND NOTES
3.	SLOT CHANNEL GRATE CROSSING PLAN, SECTIONS, AND DETAILS
4.	SLOT CHANNEL DIVERSION GATE PLAN, SECTIONS, AND DETAILS
5.	DIVERSION GATE ELECTRICAL INSTALLATIONS

PROJECT ID FCC0001212
EATON WASH CHANNEL IMPROVEMENTS & EATON WASH SPREADING GROUNDS BASIN ENLARGEMENT
NO REFUND
Bid Package Price: $15.00

CONTRACT PIN FCC0001212

PRIME CONTRACTOR LICENSE
REQURIED: CLASS A OR C12

TWO DAYS BEFORE YOU DIG
CALL USA TOLL FREE
1-800-227-2600

APPROVED GAIL FARBER DIRECTOR OF PUBLIC WORKS
BY [signature] DEPUTY DIRECTOR 7-09-2012 DATE
RECOMMENDED
BY [signature] ASSISTANT DEPUTY DIRECTOR, DESIGN 7/9/12 DATE
SUBMITTED
BY [signature] 6/26/12 DATE

DATE	MK	DESCRIPTION

REVISIONS

REGISTERED PROFESSIONAL ENGINEER
Scott D. Gregowske
NO. C68087
EXP. 06/30/13
CIVIL
STATE OF CALIFORNIA
[signature] 06/18/12
PROJECT ENGINEER DATE

COUNTY OF LOS ANGELES DEPARTMENT OF PUBLIC WORKS
EATON WASH
CHANNEL IMPROVEMENTS
TITLE SHEET

FCC0001106	PCA EF11311128	DWG 24-D78.1	SHEET 1 OF 5

DRAFTER S. GREGOWSKE
DESIGNER S. GREGOWSKE
CHECKER KENNETH HO
CADD PROJECT FILE NAME FCC0001106-STRUCTURE.dgn

DATE. $DATE$ TIME. $TIME$ FILE. $FILEL$

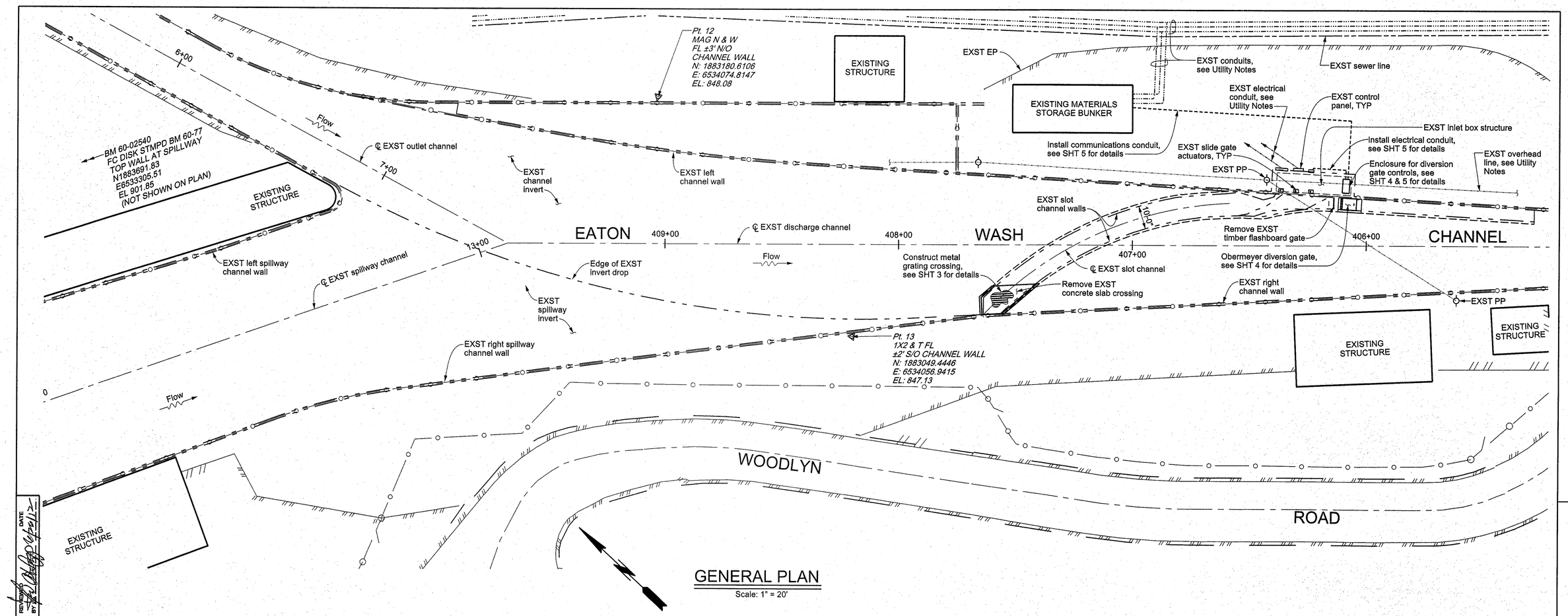

GENERAL PLAN

Scale: 1" = 20'

GENERAL NOTES

DESIGN:	American Concrete Institute: Building Code Requirements For Structural Concrete (ACI 318-02) and Commentaries (ACI 318R-02)	
	Los Angeles County Flood Control District Structural Design Manual, Dated April 1982	
	California Department of Transportation Bridge Design Specifications - 2004	
DESIGN STRESSES:	Concrete:	f'c = 4,000 psi
	Reinforcing Steel (A706):	fy = 60,000 psi
	Structural Steel (A36):	fy = 36,000 psi
	Welding Structural Steel (AWS D1.1):	Electrodes - Fu = 70 ksi MIN
DESIGN LOAD:	Metal Grating Crossing:	HS20-44 Truck
	Wall Earth Loads:	
	Active E.F.P.	62.5 psf
	Surcharge	72.0 psf
	Allowable Bearing Pressure	1,500 psf

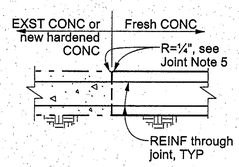

CONSTRUCTION JOINT

Not to Scale

STRUCTURAL NOTES

1. Concrete dimensions shall be measured horizontally or vertically on the profile, and parallel to, or at right angles to the centerlines shown on the Plan unless otherwise indicated.
2. All bar bends and hooks shall conform to the American Concrete Institute's "Building Code Requirements for Reinforced Concrete," latest edition.
3. Concrete cover for reinforcing bars shall be 3" unless shown otherwise.
4. Exposed edges on concrete members shall be rounded or beveled.
5. No splices in transverse bar reinforcement shall be permitted other than shown on the drawing without approval of the Engineer.

JOINT NOTES

1. If fresh concrete is placed adjacent to existing concrete, the top corner of the existing concrete does not need to be rounded to the ¼" radius, as shown in "Construction Joint"

REFERENCES

Survey:	Eaton Wash S.G. Improvements	EatonWashIMPV.dgn
	Eaton Wash Dam and Reservoir	24A-T63 (July 2007)
	Eaton Wash Spreading Grounds	24A-T41 (July 2007)

As-built Drawings:	Description	Drawing Numbers
	Spillway Plans:	PF529331 - PF529332 PF529339 - PF529340
	Spillway & Channel Plans:	PF31349 - PF31379 PF31404

BENCHMARK

BM 060-02540
El. = 901.85 NGVD 29, PASADENA 1990 ADJ.
FC DISK STAMPED B.M. 60-77
TOP WALL OF SPILLWAY
N 1883691.8341
E 6533305.5071
FC 3454-52

UTILITY NOTES

1. Existing Flood Control utilities are present within the vicinity of the existing inlet box structure.
2. The Agency will mark the existing utilities located within the limits of the Work. The Contractor shall notify the Engineer a minimum of four (4) weeks prior to the beginning of any work for the diversion gate, so that the utilities can be marked.
3. The Contractor shall protect all existing utilities in place.

THE CONTRACTOR SHALL VERIFY ALL CONTROLLING FIELD DIMENSIONS BEFORE ORDERING OR FABRICATING ANY MATERIAL.

DATE	MK	DESCRIPTION

REVISIONS

REGISTERED PROFESSIONAL ENGINEER — Scott D. Gregowske — NO. C68087 — EXP. 06/30/13 — CIVIL — STATE OF CALIFORNIA

PROJECT ENGINEER — DATE 06/18/12

COUNTY OF LOS ANGELES DEPARTMENT OF PUBLIC WORKS

EATON WASH
CHANNEL IMPROVEMENTS

GENERAL PLAN AND NOTES

FCC0001106	PCA EF11311128	DWG 24-D78.2	SHEET 2 OF 5

T8-DB 11/08

DRAFTER S. GREGOWSKE | DESIGNER S. GREGOWSKE | CHECKER KENNETH HO | CADD PROJECT FILE NAME FCC0001106-STRUCTURE.dgn | REVISED BY | DATE

DATE: $DATE$ TIME: $TIME$ FILE: $FILEL$

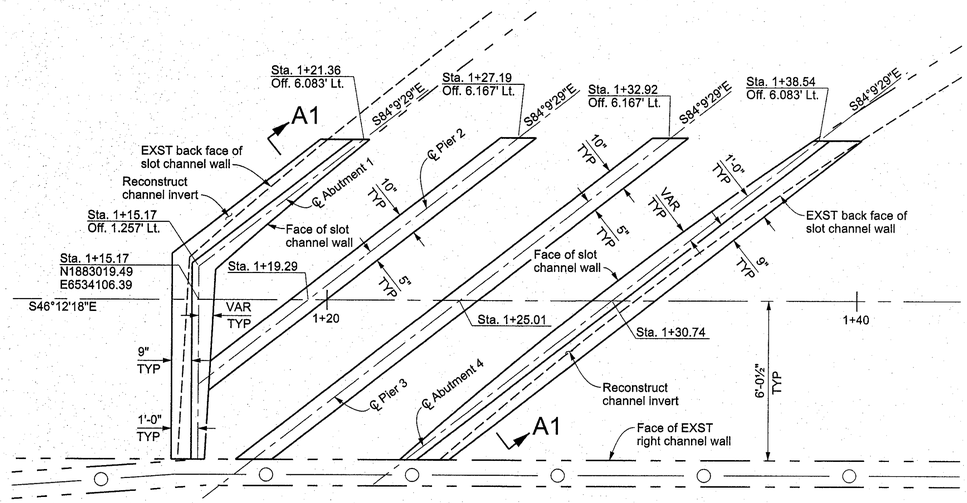

SLOT CHANNEL GRATE CROSSING FOUNDATION PLAN

Scale: ¾" = 1'-0"

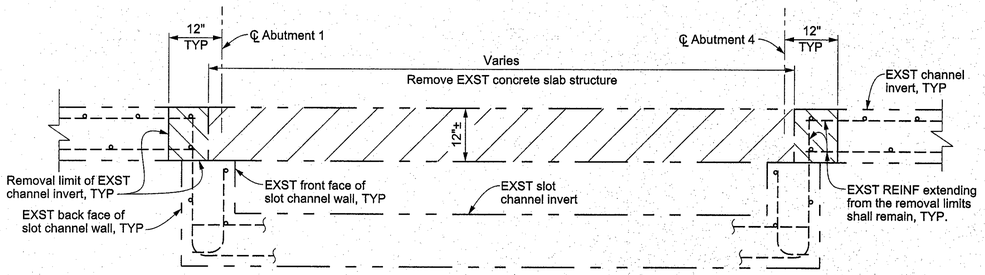

REMOVAL

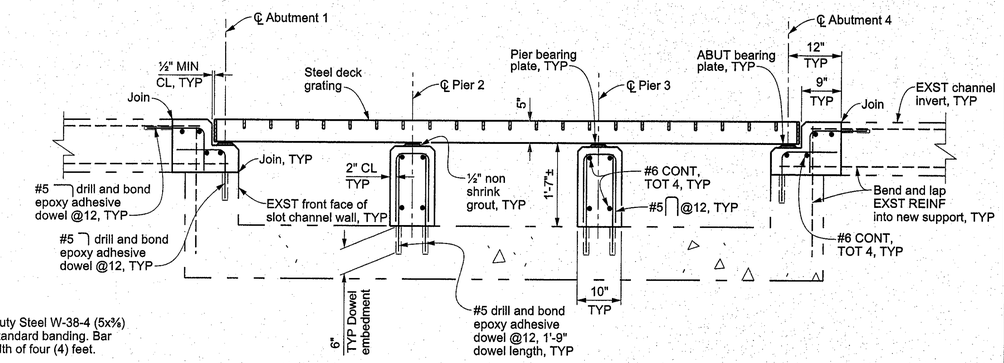

NEW CONSTRUCTION

SECTION A1-A1

Scale: ¾" = 1'-0"

NOTES:

1. Bar grating shall be galvanized Heavy Duty Steel W-38-4 (5x¾) with serrated top. All edges shall have standard banding. Bar grating panels shall have a minimum width of four (4) feet.
2. Anchor holes shall be placed along the ℄ of the supports, placed equally between adjacent grating bars, and in the center of the support bearing ℙ. Final placement of holes the shall be determined by the fabricator with the approval of the Engineer.
3. Anchor shall be ½" DIA drill and bond epoxy adhesive threaded anchor rod. Anchor embedment depth shall be 4" minimum. Each anchor shall include hex nut and washer. All anchors shall be 304 stainless steel.
4. Epoxy adhesive for bonding dowels and threaded anchor rods shall be SET-XP by Simpson Strong-Tie Company Inc. or Agency approved equal.
5. All existing reinforcement located within the removal limits shall remain and be incorporated into the Work.

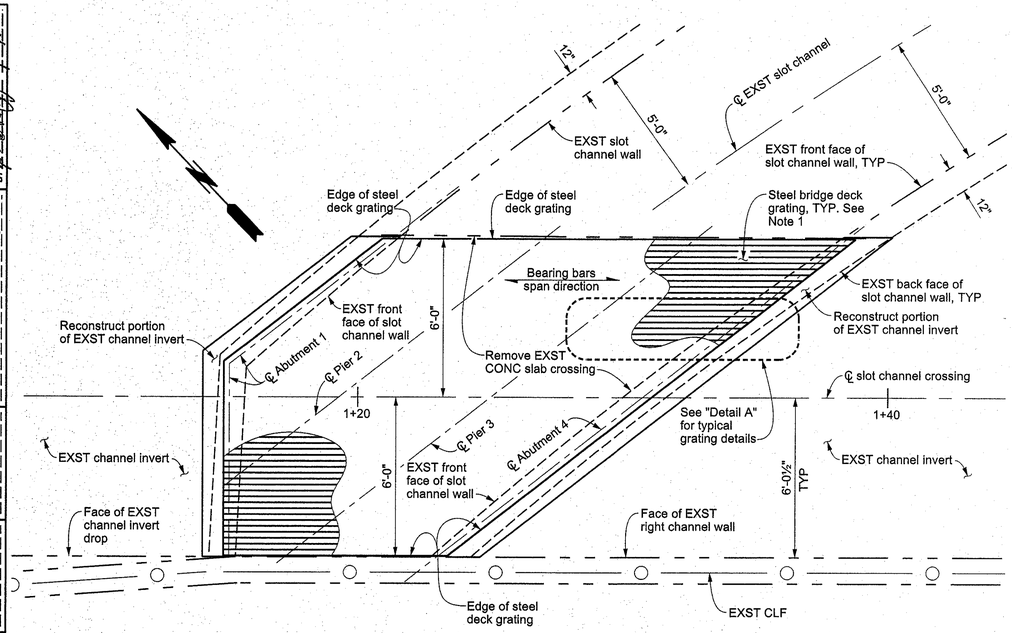

SLOT CHANNEL GRATE CROSSING PLAN

Scale: ⅜" = 1'-0"

Note: Entire coverage of bar grating not shown for clarity.

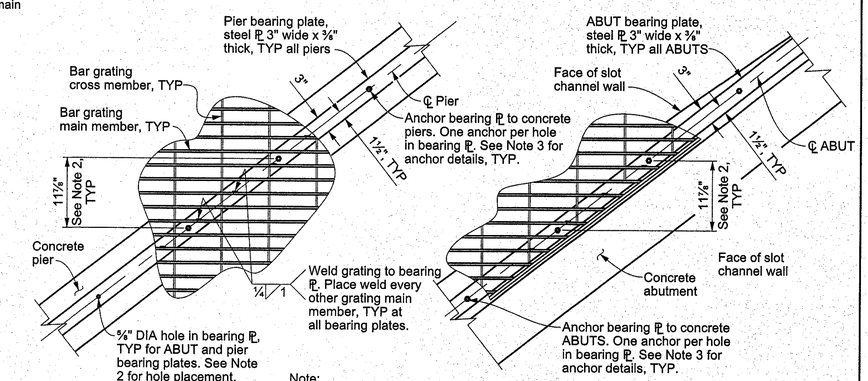

Note:
Typical grating detail shown for Pier 3 & ABUT 4.
Details for ABUT 1 & Pier 2 are similiar.

DETAIL A

Not to Scale

THE CONTRACTOR SHALL VERIFY ALL CONTROLLING FIELD DIMENSIONS BEFORE ORDERING OR FABRICATING ANY MATERIAL.

DATE	MK	DESCRIPTION

REVISIONS

REGISTERED PROFESSIONAL ENGINEER Scott D. Gregowske NO. C68087 EXP. 06/30/13 CIVIL STATE OF CALIFORNIA

PROJECT ENGINEER 06/18/12 DATE

COUNTY OF LOS ANGELES DEPARTMENT OF PUBLIC WORKS

EATON WASH
CHANNEL IMPROVEMENTS

SLOT CHANNEL GRATE CROSSING PLAN, SECTIONS, AND DETAILS

FCC0001106 | PCA EF11311128 | DWG 24-D78.3 | SHEET 3 OF 5

TS-DB 11/08

DRAFTER S. GREGOWSKE | DESIGNER S. GREGOWSKE | CHECKER KENNETH HO | CADD PROJECT FILE NAME FCC0001106-STRUCTURE.dgn | REVISED BY | DATE

DATE: $DATE$ TIME: $TIME$ FILE: $FILEL$

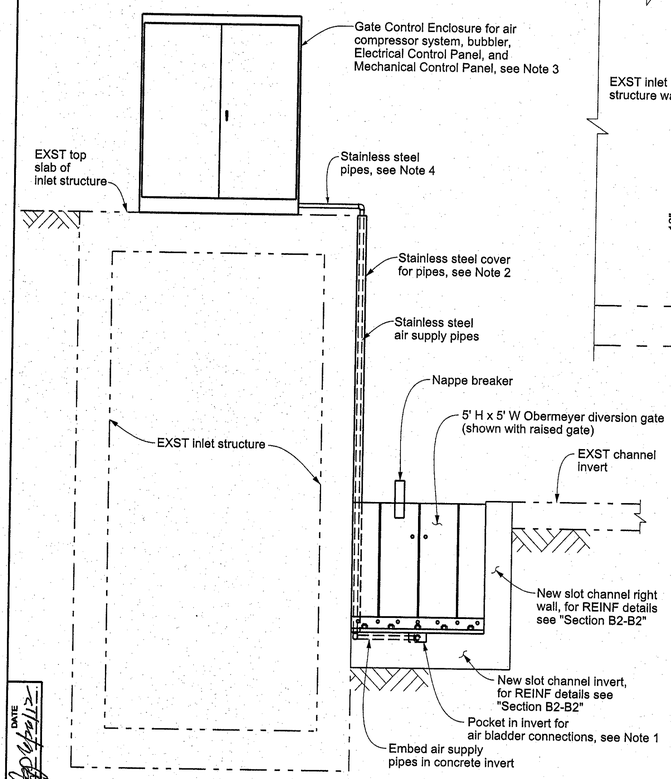

SECTION B1-B1

Scale: ⅜" = 1'-0"

Note: For clarity, reinforcement now shown.

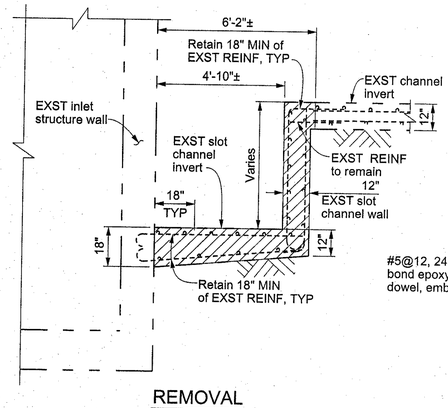

REMOVAL

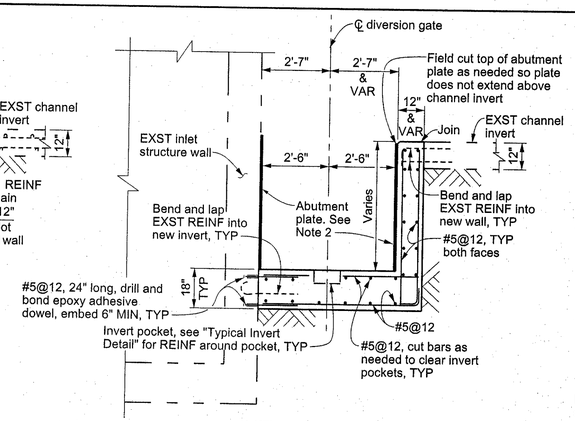

NEW CONSTRUCTION

SECTION B2-B2

Scale: ¾" = 1'-0"

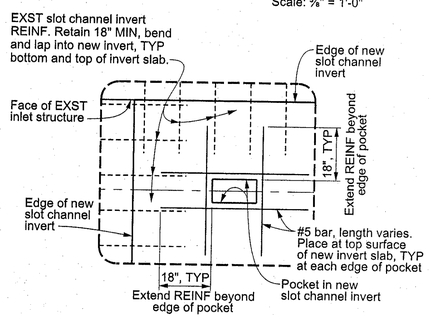

TYPICAL INVERT DETAIL

Scale: ½" = 1'-0"

Notes:
1. #5@12 REINF for new slot channel invert slab not shown for clarity.
2. Pocket REINF details are typical for both pockets in the new invert.
3. EXST REINF details shown are typical for both ends of the new slot channel invert slab.

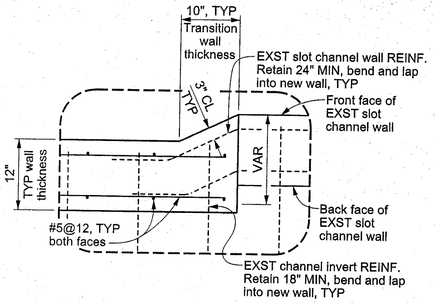

TYPICAL WALL DETAIL

Scale: 1" = 1'-0"

Note: EXST REINF details shown are typical for both ends of the new slot channel wall

NOTES:
1. Additional details for the new invert, including size and location of invert pockets, gate anchorage, and controlling gate dimensions shall be provided by the gate manufacturer.
2. Details for the abutment plates and pipe cover, including dimensions and anchorage, shall be provided by the gate manufacturer. All details shall be reviewed and approved by the Engineer.
3. The Gate Control Enclosure shall be a floor mounted, NEMA 4, metal cabinet. Size and required details for the enclosure shall be provided by the gate manufacturer.
4. The location of the enclosure, and the final layout of the air supply and sensor pipes, shall be determined in the field with approval of the Engineer.
5. All details that are provided by the gate manufacturer, or are not specifically shown on the Plans, shall be reviewed and approved by the Engineer.

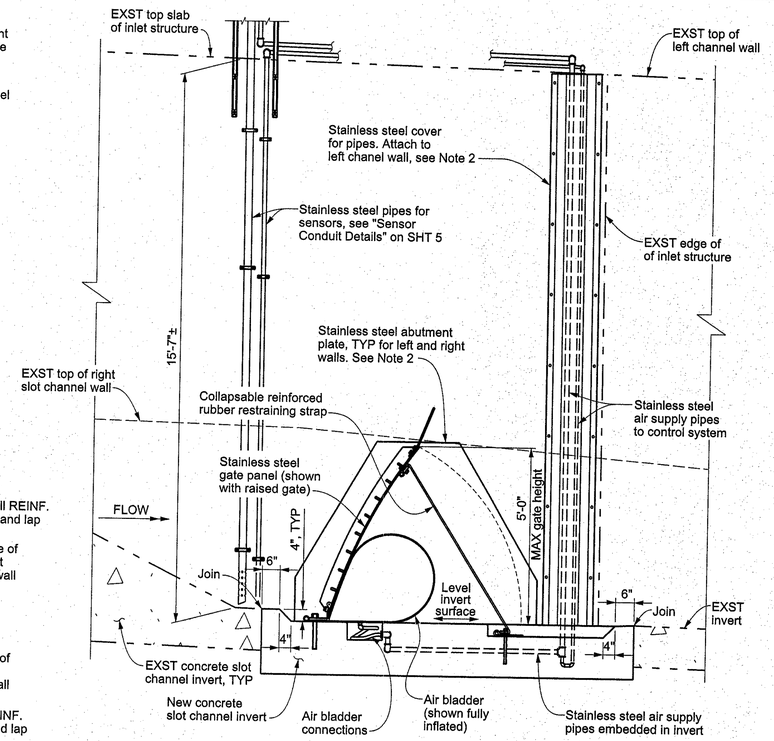

SECTION B3-B3

Scale: ½" = 1'-0"

Note: For clarity, reinforcement now shown.

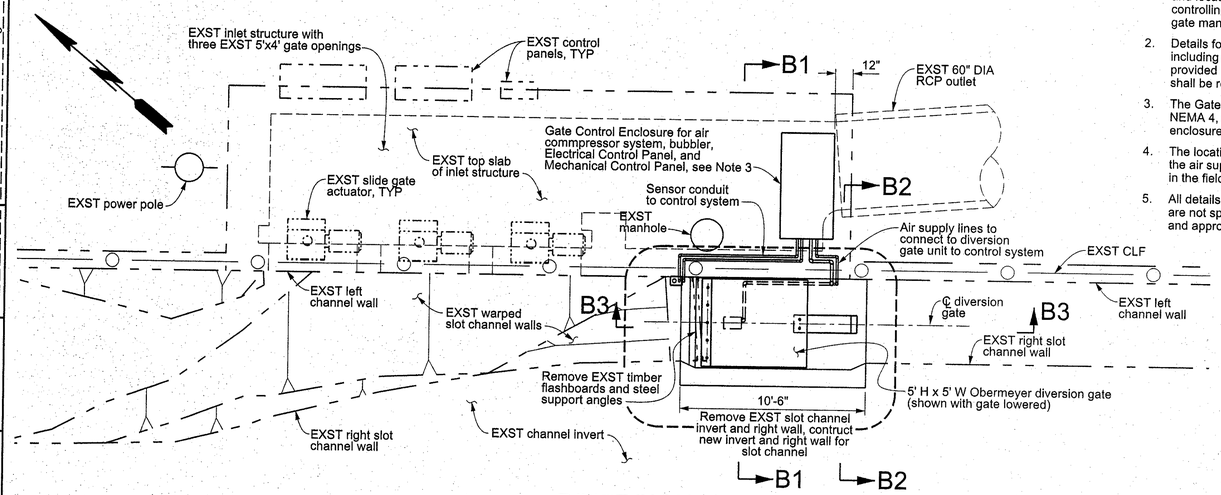

DIVERSION GATE PLAN

Scale: ¼" = 1'-0"

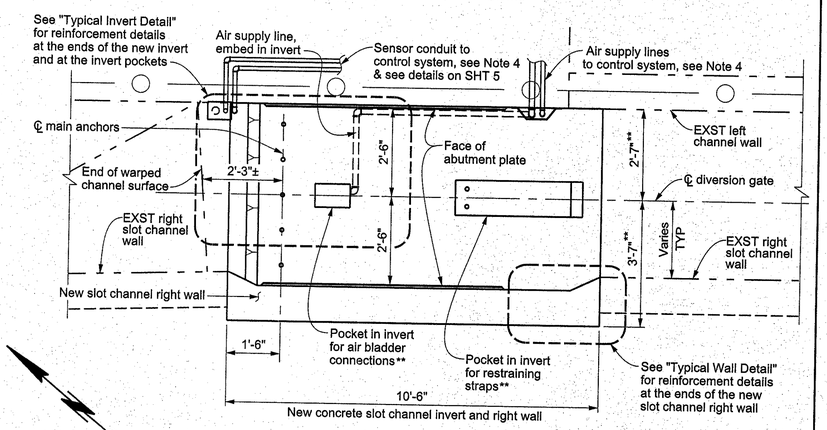

DIVERSION GATE INVERT DETAIL PLAN

Scale: ½" = 1'-0"

THE CONTRACTOR SHALL VERIFY ALL CONTROLLING FIELD DIMENSIONS BEFORE ORDERING OR FABRICATING ANY MATERIAL.

DATE	MK	DESCRIPTION

REVISIONS

REGISTERED PROFESSIONAL ENGINEER — Scott D. Gregowske — NO. C86087 — EXP. 06/30/13 — CIVIL — STATE OF CALIFORNIA

PROJECT ENGINEER — DATE 06/18/12

COUNTY OF LOS ANGELES DEPARTMENT OF PUBLIC WORKS

EATON WASH
CHANNEL IMPROVEMENTS

SLOT CHANNEL DIVERSION GATE PLAN, SECTIONS, AND DETAILS

FCC0001106 | PCA EF11311128 | DWG 24-D78.4 | SHEET 4 OF 5

DRAFTER S. GREGOWSKE | DESIGNER S. GREGOWSKE | CHECKER KENNETH HO | CADD PROJECT FILE NAME FCC0001106-STRUCTURE.dgn | REVIEWED BY | DATE

DATE: $DATE$ TIME: $TIME$ FILE: $FILEL$

TS-DS 11/08

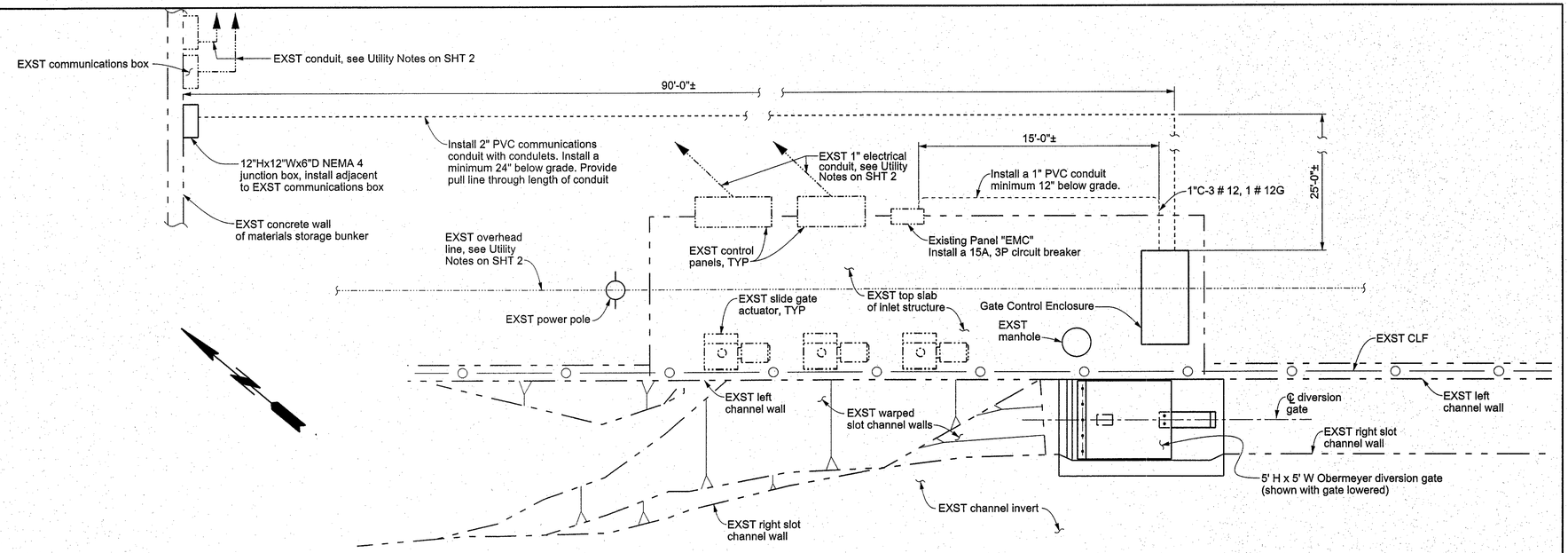

DIVERSION GATE PLAN (ELECTRICAL)

Scale: ¼" = 1'-0"

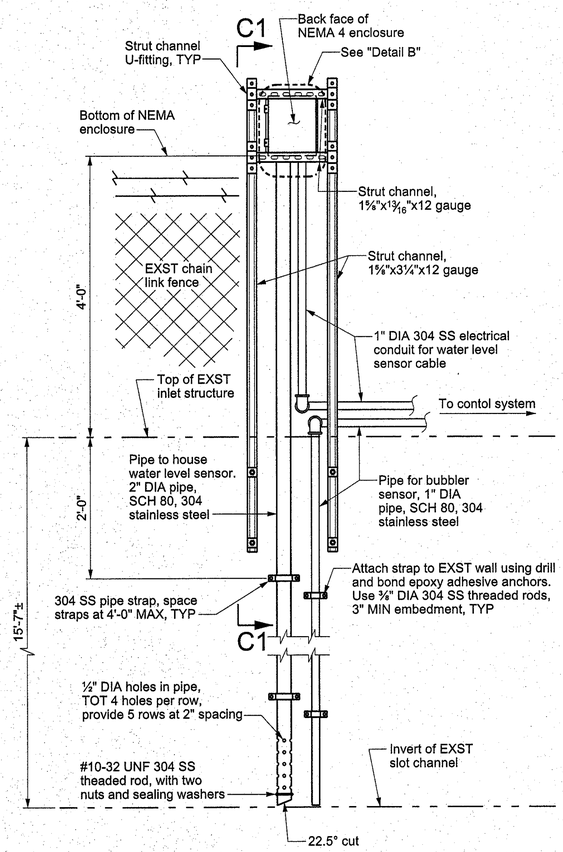

SENSOR CONDUIT DETAILS

Scale: 1" = 1'-0"

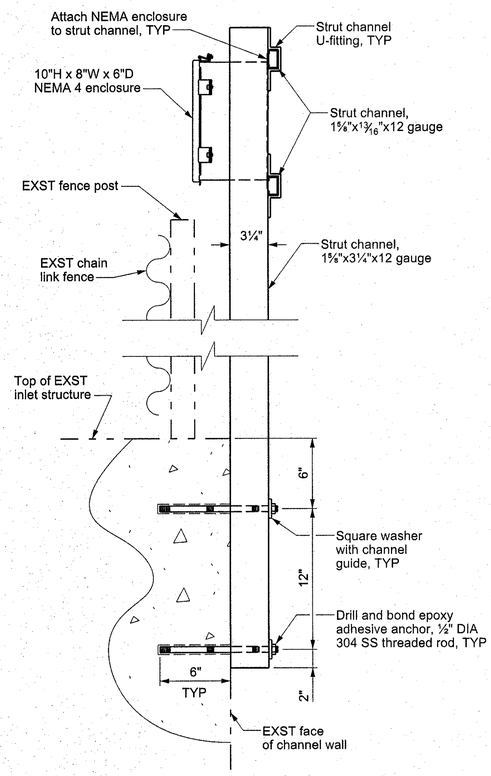

ELEVATION C1-C1

Not to Scale

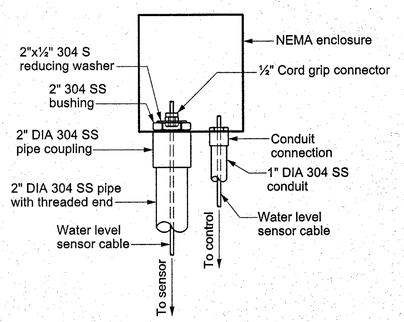

DETAIL B

Not to Scale

THE CONTRACTOR SHALL VERIFY ALL CONTROLLING FIELD DIMENSIONS BEFORE ORDERING OR FABRICATING ANY MATERIAL.

DATE	MK	DESCRIPTION

REVISIONS

REGISTERED PROFESSIONAL ENGINEER Scott D. Gregowske NO. C68087 EXP. 06/30/13 CIVIL STATE OF CALIFORNIA

PROJECT ENGINEER 06/18/12 DATE

COUNTY OF LOS ANGELES DEPARTMENT OF PUBLIC WORKS

EATON WASH
CHANNEL IMPROVEMENTS

DIVERSION GATE ELECTRICAL INSTALLATIONS

FCC0001106	PCA EF11311128	DWG 24-D78.5	SHEET 5 OF 5

T9-D8 11/08

DRAFTER H. SHALVIRI | DESIGNER H. SHALVIRI | CHECKER M. TJAN | CADD PROJECT FILE NAME FCC0001106-STRUCTURE.dgn | REVIEWED BY | DATE 6/18/12

DATE: $DATE$ TIME: $TIME$ FILE: $FILEL$

COUNTY OF LOS ANGELES
DEPARTMENT OF PUBLIC WORKS
EATON WASH

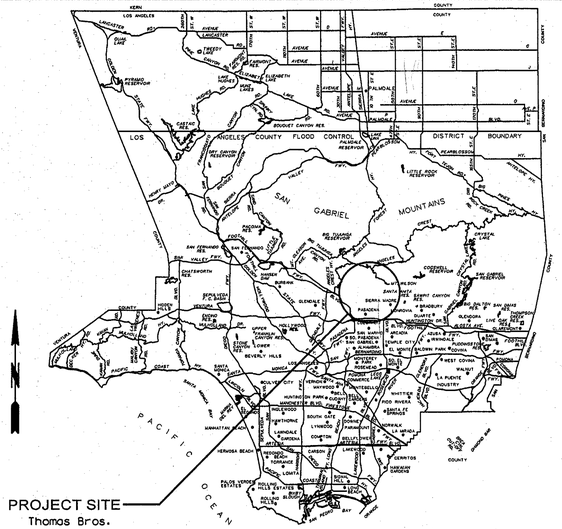

LOCATION MAP

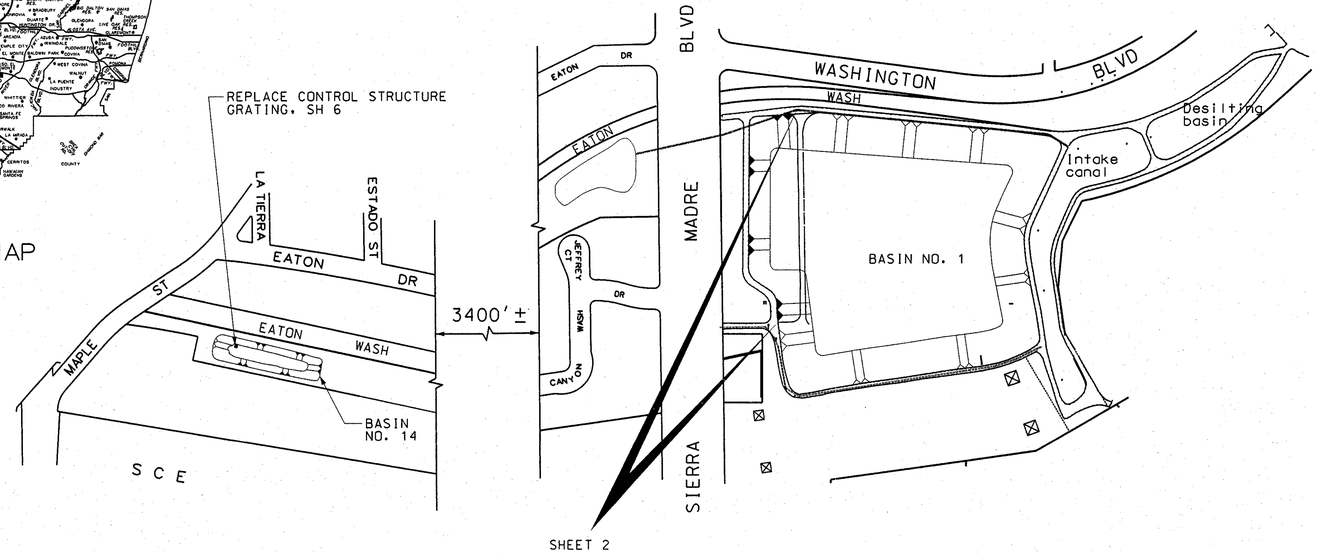

CITY OF PASADENA

GENERAL PLAN
NOT TO SCALE

INDEX TO PROJECT PLANS

SH. NO.	DESCRIPTION
1	TITLE SHEET
2	GRADING PLAN
3	PIPE EXTENSION, PLAN AND PROFILE
4	OUTLET STRUCTURE DETAILS
5	RETAINING WALL PLAN AND PROFILE
6	CONTROL STRUCTURE GRATING DETAILS
7	DECORATIVE STEEL PICKET FENCE
8	LANDSCAPING GENERAL NOTES
9	LEGENDS
10	REMOVAL/IRRIGATION PLAN
11	PLANTING PLAN
12	DETAILS
13	LOG OF BORINGS

INDEX TO STANDARD PLANS

STD. PLAN	LACDPW TITLE
3090-1	CRITERIA FOR THE DESIGN OF SHORING FOR EXCAVATIONS
3091-1	SAMPLE SHEET FOR USE AS A GUIDE IN PREPARING CALCULATIONS FOR SHORING EXCAVATIONS
3093-1	UNIFIED SOIL CLASSIFICATION SYSTEM
6002-1	PORTABLE SECURITY FENCE FOR OPEN TRENCHES
6008-1	MINIMUM PUBLIC SAFETY REQUIREMENT FOR OPEN EXCAVATIONS

STD. PLAN	SPPWC TITLE
221-2	PIPE ANCHORS AND BACKFILL STABILIZERS
380-4	CONCRETE COLLAR FOR RCP 12" (30mm) THROUGH 72" (1800mm)
383-2	VELOCITY CONTROL RING PRECAST RCP SECTION
606-3	METAL HAND RAILINGS
615-4	REINFORCED CONCRETE RETAINING WALL TYPE 6

STD. PLAN	CITY OF PASADENA TITLE
S-403	DRIVEWAY - DUSTPAN TYPE

UTILITIES

SEWER.....CITY OF PASADENA
WATER.....CITY OF PASADENA
METROPOLITAN WATER DISTRICT
POWER.....SOUTHERN CALIFORNIA EDISON
CITY OF PASADENA
TELEPHONE.....LEVEL (3) COMMUNICATIONS

REFERENCES

SURVEY.....FC 3454 PGS. 53 to 55

GENERAL NOTES

1. ELEVATIONS SHOWN ARE IN FEET ABOVE THE USGS BASED ON PASADENA QUAD 1990 ADJUSTMENT, NGVD 29 DATUM.
2. EXISTING TREES SHALL BE REMOVED ONLY IF SO DESIGNATED. THOSE TREES NOT DESIGNATED AS INTERFERING WITH CONSTRUCTION SHALL BE PROTECTED IN PLACE.
3. ALL EXISTING UTILITIES SHOWN ON THE PLANS ARE THE PROPERTY OF THE AGENCIES LISTED ON SHEET 1.
4. EXISTING UTILITIES SHALL BE MAINTAINED IN PLACE BY THE CONTRACTOR, UNLESS OTHERWISE NOTED, AND ALL UTILITIES SHALL BE TEMPORARILY SUPPORTED TO THE SATISFACTION OF THE OWNER.
5. STATIONS SHOWN ON THE PLANS ARE ALONG CENTER LINE OF CONSTRUCTION. OR ON A LINE NORMAL TO CENTER LINE OF CONSTRUCTION.
6. STRUCTURAL NOTES ARE FOUND ON SH 4.
7. ALL FIELD BOOK REFERENCES ARE TO LOS ANGELES COUNTY DEPARTMENT OF PUBLIC WORKS FIELD BOOKS, UNLESS OTHERWISE NOTED.
8. THE WORK SHOWN ON THESE PLANS REQUIRES THE PRIME CONTRACTOR TO HAVE A VALID CLASS A OR C12 LICENSE ISSUED BY THE STATE OF CALIFORNIA.

ABBREVIATIONS

ABBREVIATION	WORD OR WORDS	ABBREVIATION	WORD OR WORDS	ABBREVIATION	WORD OR WORDS
AC	ASPHALT CONCRETE	FL	FLOW LINE	S	SLOPE
BM	BENCH MARK	GC	GRADE CHANGE	SD	STORM DRAIN
℄	CENTER LINE	INT	INTERSECTION	SF	SQUARE FOOT
CLF	CHAIN LINK FENCE	HORIZ	HORIZONTAL	SPEC	SPECIFICATIONS
CONST	CONSTRUCT, CONSTRUCTION	INV	INVERT	ST	STREET
CY	CUBIC YARD	L	LENGTH	STA	STATION
DIA	DIAMETER	LACDPW	LOS ANGELES COUNTY DEPARTMENT OF PUBLIC WORKS	STD	STANDARD
DWG	DRAWING			SWR	SEWER
EC	END OF CURVE	MH	MANHOLE	TYP	TYPICAL
EL	ELEVATION	PT	POINT	VERT	VERTICAL
EXST	EXISTING	R/W	RIGHT OF WAY	W	WIDTH
		RC	REINFORCED CONCRETE	H	HEIGHT

CONTRACT PIN FCC0001212

DRAFTER	S. EK
DESIGNER	O. YCO
CHECKER	M. TERRELL
CADD PROJECT FILE NAME	FCC0001211.DGN

TWO DAYS BEFORE YOU DIG
CALL USA TOLL FREE
1-800-227-2600

APPROVED: GAIL FARBER DIRECTOR OF PUBLIC WORKS
BY Patrick V. Mitchell 7-09-2012
DEPUTY DIRECTOR DATE

RECOMMENDED
BY 7-09-2012
ASSISTANT DEPUTY DIRECTOR DATE

SUBMITTED
BY 6/26/12
DATE

DATE	MK	DESCRIPTION

REVISIONS

REGISTERED PROFESSIONAL ENGINEER
OURIE YCO
NO. C63691
EXP. 09-30-12
CIVIL
STATE OF CALIFORNIA

6/14/12
PROJECT ENGINEER DATE

COUNTY OF LOS ANGELES DEPARTMENT OF PUBLIC WORKS

EATON WASH
SPREADING GROUNDS BASIN ENLARGEMENT

TITLE SHEET

PIN FCC0001211 | JOB EF02511126 | DWG 24-D79.1 | SHEET 1 OF 13

TS-CP 08/04

DATE: $DATE$ TIME: $TIME$ FILE: $FILEL$

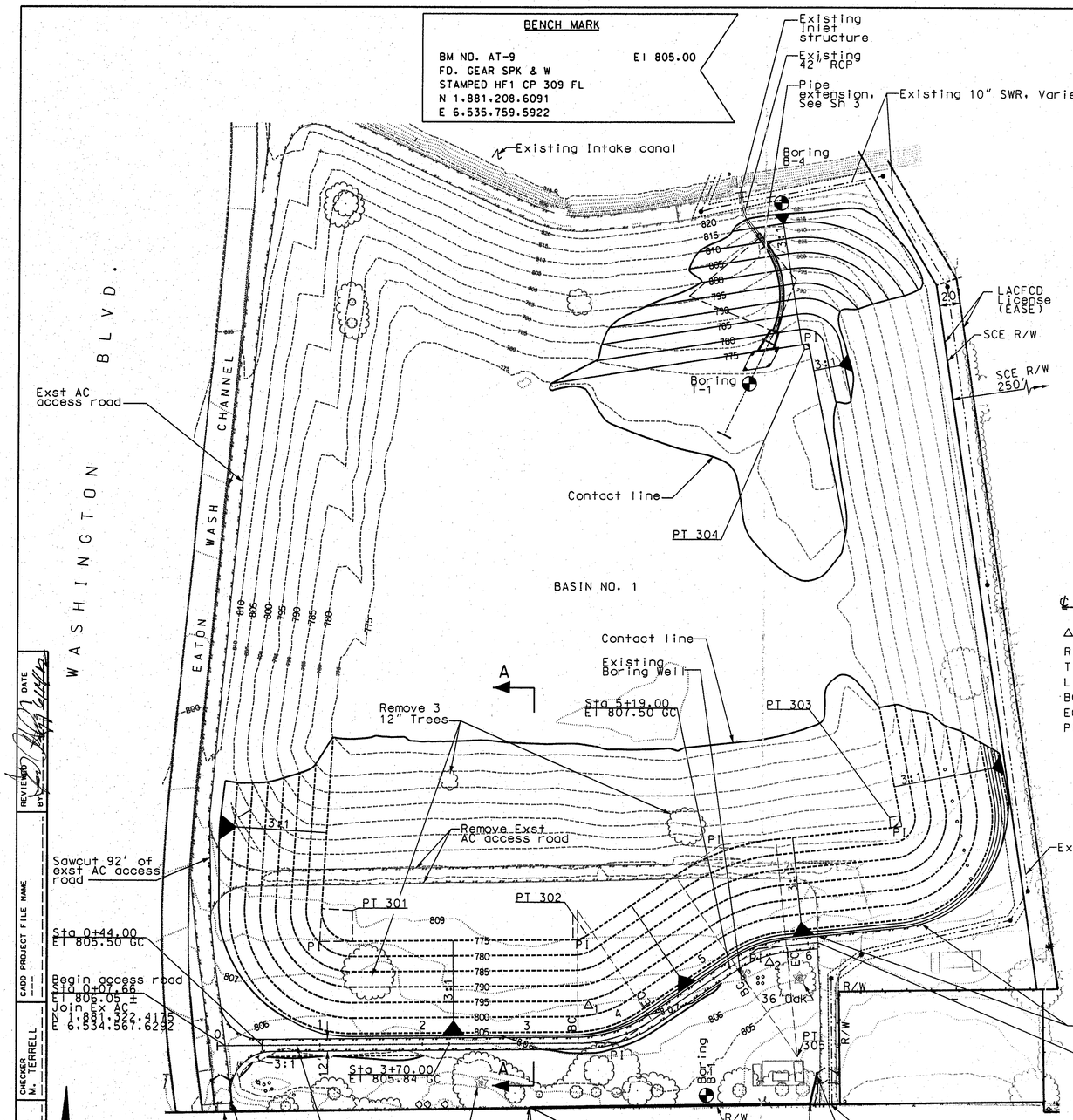

PLAN
SCALE: 1" = 60'

NOTE:
Irrigation lines not shown.

℄ Construction Curve Data
Δ_1 = 33°34'47"
R = 130'
T = 39.22'
L = 76.19'
BC = Sta. 3+51.26
EC = Sta. 4+27.45
PI = N 1.881.326.3746
E 6.534.950.3662

℄ Construction Curve Data
Δ_2 = 28°15'44"
R = 112'
T = 28.20'
L = 55.25'
BC = Sta. 5+24.29
EC = Sta. 5+79.54
PI = N 1.881.418.6379
E 6.535.086.2699

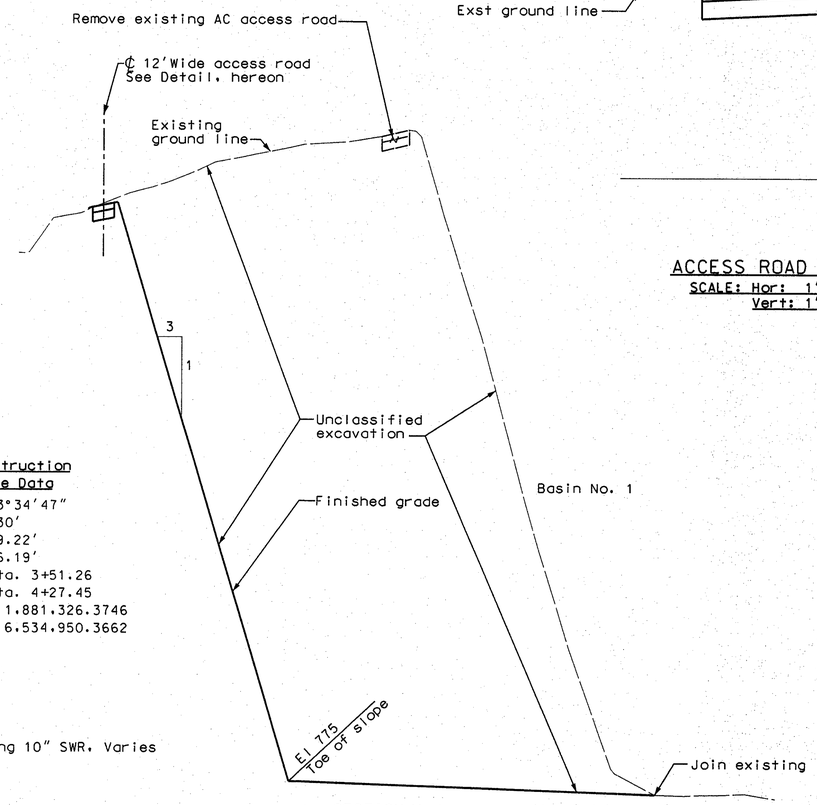

SECTION A-A
SCALE: Hor: 1" = 40'
Vert: 1" = 4'

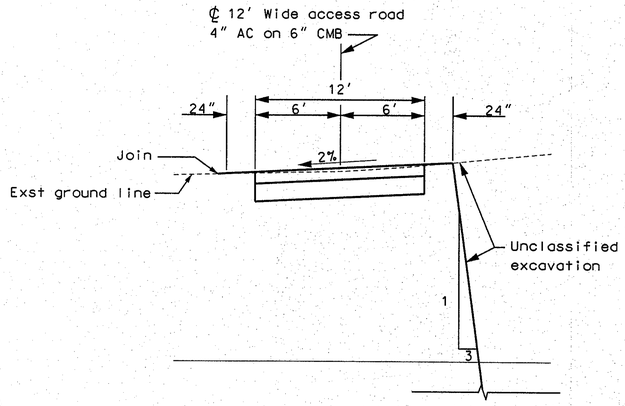

ACCESS ROAD DETAIL
SCALE: Hor: 1" = 5'
Vert: 1" = 2'

Grading Control Data							
Point No.	Ordinate		Δ Delta	R	T	PI	
	Northing	Easting				Northing	Easting
301	1.881.454.7027	6.534.691.2554	94°05'38"	30.0'	32.22'	1.881.424.3711	6.534.659.3433
302	1.881.451.9187	6.534.905.6245	33°34'47"	25.0'	7.54'	1.881.426.9980	6.534.913.4257
303	1.881.546.3956	6.535.213.2927	94°55'00"	10.0'	10.90'	1.881.537.5708	6.535.225.1615
304	1.882.002.8768	6.535.128.0345	87°40'24"	5.0'	4.80'	1.882.008.5615	6.535.132.0011
305	1.881.313.0428	6.535.124.7889	28°15'44"	213.0'	53.63'	1.881.519.3893	6.535.049.5177

DATE	MK	DESCRIPTION

REVISIONS

REGISTERED PROFESSIONAL ENGINEER
OURIE YCO
No. C63691
EXP. 09-30-12
CIVIL
STATE OF CALIFORNIA

PROJECT ENGINEER DATE

COUNTY OF LOS ANGELES DEPARTMENT OF PUBLIC WORKS

EATON WASH
SPREADING GROUNDS BASIN ENLARGEMENT

GRADING PLAN

FCC0001211 | JOB EF02511126 | DWG 24-D79.2 | SHEET 2 OF 13

PS-DF 5/99

DRAFTER O. Yco | DESIGNER O. Yco | CHECKER M. TERRELL | CADD PROJECT FILE NAME | REVIEWED BY | DATE

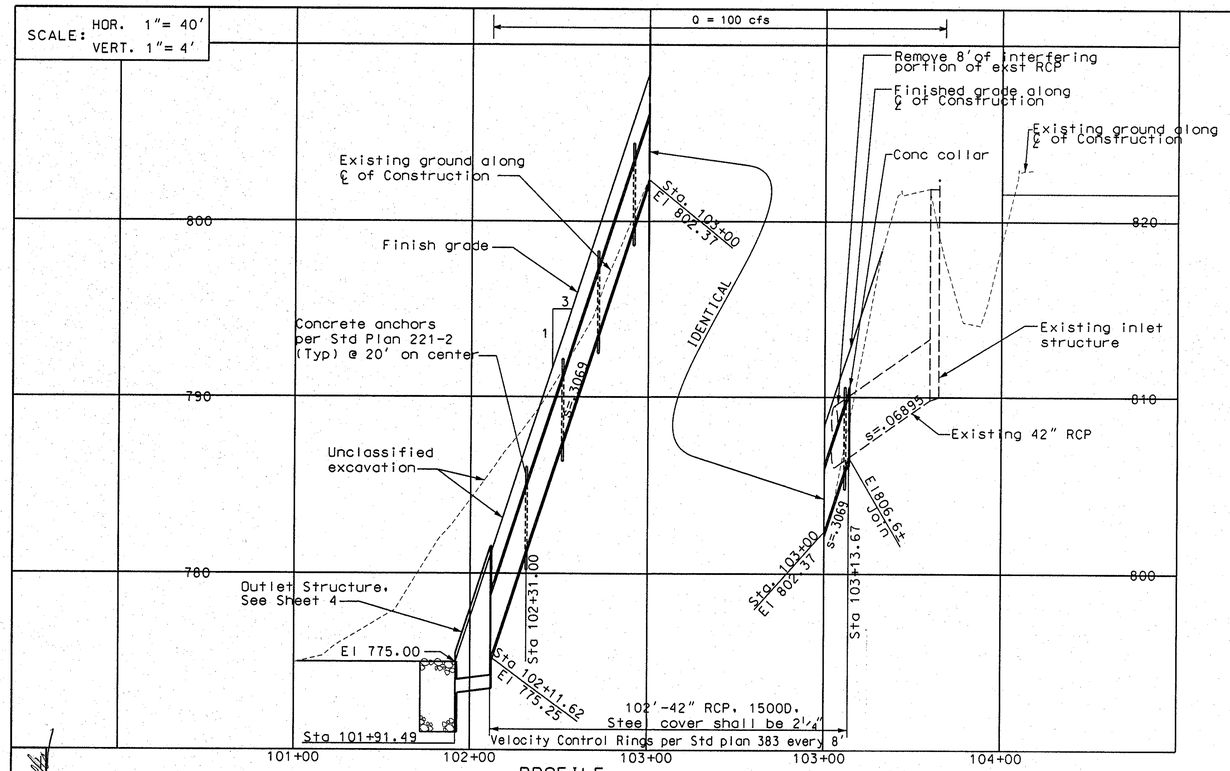

PROFILE

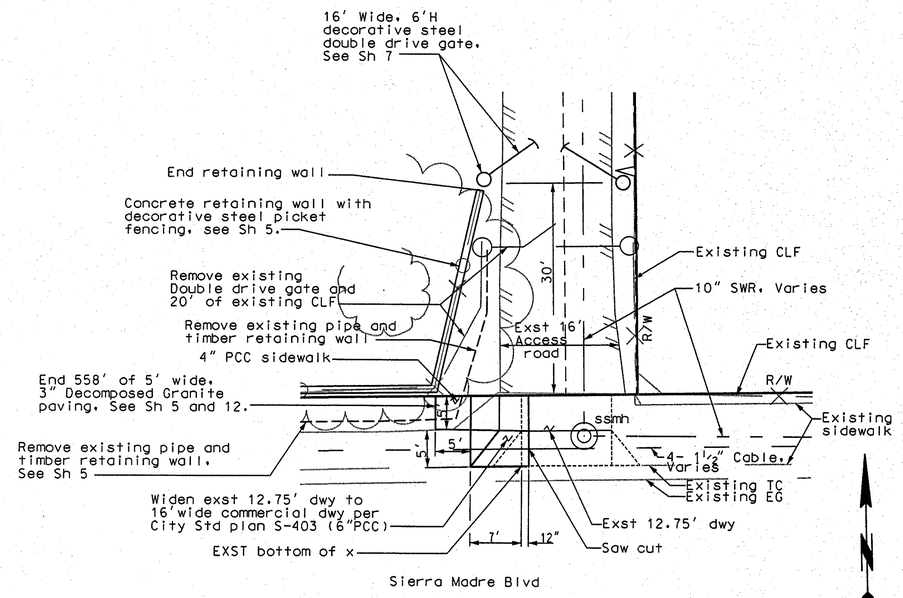

SOUTHEAST ENTRANCE PLAN (SH 2)

SCALE: 1"=10'

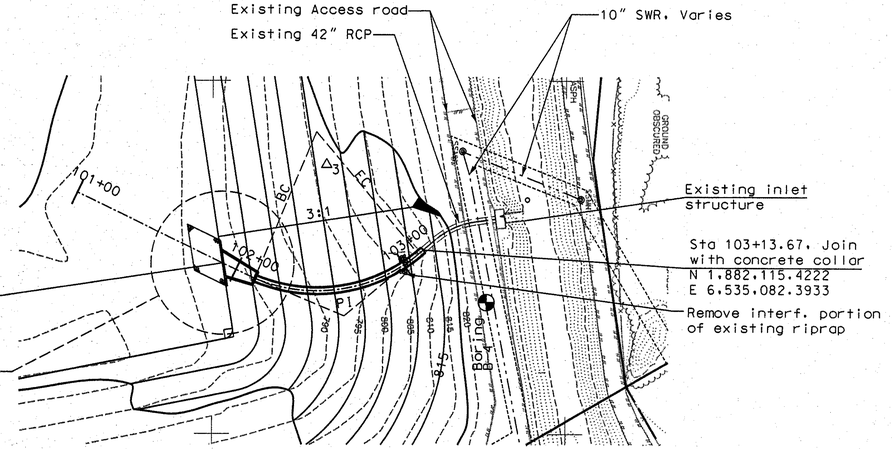

PIPE EXTENSION PLAN (SH 2)

SCALE: 1"=40'

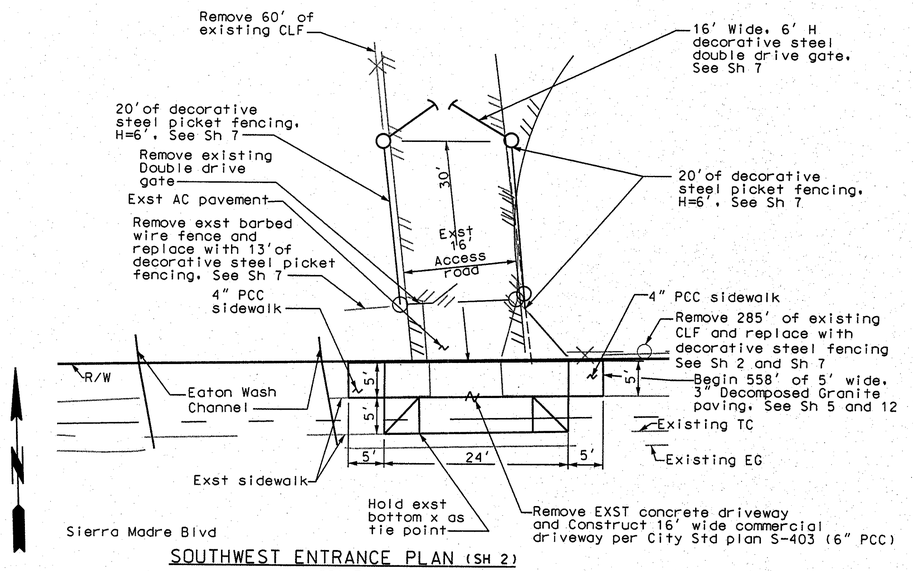

SOUTHWEST ENTRANCE PLAN (SH 2)

SCALE: 1"=10'

BENCH MARK

BM NO. AT-9 El 805.00
FD. GEAR SPK & W
STAMPED HF1 CP 309 FL
N 1,881,208.6091
E 6,535,759.5922

℄ Construction Curve Data

Δ_3 = 62°40'33"
R = 90'
T = 54.80'
L = 98.45'
BC= Sta. 102+11.62
EC= Sta. 103+10.07
PI= N 1,882,070.7384
E 6,535,119.8875

NOTE:

1. See Sh 4 for pipe bedding detail.

DATE	MK	DESCRIPTION

REVISIONS

REGISTERED PROFESSIONAL ENGINEER — OURIE YCO — NO. C63691 — EXP. 09-30-12 — CIVIL — STATE OF CALIFORNIA

PROJECT ENGINEER — DATE 6/14/12

COUNTY OF LOS ANGELES DEPARTMENT OF PUBLIC WORKS

EATON WASH
SPREADING GROUNDS BASIN ENLARGEMENT

PIPE EXTENSION
PLAN & PROFILE

FCC0001211	JOB EF02511126	DWG 24-D79.3	SHEET 3 OF 13

PPS-DF 5/99

DRAFTER O. YCO | DESIGNER O. YCO | CHECKER M. TERRELL | CADD PROJECT FILE NAME FCC0001211-EATON WASH SG BASIN ENLARGEMENT.dgn | REVIEWED BY | DATE 6/14/12

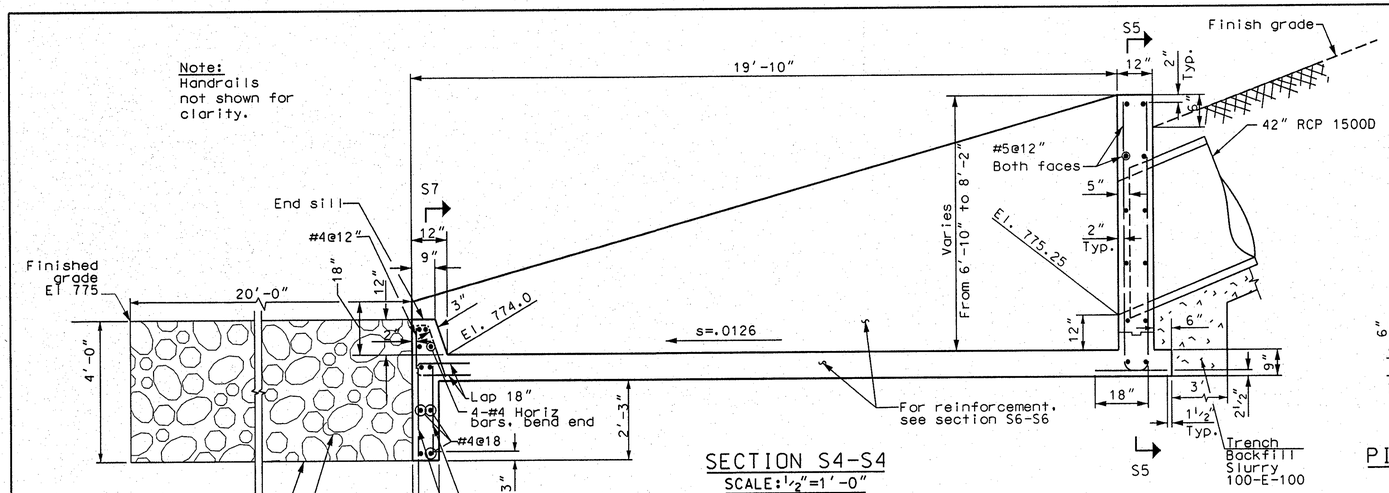

SECTION S4-S4
SCALE: ½"=1'-0"

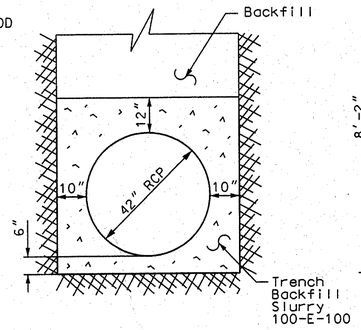

PIPE BEDDING DETAIL (SH 3)
NOT TO SCALE

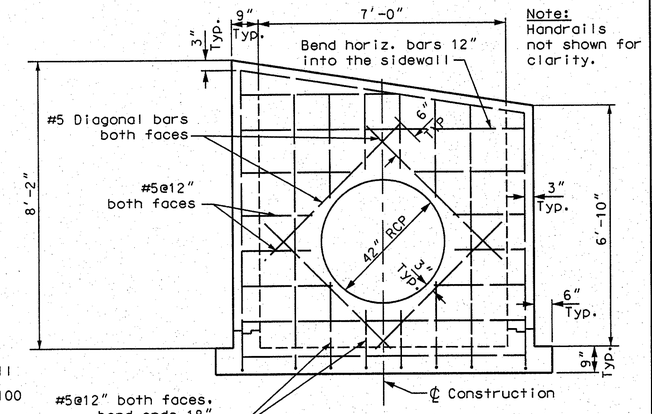

SECTION S5-S5
SCALE: ½"=1'-0"

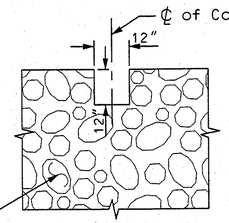

LOW FLOW NOTCH
SCALE: ½"=1'-0"

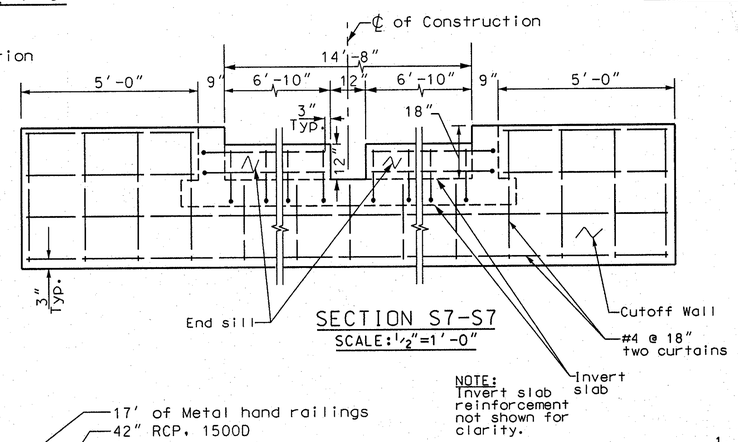

SECTION S7-S7
SCALE: ½"=1'-0"

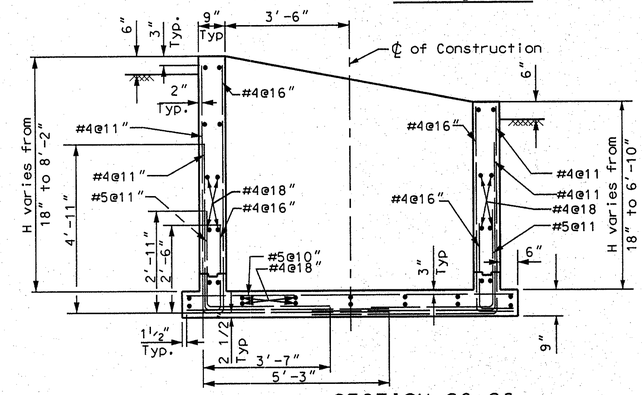

SECTION S6-S6
SCALE: ½"=1'-0"

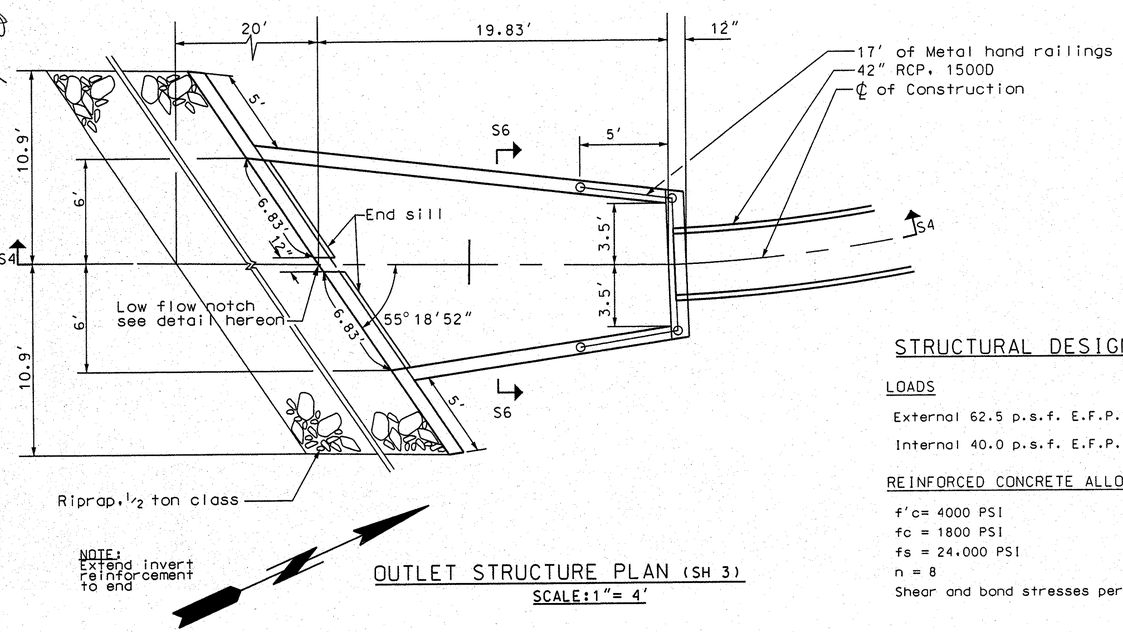

NOTE:
Extend invert
reinforcement
to end

OUTLET STRUCTURE PLAN (SH 3)
SCALE: 1"= 4'

STRUCTURAL DESIGN CRITERIA

LOADS

External 62.5 p.s.f. E.F.P.

Internal 40.0 p.s.f. E.F.P.

REINFORCED CONCRETE ALLOWABLE STRESSES

f'c= 4000 PSI
fc = 1800 PSI
fs = 24,000 PSI
n = 8
Shear and bond stresses per A.C.I. 318-89

STRUCTURAL NOTES

1. DIMENSIONS FROM FACE OF CONCRETE TO STEEL ARE TO CENTER OF BAR, UNLESS OTHERWISE SHOWN.
2. CONCRETE DIMENSIONS SHALL BE MEASURED HORIZONTALLY OR VERTICALLY ON THE PROFILE, AND PARALLEL TO OR AT RIGHT ANGLES (RADIALLY) TO THE CENTER LINE EXCEPT OTHERWISE SHOWN.
3. ALL BAR BENDS AND HOOKS SHALL CONFORM TO THE AMERICAN CONCRETE INSTITUTE'S "BUILDING CODE REQUIREMENTS FOR REINFORCED CONCRETE" LATEST EDITION.
4. PLACING OF REINFORCEMENT BARS SHALL CONFORM TO THE AMERICAN CONCRETE INSTITUTE'S "BUILDING CODE REQUIREMENTS FOR REINFORCED CONCRETE" LATEST EDITION, SECTION 7.5.
5. TRANSVERSE CONSTRUCTION JOINTS IN WALLS AND SLABS SHALL BE IN THE SAME PLANE. NO STAGGERING OF JOINTS WILL BE PERMITTED.TRANSVERSE CONSTRUCTION JOINTS SHALL BE NORMAL OR RADIAL TO THE CENTER LINE OF CONSTRUCTION, UNLESS OTHERWISE SHOWN.
6. TRANSVERSE REINFORCING BARS SHALL TERMINATE ONE AND ONE-HALF INCHES FROM THE CONCRETE SURFACES UNLESS OTHERWISE SHOWN.
7. EXPOSED EDGES OF CONCRETE MEMBERS SHALL BE ROUNDED OR BEVELED.
8. NO SPLICES IN TRANSVERSE BAR REINFORCEMENT WILL BE PERMITTED OTHER THAN THAT SHOWN ON THE PLANS WITHOUT APPROVAL OF THE ENGINEER. NO MORE THAN TWO SPLICES WILL BE PERMITTED IN ANY LONGITUDINAL BAR BETWEEN TRANSVERSE JOINTS. SPLICES SHALL BE STAGGERED.
9. LONGITUDINAL BARS SHALL BE LAPPED 20 BAR DIAMETERS AT SPLICES. TRANSVERSE BARS SHALL BE LAPPED 45 BAR DIAMETERS AT SPLICES.
10. LONGITUDINAL BARS SHALL TERMINATE TWO INCHES FROM TRANSVERSE CONSTRUCTION JOINTS.
11. AT THE BEGINING AND ENDING OF ALL POURS, A COMPLETE CURTAIN OF REINFORCEMENT BARS SHALL BE PLACED THREE INCHES FROM THE TRANSVERSE CONSTRUCTION JOINTS.
12. TRANSVERSE JOINTS SHALL BE SPACED NOT TO EXCEED 50 FEET NOR BE LESS THAN 10 FEET, MEASURED ALONG THE CENTERLINE OF CONSTRUCTION, EXCEPT AS OTHERWISE SHOWN ON THE PLANS.

DATE	MK	DESCRIPTION

REVISIONS

REGISTERED PROFESSIONAL ENGINEER
OURIE YCO
NO. C63691
EXP. 09-30-12
CIVIL
STATE OF CALIFORNIA

PROJECT ENGINEER — DATE 6/15/12

COUNTY OF LOS ANGELES DEPARTMENT OF PUBLIC WORKS

EATON WASH

SPREADING GROUNDS BASIN ENLARGEMENT

OUTLET STRUCTURE DETAILS

PIN FCC0001211 | JOB EF02511126 | DWG 24-D79.4 | SHEET 4 OF 13

TS-DP 07/05

DRAFTER G. ARANKI | DESIGNER G. ARANKI | CHECKER A. MOHSEN | CADD PROJECT FILE NAME EATON WASH SH. 4 | REVIEWED BY | DATE

DATE: $DATE$ TIME: $TIME$ FILE: $FILEL$

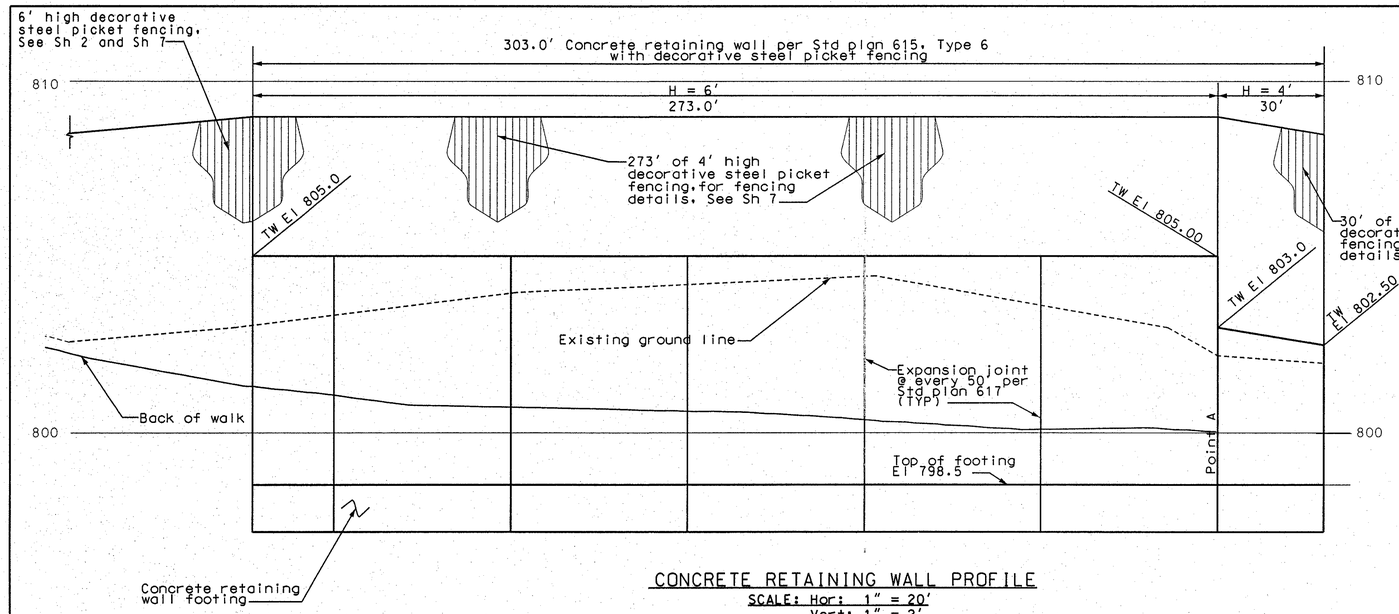

CONCRETE RETAINING WALL PROFILE

SCALE: Hor: 1" = 20'
Vert: 1" = 2'

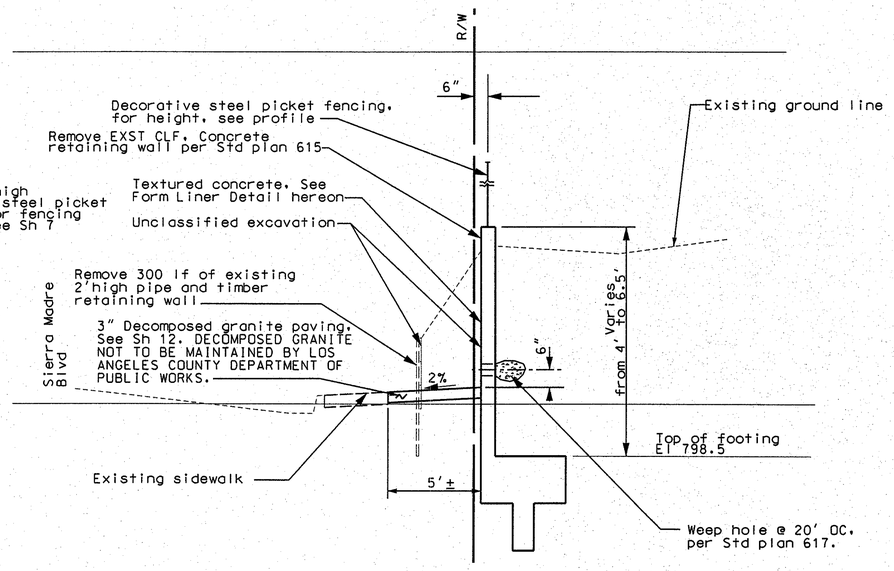

CONCRETE RETAINING WALL SECTION

SCALE: Hor: 1" = 5'
Vert: 1" = 2'

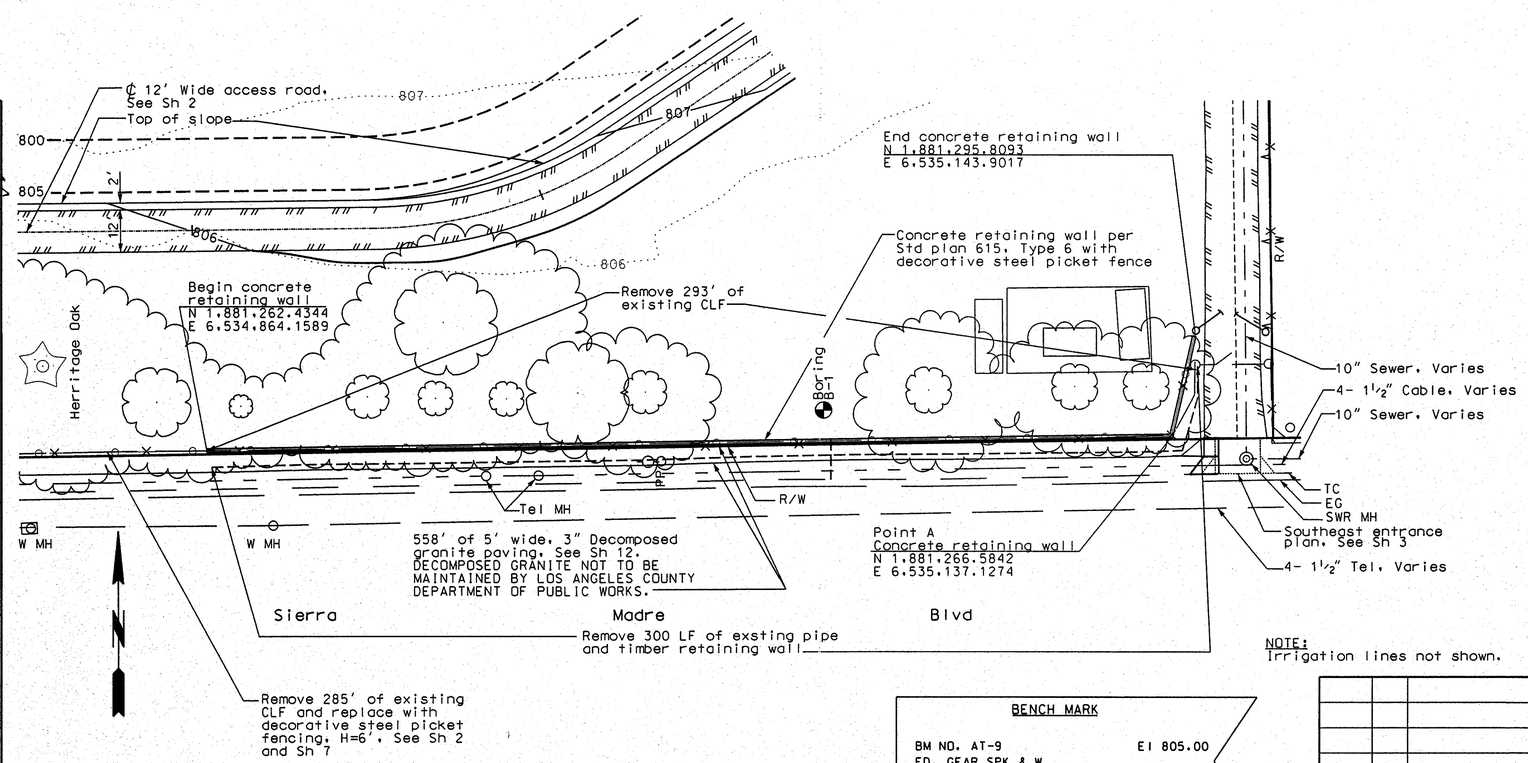

PLAN (SH 2)

SCALE: 1" = 20'

NOTE:
Irrigation lines not shown.

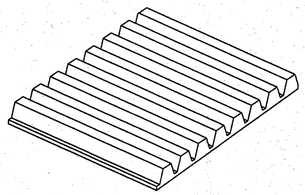

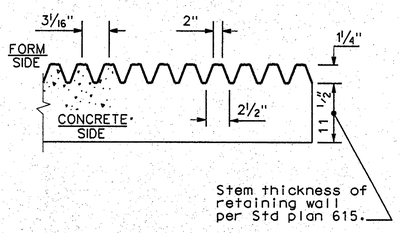

FORM LINER DETAIL

NOT TO SCALE

NOTES:

1) LINER SHALL BE A VERTICAL RIBBED TRAPEZOID PATTERN WITH THE RIB FACES HAVING A FRACTURED OR AGGREGATE TEXTURED FACE OR AS OTHERWISE APPROVED.

2) EXTEND TEXTURE PATTERNS 4" MINIMUM BELOW FINISHED GRADE.

BENCH MARK

BM NO. AT-9 — El 805.00
FD. GEAR SPK & W
STAMPED HF1 CP 309 FL
N 1,881,208.6091
E 6,535,759.5922

DATE	MK	DESCRIPTION

REVISIONS

REGISTERED PROFESSIONAL ENGINEER — OURIE YCO — NO. C63691 — EXP. 09-30-12 — CIVIL — STATE OF CALIFORNIA

PROJECT ENGINEER — DATE 6/14/12

COUNTY OF LOS ANGELES DEPARTMENT OF PUBLIC WORKS

EATON WASH
SPREADING GROUNDS BASIN ENLARGEMENT

RETAINING WALL PLAN AND PROFILE

FCC0001211 | JOBEF02511126 | DWG 24-D79.5 | SHEET 5 OF 13

PS-OF 5/99

DRAFTER O. YCO | DESIGNER O. YCO | CHECKER M. TERRELL | CADD PROJECT FILE NAME FCC001211 | REVIEWED BY | DATE 6/14/12

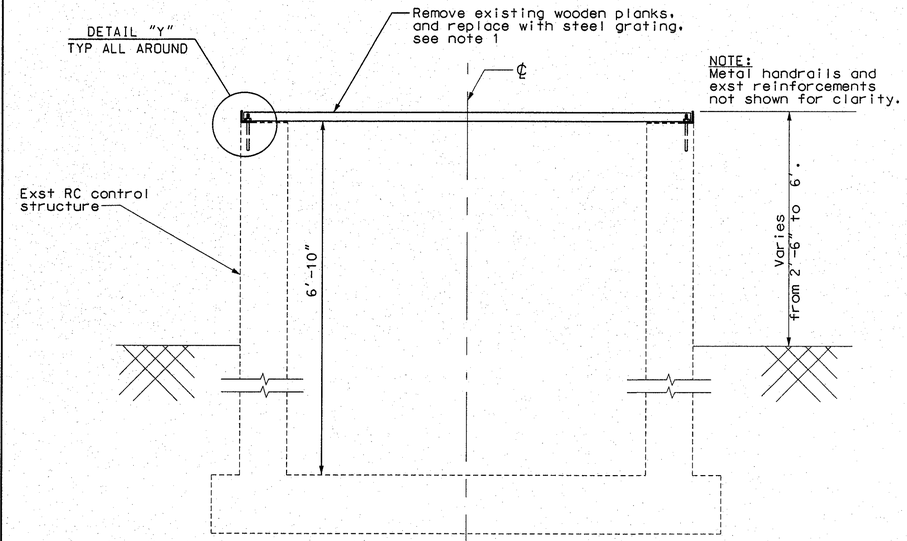

SECTION "S-S"
SCALE 1" = 1'

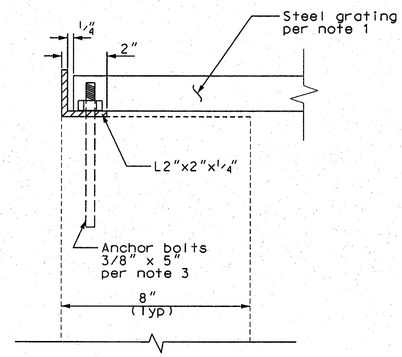

DETAIL "Y"
GRATING SUPPORT LEDGE
NOT TO SCALE

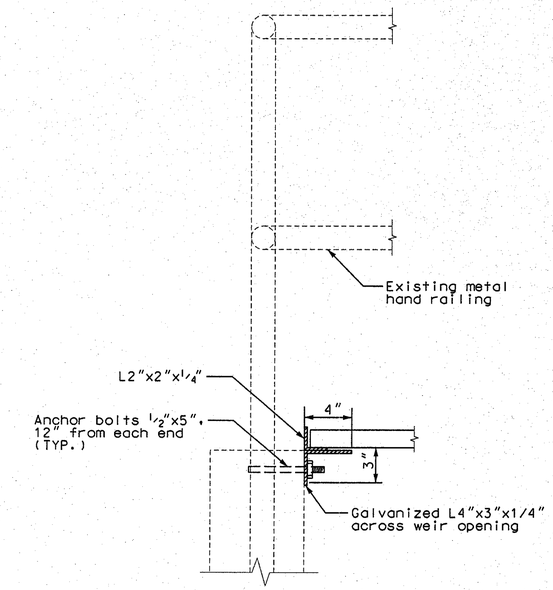

SECTION "K-K"
NOT TO SCALE

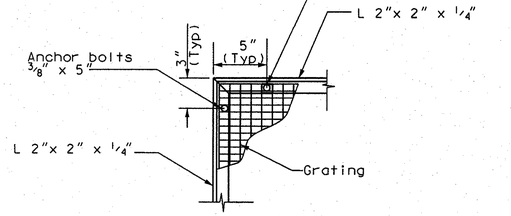

DETAIL L
CORNER DETAIL
NOT TO SCALE

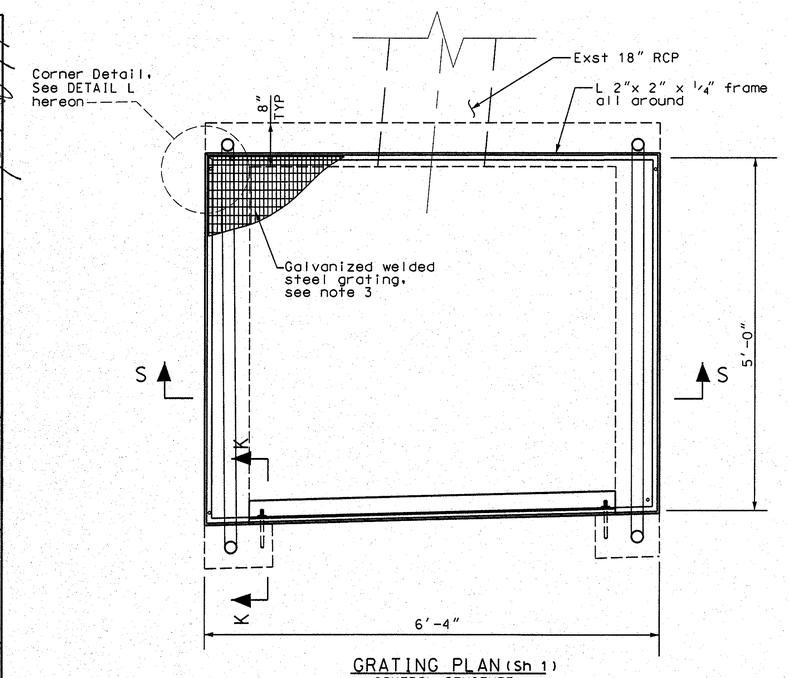

GRATING PLAN (Sh 1)
CONTROL STUCTURE
SCALE 1" = 1'

NOTES:

1. Galvanized welded steel grating 5' x 6'-4". Bearing bars shall be 1 1/2"x3/16" @ 1 3/16" OC; cross bars shall be @ 4" OC. Bearing bars shall be parallel with the shortest span.
2. Galvanize all steel for grating support ledge and anchor bolt tabs after fabrication.
3. Weld 1/8" thick steel tabs to grate and drill holes for 3/8" anchor bolts. 8 tabs (2 each side) are required.

DRAFTER	DESIGNER	CHECKER	CADD PROJECT FILE NAME	REVIEWED BY	DATE
S. EK	Q. YCO	M. TERRELL	FCC0001211		

DATE	MK	DESCRIPTION

REVISIONS

REGISTERED PROFESSIONAL ENGINEER
QURIE YCO
NO. C63691
EXP. 09-30-12
CIVIL
STATE OF CALIFORNIA

PROJECT ENGINEER — DATE 6/11/12

COUNTY OF LOS ANGELES DEPARTMENT OF PUBLIC WORKS

EATON WASH
SPREADING GROUNDS BASIN ENLARGEMENT

CONTROL STRUCTURE GRATING DETAILS

FCC0001211 | JOBEFO2511126 | DWG 24-D79.6 | SHEET 6 OF 13

PS-OF 5/99

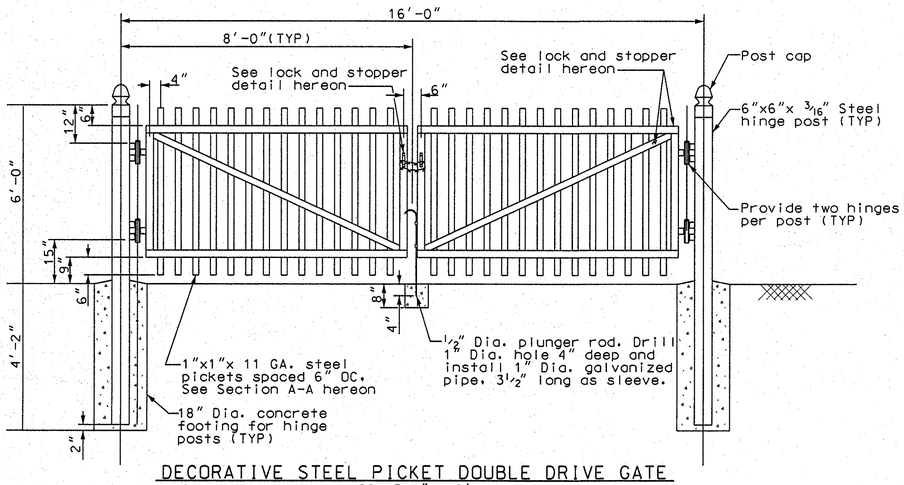

DECORATIVE STEEL PICKET DOUBLE DRIVE GATE
SCALE 1" = 2'

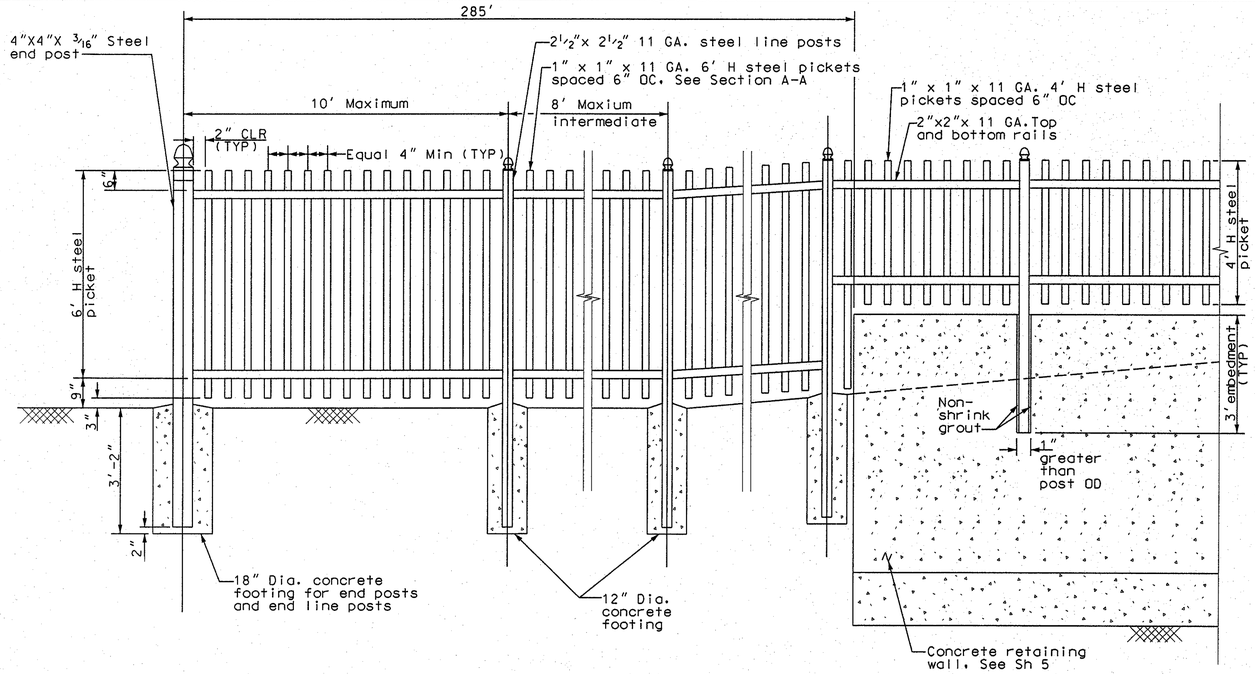

DECORATIVE STEEL PICKET FENCING
NOT TO SCALE

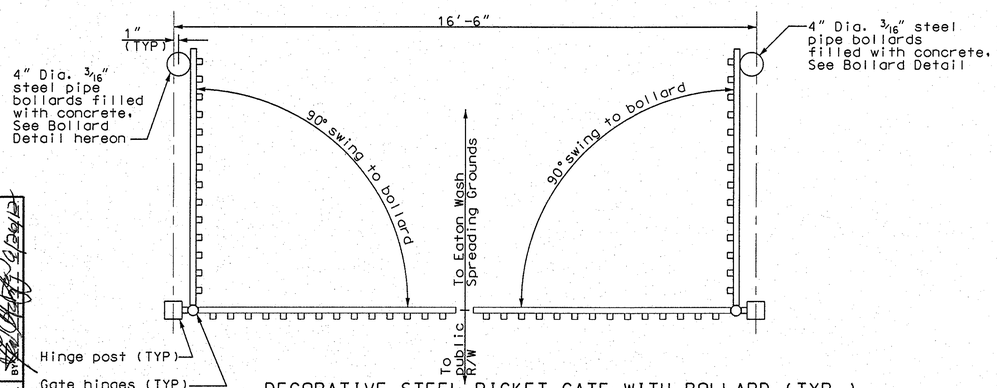

DECORATIVE STEEL PICKET GATE WITH BOLLARD (TYP.)
SCALE 1" = 2'

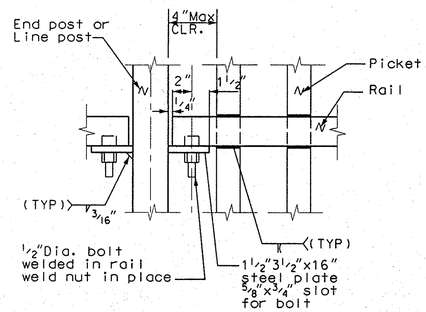

RAIL ATTACHMENT
(TOP & BOTTOM RAILS)
NOT TO SCALE

NOTES:

1. ALL DECORATIVE STEEL FENCE AND GATE SHALL CONFORM TO ASTM A513.
2. ALL WELDING SHALL CONFORM TO THE REQUIREMENT OF THE SCRUCTURAL WELDING CODE AWS D1.1, LATEST EDITIONS.
3. ALL ELECTRODES SHALL BE E60XX SERIES.
4. ALL WELDS SHALL BE GROUNDED SMOOTH.
5. ALL BOLTS SHALL CONFORM TO THE REQUIREMENTS OF ASTM A307.
6. ALL BOLTS, NUTS, PLATES, HINGES, RODS, SLEEVES AND CHAINS SHALL BE POWDER COATED BLACK E300-BK147, CARDINAL INDUSTRIAL FINISHES OR AGENCY APPROVED EQUAL.
7. ALL POSTS, PICKETS, FRAMES, AND RAILS SHALL BE TUBULAR STEEL POWDER COATED BLACK, E300-BK147, CARDINAL INDUSTRIAL FINISHES OR AGENCY APPROVED EQUAL.
8. ALL POSTS SHALL HAVE POST CAPS WELDED TO TOP ENDS.
9. THE INTENT OF THIS DRAWING IS TO SHOW DESIGN CONCEPT ONLY. CONTRACTOR SHALL SUBMIT SHOP DRAWINGS FOR THE PICKET FENCE AND GATE FOR APPROVAL PRIOR TO FABRICATION.

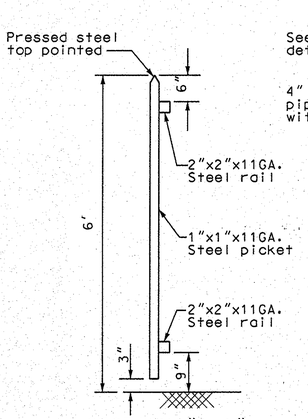

SECTION "A-A"
6' H DECORATIVE STEEL PICKET FENCE
NOT TO SCALE

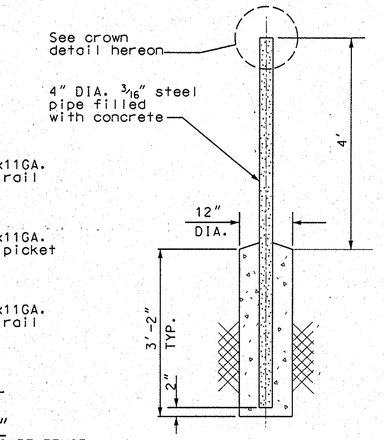

BOLLARD DETAIL
NOT TO SCALE

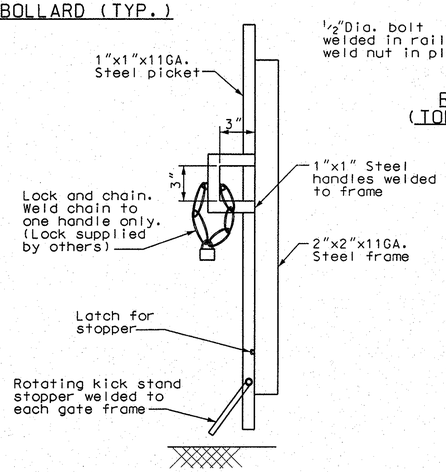

LOCK AND STOPPER DETAIL
NOT TO SCALE

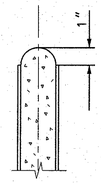

CROWN DETAIL
SCALE 1/2" = 1'

DATE	MK	DESCRIPTION

REVISIONS

REGISTERED PROFESSIONAL ENGINEER
QURIE YCO
NO. C63691
EXP. 09-30-12
CIVIL
STATE OF CALIFORNIA

PROJECT ENGINEER 6/14/12 DATE

COUNTY OF LOS ANGELES DEPARTMENT OF PUBLIC WORKS

EATON WASH
SPREADING GROUNDS BASIN ENLARGEMENT

DECORATIVE STEEL PICKET FENCE

FCC0001211 | JOBEF02511126 | DWG 24-D79.7 | SHEET 7 OF 13

PS-OF 5/99

DRAFTER S. EK | DESIGNER Q. YCO | CHECKER M. TERRELL | CADD PROJECT FILE NAME FCC0001211 | REVISED BY | DATE

GENERAL CONSTRUCTION/REMOVAL NOTES:

1. PLANS ARE DIAGRAMMATIC. THE CONTRACTOR SHALL BRING TO THE ATTENTION OF THE ENGINEER ANY PERCEIVED DISCREPANCY BEFORE THE START OF CONSTRUCTION.
2. THE CONTRACTOR SHALL REMOVE ALL VISIBLE, ABANDONED IRRIGATION LINES ALONG THE CHAIN LINK FENCE. OBTAIN APPROVAL FROM THE ENGINEER PRIOR TO REMOVAL.
3. SEE SHEET LS-4.1 FOR CONSTRUCTION DETAILS.
4. ALL EXISTING ELEMENTS NOT DESIGNATED TO BE REMOVED SHALL BE PROTECTED IN PLACE.
5. CONTRACTOR SHALL INSTALL JUTE MATTING ON SLOPE STEEPER THAN 3:1. REFER TO SPECIAL PROVISIONS FOR ADDITIONAL INFORMATION.
6. FOR PROPOSED PLANTING AREAS, CONTRACTOR SHALL REMOVE AND DISPOSE ALL EXISTING SOIL INCLUDING PAVEMENT MATERIAL, CONCRETE, A.C., BASE MATERIAL WITHIN EACH PLANTING PIT. SEE SHEET LS-2.1 FOR REMOVAL PLAN.
7. CONTRACTOR SHALL REMOVE AND DISPOSE OFF SITE ALL ROCKS LARGER THAN 1" DIAMETER DURING EXCAVATION OF IRRIGATION PIPES AND PLANTING PITS.
8. REPAIR ALL EXISTING MATERIALS DAMAGED OR EXPOSED BY REMOVAL WORK OR BY ANY OTHER CONSTRUCTION WORK - MATCH EXISTING ADJACENT WORK IN CONSTRUCTION, MATERIALS, TEXTURE AND COLOR.
9. CONTRACTOR SHALL REMOVE ALL EXISTING NERIUM OLEANDER CLUMPS INCLUDING ROOT STUMPS ALONG THE EXISTING CHAIN LINK FENCE ON SIERRA MADRE BLVD.

IRRIGATION INSTALLATION NOTES:

1. TRENCHING OPTION: CONTRACTOR HAS AS AN OPTION TO INSTALL LATERAL IRRIGATION LINES UTILIZING A TRENCHLESS TECHNIQUE (DIRECTIONAL BORING) WHERE POSSIBLE.
2. CONTRACTOR SHALL FIELD VERIFY ALL EXISTING CONDITIONS AND DIMENSIONS AND SHALL NOTIFY THE ENGINEER OF ANY DISCREPANCIES PRIOR TO START OF CONSTRUCTION.
3. CONTRACTOR TO VERIFY LOCATIONS OF ALL EXISTING TREES AND OTHER PLANTS IN THE AREAS OF WORK PRIOR TO START OF CONSTRUCTION. CONTRACTOR SHALL NOT INSTALL BELOW GRADE IRRIGATION EQUIPMENT UNDER THE DRIP ZONE OF ANY EXISTING OAK OR ANY TREES PROTECTED BY CITY OF PASADENA OR THE STATE OF CALIFORNIA.
4. INSTALL PVC SCHEDULE 40 CONDUIT UNDER EXISTING PAVING WHEREVER NECESSARY TO "RUN" CONTROL WIRES. INSTALL CONTROL WIRES A MINIMUM 24" BELOW FINISH GRADE AND 36" UNDER VEHICULAR ROADWAY.
5. ALL VERTICAL CHANGES IN MAINLINE PIPE DIRECTION SHALL BE DONE WITH THE USE OF 45 DEGREE ELBOWS.
6. LATERAL SUPPLY LINES FROM THE VALVE TO THE FIRST HEAD SHALL BE ONE SIZE LARGER THAN THE VALVE, UNLESS OTHERWISE NOTED.
7. SEE PLANS FOR AVAILABLE WATER PRESSURE AT THE P.O.C. AND WATER PURVEYOR'S INFORMATION. NOTIFY THE ENGINEER IF THERE IS A DISCREPANCY WITH CONTRACTORS FINDING AND WHAT IS INDICATED ON THE PLANS.
8. REPAIR ALL EXISTING MATERIALS DAMAGED OR EXPOSED BY NEW IRRIGATION INSTALLATION WORK OR BY ANY OTHER CONSTRUCTION WORK, MATCH EXISTING ADJACENT WORK IN TEXTURE AND COLOR.
9. ALL QUICK COUPLING VALVES SHALL BE INSTALLED IN RECTANGULAR, LOCK LID CONCRETE VALVE BOXES. IDENTIFY ALL VALVE BOXES WITH "QCV" USING YELLOW EPOXY PAINT IN 2 INCH HIGH LETTERS.
10. IRRIGATION HEADS SHALL BE PROPERLY POSITIONED TO ALLOW STANDARD OPERATION, RETRACTION, AND SHALL BE ADJUSTED SO THERE IS NO OVER-SPRAYING ONTO ADJACENT SIDEWALKS, PAVEMENT(S), AND ROADWAYS.
11. CONTRACTOR SHALL MAKE ALL NECESSARY ADJUSTMENTS TO ENSURE THAT ALL COMPONENTS OF THE IRRIGATION SYSTEM PERFORM PROPERLY DURING CONSTRUCTION AND MAINTENANCE PERIODS.
12. ADJUST LOCATION OF IRRIGATION HEADS AS NECESSARY TO MINIMIZE SPRAY INTERFERENCE AGAINST OBSTRUCTIONS (CONCRETE WALLS, TELEPHONE AND POWER POLES, TREES, ETC.).
13. ADJUST ALL ADJUSTABLE ARC NOZZLES AS NECESSARY TO AVOID UNDER-SPRAY OF PLANTING AREAS AND OVER-SPRAY OF WALLS AND SIDEWALKS.
14. FOLLOWING IRRIGATION HEAD INSTALLATION, ADJUST RADIUS THROW TO CONFORM TO SITE CONDITIONS.
15. CONTRACTOR SHALL VERIFY THE FIELD CONDITIONS AND INSTALL ADDITIONAL IN-LINE CHECK VALVES WHEREVER NECESSARY TO PREVENT LOW-HEAD DRAINAGE.
16. ALL PROPOSED TREES ARE TO BE WATERED BY A SEPARATE BUBBLER SYSTEM. SEE IRRIGATION DETAIL FOR BUBBLER INSTALLATION.
17. INSTALL X-OVER SLEEVES (CLASS 315 PVC UNLESS NOTED OTHERWISE) WHERE SHOWN ON THE PLANS, AT INTERSECTIONS, AND WHEREVER PIPE CROSSES UNDER PAVEMENTS. ALL SLEEVES SHALL EXTEND 6" INTO PLANTING AREAS AT BOTH ENDS. CONTRACTOR SHALL COORDINATE THE INSTALLATION OF THE SLEEVES PRIOR TO PAVING/PATH/ETC. BEING INSTALLED. NOT ALL SLEEVES MAY BE INDICATED ON PLANS.
18. "BORE" UNDER EXISTING PAVING WHEREVER POSSIBLE. SAWCUT EXISTING PAVING WHERE NECESSARY AS APPROVED TO INSTALL PIPING/SLEEVE. FOR TRENCH REPAIR INFORMATION, REFER TO SHEET LS-4.1.
19. CONTRACTOR SHALL ADJUST EXACT LOCATIONS OF IRRIGATION PIPES TO AVOID CATCH BASINS AND OTHER SITE AMENITIES.
20. ALL HEADS WITH CHECK VALVES AND PRESSURE REGULATION DEVICES IN POP-UP STEM SHALL BE CONNECTED THROUGH BOTTOM INLET AND NOT SIDE INLET.

GENERAL PLANTING NOTES:

1. PLANT QUANTITIES IN LEGEND IS FOR CONTRACTOR'S CONVENIENCE ONLY. CONTRACTOR IS RESPONSIBLE FOR PROVIDING ALL PLANTS SHOWN ON PLANTING PLANS.
2. ALL TREES ARE TO BE PLANTED MIN. 20' FROM EXISTING POWER POLES (WHERE APPLICABLE).
3. CONTRACTOR SHALL PROVIDE 3" DEEP LAYERS OF MEDIUM TO FINE TEXTURED (3/4" TO 2") GROUND WOOD BY-PRODUCT OR SHREDDED BARK MULCH TO ALL PLANTED AREAS. COLOR OF MULCH SHALL BE DARK.
4. CONTRACTOR SHALL INSTALL AN EDGING MATERIAL SEPARATING PLANTING AND RIVER ROCK PAVING AREAS.
5. PLANS ARE DIAGRAMMATIC. THE CONTRACTOR SHALL BRING TO THE ATTENTION OF THE ENGINEER ANY PERCEIVED DISCREPANCY BEFORE THE START OF CONSTRUCTION.
6. CONTRACTOR SHALL PROVIDE AND INSTALL IMPORTED TOPSOIL TO FILL IN AREAS WHERE PLANTINGS ARE PROPOSED. IMPORTED TOPSOIL SHALL CONFORM TO SECTION L, LANDSCAPE OF SPECIAL PROVISIONS. AN AGRONOMICAL SOIL'S REPORT SHALL BE SUBMITTED PER 1.02-2 OF THE SAME SECTION, REVIEWED AND APPROVED BY THE ENGINEER PRIOR TO THE DELIVERY OF THE SOIL ON SITE.
7. REFER TO CONSTRUCTION PLANS FOR EXACT LOCATION OF EXISTING PLANT MATERIALS TO BE SAVED IN PLACE OR RELOCATED.
8. CONTRACTOR SHALL PRUNE AND REMOVE DEAD BRANCHES FROM ALL EXISTING TREES AND SHRUBS TO REMAIN. FOR ALL EXISTING TREES 12 FEET AND HIGHER, REMOVE ALL BRANCHES 7 FEET ABOVE ADJACENT GROUND (MEASURED AT UPPER SIDE OF SLOPE).
9. ALL 5 GALLON SHRUBS ARE TO BE PLANTED MIN. 6' FROM BACK OF THE CHAIN LINK FENCE OR RETAINING WALL, TO CENTER POINT OF PLANT.
10. ANY SOIL PREPARATION AND PLANTING WITHIN THE DRIP LINE OF THE EXISTING TREES SHALL BE DONE BY HAND.

SHEET INDEX:

SHEET	TITLE
LS-1.1	LANDSCAPING GENERAL NOTES
LS-1.2	LEGENDS
LS-2.1	IRRIGATION PLAN
LS-3.1	PLANTING PLAN
LS-4.1	DETAILS

TOTAL PROJECT AREA:

PLANTING AREA TOTAL:	4830 SF
HARDSCAPE AREA TOTAL:	0 SF
EXISTING HARDSCAPE TO REMAIN:	0 SF
TOTAL PROJECT AREA:	4830 SF

(NOTE: THE INFORMATION ABOVE DOES NOT SUPERCEDE OR TAKE PRECEDENCE OVER ANY OF THE CONTRACT DOCUMENTS. THE INFORMATION ABOVE IS FOR PURPOSES INTERNAL TO THE AGENCY AND NOT FOR CONTRACT ADMINISTRATION.)

PROJECT LIMIT

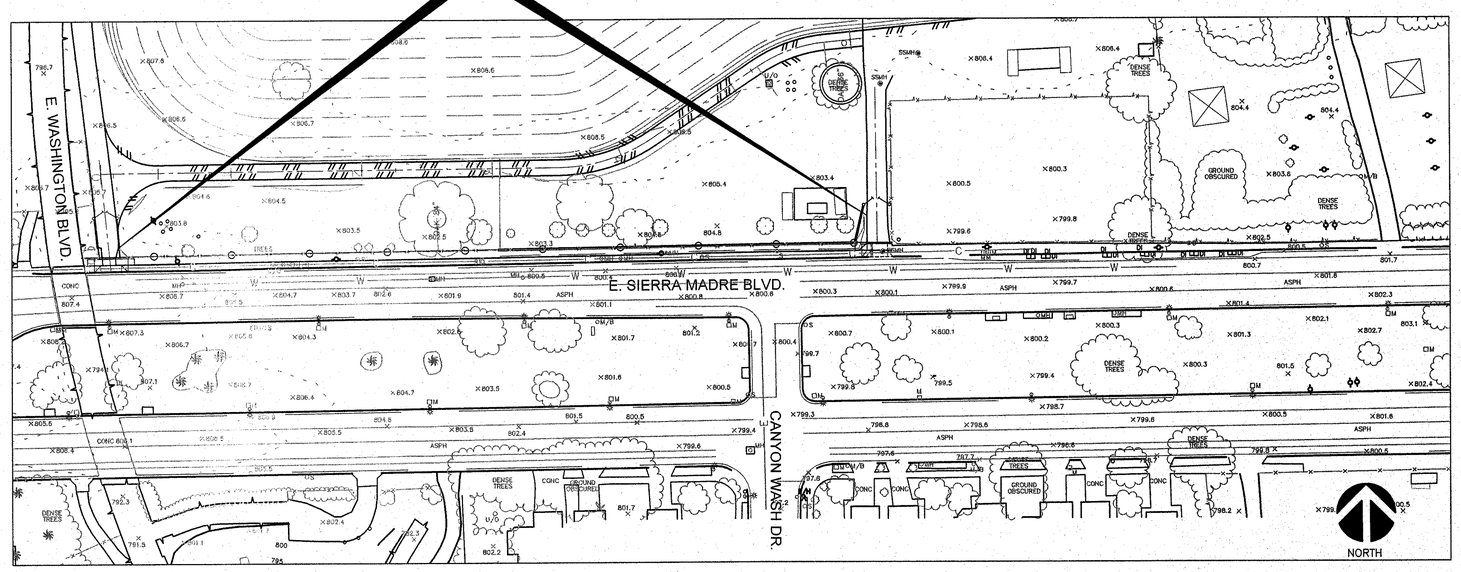

DATE	MK	DESCRIPTION

REVISIONS

REGISTERED LANDSCAPE ARCHITECT
RICHARD SHIEH
NO. 3568
EXP. 7/31/2013
STATE OF CALIFORNIA

PROJECT LANDSCAPE ARCHITECT — DATE 6/14/12

COUNTY OF LOS ANGELES DEPARTMENT OF PUBLIC WORKS

EATON WASH

SPREADING GROUNDS BASIN ENLARGEMENT

LANDSCAPING GENERAL NOTES — LS-1.1

DATE: 6/14/2012 | PCA EF02511126 | FCC0001211 | SHEET 8 OF 13

ABBREVIATION / ACRONYM LEGEND

&	AND	N	NORTH
@	AT	NIC	NOT IN CONTRACT
℄	CENTERLINE	NO	NUMBER
Ø	DIAMETER	NOM	NOMINAL
#	NUMBER OR POUNDS	NTS	NOT TO SCALE
AC	ASPHALTIC CONCRETE	OC	ON CENTER
AD	AREA DRAIN	OD	OUTSIDE DIAMETER
AGG	AGGREGATE	PA	PLANTING AREA
ALT	ALTERNATIVE	PB	PULL BOX
ARCH	ARCHITECT	PERF	PERFORATED
ASPH	ASPHALT	PL	PROPERTY LINE
AVE	AVENUE	PLYWD	PLYWOOD
BC	BOTTOM OF CURB OR BEGINNING OF CURVE	POC	POINT OF CONNECTION
		PP	POWER POLE
		PREFAB	PREFABRICATED
BLDG	BUILDING	PROP	PROPERTY
		PT	PRESSURE TREATED
BLVD	BOULEVARD	PVMT	PAVEMENT
BM	BENCH MARK		
BW	BOTH WAYS	QC	QUICK COUPLER
CB	CATCH BASIN		
CJ	CONTROL JOINT	R	RISER OR RADIUS
CLF	CHAIN LINK FENCE	RAD	RADIUS
CLR	CLEAR	RCV	REMOTE CONTROL VALVE
CMU	CONCRETE MASONRY UNIT	RD	ROAD
CO	CLEAN OUT	REINF	REINFORCED
CONC	CONCRETE	REV	REVISED OR REVISION
CONT	CONTINUOUS, CONTINUED	ROW	RIGHT OF WAY
		RWD	REDWOOD
DEPT	DEPARTMENT		
DET	DETAIL	S	SOUTH
DF	DOUGLAS FIR	SCE	SOUTHERN CALIFORNIA EDISON
DG	DECOMPOSED GRANITE	SCH	SCHEDULE
DIA	DIAMETER	SD	STORM DRAIN
DIM	DIMENSION	SEC	SECTION
DPW	DEPARTMENT OF PUBLIC WORKS	SHT	SHEET
DWG	DRAWING	SIM	SIMILAR
DWP	DEPARTMENT OF WATER AND POWER	SPEC	SPECIFICATION
		SQ	SQUARE
		ST	STREET
E	EAST	SYM	SYMBOL
EXIST	EXISTING		
EA	EACH	T	TREADS
EJ	EXPANSION JOINT	TC	TOP OF CURB
ELEV	ELEVATION	TOD	TOP OF DRAIN
ELEC	ELECTRICAL	TEL	TELEPHONE
EQ	EQUAL, EQUALLY	TEMP	TEMPORARY
EQUIP	EQUIPMENT	TG	TOP OF GRADE
		T&G	TONGUE AND GROOVE
		TP	TOP OF PAVEMENT
FG	FINISHED GRADE	TW	TOP OF WALL
FH	FIRE HYDRANT	TYP	TYPICAL
FFE	FINISHED FLOOR ELEVATION		
FL	FLOW LINE	UON	UNLESS OTHERWISE NOTED
FS	FINISHED SURFACE	UPRR	UNION PACIFIC RAILROAD
FT	FEET OR FOOT		
		V	VALVE
GA	GAUGE	VB	VALVE BOX
GALV	GALVANIZED	VERT	VERTICAL
GV	GATE VALVE	VIF	VERIFY IN FIELD
GW	GUY WIRE	VOL	VOLUME
HB	HOSE BIBB	W	WEST OR WIDE
HORIZ	HORIZONTAL	W/	WITH
HP	HIGH POINT	WD	WOOD
HT	HEIGHT	WH	WEEP HOLE
		WI	WROUGHT IRON
ID	INSIDE DIAMETER	WM	WATER METER
INV	INVERT	WP	WATERPROOF(ING)
IRR	IRRIGATION	WT	WEIGHT
		WWF	WOVEN WIRE FABRIC
JT	JOINT	WWM	WELDED WIRE MESH
L	LONG OR LENGTH		
LBS	POUNDS		
LOW	LIMIT OF WORK		
LT	LIGHT		
MAX	MAXIMUM		
MECH	MECHANICAL		
MFR	MANUFACTURER		
MH	MANHOLE		
MIN	MINIMUM		
MISC	MISCELLANEOUS		

NOTE:

SOME ABBREVIATIONS ON THE DRAWINGS MAY NOT HAVE PERIODS AS PART OF THE ABBREVIATION. DELETION OF PERIOD SHALL NOT ALTER MEANING.

PLANTING LEGEND

SYMBOL	ABBREVIATION	BOTANICAL NAME	COMMON NAME	SIZE	SPACING	SETBACK	WATER NEEDS
		EXISTING TREE					
	PLA RAC	PLATANUS RACEMOSA	CALIFORNIA SYCAMORE	24 " BOX	SEE PLAN	20'	M
	CED DEO	CEDRUS DEODARA	DEODAR CEDAR	24 " BOX	SEE PLAN	20'	M/L
	ELA DEC	ELAEOCARPUS DECIPIENS 'MONPROUD'	JAPANESE BLUEBERRY-LITTLE EMPEROR	5 GAL	6' O.C.	6'	M

QUANTITY → 8 KNI ← GENUS

CONTAINER SIZE → 5 GAL UVA ← SPECIES

WATER REQUIREMENTS BASED ON WULCOLS (WATER USE CLASSIFICATION OF LANDSCAPE SPECIES): H-HIGH, M-MODERATE, L-LOW, VL-VERY LOW

WATER EFFICIENT WORK SHEET

PROJECT NAME: Eaton Spreading Ground Expansion
PROJECT LOCATION: Pasadena, CA
TOTAL LANDSCAPE AREA: 4,830 sq.ft.

Maxium Applied Water Allowance (MAWA)

MAWA = (ETo) (0.62) [(0.7 x LA) + (0.3 x SLA)]

52.3	ETo (reference Evapotranspiration from Appendix A (inches per year)
4,830	Landscape Area including Special Landscape Area/SLA (square feet)
0	Portion of Landscape Area identified as Special Landscape Area (square feet)

	ETo		*ETAF*		*AREA (s,f,)*		*Conversion*		*MAWA*
MAWA for LA	52.3	x	0.7	x	4,830	x	0.62	=	109,632
*MAWA for SLA**	52.3	x	0.3	x	0	x	0.62	=	0
Total MAWA									**109,632** *(gallons per year)*

Estimated Total Water Use (ETWU)

ETWU = (ETo) (0.62) [(PF x HA) / IE + SLA)]

ETWU arrived from Hydrozone Table below= **107,988** gallons per year

HYDROZONE TABLE

hydrozone	*plant water use type*	*plant factor (PF) (see table B)*	*hydrozone area (HA) (square ft.)*	*PFxHA (square ft.)*	% of landscape area (LA)	*irrigation efficiency IE*	*Hydro-zone ETWU*
1	cool/turf	0.8	0	0	0%	0.71	0
2	warm/turf	0.6	0	0	0%	0.71	0
3	high water	0.8	0	0	0%	0.71	0
4	mod.water	0.5	4,614	2,307	96%	0.71	105,362
5	low water	0.3	216	65	4%	0.80	2,627
6	low water	0.2	0	0	0%	0.90	0
7	very low	0.1	0	0	0%	0.90	0
						Subtotal ETWU	107,988
8	SLA	--		--	0%	--	0
		TOTAL	4,830		100%		107,988

IRRIGATION SPRINKLER LEGEND

SYMBOL	DESCRIPTION	MANUFACTURER	MODEL	NOZZLE	RADIUS	GPM	PSI	PATTERN	DETAIL
	12" POP-UP SPRAY HEAD	RAINBIRD OR APPROVED EQUAL	1812-SAM-PRS	SQ HLF	4'	0.2	30	HALF	
	12" POP-UP SPRAY HEAD	RAINBIRD OR APPROVED EQUAL	1812-SAM-PRS	SQ QTR	4'	0.12	30	QUARTER	
	ROOT WATERING SYSTEM	RAINBIRD OR APPROVED EQUAL	RWS-M-B-1402			0.5	30		

IRRIGATION EQUIPMENT LEGEND

SYMBOL	DESCRIPTION	MANUFACTURER	MODEL/TYPE	SIZE	DETAIL
	REMOTE CONTROL VALVE WTH SOLAR ACTUATOR SOLENOID MANUFACTURED BY DIG	RAINBIRD OR APPROVED EQUAL	PEB-PRS-D W/ LEMA 1600HE-30-921 BY DIG	SEE PLAN	E/LS-4.1
	QUICK COUPLER	RAINBIRD OR APPROVED EQUAL	33-DLC	3/4"	D/LS-4.1
	REDUCED PRESSURE BACKFLOW ASSEMBLY W/ENCLOSURE	FEBCO OR APPROVED EQUAL	825Y	3/4"	C/LS-4.1
	GATE VALVE	NIBCO OR APPROVED EQUAL	T-113-K	LINE SIZE	A/LS-4.1
M	EXISTING WATER METER			SEE PLAN	
C	SOLAR POWERED CONTROLLER WITH MOUNTING COLUMN AND ENCLOSURE	LEIT OR APPROVED EQUAL	LEIT 4004 (4 STATIONS), MCOLXL (51" COLUMN), ENCL 4000 ENCLOSURE	SEE PLAN	F/LS-4.1
R	RAIN SENSOR AND ENCLOSURE (SG-MC)	HUNTER OR APPROVED EQUAL	MINI CLIK RAIN SENSOR WITH SKIT 8821-4 BY DIG	SEE PLAN	L/LS-4.1
	LATERAL LINE (PVC)		SCH 40	SEE PLAN	J/LS-4.1
	LATERAL LINE (SCH 40 GALVANIZED)		SCH 40	SEE PLAN	H/LS-4.1
	MAIN LINE (PVC)		SCH 40	SEE PLAN	J/LS-4.1
	MAIN LINE (SCH 40 GALVANIZED)		SCH 40	SEE PLAN	H/LS-4.1
	PIPE SLEEVE FOR CONTROLLER WIRES		SEE SLEEVING CHART		J/LS-4.1
	PIPE SLEEVE		SEE SLEEVING CHART		J/LS-4.1

SLEEVING CHART

SLEEVE SIZE	PVC CLASS	PIPE SIZE	WIRES
1.25"	SCH 40	0.5"	1 - 4
1.5"	SCH 40	0.75"	5 - 10
2"	CLASS 315	1"	11 - 20
2.5"	CLASS 315	1.25"	21 - 30

VALVE SYMBOL

16 | 3 | 1 1/4"

- 3 → STATION NUMBER
- 1 1/4" → VALVE SIZE
- 16 → GPM

UNDERGROUND UTILITY SYMBOLS

- E — ELECTRICAL
- G — GAS LINE
- C — COMMUNICATIONS
- TV — CABLE TV
- W — POTABLE WATER
- RW — RECLAIMED WATER
- S — SEWER
- SD — STORM WATER

SYMBOLS

- MANHOLE COVER
- ROAD SIGN - SINGLE POST
- ROAD SIGN - DOUBLE POST
- UTILITY POLE
- POWER POLE
- PULL BOX
- WATER METER
- GUY WIRE
- FIRE HYDRANT
- STREET LIGHT
- TRAFFIC SIGNAL
- GUARD RAIL
- SURVEY CONTROL
- EXISTING WALL
- EXISTING FENCE
- PROPOSED FENCE
- RW — RIGHT OF WAY (COUNTY)
- ROAD CENTERLINE

DATE	MK	DESCRIPTION

REVISIONS

REGISTERED LANDSCAPE ARCHITECT — RICHARD SHIEM — NO. 3568 — EXP. 7/31/2013 — STATE OF CALIFORNIA

8/14/12
PROJECT LANDSCAPE ARCHITECT DATE

COUNTY OF LOS ANGELES DEPARTMENT OF PUBLIC WORKS

EATON WASH

SPREADING GROUNDS BASIN ENLARGEMENT

LEGENDS

LS-1.2

DATE: 6/14/2012 | PCA EF02511126 | FCC0001211 | SHEET 9 OF 13

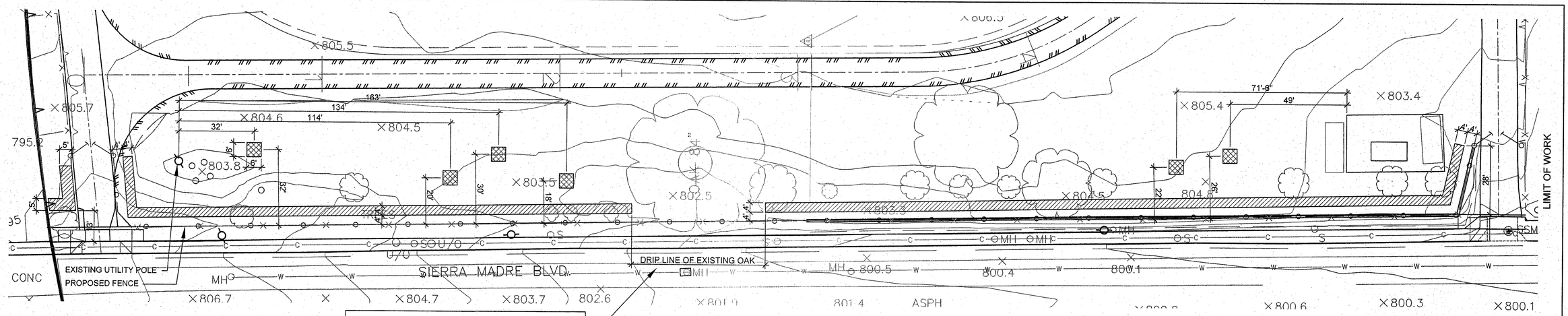

DO NOT DISTURB THE SOIL UNDER THE DRIP LINE OF THE EXISTING OAK TREE. ANY VISIBLE, EXISTING, ABANDONED IRRIGATION EQUIPMENT SHALL BE CAPPED OR REMOVED AT THE DISCRETION OF ENGINEER.

REMOVAL PLAN

SOIL REMOVAL LEGEND

REMOVE EXISTING SOIL TO 12" DEPTH

REMOVE EXISTING SOIL TO 24" DEPTH

UNDER THE DRIP LINE OF THE EXISTING OAK TREE, IRRIGATION LATERAL AND MAIN LINE PIPES SHALL BE SCH 40 GALV. STEEL INSTALLED AT GRADE. SEE DETAIL H, SHT. LS-4.1

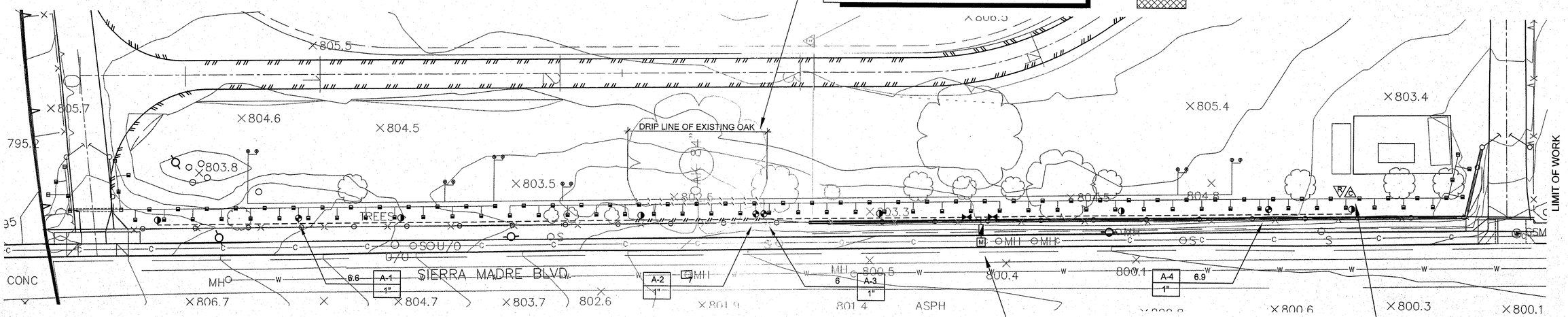

IRRIGATION PLAN

IRRIGATION NOTES:

1. SEE SHEET LS-1.2 FOR IRRIGATION LEGEND AND SHEET LS-1.1 FOR IRRIGATION INSTALLATION NOTES.
2. SEE SHEET LS-4.1 FOR IRRIGATION DETAILS.
3. SEE SHEET LS-1.1 FOR GENERAL CONSTRUCTION/REMOVAL NOTES.
4. WORK SHOWN ON THE IRRIGATION PLANS IS DIAGRAMMATIC. LOCATE NEW IRRIGATION LINES, VALVES AND EQUIPMENT IN PLANTING AREAS. AVOID LOCATING LINES WHERE MAJOR TREES ARE PROPOSED.
5. CONTRACTOR SHALL VERIFY THE EXISTING WATER PRESSURE AT THE PROPOSED POINT OF CONNECTION PRIOR TO INSTALLATION OF SYSTEM. WATER SERVICE AND WATER PRESSURE INFORMATION ARE AVAILABLE THROUGH THE WATER PURVEYOR, CITY OF PASADENA WATER AND POWER DEPARTMENT: ADOLFO VARGAS AT (626) 744-4331.
6. P.O.C. FOR THE WATER TO BE DOWNSTREAM OF THE WATER METER. AVAILABLE WATER PRESSURE VARIES FROM 90 TO 100 PSI.
7. CONTRACTOR SHALL REMOVE ALL VISIBLE, ABANDONED IRRIGATION LINES ALONG THE CHAIN LINK FENCE ON SIERRA MADRE BLVD.

WATER DEMAND:
TOTAL LANDSCAPE / IRRIGATED AREA: 4830 SF
MAXIMUM DEMAND: 7 GPM
ESTIMATED ANNUAL WATER USAGE: 62010 GALLONS / YEAR

WATER POC:
EXISTING 2" WATER METER AND SHUTOFF VALVE. LOCATE REDUCED PRESSURE BACKFLOW PREVENTION DEVICE WITH ENCLOSURE WITHIN COUNTY'S RIGHT OF WAY. FINAL LOCATION SHALL BE DETERMINED IN FIELD BY BOTH ENGINEER AND REPRESENTATIVE FROM PASADENA WATER AND POWER. AVAILABLE WATER PRESSURE IS 90 PSI. WATER PURVEYOR: PASADENA WATER AND POWER, (626) 744-4331 ATTN: ADOLFO VARGAS

EXACT LOCATION OF CONTROLLER AND RAIN SENSOR SHALL BE DETERMINED IN FIELD BY ENGINEER.

NORTH

0 10' 20' 40' 60'
SCALE: 1"=20'

DATE	MK	DESCRIPTION

REVISIONS

REGISTERED LANDSCAPE ARCHITECT
RICHARD SHIEH
NO. 3568
EXP. 7/31/2013
STATE OF CALIFORNIA

PROJECT LANDSCAPE ARCHITECT — DATE 6/14/12

COUNTY OF LOS ANGELES DEPARTMENT OF PUBLIC WORKS

EATON WASH

SPREADING GROUNDS BASIN ENLARGEMENT

REMOVAL / IRRIGATION PLAN — LS-2.1

DATE: 6/14/2012 | PCA EF02511126 | FCC0001211 | SHEET 10 OF 13

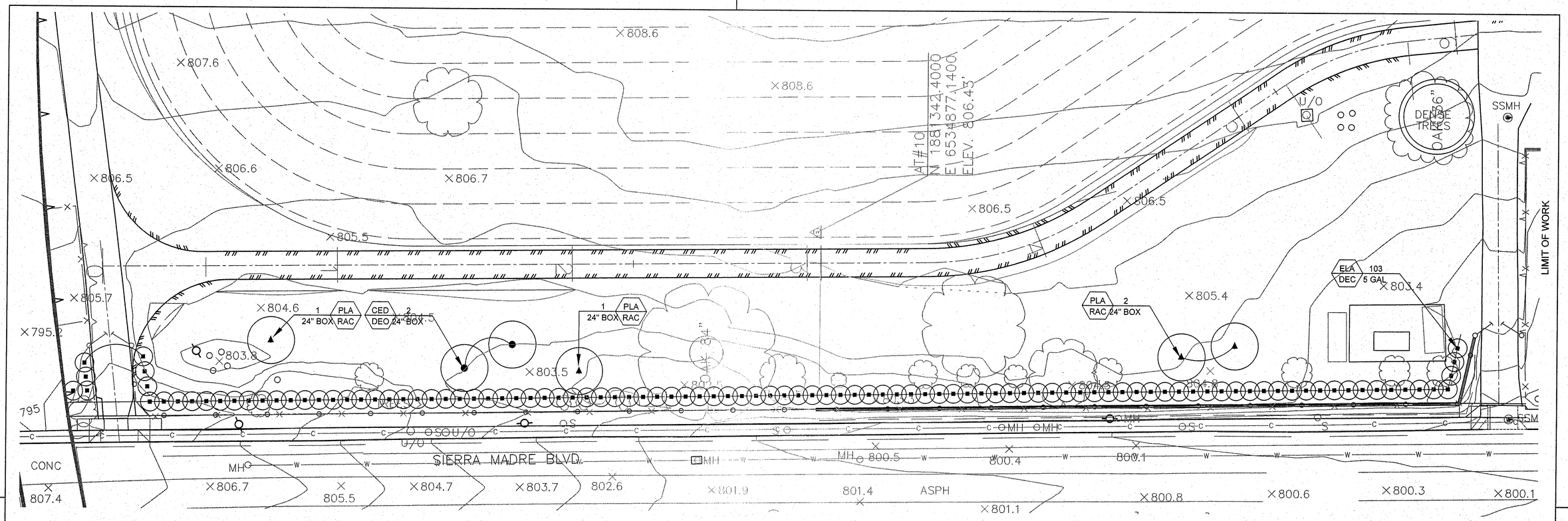

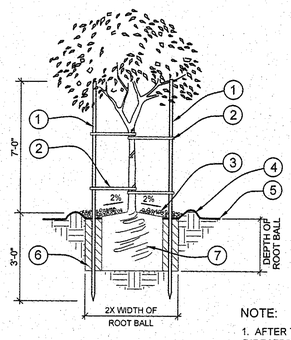

LEGEND:

1. (2) TWO 10'-0" X 2" DIA. PRESSURE TREATED LODGEPOLE TREE STAKES (REFER TO SPECIAL PROVISIONS).
2. FASTEN TREE TO STAKES W/ "WONDER TREE TIES" OR APPROVED EQUAL. TWO (2) AT EACH STAKE.
3. BACKFILL WATER BASIN W/ 3" OF UNCOMPACTED MULCH. KEEP MULCH AWAY FROM CROWN.
4. FORM 3" HIGH BERM AROUND BASIN. (3' DIA. FOR 15 GAL TREE, 4' DIA FOR 24" BOX TREE, AND 6' FOR 36" BOX TREE) DO NOT FORM BERM IF PLANTED IN LAWN
5. FINISH GRADE
6. BACKFILL MIX. REFER TO SPECIAL PROVISIONS.
7. ROOT BALL. SET TOP OF ROOT BALL 1" ABOVE FINISH GRADE

NOTE:

1. AFTER TREE IS PLANTED, PRUNE AND SHAPE AS DIRECTED AND APPROVED BY LANDSCAPE ARCHITECT.

TREE PLANTING/STAKING

PLANTING LEGEND

SYMBOL	ABBREVIATION	BOTANICAL NAME	COMMON NAME	SIZE	SPACING	SETBACK	WATER NEEDS
		EXISTING TREE					
	PLA RAC	PLATANUS RACEMOSA	CALIFORNIA SYCAMORE	24 " BOX	SEE PLAN	20'	M
	CED DEO	CEDRUS DEODARA	DEODAR CEDAR	24 " BOX	SEE PLAN	20'	M/L
	ELA DEC	ELAEOCARPUS DECIPIENS 'MONPROUD'	JAPANESE BLUEBERRY-LITTLE EMPEROR	5 GAL	6' O.C.	6'	M

QUANTITY → 8 — KNI ← GENUS

CONTAINER SIZE → 5 GAL — UVA ← SPECIES

WATER REQUIREMENTS BASED ON WULCOLS (WATER USE CLASSIFICATION OF LANDSCAPE SPECIES): H-HIGH, M-MODERATE, L-LOW, VL-VERY LOW

NOTES:

1. SEE SHEET LS-1.1 FOR PLANTING NOTES.

NORTH

0 10' 20' 40' 60'

SCALE: 1"=20'

DATE	MK	DESCRIPTION

REVISIONS

REGISTERED LANDSCAPE ARCHITECT
RICHARD SHIEH
NO. 3568
EXP. 7/31/2013
STATE OF CALIFORNIA

PROJECT LANDSCAPE ARCHITECT — DATE 6/14/12

COUNTY OF LOS ANGELES DEPARTMENT OF PUBLIC WORKS

EATON WASH

SPREADING GROUNDS BASIN ENLARGEMENT

PLANTING PLAN

LS-3.1

DATE: 6/14/2012 | PCA EF02511126 | FCC0001211 | SHEET 11 OF 13

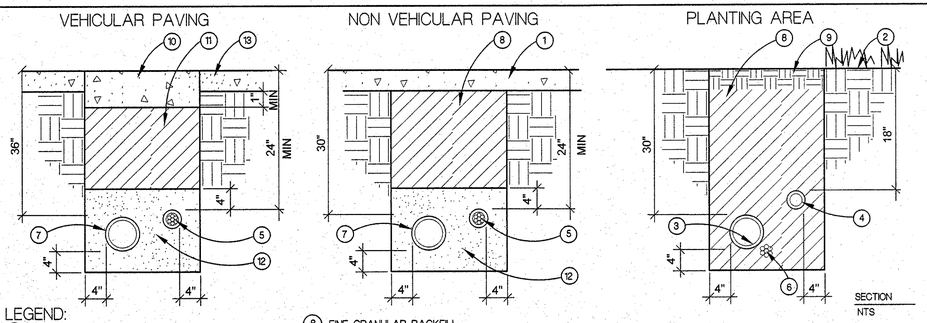

LEGEND:

1. PAVING
2. FINISH GRADE
3. PVC MAINLINE
4. PVC LATERAL LINE
5. CONTROL WIRES OR COM. CABLE IN CONDUIT
6. CONTROL WIRES OR COM. CABLE
7. SLEEVE FOR MAINLINE AND/OR LATERAL LINE
8. FINE GRANULAR BACKFILL
9. TOPSOIL
10. AC PAVEMENT (PG 64-10) OR PCC (560-C-3250) THICKNESS TO MATCH EXISTING PAVEMENT PLUS 1". MINIMUM THICKNESS SHALL BE 4".
11. TRENCH BACKFILL SLURRY (270-E-500)
12. WASHED SAND
13. EXISTING AC OR PCC PAVEMENT

NOTES:

1. TAPE AND BUNDLE 24V. WIRES TO MAINLINE @ 10' INTERVALS.
2. MINIMUM DEPTH OF 24V. WRING SHALL BE 24" BELOW GRADE.
3. TRENCH WIDTH ALLOW 4" MIN. CLEARANCE BETWEEN PARALLEL PIPES.
4. SNAKE PIPES FROM SIDE TO SIDE WITHIN TRENCH TO ALLOW FOR MOVEMENT.
5. TIE A 20" LOOP IN ALL WRING AT CHANGES OF DIRECTION. UNTIE PRIOR TO BACKFILLING TRENCHES.

(J) PIPE TRENCHING — NTS

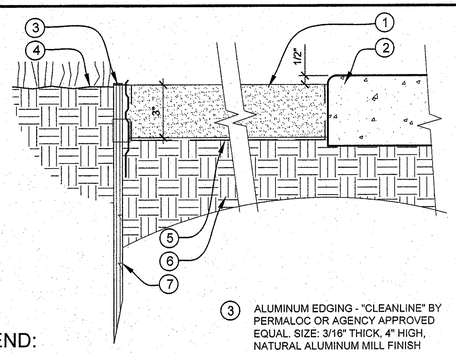

LEGEND:

1. 3" DEEP DECOMPOSED GRANITE WITH BINDER (COLOR: DESERT GOLD) INSTALLED IN 2, 1-1/2" LIFTS. FINISH GRADE SHALL BE 1/2" BELOW ADJACENT PAVEMENT OR SURFACE. D.G. BINDER TO BE MARLOC-SS OR AGENCY APPROVED EQUAL.
2. EXISTING OR PROPOSED SIDEWALK
3. ALUMINUM EDGING - "CLEANLINE" BY PERMALOC OR AGENCY APPROVED EQUAL. SIZE: 3/16" THICK, 4" HIGH, NATURAL ALUMINUM MILL FINISH
4. FINISH GRADE
5. POLYTHYLENE WEED BARRIER
6. SUBGRADE COMPACTED TO 90%
7. 18" ALUMINUM STAKE, INSTALL PER MANUFACTURER'S DIRECTION

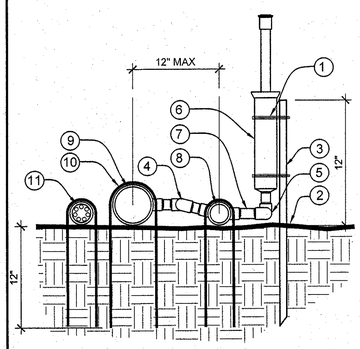

LEGEND:

1. STAINLESS STEEL HOSE CLAMP (2)
2. FINISHED GRADE
3. 24" LONG #4 REBAR STAKE OR 1" X 1" ANGLE STEEL
4. GALV. STEEL SCH. 80 ELL
5. GALV. STEEL SCH. 80 RISER ASSEMBLY
6. POP-UP SPRINKLER HEAD
7. GALV. STEEL SCH. 80 NIPPLE - LENGTH AS REQUIRED
8. GALV. STEEL SCH. 40 ON GRADE LATERAL LINE
9. GALV. STEEL SCH. 40 ON GRADE MAINLINE
10. #3 REBAR PIN AT 48" O.C.
11. GALV. STEEL SCH. 40 ON GRADE CONTROL WIRE CONDUIT

(K) DECOMPOSED GRANITE PAVING — S: 3"=1'-0"

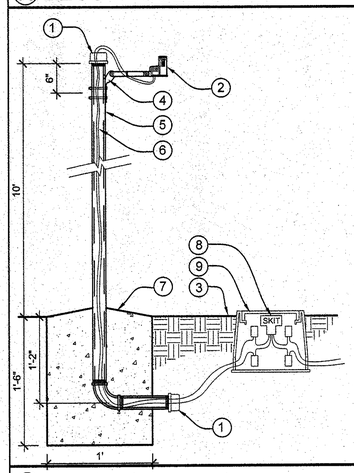

LEGEND:

1. PLASTIC CAP WITH HOLES FOR WIRES - DIG CORP. PART NO. 23-053
2. RAIN SENSOR: RAIN-CLIK BY HUNTER OR AGENCY APPROVED EQUAL
3. FINISH GRADE
4. MOUNT SUPPORT BRACKET TO POST WITH TWO 1/4" X 3" GALV. BOLTS
5. 1-1/2" DIA. SCH 40 GALV. STEEL PIPE
6. WIRES TO CONTROLLER
7. CONCRETE FOOTING, SLOPE TOP OF FOOTING 1" ABOVE FINISH GRADE
8. SKIT ADAPTER PART NO. 8821-4 BY DIG CORPORATION OR AGENCY APPROVED EQUAL
9. 9" DIA. CONCRETE VALVE BOX WITH CONCRETE LID

NOTES:

WIRING DIAGRAM PER MANUFACTURER'S DIRECTION

(L) RAIN SENSOR — NTS

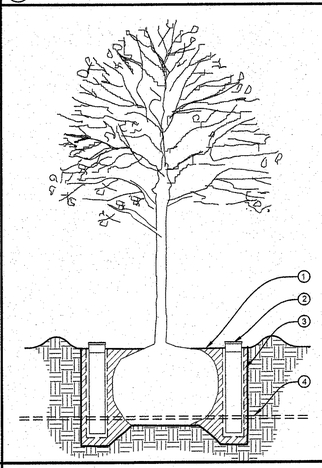

LEGEND:

1. FINISH GRADE
2. ROOT WATERING SYSTEM. RWS-M-BCG FOR 15 GAL TO 24" BOX TREE. USE RWS-BCG FOR 36" BOX OR LARGER TREE
3. OPTIONAL LANDSCAPE FABRIC FOR SANDY SOILS
4. LATERAL LINE

NOTES:

1. USE 2 UNITS PER TREE
2. POSITION UNITS EVENLY SPACED AROUND ROOT BALL
3. SET TOP OF CAP 3" ABOVE FINISH GRADE
4. USE PURPLE CAP FOR NON-POTABLE WATER

(I) TREE BUBBLER — NTS

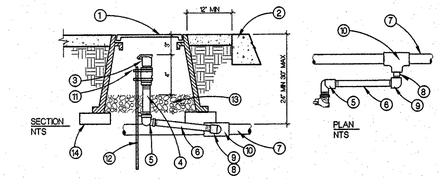

LEGEND:

1. CONCRETE VALVE BOX LID TO BE HINGED & LOCKABLE
2. CURB, WALK OR OTHER HARDSCAPE FEATURE
3. QUICK COUPLING VALVE 33-DRC WITH LOCKING CAP
4. SCHEDULE 80 PVC; LENGTH AS REQUIRED
5. SCHEDULE 40 PVC STREET ELBOW
6. SCHEDULE 80 PVC NIPPLE-6" MIN, 12" MAX LENGTH
7. PVC MAINLINE
8. PVC SCHEDULE 80 THREADED ONE END NIPPLE - 2" LENGTH
9. SCHEDULE 40 PVC THREADED ELBOW
10. PVC SCHEDULE 40 SLIP TEE
11. STAINLESS STEEL COMPRESSION CLAMP (2 REQUIRED).
12. 24" MINIMUM LENGTH #4 REBAR STAKE. SECURE AT BODY ONLY
13. 3/4" CRUSHED ROCK - 8" DEEP
14. COMMON BRICK, ONE AT EACH CORNER (4 REQUIRED) TYP.

NOTES:

1. VALVE BOX TO BE SET SQUARE AND FLUSH NEXT TO CURB OR SIDEWALK.
2. FOR NON-HARDSCAPE AREAS, SET TOP OF VALVE BOX 2" ABOVE FINISH GRADE.

(D) QUICK COUPLER VALVE — NTS

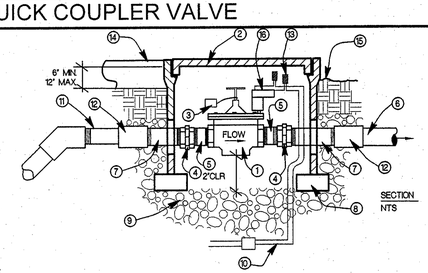

LEGEND:

1. ELECTRIC CONTROL VALVE
2. CONCRETE VALVE BOX LID TO BE HINGED AND LOCKABLE
3. IDENTIFICATION TAG PER SPECIAL PROVISIONS. NUMBER TO MATCH DRAWINGS
4. UNION (TYP.)
5. PVC SCHEDULE 80 NIPPLE (THREADED TWO END)
6. PVC PIPE
7. 6" BRASS THREAD NIPPLE
8. COMMON RED BRICK, ONE AT EACH CORNER (4 REQUIRED) TYP.
9. 3/4" CRUSHED ROCK - 8" DEEP AND 2" CLEAR FROM BOTTOM OF VALVE
10. COMMON WIRES FROM CONTROLLER
11. PVC MAINLINE
12. PVC FEMALE ADAPTER
13. WIRE CONNECTORS
14. ADJACENT FINISH SURFACE OF PAVEMENT. TOP OF BOX TO BE FLUSH W/ PAVEMENT
15. ADJACENT FINISH GRADE (TOP OF BOX TO BE 1" ABOVE GRADE FOR LAWN, 2" ABOVE GRADE FOR GROUND COVER/SHRUB AREA)
16. ACTUATOR (SEE IRRIGATION LEGEND)

NOTES:

1. WHEN VALVE BOXES ARE CLUSTERED, PROVIDE 1' MIN. CLEARANCE BETWEEN BOXES.
2. PROVIDE VALVE WITH SEPARATE CONNECTION TO MAINLINE INSTALL NO MULTIPLE ASSEMBLIES.
3. INSTALL VALVE BOX WITH HINGED COVER "OPENING TOWARD DOWNSTREAM OF VALVE IN ORDER TO PROVIDE ACCESS TO FLOW CONTROL FEATURE OF CONTROL VALVE.
4. ALL VERTICAL CHANGES IN MAINLINE PIPE DIRECTION SHALL BE DONE WITH THE USE OF 45 DEGREE ELBOWS.
5. INSTALL GALVANIZED WOVEN MESH (1/4" SIEVE SIZE) BETWEEN ROV BOX AND CRUSHED ROCK. WRAP FABRIC UP SIDE OF BOX (3" MIN).

(E) REMOTE CONTROL VALVE — NTS

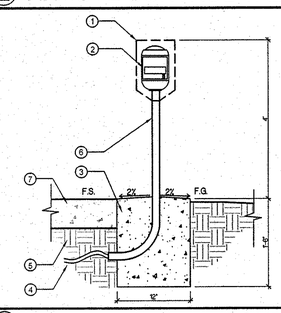

LEGEND:

1. STAINLESS STEEL ENCLOSURE BY DIG INDUSTRIES (OR AGENCY APPROVED EQUAL) INSTALL PER MANUFACTURER'S RECOMMENDATIONS. SEE IRRIGATION LEGEND FOR MODEL NUMBER.
2. LEIT SOLAR POWERED AUTOMATIC IRRIGATION CONTROLLER MOUNTED ON MOUNTING COLUMN BY D.I.G. IRRIGATION PRODUCTS. INSTALL PER MANUFACTURER'S RECOMMENDATIONS. SEE IRRIGATION LEGEND FOR MODEL NUMBER.
3. 12"X12"X18" DEEP CAST IN PLACE CONCRETE FOOTING. SET TOP OF FOOTING 2" ABOVE FINISH GRADE IN PLANTING AREA, OR FLUSH WITH FINISH SURFACE IN WALKWAYS.
4. WIRES TO REMOTE CONTROL VALVES. WIRES TO BE 14 AWG (MIN.) NO FIELD SPLICES.
5. 90% RELATIVE COMPACTED SUBGRADE.
6. MOUNTING COLUMN BY D.I.G. IRRIGATION PRODUCTS. INSTALL PER MANUFACTURER'S RECOMMENDATIONS. SEE IRRIGATION LEGEND FOR MODEL NUMBER.
7. CONCRETE / ASPHALT PAVING

(F) SOLAR POWERED CONTROLLER — NTS

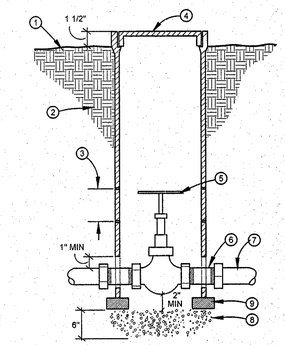

LEGEND:

1. FINISH GRADE
2. COMPACTED SUBGRADE
3. BREAK-OFF GROVES 3 PLACES - 4" TYP.
4. CONCRETE VALVE BOX. SEE SPECIFICATIONS.
5. GATE VALVE W/ HANDWHEEL LINE SIZE
6. SCH. 80 P.V.C. NIPPLES, TYP.
7. PRESSURE MAINLINE
8. 3/4" CRUSHED ROCK 8" DEPTH
9. COMMMON RED BRICK, ONE AT EACH CORNER (4 REQUIRED)

NOTES:

FOR 2 1/2" LARGER GATE VALVE, USE CAST IRON FLANGE ADAPTOR BETWEEN G.V. & P.V.C. SUPPLY.

(A) GATE VALVE — NTS

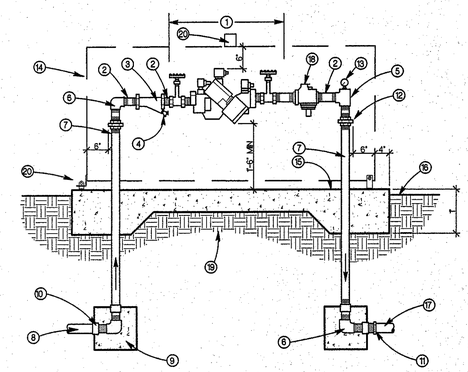

LEGEND:

1. REDUCED PRESSURE BACKFLOW PREVENTER ASSEMBLY
2. BRASS NIPPLE- 3-INCH MINIMUM, 4-INCH MAXIMUM LENGTH (TYP)
3. BRONZE WYE STRAINER WITH 60 MESH MONEL SCREEN
4. BRASS HOSE BIB WITH THREADED HOSE BIB VACUUM BREAKER
5. BRASS TEE - LINE SIZE
6. BRASS 90 DEGREE ELBOW (TYP).
7. BRASS RISER/ NIPPLE (TYP) - WRAP ALL PIPE BELOW SOIL/CONCRETE LINE WITH 10 MIL PVC TAPE
8. MAINLINE FROM POINT OF CONNECTION - ADAPT AS REQUIRED
9. 12"X12"X12" CONCRETE THRUST BLOCK (TYPICAL)
10. BRASS COUPLING - SET FLUSH WITH CONCRETE (TYPICAL)
11. PVC MALE ADAPTER
12. BRASS UNION - LINE SIZE
13. WATERPROOF PRESSURE GAUGE (0-200 PSI) ON 1/4" NPT THREADED SP REDUCING BUSHING - ADAPT AS REQUIRED
14. BACKFLOW DEVICE ENCLOSURE. INSTALL PER MANUF. RECOMMENDATIONS
15. 6" THICK CONCRETE PAD SLOPED TO DRAIN. EXTEND BASE 4" BEYOND ALL FOUR SIDES OF ENCLOSURE. SET TOP OF PAD 2" ABOVE FINISH GRADE
16. FINISH GRADE
17. PVC MAINLINE
18. PRESSURE REGULATOR - IF NECESSARY (SEE PLAN)
19. COMPACTED SUB GRADE
20. ENCLOSURE LOCK FOR SINGLE (SIDE) OR DUAL (TOP) OPENING

NOTES:

1. ENGINEER TO APPROVE FINAL LOCATION OF BACKFLOW PREVENTER AND ENCLOSURE PRIOR TO INSTALLATION.
2. FINAL ASSEMBLY AND FITTING OF BACKFLOW PREVENTER WITHIN THE ENCLOSURE IS THE RESPONSIBILITY OF CONTRACTOR.

(C) BACKFLOW PREVENTER ASSEMBLY — NTS

DATE	MK	DESCRIPTION

REVISIONS

REGISTERED LANDSCAPE ARCHITECT — RICHARD SHIEH — NO. 3568 — EXP. 7/31/2013 — STATE OF CALIFORNIA

PROJECT LANDSCAPE ARCHITECT — DATE 6/14/12

COUNTY OF LOS ANGELES DEPARTMENT OF PUBLIC WORKS

EATON WASH

SPREADING GROUNDS BASIN ENLARGEMENT

DETAILS — LS-4.1

DATE: 6/14/2012	PCA EF02511126	FCC0001211	SHEET 12 OF 13

SUMMARY LOG OF BORING B1

Geotechnical and Materials Engineering Division - Los Angeles County Department of Public Works

PROJECT Eaton Wash Spreading Grounds Basin Enlarg. CLIENT Design Division PAGE 1 OF 1
PROJECT ID FCC0001211 DRILLER LACDPW LOGGED BY Erick Del Bosque TOTAL DEPTH 16.5'
TYPE/DIAMETER OF BORING 6.5" outside-diameter hollow stem auger ELEVATION N/A
DATE(S) 1/9/12 MONITORING WELL INSTALLED? No HAMMER WEIGHT (LBS.) 140 DROP HEIGHT (IN.) 30
LOCATION N34° 9' 42.5", W118° 5' 16.9"

Note: This log contains observations and interpretations that are valid only for the specific date and location of the boring. Subsurface conditions vary between borings and with time. Material descriptions are derived using visual classification methods and may vary from descriptions/classifications based on laboratory testing.

LABORATORY TESTING: In-situ γ_d (pcf)	In-situ MC (%)	Sieve % Passing No. 4	Sieve % Passing No. 200	DEPTH (feet)	Graphic Log	FIELD DATA: Sample No.	Blow Count (per 6"or 1foot)	Sample Time Units Comments PID - PPM	USCS	LITHOLOGIC DESCRIPTION
				0–4		1B		maximum density and corrosion tests	SP	Poorly Graded Sand with Gravel, medium dense, brown, dry, some cobbles on surface, medium grained sand, fine to coarse gravel
122.3	3.6			5		2R	6 15 19	density, shear, and sand equivalency tests		@ 5', No cobbles
112.6	8.7	88.2	17.6	10–11		3R	7 8 16	density and sieve analysis tests	SM	Silty Sand, medium dense, brown, moist, some fine to coarse gravel @ 12', Gravel content increases
				15–16			10 8 18	no recovery		

SUMMARY LOG OF BORING T1

Geotechnical and Materials Engineering Division - Los Angeles County Department of Public Works

PROJECT Eaton Wash Spreading Grounds Basin Enlarg. CLIENT Design Division PAGE 1 OF 1
PROJECT ID FCC0001211 DRILLER LACDPW LOGGED BY Erick Del Bosque TOTAL DEPTH 6.5'
TYPE/DIAMETER OF BORING 3' x 8' x 6.5' trench with backhoe ELEVATION N/A
DATE(S) 1/9/12 MONITORING WELL INSTALLED? No HAMMER WEIGHT (LBS.) n/a DROP HEIGHT (IN.) n/a
LOCATION N34° 9' 50.2", W118° 5' 16.0"

Note: This log contains observations and interpretations that are valid only for the specific date and location of the boring. Subsurface conditions vary between borings and with time. Material descriptions are derived using visual classification methods and may vary from descriptions/classifications based on laboratory testing.

LABORATORY TESTING: In-situ γ_d (pcf)	In-situ MC (%)	Sieve % Passing No. 4	Sieve % Passing No. 200	DEPTH (feet)	Graphic Log	FIELD DATA: Sample No.	Blow Count (per 6"or 1foot)	Sample Time Units Comments PID - PPM	USCS	LITHOLOGIC DESCRIPTION
	62.0	4.9		0–6		1B		maximum density, corrosion, sieve analysis, and sand equivalency tests	SP	Poorly Graded Sand with Gravel and Cobbles, very loose, brown, very moist, some boulders with an approximate 1-foot diameter

SUMMARY LOG OF BORING B4

Geotechnical and Materials Engineering Division - Los Angeles County Department of Public Works

PROJECT Eaton Wash Sprdg. Grounds Improv. CLIENT DESIGN DIVISION PAGE 1 OF 1
PROJECT ID FCC0001153 DRILLER LACDPW LOGGED BY Erick Del Bosque TOTAL DEPTH 25'
TYPE/DIAMETER OF BORING Hollow Stem Rig - 6.5" outside diameter auger ELEVATION N/A
DATE(S) 9/14/09 MONITORING WELL INSTALLED? NO HAMMER WEIGHT (LBS.) 140 DROP HEIGHT (IN.) 30
LOCATION Pasadena, CA (N34° 9' 51.21"; W118° 5' 15.96")

Note: This log contains observations and interpretations that are valid only for the specific date and location of the boring. Subsurface conditions vary between borings and with time. Material descriptions are derived using visual classification methods and may vary from descriptions/classifications based on laboratory testing.

USCS	LABORATORY TESTING: In-situ γ_d (pcf)	In-situ MC (%)	Sieve % Passing No. 4	Sieve % Passing No. 200	DEPTH (feet)	Graphic Log	FIELD DATA: Sample No.	Blow Count (per 6"or 1foot)	Interpretations Attitudes Comments PID - PPM	LITHOLOGIC DESCRIPTION
					0					3" AC with ~ 5" CMB
SP-SM					1–9					Poorly Graded Sand with Silt, loose, moist, brown, trace gravel
	116.7	5.4			5–6		1R	6 7 11	SE	
					7–8		2B			
SP					10–11		3R	7 12 15		Poorly Graded Sand with Gravel, medium dense, moist, brown
	118.0	2.9			15–16		4R	7 9 7	DS	@15', Decrease to loose; @17', Gravel content increases
					21				Invert Depth	
GP					22–25					Poorly Graded Gravel with Sand, loose, moist, gray

DRAFTER	DESIGNER	CHECKER	CADD PROJECT FILE NAME	REVIEWED BY	DATE
E. DEL BOSQUE	E. DEL BOSQUE	BRIAN SMITH	FCC001211		

DATE	MK	DESCRIPTION

REVISIONS

REGISTERED PROFESSIONAL ENGINEER — BRIAN SMITH — NO. C69541 — EXP. 06-30-12 — CIVIL — STATE OF CALIFORNIA

PROJECT ENGINEER DATE

COUNTY OF LOS ANGELES DEPARTMENT OF PUBLIC WORKS

EATON WASH
SPREADING GROUNDS BASIN ENLARGEMENT

BORING LOG SHEET

FCC0001211 | JOBEF02511126 | DWG 24-D79.13 | SHEET 13 OF 13

PS-OF 5/99

COUNTY OF LOS ANGELES
DEPARTMENT OF PUBLIC WORKS

DEVIL'S GATE DAM AND RESERVOIR WATER CONSERVATION PROJECT

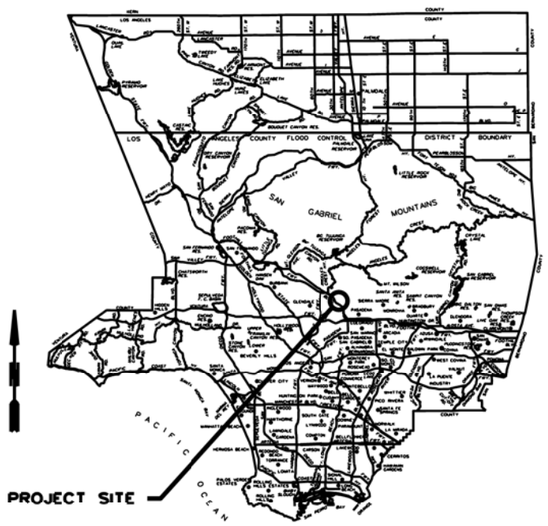

Thomas Bros. Pgs. 535 - E6
566 - E1

LOCATION MAP

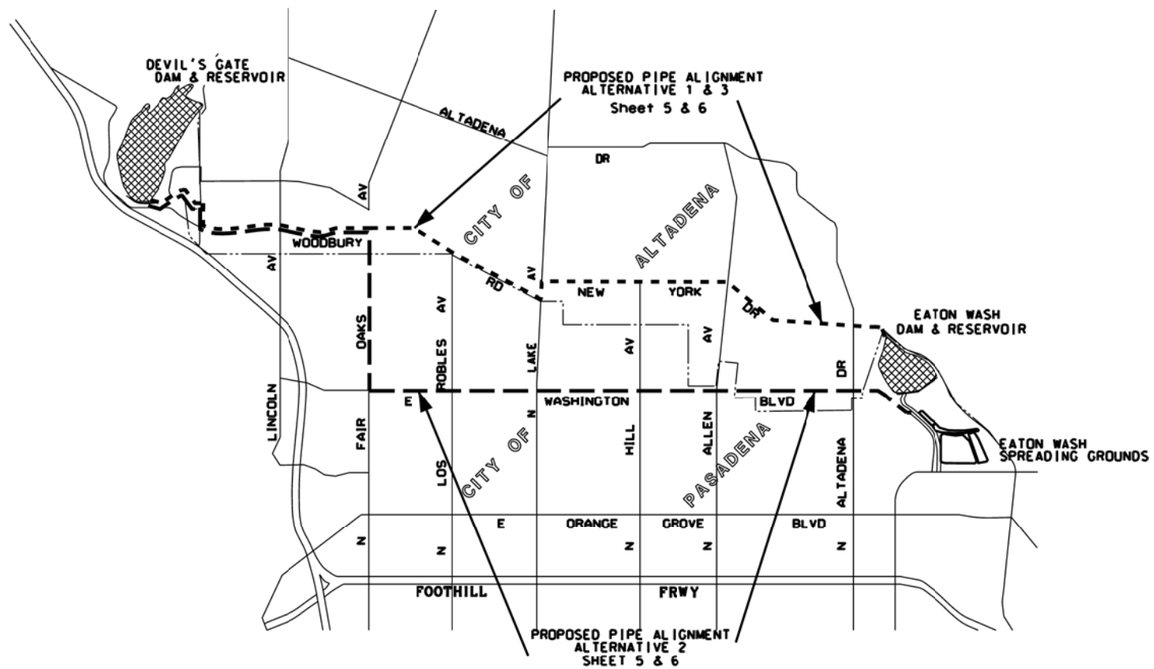

VICINITY MAP
NOT TO SCALE

INDEX TO PROJECT DRAWINGS

SH. NO.	DESCRIPTION
1	TITLE
2	PROPOSED PIPELINE ALIGNMENT PLAN
3	PUMP ALTERNATIVE A
4	PUMP ALTERNATIVE B
5	PROPOSED PIPELINE ALIGNMENT DETAILS
6	PROPOSED PIPELINE ALIGNMENT DETAILS

REFERENCES

TOPOGRAPHIC MAP NO. 65-T81 (APRIL 2010)
TOPOGRAPHIC MAP NO. 24-T63 (JULY 2008)
FAIR OAKS RELIEF DRAIN - DWG NO 939-D1
REHABILITATION OF DEVIL'S GATE DAM - DWG NO 65-D59

ALTERNATIVES INFORMATION

PUMP ALTERNATIVE	DESCRIPTION
A	PUMP LOCATED ON UPSTREAM FACE OF DEVIL'S GATE DAM
B	PUMP LOCATED IN EXISTING OUTLET TOWER

PIPELINE ALTERNATIVE	DESCRIPTION	PIPE LENGTH (FT)
1	NEW PIPELINE & EXISTING DRAIN TO EATON WASH RESERVOIR	NEW:21,000 EXISTING:5,500
2	NEW PIPELINE TO EATON SPREADING GROUNDS	NEW:31,000
3	NEW DEDICATED PIPELINE TO EATON WASH RESERVOIR	NEW:26,000

CONCEPT ONLY

TWO DAYS BEFORE YOU DIG
CALL USA TOLL FREE
1-800-227-2600

APPROVED GAIL FARBER DIRECTOR OF PUBLIC WORKS
BY _____ DEPUTY DIRECTOR _____ DATE

RECOMMENDED
BY _____ ASSISTANT DEPUTY DIRECTOR _____ DATE

SUBMITTED
BY _____ DATE

DATE	MK	DESCRIPTION

REVISIONS

REGISTERED PROFESSIONAL ENGINEER CIVIL STATE OF CALIFORNIA
PROJECT ENGINEER _____ DATE

COUNTY OF LOS ANGELES DEPARTMENT OF PUBLIC WORKS
DEVIL'S GATE DAM
RESERVOIR WATER CONSERVATION PROJECT

TITLE SHEET

JOB H0321042 | DWG | SHEET 1 OF 6

DRAFTER A. WONG | DESIGNER | CHECKER | CADD PROJECT FILE NAME

DATE: 10/27/10 TIME: 9:11AM FILE: 0FTITLE.DWG

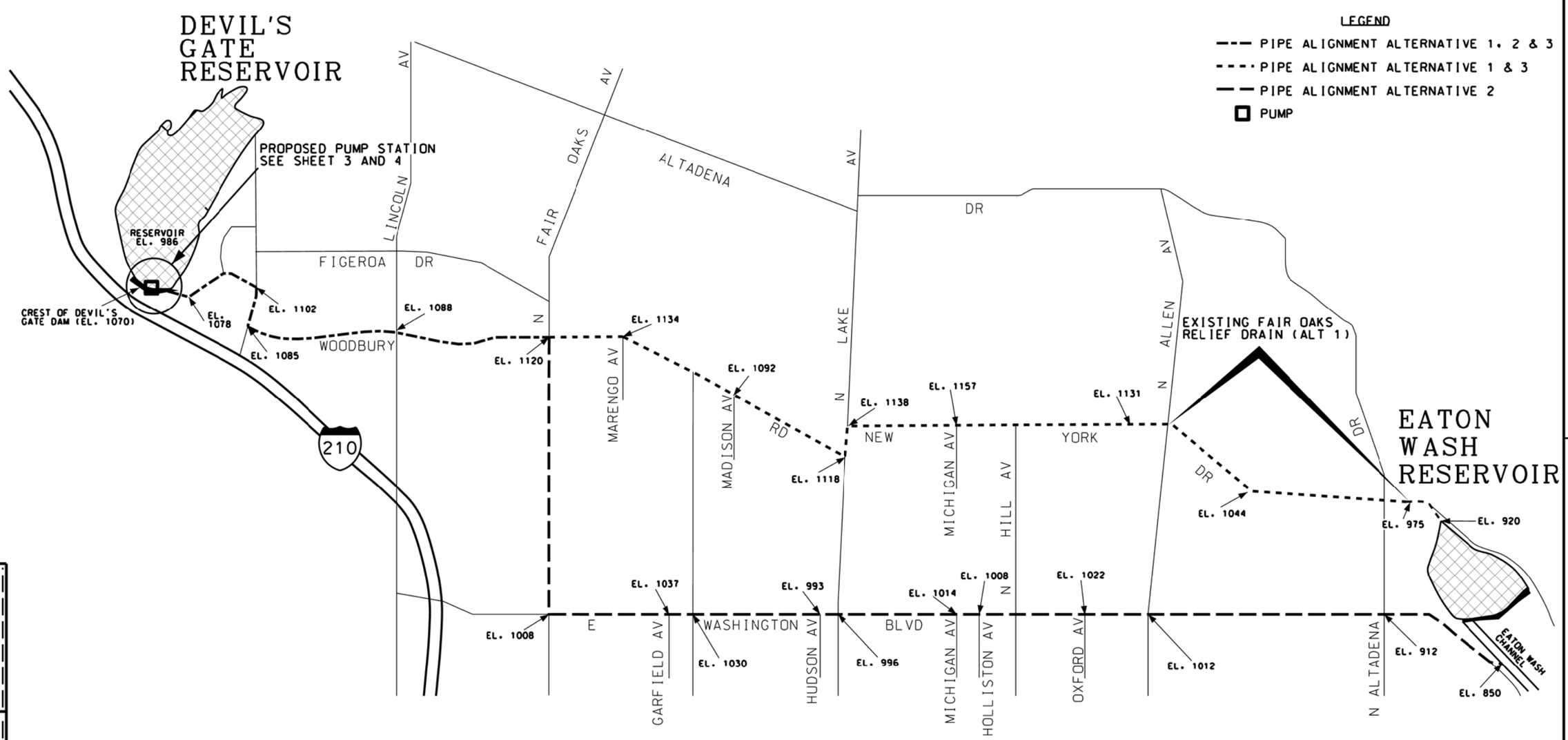

PIPELINE ALIGNMENT PLAN

NOT TO SCALE

CONCEPT ONLY

NOTE:

1. ALL ELEVATIONS IN FEET.
2. ALL ELEVATIONS ARE AT STREET LEVEL UNLESS OTHERWISE INDICATED.

DATE	MK	DESCRIPTION

REVISIONS

REGISTERED PROFESSIONAL ENGINEER — CIVIL — STATE OF CALIFORNIA

PROJECT ENGINEER DATE

COUNTY OF LOS ANGELES DEPARTMENT OF PUBLIC WORKS

DEVIL'S GATE DAM
RESERVOIR WATER CONSERVATION PROJECT

PROPOSED PIPE ALIGNMENT PLAN

JOB H0321042 DWG SHEET 2 OF 6

CADD PROJECT FILE NAME
CHECKER
DESIGNER
DRAFTER A. WONG

DATE: $DATE$ TIME: $TIME$ FILE: $FILEL$

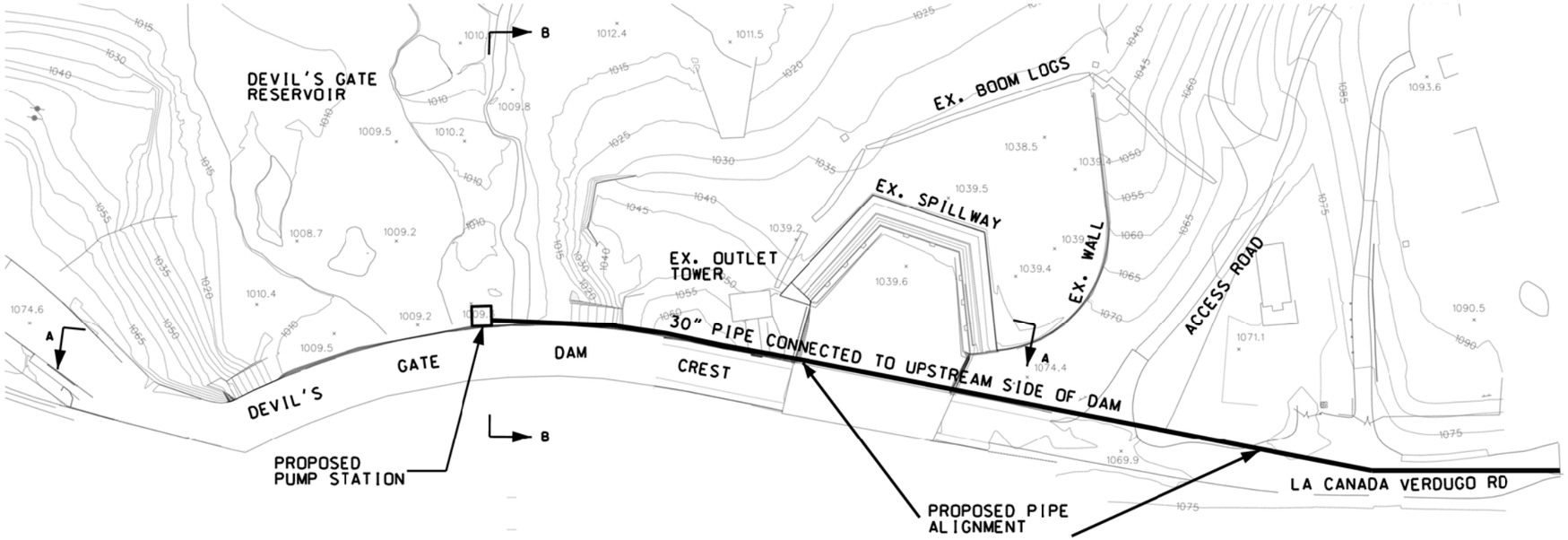

ALTERNATIVE A: DEVIL'S GATE DAM

PLAN
NOT TO SCALE

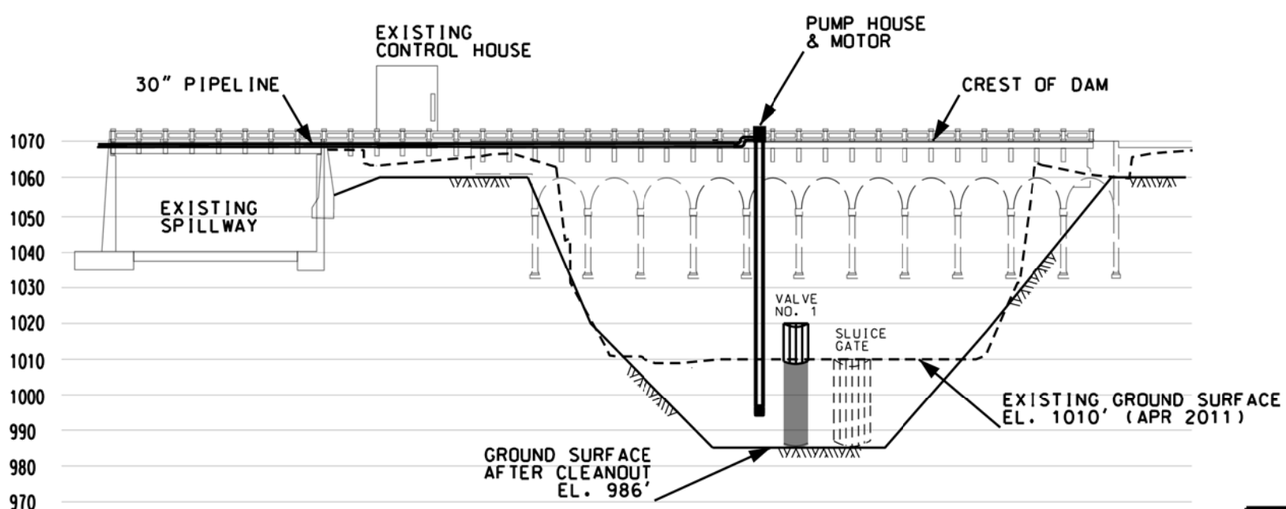

SECTION A-A

PUMP & PIPELINE PROFILE
NOT TO SCALE

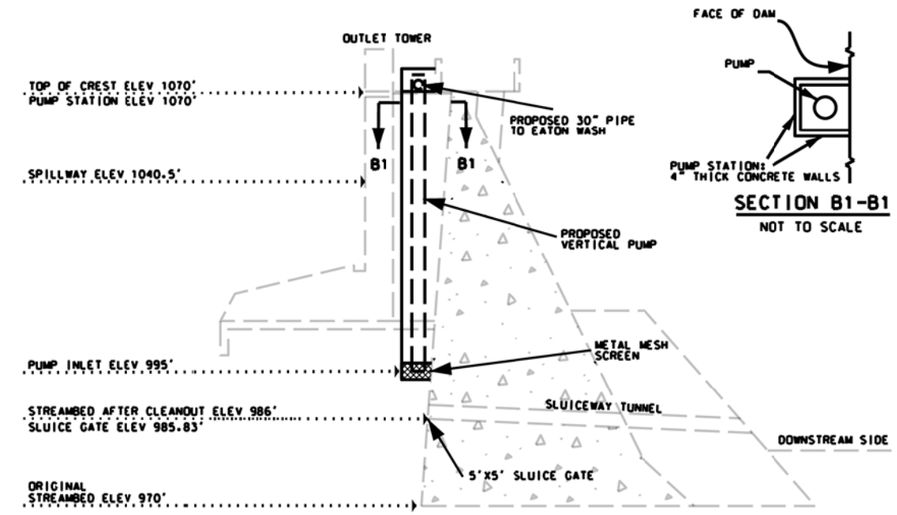

SECTION B-B

PUMP STATION PROFILE
NOT TO SCALE

SECTION B1-B1

NOT TO SCALE

CONCEPT ONLY

DATE	NO.	DESCRIPTION

REVISIONS

PROJECT ENGINEER DATE

COUNTY OF LOS ANGELES DEPARTMENT OF PUBLIC WORKS

DEVIL'S GATE DAM
RESERVOIR WATER CONSERVATION PROJECT

PUMP ALTERNATIVE A
PLAN AND PROFILE

JOB H0321042 | DWG | SHEET 3 OF 6

DRAFTER A. WONG | DESIGNER | CHECKER | CADD PROJECT FILE NAME | REVIEWED BY | DATE

DATE: $DATE$ TIME: $TIME$ FILE: $FILEL$

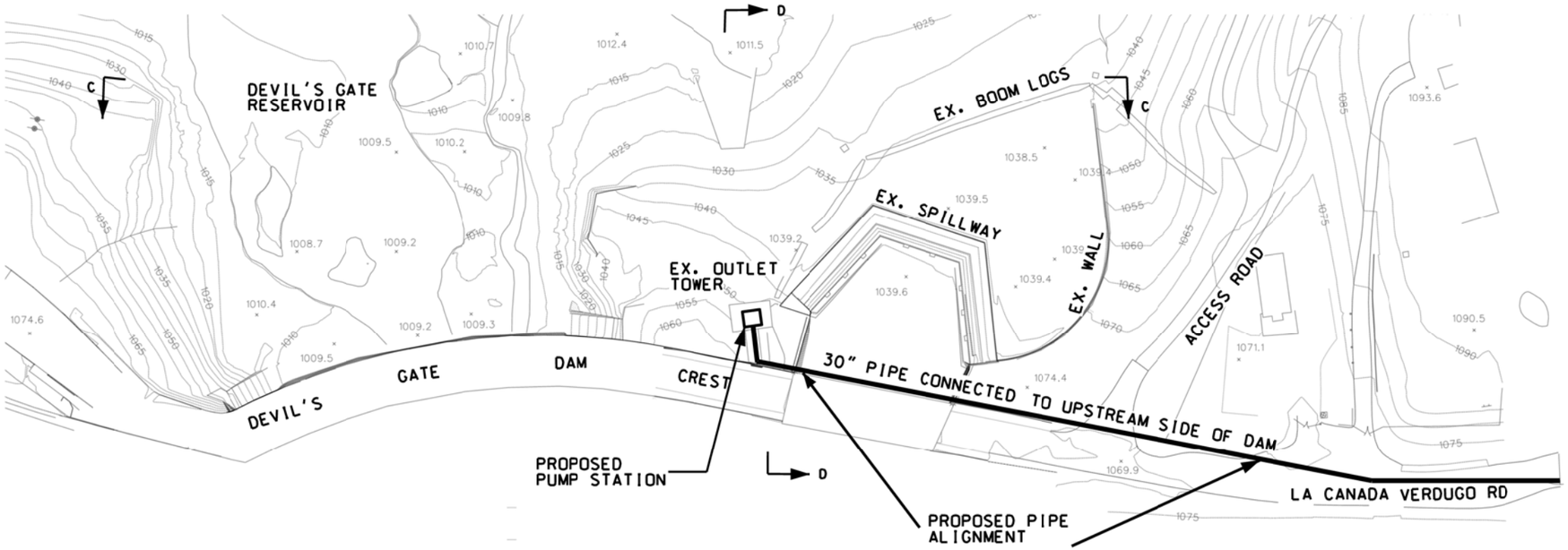

ALTERNATIVE B: DEVIL'S GATE DAM

PLAN
NOT TO SCALE

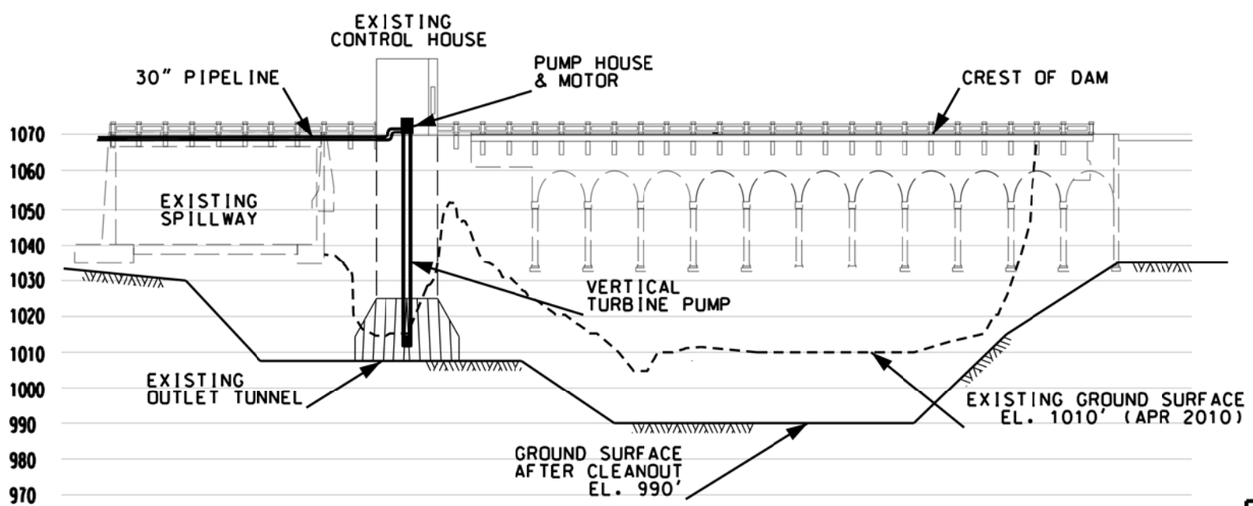

SECTION C-C

PUMP & PIPELINE PROFILE
NOT TO SCALE

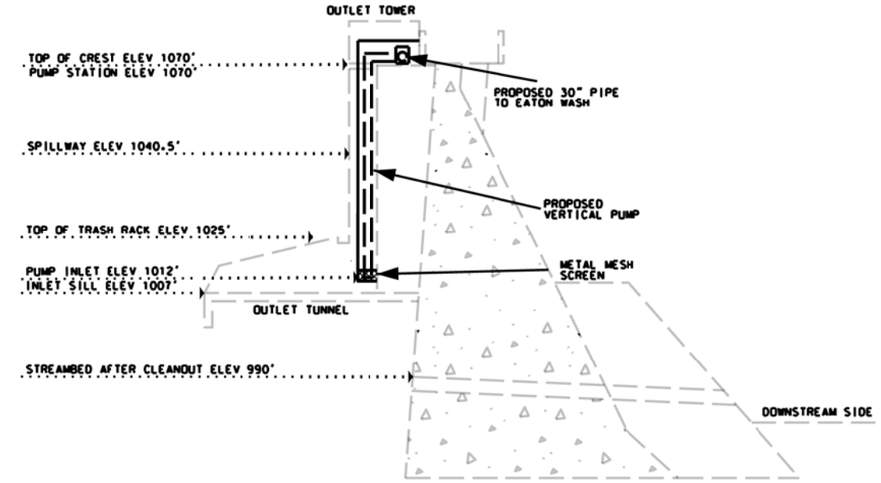

SECTION D-D

PUMP STATION PROFILE
NOT TO SCALE

CONCEPT ONLY

DATE	NO.	DESCRIPTION

REVISIONS

PROJECT ENGINEER DATE

COUNTY OF LOS ANGELES DEPARTMENT OF PUBLIC WORKS

DEVIL'S GATE DAM
RESERVOIR WATER CONSERVATION PROJECT

PUMP ALTERNATIVE B
PLAN AND PROFILE

JOB H0321042 DWG SHEET 4 OF 6

DRAFTER A. WONG | DESIGNER | CHECKER | CADD PROJECT FILE NAME | REVIEWED BY | DATE

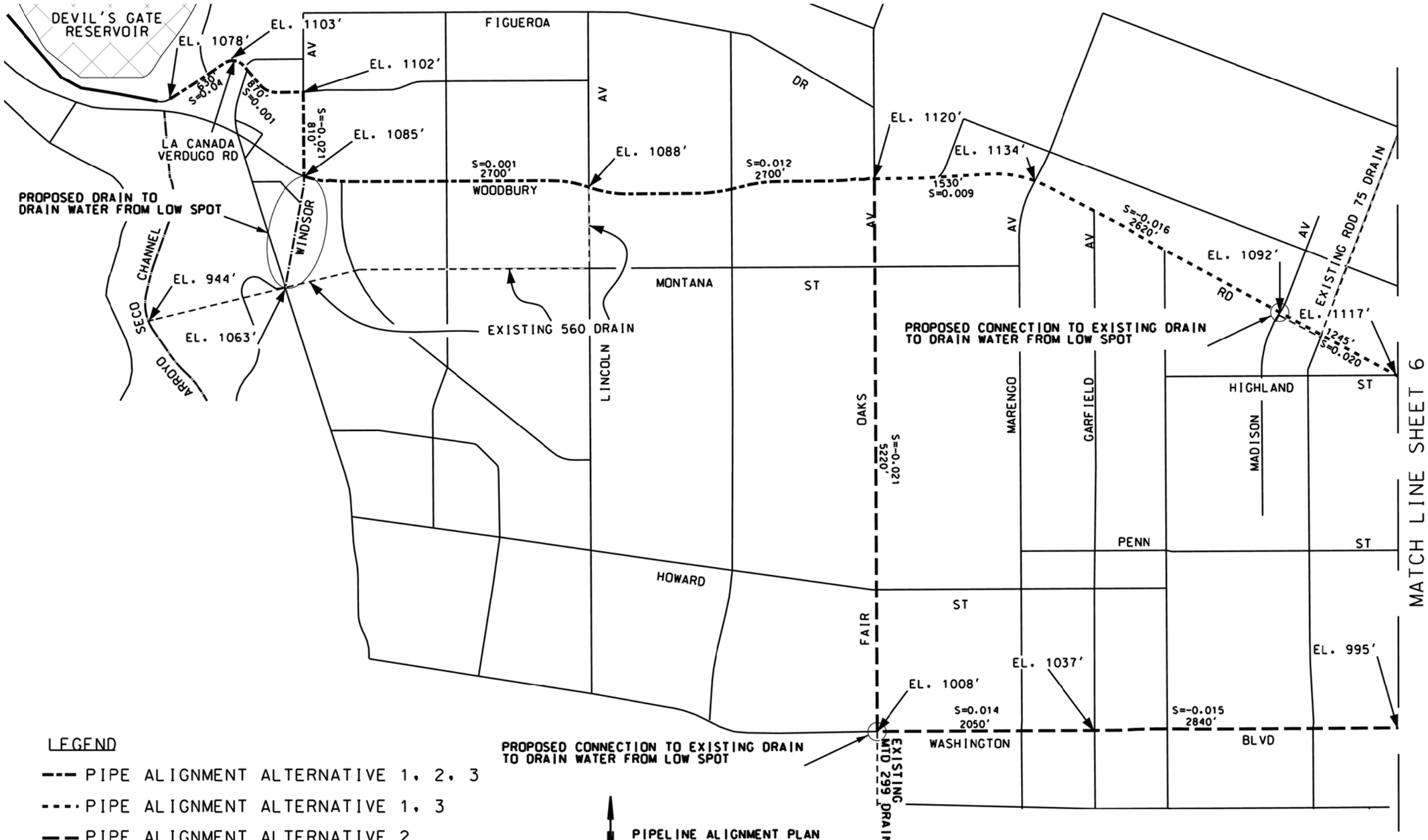

LEGEND

--- PIPE ALIGNMENT ALTERNATIVE 1, 2, 3

-·-· PIPE ALIGNMENT ALTERNATIVE 1, 3

— — PIPE ALIGNMENT ALTERNATIVE 2

NOTE

1. ALL ELEVATIONS ARE AT STREET LEVEL UNLESS OTHERWISE INDICATED.
2. SLOPES AND DISTANCES OF PIPELINE SHOWN.

PIPELINE ALIGNMENT PLAN

NOT TO SCALE

CONCEPT ONLY

DATE	MK	DESCRIPTION

REVISIONS

PROJECT ENGINEER DATE

COUNTY OF LOS ANGELES DEPARTMENT OF PUBLIC WORKS

DEVIL'S GATE DAM

RESERVOIR WATER CONSERVATION PROJECT

PROPOSED PIPE ALIGNMENT DETAILS

JOB H0321042 DWG SHEET 5 OF 6

DRAFTER A. WONG

DESIGNER

CHECKER

CADD PROJECT FILE NAME

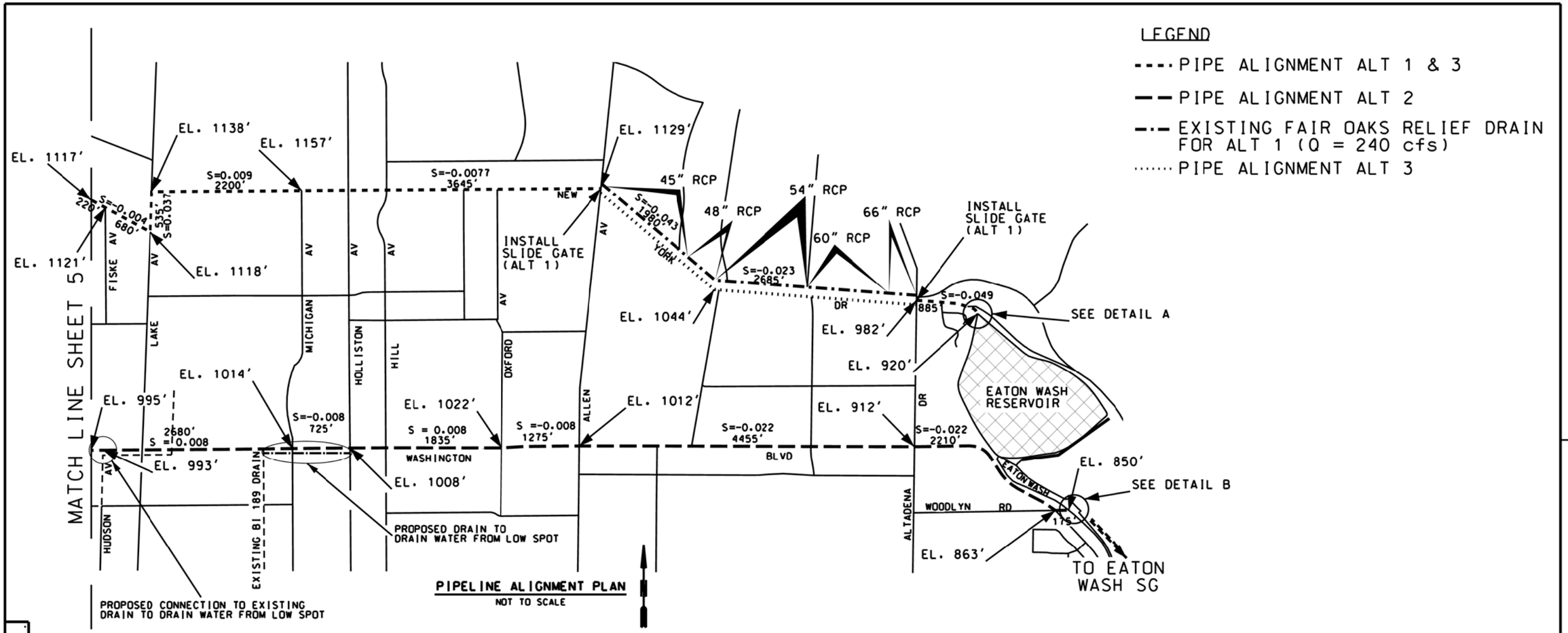

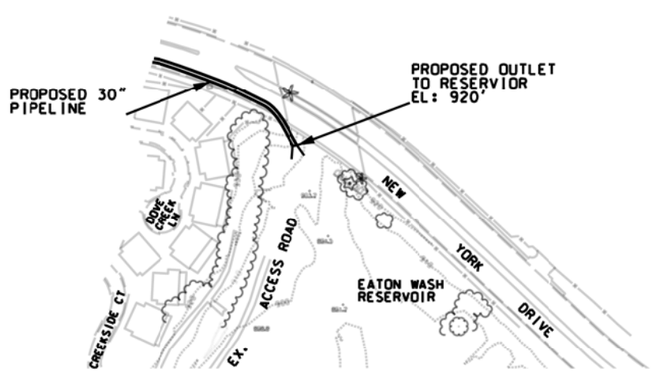

DETAIL A: ALTERNATIVE 1 & 3
PLAN
NOT TO SCALE

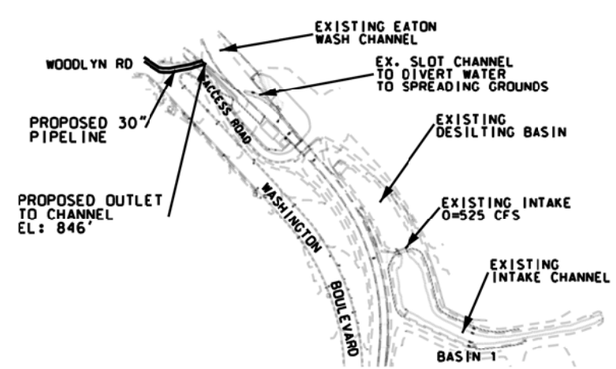

DETAIL B: ALTERNATIVE 2
PLAN
NOT TO SCALE

NOTE

1. ALL ELEVATIONS ARE AT STREET LEVEL UNLESS OTHERWISE INDICATED.
2. SLOPES AND DISTANCES OF PIPELINE SHOWN.

CONCEPT ONLY

DATE	MK	DESCRIPTION

REVISIONS

PROJECT ENGINEER DATE

COUNTY OF LOS ANGELES DEPARTMENT OF PUBLIC WORKS

DEVIL'S GATE DAM
RESERVOIR WATER CONSERVATION PROJECT

PROPOSED PIPE ALIGNMENT DETAILS

JOB H0321042 DWG SHEET 6 OF 6

CADD PROJECT FILE NAME
CHECKER
DESIGNER
DRAFTER A. WONG

DATE: 9DATE9 TIME: 9TIME9 FILE: 9FILE19