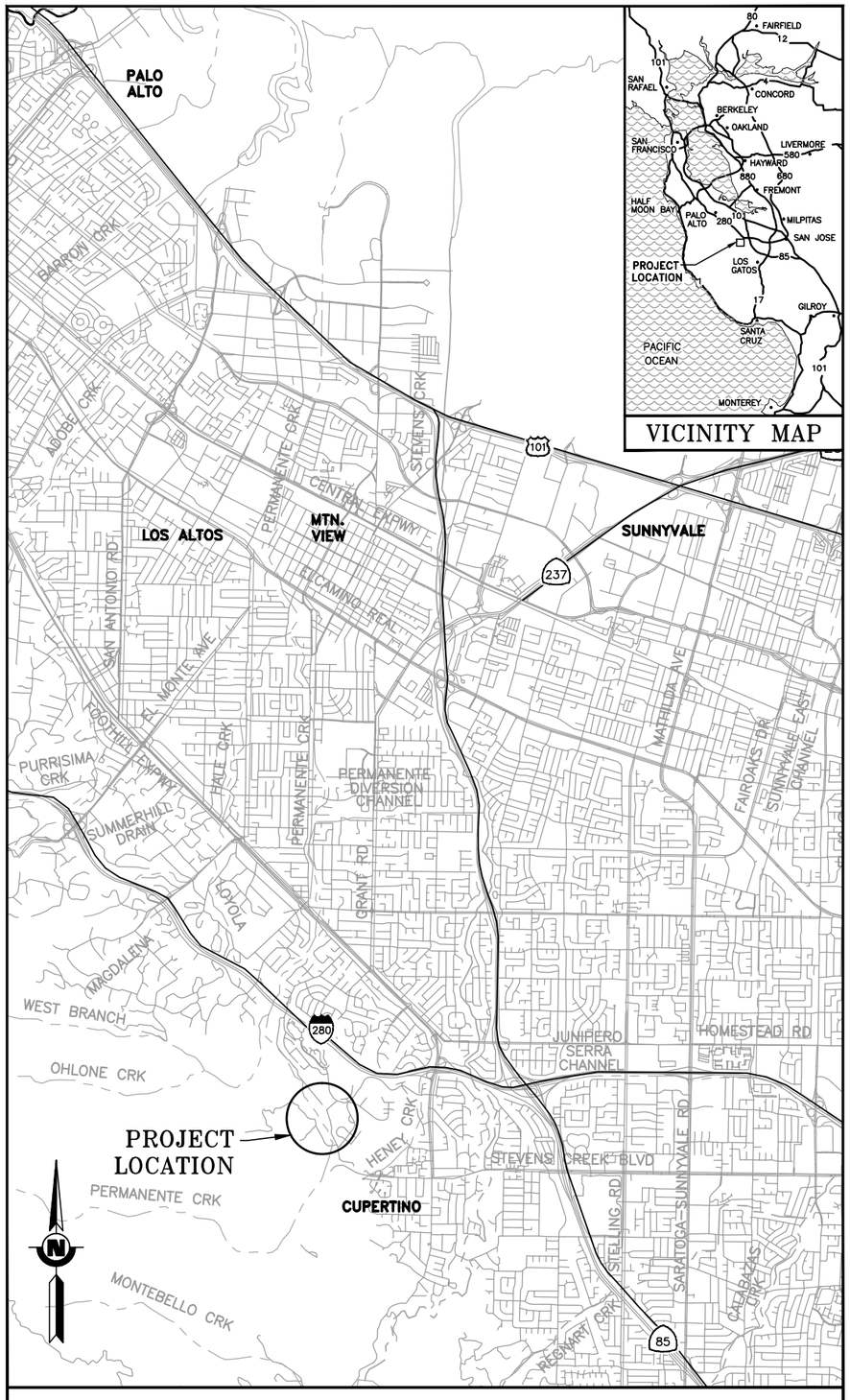

LOCATION MAP
SCALE: 1"=3000'

MAP AND CONSTRUCTION PLAN

FOR

PERMANENTE CREEK FLOOD PROTECTION PROJECT

FLOOD PROTECTION IMPROVEMENTS

RANCHO SAN ANTONIO COUNTY PARK

Santa Clara Valley Water District SM

PREPARED BY:

Hatch Mott MacDonald

REGISTERED PROFESSIONAL ENGINEER
FRANK K. SAKAKIHARA
C37141
CIVIL
STATE OF CALIFORNIA

NAME — DATE
PRINCIPAL ENGINEER

APPROVED BY:

NAME (SPM – CPSD OR UM) — DATE
TITLE – DIVISION
SANTA CLARA VALLEY WATER DISTRICT

NAME (AOO – CPSD OR DOO) — DATE
TITLE – DIVISION
SANTA CLARA VALLEY WATER DISTRICT

ACCEPTED BY:

NAME (DOO – OWNER) — DATE
TITLE – DIVISION
SANTA CLARA VALLEY WATER DISTRICT

60% DESIGN
04-16-12

CONTRACT NUMBER
C–XXXXX
PROJECT NUMBER
26244001
SHEET CODE:
G–1
PAGE NUMBER: OF

USERNAME: MEY49254 Mon 16 Apr 2012 11:21am
FILENAME: C:\pwworking\mm\external\mey49254\dms24086\G-01
DOCUMENT NUMBER: XXXX-X-0000-0000000.00

SHEET CODE	SHEET DESCRIPTION	SHEET NO.
	GENERAL	
G-1	COVER SHEET	
G-2	DRAWING LIST AND GENERAL NOTES	
G-3	SITE PLAN, SURVEY CONTROL AND DRAWING LAYOUT INDEX	
G-4	ABBREVIATIONS AND LEGENDS	
G-5	PROPOSED STAGING AREA AND CONSTRUCTION SEQUENCING PLAN	
G-6	CONSTRUCTION SEQUENCING PLAN, CEMETERY MAINTENANCE ROAD REALIIGNMENT	
	EXISTING TOPOGRAPHY AND DEMOLITION	
D-1	EXISTING TOPO AND DEMOLITION PLAN	
D-2	EXISTING TOPO AND DEMOLITION PLAN	
D-3	EXISTING TOPO AND DEMOLITION PLAN	
	CIVIL	
C-5	NORTH BASIN GRADING PLAN	
C-6	NORTH BASIN GRADING PLAN	
C-8	SOUTH BASIN GRADING PLAN	
C-10	NORTH BASIN SECTIONS	
C-11	NORTH BASIN SECTIONS	
C-13	SOUTH BASIN SECTIONS	
C-15	PARKING ACCESS ROAD REALIGNMENT PLAN AND PROFILE	
C-16	TYPICAL ROADWAY SECTIONS	
C-17	PARKING LOT LAYOUT PLAN (TO BE INCLUDED IN 90% SUBMITTAL)	
C-18	PARKING LOT PAVING AND DRAINAGE PLAN	
C-19	PARKING LOT TYPICAL SECTIONS AND DETAILS	
C-21	CEMETERY MAINTENANCE ROAD REALIGNMENT PLAN AND PROFILE	
C-22	CEMETERY MAINTENANCE ROAD REALIGNMENT TYPICAL SECTIONS	
C-24	CEMETERY ACCESS ROAD PLAN AND PROFILE	
C-27	HAMMOND-SNYDER TRAIL LAYOUT & DETAILS	
C-30	NORTH BASIN INLET PIPE PLAN AND PROFILE	
C-31	NORTH BASIN INLET PIPE PLAN AND PROFILE	
C-33	BASIN OUTLET PIPE PROFILES	
C-35	SLOPE PROTECTION DIMENSIONS	
C-36	DRAINAGE DETAILS	
C-37	WELL RELOCATION PLAN (TO BE INCLUDED IN 90% SUBMITTAL)	
C-38	WELL RELOCATION DETAILS (TO BE INCLUDED IN 90% SUBMITTAL)	
C-39	WELL RELOCATION DETAILS (TO BE INCLUDED IN 90% SUBMITTAL)	
C-40	ON SITE SEPTIC SYSTEM AND DRAINFIELD	
C-41	DRAINFIELD DETAILS AND SECTIONS	
C-45	SPOIL HAUL ROUTE PLAN	
	STRUCTURAL	
S-1	STRUCTURAL NOTES	
S-2	DIVERSION STRUCTURE PLAN AND ELEVATION	
S-3	CONTROL STRUCTURE SECTIONS AND DETAILS	
S-4	CONTROL STRUCTURE SECTIONS AND DETAILS	
S-5	IMPACT STILLING BASIN PLAN AND SECTIONS	
	LANDSCAPING	
L-1	KEY PLANS	
L-2	FENCING & SIGNAGE PLAN – PARKING LOT	
L-3	IRRIGATION PLAN – PARKING LOT	
L-4	IRRIGATION NOTES	
L-5	MITIGATION PLANTING PLANS	
L-6	PLANTING PLAN – NORTH BASIN	
L-7	PLANTING PLAN – SOUTH BASIN	
L-8	PLANTING PLAN – PARKING LOT	
L-9	FENCING & SIGNAGE DETAILS	
L-10	IRRIGATION AND PLANTING DETAILS	
L-11	IRRIGATION AND PLANTING DETAILS	
L-12	IRRIGATION AND PLANTING DETAILS	

GENERAL NOTES

1. ALL EXISTING FACILITIES, STRUCTURES, TREES, FENCES, LANDSCAPING, ETC., DESIGNATED "EXIST" OR SHOWN EXISTING (DASHED OR SCREENED LINES) ARE TO REMAIN UNLESS NOTED OTHERWISE ON THE DEMOLITION DWGS.
2. EXISTING UTILITIES SHALL BE MAINTAINED OPERATIONAL AT ALL TIMES. ONLY THOSE SPECIFICALLY DESIGNATED FOR REMOVAL AS SHOWN ON THE DRAWINGS, OR AS DIRECTED BY THE ENGINEER SHALL BE REMOVED.
3. LOCATIONS AND DEPTHS OF EXISTING UNDERGROUND UTILITIES AS SHOWN ON THE PLANS ARE BASED ON INFORMATION FROM THE UTILITY AND ARE TO BE CONSIDERED AS APPROXIMATE ONLY.
4. PRIOR TO PERFORMING ANY WORK IN THE VICINITY OF EXISTING UNDERGROUND UTILITIES, THE CONTRACTOR SHALL VERIFY THEIR LOCATIONS AND DEPTHS AND TAKE PROPER PRECAUTIONS TO AVOID ANY DAMAGE TO THEM. CALL "(811) LOCATES.
5. THE CONTRACTOR SHALL COMPLY WITH THE REQUIREMENTS OF THE STATE WATER RESOURCE BOARD FOR STORM WATER DISCHARGES ASSOCIATED WITH CONSTRUCTION ACTIVITIES.

DESIGN NOTES

1. SURVEY CONTROL INFORMATION
   BASIS OF ELEVATION:
   VERTICAL CONTROL IS NAVD 88

   BASIS OF BEARING:
   HORIZONTAL DATUM IS NAD 83
2. CALIFORNIA COORDINATE SYSTEM ZONE III FEET

REDUCED HALF SIZE (11X17)

USERNAME: BillShad Tue 08 Jul 2008 09:32am
FILENAME: C:\pwworking\mrm\external\mey49254\dms24086\G-02

DOCUMENT NUMBER: XXXX-X-0000-0000000.00

REV	DESCRIPTION	DATE	APPR.
A	30% REVIEW SUBMITTAL	11/11	J.S.
B	60% REVIEW SUBMITTAL	04/12	J.S.

REFERENCE INFORMATION AND NOTES

Hatch Mott MacDonald

DATE 4-16-12
DESIGN Y LIAO
DRAWN K MEYER
CHECKED G RITTER

ENGINEERING CERTIFICATION
REGISTERED PROFESSIONAL ENGINEER TRACIE K. SAKAKIHARA C37141 CIVIL STATE OF CALIFORNIA
PROJECT ENGINEER DATE

Santa Clara Valley Water District
ACCEPTED BY DISTRICT

PROJECT NAME AND SHEET DESCRIPTION:
PERMANENTE CREEK
FLOOD PROTECTION PROJECT
RANCHO SAN ANTONIO
DRAWING LIST AND GENERAL NOTES

SCALE: NOT TO SCALE
VERIFY SCALES 0 1"
BAR IS ONE INCH ON ORIGINAL DRAWING IF NOT ONE INCH ON THIS SHEET, ADJUST SCALES ACCORDINGLY

PROJECT NUMBER 26244001
SHEET CODE: G-2
PAGE NUMBER: OF

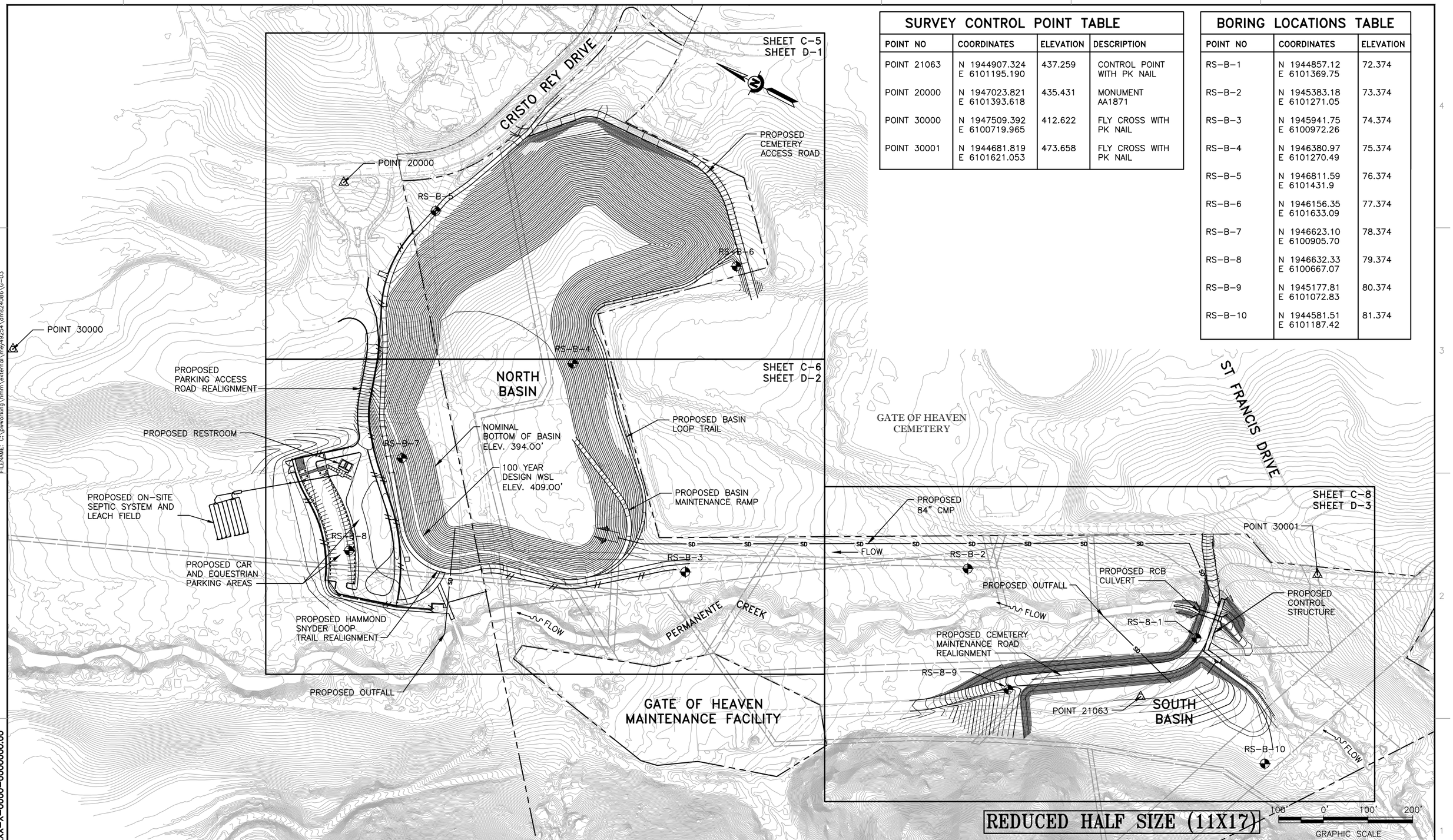

SURVEY CONTROL POINT TABLE

POINT NO	COORDINATES	ELEVATION	DESCRIPTION
POINT 21063	N 1944907.324 E 6101195.190	437.259	CONTROL POINT WITH PK NAIL
POINT 20000	N 1947023.821 E 6101393.618	435.431	MONUMENT AA1871
POINT 30000	N 1947509.392 E 6100719.965	412.622	FLY CROSS WITH PK NAIL
POINT 30001	N 1944681.819 E 6101621.053	473.658	FLY CROSS WITH PK NAIL

BORING LOCATIONS TABLE

POINT NO	COORDINATES	ELEVATION
RS-B-1	N 1944857.12 E 6101369.75	72.374
RS-B-2	N 1945383.18 E 6101271.05	73.374
RS-B-3	N 1945941.75 E 6100972.26	74.374
RS-B-4	N 1946380.97 E 6101270.49	75.374
RS-B-5	N 1946811.59 E 6101431.9	76.374
RS-B-6	N 1946156.35 E 6101633.09	77.374
RS-B-7	N 1946623.10 E 6100905.70	78.374
RS-B-8	N 1946632.33 E 6100667.07	79.374
RS-B-9	N 1945177.81 E 6101072.83	80.374
RS-B-10	N 1944581.51 E 6101187.42	81.374

USERNAME: BillShad Tue 08 Jul 2008 09:32am
FILENAME: C:\pwworking\mrm\external\mey42254\dms24086\G-03

DOCUMENT NUMBER: XXXX-X-0000-0000000.00

REV	DESCRIPTION	DATE	APPR.
A	30% REVIEW SUBMITTAL	11/11	T.S.
B	60% REVIEW SUBMITTAL	04/12	T.S.

REFERENCE INFORMATION AND NOTES

Hatch Mott MacDonald

DATE	4-16-12
DESIGN	Y LIAO
DRAWN	K MEYER
CHECKED	G RITTER

ENGINEERING CERTIFICATION

REGISTERED PROFESSIONAL ENGINEER
TAKAGI K SAKAKIHARA
C37141
CIVIL
STATE OF CALIFORNIA

PROJECT ENGINEER DATE

Santa Clara Valley Water District

ACCEPTED BY DISTRICT

PROJECT NAME AND SHEET DESCRIPTION:

PERMANENTE CREEK FLOOD PROTECTION PROJECT

RANCHO SAN ANTONIO
SITE PLAN, SURVEY CONTROL
AND DRAWING LAYOUT INDEX

SCALE: 1" = 100'

VERIFY SCALES: 0 1"
BAR IS ONE INCH ON ORIGINAL DRAWING IF NOT ONE INCH ON THIS SHEET, ADJUST SCALES ACCORDINGLY

PROJECT NUMBER: 26244001

SHEET CODE: G-3

PAGE NUMBER: OF

ABBREVIATIONS

ABM – AIR BLOWN MORTAR
ABS – ACRYLONITRILE–BUTADIENCE–STYRENE
AC – ASPHALT CONCRETE
ACP – ASBESTOS CEMENT PIPE
AISI – AMERICAN IRON & STEEL INSTITUTE
ALIGN – ALIGNMENT
AMP – AMPERES
ANSI – AMERICAN NATIONAL STANDARDS INSTITUTE
APPROX – APPROXIMATE
ARV – AIR RELEASE VALVE
ASA – AMERICAN STANDARD ASSOCIATION
ASTM – AMERICAN SOCIETY FOR TESTING MATERIALS
AWG – AMERICAN WIRE GAGE
AWWA – AMERICAN WATER WORKS ASSOCIATION

BC – BEGIN CURVE
BM – BENCH MARK
BT – BACKHOE TRENCH
BVC – BEGIN VERTICAL CURVE
BW – BOTH WAYS

CB – CATCH BASIN (INLET)
CCCL – CEMENT MORTAR COATED & LINED STEEL PIPE
CCEM – CEMENT CONDUIT
CCTL – CORROSION CONTROL TEST LEADS
CCP – CONCRETE CYLINDER PIPE
CFM – CUBIC FEET PER MINUTE
CI – CAST IRON
CIP – CAST IRON PIPE
CL – CLEARANCE
CLR – CLEAR
CMC – CEMENT MORTAR COAT
CML – CEMENT MORTAR LINE
CMP – CORRUGATED METAL PIPE
CO – CLEAN OUT
CONC – CONCRETE
CONT – CONTINUOUS
CP – CEMENT PIPE
CPC – PLASTIC CONDUIT
CSP – CORRUGATED STEEL PIPE
CTP – CABLE TELEVISION POLE
CTV – CABLE TV
CU FT – CUBIC FEET
CYL – CYLINDER
CIPP – CAST–IN–PLACE PIPE

DH – DRILL HOLES
DIA – DIAMETER
DICL – DUCTILE IRON CEMENT LINED
DIP – DUCTILE IRON PIPE
DPDT – DOUBLE POLE DOUBLE THROW
D/S – DOWNSTREAM
DWR – DEPARTMENT OF WATER RESOURCES

EC – END CURVE
ELEC – ELECTRICAL
EL, ELEV – ELEVATION
EP – EDGE OF PAVEMENT
EXIST – EXISTING
EVC – END VERTICAL CURVE

FF – FULL FORCE
FH – FIRE HYDRANT
FKCL – FIBERGLASS–KRAFT WRAP CEMENT LINED
FLG – FLANGE
FP – FEEDER PRESSURE
FT – FEET

GA – GAGE
GALV – GALVANIZED
GFI – GROUND FAULT INTERRUPTER

HC – HOUSE CONNECTION (SANITARY)
HMW/PE – HIGH MOLECULAR WEIGHT POLYETHYLENE
HORIZ – HORIZONTAL
HP – HORSEPOWER

ID – INSIDE DIAMETER
IF – INSIDE FACE
IL – INDUCTIVE LOOP
IN – INCH
INSUL – INSULATION
INV – INVERT
IP – IRON PIPE
IPS – IRON PIPE SIZE

JT – JOINT TRENCH
KV – KILO VOLT

LB – CONDUIT FITTING ELBOW
LG – LONG
LLV – LONG LEG VERTICAL
LT – LEFT

MAINT – MAINTENANCE
MAX – MAXIMUM
MCD – MULTIPLE CONDUITS
MCI – MCI TELECOMMUNICATION CORP.
MH – MANHOLE
MIN – MINIMUM
MON – MONUMENT
MW – MONITORING WELL

N – NITROGEN
N/A – NOT APPLICABLE
NE – NORTHEAST
NEMA – NATIONAL ELECTRICAL MANUFACTURERS ASSOCIATION
NO – NUMBER
NOM – NOMINAL
NTS – NOT TO SCALE
NW – NORTHWEST

OC – ON CENTER
OD – OUTSIDE DIAMETER
OF – OUTSIDE FACE
OH – OVERHEAD
OW – OBSERVATION WELL

PCC – PORTLAND CEMENT CONCRETE
PCCP – PRESTRESSED CONCRETE CYLINDER PIPE
PE – PLAIN END
PG&E – PACIFIC GAS AND ELECTRIC
PI – POINT OF INTERSECTION
PIVC – POINT OF INTERSECTION OF VERTICAL CURVE
PK – PARKER–KALON SURVEY NAIL
PL – PLASTIC LINE
POT – POINT ON TANGENT
PP – POWER POLE
PRC – POINT OF REVERSE CURVE
PSI – POUND PER SQUARE INCH
PT&T – PACIFIC TELEPHONE AND TELEGRAPH
PUE – PUBLIC UTILITY EASEMENT
PV – PRECAST VAULT
PVC – POLYVINYL CHLORIDE
PVMT – PAVEMENT
PW – PUMPING WELL

R – RADIUS
RCB – REINFORCED CONCRETE BOX
RCP – REINFORCED CONCRETE PIPE
RE – REFERENCE ELECTRODE
REBAR – REINFORCING BAR
REINF – REINFORCED
REQ'D – REQUIRED
RR – RAILROAD
RT – RIGHT
RTU – REMOTE TERMINAL UNIT
R/W – RIGHT OF WAY

S – SLOPE
SCHED – SCHEDULE
SCVWD – SANTA CLARA VALLEY WATER DISTRICT
SD – STORM DRAIN
SE – SOUTHEAST
SHLD – SHOULDER
SHT – SHEET
SJMW – SAN JOSE MUNICIPAL WATER
SJWC – SAN JOSE WATER COMPANY
SOMCL – STANDARD OIL MASTIC CEMENT LINED
SPECS – SPECIFICATIONS
SPRR – SOUTHERN PACIFIC RAILROAD
SQ – SQUARE
SS – SANITARY SEWER
SSTL – STAINLESS STEEL
ST – STREET
STA – STATION
STD – STANDARD
STL – STEEL
STRD – STRANDED
SW – SOUTHWEST
SYM – SYMMETRICAL

T – TELEPHONE
T – THICKNESS OF PLATE OR DIMENSION OF WELD
TBM – TEMPORARY BENCH MARK
TC – TELEMETRY CABLE
TCA – TEMPORARY CONSTRUCTION AREA
TCE – TEMPORARY CONSTRUCTION EASEMENT
TCS – TELEMETRY CABLE SPLICE
TEL – TELEPHONE
THW – THERMAL PLASTIC MOISTURE AND HEAT RESISTANT
THWN – THERMAL PLASTIC WITH NYLON COATING, MOISTURE AND HEAT RESISTANT
TOB – TOP OF BANK
TP – TEST PIT LOCATION
TR – TAPE WRAPPED
TS – TRAFFIC SIGNAL
TYP – TYPICAL
T/P – TOP OF PAVEMENT

UG – UNDERGROUND
UPRR – UNION PACIFIC RAILROAD
U/S – UPSTREAM
USGS – UNITED STATES GEOLOGICAL SURVEY

V – VOLTAGE
VAC – VOLTAGE ALTERNATING CURRENT
VCD – VACANT CONDUIT
VCP – VITRIFIED CLAY PIPE
VERT – VERTICAL

W – WATER
WP – WORK POINT
WSP – WELDED STEEL PIPE
WSCL – WRAPPED STEEL CEMENT LINED
WSL – WATER SURFACE LEVEL
WV – WATER VALVE
WWF – WELDED WIRE FABRIC
W/ – WITH

SPECIAL CHARACTERS

& – AND
@ – AT
℄ – CENTERLINE
Ø – DIAMETER
ℙ – PROPERTY LINE

DETAIL AND SECTION DESIGNATION

* IF SECTION OR DETAIL APPEARS ON THE SAME DRAWING AS THE CALLOUT, THE DRAWING REFERENCE IS REPLACED WITH A DASH (–)

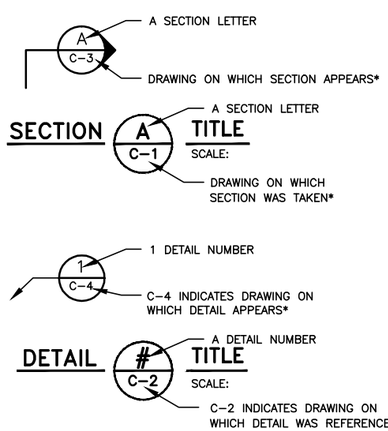

LINE TYPE LEGEND

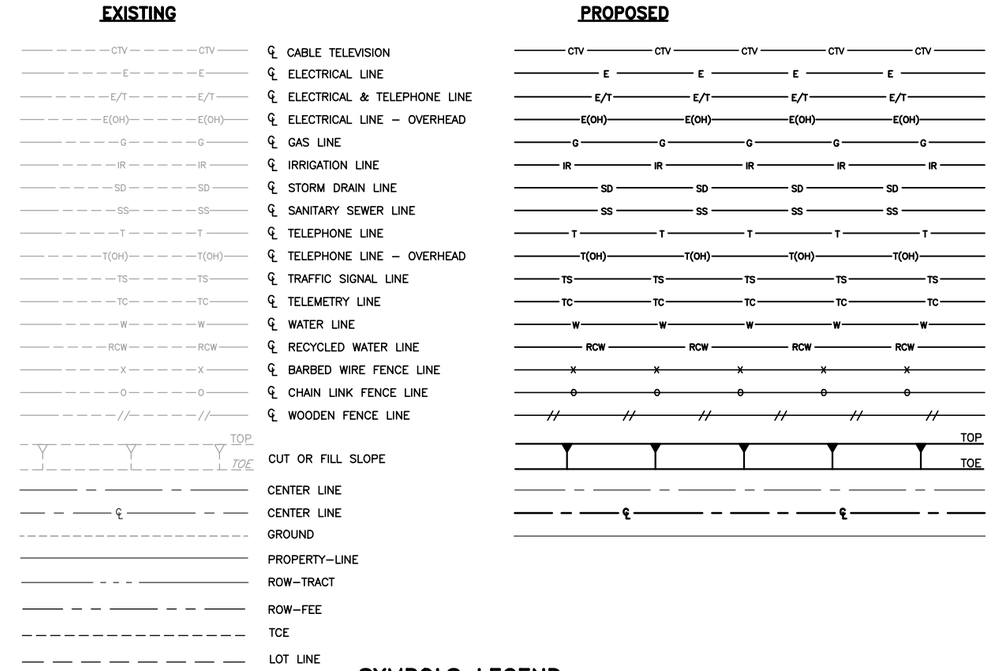

SYMBOLS LEGEND

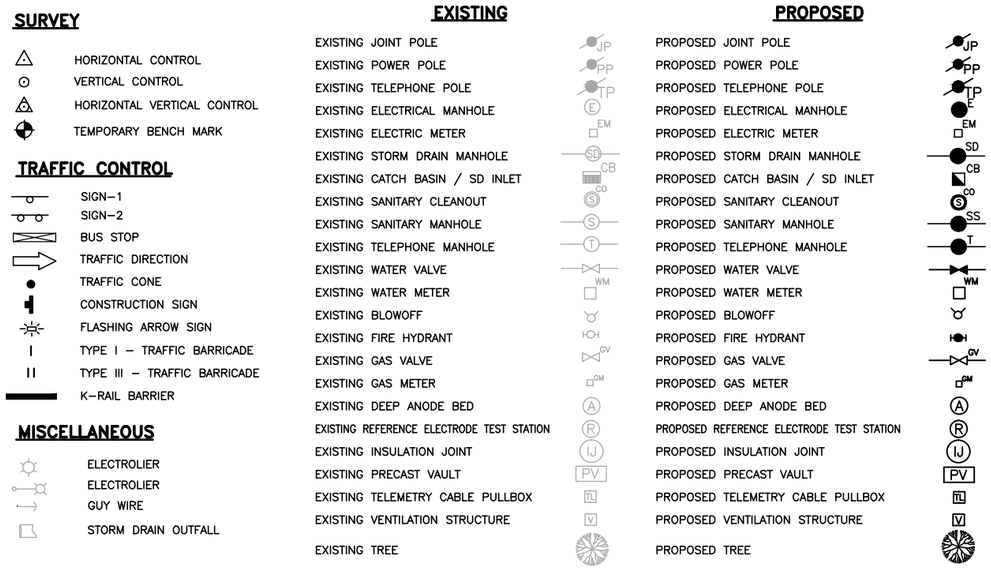

REDUCED HALF SIZE (11X17)

REV	DESCRIPTION	DATE	APPR.
A	30% REVIEW SUBMITTAL	11/11	J.S.
B	60% REVIEW SUBMITTAL	04/12	J.S.

REFERENCE INFORMATION AND NOTES

Hatch Mott MacDonald

DATE 4–16–12
DESIGN Y LIAO
DRAWN K MEYER
CHECKED G RITTER

ENGINEERING CERTIFICATION
REGISTERED PROFESSIONAL ENGINEER TRACIE K. SAKAKIHARA C37141 CIVIL STATE OF CALIFORNIA
PROJECT ENGINEER DATE

Santa Clara Valley Water District
ACCEPTED BY DISTRICT

PROJECT NAME AND SHEET DESCRIPTION:
PERMANENTE CREEK FLOOD PROTECTION PROJECT
RANCHO SAN ANTONIO
ABBREVIATIONS AND LEGENDS

SCALE: NOT TO SCALE
VERIFY SCALES: 0 1"
BAR IS ONE INCH ON ORIGINAL DRAWING IF NOT ONE INCH ON THIS SHEET, ADJUST SCALES ACCORDINGLY

PROJECT NUMBER: 26244001
SHEET CODE: G–4
PAGE NUMBER: OF

DOCUMENT NUMBER: XXXX–X–0000–0000000.00

USERNAME: BRISHAD Tue 08 Jul 2008 09:32am
FILENAME: C:\pwworking\tmm\external\mey4925A\dms24086\G–04

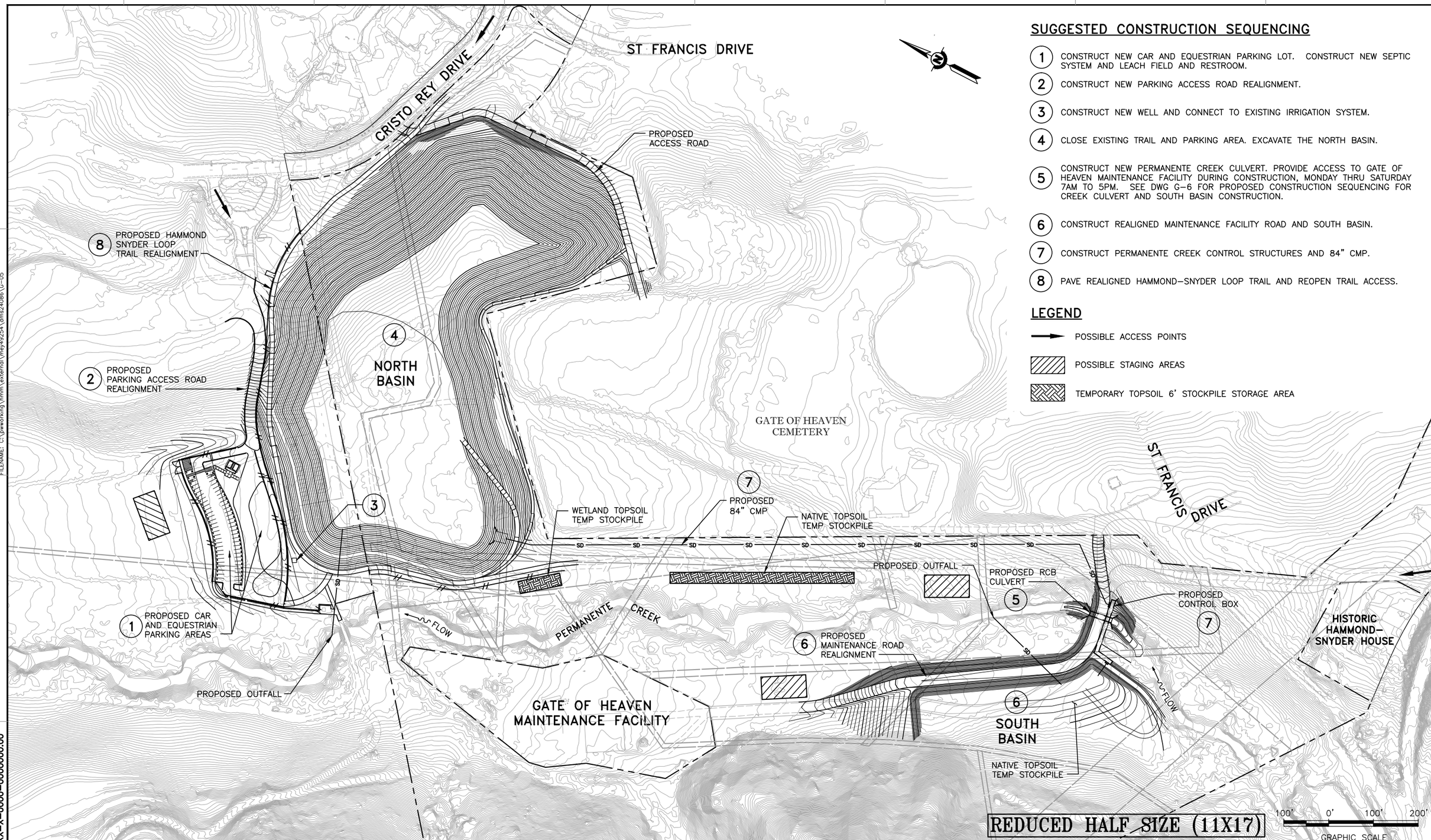

SUGGESTED CONSTRUCTION SEQUENCING

1. CONSTRUCT NEW CAR AND EQUESTRIAN PARKING LOT. CONSTRUCT NEW SEPTIC SYSTEM AND LEACH FIELD AND RESTROOM.
2. CONSTRUCT NEW PARKING ACCESS ROAD REALIGNMENT.
3. CONSTRUCT NEW WELL AND CONNECT TO EXISTING IRRIGATION SYSTEM.
4. CLOSE EXISTING TRAIL AND PARKING AREA. EXCAVATE THE NORTH BASIN.
5. CONSTRUCT NEW PERMANENTE CREEK CULVERT. PROVIDE ACCESS TO GATE OF HEAVEN MAINTENANCE FACILITY DURING CONSTRUCTION, MONDAY THRU SATURDAY 7AM TO 5PM. SEE DWG G-6 FOR PROPOSED CONSTRUCTION SEQUENCING FOR CREEK CULVERT AND SOUTH BASIN CONSTRUCTION.
6. CONSTRUCT REALIGNED MAINTENANCE FACILITY ROAD AND SOUTH BASIN.
7. CONSTRUCT PERMANENTE CREEK CONTROL STRUCTURES AND 84" CMP.
8. PAVE REALIGNED HAMMOND-SNYDER LOOP TRAIL AND REOPEN TRAIL ACCESS.

LEGEND

- POSSIBLE ACCESS POINTS
- POSSIBLE STAGING AREAS
- TEMPORARY TOPSOIL 6' STOCKPILE STORAGE AREA

USERNAME: BRISho FILENAME: C:\pwworking\mrm\external\mey49254\dms24086\G-05 Tue 08 Jul 2008 09:32am

DOCUMENT NUMBER: XXXX-X-0000-0000000.00

REV	DESCRIPTION	DATE	APPR.
A	30% REVIEW SUBMITTAL	11/11	J.S.
B	60% REVIEW SUBMITTAL	04/12	J.S.

REFERENCE INFORMATION AND NOTES

Hatch Mott MacDonald

DATE 4-16-12
DESIGN Y LIAO
DRAWN K MEYER
CHECKED G RITTER

ENGINEERING CERTIFICATION
REGISTERED PROFESSIONAL ENGINEER TAKAGI K SAKAKIHARA C37141 CIVIL STATE OF CALIFORNIA
PROJECT ENGINEER DATE

Santa Clara Valley Water District

ACCEPTED BY DISTRICT

PROJECT NAME AND SHEET DESCRIPTION:

PERMANENTE CREEK FLOOD PROTECTION PROJECT

RANCHO SAN ANTONIO
PROPOSED STAGING AREA AND CONSTRUCTION SEQUENCING PLAN

SCALE 1" = 100'
VERIFY SCALES 0 1"
BAR IS ONE INCH ON ORIGINAL DRAWING IF NOT ONE INCH ON THIS SHEET, ADJUST SCALES ACCORDINGLY

PROJECT NUMBER 26244001
SHEET CODE: G-5
PAGE NUMBER: OF

PROPOSED CONSTRUCTION SEQUENCING:

1. CONSTRUCT RCB CULVERT. MAINTAIN TRAFFIC ON EXISTING ROAD.
2. CONSTRUCT TEMPORARY MAINTENANCE ACCESS ROAD. REROUTE MAINTENANCE ACCESS ROAD OVER NEW CULVERT.
3. REMOVE EXISTING CULVERT. CONSTRUCT NEW RCB CULVERT.
4. INSTALL NEW INLET/OUTLET PIPE UNDER PROPOSED MAINTENANCE ROAD.
5. CONSTRUCT NEW MAINTENANCE ACCESS ROAD.
6. CONSTRUCT ROAD CONNECTION TO EXISTING ACCESS ROAD. ROUTE TRAFFIC TO NEW ROAD.
7. CONSTRUCT NEW RCB CONTROL STRUCTURE.
8. FINISH GRADING AROUND CONTROL STRUCTURE AND SOUTH BASIN

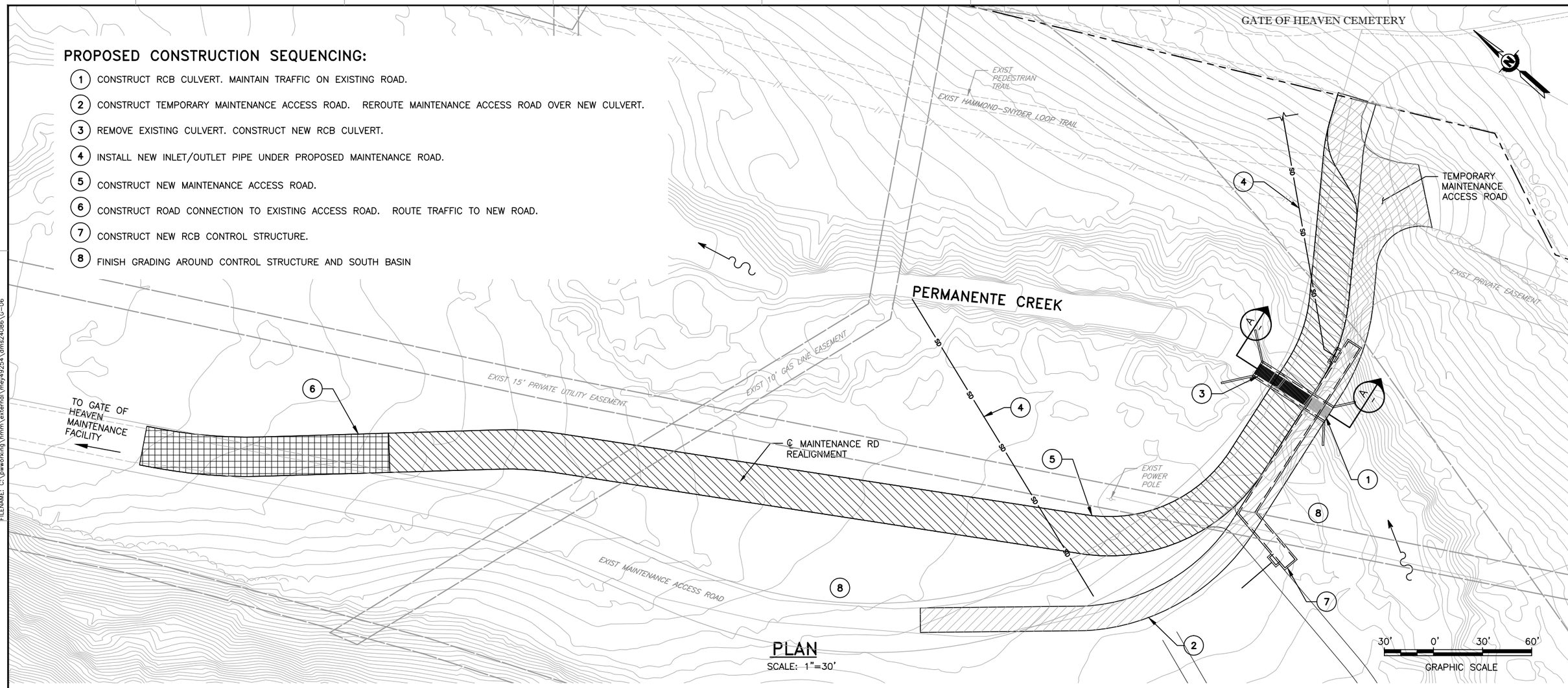

PLAN
SCALE: 1"=30'

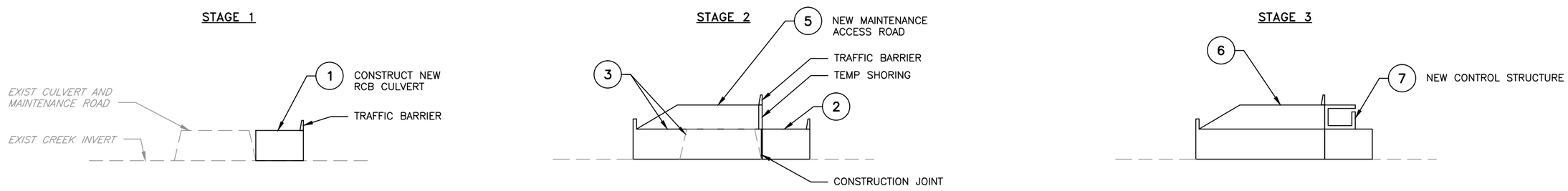

SECTION A/– PRIVATE MAINTENANCE ROAD AND CULVERT
CONSTRUCTION SEQUENCE
NTS

REDUCED HALF SIZE (11X17)

REV	DESCRIPTION	DATE	APPR.
A	60% REVIEW SUBMITTAL	04/12	J.S.

REFERENCE INFORMATION AND NOTES

Hatch Mott MacDonald

DATE 4-16-12
DESIGN Y LIAO
DRAWN K MEYER
CHECKED G RITTER

ENGINEERING CERTIFICATION
REGISTERED PROFESSIONAL ENGINEER TRACIE K SAKAKIHARA C37141 CIVIL STATE OF CALIFORNIA
PROJECT ENGINEER DATE

Santa Clara Valley Water District
ACCEPTED BY DISTRICT

PROJECT NAME AND SHEET DESCRIPTION:
PERMANENTE CREEK FLOOD PROTECTION PROJECT
RANCHO SAN ANTONIO
CONSTRUCTION SEQUENCE PLAN
CEMETERY MAINTENANCE ROAD REALIGNMENT

SCALE 1" = 30'
VERIFY SCALES 0 1"
BAR IS ONE INCH ON ORIGINAL DRAWING IF NOT ONE INCH ON THIS SHEET, ADJUST SCALES ACCORDINGLY

PROJECT NUMBER 26244001
SHEET CODE: G-6
PAGE NUMBER: OF

DOCUMENT NUMBER: XXXX-X-0000-0000000.00

USERNAME: BillShad Tue 08 Jul 2008 09:32am
FILENAME: C:\pwworking\hmm\external\mey49254\dms24086\G-06

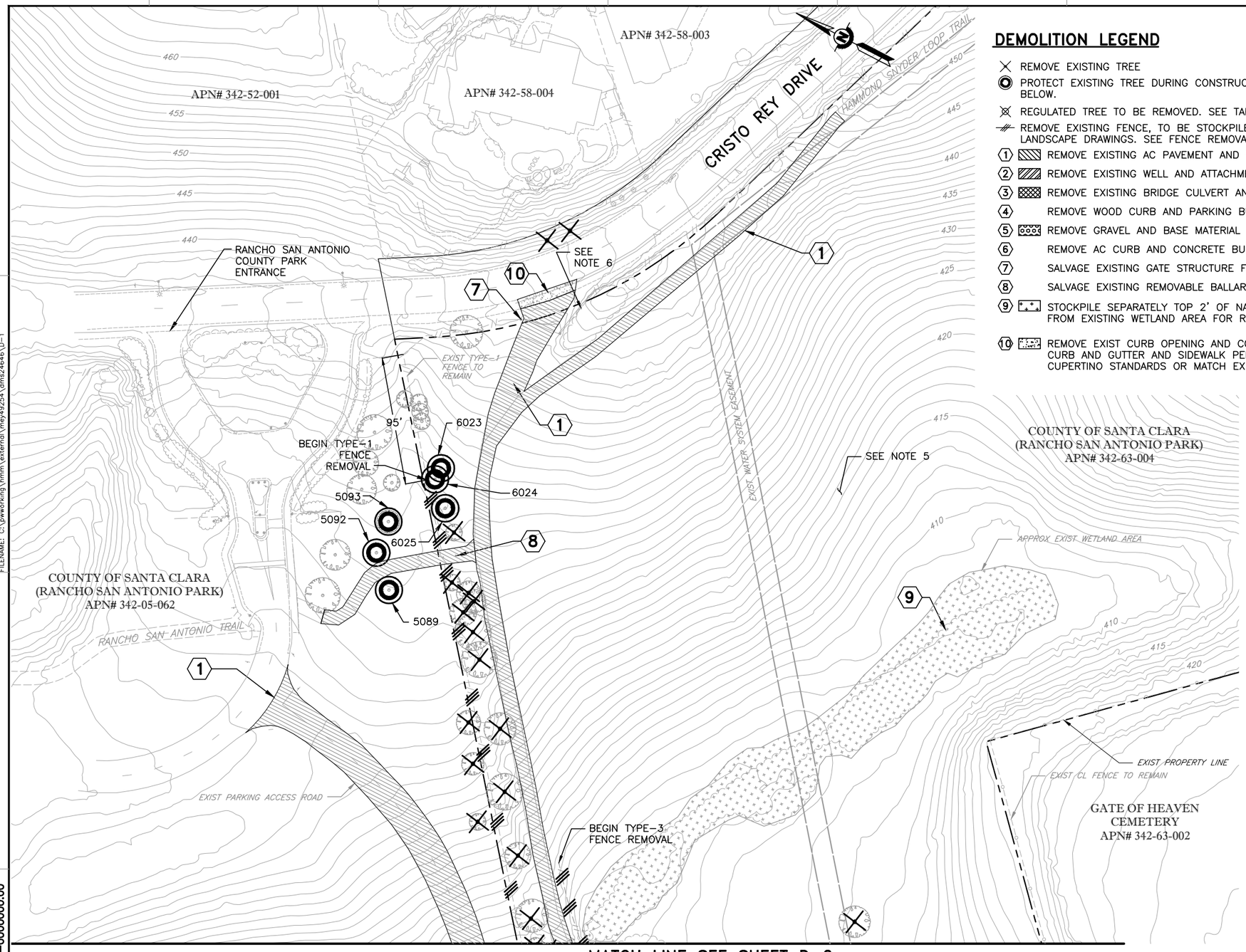

DEMOLITION LEGEND

- REMOVE EXISTING TREE
- PROTECT EXISTING TREE DURING CONSTRUCTION. SEE TABLE BELOW.
- REGULATED TREE TO BE REMOVED. SEE TABLE ON SHEET D-2.
- REMOVE EXISTING FENCE, TO BE STOCKPILED AND REUSED PER LANDSCAPE DRAWINGS. SEE FENCE REMOVAL SCHEDULE BELOW.
- (1) REMOVE EXISTING AC PAVEMENT AND BASE MATERIAL
- (2) REMOVE EXISTING WELL AND ATTACHMENTS
- (3) REMOVE EXISTING BRIDGE CULVERT AND WINGWALLS
- (4) REMOVE WOOD CURB AND PARKING BUMPERS
- (5) REMOVE GRAVEL AND BASE MATERIAL
- (6) REMOVE AC CURB AND CONCRETE BUMPERS
- (7) SALVAGE EXISTING GATE STRUCTURE FOR REUSE
- (8) SALVAGE EXISTING REMOVABLE BALLARDS FOR REUSE
- (9) STOCKPILE SEPARATELY TOP 2' OF NATIVE SOIL FROM EXISTING WETLAND AREA FOR REUSE.
- (10) REMOVE EXIST CURB OPENING AND CONSTRUCT NEW CURB AND GUTTER AND SIDEWALK PER CITY OF CUPERTINO STANDARDS OR MATCH EXISTING.

NOTES:

1. FOR GENERAL ABBREVIATIONS AND LEGEND SEE DRAWING G-4
2. SAWCUT EXISTING PAVEMENT AND/OR CONCRETE TO A NEAT LINE
3. TREES TO BE PROTECTED IN PLACE SHALL FOLLOW THE PROVISIONS OF THE SPECIFICATIONS.
4. SALVAGE ALL SIGNS IN EXISTING PARKING LOT AND ALONG EXISTING TRAILS TO BE REUSED PER LANDSCAPE DRAWINGS.
5. CONTRACTOR SHALL STOCKPILE THE ORGANIC LAYER OF TOPSOIL FROM BASIN EXCAVATION SEPARATELY TO BE USED FOR BASIN REVEGETATION. DEPTH OF TOPSOIL TO BE DETERMINED BASED ON FURTHER FIELD INVESTIGATIONS.
6. AFTER REMOVING GATE, REALIGN EXIST FENCE TO CLOSE GAP TO PROHIBIT VEHICULAR ACCESS.

TREE PROTECTION SCHEDULE

TREE ID NO	SPECIES COMMON NAME	TREE DIA. (INCHES)	COMMENTS
5008	COAST LIVE OAK	19	
5027	WHITE ALDER	14	
5029	MONTEREY PINE	53	TWO TRUNKS
5089	VALLEY OAK	3	
5092	VALLEY OAK	9	
5093	CALIFORNIA SYCAMORE	4	
6023	COAST LIVE OAK	5	
6024	COAST LIVE OAK	VARIES	TREE CLUSTER
6025	COAST LIVE OAK	11	

FENCE REMOVAL SCHEDULE

FENCE TYPE	DESCRIPTION	APPROX LENGTH	COMMENTS
TYPE-1	SPLIT RAIL FENCE ALONG EXISTING TRAIL	825'	STOCKPILE SEPARATELY FOR REUSE. LENGTH TO BE VERIFIED IN FIELD.
TYPE-2	SPLIT RAIL FENCE ALONG EQUESTRIAN PARKING	765'	STOCKPILE SEPARATELY FOR REUSE. LENGTH TO BE VERIFIED IN FIELD.
TYPE-3	SPLIT RAIL FENCE ALONG CREEK	430'	STOCKPILE SEPARATELY FOR REUSE. LENGTH TO BE VERIFIED IN FIELD.
TYPE-3	SPLIT RAIL FENCE ALONG EXISTING TRAIL	125'	STOCKPILE SEPARATELY FOR REUSE. LENGTH TO BE VERIFIED IN FIELD.

REDUCED HALF SIZE (11X17)

40' 0' 40' 80'
GRAPHIC SCALE

REV	DESCRIPTION	DATE	APPR.
A	30% REVIEW SUBMITTAL	11/11	J.S.
B	60% REVIEW SUBMITTAL	04/12	J.S.

REFERENCE INFORMATION AND NOTES

Hatch Mott MacDonald

DATE 4-16-12
DESIGN Y LIAO
DRAWN M WHITE
CHECKED G RITTER

ENGINEERING CERTIFICATION
REGISTERED PROFESSIONAL ENGINEER TRACIE K SAKAHIHARA C37141 CIVIL STATE OF CALIFORNIA
PROJECT ENGINEER DATE

Santa Clara Valley Water District
ACCEPTED BY DISTRICT

PROJECT NAME AND SHEET DESCRIPTION:
PERMANENTE CREEK FLOOD PROTECTION PROJECT
RANCHO SAN ANTONIO
EXISTING TOPO AND DEMOLITION PLAN

SCALE 1" = 40'
VERIFY SCALES 0 1"
BAR IS ONE INCH ON ORIGINAL DRAWING IF NOT ONE INCH ON THIS SHEET, ADJUST SCALES ACCORDINGLY

PROJECT NUMBER 26244001
SHEET CODE: D-1
PAGE NUMBER: OF

DOCUMENT NUMBER: XXXX-X-0000-0000000.00

USERNAME: BIISHad Tue 08 Jul 2008 09:32am
FILENAME: C:\pwworking\mrm\external\mey4925A\dms24646\D-1

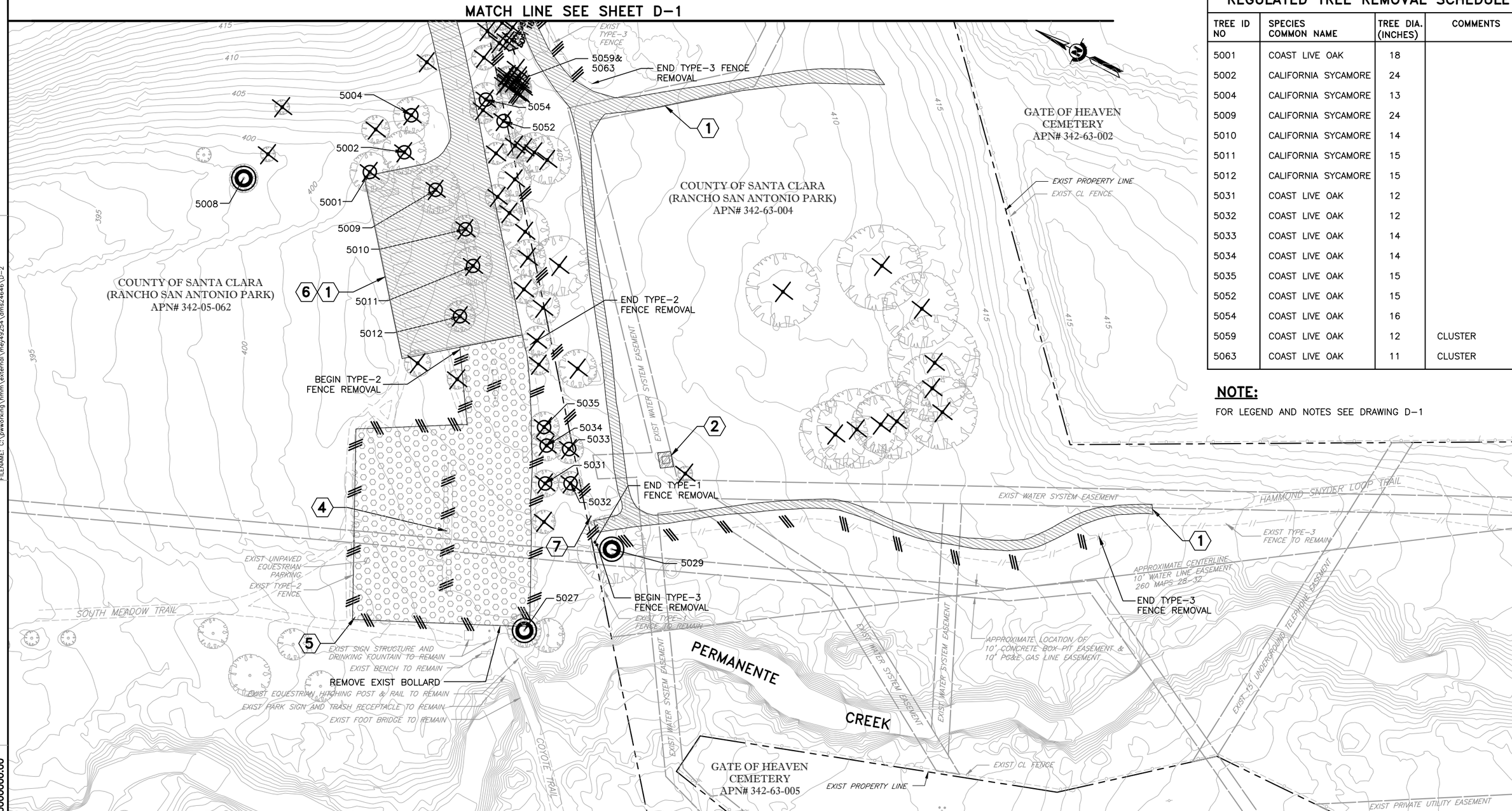

REGULATED TREE REMOVAL SCHEDULE

TREE ID NO	SPECIES COMMON NAME	TREE DIA. (INCHES)	COMMENTS
5001	COAST LIVE OAK	18	
5002	CALIFORNIA SYCAMORE	24	
5004	CALIFORNIA SYCAMORE	13	
5009	CALIFORNIA SYCAMORE	24	
5010	CALIFORNIA SYCAMORE	14	
5011	CALIFORNIA SYCAMORE	15	
5012	CALIFORNIA SYCAMORE	15	
5031	COAST LIVE OAK	12	
5032	COAST LIVE OAK	12	
5033	COAST LIVE OAK	14	
5034	COAST LIVE OAK	14	
5035	COAST LIVE OAK	15	
5052	COAST LIVE OAK	15	
5054	COAST LIVE OAK	16	
5059	COAST LIVE OAK	12	CLUSTER
5063	COAST LIVE OAK	11	CLUSTER

NOTE:

FOR LEGEND AND NOTES SEE DRAWING D-1

REDUCED HALF SIZE (11X17)

40' 0' 40' 80'
GRAPHIC SCALE

REV	DESCRIPTION	DATE	APPR.
A	30% REVIEW SUBMITTAL	11/11	J.S.
B	60% REVIEW SUBMITTAL	04/12	J.S.

REFERENCE INFORMATION AND NOTES

Hatch Mott MacDonald

DATE 4-16-12
DESIGN Y LIAO
DRAWN M WHITE
CHECKED G RITTER

ENGINEERING CERTIFICATION
REGISTERED PROFESSIONAL ENGINEER RACIE K SAKAHARA C37141 CIVIL STATE OF CALIFORNIA
PROJECT ENGINEER DATE

Santa Clara Valley Water District
ACCEPTED BY DISTRICT

PROJECT NAME AND SHEET DESCRIPTION:

PERMANENTE CREEK FLOOD PROTECTION PROJECT

RANCHO SAN ANTONIO EXISTING TOPO AND DEMOLITION PLAN

SCALE 1" = 40'
VERIFY SCALES 0 1"
BAR IS ONE INCH ON ORIGINAL DRAWING IF NOT ONE INCH ON THIS SHEET, ADJUST SCALES ACCORDINGLY

PROJECT NUMBER 26244001
SHEET CODE: D-2
PAGE NUMBER: OF

DOCUMENT NUMBER: XXXX-X-0000-0000000.00

USERNAME: BillShad Tue 08 Jul 2008 09:32am
FILENAME: C:\pwworking\mrm\external\mey49254\dms24646\D-2

NOTE:

1. FOR LEGEND AND NOTES SEE DRAWING D-1.
2. SEE DWG G-6 FOR CEMETERY MAINTENANCE ROAD CONSTRUCTION SEQUENCE.

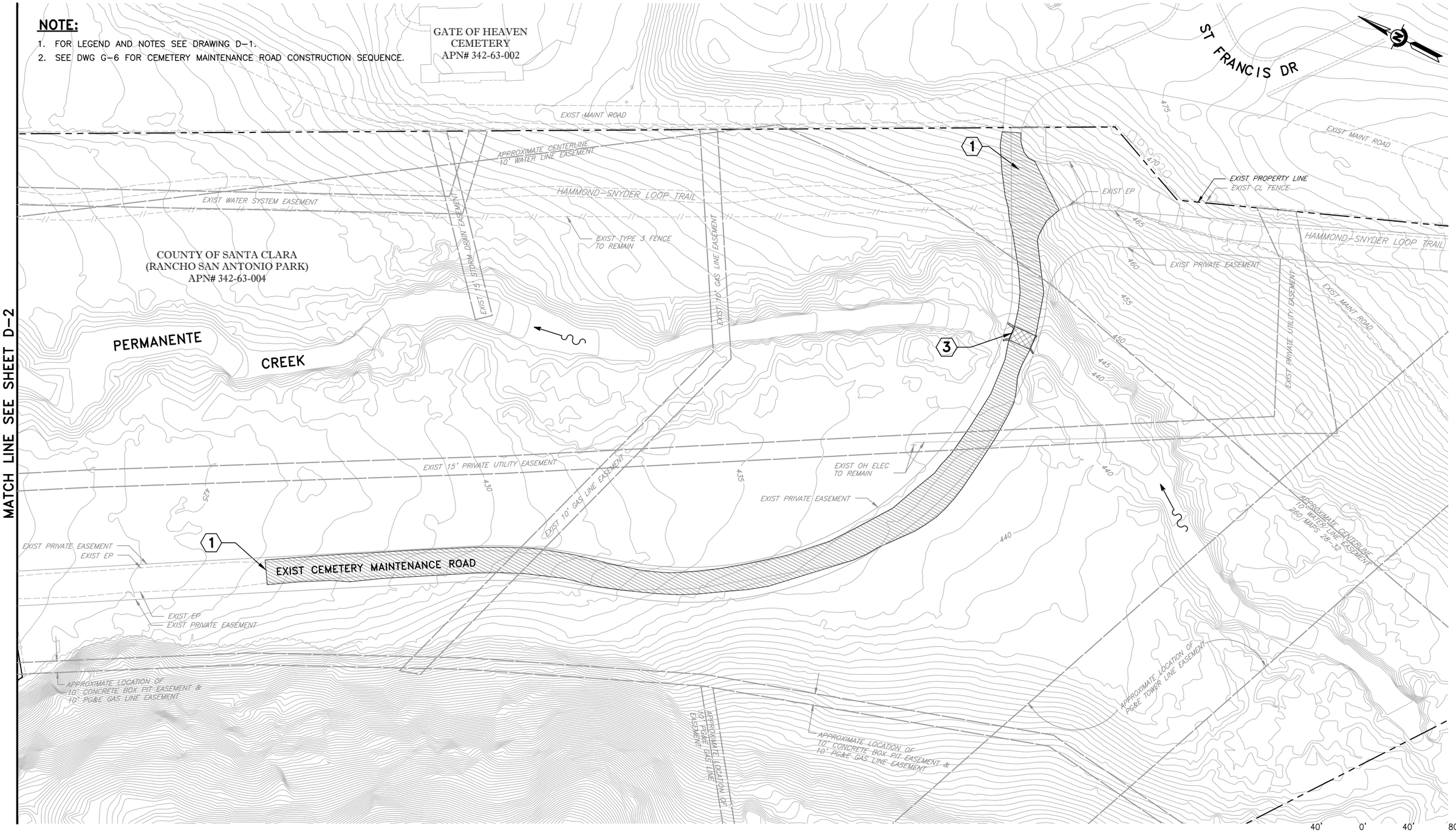

REDUCED HALF SIZE (11X17)

USERNAME: BillShad Tue 08 Jul 2008 09:32am
FILENAME: C:\pwworking\hmm\external\mey42254\dms24646\D-3

DOCUMENT NUMBER: XXXX-X-0000-0000000.00

REV	DESCRIPTION	DATE	APPR.
A	30% REVIEW SUBMITTAL	11/11	JS
B	60% REVIEW SUBMITTAL	4/12	JS

REFERENCE INFORMATION AND NOTES

Hatch Mott MacDonald

DATE	4-16-12
DESIGN	Y LIAO
DRAWN	K MEYER
CHECKED	G RITTER

ENGINEERING CERTIFICATION

REGISTERED PROFESSIONAL ENGINEER TRACIE K SAKAKIHARA C37141 CIVIL STATE OF CALIFORNIA

PROJECT ENGINEER DATE

Santa Clara Valley Water District

ACCEPTED BY DISTRICT

PROJECT NAME AND SHEET DESCRIPTION:

PERMANENTE CREEK FLOOD PROTECTION PROJECT

RANCHO SAN ANTONIO EXISTING TOPO AND DEMOLITION PLAN

SCALE: 1" = 40'

VERIFY SCALES: 0 — 1"

BAR IS ONE INCH ON ORIGINAL DRAWING IF NOT ONE INCH ON THIS SHEET, ADJUST SCALES ACCORDINGLY

PROJECT NUMBER: 26244001

SHEET CODE: D-3

PAGE NUMBER: OF

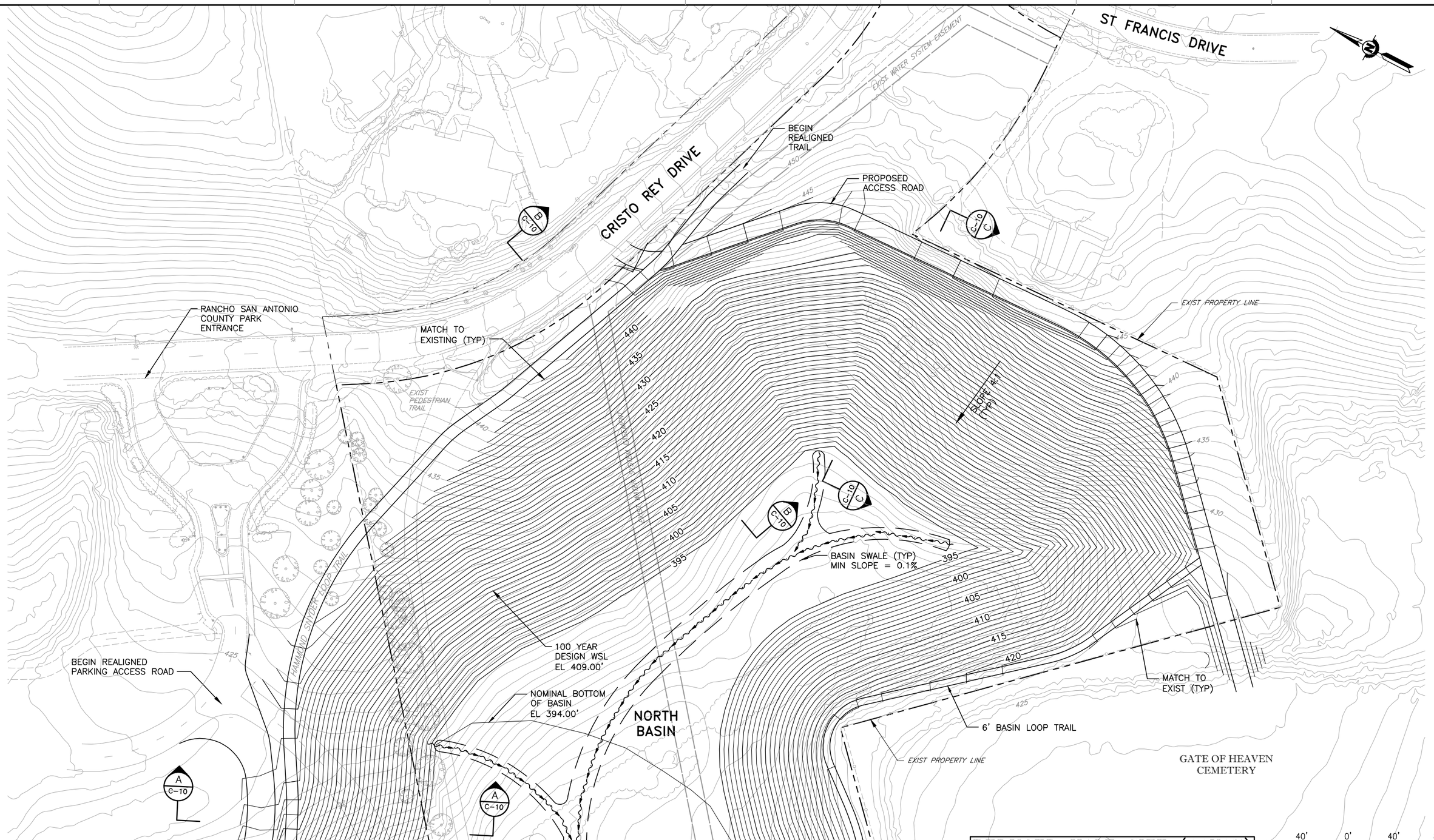

MATCH LINE SEE SHEET C-6

REDUCED HALF SIZE (11X17)

REV	DESCRIPTION	DATE	APPR.
A	30% REVIEW SUBMITTAL	11/11	J.S.
B	60% REVIEW SUBMITTAL	04/12	J.S.

REFERENCE INFORMATION AND NOTES

Hatch Mott MacDonald

DATE	ENGINEERING CERTIFICATION
4-16-12	REGISTERED PROFESSIONAL ENGINEER TAKAGI K SAKAKIHARA C37141 CIVIL STATE OF CALIFORNIA
DESIGN Y LIAO	
DRAWN K MEYER	
CHECKED G RITTER	PROJECT ENGINEER DATE

Santa Clara Valley Water District

ACCEPTED BY DISTRICT

PROJECT NAME AND SHEET DESCRIPTION:

PERMANENTE CREEK FLOOD PROTECTION PROJECT

RANCHO SAN ANTONIO NORTH BASIN GRADING PLAN

SCALE	PROJECT NUMBER
1" = 40'	26244001
VERIFY SCALES 0 1" BAR IS ONE INCH ON ORIGINAL DRAWING IF NOT ONE INCH ON THIS SHEET, ADJUST SCALES ACCORDINGLY	SHEET CODE: C-5 PAGE NUMBER: OF

DOCUMENT NUMBER: XXXX-X-0000-0000000.00

USERNAME: BillShad Tue 08 Jul 2008 09:32am
FILENAME: C:\pwworking\hmm\external\mey49254\dms24078\C-5

MATCH LINE SEE SHEET C-5

MATCH LINE SEE SHEET C-8

MATCH TO EXISTING (TYP)

REALIGNED PARKING ACCESS ROAD

SEPTIC SYSTEM AND DRAINFIELD (SEE DWG C-40)

PARKING AREA

EQUESTRIAN PARKING AREA

PROPOSED WELL LOCATION

24" DIA CMP (SEE DWG C-33)

NEW TRAIL CONNECTIONS

OUTFALL

LOW POINT EL 393.5'

INLET STRUCTURE

BASIN SWALE (TYP) MIN SLOPE = 0.1%

10' BASIN MAINTENANCE ACCESS RAMP

100 YEAR DESIGN WSL EL 409.00'

NORTH BASIN

NOMINAL BOTTOM OF BASIN EL 394.00'

IMPACT STILLING BASIN

SLOPE 4:1 (TYP)

6' BASIN LOOP TRAIL

EXIST CL FENCE

EXIST PROPERTY LINE

GATE OF HEAVEN CEMETERY

NEW 84" CMP SEE DWG C-30 AND C-31

EXIST WATER SYSTEM EASEMENT

END REALIGNED TRAIL

EXIST PEDESTRIAN TRAIL

APPROXIMATE CENTERLINE 10' WATER LINE EASEMENT 260 MAPS 28-32

APPROXIMATE LOCATION OF 10' CONCRETE BOX-PIT EASEMENT & 10' PG&E GAS LINE EASEMENT

EXIST 15' UNDERGROUND TELEPHONE EASEMENT

EXIST FOOT BRIDGE

PERMANENTE CREEK

EXIST PROPERTY LINE

EXIST PRIVATE UTILITY EASEMENT

REDUCED HALF SIZE (11X17)

40' 0' 40' 80'

GRAPHIC SCALE

USERNAME: BillShad Tue 08 Jul 2008 09:32am
FILENAME: C:\pwworking\mrm\external\mey49254\dms24078\C-6

DOCUMENT NUMBER: XXXX-X-0000-0000000.00

REV	DESCRIPTION	DATE	APPR.
A	30% REVIEW SUBMITTAL	11/11	J.S.
B	60% REVIEW SUBMITTAL	04/12	J.S.

REFERENCE INFORMATION AND NOTES

Hatch Mott MacDonald

DATE 4-16-12
DESIGN Y LIAO
DRAWN K MEYER
CHECKED G RITTER

ENGINEERING CERTIFICATION
REGISTERED PROFESSIONAL ENGINEER TRACIE K SAKAHIHARA C37141 CIVIL STATE OF CALIFORNIA
PROJECT ENGINEER DATE

Santa Clara Valley Water District

ACCEPTED BY DISTRICT

PROJECT NAME AND SHEET DESCRIPTION:

PERMANENTE CREEK FLOOD PROTECTION PROJECT

RANCHO SAN ANTONIO NORTH BASIN GRADING PLAN

SCALE 1" = 40'

VERIFY SCALES 0 1"
BAR IS ONE INCH ON ORIGINAL DRAWING IF NOT ONE INCH ON THIS SHEET, ADJUST SCALES ACCORDINGLY

PROJECT NUMBER 26244001

SHEET CODE: C-6

PAGE NUMBER: OF

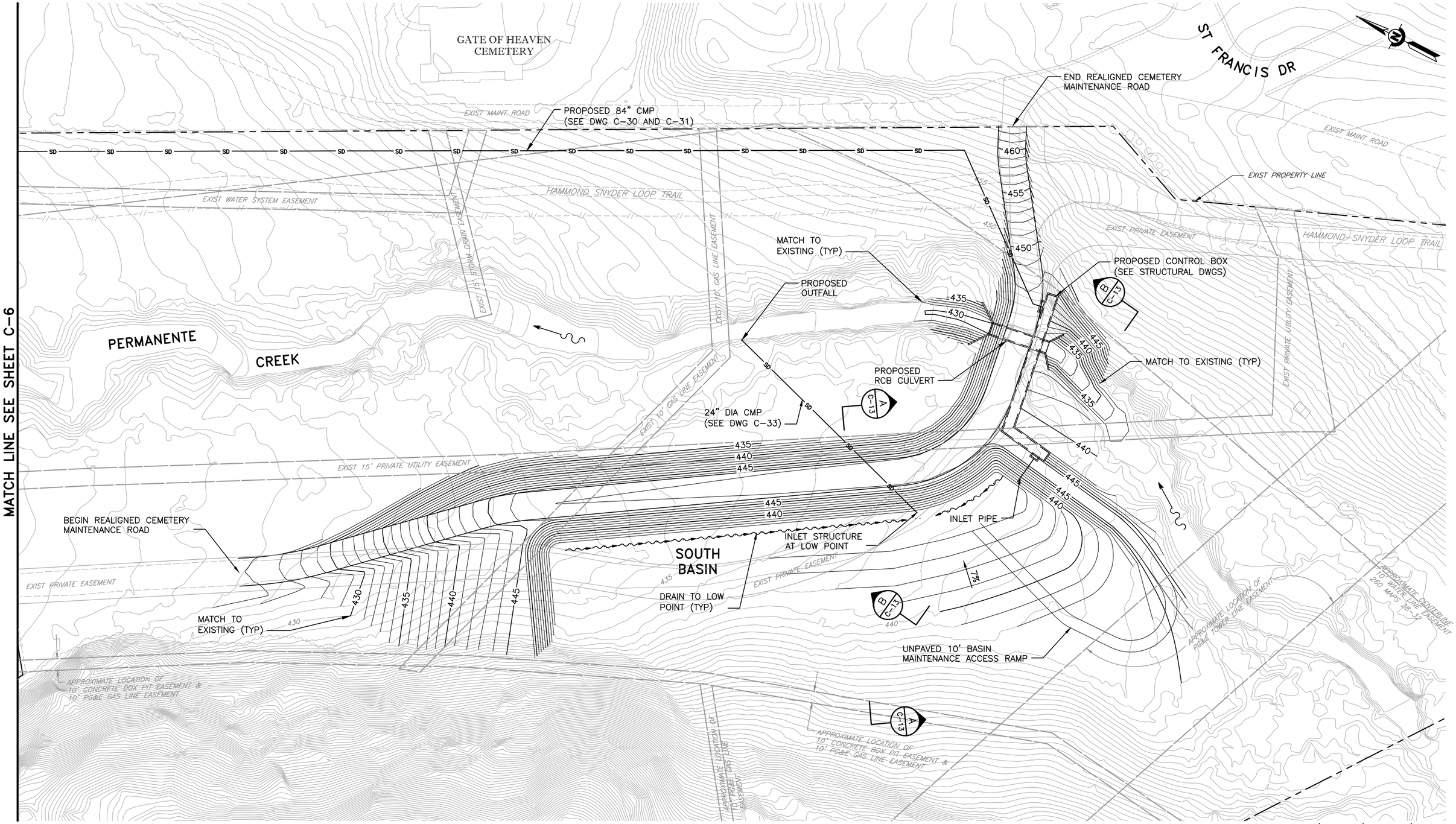

MATCH LINE SEE SHEET C-6

REDUCED HALF SIZE (11X17)

USERNAME: BRIShad Tue 08 Jul 2008 09:32am
FILENAME: C:\pwworking\hmm\external\mey49254\dms24078\C-8

DOCUMENT NUMBER: XXXX-X-0000-0000000.00

REV	DESCRIPTION	DATE	APPR.
A	30% REVIEW SUBMITTAL	11/11	J.S.
B	60% REVIEW SUBMITTAL	04/12	J.S.

REFERENCE INFORMATION AND NOTES

Hatch Mott MacDonald

DATE	4-16-12
DESIGN	Y LIAO
DRAWN	K MEYER
CHECKED	G RITTER

ENGINEERING CERTIFICATION

REGISTERED PROFESSIONAL ENGINEER TRACIE K SAKAKIHARA C37141 CIVIL STATE OF CALIFORNIA

PROJECT ENGINEER DATE

Santa Clara Valley Water District

ACCEPTED BY DISTRICT

PROJECT NAME AND SHEET DESCRIPTION:

PERMANENTE CREEK FLOOD PROTECTION PROJECT

RANCHO SAN ANTONIO
SOUTH BASIN
GRADING PLAN

SCALE: 1" = 40'

VERIFY SCALES: 0 1"
BAR IS ONE INCH ON ORIGINAL DRAWING IF NOT ONE INCH ON THIS SHEET, ADJUST SCALES ACCORDINGLY

PROJECT NUMBER: 26244001

SHEET CODE: C-8

PAGE NUMBER: OF

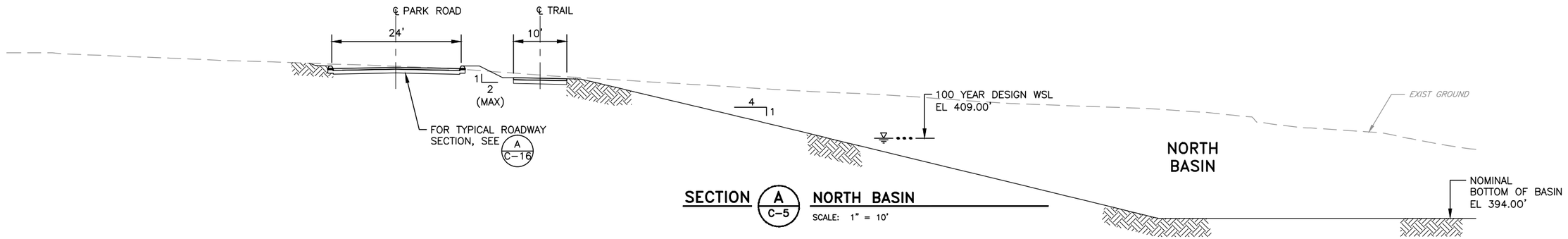

SECTION A C-5 NORTH BASIN

SCALE: 1" = 10'

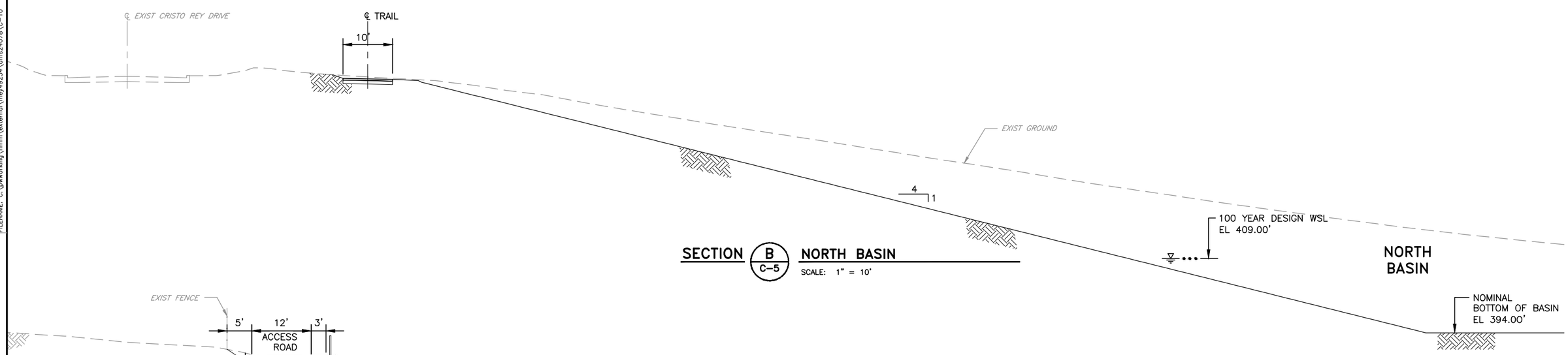

SECTION B C-5 NORTH BASIN

SCALE: 1" = 10'

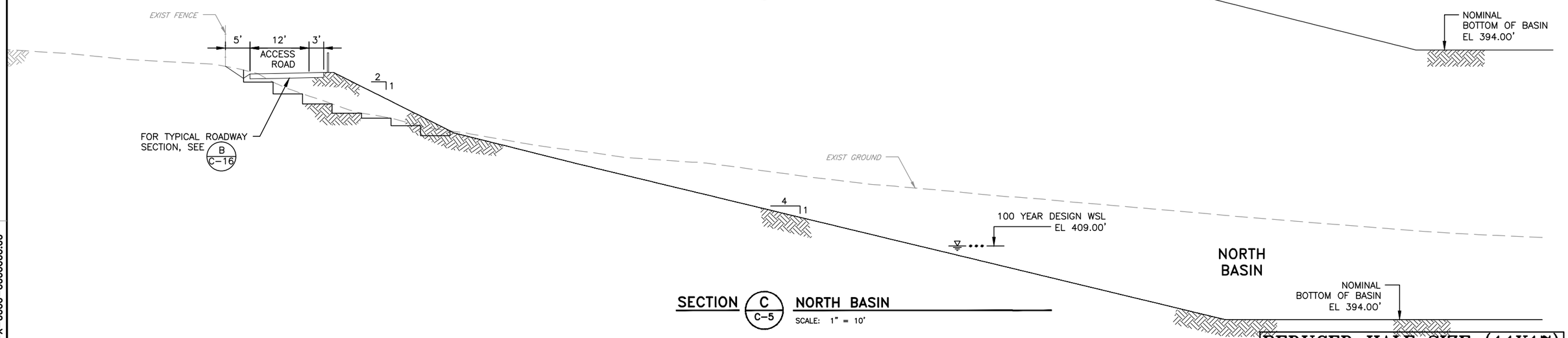

SECTION C C-5 NORTH BASIN

SCALE: 1" = 10'

REDUCED HALF SIZE (11X17)

REV	DESCRIPTION	DATE	APPR.
A	30% REVIEW SUBMITTAL	11/11	J.S.
B	60% REVIEW SUBMITTAL	04/12	J.S.

REFERENCE INFORMATION AND NOTES

Hatch Mott MacDonald

DATE 4-16-12

DESIGN Y LIAO

DRAWN K MEYER

CHECKED G RITTER

ENGINEERING CERTIFICATION

REGISTERED PROFESSIONAL ENGINEER TRACIE K SAKAKIHARA C37141 CIVIL STATE OF CALIFORNIA

PROJECT ENGINEER DATE

Santa Clara Valley Water District

ACCEPTED BY DISTRICT

PROJECT NAME AND SHEET DESCRIPTION:

PERMANENTE CREEK FLOOD PROTECTION PROJECT

RANCHO SAN ANTONIO
NORTH BASIN
SECTIONS

SCALE 1" = 10'

VERIFY SCALES 0 1"

BAR IS ONE INCH ON ORIGINAL DRAWING IF NOT ONE INCH ON THIS SHEET, ADJUST SCALES ACCORDINGLY

PROJECT NUMBER 26244001

SHEET CODE: C-10

PAGE NUMBER: OF

DOCUMENT NUMBER: XXXX-X-0000-0000000.00

USERNAME: BRISHad Tue 08 Jul 2008 09:32am
FILENAME: C:\pwworking\hmm\external\mey4925A\dms24078\C-10

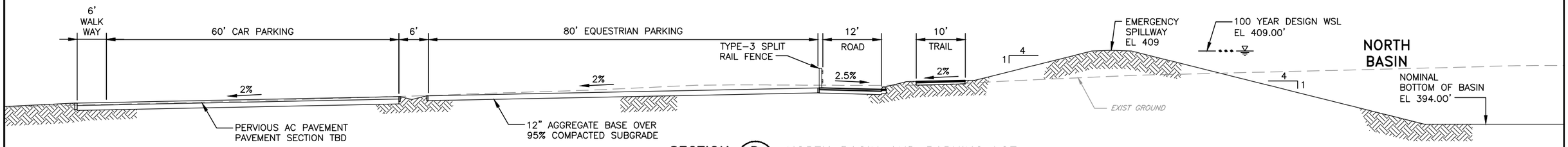

SECTION D C-6 NORTH BASIN AND PARKING LOT

SCALE: 1" = 10'

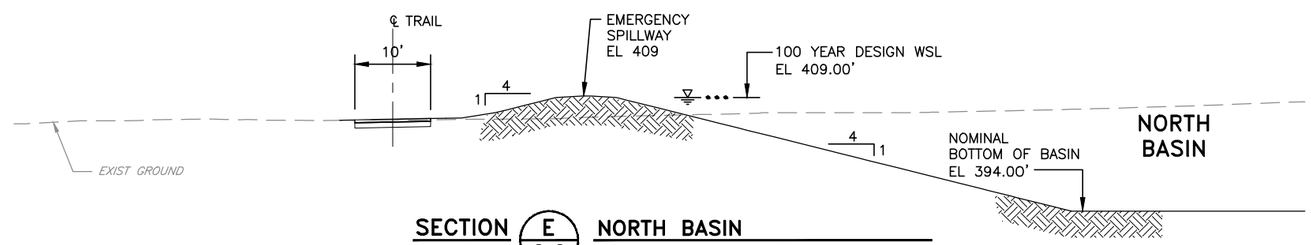

SECTION E C-6 NORTH BASIN

SCALE: 1" = 10'

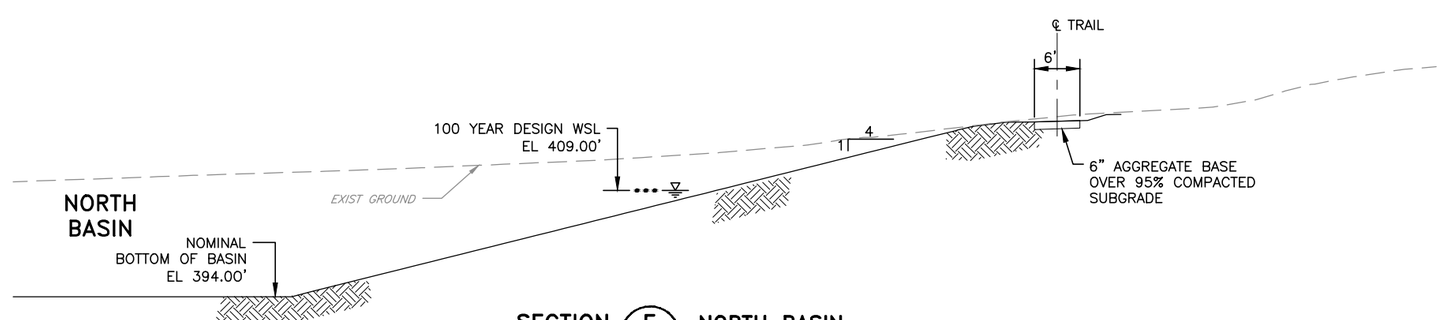

SECTION F C-6 NORTH BASIN

SCALE: 1" = 10'

REDUCED HALF SIZE (11X17)

REV	DESCRIPTION	DATE	APPR.
A	30% REVIEW SUBMITTAL	11/11	J.S.
B	60% REVIEW SUBMITTAL	04/12	J.S.

REFERENCE INFORMATION AND NOTES

Hatch Mott MacDonald

DATE 4-16-12

DESIGN Y LIAO

DRAWN K MEYER

CHECKED G RITTER

ENGINEERING CERTIFICATION

REGISTERED PROFESSIONAL ENGINEER TRACIE K SAKAKIHARA C37141 CIVIL STATE OF CALIFORNIA

PROJECT ENGINEER DATE

Santa Clara Valley Water District

ACCEPTED BY DISTRICT

PROJECT NAME AND SHEET DESCRIPTION:

PERMANENTE CREEK FLOOD PROTECTION PROJECT

RANCHO SAN ANTONIO
NORTH BASIN
SECTIONS

SCALE 1" = 10'

VERIFY SCALES 0 1"

BAR IS ONE INCH ON ORIGINAL DRAWING IF NOT ONE INCH ON THIS SHEET, ADJUST SCALES ACCORDINGLY

PROJECT NUMBER 26244001

SHEET CODE: C-11

PAGE NUMBER: OF

DOCUMENT NUMBER: XXXX-X-0000-0000000.00

USERNAME: BillShad Tue 08 Jul 2008 09:32am
FILENAME: C:\pwworking\hmm\external\mey4925A\dms24078\C-11

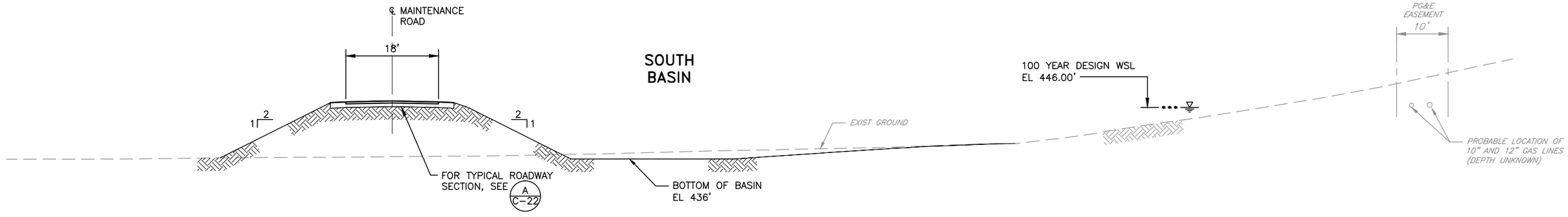

SECTION A C-8 SOUTH BASIN

SCALE: 1" = 10'

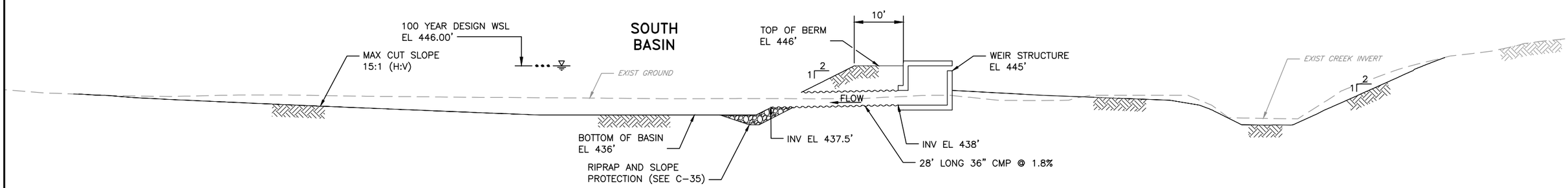

SECTION B C-8 SOUTH BASIN

SCALE: 1" = 10'

REDUCED HALF SIZE (11X17)

REV	DESCRIPTION	DATE	APPR.
A	30% REVIEW SUBMITTAL	11/11	J.S.
B	60% REVIEW SUBMITTAL	04/12	J.S.

REFERENCE INFORMATION AND NOTES

Hatch Mott MacDonald

DATE 4-16-12
DESIGN Y LIAO
DRAWN K MEYER
CHECKED G RITTER

ENGINEERING CERTIFICATION
REGISTERED PROFESSIONAL ENGINEER GRACIE K SAKAKIHARA C37141 CIVIL STATE OF CALIFORNIA
PROJECT ENGINEER DATE

Santa Clara Valley Water District

ACCEPTED BY DISTRICT

PROJECT NAME AND SHEET DESCRIPTION:

PERMANENTE CREEK FLOOD PROTECTION PROJECT

RANCHO SAN ANTONIO
SOUTH BASIN
SECTIONS

SCALE 1" = 10'
VERIFY SCALES 0 1"
BAR IS ONE INCH ON ORIGINAL DRAWING IF NOT ONE INCH ON THIS SHEET, ADJUST SCALES ACCORDINGLY

PROJECT NUMBER 26244001
SHEET CODE: C-13
PAGE NUMBER: OF

DOCUMENT NUMBER: XXXX-X-0000-0000000.00

USERNAME: BillShad Tue 08 Jul 2008 09:32am
FILENAME: C:\pwworking\hmm\external\mey4925A\dms24078\C-13

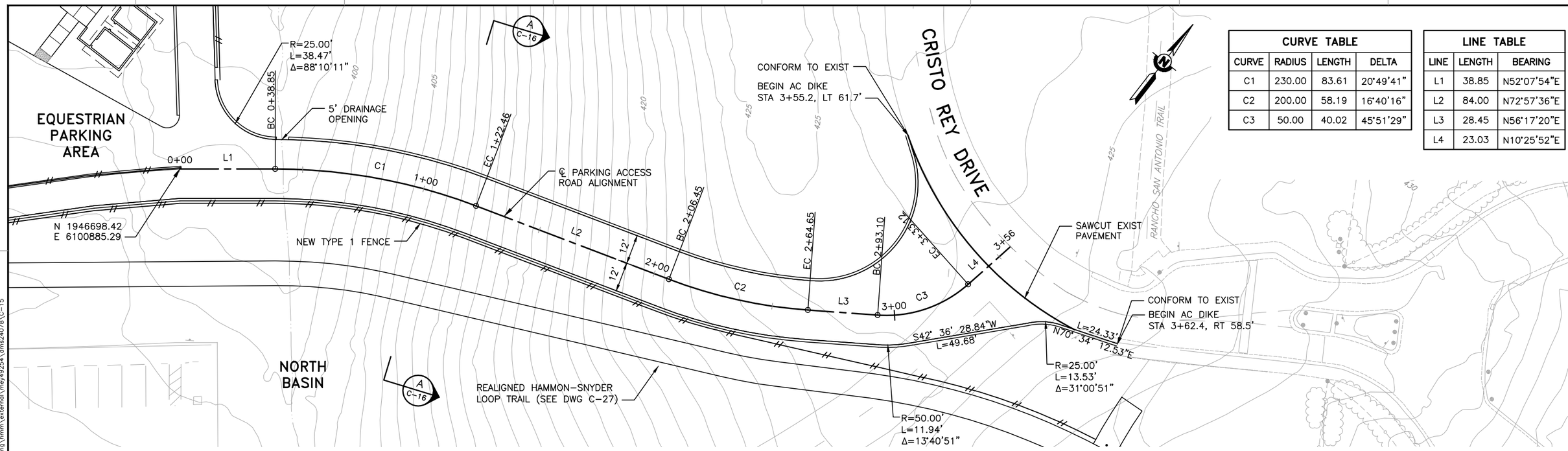

CURVE TABLE			
CURVE	RADIUS	LENGTH	DELTA
C1	230.00	83.61	20°49'41"
C2	200.00	58.19	16°40'16"
C3	50.00	40.02	45°51'29"

LINE TABLE		
LINE	LENGTH	BEARING
L1	38.85	N52°07'54"E
L2	84.00	N72°57'36"E
L3	28.45	N56°17'20"E
L4	23.03	N10°25'52"E

PLAN

SCALE: 1"=20'

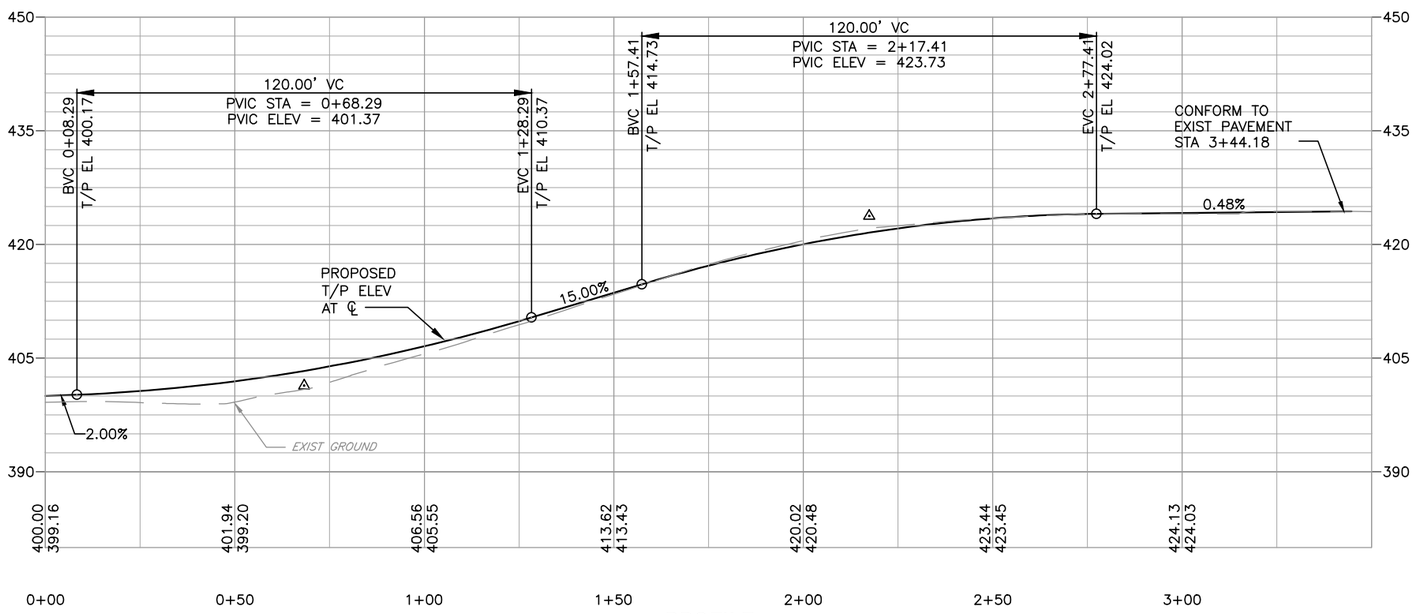

PROFILE

SCALE: 1"=20' HORIZ
1"=10' VERT

REDUCED HALF SIZE (11X17)

REV	DESCRIPTION	DATE	APPR.
A	30% REVIEW SUBMITTAL	11/11	J.S.
B	60% REVIEW SUBMITTAL	04/12	J.S.

REFERENCE INFORMATION AND NOTES

Hatch Mott MacDonald

DATE	4-16-12
DESIGN	Y LIAO
DRAWN	M WHITE
CHECKED	G RITTER

ENGINEERING CERTIFICATION

REGISTERED PROFESSIONAL ENGINEER TRACIE K. SAKAKIHARA C37141 CIVIL STATE OF CALIFORNIA

PROJECT ENGINEER DATE

Santa Clara Valley Water District

ACCEPTED BY DISTRICT

PROJECT NAME AND SHEET DESCRIPTION:

PERMANENTE CREEK FLOOD PROTECTION PROJECT

RANCHO SAN ANTONIO
PARKING ACCESS ROAD REALIGNMENT
PLAN AND PROFILE

SCALE: 1" = 20'

VERIFY SCALES: 0 — 1"
BAR IS ONE INCH ON ORIGINAL DRAWING IF NOT ONE INCH ON THIS SHEET, ADJUST SCALES ACCORDINGLY

PROJECT NUMBER: 26244001

SHEET CODE: C-15

PAGE NUMBER: OF

DOCUMENT NUMBER: XXXX-X-0000-0000000.00

USERNAME: BillShad Tue 08 Jul 2008 09:32am
FILENAME: C:\pwworking\mrm\external\mey4925A\dms24078\C-15

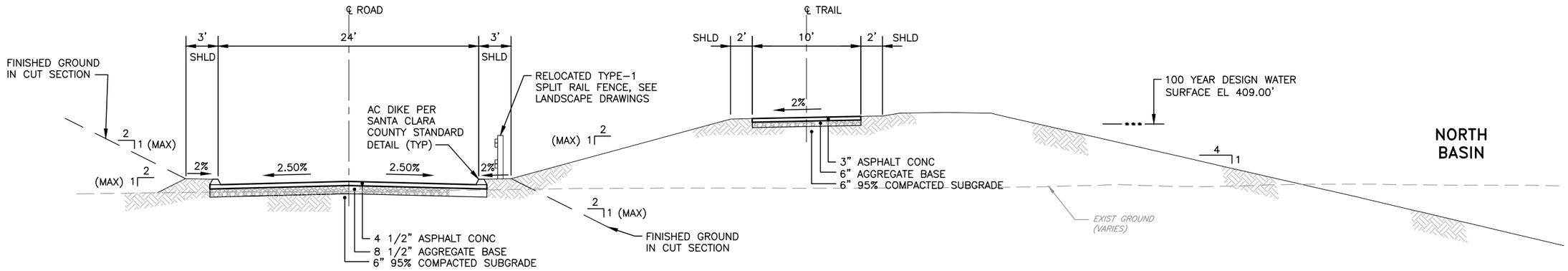

TYPICAL SECTION A / C-15 REALIGNED PARKING ACCESS ROAD & HAMMOND SNYDER LOOP TRAIL

SCALE: 1" = 5'

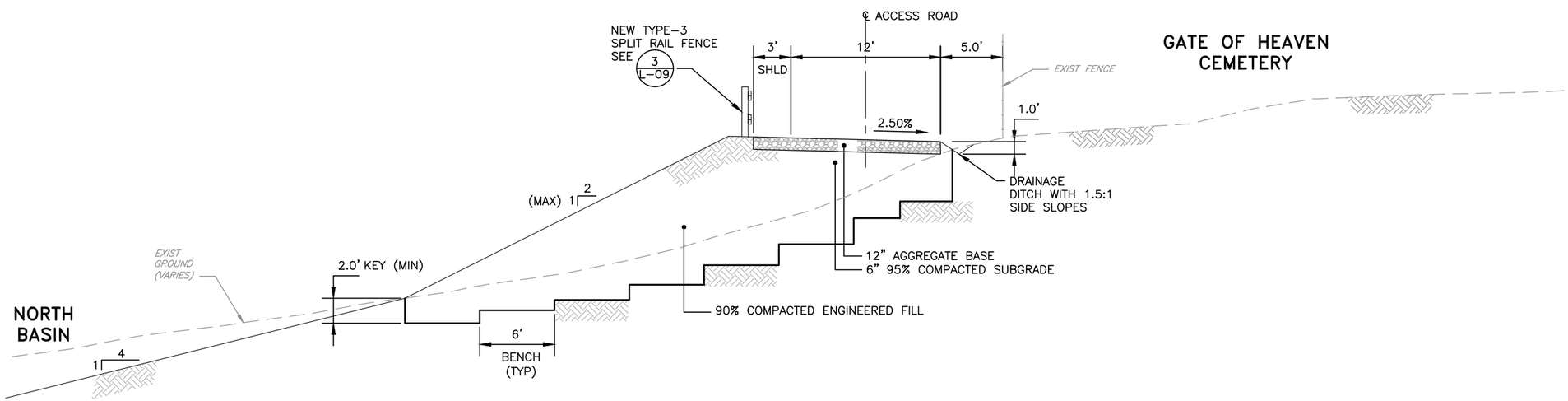

TYPICAL SECTION B / C-24 CEMETERY ACCESS ROAD

SCALE: 1" = 5'

REDUCED HALF SIZE (11X17)

REV	DESCRIPTION	DATE	APPR.
A	30% REVIEW SUBMITTAL	11/11	J.S.
B	60% REVIEW SUBMITTAL	04/12	J.S.

REFERENCE INFORMATION AND NOTES

Hatch Mott MacDonald

DATE 4-16-12
DESIGN Y LIAO
DRAWN K MEYER
CHECKED G RITTER

ENGINEERING CERTIFICATION
REGISTERED PROFESSIONAL ENGINEER TRACIE K SAKAKIHARA C37141 CIVIL STATE OF CALIFORNIA
PROJECT ENGINEER DATE

Santa Clara Valley Water District

ACCEPTED BY DISTRICT

PROJECT NAME AND SHEET DESCRIPTION:

PERMANENTE CREEK FLOOD PROTECTION PROJECT

RANCHO SAN ANTONIO
TYPICAL ROADWAY
SECTIONS

SCALE 1" = 5'
VERIFY SCALES 0 1"
BAR IS ONE INCH ON ORIGINAL DRAWING IF NOT ONE INCH ON THIS SHEET, ADJUST SCALES ACCORDINGLY

PROJECT NUMBER 26244001
SHEET CODE: C-16
PAGE NUMBER: OF

DOCUMENT NUMBER: XXXX-X-0000-0000000.00

USERNAME: BillShad Tue 08 Jul 2008 09:32am
FILENAME: C:\pwworking\mrm\external\mey4925\dms24078\C-16

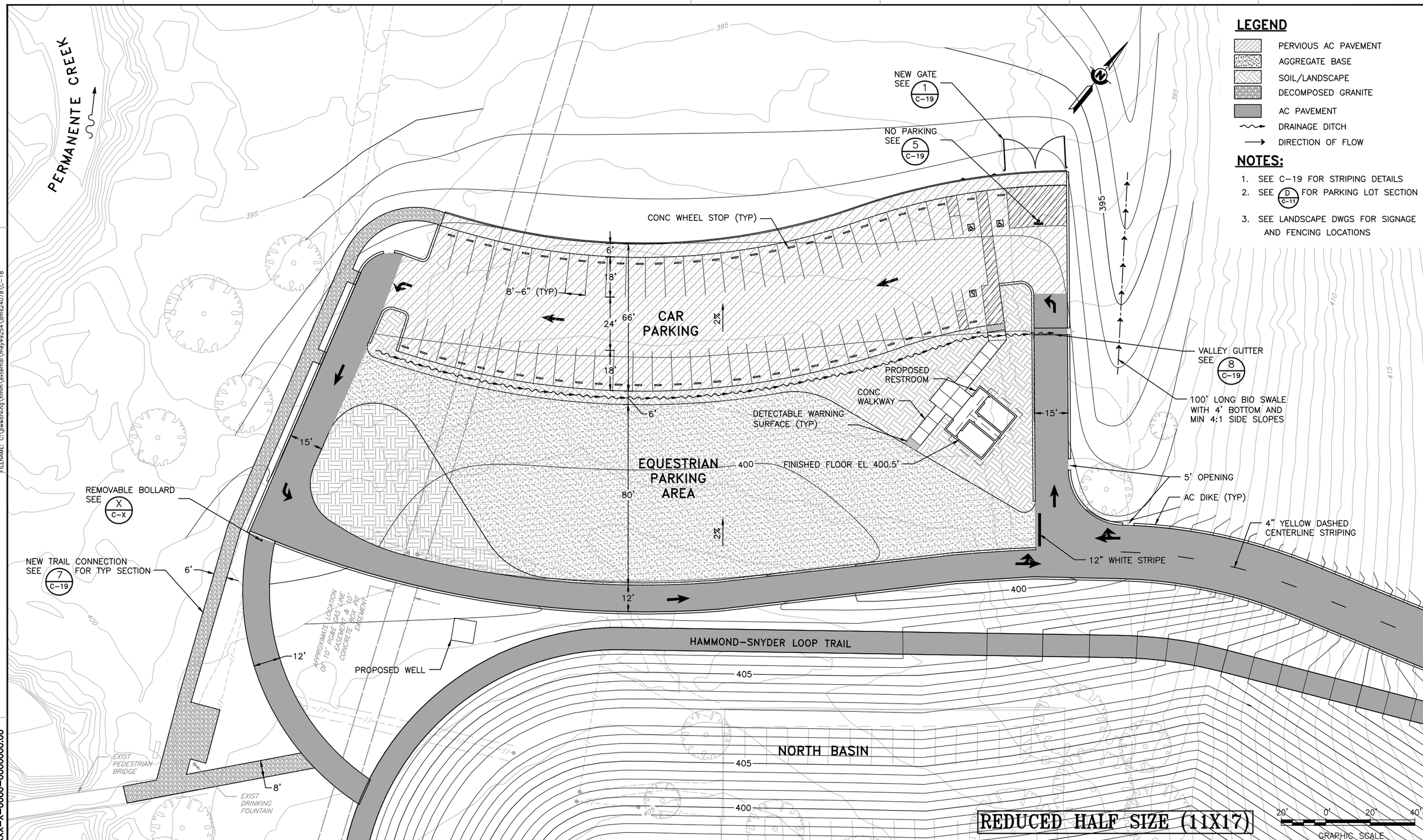

USERNAME: BillShad Tue 08 Jul 2008 09:32am
FILENAME: C:\pwworking\mrm\external\mey49254\dms24078\C-18

DOCUMENT NUMBER: XXXX-X-0000-0000000.00

REV	DESCRIPTION	DATE	APPR.
A	60% REVIEW SUBMITTAL	04/12	J.S.

REFERENCE INFORMATION AND NOTES

Hatch Mott MacDonald

DATE
4-16-12
DESIGN
Y LIAO
DRAWN
K MEYER
CHECKED
G RITTER

ENGINEERING CERTIFICATION

REGISTERED PROFESSIONAL ENGINEER RAGIE K. SAKAKINI-RA C37141 CIVIL STATE OF CALIFORNIA

PROJECT ENGINEER DATE

Santa Clara Valley Water District

ACCEPTED BY DISTRICT

PROJECT NAME AND SHEET DESCRIPTION:

PERMANENTE CREEK FLOOD PROTECTION PROJECT

RANCHO SAN ANTONIO PARKING LOT PAVING AND DRAINAGE PLAN

SCALE: 1" = 20'

VERIFY SCALES: 0 1"
BAR IS ONE INCH ON ORIGINAL DRAWING IF NOT ONE INCH ON THIS SHEET, ADJUST SCALES ACCORDINGLY

PROJECT NUMBER: 26244001

SHEET CODE: C-18

PAGE NUMBER: OF

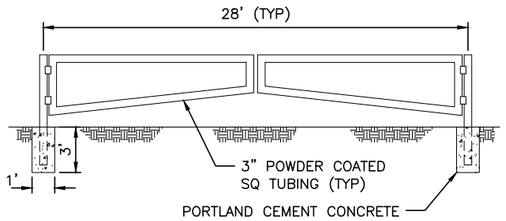

NOTE: GATE MANUFACTURER TO PROVIDE SPECS AND DETAILED DRAWINGS TO BE APPROVED BY COUNTY

DETAIL 1 / C-18 — TYPICAL LOCKING GATE

SCALE: NTS

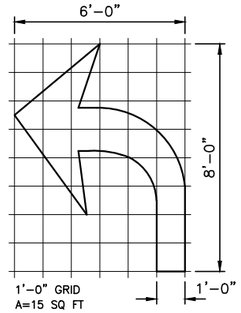

NOTE: FOR TYPE IV (R) ARROW USE MIRROR IMAGE (SEE CALTRANS STANDARD PLAN A24A)

DETAIL 2 / C-18 — TYPE IV (L) ARROW

SCALE: 1"=3/8"

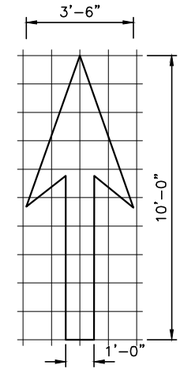

1'-0" GRID
A=14 SQ FT
(SEE CALTRANS STANDARD PLAN A24A)

DETAIL 3 / C-18 — TYPE I 10'-0" ARROW

SCALE: 1"=3/8"

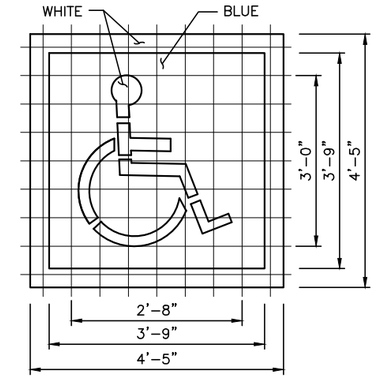

6" GRID
A (WHITE) = 9 SQ FT
A (BLUE) = 14 SQ FT
(SEE CALTRANS STANDARD PLAN A24C)

DETAIL 4 / C-18 — ACCESSIBILITY MARKING

SCALE: 1"=3/4"

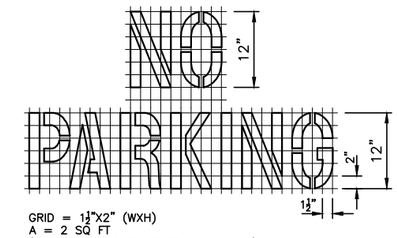

GRID = 1½"X2" (WXH)
A = 2 SQ FT
(SEE CALTRANS STANDARD PLAN A24E)

DETAIL 5 / C-18 — NO PARKING LEGEND

SCALE: 1"=1"

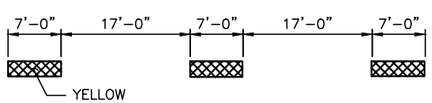

(SEE CALTRANS STANDARD PLAN A20A)

DETAIL 6 / C-18 — 4" YELLOW CENTERLINE

SCALE: NTS

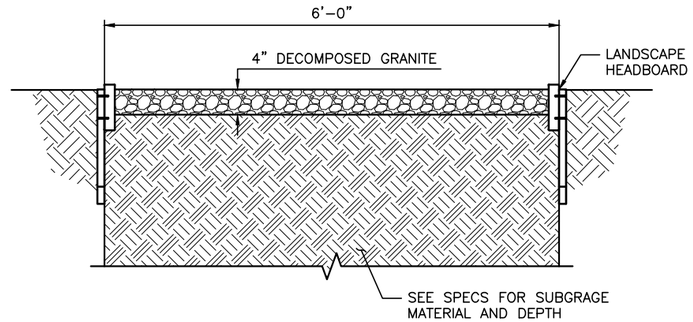

DETAIL 7 / C-18 — TRAIL CONNECTION

SCALE: 1"=1'

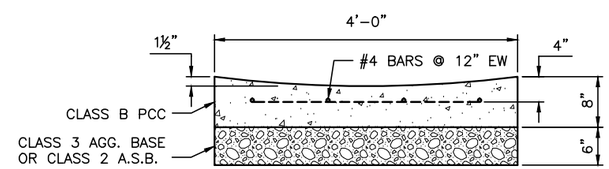

(SEE SANTA CLARA COUNTY STANDARD DETAIL B11)

DETAIL 8 / C-18 — CONCRETE VALLEY GUTTER

SCALE: 1"=1'

REDUCED HALF SIZE (11X17)

REV	DESCRIPTION	DATE	APPR.
A	60% REVIEW SUBMITTAL	04/12	J.S.

REFERENCE INFORMATION AND NOTES

Hatch Mott MacDonald

DATE	4-16-12
DESIGN	–
DRAWN	K MEYER
CHECKED	G RITTER

ENGINEERING CERTIFICATION

REGISTERED PROFESSIONAL ENGINEER — TRACIE K. SAKAKIHARA — C37141 — CIVIL — STATE OF CALIFORNIA

PROJECT ENGINEER DATE

Santa Clara Valley Water District

ACCEPTED BY DISTRICT

PROJECT NAME AND SHEET DESCRIPTION:

PERMANENTE CREEK FLOOD PROTECTION PROJECT

RANCHO SAN ANTONIO
PARKING LOT
TYPICAL SECTIONS AND DETAILS

SCALE: AS SHOWN

VERIFY SCALES: 0 — 1"
BAR IS ONE INCH ON ORIGINAL DRAWING IF NOT ONE INCH ON THIS SHEET, ADJUST SCALES ACCORDINGLY

PROJECT NUMBER: 26244001

SHEET CODE: C-19

PAGE NUMBER: OF

DOCUMENT NUMBER: XXXX-X-0000-0000000.00

USERNAME: BillShad Tue 08 Jul 2008 09:32am
FILENAME: C:\pwworking\mrm\external\mey49254\dms24078\C-19

CURVE TABLE			
CURVE	RADIUS	LENGTH	DELTA
C1	300.00	65.82	12°34'12"
C2	200.00	36.62	10°29'28"
C3	100.00	115.59	66°13'34"
C4	100.00	47.10	26°59'14"
C5	120.00	22.81	10°53'26"

LINE TABLE		
LINE	LENGTH	BEARING
L1	7.88	S30°39'11"E
L2	143.84	S43°13'23"E
L3	325.01	S32°43'54"E
L4	64.95	N81°02'32"E
L5	85.73	N54°03'18"E
L6	15.52	N64°56'44"E

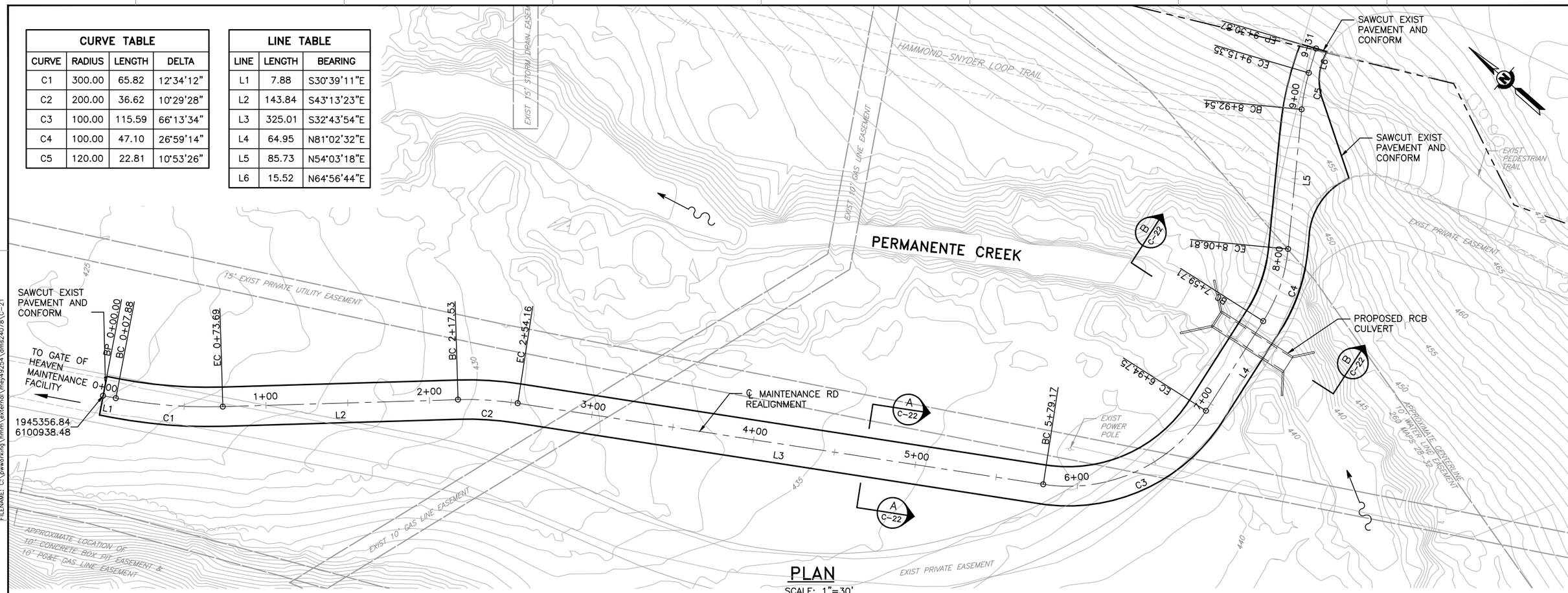

PLAN

SCALE: 1"=30'

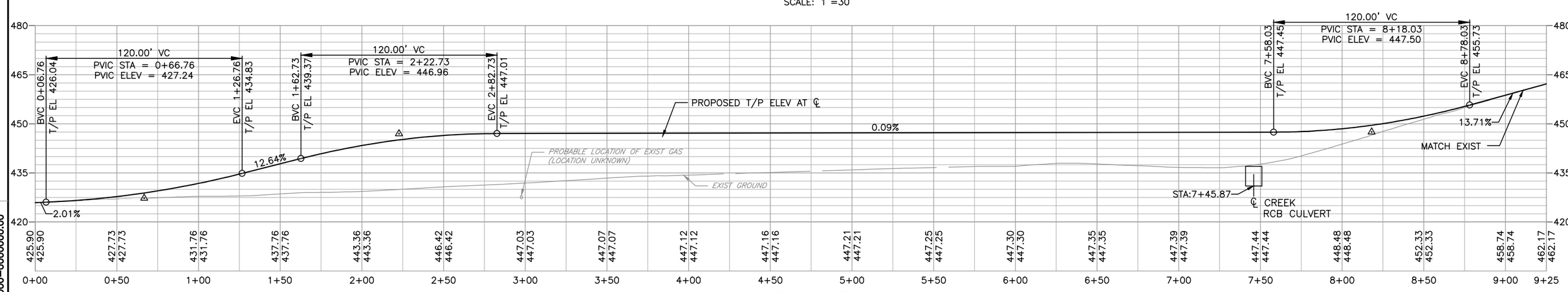

PROFILE

SCALE: 1"=30' HORIZ
1"=15' VERT

REDUCED HALF SIZE (11X17)

REV	DESCRIPTION	DATE	APPR.
A	30% REVIEW SUBMITTAL	11/11	J.S.
B	60% REVIEW SUBMITTAL	04/12	J.S.

REFERENCE INFORMATION AND NOTES

Hatch Mott MacDonald

DATE 4-16-12
DESIGN Y LIAO
DRAWN K MEYER
CHECKED G RITTER

ENGINEERING CERTIFICATION
REGISTERED PROFESSIONAL ENGINEER TRACIE K SAKAHIHARA C37141 CIVIL STATE OF CALIFORNIA
PROJECT ENGINEER DATE

Santa Clara Valley Water District
ACCEPTED BY DISTRICT

PROJECT NAME AND SHEET DESCRIPTION:

PERMANENTE CREEK FLOOD PROTECTION PROJECT

RANCHO SAN ANTONIO
CEMETERY MAINTENANCE ROAD REALIGNMENT
PLAN AND PROFILE

SCALE 1" = 30'
VERIFY SCALES 0 1"
BAR IS ONE INCH ON ORIGINAL DRAWING IF NOT ONE INCH ON THIS SHEET, ADJUST SCALES ACCORDINGLY

PROJECT NUMBER 26244001
SHEET CODE: C-21
PAGE NUMBER: OF

DOCUMENT NUMBER: XXXX-X-0000-0000000.00

USERNAME: BillShad Tue 08 Jul 2008 09:32am
FILENAME: C:\pwworking\hmm\external\mey4925A\dms24078\C-21

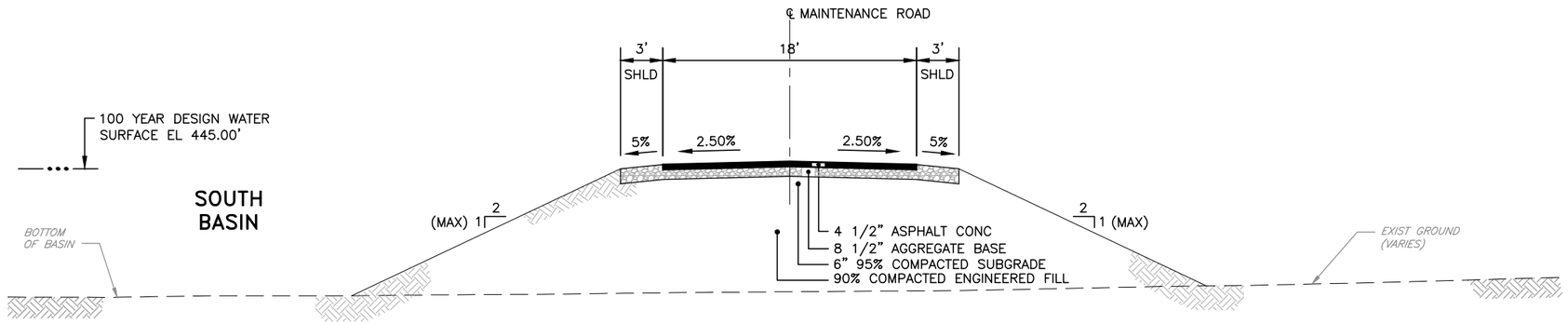

TYPICAL SECTION A C-13 REALIGNED MAINTENANCE ROAD STA 2+40 TO STA 6+00 (APPROX)

SCALE: 1" = 5'

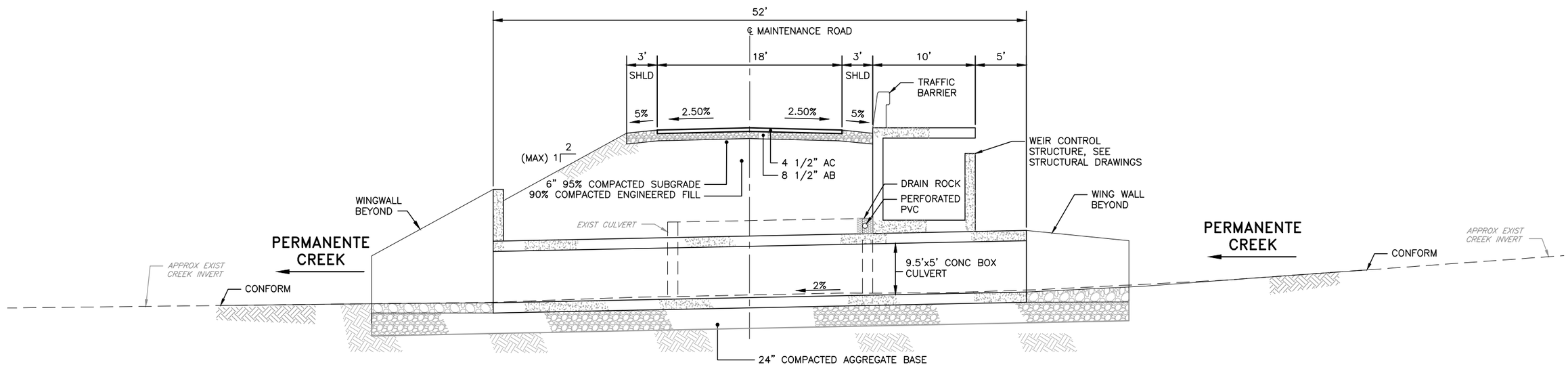

TYPICAL SECTION B C-21 REALIGNED MAINTENANCE ROAD AT PERMANENTE CULVERT

SCALE: 1" = 5'

REDUCED HALF SIZE (11X17)

REV	DESCRIPTION	DATE	APPR.
A	30% REVIEW SUBMITTAL	11/11	J.S.
B	60% REVIEW SUBMITTAL	04/12	J.S.

REFERENCE INFORMATION AND NOTES

Hatch Mott MacDonald

DATE 4-16-12
DESIGN Y LIAO
DRAWN K MEYER
CHECKED G RITTER

ENGINEERING CERTIFICATION
REGISTERED PROFESSIONAL ENGINEER TRACIE K SAKAKIHARA C37141 CIVIL STATE OF CALIFORNIA
PROJECT ENGINEER DATE

Santa Clara Valley Water District
ACCEPTED BY DISTRICT

PROJECT NAME AND SHEET DESCRIPTION:
PERMANENTE CREEK FLOOD PROTECTION PROJECT
RANCHO SAN ANTONIO CEMETERY MAINTENANCE ROAD REALIGNMENT TYPICAL SECTIONS

SCALE 1" = 5'
VERIFY SCALES 0 1"
BAR IS ONE INCH ON ORIGINAL DRAWING IF NOT ONE INCH ON THIS SHEET, ADJUST SCALES ACCORDINGLY

PROJECT NUMBER 26244001
SHEET CODE: C-22
PAGE NUMBER: OF

DOCUMENT NUMBER: XXXX-X-0000-0000000.00

USERNAME: BillShad Tue 08 Jul 2008 09:32am
FILENAME: C:\pwworking\hmm\external\mey4925\dms24078\C-22

CURVE TABLE			
CURVE	RADIUS	LENGTH	DELTA
C1	40.00	44.93	64°21'42"
C2	75.00	57.96	44°16'52"
C3	200.00	172.46	49°24'26"

LINE TABLE		
LINE	LENGTH	BEARING
L1	11.17	S17°51'22"W
L2	111.78	S46°30'20"E
L3	202.40	S2°13'27"E
L4	207.65	S47°10'59"W

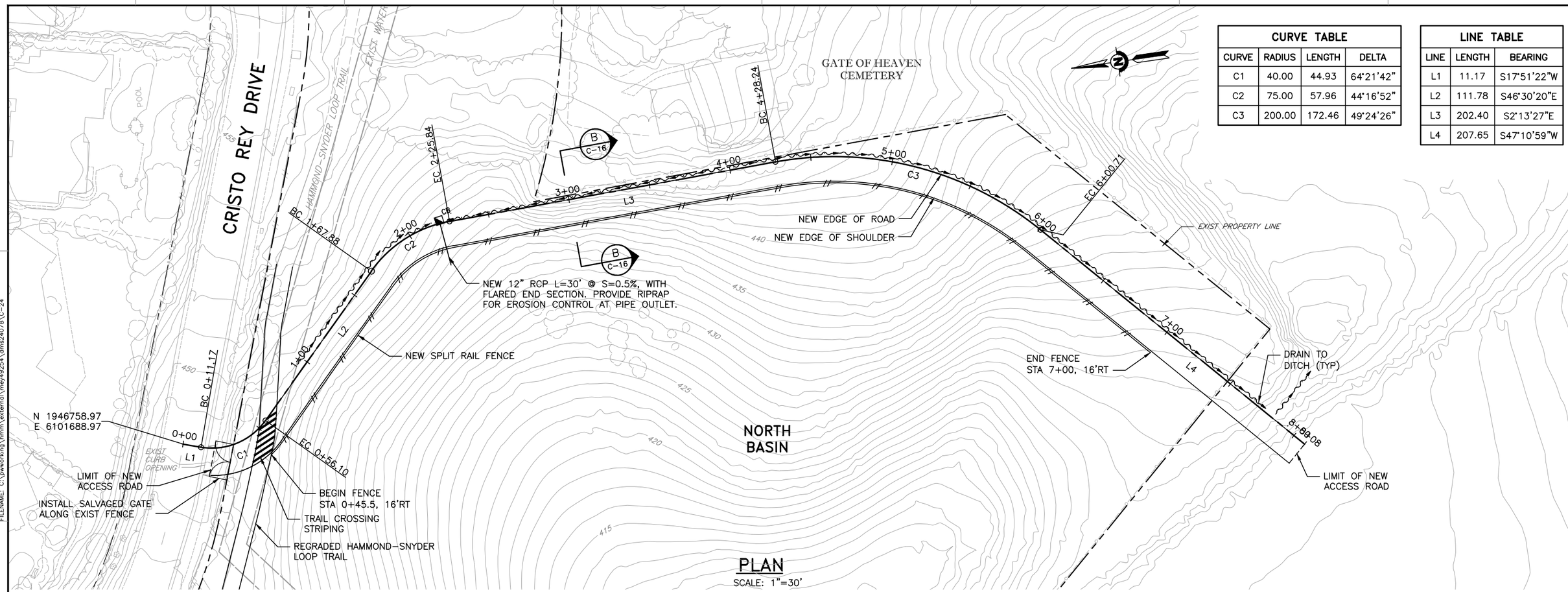

PLAN

SCALE: 1"=30'

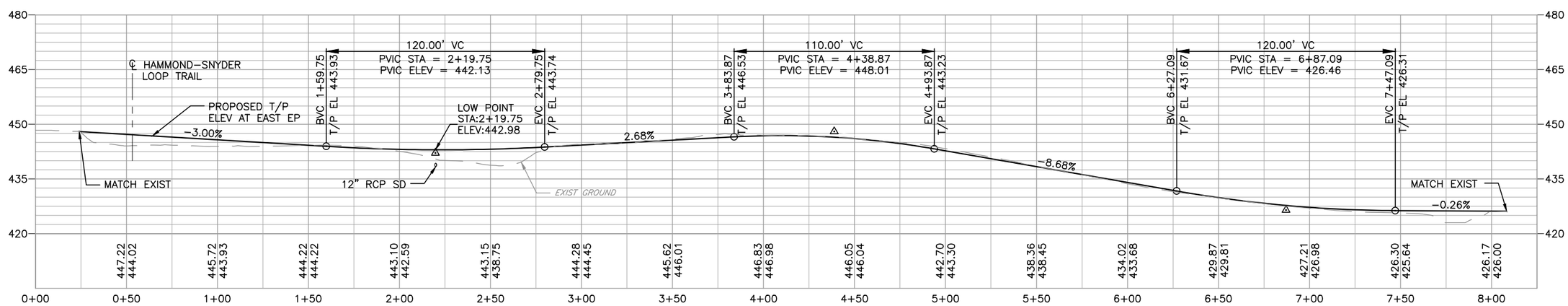

PROFILE

SCALE: 1"=30' HORIZ
1"=15' VERT

REDUCED HALF SIZE (11X17)

REV	DESCRIPTION	DATE	APPR.
A	60% REVIEW SUBMITTAL	4/12	T.S.

REFERENCE INFORMATION AND NOTES

Hatch Mott MacDonald

DATE	
4-16-12	
DESIGN	Y LIAO
DRAWN	K MEYER
CHECKED	G RITTER

ENGINEERING CERTIFICATION

REGISTERED PROFESSIONAL ENGINEER TRACIE K. SAKAKIHARA C37141 CIVIL STATE OF CALIFORNIA

PROJECT ENGINEER DATE

Santa Clara Valley Water District

ACCEPTED BY DISTRICT

PROJECT NAME AND SHEET DESCRIPTION:

PERMANENTE CREEK FLOOD PROTECTION PROJECT

RANCHO SAN ANTONIO CEMETERY ACCESS ROAD PLAN AND PROFILE

SCALE: 1" = 30'

VERIFY SCALES: 0 1"

BAR IS ONE INCH ON ORIGINAL DRAWING IF NOT ONE INCH ON THIS SHEET, ADJUST SCALES ACCORDINGLY

PROJECT NUMBER: 26244001

SHEET CODE: C-24

PAGE NUMBER: OF

DOCUMENT NUMBER: XXXX-X-0000-0000000.00

USERNAME: BillShad Tue 08 Jul 2008 09:32am
FILENAME: C:\pwworking\mrm\external\mey4925\dms24078\C-24

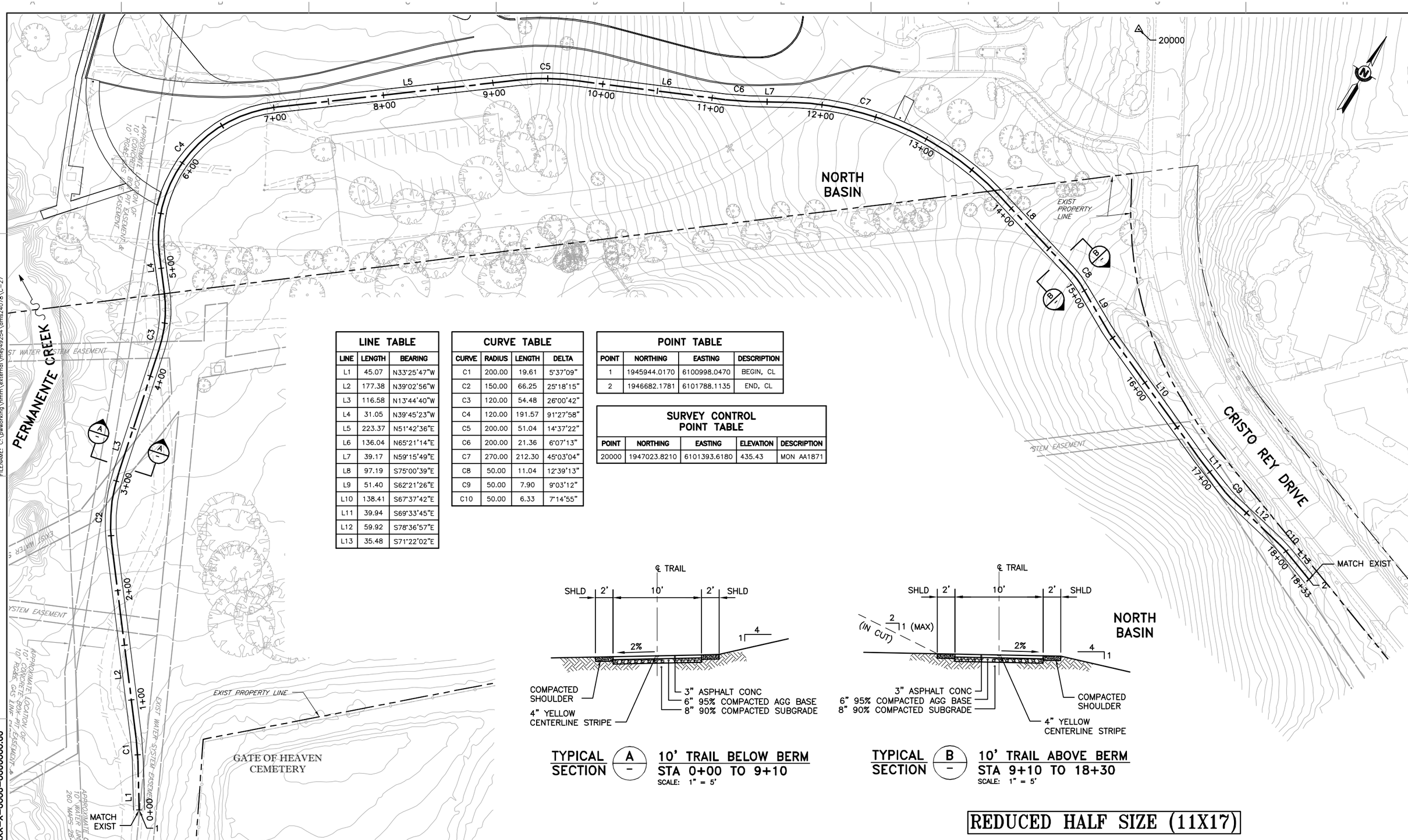

LINE TABLE		
LINE	LENGTH	BEARING
L1	45.07	N33°25'47"W
L2	177.38	N39°02'56"W
L3	116.58	N13°44'40"W
L4	31.05	N39°45'23"W
L5	223.37	N51°42'36"E
L6	136.04	N65°21'14"E
L7	39.17	N59°15'49"E
L8	97.19	S75°00'39"E
L9	51.40	S62°21'26"E
L10	138.41	S67°37'42"E
L11	39.94	S69°33'45"E
L12	59.92	S78°36'57"E
L13	35.48	S71°22'02"E

CURVE TABLE			
CURVE	RADIUS	LENGTH	DELTA
C1	200.00	19.61	5°37'09"
C2	150.00	66.25	25°18'15"
C3	120.00	54.48	26°00'42"
C4	120.00	191.57	91°27'58"
C5	200.00	51.04	14°37'22"
C6	200.00	21.36	6°07'13"
C7	270.00	212.30	45°03'04"
C8	50.00	11.04	12°39'13"
C9	50.00	7.90	9°03'12"
C10	50.00	6.33	7°14'55"

POINT TABLE			
POINT	NORTHING	EASTING	DESCRIPTION
1	1945944.0170	6100998.0470	BEGIN, CL
2	1946682.1781	6101788.1135	END, CL

SURVEY CONTROL POINT TABLE				
POINT	NORTHING	EASTING	ELEVATION	DESCRIPTION
20000	1947023.8210	6101393.6180	435.43	MON AA1871

TYPICAL SECTION (A) 10' TRAIL BELOW BERM
STA 0+00 TO 9+10
SCALE: 1" = 5'

TYPICAL SECTION (B) 10' TRAIL ABOVE BERM
STA 9+10 TO 18+30
SCALE: 1" = 5'

REDUCED HALF SIZE (11X17)

REV	DESCRIPTION	DATE	APPR.
A	60% REVIEW SUBMITTAL	04/12	T.S.

REFERENCE INFORMATION AND NOTES

Hatch Mott MacDonald

DATE 4-16-12
DESIGN Y LIAO
DRAWN K MEYER
CHECKED G RITTER

ENGINEERING CERTIFICATION
REGISTERED PROFESSIONAL ENGINEER TRACIE K SAKAHIHARA C37141 CIVIL STATE OF CALIFORNIA
PROJECT ENGINEER DATE

Santa Clara Valley Water District
ACCEPTED BY DISTRICT

PROJECT NAME AND SHEET DESCRIPTION:
PERMANENTE CREEK FLOOD PROTECTION PROJECT
RANCHO SAN ANTONIO
HAMMOND-SNYDER LOOP TRAIL
LAYOUT & DETAILS

SCALE 1" = 40'
VERIFY SCALES 0 1"
BAR IS ONE INCH ON ORIGINAL DRAWING IF NOT ONE INCH ON THIS SHEET, ADJUST SCALES ACCORDINGLY

PROJECT NUMBER 26244001
SHEET CODE: C-27
PAGE NUMBER: OF

DOCUMENT NUMBER: XXXX-X-0000-0000000.00

USERNAME: BillShad Tue 08 Jul 2008 09:32am
FILENAME: C:\pwworking\mrm\external\mey49254\dms24078\C-27

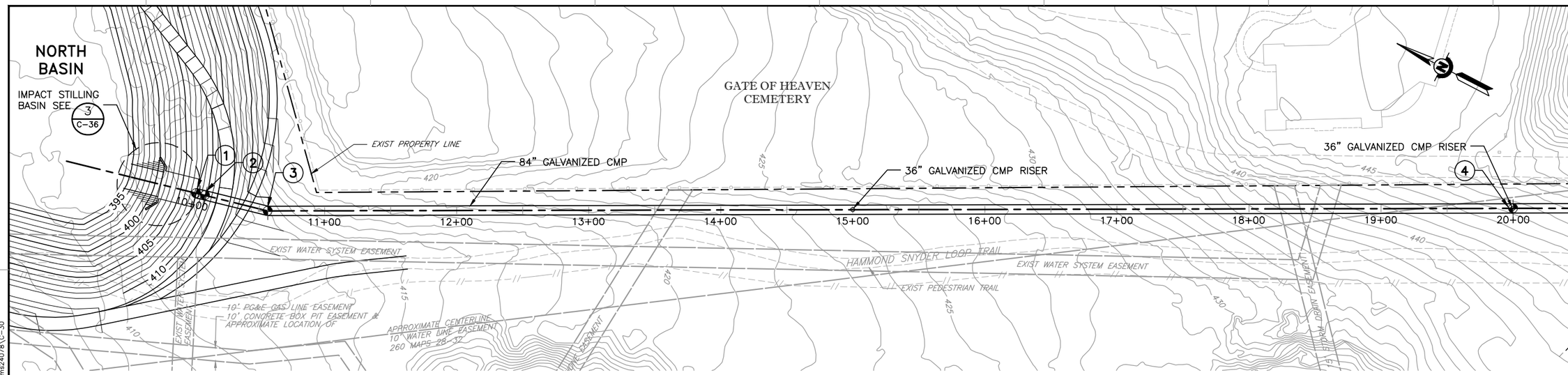

PLAN

SCALE: 1"=40'

NOTES:
1. FOR CONTROL POINT DATA SEE DWG C-31
2. SEE 2 C-36 FOR TYPICAL TRENCH BACKFILL

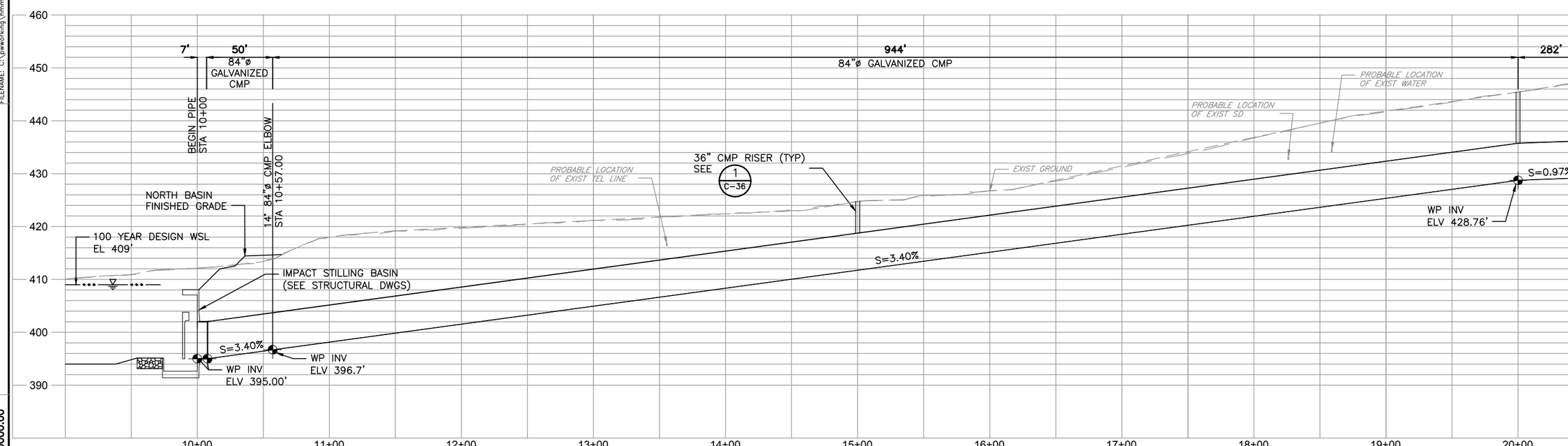

PROFILE

SCALE: 1"=40' HORIZ
1"=10' VERT

REDUCED HALF SIZE (11X17)

REV	DESCRIPTION	DATE	APPR.
A	30% REVIEW SUBMITTAL	11/11	J.S.
B	60% REVIEW SUBMITTAL	04/12	J.S.

REFERENCE INFORMATION AND NOTES

Hatch Mott MacDonald

DATE 4-16-12
DESIGN Y LIAO
DRAWN K MEYER
CHECKED T GRAU

ENGINEERING CERTIFICATION
REGISTERED PROFESSIONAL ENGINEER TRACIE K SAKAKIHARA C37141 CIVIL STATE OF CALIFORNIA
PROJECT ENGINEER DATE

Santa Clara Valley Water District
ACCEPTED BY DISTRICT

PROJECT NAME AND SHEET DESCRIPTION:
PERMANENTE CREEK FLOOD PROTECTION PROJECT
RANCHO SAN ANTONIO
NORTH BASIN INLET PIPE
PLAN AND PROFILE

SCALE 1" = 40'
VERIFY SCALES 0 1"
BAR IS ONE INCH ON ORIGINAL DRAWING IF NOT ONE INCH ON THIS SHEET, ADJUST SCALES ACCORDINGLY

PROJECT NUMBER 26244001
SHEET CODE: C-30
PAGE NUMBER: OF

DOCUMENT NUMBER: XXXX-X-0000-0000000.00

USERNAME: BillShad Tue 08 Jul 2008 09:32am
FILENAME: C:\pwworking\mrm\external\mey4925A\dms24078\C-30

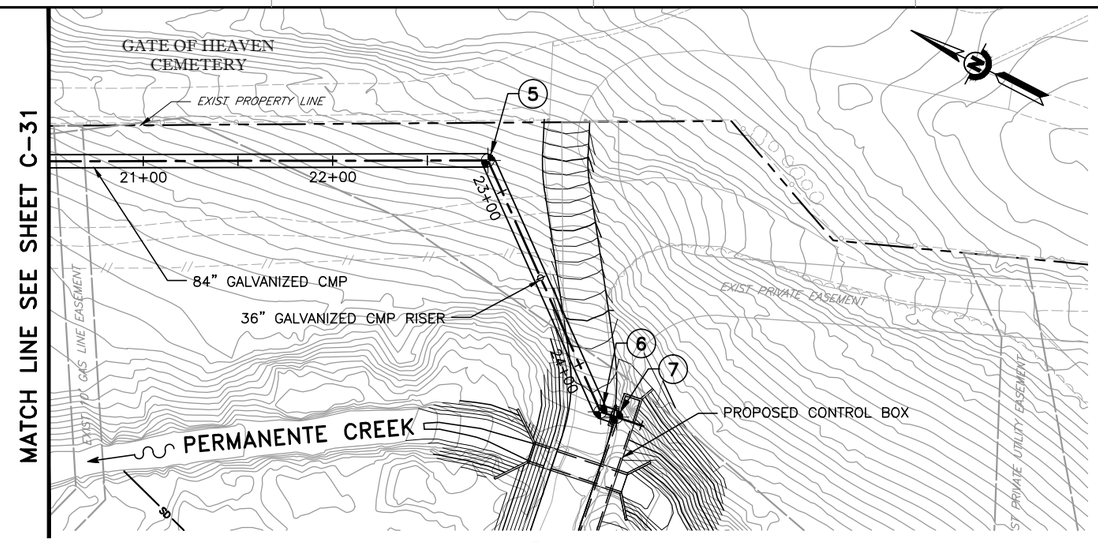

PLAN

SCALE: 1"=40'

CONTROL POINT DATA		
POINT NO	COORDINATES	ELEVATION
POINT 1	N 1946109.8901 E 6100971.0453	INV EL 395.00
POINT 2	N 1946103.0850 E 6100972.6857	INV EL 395.00
POINT 3	N 1946055.4601 E 6100984.1659	INV EL 396.70
POINT 4	N 1945219.4129 E 6101420.3799	INV EL 428.76
POINT 5	N 1944969.3995 E 6101550.8274	INV EL 431.50
POINT 6	N 1944855.6415 E 6101460.5103	INV EL 432.91
POINT 7	N 1944846.8216 E 6101461.8946	INV EL 433.00

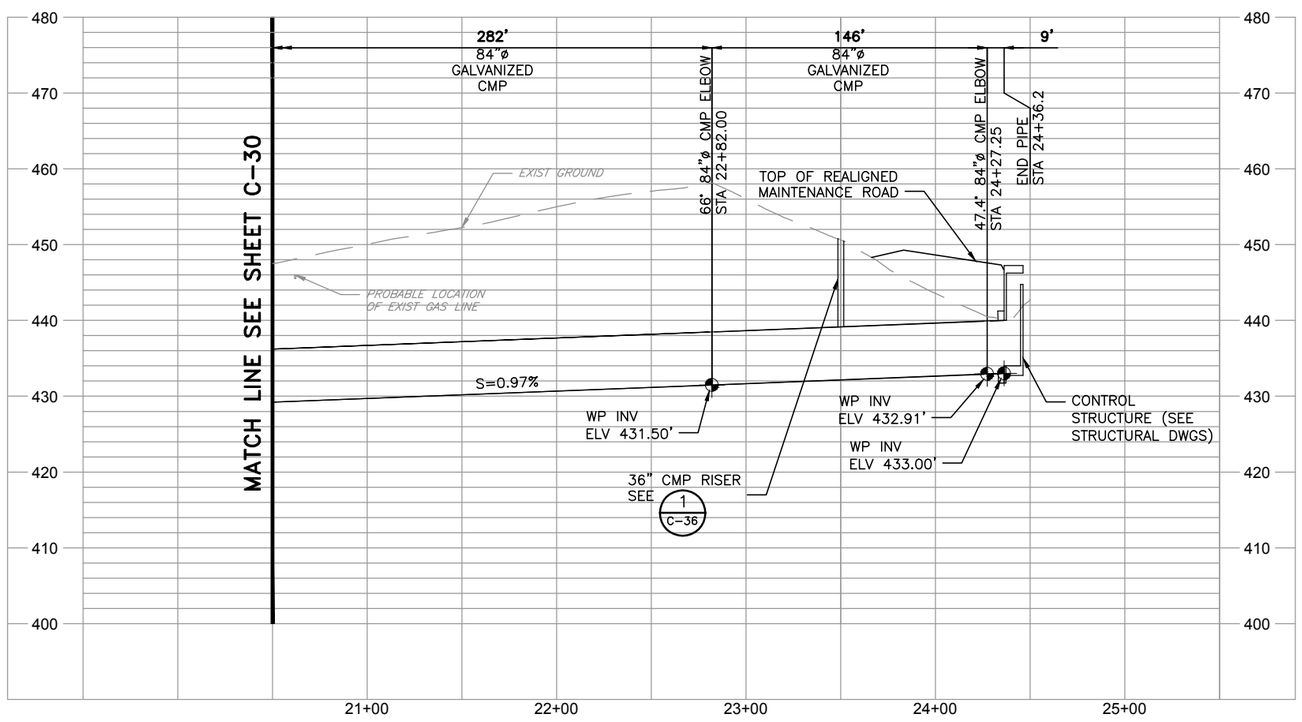

PROFILE

SCALE: 1"=40' HORIZ
1"=10' VERT

REDUCED HALF SIZE (11X17)

REV	DESCRIPTION	DATE	APPR.
A	30% REVIEW SUBMITTAL	11/11	J.S.
B	60% REVIEW SUBMITTAL	04/12	J.S.

REFERENCE INFORMATION AND NOTES

Hatch Mott MacDonald

DATE	4-16-12
DESIGN	Y LIAO
DRAWN	K MEYER
CHECKED	T GRAU

ENGINEERING CERTIFICATION

REGISTERED PROFESSIONAL ENGINEER TRACIE K SAKAKIHARA C37141 CIVIL STATE OF CALIFORNIA

PROJECT ENGINEER DATE

Santa Clara Valley Water District

ACCEPTED BY DISTRICT

PROJECT NAME AND SHEET DESCRIPTION:

PERMANENTE CREEK FLOOD PROTECTION PROJECT

RANCHO SAN ANTONIO
NORTH BASIN INLET PIPE
PLAN AND PROFILE

SCALE 1" = 40'

VERIFY SCALES 0 1"
BAR IS ONE INCH ON ORIGINAL DRAWING IF NOT ONE INCH ON THIS SHEET, ADJUST SCALES ACCORDINGLY

PROJECT NUMBER 26244001

SHEET CODE: C-31

PAGE NUMBER: OF

DOCUMENT NUMBER: XXXX-X-0000-0000000.00

USERNAME: BillShad Tue 08 Jul 2008 09:32am
FILENAME: C:\pwworking\hmm\external\mey4925A\dms24078\C-31

NOTE:
1. 6' TALL DEBRIS RACK WITH 4" MAX BAR SPACING (SEE CALTRANS STD PLAN D93C)

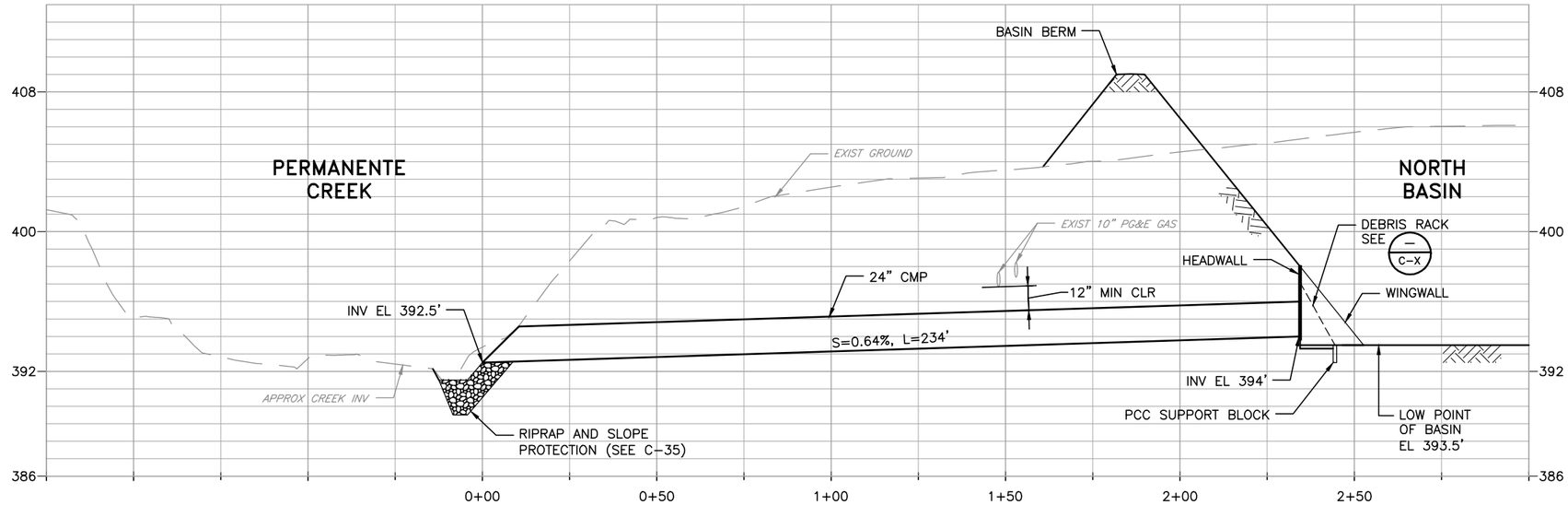

SECTION A C-6 NORTH BASIN OUTLET PIPE
SCALE: H:1"=20' V:1"=4'

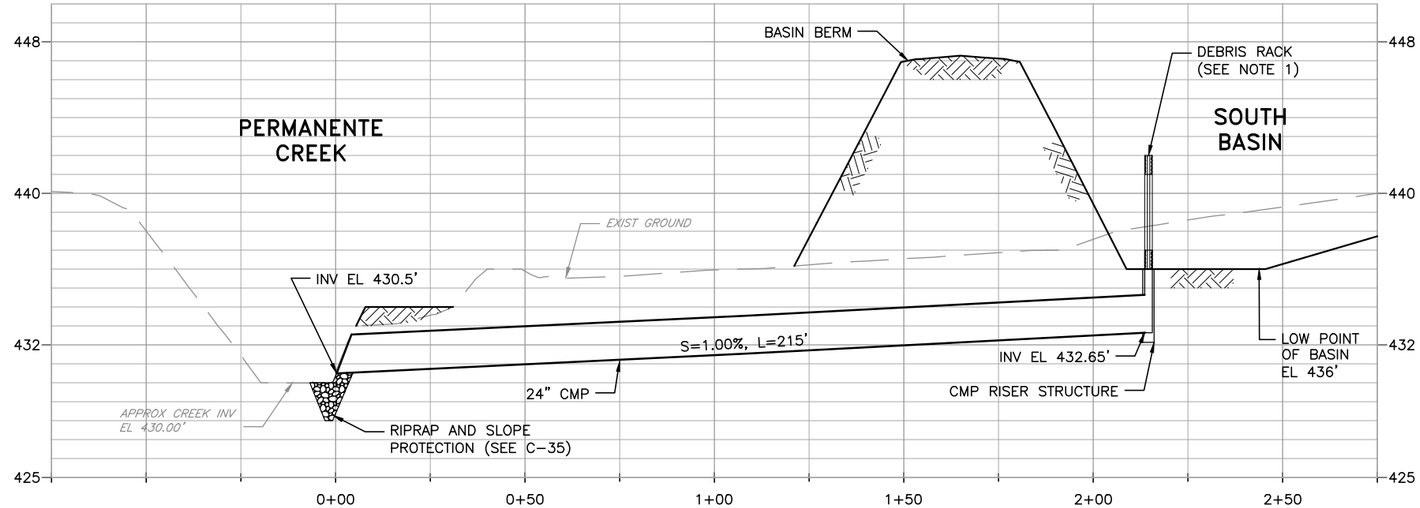

SECTION B C-8 SOUTH BASIN OUTLET PIPE
SCALE: H:1"=20' V:1"=4'

REDUCED HALF SIZE (11X17)

REV	DESCRIPTION	DATE	APPR.
A	60% REVIEW SUBMITTAL	04/12	J.S.

REFERENCE INFORMATION AND NOTES

Hatch Mott MacDonald

DATE 4-16-12
DESIGN Y LIAO
DRAWN K MEYER
CHECKED T GRAU

ENGINEERING CERTIFICATION
REGISTERED PROFESSIONAL ENGINEER RACHEL K SAKAKIHARA C37141 CIVIL STATE OF CALIFORNIA
PROJECT ENGINEER DATE

Santa Clara Valley Water District
ACCEPTED BY DISTRICT

PROJECT NAME AND SHEET DESCRIPTION:
PERMANENTE CREEK FLOOD PROTECTION PROJECT
RANCHO SAN ANTONIO BASIN OUTLET PIPES PROFILE

SCALE 1" = 20'
VERIFY SCALES 0 1"
BAR IS ONE INCH ON ORIGINAL DRAWING IF NOT ONE INCH ON THIS SHEET, ADJUST SCALES ACCORDINGLY

PROJECT NUMBER 26244001
SHEET CODE: C-33
SHEET NUMBER: OF

DOCUMENT NUMBER: XXXX-X-0000-0000000.00

USERNAME: MEY49254 Mon 16 Apr 2012 02:23pm
FILENAME: C:\pwworking\mnm\external\mey49254\dms24078\C-33

SLOPE PROTECTION DIMENSIONS												
PIPE OUTLET LOCATION	FLOW DIRECTION	PIPE DIAMETER "D" (IN)	½ SLOPE PROTECTION WIDTH "A" (FT)	ROCK THICKNESS "T" (FT)	CHANNEL BOTTOM ROCK WIDTH "B" (FT)	SLOPE PROTECTION WIDTH "W" (FT)	HEIGHT OF ROCK "H" (FT)	TOP OF BANK ELEVATION	TOE OF BANK ELEVATION	PIPE INVERT ELEVATION	PIPE OUTFALL SLOPE "S"	BANK OUTFALL SLOPE (H:V)
SOUTH BASIN	FROM: CONTROL STRUCTURE TO: SOUTH BASIN	36	6	2	8	12	1.5	446	436	437.5	0.0180	2:1
CREEK (NEAR SOUTH BASIN)	FROM: SOUTH BASIN TO: CREEK	24	4	2	6	8	1.5	433	429	430.5	0.0100	1.7:1
CREEK (NEAR NORTH BASIN)	FROM: NORTH BASIN TO: CREEK	24	4	2	6	8	1.5	400	391	392.5	0.0064	3.5:1

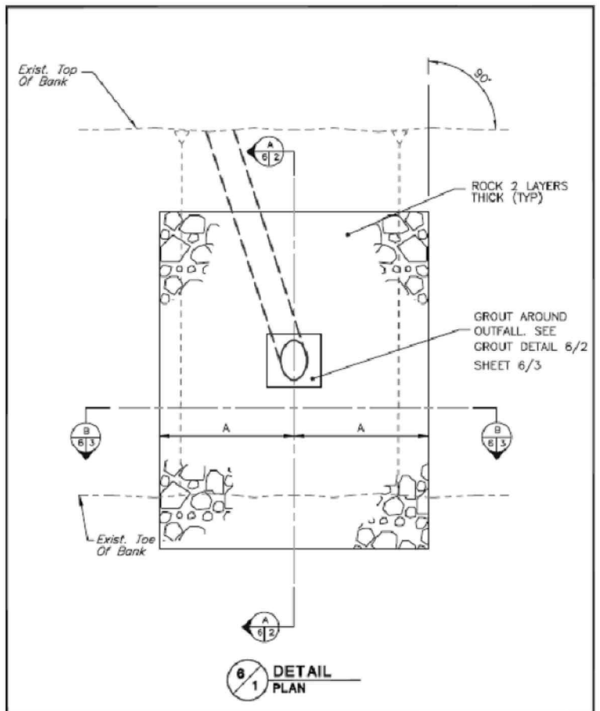

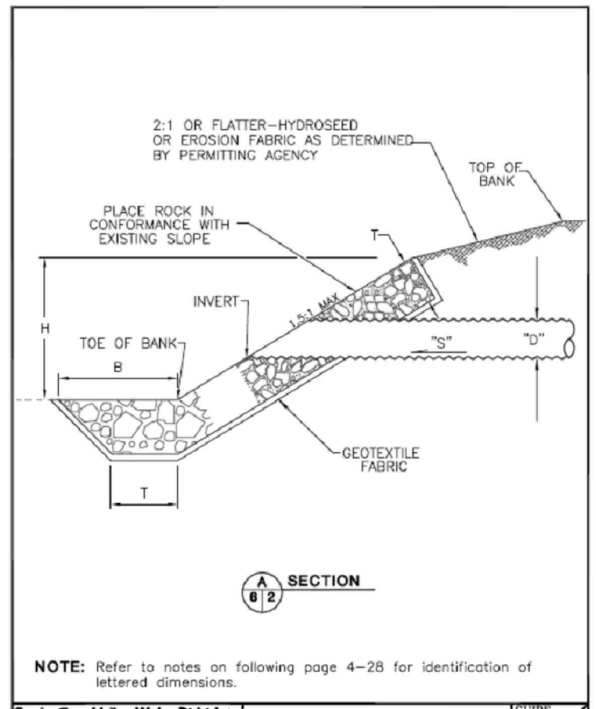

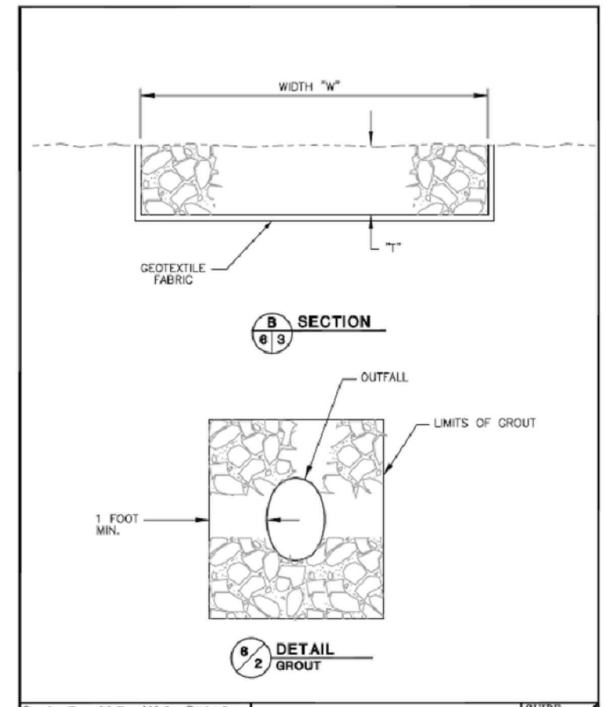

REDUCED HALF SIZE (11X17)

REV	DESCRIPTION	DATE	APPR.
A	60% REVIEW SUBMITTAL	04/12	J.L.

REFERENCE INFORMATION AND NOTES

Hatch Mott MacDonald

DATE 4–16–12
DESIGN Y LIAO
DRAWN K MEYER
CHECKED T GRAU

ENGINEERING CERTIFICATION
REGISTERED PROFESSIONAL ENGINEER TRACIE K SAKAKIHARA C37141 CIVIL STATE OF CALIFORNIA
PROJECT ENGINEER DATE

Santa Clara Valley Water District
ACCEPTED BY DISTRICT

PROJECT NAME AND SHEET DESCRIPTION:
PERMANENTE CREEK FLOOD PROTECTION PROJECT
RANCHO SAN ANTONIO DRAINAGE DETAILS SLOPE PROTECTION DIMENSIONS

SCALE: NTS
VERIFY SCALES 0 1"
BAR IS ONE INCH ON ORIGINAL DRAWING IF NOT ONE INCH ON THIS SHEET, ADJUST SCALES ACCORDINGLY

PROJECT NUMBER 26244001
SHEET CODE: C–35
PAGE NUMBER: OF

DOCUMENT NUMBER: XXXX–X–0000–0000000.00

USERNAME: BillShad Tue 08 Jul 2008 09:32am
FILENAME: C:\pwworking\mrm\external\mey4925A\dms24078\C-35

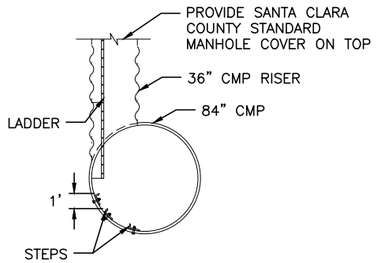

NOTE: SEE CALTRANS STANDARD PLAN D93A

DETAIL 1 / C-30 — 84" CMP WITH 36" CMP RISER

SCALE: NTS

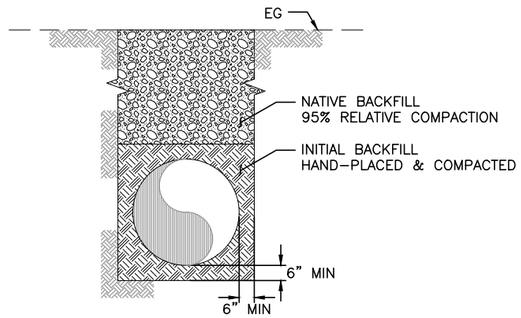

DETAIL 2 / C-30 — TYPICAL TRENCH BACKFILL

SCALE: NTS

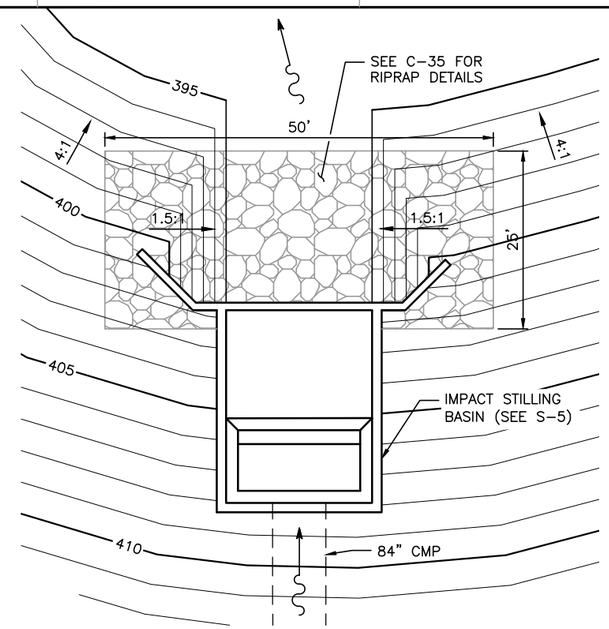

DETAIL 3 / C-6 — IMPACT STILLING BASIN GRADING PLAN

SCALE: NTS

REDUCED HALF SIZE (11X17)

REV	DESCRIPTION	DATE	APPR.
A	60% REVIEW SUBMITTAL	04/12	J.S.

REFERENCE INFORMATION AND NOTES

Hatch Mott MacDonald

DATE 4-16-12
DESIGN Y LIAO
DRAWN K MEYER
CHECKED T GRAU

ENGINEERING CERTIFICATION
REGISTERED PROFESSIONAL ENGINEER — TRACIE K. SAKAKIHARA — C37141 — CIVIL — STATE OF CALIFORNIA

PROJECT ENGINEER DATE

Santa Clara Valley Water District

ACCEPTED BY DISTRICT

PROJECT NAME AND SHEET DESCRIPTION:

PERMANENTE CREEK FLOOD PROTECTION PROJECT

RANCHO SAN ANTONIO DRAINAGE DETAILS

SCALE: NTS

VERIFY SCALES: 0 — 1"
BAR IS ONE INCH ON ORIGINAL DRAWING IF NOT ONE INCH ON THIS SHEET, ADJUST SCALES ACCORDINGLY

PROJECT NUMBER: 26244001

SHEET CODE: C-36

PAGE NUMBER: OF

DOCUMENT NUMBER: XXXX-X-0000-000000.00

USERNAME: BillShad Tue 08 Jul 2008 09:32am
FILENAME: C:\pwworking\hmm\external\mey49254\dms24078\C-36

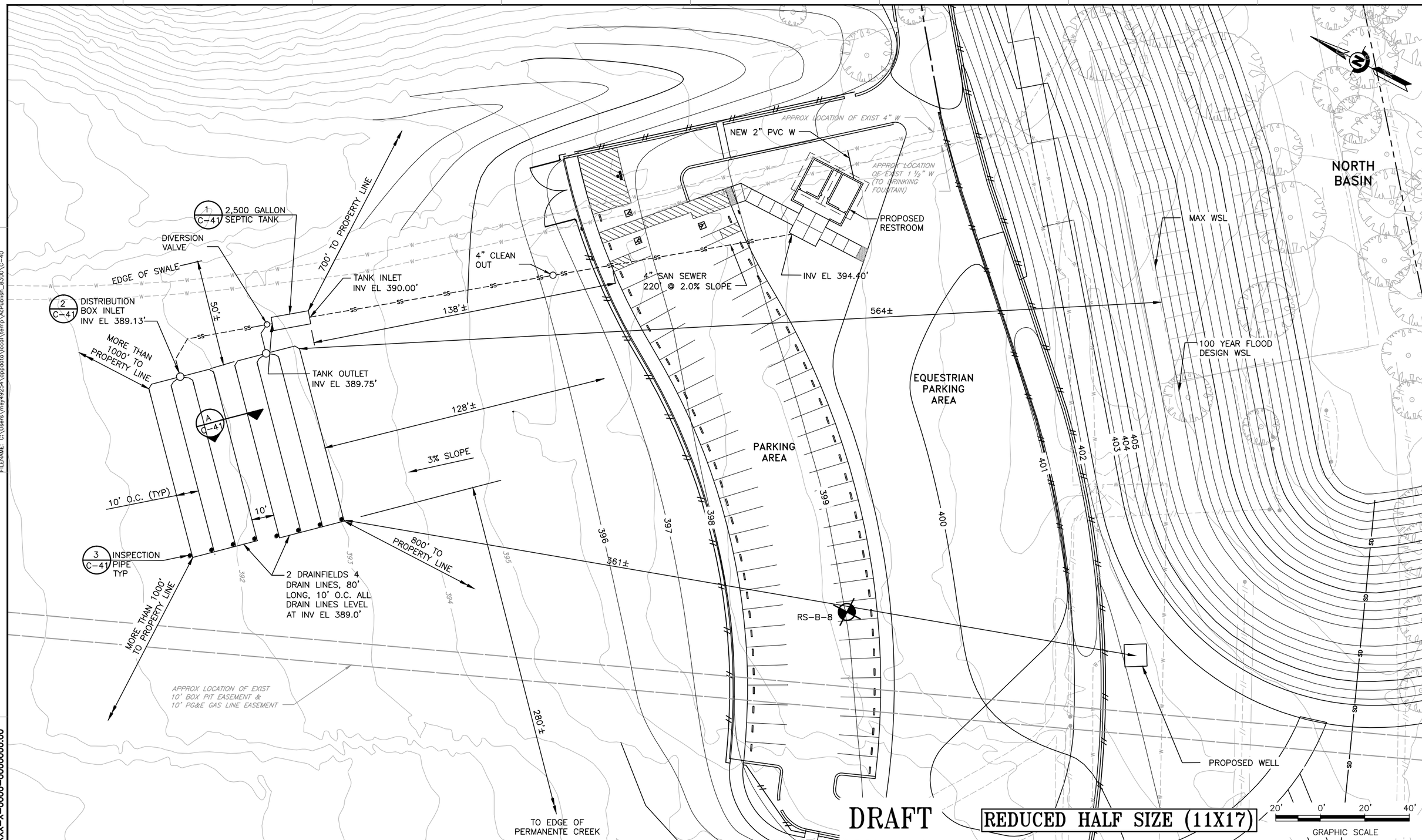

USERNAME: BRISHed Tue 08 Jul 2008 09:32am
FILENAME: C:\Users\mey4925A\appdata\local\temp\AcPublish_8300\C-40

DOCUMENT NUMBER: XXXX-X-0000-0000000.00

REV	DESCRIPTION	DATE	APPR.
A	60% REVIEW SUBMITTAL	04/12	J.S.

REFERENCE INFORMATION AND NOTES

Hatch Mott MacDonald

DATE	3-16-12
DESIGN	D PETRAMALA
DRAWN	C CONFER
CHECKED	R ANDERSON

ENGINEERING CERTIFICATION

REGISTERED PROFESSIONAL ENGINEER TRACIE K SAKAKIHARA C37141 CIVIL STATE OF CALIFORNIA

PROJECT ENGINEER DATE

Santa Clara Valley Water District

ACCEPTED BY DISTRICT

PROJECT NAME AND SHEET DESCRIPTION:

PERMANENTE CREEK FLOOD PROTECTION PROJECT

RANCHO SAN ANTONIO ON SITE SEPTIC SYSTEM AND DRAINFIELD

SCALE 1" = 20'

VERIFY SCALES 0 1"

BAR IS ONE INCH ON ORIGINAL DRAWING IF NOT ONE INCH ON THIS SHEET, ADJUST SCALES ACCORDINGLY

PROJECT NUMBER 26244001

SHEET CODE: C-40

PAGE NUMBER: OF

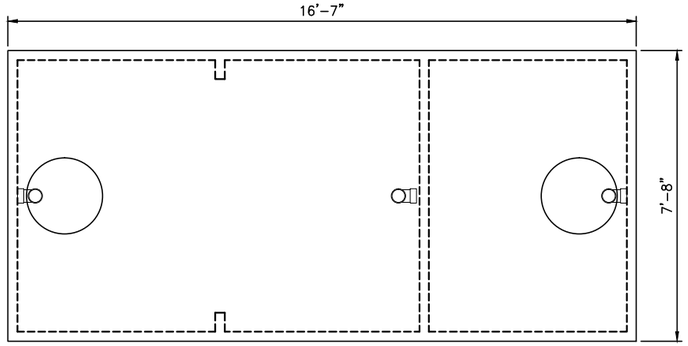

TOP VIEW

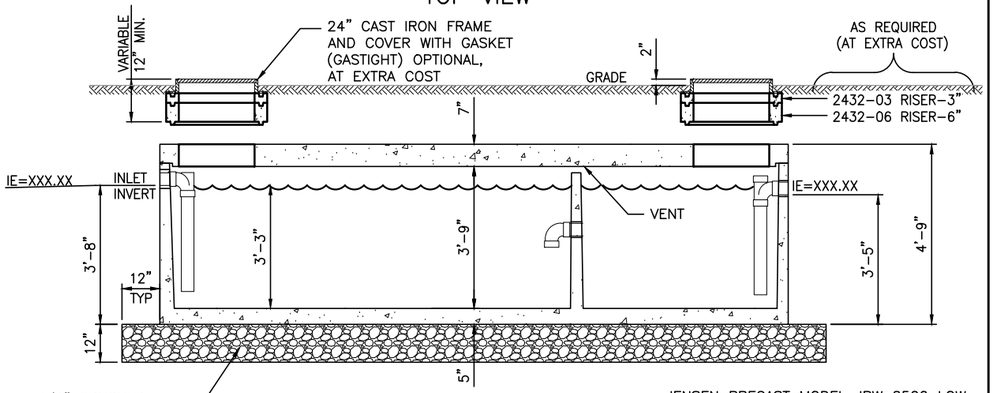

SIDE VIEW (CUT AWAY)

JENSEN PRECAST MODEL JPW 2500 LOW PROFILE SEPTIC TANK.
DESIGN LOAD: H-20 TRAFFIC WITH 1' TO 5' EARTH COVER.

DETAIL 1 / C41 — 2,500 GALLON SEPTIC TANK
SCALE: 1/2"=1'-0"

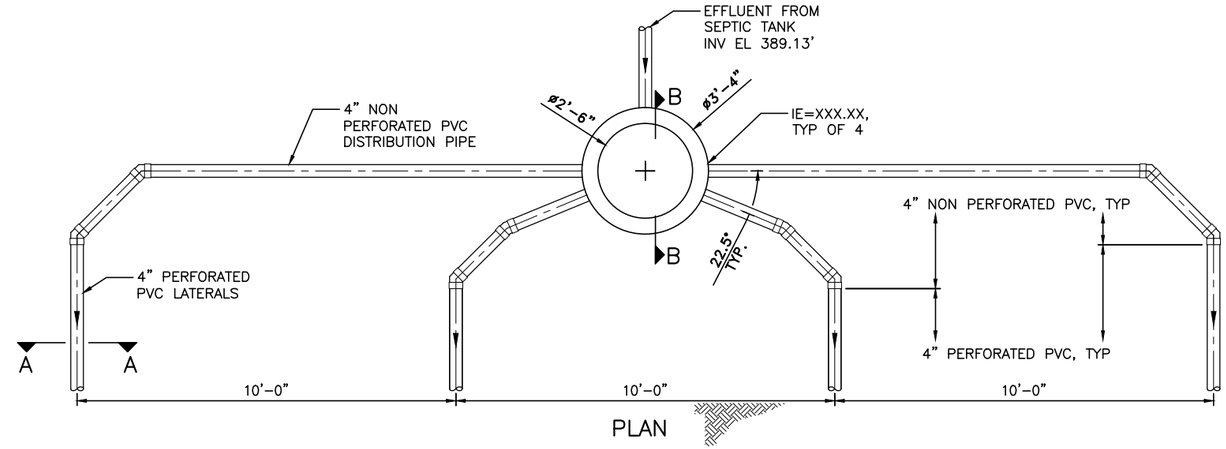

PLAN

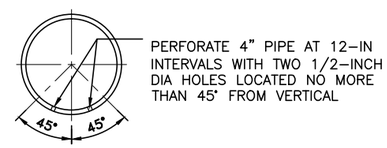

SECTION A-A

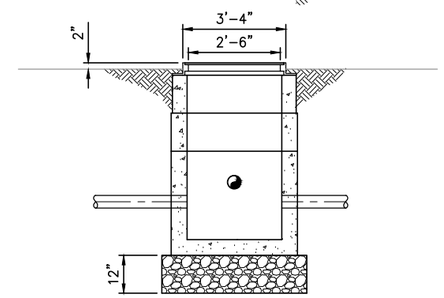

SECTION B-B

DETAIL 2 / C41 — DISTRIBUTION BOX
SCALE: 1/2"=1'-0"

GENERAL NOTES:
1. JENSEN MODEL D-30 WITH H-20 TRAFFIC LOADING 24" CAST IRON RING & COVER WITH GAS TIGHT GASKET AND D30-24C REDUCER.
2. PROVIDE 3040 AND 2432 GRADE RINGS AS REQUIRED.
3. PLACE DISTRIBUTION BOX ON A 12" OF 3/4" CRUSHED ROCK FOUNDATION.
4. INSTALL DISTRIBUTION BOX LEVEL.

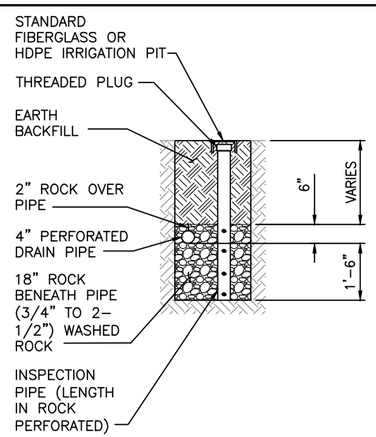

DETAIL 3 / C41 — INSPECTION PIPE
SCALE: 1"=40'

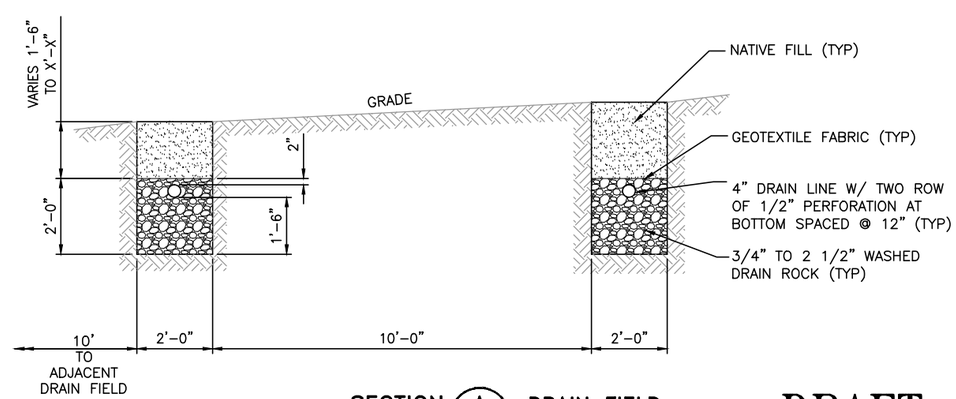

SECTION A / C41 — DRAIN FIELD
SCALE: 1"=40'

DRAFT

GENERAL NOTES

I. PRECAST STRUCTURAL UNITS

1. DESIGN, FABRICATION, AND CONSTRUCTION OF PRECAST STRUCTURAL UNITS SHALL CONFORM TO ACI 318.
2. ALL CONCRETE SHALL BE NORMAL WEIGHT (145 PCF, STONE AGGREGATE) MEETING THE FOLLOWING REQUIREMENTS:
   A. USE TYPE II OR III PORTLAND CEMENT
   B. MINIMUM CONCRETE 28-DAY STRENGTH – f'c = 4,000 PSI
   C. REINFORCING STEEL – – – – ASTM A615, GRADE 60
   D. WELDED WIRE FABRIC – – – – ASTM A185

II. DESIGN LOADS

1. STRUCTURE SHALL BE DESIGNED TO RESIST INTERNAL HYDROSTATIC PRESSURE OF WATER TO ELEVATION 392.00 WITHOUT SOIL BACKFILL IN PLACE.
2. STRUCTURE SHALL BE DESIGNED TO RESIST EXTERIOR SOIL AND WATER PRESSURE, INCLUDING:
   A. 2 FOOT SURCHARGE TO ACCOUNT FOR VEHICLE LOADING.
   B. SOIL EQUIVALENT SOIL PRESSURE = 45 PSF (DRAINED)
3. MAXIMUM FOOTING OR SLAB BEARING PRESSURE SHALL NOT EXCEED 3,000 PSF.
4. ALL COMPONENTS SHALL BE CAPABLE OF HS-20 LOADING.

REV	DESCRIPTION	DATE	APPR.
A	30% REVIEW SUBMITTAL	11/11	J.S.
B	60% REVIEW SUBMITTAL	04/12	J.S.

REFERENCE INFORMATION AND NOTES

Hatch Mott MacDonald

DATE 3-16-12
DESIGN D PETRAMALA
DRAWN C CONFER
CHECKED R ANDERSON

ENGINEERING CERTIFICATION
REGISTERED PROFESSIONAL ENGINEER TRACIE K SAKAKIHARA C37141 CIVIL STATE OF CALIFORNIA
PROJECT ENGINEER DATE

Santa Clara Valley Water District
ACCEPTED BY DISTRICT

PROJECT NAME AND SHEET DESCRIPTION:
PERMANENTE CREEK FLOOD PROTECTION PROJECT
RANCHO SAN ANTONIO DRAINFIELD DETAILS AND SECTIONS

SCALE: AS SHOWN
VERIFY SCALES: 0 — 1" BAR IS ONE INCH ON ORIGINAL DRAWING IF NOT ONE INCH ON THIS SHEET, ADJUST SCALES ACCORDINGLY

PROJECT NUMBER: 26244001
SHEET CODE: C-41
SHEET NUMBER: OF

DOCUMENT NUMBER: XXXX-X-0000-0000000.00

USERNAME: MEY49254 Mon 16 Apr 2012 11:27am
FILENAME: C:\pwworking\mrm\external\mey49254\dms24078\C-41

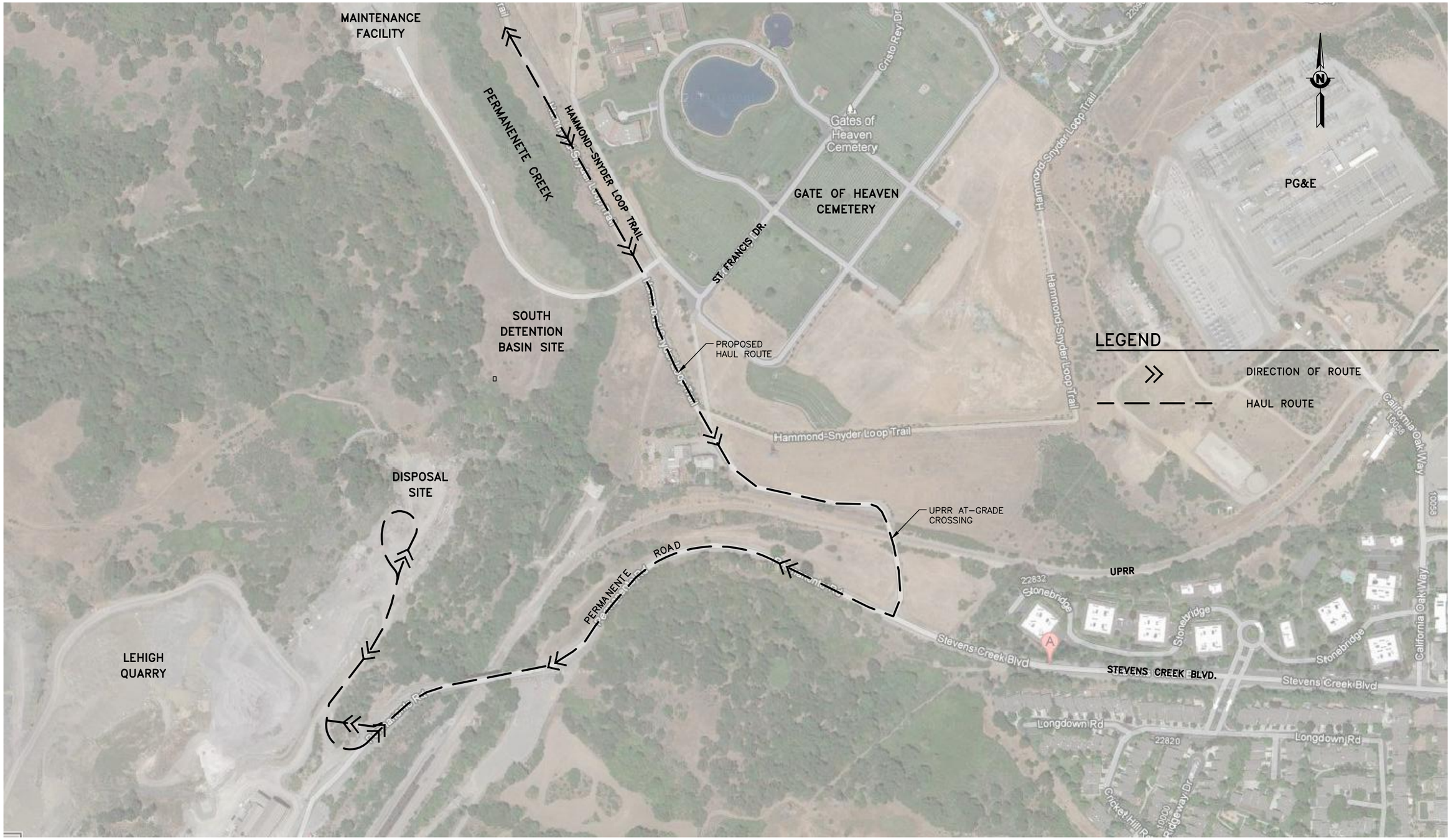

REDUCED HALF SIZE (11X17)

REV	DESCRIPTION	DATE	APPR.
A	30% REVIEW SUBMITTAL	11/11	J.S.
B	60% REVIEW SUBMITTAL	04/12	J.S.

REFERENCE INFORMATION AND NOTES

Hatch Mott MacDonald

DATE 4-16-12
DESIGN Y LIAO
DRAWN M WHITE
CHECKED G RITTER

ENGINEERING CERTIFICATION
REGISTERED PROFESSIONAL ENGINEER TRACIE K. SAKAKIHARA C37141 CIVIL STATE OF CALIFORNIA
PROJECT ENGINEER DATE

Santa Clara Valley Water District
ACCEPTED BY DISTRICT

PROJECT NAME AND SHEET DESCRIPTION:

PERMANENTE CREEK FLOOD PROTECTION PROJECT

RANCHO SAN ANTONIO SPOIL HAUL ROUTE PLAN

SCALE: NOT TO SCALE
VERIFY SCALES: 0 1"
BAR IS ONE INCH ON ORIGINAL DRAWING IF NOT ONE INCH ON THIS SHEET, ADJUST SCALES ACCORDINGLY

PROJECT NUMBER: 26244001
SHEET CODE: C-45
PAGE NUMBER: OF

DOCUMENT NUMBER: XXXX-X-0000-0000000.00

USERNAME: BillShad Tue 08 Jul 2008 09:32am
FILENAME: C:\pwworking\mm\external\mey4925A\dms24078\C-45

DESIGN NOTES:

SPECIFICATIONS:

DESIGN:

BRIDGE DESIGN SPECIFICATION (AASHTO LRFD BRIDGE DESIGN SPECIFICATIONS, 4TH EDITION WITH CALIFORNIA AMENDMENTS

LOAD GROUPS:

STRENGTH 1
SERVICE 1
WHERE D=DEAD LOAD
E=EARTH LOAD

STRENGTH REDUCTION FACTOR:

FLEXTURE=0.9
SHEAR = 0.85

SURCHARGE LOAD:

250 LBS/SQ FT

PEDESTRIAN LOAD:

100 LBS/SQ FT NO IMPACT

EARTH LOAD:

EARTH PRESSURES FOR TWO CONDITIONS:
100% SOIL UNIT WEIGHT VERTICAL, 30% SOIL UNIT WEIGHT HORIZONTAL.
100% SOIL UNIT WEIGHT VERTICAL. 100% SOIL UNIT WEIGHT HORIZONTAL, SOIL UNIT WEIGHT PER GEOTECHNICAL REPORT.

CAST-IN-PLACE REINFORCED CONCRETE:

f'c= 4500 psi
fy = 60,000 psi

PRECAST REINFORCED CONCRETE:

f'c= 5000 psi
fy = 65,000 psi

SHEAR:

MAXIMUM ALLOWABLE SHEAR, $v_c = 3.5\sqrt{f_c'}$ psi

EXCLUSIONS:

COMPRESSIVE REINFORCEMENT AND NEGATIVE-MOMENT REDUCTION (FOR CONTINUITY) DO NOT APPLY.

CONSTRUCTION NOTES:

CONSTRUCTION LOADS:

STRUTTING REQUIRED AS SHOWN ON CALTRANS STANDARD PLAN D88. STRUTTING MAY BE REQUIRED ON CULVERT EXTENSIONS WHEN EXISTING PARAPET IS REMOVED.

EXPANSION JOINTS:

INVERT:
NO EXPANSION JOINTS SHALL BE PERMITTED.

ROOF AND WALLS:
WHEN COVER IS LESS THAN SPAN LENGTH –
PLACE 1/2" PREMOLDED EXPANSION JOINT FILLER AT 30'-0" ± CENTERS OUTSIDE THE PAVED ROADWAY LANES AND PLACE BRIDGE DETAIL 3-2, CALTRANS STANDARD PLAN B0-3, AT 30'-0" CENTERS UNDER PAVED ROADWAY LANES.
WHEN COVER IS MORE THAN SPAN LENGTH –
PLACE 1/2" PREMOLDED EXPANSION JOINT FILLER AT 30'-0"± CENTERS AND ADDITIONAL 1/2" PREMOLDED EXPANSION JOINTS AT LOCATIONS OF CHANGE IN FOUNDATION CHARACTER, AS DIRECTED BY THE ENGINEER.

CONSTRUCTION JOINTS:

TEMPORARY JOINTS MAY BE PERMITTED IF NORMAL (OR RADIAL) TO ℄ OF RCB. OTHERWISE, THE CONTRACTOR IS TO SUBMIT A PROPOSAL FOR CONSIDERATION.

CUTOFF WALLS:

4'-0" CUTOFF WALLS ARE TO BE PROVIDED AT INLET AND/OR OUTLET UNLESS ADJACENT CHANNEL IS LINED AND UNLESS OTHERWISE SHOWN. THESE WALLS ARE TO BE EXTENDED IF SCOUR CONDITIONS WARRANT.

EARTHWORK:

SEE CALTRANS STANDARD PLAN A62E.

BACKFILL:

SEE CALTRANS STANDARD SPECIFICATIONS, EXCEPT THAT THE DIFFERENCE IN LEVEL OF BACKFILL (AGAINST OUTSIDE WALLS) SHALL NOT EXCEED 2'-0".

GENERAL NOTES:

DESIGNATION:

STANDARD SINGLE OR MULTIPLE BOX CULVERTS ARE SHOWN ON PLANS AS SPAN TIMES HEIGHT WITH MAXIMUM COVER OVER ROOF THUS: 8' X 5' RCB WITH 10' OR DBL 10' X 5' RCB WITH 20', FOLLOWED BY ALTERNATIVES.

ALTERNATIVES:

SINGLE CELL:
INVERT WILL BE SLOPED UNLESS "TRAPEZOIDAL INVERT", "FLAT INVERT" OR "V INVERT" IS INCLUDED IN DESIGNATION.

MULTIPLE CELL:
INVERT WILL BE VEE UNLESS "FLAT INVERT" IS SPECIFIED. ENDS OF CULVERT WILL BE ROUNDED UNLESS "SQUARE ENDS" ARE DESIGNATED. PARAPETS WILL BE AS SHOWN UNLESS DESIGNATED IN PLANS. SUCH DESIGNATIONS MAY BE DIFFERENT FOR INLET AND OUTLET ENDS.

QUANTITIES:

QUANTITIES ARE FOR THE SLOPED OR VEE INVERT AND DO NOT INCLUDE "D" BARS, NOR SPLICES IN LONGITUDINAL BARS, NOR TEMPERATURE REINFORCEMENT FOR EXPOSED ROOF, NOR CONCRETE OR REINFORCEMENT FOR PARAPETS, CUTOFF WALLS OR PAVING NOTCHES.

REINFORCEMENT PLACEMENT:

MAIN REINFORCEMENT IS TO BE PLACED TRANSVERSE OR, FOR CURVED CULVERTS, RADIAL. WHEN RADIAL, REINFORCING SPACING OF THE TRANSVERSE BARS IS MEASURED ALONG THE CENTERLINE. STAGGER SPLICES NOT SHOWN. HOOKS MAY BE ROTATED OR TILTED, AS NECESSARY, FOR CLEARANCE.

3 OR MORE CELLS:

FOR CULVERTS WITH MORE THAN TWO CELLS, USE DIMENSIONS AND REINFORCEMENT FOR THE STANDARD "DOUBLE BOX CULVERT" AND ADJUST QUANTITIES ACCORDINGLY.

REDUCED HALF SIZE (11X17)

USERNAME: BillShad Tue 08 Jul 2008 09:32am
FILENAME: C:\pwworking\hmm\external\mey49254\dms24102\S-1

DOCUMENT NUMBER: XXXX-X-0000-0000000.00

REV	DESCRIPTION	DATE	APPR.
A	30% REVIEW SUBMITTAL	11/11	TS
B	60% REVIEW SUBMITTAL	4/12	TS

REFERENCE INFORMATION AND NOTES

Hatch Mott MacDonald

DATE 04-16-12
DESIGN E T MORAN
DRAWN M WHITE
CHECKED A MILLER

ENGINEERING CERTIFICATION
REGISTERED PROFESSIONAL ENGINEER E.T. MORAN No. 49449 Exp. 9-30-12 CIVIL STATE OF CALIFORNIA
PROJECT ENGINEER DATE

Santa Clara Valley Water District
ACCEPTED BY DISTRICT

PROJECT NAME AND SHEET DESCRIPTION:
PERMANENTE CREEK FLOOD PROTECTION PROJECT
RANCHO SAN ANTONIO STRUCTURAL NOTES

SCALE NOT TO SCALE
VERIFY SCALES 0 1"
BAR IS ONE INCH ON ORIGINAL DRAWING IF NOT ONE INCH ON THIS SHEET, ADJUST SCALES ACCORDINGLY

PROJECT NUMBER 26244001
SHEET CODE: S-1
PAGE NUMBER: OF

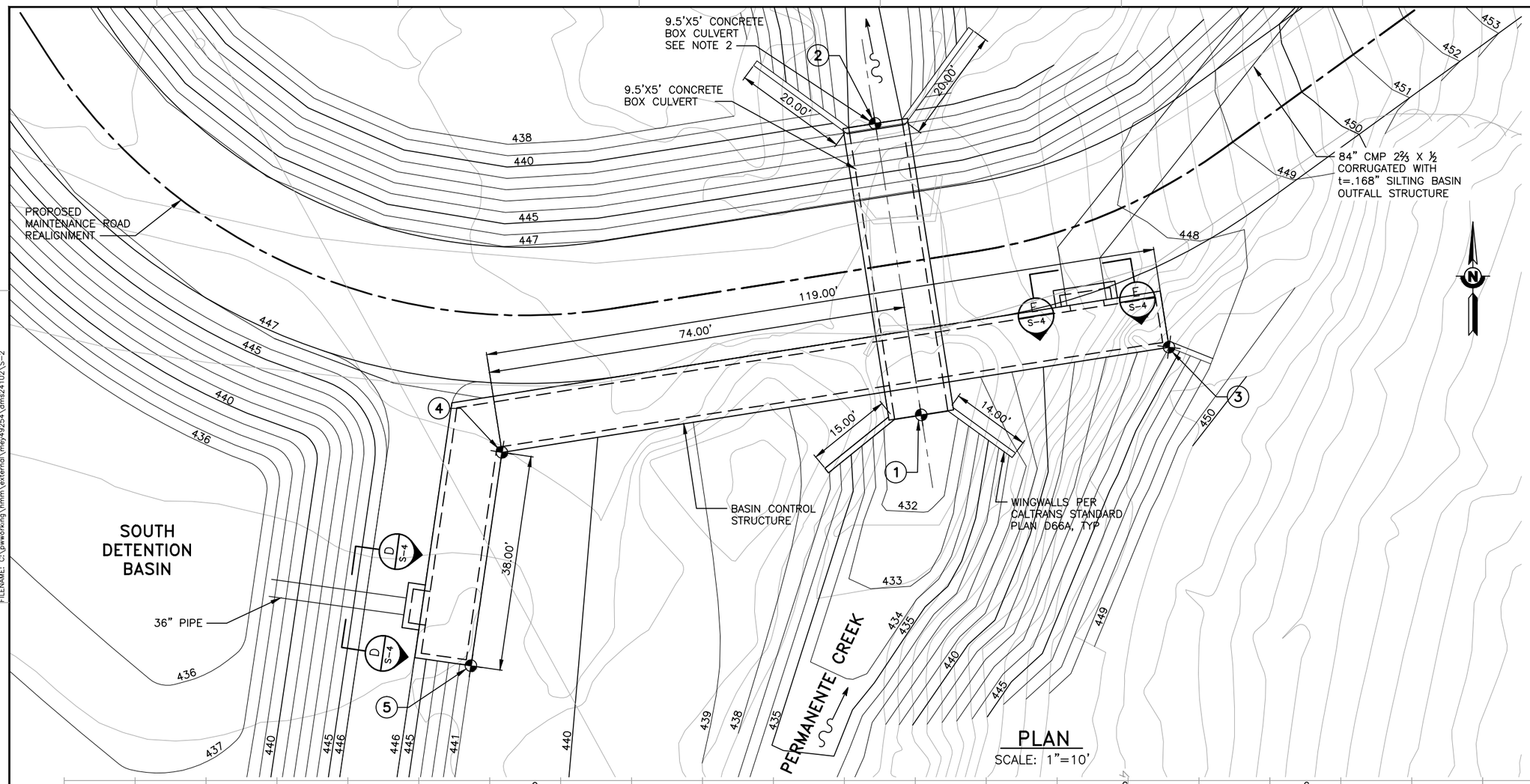

PLAN
SCALE: 1"=10'

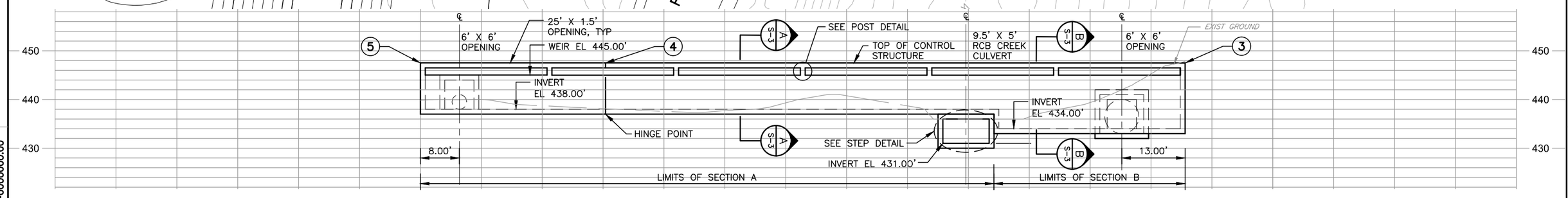

CONTROL STRUCTURE ELEVATION (SOUTH FACE)
SCALE: 1"=10' HORIZ
1"=10' VERT

REDUCED HALF SIZE (11X17)

CONTROL POINT DATA

POINT NO	COORDINATES	ELEVATION
POINT 1	N 1944810.315 E 6101375.746	INV EL 431.00
POINT 2	N 1944874.455 E 6101427.732	INV EL 429.95
POINT 3	N 1944838.480 E 6101475.214	
POINT 4	N 1944820.529 E 6101361.075	
POINT 5	N 1944789.230 E 6101363.747	

NOTES

1.) CLEAR DISTANCE IS 2 INCHES UNLESS OTHERWISE SHOWN.

2.) RCB PER CALTRANS STANDARD PLAN D80 USE 10' X 5' TABLE VALVES

GENERAL NOTES

CONCRETE: F'C= 4500 PSI
FY= 60000 PSI

LIVE LOAD: 100 PSF PEDESTRIAN LOADING

TRUCK SURCHARGE: 250 PSF

SOIL LOAD: EFP = 55 PCF

WATER LOAD: 62.4 PCF

REV	DESCRIPTION	DATE	APPR.
A	30% DESIGN SUBMITTAL	11/11	TS
B	60% REVIEW SUBMITTAL	04/12	TS

REFERENCE INFORMATION AND NOTES

Hatch Mott MacDonald

DATE 04-16-12
DESIGN E T MORAN
DRAWN D BARNHART
CHECKED A MILLER

ENGINEERING CERTIFICATION
REGISTERED PROFESSIONAL ENGINEER "E.T. MORAN" No. 49449 Exp. 9-30-12 CIVIL STATE OF CALIFORNIA
PROJECT ENGINEER DATE

Santa Clara Valley Water District
ACCEPTED BY DISTRICT

PROJECT NAME AND SHEET DESCRIPTION:
PERMANENTE CREEK FLOOD PROTECTION PROJECT
RANCHO SAN ANTONIO DIVERSION STRUCTURE PLAN AND ELEVATION

SCALE: AS SHOWN
VERIFY SCALES 0 1"
BAR IS ONE INCH ON ORIGINAL DRAWING IF NOT ONE INCH ON THIS SHEET, ADJUST SCALES ACCORDINGLY

PROJECT NUMBER 26244001
SHEET CODE: S-2
PAGE NUMBER: OF

DOCUMENT NUMBER: XXXX-X-0000-0000000.00

USERNAME: BillShad Tue 08 Jul 2008 09:32am
FILENAME: C:\pwworking\mm\external\mey49254\dms24102\S-2

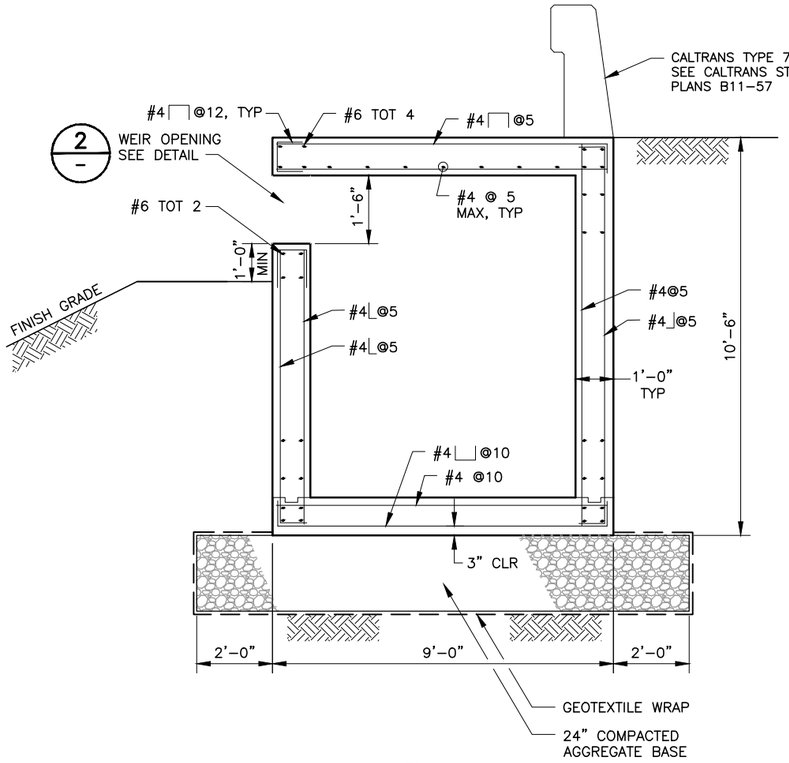

SECTION A S-3 TYPICAL SECTION A
1/2" = 1'-0"

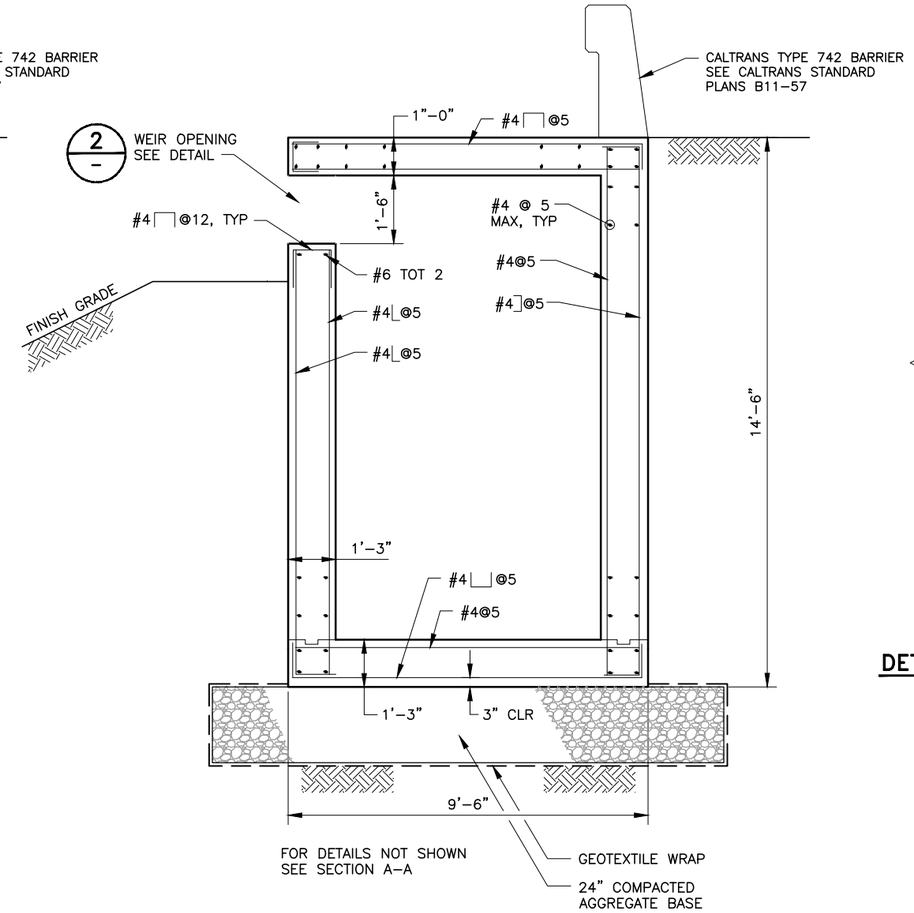

SECTION B S-3 TYPICAL SECTION B
1/2" = 1'-0"

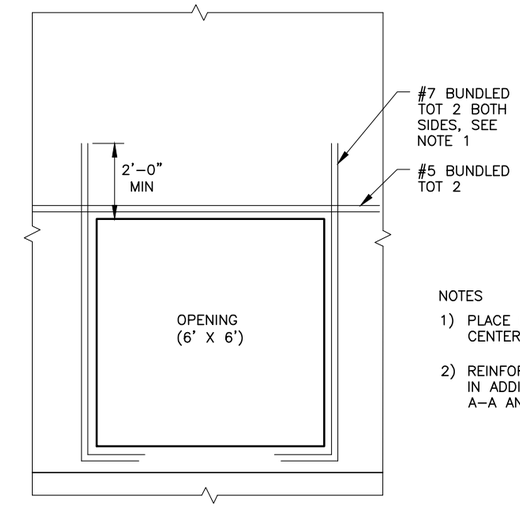

NOTES

1) PLACE REINFORCEMENT IN CENTER OF WALL

2) REINFORCEMENT SHOWN IS IN ADDITION TO SECTION A-A AND B-B

DETAIL 1 S-2 CULVERT OPENING DETAIL
1/2" = 1'-0"

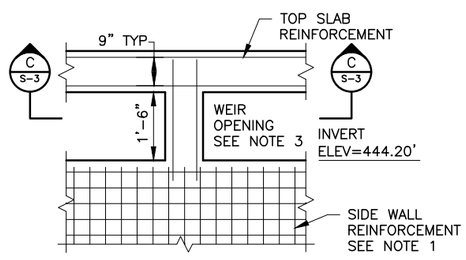

DETAIL 2 S-2 POST DETAIL
1/2" = 1'-0"

NOTES

1) SIDEWALL REINFORCEMENT SHALL NOT PENETRATE INTO POST SECTION

2) CLR DISTANCE = 2" UNLESS OTHERWISE NOTED

3) PROVIDE FRAME/GRATE AT WEIR OPENING WITH VERTICAL BARS IN FRAME @ 4" OC

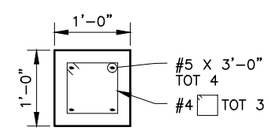

SECTION C S-3 POST SECTION
1" = 1'-0"

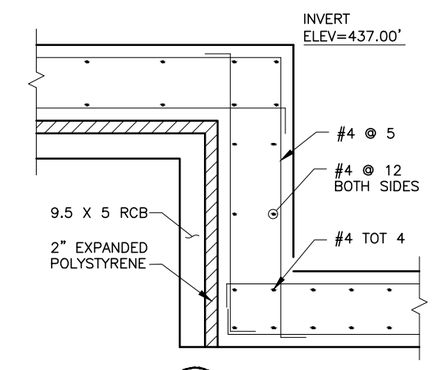

DETAIL 3 S-2 STEP DETAIL
1" = 1'-0"

REDUCED HALF SIZE (11X17)

REV	DESCRIPTION	DATE	APPR.
A	30% REVIEW SUBMITTAL	11/14	TS
B	60% REVIEW SUBMITTAL	04/12	TS

REFERENCE INFORMATION AND NOTES

Hatch Mott MacDonald

DATE 04-16-12
DESIGN E T MORAN
DRAWN D BARNHART
CHECKED A MILLER

ENGINEERING CERTIFICATION
REGISTERED PROFESSIONAL ENGINEER E. T. MORAN No. 49449 Exp. 9-30-12 CIVIL STATE OF CALIFORNIA
PROJECT ENGINEER DATE

Santa Clara Valley Water District
ACCEPTED BY DISTRICT

PROJECT NAME AND SHEET DESCRIPTION:
PERMANENTE CREEK
FLOOD PROTECTION PROJECT
RANCHO SAN ANTONIO
CONTROL STRUCTURE
SECTIONS AND DETAILS

SCALE AS SHOWN
VERIFY SCALES 0 1"
BAR IS ONE INCH ON ORIGINAL DRAWING IF NOT ONE INCH ON THIS SHEET, ADJUST SCALES ACCORDINGLY

PROJECT NUMBER 26244001
SHEET CODE: S-3
PAGE NUMBER: OF

DOCUMENT NUMBER: XXXX-X-0000-0000000.00

USERNAME: BillShad Tue 08 Jul 2008 09:32am
FILENAME: C:\pwworking\mrm\external\mey49254\dms24102\S-3

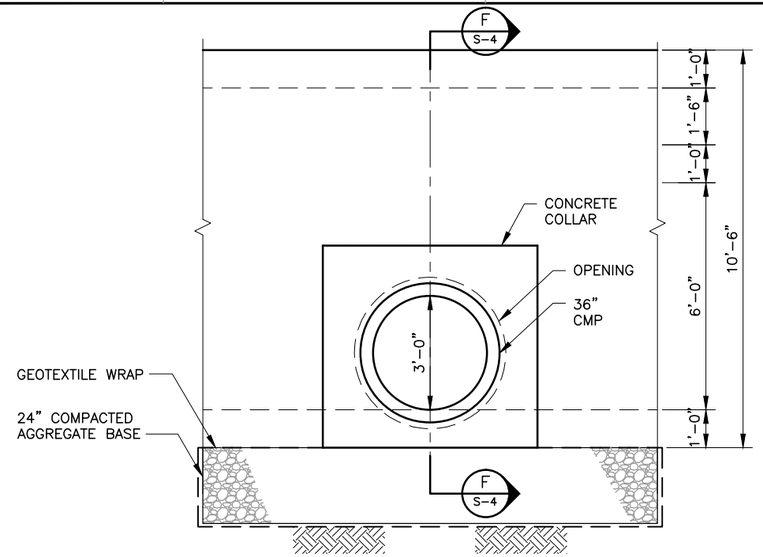

VIEW D S-4 **36" OPENING**
1/2" = 1'-0"

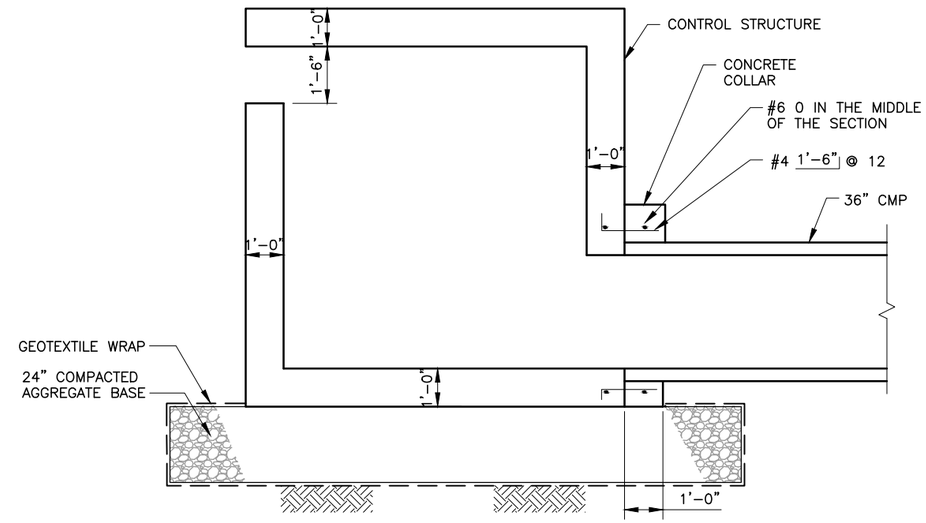

SECTION F S-4 **36" PIPE CONNECTOR**
1/2" = 1'-0"

NOTES

1) REINFORCEMENT IS IN ADDITION TO CONTROL STRUCTURE REINFORCING SHOW IN SECTION A–A & B–B

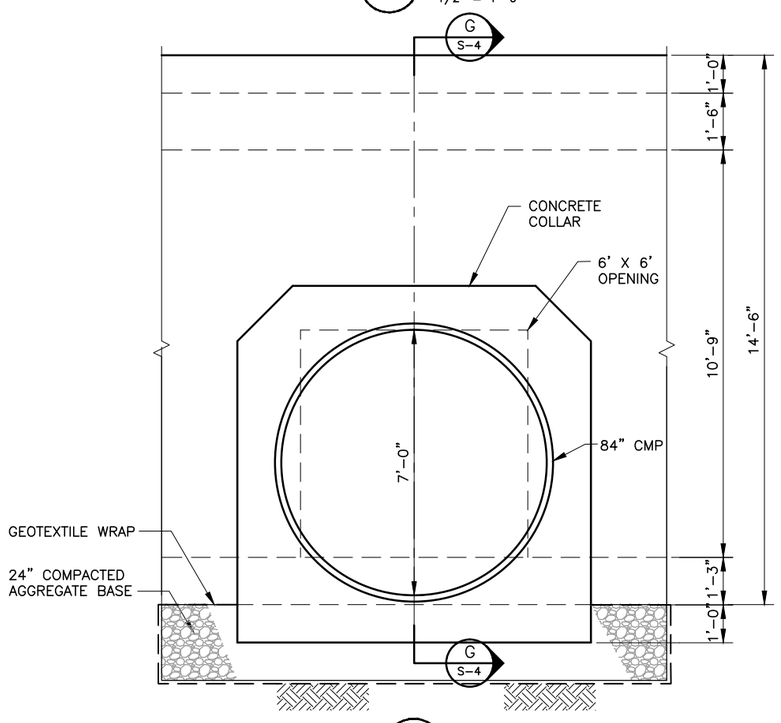

VIEW E S-4 **84" OPENING**
1/2" = 1'-0"

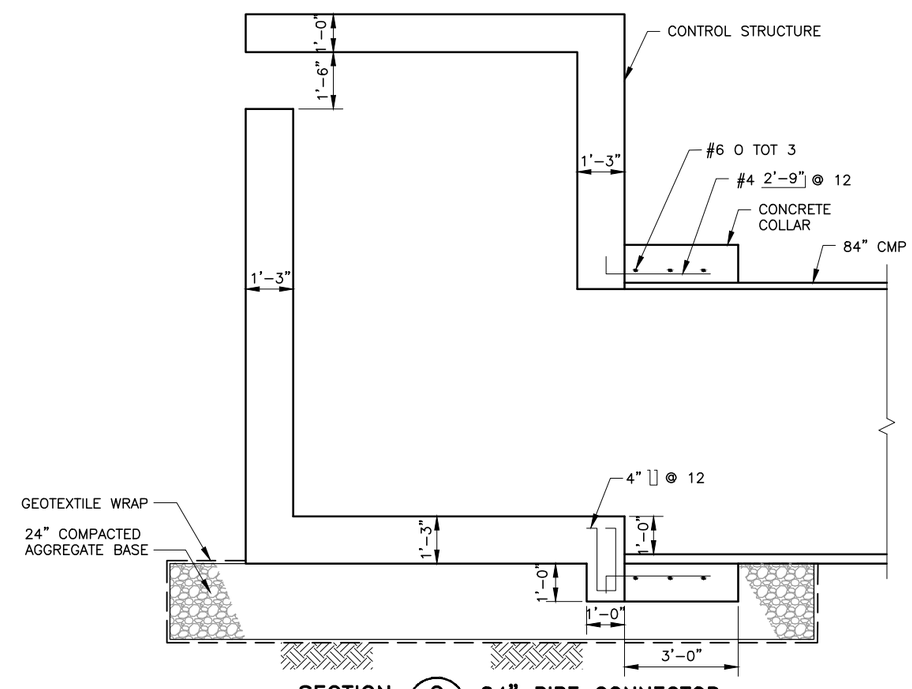

SECTION G S-4 **84" PIPE CONNECTOR**
1/2" = 1'-0"

REDUCED HALF SIZE (11X17)

REV	DESCRIPTION	DATE	APPR.
A	30% REVIEW SUBMITTAL	11/14	TS
B	60% REVIEW SUBMITTAL	4/12	TS

REFERENCE INFORMATION AND NOTES

Hatch Mott MacDonald

DATE 04-16-12
DESIGN E T MORAN
DRAWN D BARNHART
CHECKED A MILLER

ENGINEERING CERTIFICATION
REGISTERED PROFESSIONAL ENGINEER E.T. MORAN No. 49449 Exp. 9-30-12 CIVIL STATE OF CALIFORNIA
PROJECT ENGINEER DATE

Santa Clara Valley Water District
ACCEPTED BY DISTRICT

PROJECT NAME AND SHEET DESCRIPTION:
PERMANENTE CREEK FLOOD PROTECTION PROJECT
RANCHO SAN ANTONIO CONTROL STRUCTURE SECTIONS AND DETAILS

SCALE 1/2" = 1'-0"
VERIFY SCALES 0 1"
BAR IS ONE INCH ON ORIGINAL DRAWING IF NOT ONE INCH ON THIS SHEET, ADJUST SCALES ACCORDINGLY

PROJECT NUMBER 26244001
SHEET CODE: S-4
PAGE NUMBER: OF

DOCUMENT NUMBER: XXXX-X-0000-0000000.00

USERNAME: BRISHAD Tue 08 Jul 2008 09:32am
FILENAME: C:\pwworking\hmm\external\mey49254\dms24102\S-4

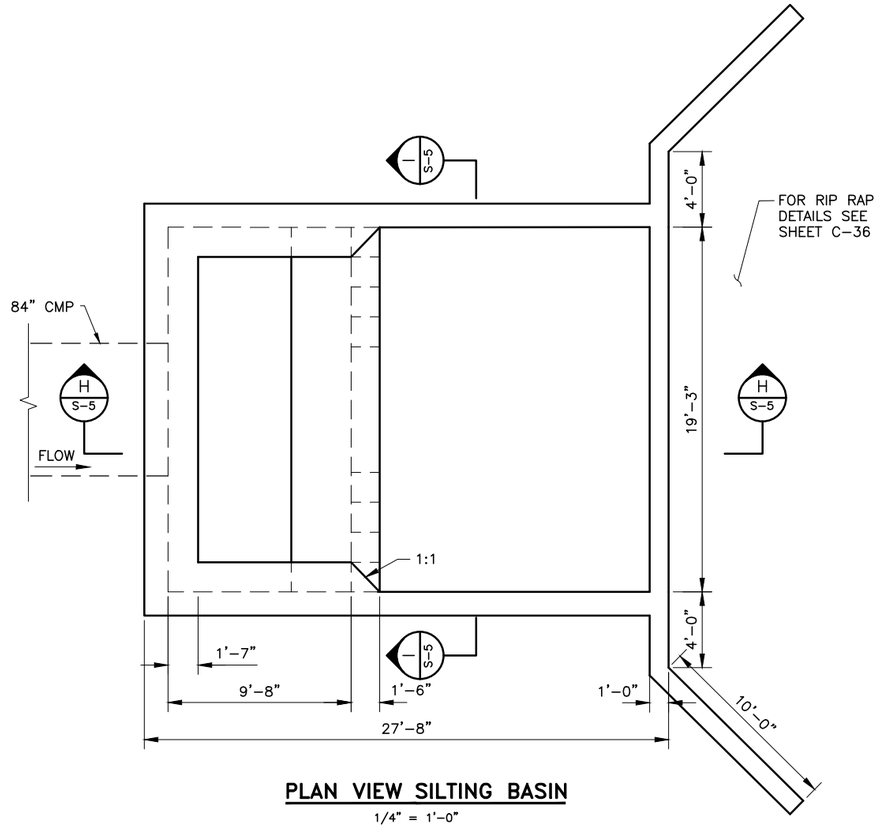

PLAN VIEW SILTING BASIN

1/4" = 1'-0"

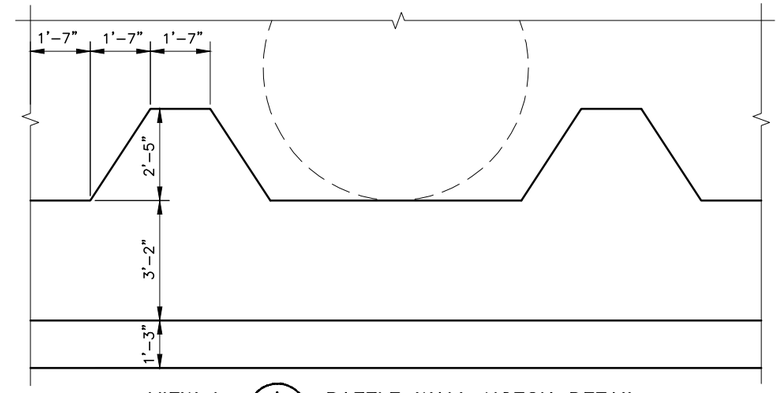

VIEW I (I / S-5) BAFFLE WALL NOTCH DETAIL

1/2" = 1'-0"

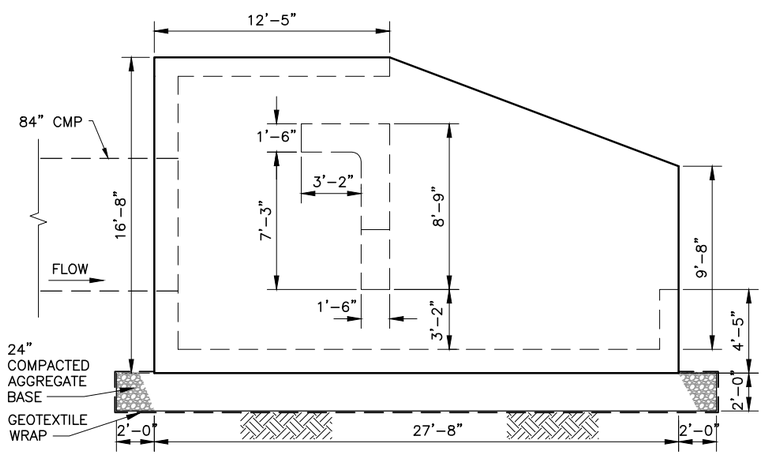

ELEVATION SILTING BASIN

1/4" = 1'-0"

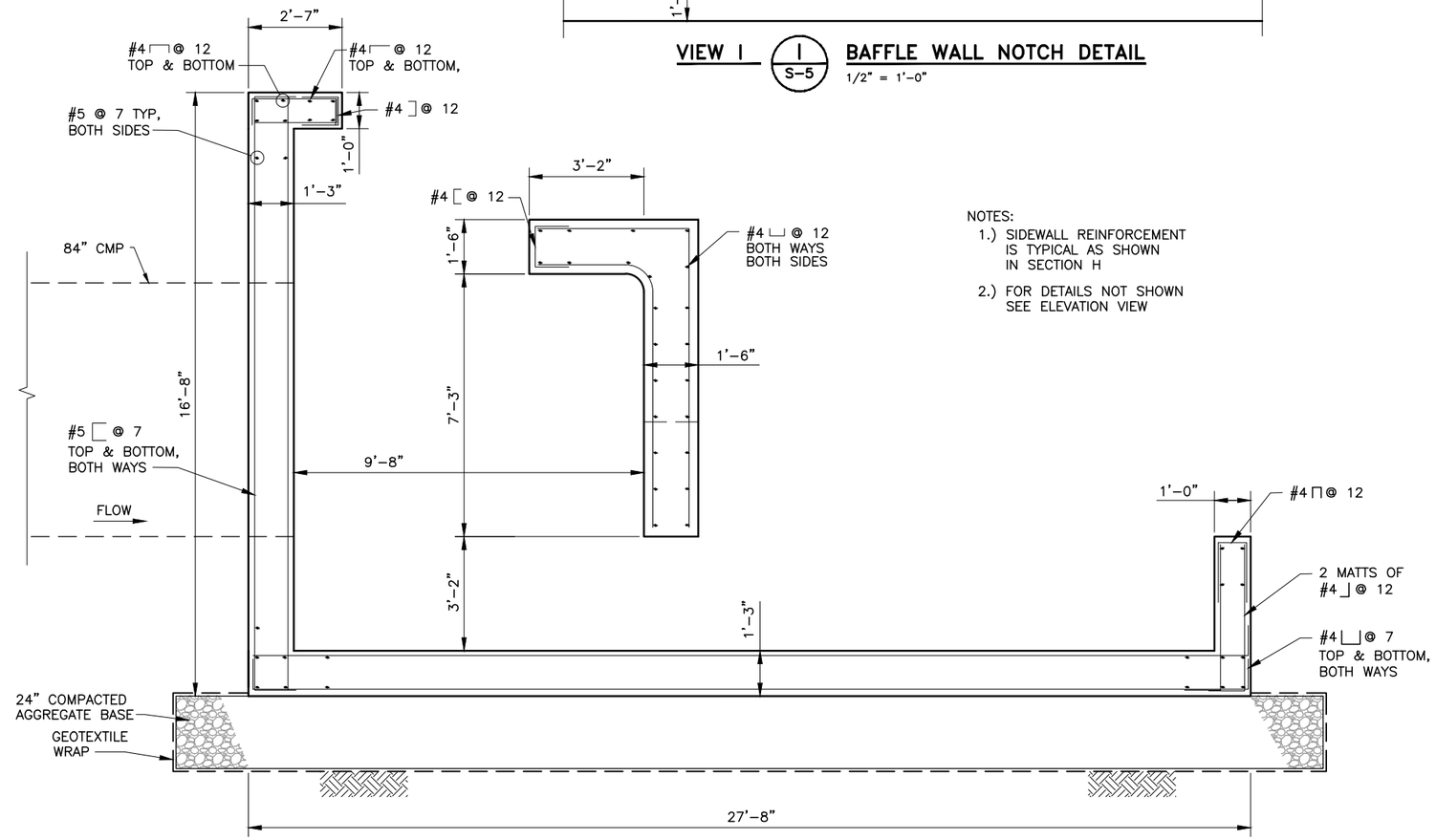

NOTES:

1.) SIDEWALL REINFORCEMENT IS TYPICAL AS SHOWN IN SECTION H

2.) FOR DETAILS NOT SHOWN SEE ELEVATION VIEW

SECTION (H / S-5) SILTING BASIN

1/2" = 1'-0"

REDUCED HALF SIZE (11X17)

REV	DESCRIPTION	DATE	APPR.
A	30% REVIEW SUBMITTAL	11/14	TS
B	60% REVIEW SUBMITTAL	4/12	TS

REFERENCE INFORMATION AND NOTES

Hatch Mott MacDonald

DATE 04-16-12
DESIGN E T MORAN
DRAWN D BARNHART
CHECKED A MILLER

ENGINEERING CERTIFICATION

REGISTERED PROFESSIONAL ENGINEER "E.T. MORAN" No. 49449 Exp. 9-30-12 CIVIL STATE OF CALIFORNIA

PROJECT ENGINEER DATE

Santa Clara Valley Water District

ACCEPTED BY DISTRICT

PROJECT NAME AND SHEET DESCRIPTION:

PERMANENTE CREEK FLOOD PROTECTION PROJECT

RANCHO SAN ANTONIO
IMPACT SILTING BASIN
PLAN, SECTIONS AND DETAILS

SCALE: AS SHOWN

VERIFY SCALES: 0 — 1"
BAR IS ONE INCH ON ORIGINAL DRAWING IF NOT ONE INCH ON THIS SHEET, ADJUST SCALES ACCORDINGLY

PROJECT NUMBER: 26244001

SHEET CODE: S-5

PAGE NUMBER: OF

DOCUMENT NUMBER: XXXX-X-0000-0000000.00

USERNAME: BillShad Tue 08 Jul 2008 09:32am
FILENAME: C:\pwworking\mrm\external\mey49254\dms24102\S-5

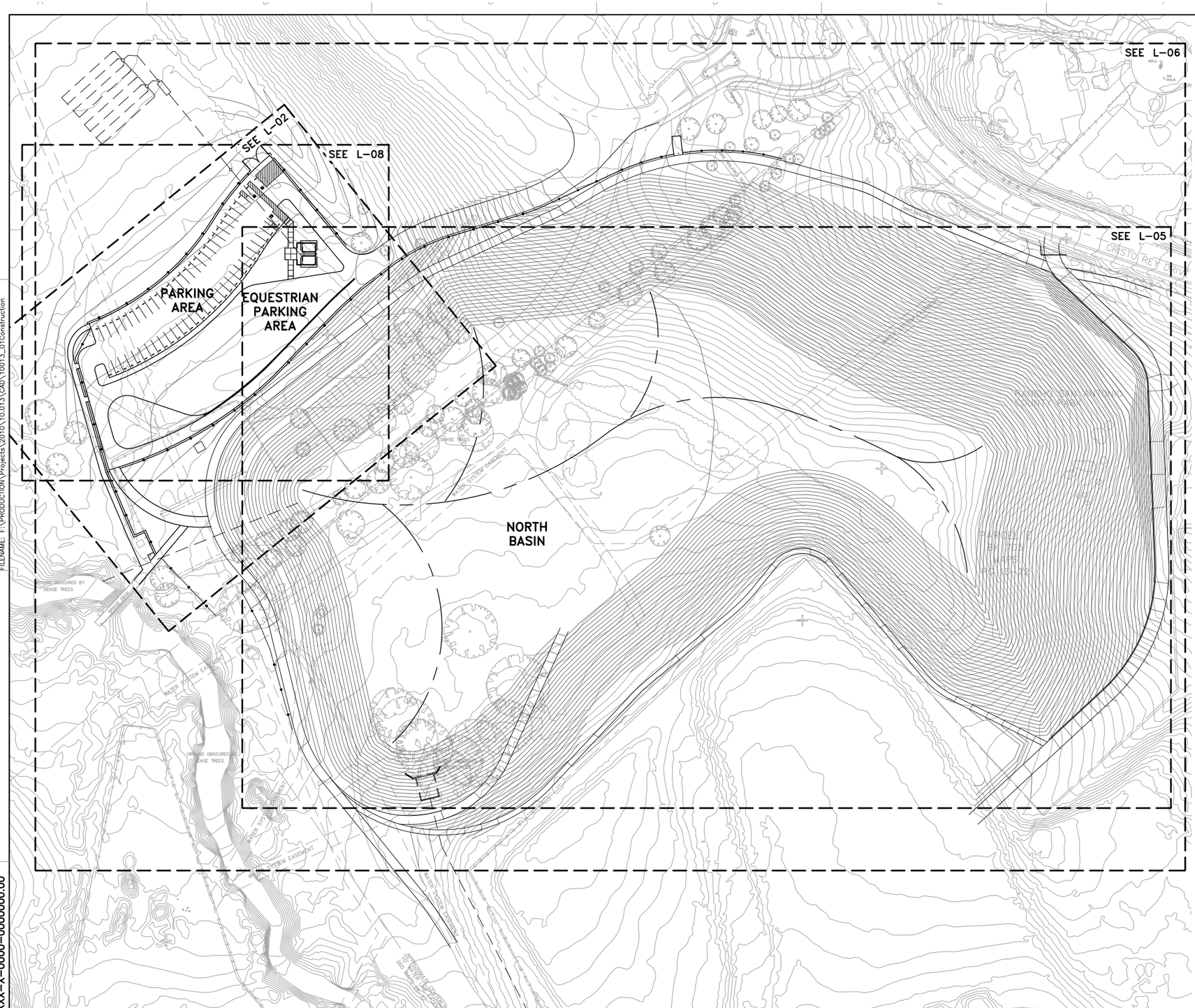

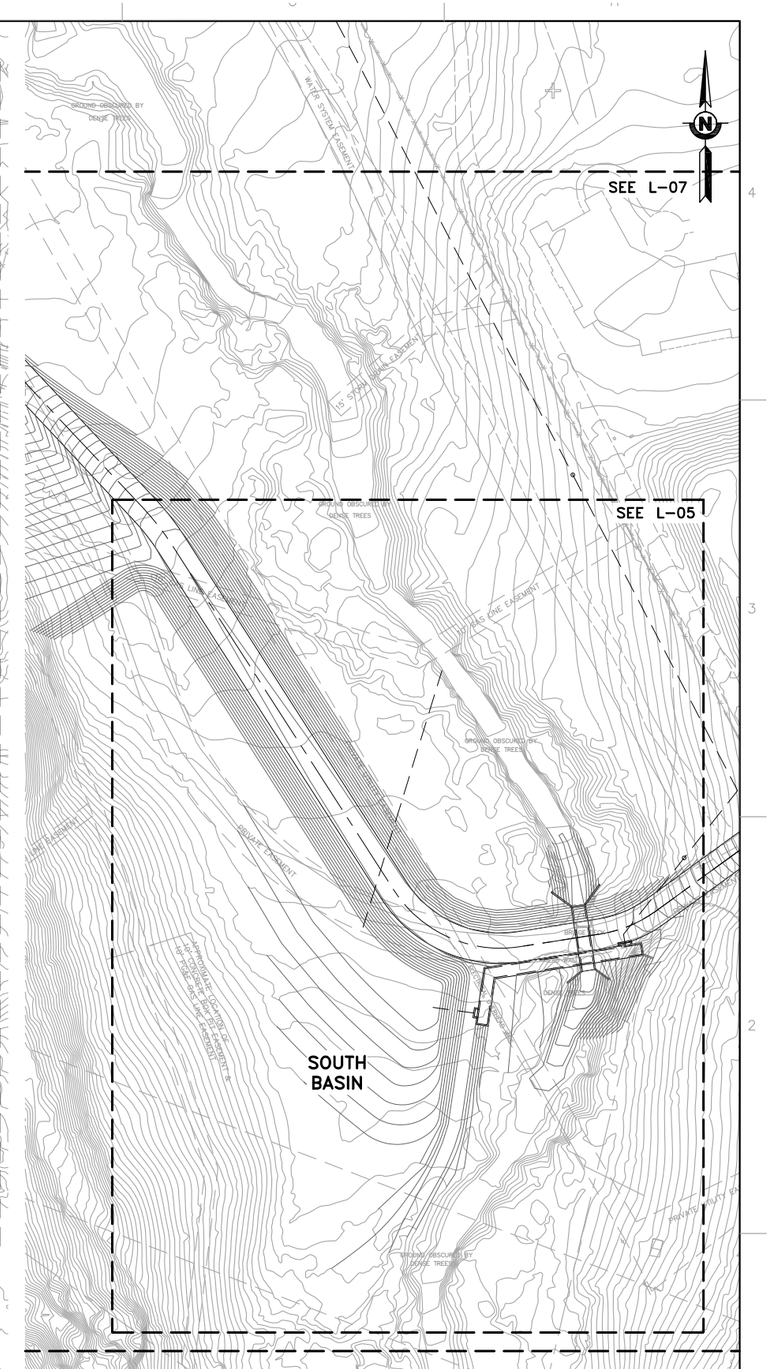

REDUCED HALF SIZE (11X17)

USERNAME:
FILENAME: F:\PRODUCTION\Projects\2010\10.013\CAD\10013_01Construction

DOCUMENT NUMBER: XXXX-X-0000-0000000.00

REV	DESCRIPTION	DATE	APPR.
A	30% REVIEW SUBMITTAL	11/14	TS
B	60% REVIEW SUBMITTAL	4/16	TS

REFERENCE INFORMATION AND NOTES

bellinger foster steinmetz
425 Pacific Street, Suite 201
Monterey, CA 93940
PH 831.646.1383
www.bfsla.com

DATE 4-16-12
DESIGN A. PAL
DRAWN K. BISSETT
CHECKED X.X.

ENGINEERING CERTIFICATION
PROJECT ENGINEER 11/11/11

Santa Clara Valley Water District
ACCEPTED BY DISTRICT

PROJECT NAME AND SHEET DESCRIPTION:
PERMANENTE CREEK FLOOD PROTECTION PROJECT
RANCHO SAN ANTONIO KEY PLANS

SCALE 1" = 60'
VERIFY SCALES 0 1"
BAR IS ONE INCH ON ORIGINAL DRAWING IF NOT ONE INCH ON THIS SHEET, ADJUST SCALES ACCORDINGLY

PROJECT NUMBER 26244001
SHEET CODE: L-01
SHEET NUMBER: OF

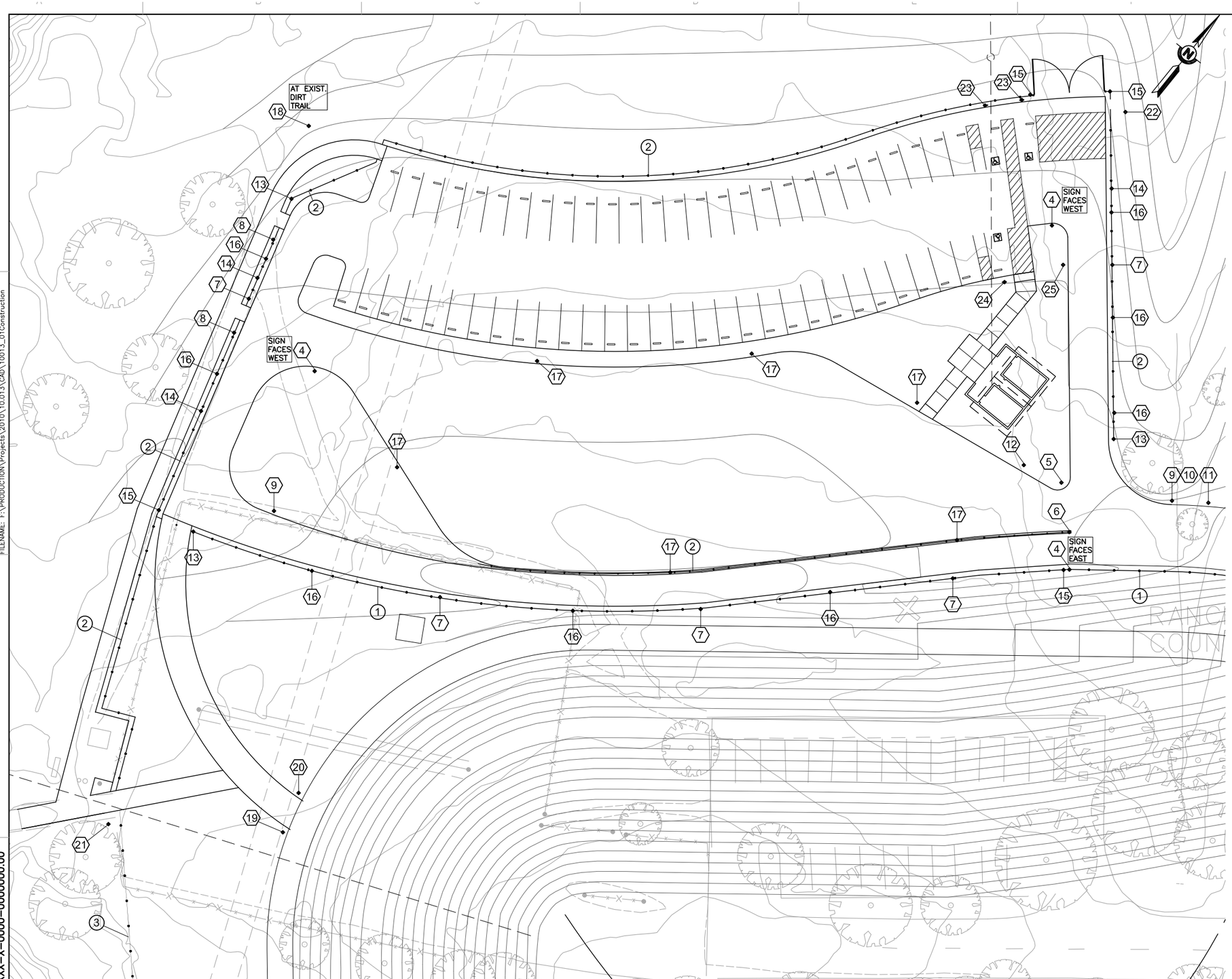

REFERENCE NOTES

1. FENCE TYPE–1. SEE DETAIL–1, SHEET L–09
2. FENCE TYPE–2. SEE DETAIL–2, SHEET L–09
3. FENCE TYPE–3. SEE DETAIL–3, SHEET L–09
4. FENCE–POST SIGN (DO NOT ENTER). SEE DETAIL–4 SHEET L–09
5. POST SIGN (TRAILERS/CARS DIRECTIONS). SEE DETAIL–4 SHEET L–09
6. FENCE–POST SIGN (EQUESTRIAN/NO CARS). SEE DETAIL–4 SHEET L–09
7. FENCE–RAIL SIGN (ONE–WAY LEFT ARROW). SEE DETAIL–5 SHEET L–09
8. FENCE–POST SIGN (EXIT WITH ARROW). SEE DETAIL–4 SHEET L–09
9. POST SIGN (SPEED LIMIT 15MPH). SEE DETAIL–4 SHEET L–09
10. POST SIGN (PARK HOURS / NO SMOKING). SEE DETAIL–4 SHEET L–09
11. POST SIGN (PARK USER RESPONSIBILITY). SEE DETAIL–4 SHEET L–09
12. POST SIGN (EQUESTRIAN WASTE MGMT). SEE DETAIL–4 SHEET L–09
13. FENCE–POST SIGN (NO PARKING LEFT ARROW). SEE DETAIL–4 SHEET L–09
14. FENCE–POST SIGN (NO PARKING NO ARROW). SEE DETAIL–4 SHEET L–09
15. FENCE–POST SIGN (NO PARKING RIGHT ARROW). SEE DETAIL–4 SHT. L–09
16. FENCE–RAIL SIGN (FIRE LANE). SEE DETAIL–5 SHEET L–09
17. POST SIGN (EQUESTRIAN PARKING ONLY). SEE DETAIL–4 SHEET L–09
18. POST SIGN (PARK REGULATIONS) RELOCATED. SEE DETAIL–6 SHEET L–09
19. POST SIGN (TRAIL REGULATIONS) RELOCATED. SEE DETAIL–6 SHEET L–09
20. POST SIGN (TRAIL CONNECTIONS) RELOCATED. SEE DETAIL–6 SHEET L–09
21. SMALL POST SIGN (TRAIL DIRECTIONS). PRESERVE AND PROTECT
22. SMALL POST SIGN (NO HORSES). RELOCATED.
23. POST SIGN (ADA PARKING & $250 FINE). SEE SPECS. SEE DETAIL–4 SHEET L–09
24. POST SIGN (ADA PARKING VAN ACCESSIBLE & $250 FINE). SEE SPECS. SEE DETAIL–4 SHEET L–09
25. POST SIGN (TOW AWAY). SEE SPECS. SEE DETAIL–4 SHEET L–09

GENERAL NOTES

1. ACCESSIBLE PARKING STALLS SHALL BE IN COMPLIANCE WITH CBC 1129B ACCESSIBLE PARKING REQUIRED.

REDUCED HALF SIZE (11X17)

USERNAME:
FILENAME: F:\PRODUCTION\Projects\2010\10.013\CAD\10013_01Construction

DOCUMENT NUMBER: XXXX–X–0000–0000000.00

REV	DESCRIPTION	DATE	APPR.
A	30% REVIEW SUBMITTAL	11/14	TS
B	60% REVIEW SUBMITTAL	4/16	TS

REFERENCE INFORMATION AND NOTES

bellinger foster steinmetz
425 Pacific Street, Suite 201
Monterey, CA 93940
PH 831.646.1383
www.bfsla.com

DATE 4–16–12
DESIGN A. PAL
DRAWN K. BISSETT
CHECKED X.X.

ENGINEERING CERTIFICATION
PROJECT ENGINEER DATE

Santa Clara Valley Water District
ACCEPTED BY DISTRICT

PROJECT NAME AND SHEET DESCRIPTION:
PERMANENTE CREEK
FLOOD PROTECTION PROJECT
RANCHO SAN ANTONIO
FENCING & SIGNAGE PLAN – PARKING LOT

SCALE 1" = 20'
VERIFY SCALES 0 1"
BAR IS ONE INCH ON ORIGINAL DRAWING IF NOT ONE INCH ON THIS SHEET, ADJUST SCALES ACCORDINGLY

PROJECT NUMBER 26244001
SHEET CODE: L–02
SHEET NUMBER: OF

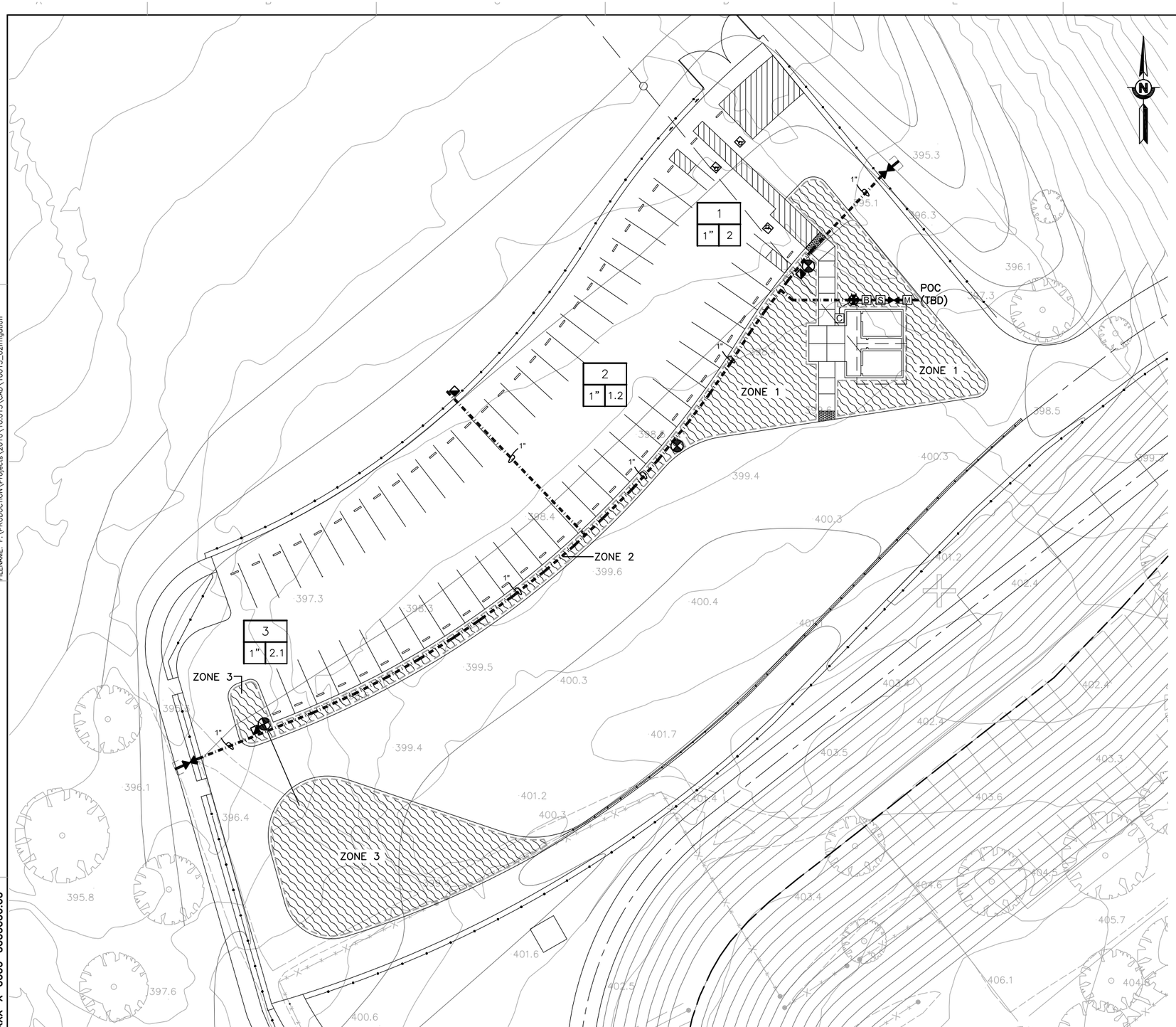

LEGEND

SYMBOL	MANUFACTURER	DESCRIPTION
X — Valve Station; X X — GPM; Valve Size		
		MAIN LINE: 24" MINIMUM COVER. SCH. PER SPECS. SEE PLAN FOR SIZES.
		LATERAL LINE / DRIP IRRIGATION SUPPLY LINE: 18" MINIMUM COVER, 24" UNDER ASPHALT PAVING SCH. 40. SEE CHART FOR SIZE.
		STUB OUT: SEE IRRIGATION DETAILS
	RAINBIRD	44–LRC QUICK COUPLER
	KING BROTHERS (KBI)	FULL PORT, TRUE UNION, PVC BALL VALVE: LINE SIZE
M		WATER METER 3/4". SEE GENERAL NOTE.2
B	FEBCO	3/4" BACKFLOW PREVENTER 825YA W/ BRONZE WYE STRAINER
S	WILKINS	YB–SERIES STRAINER. LINE SIZE.
C	TBD	CONTROLLER
	SUPERIOR (MV) / DATA INDUSTRIAL (FS)	1" – 3100 NORMALLY OPEN MASTER VALVE W/ FM–1B FLOW SENSOR. CONNECT TO CONTROLLER.
		1" CONDUIT: 24" DEPTH MINIMUM. FOR MASTER VALVE & FLOW SENSOR WIRE AND DEDICATED COMMON.
POC		POINT OF CONNECTION
VIF / TBD		VERIFY IN FIELD / TO BE DECIDED
UON		UNLESS OTHERWISE NOTED

LEGEND – DRIP IRRIGATION

SYMBOL	MANUFACTURER	DESCRIPTION
ZONE X		TYPE–1 (POINT–SOURCE): 3/4" SUPPLY PIPE &1/2" DISTRIBUTION PIPE W/ FLUSH PORTS. SEE DRIP IRRIGATION TYPICAL LAYOUT BELOW. SEE SPECS. SEE IRRIGATION DETAILS. EMITTERS: 0.5 GPH PRESSURE COMPENSATING EMITTER. SALCO PRO–SPEC / TORO LOW–FLOW BUBBLER, 1/2" FPT.
	RAINBIRD / HUNTER / TORO	PEB / ICV / P–220 REMOTE CONTROL VALVE: SIZE AS SHOWN ON PLAN.
	NETAFIM / TORO	DISC FILTER, 140–150 MESH: NETAFIM 1" / TORO 3/4" @ 1" VALVES.
	NETAFIM / TORO	PRESSURE REGULATOR VALVE, 25 PSI PRESET: NETAFIM 3/4" HF / TORO 3/4" MF AT 1" VALVES > 4.5 GPM. NETAFIM 3/4" LF / TORO 3/4" LF AT 1" VALVES < 4.5 GPM.

DRIP IRRIGATION TYPE–1 TYPICAL SCHEMATIC DIAGRAM

See planting plan for plant sizes and locations. Supply pipe spacing per planting. Place distribution pipes + emitters along supply pipe per planting and per the Emitter Schedule. Locate emitters to allow for additional ports to each plant for future needs. Place emitters towards the uphill side of plants on slopes.

EMITTER SCHEDULE	
1 gal.	1
5 gal.	2
15 gal.	4
24" box	8

TYPICAL LAYOUT

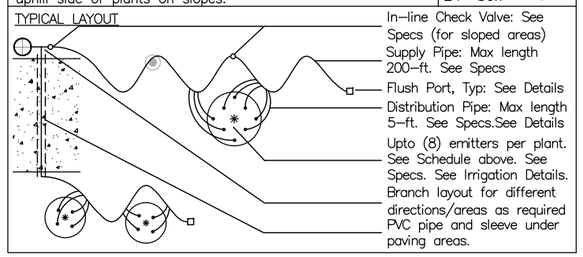

REDUCED HALF SIZE (11X17)

USERNAME:
FILENAME: F:\PRODUCTION\Projects\2010\10.013\CAD\10013_02Irrigation

DOCUMENT NUMBER: XXXX–X–0000–0000000.00

REV	DESCRIPTION	DATE	APPR.
A	30% REVIEW SUBMITTAL	11/14	TS
B	60% REVIEW SUBMITTAL	4/16	TS

REFERENCE INFORMATION AND NOTES

bellinger foster steinmetz
425 Pacific Street, Suite 201
Monterey, CA 93940
PH 831.646.1383
www.bfsla.com

DATE 4–16–12
DESIGN A. Pal
DRAWN K. Bissett
CHECKED L.Foster

ENGINEERING CERTIFICATION
PROJECT ENGINEER DATE

Santa Clara Valley Water District
ACCEPTED BY DISTRICT

PROJECT NAME AND SHEET DESCRIPTION:

PERMANENTE CREEK FLOOD PROTECTION PROJECT

RANCHO SAN ANTONIO IRRIGATION PLAN – PARKING LOT

SCALE 1" = 20'
VERIFY SCALES 0 1"
BAR IS ONE INCH ON ORIGINAL DRAWING IF NOT ONE INCH ON THIS SHEET, ADJUST SCALES ACCORDINGLY

PROJECT NUMBER 26244001
SHEET CODE: L–03
SHEET NUMBER: OF

GENERAL NOTES

1. GUARANTEE:
GUARANTEE THE IRRIGATION SYSTEM FOR ONE YEAR FROM DATE OF ACCEPTANCE.

2. VERIFICATION:
SYSTEM DESIGN IS BASED ON 30 P.S.I. AND 10 G.P.M. REQUIRED AT DISCHARGE OUTLET OF METER. VERIFY SAME AND NOTIFY ENGINEER IF SUCH DATA ADVERSELY AFFECTS THE OPERATION OF THE SYSTEM. SUCH NOTICE SHALL BE MADE IN WRITING AND PRIOR TO COMMENCING ANY IRRIGATION WORK.

3. UTILITIES:
VERIFY LOCATION OF ALL ON-SITE UTILITIES. RESTORATION OF DAMAGED UTILITIES SHALL BE MADE TO THE SATISFACTION OF THE OWNER, AND AT NO ADDITIONAL COST TO THE OWNER.

4. SCHEMATIC:
SYSTEM FEATURES ARE SHOWN SCHEMATICALLY FOR GRAPHIC CLARITY. INSTALL ALL PIPING AND VALVES IN COMMON TRENCHES WHERE FEASIBLE AND INSIDE PLANTING AREAS ADJACENT TO WALKWAYS AND INSIDE MEDIANS WHENEVER POSSIBLE.

5. SPECIFICATIONS:
SEE IRRIGATION SPECIFICATIONS FOR ADDITIONAL INFORMATION.

6. CODES:
IRRIGATION SYSTEM SHALL BE INSTALLED IN ACCORDANCE WITH ALL LOCAL CODES AND MANUFACTURER'S SPECIFICATIONS. NOTIFY ENGINEER BY TELEPHONE AND IN WRITING OF ANY CONFLICTS PRIOR TO INSTALLATION.

7. QUICK COUPLING VALVES:
INSTALL ON DOUBLE SWING JOINT. LOCATE 12" AWAY FROM EDGE OF WALKS, WALLS, CURBS, AND HEADERBOARDS WITHIN PLANTING AREAS. PROVIDE ONE SWIVEL, HOSE ELL.

8. CHECK VALVES:
INSTALL IN-HEAD CHECK VALVES FOR SPRINKLERS, AND IN-LINE CHECK VALVES IN DRIP IRRIGATION SUPPLY LINES, AS REQUIRED TO MINIMIZE LINE DRAINAGE. ALLOW IN BID PRICE AN AMOUNT SUFFICIENT TO PROVIDE AND INSTALL ADDITIONAL CHECK VALVES TO ACCOMMODATE ANY NECESSARY FIELD CHANGES.

9. SLEEVING:
ADEQUATELY SIZE SCH. 40 PIPE FOR ALL WIRING AND IRRIGATION LINES INSTALLED UNDER PAVING AREAS AND THAT PASS THROUGH DRAINAGE TRENCHES WITH DRAIN ROCK. INSTALL (WITH ENDS CLEARLY MARKED ABOVE GRADE) AT THE NECESSARY DEPTH PRIOR TO THE CONSTRUCTION OF PAVING AREAS OR FIELD BASES. SLEEVING TO EXTEND 12" FROM EDGE OF PAVING OR DRAINAGE TRENCH INTO ADJACENT SUBGRADE. NO UNSLEEVED PIPING, ANGLE-BENDS, 90-DEGREE BENDS, OR JOINTS SHALL BE ALLOWED UNDER PAVING.

15. DRIP VALVES
GROUP DRIP VALVE RUN TIMES TOGETHER TO ENSURE A MINIMUM FLOW OF X GPM AS REQUIRED BY THE FLOW SENSOR.

16. DRIP IRRIGATION
SUB-SURFACE DRIPPER LINE ROWS ARE SHOWN FOR ILLUSTRATION ONLY. AVERAGE NO. OF ROWS INDICATED. ON SLOPES, INCREASE ROW SPACING BY 25% FOR LOWEST 1/3 OF ZONE. SEE IRRIGATION DETAILS.

17. CONTROLLER:
INSTALL CONTROLLER AS SHOWN ON THE DRAWINGS. ALL ABOVE-GRADE CONDUIT SHALL BE RIGID STEEL SECURELY FASTENED TO STRUCTURE AND TO CONTROLLER.

18. PROGRAMMING / SCHEDULING:
PRIOR TO THE END OF THE MAINTENANCE PERIOD, PROGRAM THE ET CONTROLLER PER MANUFACTURER'S DIRECTIONS.

PROVIDE AT LEAST TWO START TIMES FOR SHRUBS IF OVER 5 MINUTES IN LENGTH FOR ANY ONE STATION. SHRUBS SHALL BE SEPARATED INTO TWO PROGRAMS, ONE FOR SUN VALVES, ONE FOR PARTIAL SHADE TO SHADE VALVES.

19. FLUSH (E) MAIN:
UPON COMPLETION OF CONNECTION TO (E) MAIN, ALLOWING FOR SOLVENT SETUP, FLUSH MAIN LINE AND EXISTING MAIN BY FLUSHING NEAREST QUICK COUPLER DOWNSTREAM OF P.O.C. ON EXISTING MAIN.

20. MASTER VALVE / FLOW SENSOR:
CONNECT FLOW SENSOR AND MASTER VALVE TO CONTROLLER WITH COMMUNICATION CABLE, SEE IRRIGATION DETAILS. INSTALL IN DEDICATED 1" DIAMETER PVC CONDUIT.

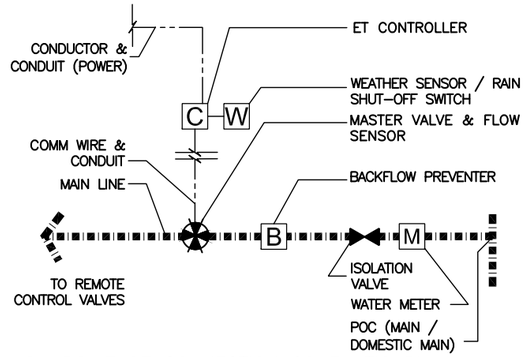

1 POINT OF CONNECTION SCHEMATIC PLAN
NTS

REDUCED HALF SIZE (11X17)

REV	DESCRIPTION	DATE	APPR.
A	30% REVIEW SUBMITTAL	11/14	TS
B	60% REVIEW SUBMITTAL	4/16	TS

REFERENCE INFORMATION AND NOTES

bellinger foster steinmetz
425 Pacific Street, Suite 201
Monterey, CA 93940
PH 831.646.1383
www.bfsla.com

DATE 4-16-12
DESIGN A. Pal
DRAWN K. Bissett
CHECKED X.X.

ENGINEERING CERTIFICATION
PROJECT ENGINEER DATE

Santa Clara Valley Water District
ACCEPTED BY DISTRICT

PROJECT NAME AND SHEET DESCRIPTION:
PERMANENTE CREEK FLOOD PROTECTION PROJECT
RANCHO SAN ANTONIO IRRIGATION NOTES

SCALE N/A
VERIFY SCALES 0 1"
BAR IS ONE INCH ON ORIGINAL DRAWING IF NOT ONE INCH ON THIS SHEET, ADJUST SCALES ACCORDINGLY

PROJECT NUMBER 26244001
SHEET CODE: L-04
SHEET NUMBER: OF

USERNAME:
FILENAME: F:\PRODUCTION\Projects\2010\10.013\CAD\10013_02Irrigation
DOCUMENT NUMBER: XXXX-X-0000-0000000.00

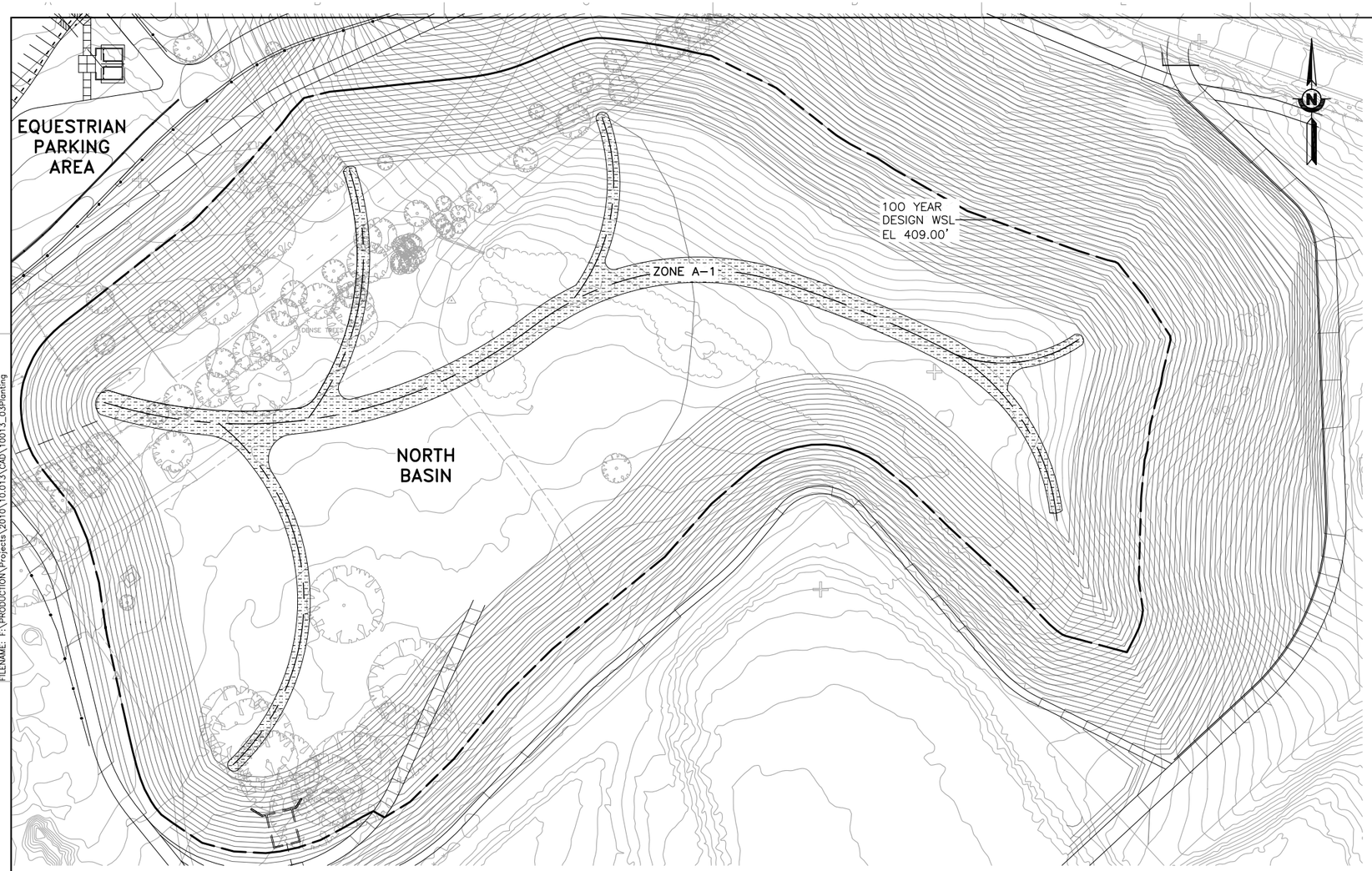

NORTH BASIN MITIGATION PLANTING PLAN

LEGEND – NORTH BASIN MITIGATION

GRASSES / PERENNIALS

	ZONE–A1: SEASONAL WETLAND AREA: PLANTING METHOD – HAND SEEDING AND / OR PLUGS. SEE SPECIFICATIONS. COMPLY WITH EIR REQUIREMENT OF SEASONAL WETLAND HABITAT 1:1 MITIGATION. REPRESENTATIVE SPECIES: SCIRPUS SPP., JUNCUS SPP., CYPERUS ERAGROSTIS. SEEDS / PLUGS TO BE COLLECTED FROM LOCAL WATERSHED.	24,050 SF

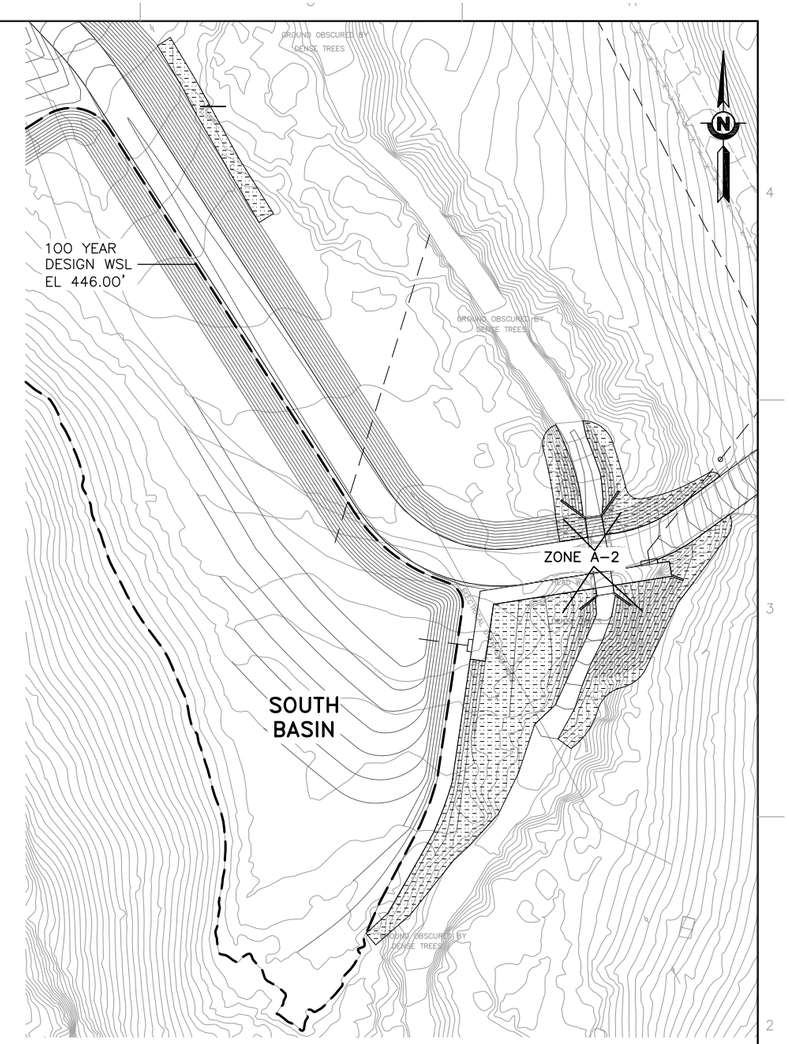

SOUTH BASIN MITIGATION PLANTING PLAN

LEGEND – SOUTH BASIN MITIGATION

GRASSES / PERENNIALS

	ZONE–A2: RIPARIAN AREA: PLANTING METHOD – PLUGS AND CUTTINGS. SEE SPECIFICATIONS. COMPLY WITH EIR REQUIREMENT OF RIPARIAN HABITAT 1:1 MITIGATION. REPRESENTATIVE SPECIES TBD AFTER FIELD SURVEY. CUTTINGS TO BE COLLECTED FROM LOCAL WATERSHED.	17,200 SF

REDUCED HALF SIZE (11X17)

USERNAME:
FILENAME: F:\PRODUCTION\Projects\2010\10.013\CAD\10013_03Planting

DOCUMENT NUMBER: XXXX–X–0000–0000000.00

REV	DESCRIPTION	DATE	APPR.
A	30% REVIEW SUBMITTAL	11/14	TS
B	60% REVIEW SUBMITTAL	4/16	TS

REFERENCE INFORMATION AND NOTES

bellinger foster steinmetz
425 Pacific Street, Suite 201
Monterey, CA 93940
PH 831.646.1383
www.bfsla.com

DATE 4–16–12
DESIGN A. Pal
DRAWN K. Bissett
CHECKED X.X.

ENGINEERING CERTIFICATION
PROJECT ENGINEER DATE

Santa Clara Valley Water District
ACCEPTED BY DISTRICT

PROJECT NAME AND SHEET DESCRIPTION:
PERMANENTE CREEK FLOOD PROTECTION PROJECT
RANCHO SAN ANTONIO MITIGATION PLANTING PLANS

SCALE 1" = 50'
VERIFY SCALES 0 1"
BAR IS ONE INCH ON ORIGINAL DRAWING IF NOT ONE INCH ON THIS SHEET, ADJUST SCALES ACCORDINGLY

PROJECT NUMBER 26244001
SHEET CODE: L–05
SHEET NUMBER: OF

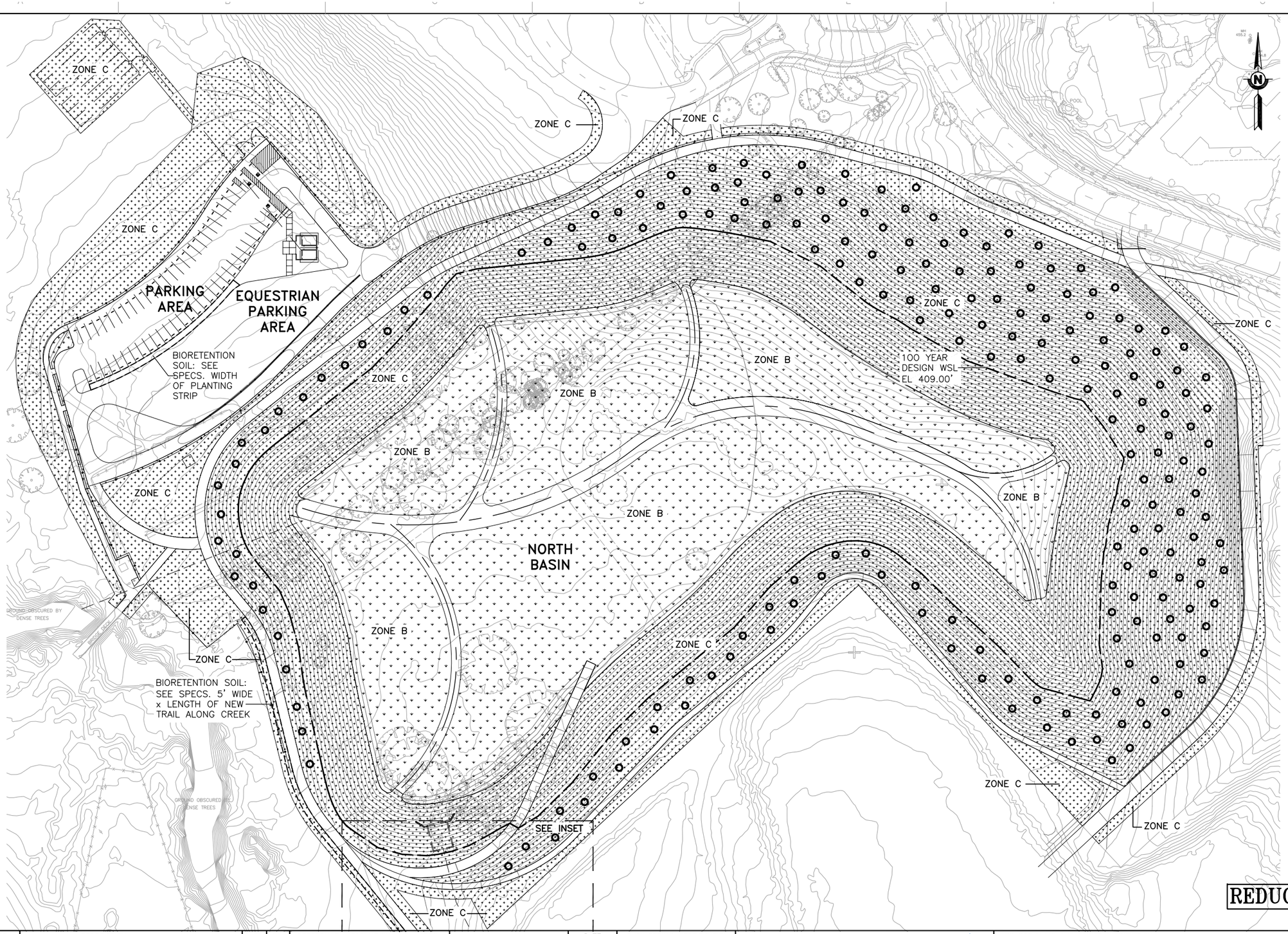

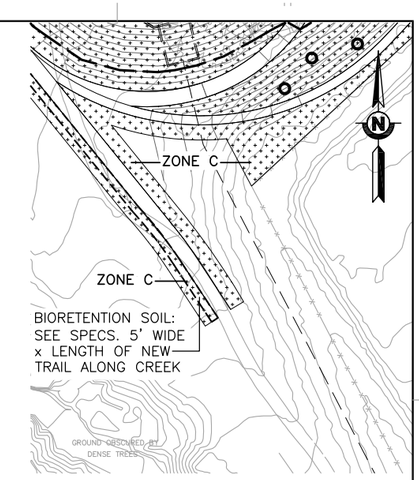

INSET

SEE L-07 FOR LEGEND

REDUCED HALF SIZE (11X17)

USERNAME:
FILENAME: F:\PRODUCTION\Projects\2010\10.013\CAD\10013_03Planting

DOCUMENT NUMBER: XXXX-X-0000-0000000.00

REV	DESCRIPTION	DATE	APPR.
A	30% REVIEW SUBMITTAL	11/14	TS
B	60% REVIEW SUBMITTAL	4/16	TS

REFERENCE INFORMATION AND NOTES

bellinger foster steinmetz
425 Pacific Street, Suite 201
Monterey, CA 93940
PH 831.646.1383
www.bfsla.com

DATE 4-16-12
DESIGN A. Pal
DRAWN K. Bissett
CHECKED X.X.

ENGINEERING CERTIFICATION
PROJECT ENGINEER DATE

Santa Clara Valley Water District
ACCEPTED BY DISTRICT

PROJECT NAME AND SHEET DESCRIPTION:
PERMANENTE CREEK FLOOD PROTECTION PROJECT
RANCHO SAN ANTONIO PLANTING PLAN-NORTH BASIN

SCALE 1" = 50'
VERIFY SCALES 0 1"
BAR IS ONE INCH ON ORIGINAL DRAWING IF NOT ONE INCH ON THIS SHEET, ADJUST SCALES ACCORDINGLY

PROJECT NUMBER 26244001
SHEET CODE: L-06
SHEET NUMBER: OF

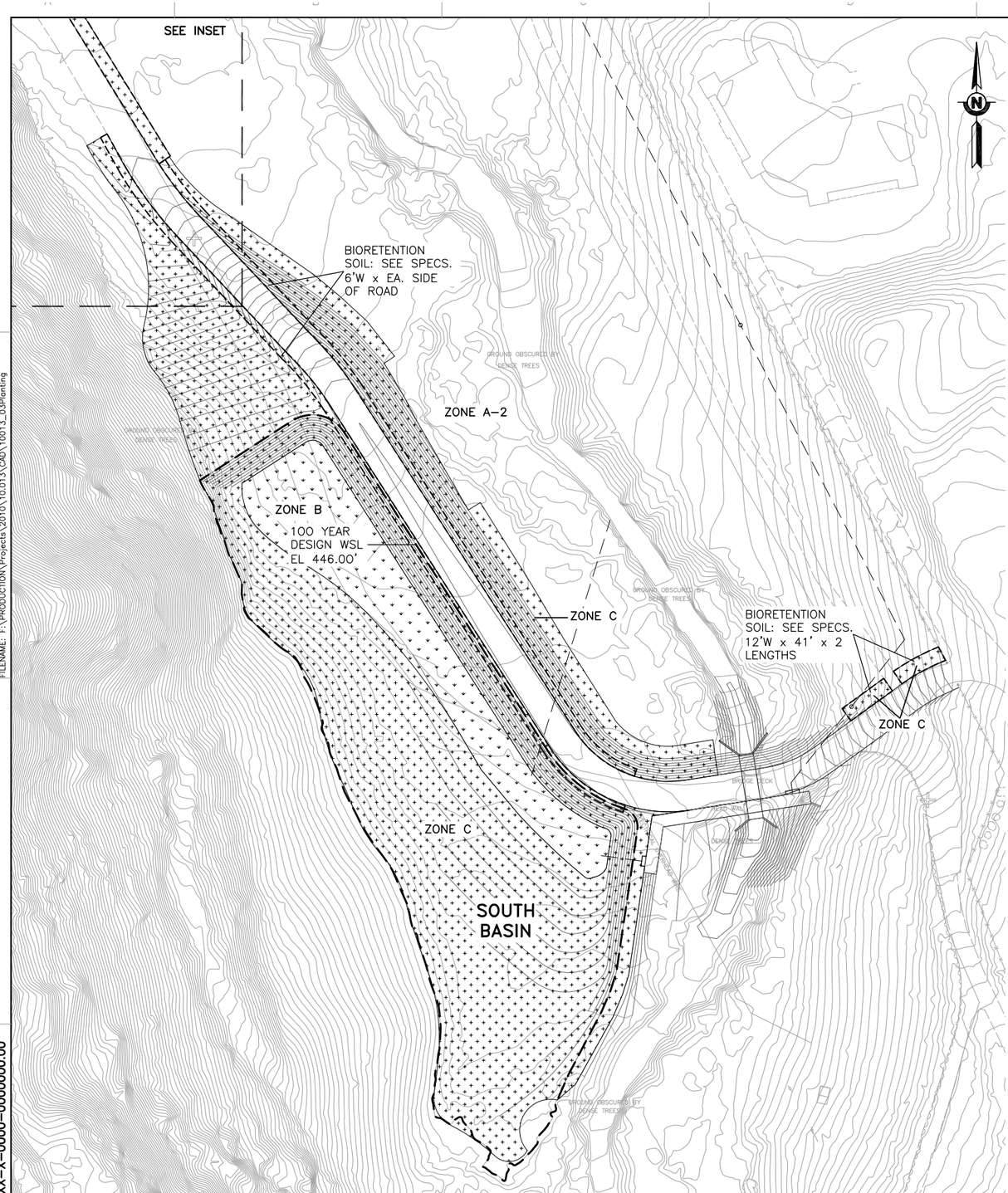

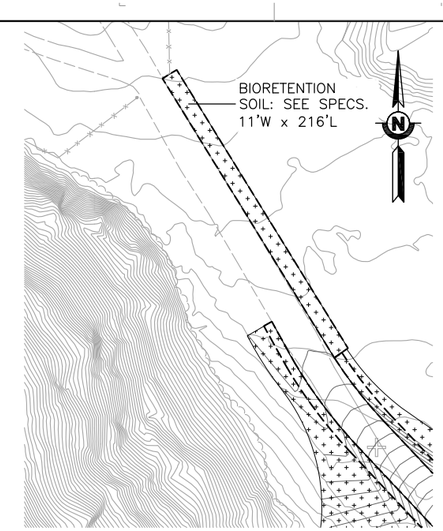

INSET

LEGEND

GRASSES / PERENNIALS

	ZONE–B: WET HERBACEOUS AREA: PLANTING METHOD – 2–LAYER HYDROSEEDING. SEE SPECIFICATIONS. NATIVE GRASS SEED MIX – SEE TABLE BELOW.	NORTH BASIN 189,114 SF SOUTH BASIN 18,200 SF
	ZONE–C: DRY HERBACEOUS AREA: PLANTING METHOD – 2–LAYER HYDROSEEDING. SEE SPECIFICATIONS. NATIVE GRASS SEED MIX – SEE TABLE BELOW.	NORTH BASIN 323,723 SF SOUTH BASIN 86,900 SF
o	QUERCUS AGRIFOLIA (COAST LIVE OAK) ACORN PLANTING. SEE SPECS. SEE PLANTING DETAILS	209 LOCATIONS

NOTE: AREA MEASUREMENTS ARE APPROXIMATE PLAN MEASUREMENTS AND DO NOT TAKE INTO ACCOUNT SLOPES.

NATIVE GRASS SEED MIX

ZONE–C

BOTANICAL NAME	COMMON NAME	RATE / ACRE
BROMUS CARINATUS	CALIFORNIA BROME	10 lbs/acre
ELYMUS GLAUCUS*	BLUE WILDRYE	15 lbs/acre
ELYMUS MULTISETUS	BIG SQUIRREL TAIL	8 lbs/acre
ESCHSCHOLZIA CALIFORNICA*	CALIFORNIA POPPY	2 lbs/acre
NASSELLA PULCHRA*	PURPLE NEEDLEGRASS	15 lbs/acre
SISYRINCHIUM BELLUM*	BLUE–EYED GRASS	3 lbs/acre
	TOTAL	53 lbs/acre

ZONE–B (ADD TO ZONE–C SEED MIX)

HORDEUM BRACHYANTHERUM	MEADOW BARLEY	5 lbs/acre
	TOTAL	58 lbs/acre

NOTES:

1. * INDICATES SPECIES LISTED IN TABLE D–1: PLANT LIST FOR STORM WATER MEASURES, SANTA CLARA VALLEY URBAN RUNOFF POLLUTION PREVENTION PROGRAM

2. SEED SHALL BE COMMERCIALLY AVAILABLE SEED OF SANTA CLARA COUNTY ORIGIN. PROVIDE DOCUMENTATION FROM SEED SUPPLIER. SEE SPECIFICATIONS FOR DETAILS

3. SEED MIXES SHALL CONTAIN 20 LBS PER ACRE OF TRITICUM X AGROPYRON 'ESCORT' (ESCORT STERILE WHEAT) AS A NURSE MIX.

REDUCED HALF SIZE (11X17)

USERNAME:
FILENAME: F:\PRODUCTION\Projects\2010\10.013\CAD\10013_03Planting

DOCUMENT NUMBER: XXXX–X–0000–0000000.00

REV	DESCRIPTION	DATE	APPR.
A	30% REVIEW SUBMITTAL	11/14	TS
B	60% REVIEW SUBMITTAL	4/16	TS

REFERENCE INFORMATION AND NOTES

bellinger foster steinmetz
425 Pacific Street, Suite 201
Monterey, CA 93940
PH 831.646.1383
www.bfsla.com

DATE 4–16–12
DESIGN A. Pal
DRAWN K. Bissett
CHECKED X.X.

ENGINEERING CERTIFICATION
PROJECT ENGINEER DATE

Santa Clara Valley Water District
ACCEPTED BY DISTRICT

PROJECT NAME AND SHEET DESCRIPTION:
PERMANENTE CREEK FLOOD PROTECTION PROJECT
RANCHO SAN ANTONIO PLANTING PLAN–SOUTH BASIN

SCALE 1" = 50'
VERIFY SCALES 0 1"
BAR IS ONE INCH ON ORIGINAL DRAWING IF NOT ONE INCH ON THIS SHEET, ADJUST SCALES ACCORDINGLY

PROJECT NUMBER 26244001
SHEET CODE: L–07
SHEET NUMBER: OF

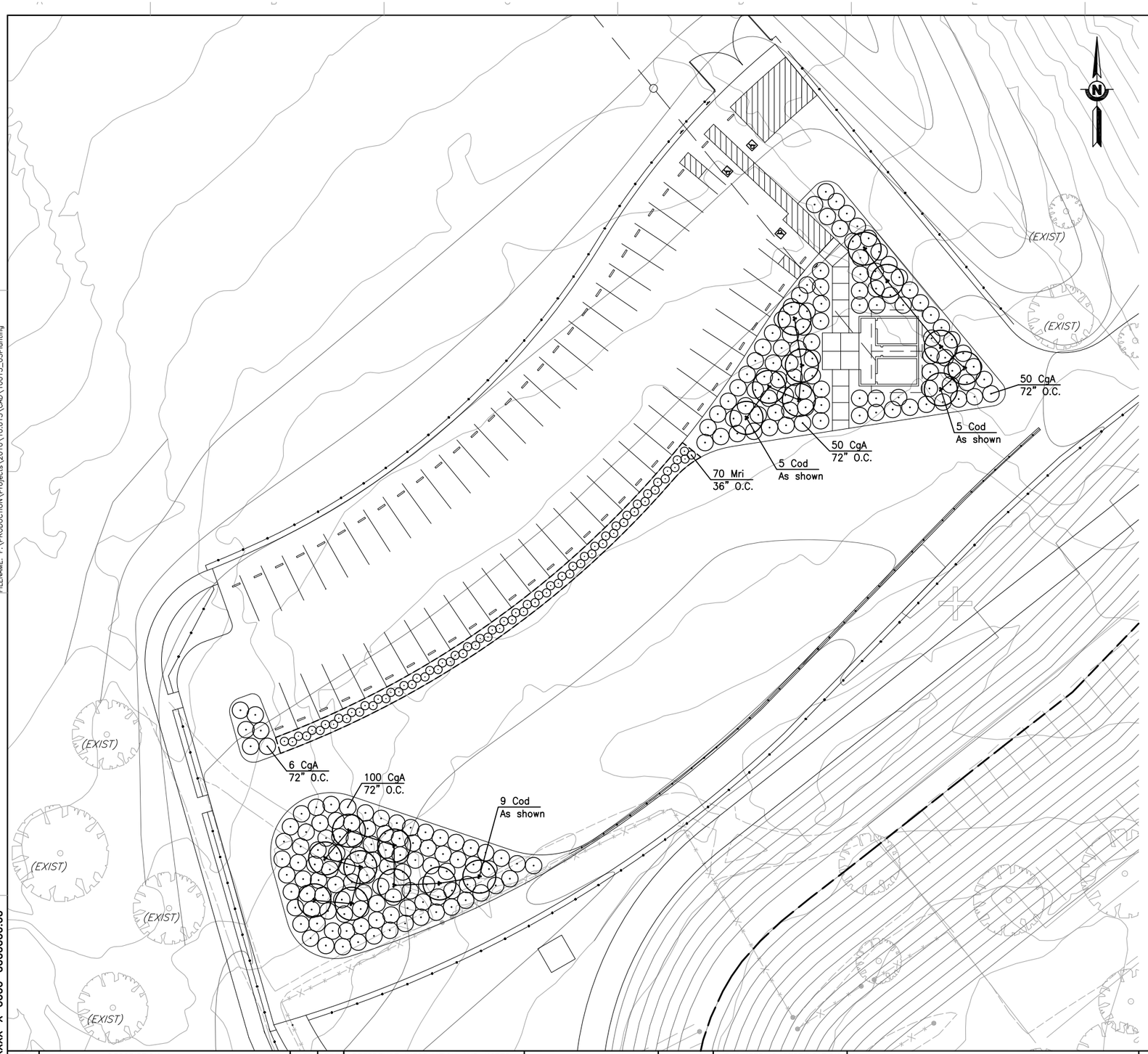

LEGEND

SHRUBS

WUC	CODE	BOTANICAL NAME	COMMON NAME	SIZE
L	CgA	CEANOTHUS GLORIOSUS 'ANCHOR BAY'	PT. REYES CEANOTHUS	5 GAL.
VL	Cod	CERCIS OCCIDENTALIS 'MULTI'	WESTERN REDBUD	15 GAL.
L	Mri	MUHLENBERGIA RIGENS	DEER GRASS	5 GAL.

* WATER USE CATEGORY (WUC) KEY

WUCOLS Region Applicable to this Project: REGION 1
H = High; M = Moderate; L = Low; VL = Very Low; NL = Species Not Listed
* from: Water Use Classification of Landscape Species,
A Guide to the Water Needs of Landscape Plants (WUCOLS)
Revised August 2000, University of California Cooperative Extension,
L.R. Costello, K.S. Jones

GENERAL NOTES

1. See Specifications for materials and procedures including, but not limited to, soil preparation, amendments, fertilizers, herbicides, and mulch application.
2. See Specifications for materials and procedures including plant pit size, staking. See Planting Details.

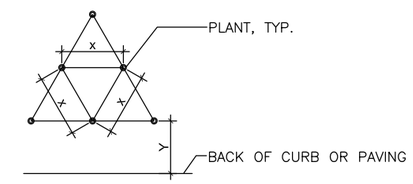

1. FOR SPACING 'X', SEE PLANTING PLAN
2. Y= 1/2X + 12"

GROUNDCOVER SPACING AND PLANTING SETBACK DIAGRAM

REDUCED HALF SIZE (11X17)

USERNAME:
FILENAME: F:\PRODUCTION\Projects\2010\10.013\CAD\10013_03Planting

DOCUMENT NUMBER: XXXX-X-0000-0000000.00

REV	DESCRIPTION	DATE	APPR.
A	30% REVIEW SUBMITTAL	11/14	TS
B	60% REVIEW SUBMITTAL	4/16	TS

REFERENCE INFORMATION AND NOTES

bellinger foster steinmetz
425 Pacific Street, Suite 201
Monterey, CA 93940
PH 831.646.1383
www.bfsla.com

DATE 4-16-12
DESIGN A. Pal
DRAWN K. Bissett
CHECKED X.X.

ENGINEERING CERTIFICATION
PROJECT ENGINEER DATE

Santa Clara Valley Water District
ACCEPTED BY DISTRICT

PROJECT NAME AND SHEET DESCRIPTION:
PERMANENTE CREEK
FLOOD PROTECTION PROJECT
RANCHO SAN ANTONIO
PLANTING PLAN-PARKING LOT

SCALE 1" = 20'
VERIFY SCALES 0 1"
BAR IS ONE INCH ON ORIGINAL DRAWING IF NOT ONE INCH ON THIS SHEET, ADJUST SCALES ACCORDINGLY

PROJECT NUMBER 26244001
SHEET CODE: L-08
SHEET NUMBER: OF

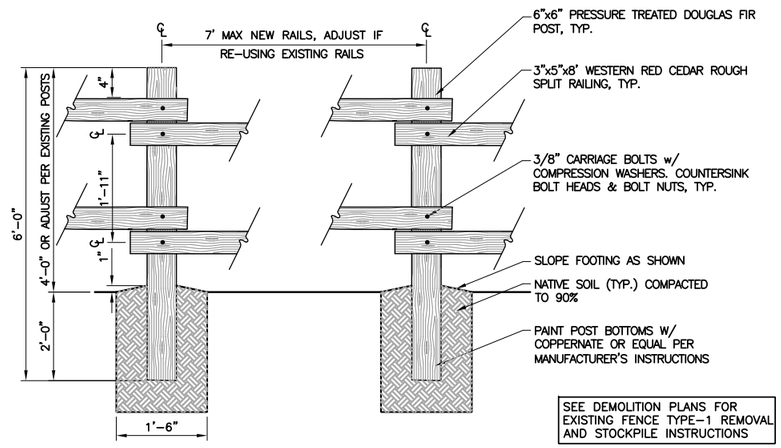

DETAIL 1 – FENCE TYPE-1
NTS

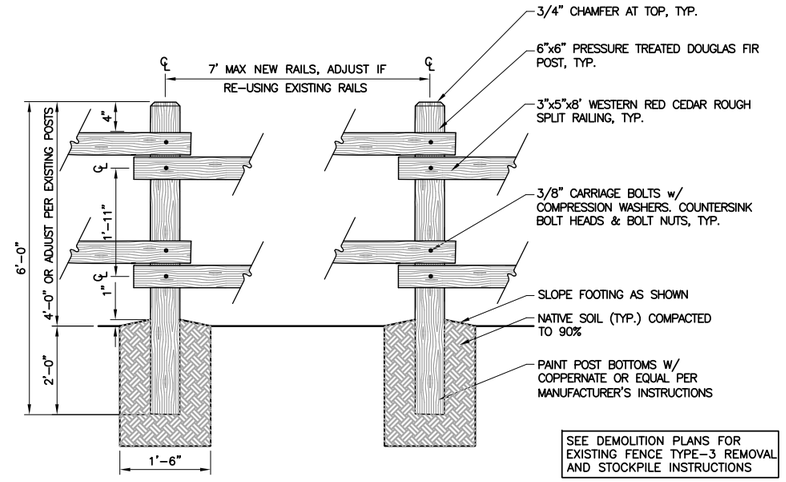

DETAIL 3 – FENCE TYPE-3
NTS

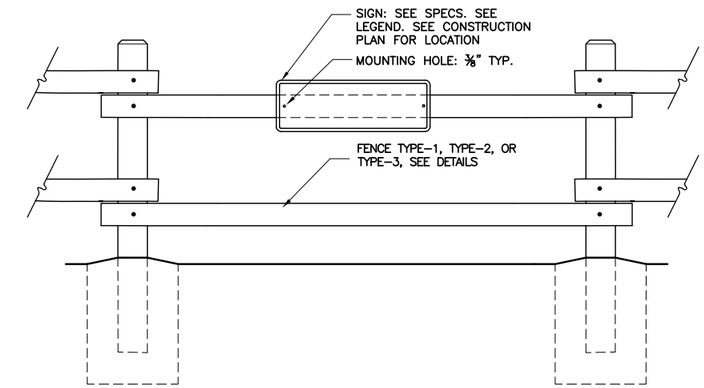

DETAIL 5 – RAIL MOUNTED SIGN
NTS

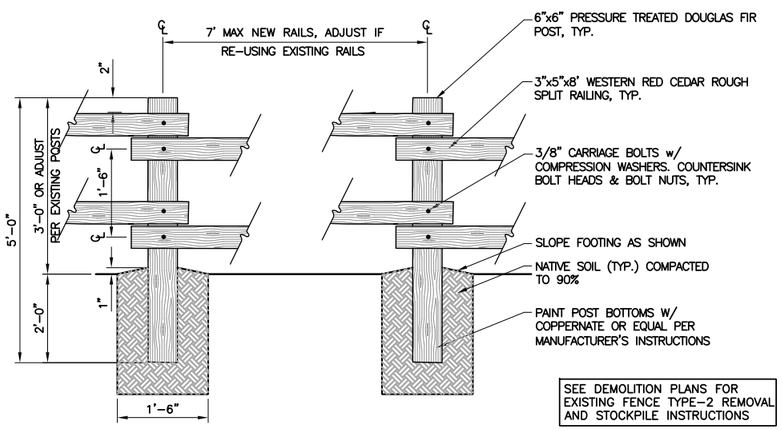

DETAIL 2 – FENCE TYPE-2
NTS

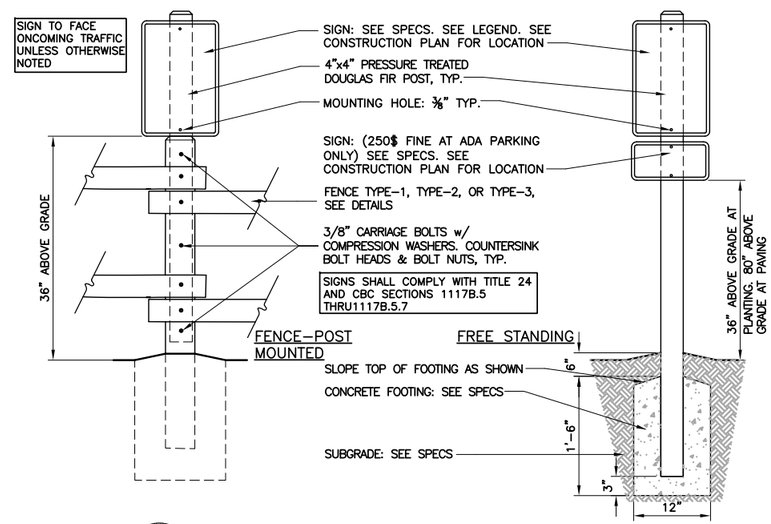

DETAIL 4 – POST MOUNTED SIGN
NTS

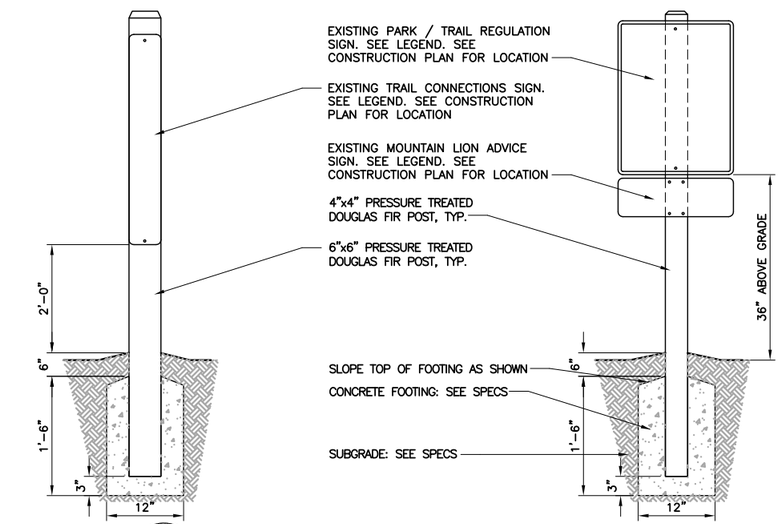

DETAIL 6 – RELOCATED SIGNS
NTS

DO NOT ENTER

EQUESTRIAN / NO CARS

TRAILERS / CARS DIRECTIONS

EQUESTRIAN / PARKING ONLY

ONE-WAY w/ LEFT ARROW

EXIT w/ ARROW

SPEED LIMIT 15 MPH

FIRE LANE

NO HORSES (EXIST. SIGN)

PARK HOURS
NO SMOKING

PARK USER RESPONSIBILITY

EQUESTRIAN WASTE MANAGEMENT

PARK REGULATIONS

TRAIL REGULATIONS

TRAIL CONNECTIONS

NO PARKING LEFT ARROW

NO PARKING RIGHT ARROW

NO PARKING NO ARROW

DETAIL 7 – SIGN LEGEND
NTS

REDUCED HALF SIZE (11X17)

REV	DESCRIPTION	DATE	APPR.
A	30% REVIEW SUBMITTAL	11/14	TS
B	60% REVIEW SUBMITTAL	4/16	TS

REFERENCE INFORMATION AND NOTES

bellinger foster steinmetz
425 Pacific Street, Suite 201
Monterey, CA 93940
PH 831.646.1383
www.bfsla.com

DATE 4-16-12
DESIGN A. PAL
DRAWN K. BISSETT
CHECKED X.X.

ENGINEERING CERTIFICATION
PROJECT ENGINEER DATE

Santa Clara Valley Water District
ACCEPTED BY DISTRICT

PROJECT NAME AND SHEET DESCRIPTION:
PERMANENTE CREEK FLOOD PROTECTION PROJECT
RANCHO SAN ANTONIO FENCING & SIGNAGE DETAILS

SCALE: AS SHOWN
VERIFY SCALES: 0 1"
BAR IS ONE INCH ON ORIGINAL DRAWING IF NOT ONE INCH ON THIS SHEET, ADJUST SCALES ACCORDINGLY

PROJECT NUMBER: 26244001
SHEET CODE: L-09
SHEET NUMBER: OF

USERNAME:
FILENAME: F:\PRODUCTION\Projects\2010\10.013\CAD\10013_04ConDet
DOCUMENT NUMBER: XXXX-X-0000-0000000.00

NOTES:
1. SEE SPECS FOR BFP PIPE & FITTING MATERIALS.
2. INSTALL COUPLING AND CONNECT PIPING AS SHOWN.
3. ISOLATION VALVE ON WATER SUPPLIERS SIDE.
4. INSTALL BALL TYPE TEST COCKS WITH COVERS TO ALLOW FOR STANDARD BACK-FLOW TESTER UNIT EQUIPMENT CONNECTION,

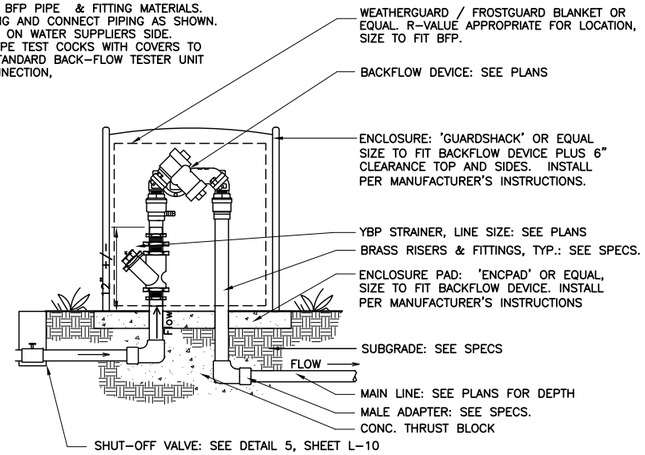

DETAIL 1 – BACKFLOW DEVICE: 2-1/2" PIPE OR LESS

NOT TO SCALE

* NOTE:
FLOW SENSOR MUST BE INSTALLED W/ INSERT (TOP) POSITIONED VERTICALLY AND BODY (TEE) POSITIONED HORIZONTALLY.

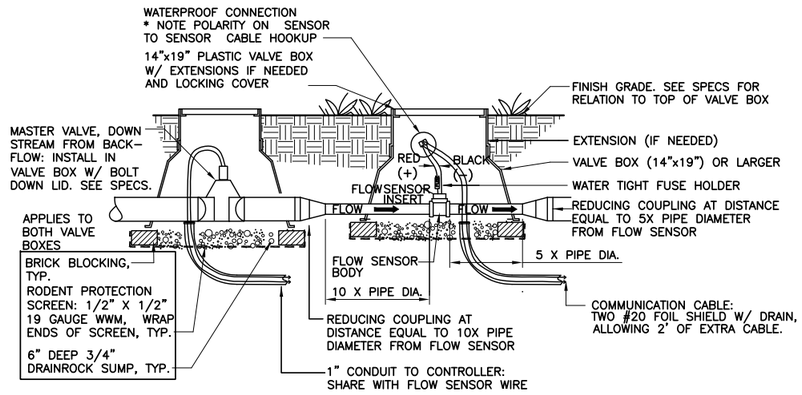

DETAIL 3 – MASTER VALVE/FLOW SENSOR

NOT TO SCALE

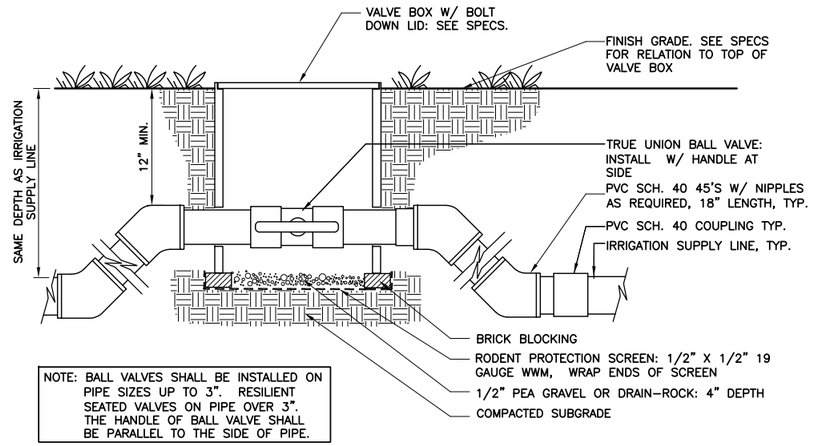

NOTE: BALL VALVES SHALL BE INSTALLED ON PIPE SIZES UP TO 3". RESILIENT SEATED VALVES ON PIPE OVER 3". THE HANDLE OF BALL VALVE SHALL BE PARALLEL TO THE SIDE OF PIPE.

DETAIL 5 – BALL VALVE

NOT TO SCALE

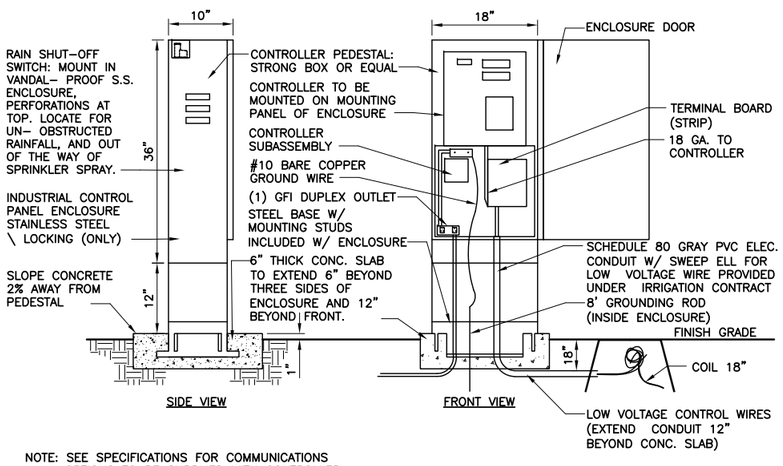

NOTE: SEE SPECIFICATIONS FOR COMMUNICATIONS OPTIONS TO BE SUPPLIED WITH CONTROLLER.

DETAIL 2 – ET CONTROLLER PEDESTAL MOUNT FRONT ENTRY

NOT TO SCALE

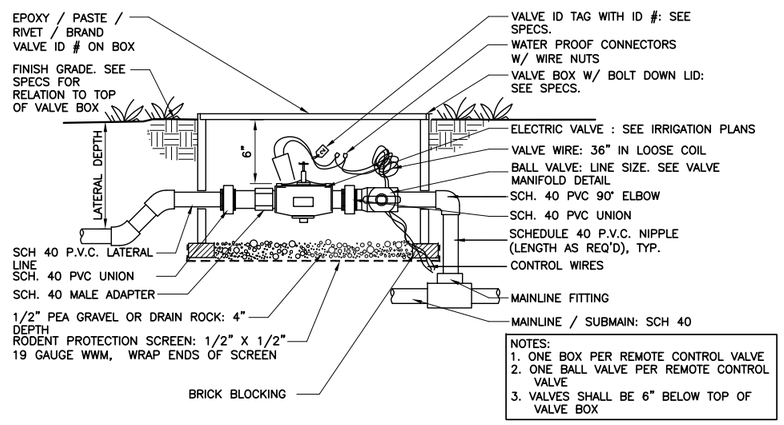

NOTES:
1. ONE BOX PER REMOTE CONTROL VALVE
2. ONE BALL VALVE PER REMOTE CONTROL VALVE
3. VALVES SHALL BE 6" BELOW TOP OF VALVE BOX

DETAIL 4 – REMOTE CONTROL VALVE

NOT TO SCALE

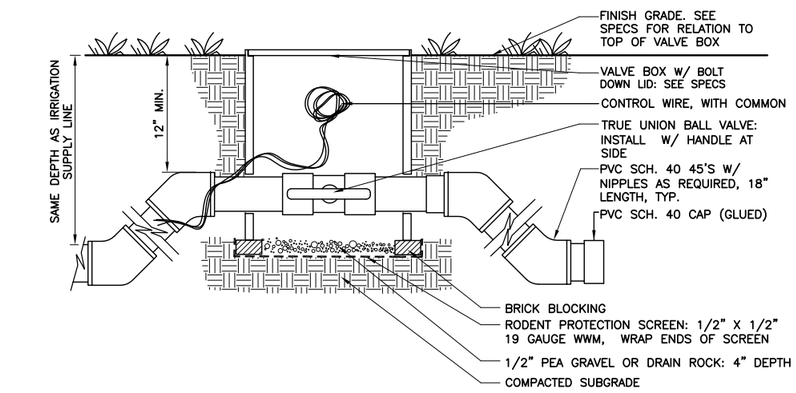

NOTE: BALL VALVES SHALL BE INSTALLED ON PIPE SIZES UP TO 3". RESILIENT SEATED VALVES ON PIPE OVER 3". THE HANDLE OF BALL VALVE SHALL BE PARALLEL TO THE SIDE OF PIPE.

DETAIL 6 – MAINLINE STUBOUT

NOT TO SCALE

REDUCED HALF SIZE (11X17)

REV	DESCRIPTION	DATE	APPR.
A	30% REVIEW SUBMITTAL	11/14	TS
B	60% REVIEW SUBMITTAL	4/16	TS

REFERENCE INFORMATION AND NOTES

bellinger foster steinmetz
425 Pacific Street, Suite 201
Monterey, CA 93940
PH 831.646.1383
www.bfsla.com

DATE 4-16-12
DESIGN A. PAL
DRAWN K. BISSETT
CHECKED X.X.

ENGINEERING CERTIFICATION
PROJECT ENGINEER DATE

Santa Clara Valley Water District
ACCEPTED BY DISTRICT

PROJECT NAME AND SHEET DESCRIPTION:
PERMANENTE CREEK FLOOD PROTECTION PROJECT
RANCHO SAN ANTONIO
IRRIGATION AND PLANTING DETAILS

SCALE: AS SHOWN
VERIFY SCALES: 0 1"
BAR IS ONE INCH ON ORIGINAL DRAWING IF NOT ONE INCH ON THIS SHEET, ADJUST SCALES ACCORDINGLY

PROJECT NUMBER: 26244001
SHEET CODE: L-10
SHEET NUMBER: OF

USERNAME:
FILENAME: F:\PRODUCTION\Projects\2010\10.013\CAD\10013_05PlantirrDet
DOCUMENT NUMBER: XXXX-X-0000-0000000.00

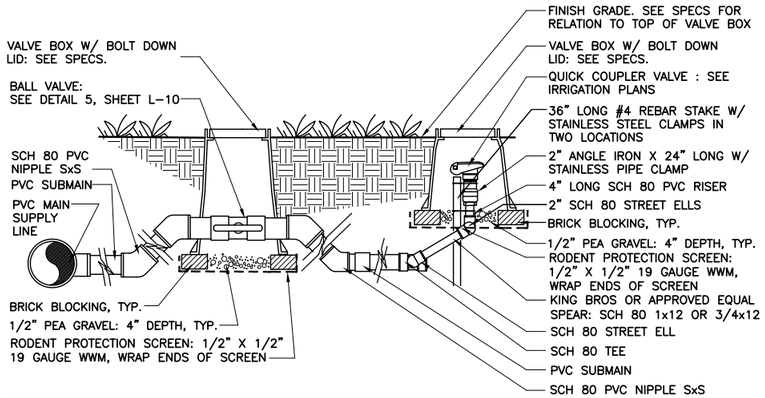

NOTE:
1. GROUP QUICK COUPLER WITH VALVES FOR USE OF COMMON ISOLATION BALL VALVE.
2. SCHEDULE 80 PRE-ASSEMBLED SWING MAY BE USED ONLY.
3. DO NOT INSTALL DIRECTLY ON TOP OF LIVE WATER MAINS.
4. BALL VALVE. MAY BE INSTALLED TO MAXIMUM OF 12" FROM FINAL GRADE WITH THE USE OF 45-DEGREE PIPE FITTINGS OR LEFT STRAIGHT IN LINE AT 18" DEEP

DETAIL 1 – QUICK COUPLER
NOT TO SCALE

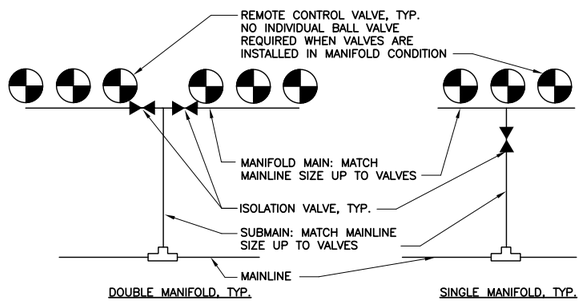

NOTE: MAX. 3 REMOTE CONTROL VALVES PER SHUT-OFF (BALL) VALVE.

DETAIL 2 – TYPICAL VALVE MANIFOLD
NOT TO SCALE

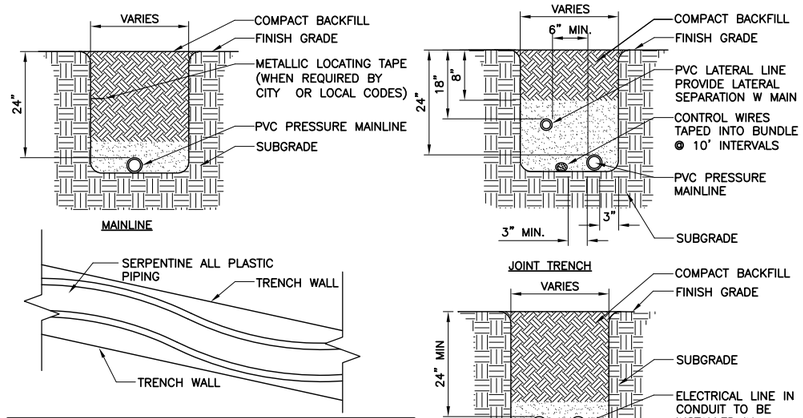

NOTE:
1. REFER TO APPLICABLE CODES FOR MAINLINE DEPTH UNDER ROADWAYS
2. SERPENTINE ALL PLASTIC PIPING.
3. LATERAL SEPARATION DISTANCES SHOWN ARE MINIMUMS UON.
4. SEE SPECIFICATIONS FOR TRENCH BACKFILL.
5. ALL WIRES SHALL BE TAPED AND BUNDLED AT 10' INTERVALS IN TRENCHES.

DETAIL 3 – TRENCH & PIPE INSTALLATION
NOT TO SCALE

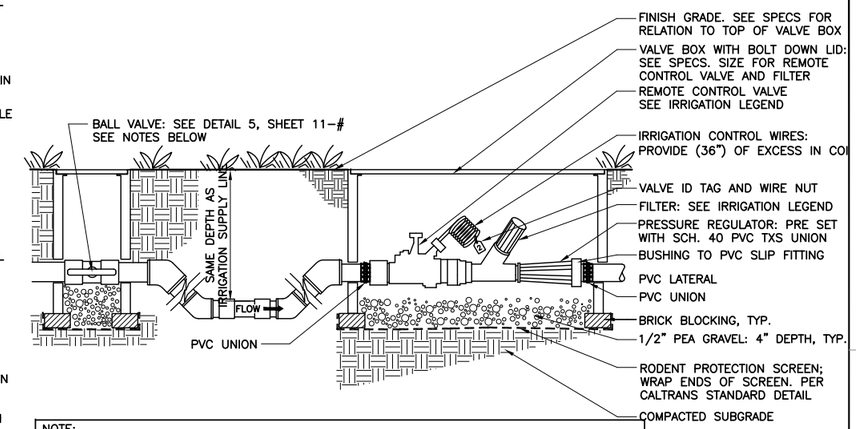

NOTE:
1. ONE REMOTE CONTROL VALVE, FILTER, AND REGULATOR PER BOX.
2. ONE BALL VALVE PER REMOTE CONTROL VALVE
3. BOX SHALL NOT REST UPON OR TOUCH THE VALVE, FILTER OR ANY LATERAL AT ANY POINT.
4. 'TEFLON' TAPE REQUIRED ON ALL THREADED JOINTS.

DETAIL 5 – DRIP IRRIGATION VALVE ASSEMBLY
NOT TO SCALE

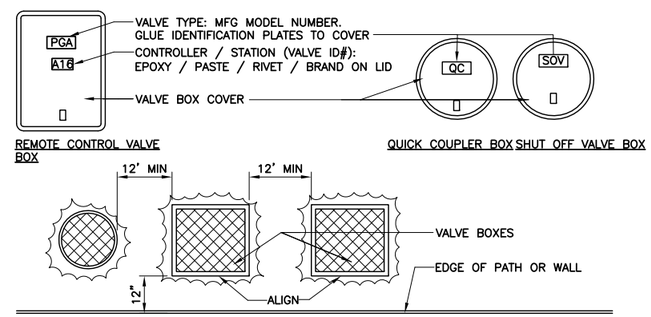

NOTE:
1. ALL VALVE BOXES NEED TO BE IDENTIFIED. EPOXY / PASTE / RIVET / BRAND VALVE ID # ON BOX.
2. VALVE BOXES SHALL HAVE 12" CLEARANCE FROM STRUCTURES AND ANY CONCRETE AREAS. SET BOXES PARALLEL TO EACH OTHER AND PERPENDICULAR TO CONCRETE, SOUND WALL, HEADERBOARD, ETC.
2. SET BOXES 1-1 /2" ABOVE FINISHED GRADE IN MULCH-COVERED AREAS. SET BOXES 1/2" ABOVE GRADE IN TURF AREAS. BOXES TO BE PERPENDICULAR TO FINISH GRADE
3. SET RCV AND VALVE BOX ASSEMBLY IN GROUND COVER / SHRUB AND NOT IN SIDEWALK OR ROADWAY. INSTALL IN LAWN ONLY IF GROUNDCOVER DOES NOT EXIST ADJACENT TO LAWN.
4. INSTALL EXTENSION BY VALVE BOX MANUFACTURER AS REQUIRED TO COMPLETELY ENCLOSE ASSEMBLY FOR EASY ACCESS.
5. VALVE BOXES THAT ARE RECTANGULAR SHALL HAVE 4 COMMON BRICKS INSTALLED UNDER EACH CORNER. ROUND VALVE BOXES SHALL HAVE 2 COMMON BRICKS INSTALLED UNDER THEM. THE BRICKS ARE ADDED FOR STABILITY. BRICKS SHALL NEVER BE PLACED OVER ANY PIPE OR ITEM THAT COULD FAIL DUE TO BRICK PLACEMENT.
6. AVOID HEAVILY COMPACTING SOIL AROUND VALVE BOXES TO PREVENT COLLAPSE AND DEFORMATION OF VALVE BOX SIDES.

DETAIL 4 – VALVE BOX INSTALLATION
NOT TO SCALE

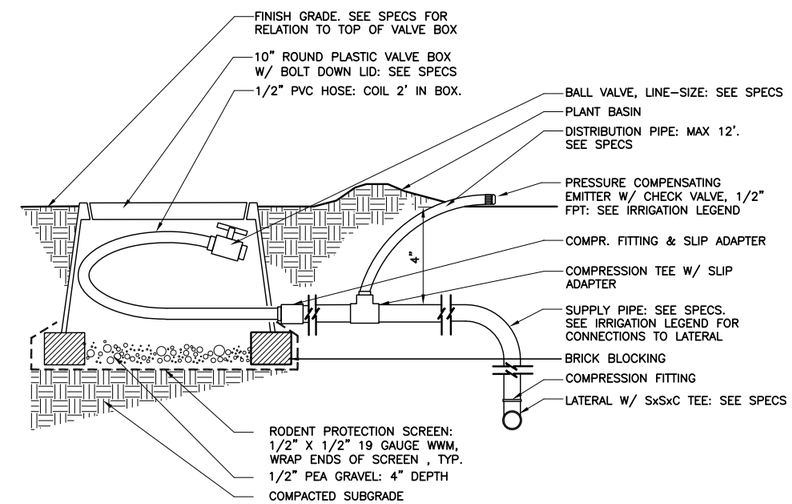

DETAIL 6 – DRIP IRRIGATION FLUSH PORT/EMITTER
NOT TO SCALE

REDUCED HALF SIZE (11X17)

REV	DESCRIPTION	DATE	APPR.
A	30% REVIEW SUBMITTAL	11/14	TS
B	60% REVIEW SUBMITTAL	4/16	TS

REFERENCE INFORMATION AND NOTES

bellinger foster steinmetz
425 Pacific Street, Suite 201
Monterey, CA 93940
PH 831.646.1383
www.bfsla.com

DATE 4-16-12
DESIGN A. PAL
DRAWN K. BISSETT
CHECKED X.X.

ENGINEERING CERTIFICATION
PROJECT ENGINEER DATE

Santa Clara Valley Water District
. TRICT

PROJECT NAME AND SHEET DESCRIPTION:
PERMANENTE CREEK FLOOD PROTECTION PROJECT
RANCHO SAN ANTONIO
IRRIGATION AND PLANTING DETAILS

SCALE: AS SHOWN
VERIFY SCALES: 0 1"
BAR IS ONE INCH ON ORIGINAL DRAWING IF NOT ONE INCH ON THIS SHEET, ADJUST SCALES ACCORDINGLY

PROJECT NUMBER: 26244001
SHEET CODE: L-11
SHEET NUMBER: OF

DOCUMENT NUMBER: XXXX-X-0000-0000000.00
USERNAME:
FILENAME: F:\PRODUCTION\Projects\2010\10.013\CAD\10013_05PlantirrDet

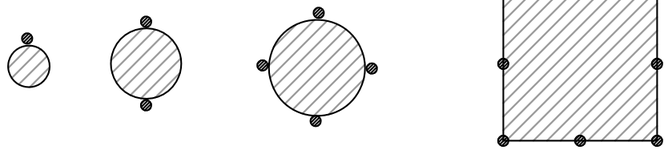

1–GALLON PLANT
LOCATE 1 EMITTER AT THE EDGE OF THE ROOTBALL AS SHOWN

5–GALLON PLANT
LOCATE 2 EMITTERS ALONG THE EDGE OF THE ROOTBALL AS SHOWN

15–GALLON PLANT
LOCATE 4 EMITTERS ALONG THE EDGE OF THE ROOTBALL AS SHOWN

24–IN BOX PLANT
LOCATE 8 EMITTERS ALONG THE EDGES OF THE ROOTBALL AS SHOWN

NOTES:
1. ON SLOPES, LOCATE THE EMITTERS TOWARDS THE UPHILL SIDE OF THE ROOTBALL
2. SEE IRRIGATION LEGEND FOR EMITTER GPH AND CONNECTION METHODS TO SUPPLY LINE
3. SEE SPECS FOR SUPPLY & DISTRIBUTION PIPE
4. IF USING SOAKER HOSE OR DRIPPER LINE PROVIDE EQUIVALENT NUMBER OF DRIPPERS IN SIMILAR PATTERN AROUND ROOTBALLS

DETAIL 1/– DRIP IRRIGATION EMITTER LAYOUT
NOT TO SCALE

PLANT PIT SIZE TABLE	
PLANT SIZE	PIT SIZE - ROOTBALL PLUS
1 GAL	6" ALL AROUND
5 GAL	8" ALL AROUND
15 GAL	10" ALL AROUND
24" BOX	12" ALL AROUND

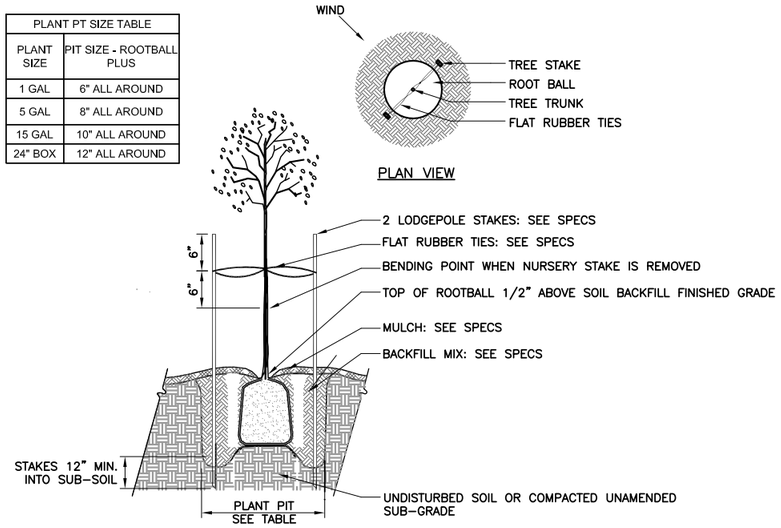

SECTION 3/– TREE PLANTING & STAKING
NOT TO SCALE

PLANT PIT SIZE TABLE	
PLANT SIZE	PIT SIZE - ROOTBALL PLUS
4"POT	3" ALL AROUND
1 GAL	6" ALL AROUND
5 GAL	8" ALL AROUND
15 GAL	10" ALL AROUND

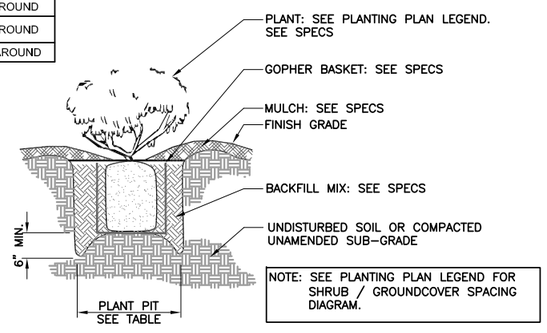

SECTION 2/– SHRUB/GROUNDCOVER PLANTING
NOT TO SCALE

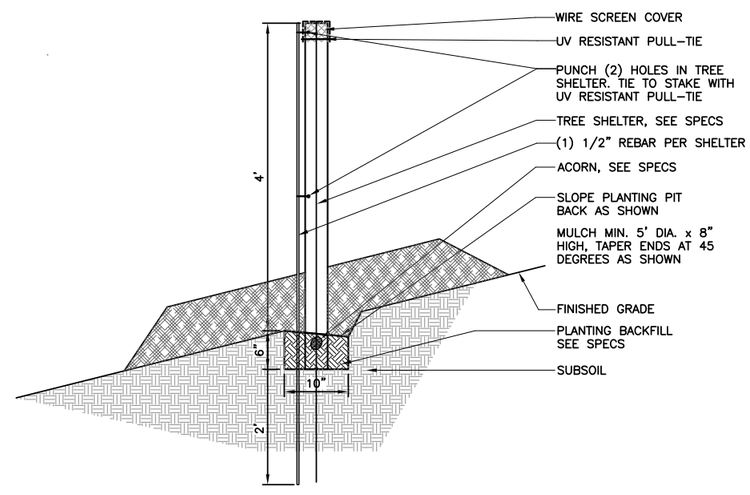

SECTION 4/– TREE SHELTER/ACORN PLANTING
NOT TO SCALE

REDUCED HALF SIZE (11X17)

REV	DESCRIPTION	DATE	APPR.
A	30% REVIEW SUBMITTAL	11/14	TS
B	60% REVIEW SUBMITTAL	4/16	TS

REFERENCE INFORMATION AND NOTES

bellinger foster steinmetz
425 Pacific Street, Suite 201
Monterey, CA 93940
PH 831.646.1383
www.bfsla.com

DATE 4–16–12
DESIGN A. PAL
DRAWN K. BISSETT
CHECKED X.X.

ENGINEERING CERTIFICATION
PROJECT ENGINEER DATE

Santa Clara Valley Water District
ACCEPTED BY DISTRICT

PROJECT NAME AND SHEET DESCRIPTION:
PERMANENTE CREEK FLOOD PROTECTION PROJECT
RANCHO SAN ANTONIO
IRRIGATION AND PLANTING DETAILS

SCALE: AS SHOWN
VERIFY SCALES: 0 1" BAR IS ONE INCH ON ORIGINAL DRAWING IF NOT ONE INCH ON THIS SHEET, ADJUST SCALES ACCORDINGLY

PROJECT NUMBER: 26244001
SHEET CODE: L–12
SHEET NUMBER: OF

DOCUMENT NUMBER: XXXX–X–0000–0000000.00
USERNAME:
FILENAME: F:\PRODUCTION\Projects\2010\10.013\CAD\10013_05PlantirrDet