South Orange County Wastewater Authority

Stabilization of Confluence of Sulphur and Aliso Creeks

Orange County, California

Conceptual Alternatives Report

Draft
October 2012

TETRA TECH
17885 Von Karman Ave, Suite 500
Irvine, California 92614

This page intentionally left blank

Stabilization of Confluence of Sulphur and Aliso Creeks

Orange County, California

Conceptual Alternatives Report

Draft
October 2012

Prepared for:
Orange County
South Orange County Wastewater Authority

Prepared by:
Tetra Tech
17885 Von Karman Ave, Suite 500
Irvine, California 92614
(949) 809-5000

This page intentionally left blank

EXECUTIVE SUMMARY

The Aliso Creek watershed which includes Aliso Creek (main stream) and several tributaries, including Sulphur Creek, is located in Orange County on the coast of Southern California. It drains a long, narrow coastal watershed from the Cleveland National Forest to the Pacific Ocean. This study focuses on a lower portion of Sulphur Creek near its confluence with Aliso Creek in the vicinity of Aliso Creek Road and Alicia Parkway within the City of Laguna Niguel. The limit of the project extends from approximately 500 feet downstream of the confluence (downstream limit) to just upstream of the Alicia Parkway culvert crossing on Sulphur Creek (upstream limit).

The study reach downstream of the Alicia Parkway culvert is a natural channel with channel banks which are very high and steep (south and north bank) or near vertical (north bank), caused by channel erosion and invert degradation. Visual assessment revealed that steep existing banks appeared to lack stability and are likely to be subjected to slope failure if no remediation or improvement is provided to the study reach. In order to protect the existing banks and overbank facilities including roadway, underground utilities, and culturally sensitive areas against potential future erosion and bank failure, three conceptual alternatives were evaluated. Also, construction cost of each alternative was estimated for comparison purpose.

Three conceptual-level design alternatives were developed to remediate the current degradation:

- Alternative 1 – Sheet Pile / Secant Pile Walls
- Alternative 2 – Reinforced Concrete Box (RCB) Culvert Extension
- Alternative 3 – Drop Structures

Hydraulic analysis was performed using an existing HEC-RAS model from previous studies for the existing condition model and as a basis to develop alternative design conditions model. The analysis provided hydraulic parameters necessary to size design elements of each alternative

Alternative 1 was by far the most expensive alternative. Substituting a portion of sheet pile wall with relatively less expensive secant piles along the south bank would reduce the cost by 5%, but the alternative was still more expensive than other alternatives. However, this alternative would generate almost no disturbance to the existing environment and habitat within the floodplain, as most of the construction would take place along the top of banks where the existing road would provide construction access. It should be noted that this alternative would not provide protection against degradation along the channel bottom.

Alternative 2 would provide the most efficient protection to the existing banks and streambed by conveying flood water downstream through the RCB culvert. However, this alternative may generate the most disturbance to the existing habitat and environment by placing the minimum 12 feet high concrete structure and fill over floodplain. The proposed low flow swale would provide necessary water for new habitat to be created over the fill, but because channel geometry and hydrologic and hydraulic conditions would change significantly, further biological and environmental assessments should be performed.

The estimated construction cost for Alternative 3 is far less than Alternatives 1 and 2. This alternative would protect existing channel geometry against erosion by providing milder invert slope, reducing flow velocity. Additionally, combination of fill and riprap along banks would provide some stability to existing banks.

Comparison of the estimated construction costs for all three alternatives is presented in the table below.

Alternative	Construction Cost
1(Sheet Pile Only)	$9,872,700
1(Sheet Pile & Secant Pile)	$9,343,800
2	$4,479,000
3	$1,317,000

It should be noted that no biological and environmental assessment was performed to assess future impacts of these alternatives for this study. Since the project area includes environmentally sensitive habitats, any future plan formation or development of construction design should include close coordination with and involvement of biological and environmental expertise.

TABLE OF CONTENTS

EXECUTIVE SUMMARY V

TABLE OF CONTENTS VII

LIST OF FIGURES VII

LIST OF TABLES VIII

LIST OF APPENDICES VIII

1. INTRODUCTION 1

1.1 PURPOSE AND SCOPE OF WORK 1
1.2 EXISTING CONDITIONS 4
1.3 SURVEY MAPPING 5

2. HYDRAULICS ASSESSMENTS 7

2.1 PREVIOUS HYDRAULIC MODEL 7
2.2 DEVELOPMENT HYDRAULIC MODELS 7
2.2.1 Existing Condition Model *7*
2.2.2 Alternative Condition Models *7*
2.2.3 Hydraulic Results *8*
2.3 FUTURE IMPROVEMENTS TO HYDRAULIC MODELS 10

3. EVALUATION OF ALTERNATIVES 11

3.1 FORMULATION OF ALTERNATIVES 11
3.2 ALTERNATIVE 1 (SHEET PILE/SECANT PILE WALLS) 11
3.3 ALTERNATIVE 2 (RCB CULVERT EXTENSION WITH LOW FLOW SWALE) 13
3.3.1 Riprap Sizing *15*
3.4 ALTERNATIVE 3 (DROP STRUCTURES) 15
3.4.1 Riprap Sizing *16*
3.5 ENVIRONMENTAL CONSIDERATIONS 17
3.6 GEOTECHNICAL DESIGN CONSIDERATIONS 18

4. COST ESTIMATES 19

4.1 ALTERNATIVE 1 (SHEET PILE / SECANT PILE WALLS) 20
4.2 ALTERNATIVE 2 (RCB CULVERT EXTENSION W/ LOW FLOW SWALE) 22
4.3 ALTERNATIVE 3 (DROP STRUCTURES) 23
4.4 SUMMARY OF CONSTRUCTION COSTS 24

5. REFERENCES 25

LIST OF FIGURES

Figure 1.1 – Vicinity Map 2
Figure 1.2 – Location Map 3
Figure 1.3 – Typical Bank Erosion 4
Figure 1.4 – Existing (3) 12'x12' RCB under Alicia Parkway 4
Figure 1.5 – Existing Grouted Riprap Placement (South Bank) 5
Figure 2.1 – HEC-RAS Cross Section Locations (Existing Conditions) 8
Figure 3.1 – Typical Section of Sheet Pile Wall (Alternative 1) 12
Figure 3.2 – Typical Section of RCB Culvert Extension (Alternative 2) 14
Figure 3.3 – Typ. Section of Bank Protection downstream of Confluence (Alternatives 2 and 3) 14
Figure 3.4 – Typical Section of Drop Structures (Alternative 3) 16

Figure 3.5 – Required Grouted Riprap Thickness as a Function of Flow Velocity..... 17

LIST OF TABLES

Table 2.1 – WSEs from the Existing Condition Model & Alternative No.1 Model..... 8
Table 2.2 – WSEs from the Alternative No.2 Model 9
Table 2.3 – WSEs from the Alternative No.3 Model 9
Table 3.1 – Sheet Pile / Secant Pile Walls 12
Table 3.2– Computed Maximum Riprap Size and Thickness (Alternative No.2)..... 15
Table 3.3– Computed Maximum Riprap Size and Thickness (Alternative No.3)..... 16
Table 4.1 – Cost Estimate for Alternative 1 (Sheet Pile Walls) 20
Table 4.2 – Cost Estimate for Alternative 1 (Sheet Pile / Secant Pile Walls) 21
Table 4.3 – Cost Estimate for Alternative 2 (RCB Culvert Extension w/ Low Flow Swale) 22
Table 4.4 – Cost Estimate for Alternative 3 (Drop Structures) 23
Table 4.5 – Estimated Construction Cost for Each Alternative 24

LIST OF APPENDICES

A. HEC-RAS Results

B. Alternatives Plans

C. CHANLPRO Output Printouts

D. Cost Estimates

1. INTRODUCTION

The Aliso Creek watershed which includes Aliso Creek (main stream) and several tributaries, including Sulphur Creek, is located in Orange County on the coast of Southern California (Figure 1.1). It drains a long, narrow coastal watershed from the Cleveland National Forest to the Pacific Ocean. The terrain is generally hilly, and varies from being somewhat steep in the upper reaches, to being somewhat flat in the middle reaches. The lower portion has steep hillsides surrounding a narrow canyon. The 34.6 square mile watershed includes portions of Lake Forest, Aliso Viejo, Mission Viejo, Laguna Niguel, Laguna Hills, and Laguna Beach.

This study focuses on a lower portion of Sulphur Creek near its confluence with Aliso Creek in the vicinity of Aliso Creek Road and Alicia Parkway within the City of Laguna Niguel (Figure 1.2). The limit of the project extends from approximately 500 feet downstream of the confluence (downstream limit) to just upstream of the Alicia Parkway culvert crossing on Sulphur Creek (upstream limit).

Currently, the study reach downstream of the Alicia Parkway culvert is a natural channel with channel banks which are very high and steep (south and north bank) or near vertical (north bank), caused by channel erosion and invert degradation. The north bank, which lies between converging Aliso and Sulphur Creeks, is a culturally sensitive area. On the south bank, there is an existing roadway and underground utility lines, including a 36-inch ETM pipe, located approximately parallel to the existing roadway.

1.1 Purpose and Scope of Work

The purpose of this study is to evaluate the existing conditions of the study reach near the confluence area between Aliso Creek and Sulphur Creek, explore various conceptual design alternatives to provide stabilization of existing banks to protect existing facilities and culturally sensitive area. Conceptual-level design drawings were prepared to show the layout of the alternatives. A planning level cost estimate was prepared for each alternative, for comparison purposes only. The study was based on the existing hydraulic analysis to hydraulically size project elements.

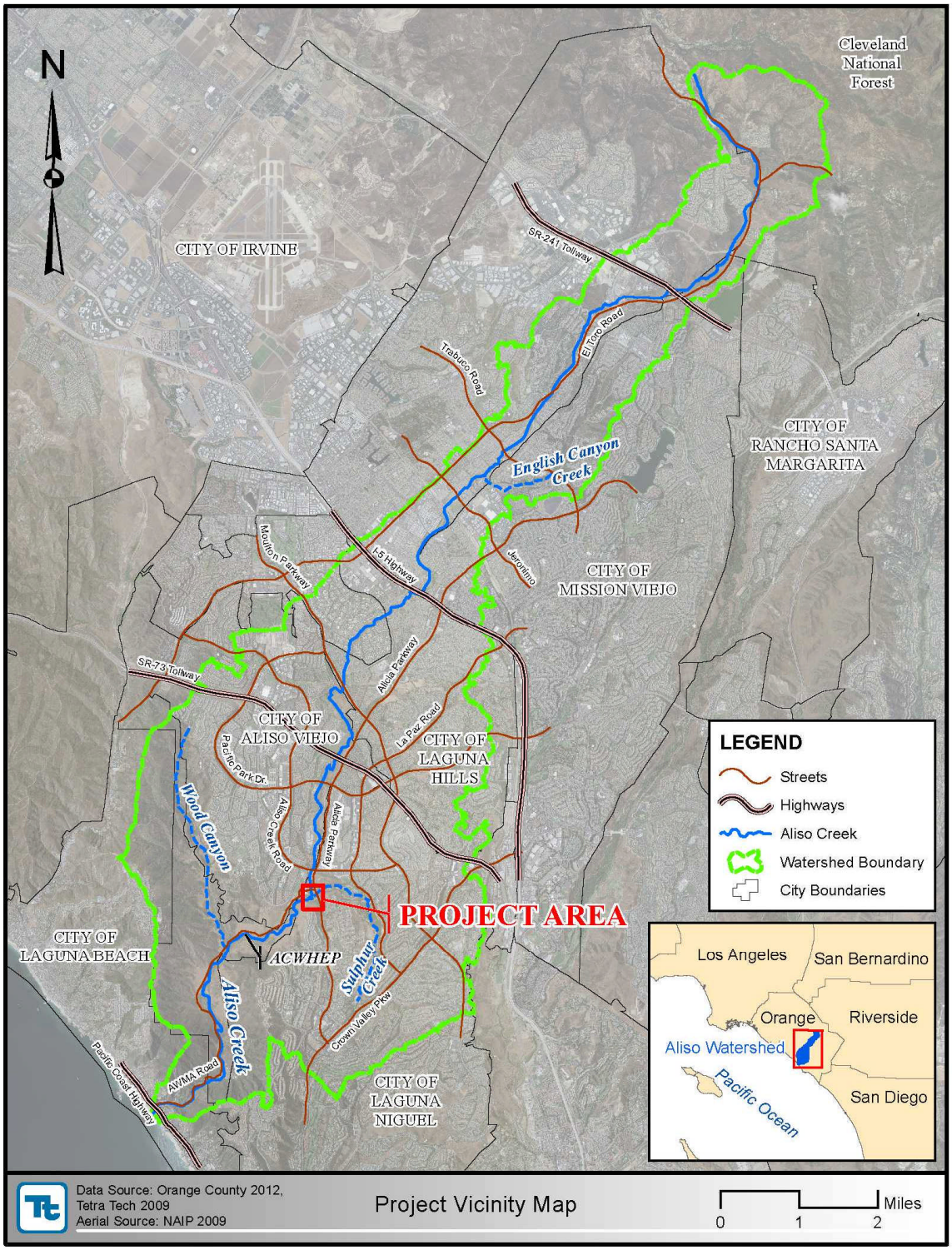

Figure 1.1 – Vicinity Map

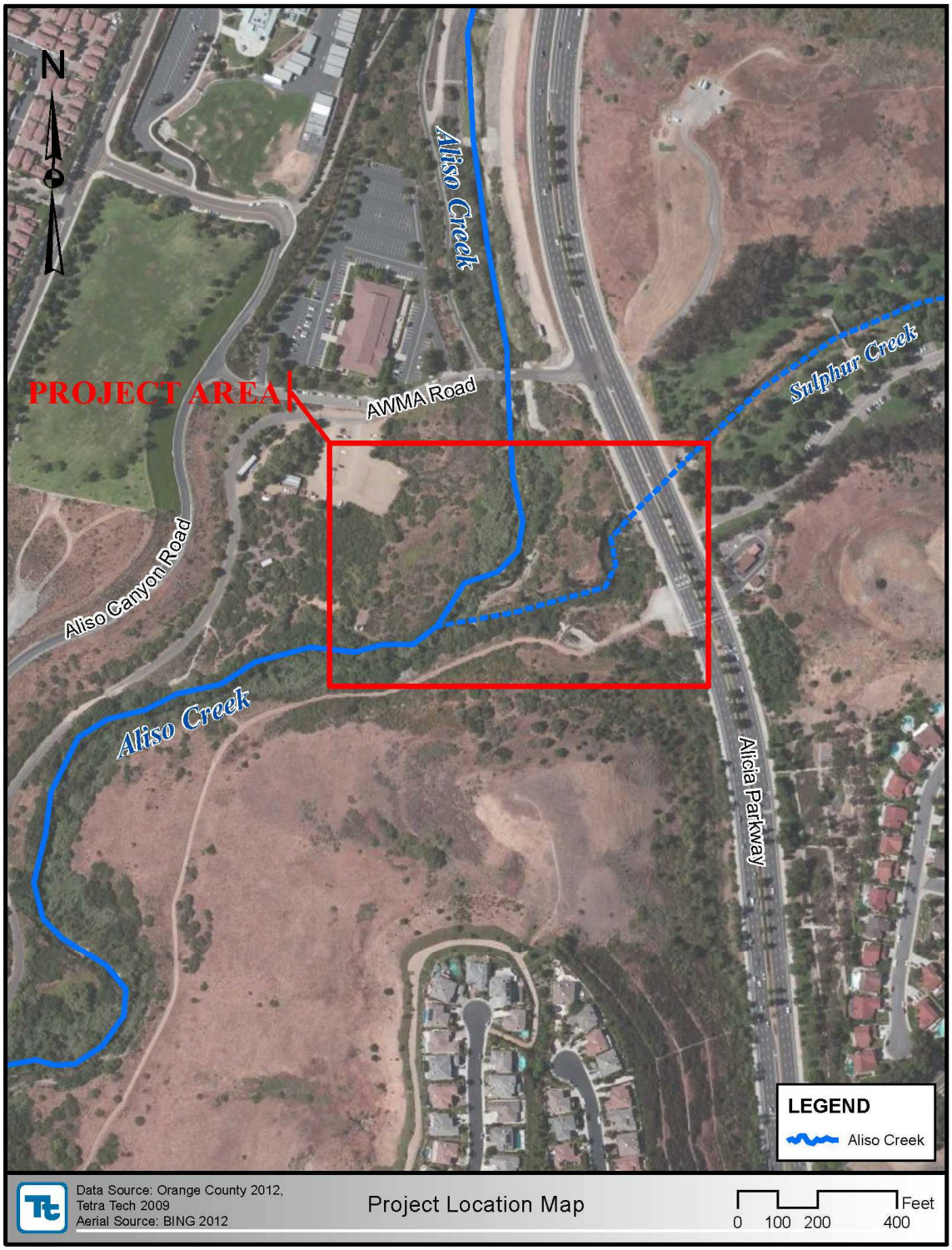

Figure 1.2 – Location Map

1.2 Existing Conditions

Various locations within the project reach are shown on Figures 1.3 and 1.4.

Figure 1.3 – Typical Bank Erosion

Figure 1.4 – Existing (3) 12'x12' RCB under Alicia Parkway

Figure 1.5 – Existing Grouted Riprap Placement (South Bank)

1.3 Survey Mapping

The existing topographic mapping of the project area was provided by the County of Orange in March 25, 2008 for the Aliso Creek Mainstream Ecosystem Restoration Study, conducted by Tetra Tech (Tetra Tech, 2008). Its 1-foot interval, bank-to-bank mapping was generated from 1:4,300 scale LIDAR photo taken at an altitude of 2,000 feet above terrain. This mapping covers Aliso Creek from downstream of the ACHWEP drop structure to upstream of the Skate Park north of Aliso Creek Road Bridge and Sulphur Creek from its confluence with Aliso Creek to immediately upstream of the culvert under Alicia Parkway.

Although this existing topographic mapping was surveyed five years prior to this project, it was assumed that for the level of detail that this study requires, this 2008 survey mapping would be sufficient to be used to achieve the project goals. It is recommended that more recent survey would be conducted for the construction level design in the future.

The horizontal control of the topographic mapping is based on the California Coordinate System (CCS83) Zone VI, North American Datum of 1983 (NAD 83), and the vertical control is based on the North American Vertical Datum of 1988 (NAVD 88). All units are in U.S. survey feet.

This page intentionally left blank

2. HYDRAULICS ASSESSMENTS

2.1 Previous Hydraulic Model

Per the Scope of Work, the existing hydraulic models from previous hydraulic studies were utilized to evaluate hydraulic parameters of existing conditions for this project and used as a basis to develop the proposed condition hydraulic model in order to hydraulically size project elements. For this study, the existing Hydrologic Engineering Center River Analysis System (HEC-RAS) model from the Lower Aliso Creek Erosion Assessment study (Tetra Tech, 2012), prepared by Tetra Tech for the South Orange County Wastewater Authority (SOCWA) of the County of Orange, was used as a base model to simulate existing conditions of Sulphur Creek. This model only extended from the Aliso Creek confluence to the downstream face of the existing culvert under Alicia Parkway. Additionally, the existing HEC-RAS model from the DRAFT Aliso Creek F4 Geomorphic Assessment study (Tetra Tech, 2010), prepared by Tetra Tech for the U.S. Army Corps of Engineers, Los Angeles District, was used as necessary to provide additional geometric information along the Aliso Creek.

No new hydrologic analysis was performed for this study. The discharge of 3,150 cfs for the 100-year flood event from the existing 2012 HEC-RAS model, described above, was selected as a design discharge for the study.

It should be noted that the previous models were developed and used for specific purposes of those particular studies, and any hydraulic parameters including water surface elevations (WSEs), resulting from these previous models and subsequent alternative condition models, should not be used as absolute design parameters to determine future construction level design plans.

2.2 Development Hydraulic Models

2.2.1 Existing Condition Model

To create an existing condition project hydraulic model, the existing 2012 HEC-RAS model along the Sulphur Creek, described in Section 2.1, was improved to include the existing (3) 12’x12’ reinforced concrete box (RCB) culvert under Alicia Parkway, based on the available as-built plans (County, 1968, & County, 1999). In addition, the cross sections along Aliso Creek in vicinity of the confluence from the existing 2010 HEC-RAS model were incorporated into the project model. The layout of cross sections used for the project is shown on Figure 2.1.

2.2.2 Alternative Condition Models

The existing condition model from Section 2.2.1 was revised to reflect the three (3) conceptual design alternative conditions. Specifics of the alternative conditions including typical sections are described in Section 3.

A HEC-RAS model in general has limitations in modeling a RCB culvert when the system includes grade breaks and curves inside the culvert. Therefore, for Alternative 2, the RCB culvert

was modeled in HEC-RAS as a concrete channel with two piers and without cover. This simplification would be valid as long as the culvert system flows in unpressurized conditions.

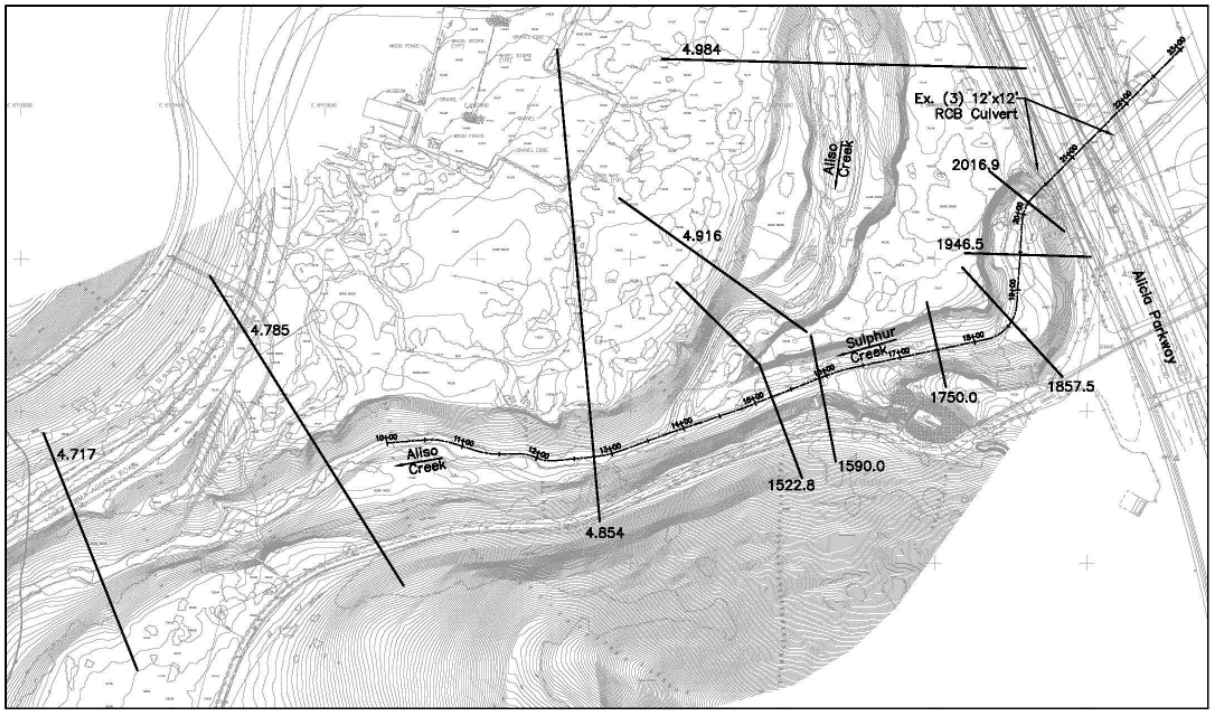

Figure 2.1 – HEC-RAS Cross Section Locations (Existing Conditions)

2.2.3 Hydraulic Results

Hydraulic results from the existing condition model and three alternative conditions models are presented in Tables 2.1 through 2.3. Tables also include hydraulic parameters along Aliso Creek downstream of the confluence. The results from the Alternative No.1 model are the same as those from the existing conditions model, because the design elements of the Alternative No.1 do not make direct contact with or impact to the channel flow.

Table 2.1 – WSEs from the Existing Condition Model & Alternative No.1 Model

Reach	RS	Q (cfs)	Invert (ft)	WSE (ft)	Velocity (ft/s)	Depth (ft)	TOB (Left) (ft)	TOB (Right) (ft)	Froude No.
Sulphur Creek	2253.17	3150.00	136.23	140.51	10.37	4.28	149.06	149.06	1.01
	2222.17	3150.00	130.19	139.00	8.94	8.81	143.02	143.02	0.53
	2129.45	Ex. RCB Culvert under Alicia Parkway							
	2038.90	3150.00	127.20	131.50	11.39	4.30	143.51	143.50	1.00
	2027.80	3150.00	118.98	123.07	24.41	4.09	143.24	143.50	2.44
	2016.90	3150.00	118.23	122.59	22.44	4.36	142.49	142.75	2.17
	1946.50	3150.00	117.64	127.12	5.19	9.48	140.50	142.22	0.35
	1857.50	3150.00	117.32	126.97	4.82	9.65	134.16	137.48	0.31

Table 2.1 – WSEs from the Existing Condition Model & Alternative No.1 Model									
Reach	RS	Q (cfs)	Invert (ft)	WSE (ft)	Velocity (ft/s)	Depth (ft)	TOB (Left) (ft)	TOB (Right) (ft)	Froude No.
	1750.00	3150.00	117.14	125.26	9.67	8.12	138.67	140.08	0.72
	1590.00	3150.00	115.66	123.26	10.05	7.60	135.93	139.83	0.74
	1522.80	3150.00	115.15	122.85	8.89	7.70	137.89	138.98	0.63
Aliso Creek D/S of Confl	4.85	3150.00	112.80	121.56	9.63	8.76	142.86	141.21	0.70
	4.79	3150.00	111.82	120.26	7.55	8.44	139.27	138.18	0.61
	4.72	3150.00	110.68	117.33	10.37	6.65	135.33	136.90	0.87

Table 2.2 – WSEs from the Alternative No.2 Model									
Reach	RS	Q (cfs)	Invert (ft)	WSE (ft)	Velocity (ft/s)	Depth (ft)	TOB (Left) (ft)	TOB (Right) (ft)	Froude No.
Sulphur Creek	2253.17	3150.00	136.23	140.52	10.32	4.29	149.06	149.06	1.00
	2222.17	3150.00	130.19	139.00	8.94	8.81	143.02	143.02	0.53
	2129.45	Ex. RCB Culvert under Alicia Parkway							
	2038.90	3150.00	127.56	133.76	14.12	6.20	139.56	139.56	1.00
	2027.80	3150.00	125.40	129.57	20.97	4.17	137.40	137.40	1.81
	2016.90	3150.00	123.27	126.88	24.22	3.61	135.27	135.27	2.25
	1989.88	3150.00	118.00	121.05	28.67	3.05	130.00	130.00	2.89
	1946.50	3150.00	117.77	121.41	24.01	3.64	129.77	129.77	2.22
	1857.50	3150.00	117.30	121.50	20.84	4.20	129.30	129.30	1.79
	1750.00	3150.00	116.73	121.69	17.65	4.96	128.73	128.73	1.40
	1590.00	3150.00	115.89	121.45	15.73	5.56	127.89	127.89	1.18
	1522.80	3150.00	115.15	122.85	8.89	7.70	137.89	138.98	0.63
Aliso Creek D/S of Confl	4.85	3150.00	112.80	121.56	9.63	8.76	142.86	141.21	0.70
	4.79	3150.00	111.82	120.26	7.55	8.44	139.27	138.18	0.61
	4.72	3150.00	110.68	117.33	10.37	6.65	135.33	136.90	0.87

Table 2.3 – WSEs from the Alternative No.3 Model									
Reach	RS	Q (cfs)	Invert (ft)	WSE (ft)	Velocity (ft/s)	Depth (ft)	TOB (Left) (ft)	TOB (Right) (ft)	Froude No.
Sulphur Creek	2253.17	3150.00	136.23	140.52	10.31	4.29	149.06	149.06	1.00
	2222.17	3150.00	130.19	139.00	8.94	8.81	143.02	143.02	0.53
	2129.45	Ex. RCB Culvert under Alicia Parkway							
	2038.90	3150.00	128.11	134.46	7.23	6.35	143.51	142.92	0.53
	1976.00	3150.00	127.67	132.58	8.85	4.91	140.50	142.22	0.78
	1964.00	3150.00	127.67	131.93	10.57	4.26	140.50	142.22	1.01
	1955.00	3150.00	124.67	131.07	6.55	6.40	140.50	142.22	0.51
	1905.00	3150.00	124.26	131.00	6.17	6.74	140.50	142.22	0.47
	1826.00	3150.00	123.62	129.87	9.38	6.25	134.16	137.48	0.80

Table 2.3 – WSEs from the Alternative No.3 Model									
Reach	RS	Q (cfs)	Invert (ft)	WSE (ft)	Velocity (ft/s)	Depth (ft)	TOB (Left) (ft)	TOB (Right) (ft)	Froude No.
	1814.00	3150.00	123.62	129.19	11.11	5.57	134.16	137.48	1.00
	1805.00	3150.00	120.62	127.12	11.07	6.50	139.08	140.49	0.90
	1755.00	3150.00	120.21	126.77	10.91	6.56	138.67	140.08	0.88
	1676.00	3150.00	119.57	126.40	10.32	6.83	135.93	139.83	0.81
	1664.00	3150.00	119.57	125.68	11.99	6.11	135.93	139.83	1.00
	1655.00	3150.00	116.57	123.44	10.73	6.87	135.93	139.83	0.82
	1522.80	3150.00	115.15	122.85	8.89	7.70	137.89	138.98	0.63
Aliso Creek D/S of Confl	4.85	3150.00	112.80	121.56	9.63	8.76	142.86	141.21	0.70
	4.79	3150.00	111.82	120.26	7.55	8.44	139.27	138.18	0.61
	4.72	3150.00	110.68	117.33	10.37	6.65	135.33	136.90	0.87

For the existing condition and the Alternative No.1 condition model, the depth of water ranged from 7.60 to 9.48 feet downstream of the steep drop, located immediately downstream of the existing culvert. Flow velocity varied from 4.82 to 10.05 feet per second (fps) after it peaked to 24.41 fps over the steep drop.

For the Alternative No.2 condition model, the flow runs mostly in a supercritical regime. The depth of water is less than 7.70 feet validating the assumption that the flow would travel in an unpressurized condition through the RCB culvert. In a future construction level design, effects of minor losses such as bend loss or superelevation should be considered as appropriate. Flow velocity reaches 28.67 fps over the steep slope coming down from the existing RCB culvert and slows down to less than 20 fps as it flows downstream. The exit velocity from the culvert is approximately 10.73 fps requiring an energy dissipator to reduce flow velocity and protect the channel bottom from erosion.

For the Alternative No.3 condition model, installation of a series of drop structures would replace the steep drop near the existing culvert with more controlled smaller drops with milder invert slopes between them. Flow velocity ranges from 6.17 to 11.11 fps with most of the high velocity flow over riprap drop structures or riprap protection immediately downstream of them. This alternative include fill placement along the channel bottom which would raise the proposed invert elevations. However, resulting WSEs are still predicted to be lower than both south and north top of bank elevations.

The outputs from the HEC-RAS models are included in Appendix A.

2.3 Future Improvements to Hydraulic Models

The HEC-RAS models are based on the County's 2008 survey information. It is recommended a new survey would be performed along the project reach prior to a construction level design in order to ensure the models reflect the most current geographical conditions.

3. EVALUATION OF ALTERNATIVES

Remediation and protection measures which must be provided in this area in order to protect the culturally sensitive area (north overbank) and existing roadway and utilities (south overbank) and/or to provide natural habitat to existing species are discussed below.

Both north and south banks of Sulphur Creek would be protected along a reach from the existing Alicia Parkway culvert to the Aliso Creek confluence. On the south bank, the proposed bank protection would extend further downstream by approximately 500 feet from the confluence.

To provide remediation and protection against channel degradation and scouring, three conceptual-level design alternatives were explored and are shown graphically in the alternatives plans (Appendix B).

3.1 Formulation of Alternatives

All three of the conceptual alternatives would protect the existing banks and provide natural habitats of varying magnitude. Each alternative incorporates consideration for improving existing grouted riprap on the south bank (near Station 16+80) and surface runoff drainage on the south overbank (near Station 16+30).

The conceptual alternatives are as follows:

- Alternative 1 (Sheet Pile/Secant Pile Walls)
- Alternative 2 (RCB Culvert Extension with Low Flow Swale)
- Alternative 3 (Drop Structures)

3.2 Alternative 1 (Sheet Pile/Secant Pile Walls)

Alternative 1 consists of the construction of sheet pile walls along north bank and either sheet pile wall or secant pile wall along south bank. Typical sections of the walls are presented in Figure 3.1. The total height of each individual sheet pile or secant pile would be the sum of the potentially exposed height (from top of the walls to the invert of the river) and embedment depth (from the invert to bottom tip). The walls would be driven or drilled vertically and completely into existing bank along top of bank, and no part of the walls would be exposed until a significant storm event removes soil in front of the walls. For this study, the embedment depths were assumed to be approximately 3 times and 2.5 times the height of the earth the walls need to retain, or the height of the potentially exposed heights, for the sheet pile and secant pile walls, respectively. This assumption should be verified and adjusted based on geotechnical and structural analyses during a future construction level design. The approximate heights of the walls were analyzed at various locations of the creek in order to determine a representative height of the walls as presented in Table 3.1.

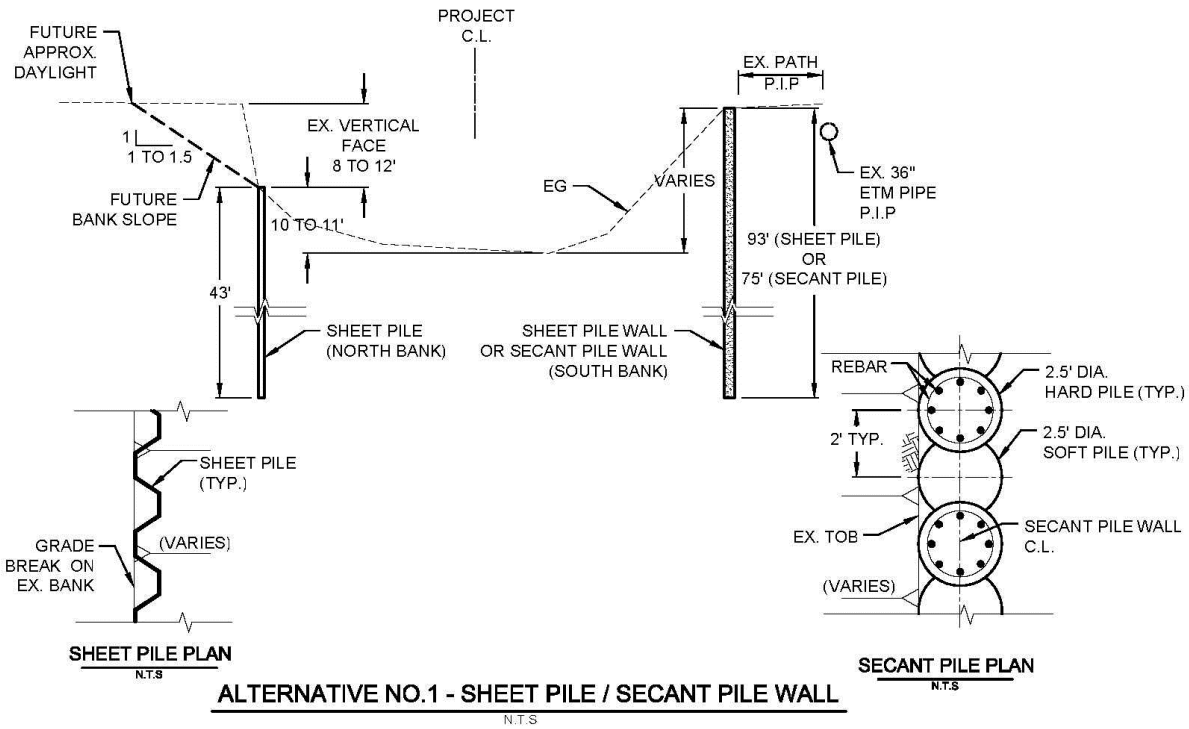

Figure 3.1 – Typical Section of Sheet Pile Wall (Alternative 1)

Table 3.1 – Sheet Pile / Secant Pile Walls

Location	Station	Exposed Face Height [ft]	Embedment Depth [ft]	Total Vertical Length [ft]	Average Vertical Length [ft]
North Bank (Sheet Pile)	15+50	10.0	30.0	40.0	**43**
	17+50	11.0	33.0	44.0	
	19+00	11.0	33.0	44.0	
South Bank (Sheet Pile)	15+50	20.9	62.7	83.6	**93**
	17+50	21.5	64.5	86.0	
	19+00	27.0	81.0	108.0	
South Bank (Secant Pile)	15+50	20.9	47.0	67.9	**75**
	17+50	21.5	48.4	69.9	
	19+00	27.0	60.8	87.8	

Based on Table 3.1, the sheet pile walls would be approximately 43 feet and 93 feet in total vertical length along the north bank and south bank, respectively. If the secant pile wall is used for the south bank, it would be approximately 75 feet in total vertical length.

On the north bank, sheet pile walls would be driven into the bank along the vertical grade break just below a near vertical face, which is about 8 to 12 feet below top of bank. Because of limited

access allowed on the north overbank (culturally sensitive area), equipment necessary to drive sheet pile cannot be placed along the top of bank. A Giken-type pile driver equipment would drive in a new sheet pile one by one, while being supported by previous installed sheet piles. Existing bank sideslope above the sheet pile walls would eventually slough until it reaches a more stable slope.

Along top of the south bank, either sheet pile or secant pile walls would be driven or drilled. Secant pile walls are more rigid and generate less wall movements than sheet pile walls, but they usually require larger permanent footing. These walls are compared in total construction costs in Section 4.

A localized low point along the existing roadway on the south bank (near Station 16+30), which caused concentrated surface runoff and created drainage rills at top of bank, would be remediated by placing compacted fill and redirecting surface runoff in this area towards existing grouted riprap placement. Stability of the existing grouted riprap placement near Station 16+80 would be improved by constructing grouted riprap toedown.

3.3 Alternative 2 (RCB Culvert Extension with Low Flow Swale)

Alternative 2 consists of the construction of a RCB culvert extension from the downstream face of the existing (3) 12’x12’ RCB culvert underneath Alicia Parkway to the Aliso Creek confluence. Additionally, the earthen low flow swale would be constructed along a slightly different alignment than that of the RCB culvert extension. The low flow swale, which would capture low flow from upstream of the existing culvert and bypass the existing culvert through a wall-attached pipe, would provide creek flow necessary for preservation of natural habitat between Alicia Parkway and the Aliso Creek confluence. The construction of the culvert extension and subsequent fill placement along the project reach would also provide stability to the existing banks which are currently experiencing channel erosion. It should be noted that this alternative would fill over the existing natural habitat; however, new habitat would be created with a new low flow swale providing water. Typical sections of this alternative are shown in Figure 3.2.

On the south bank, a combination of riprap at lower elevation and soil stabilization at upper elevation, as shown on Figure 3.3, would be constructed and extend downstream from the Aliso Creek confluence. Riprap would be placed up to the calculated 100-year water surface elevation. Soil stabilization would likely be coir fabric or open block system that would hold existing soil bank in place while providing protection against surficial runoff from top of banks.

The existing storm drain outlet structure located approximately 250 feet south of the project would be replaced with a new structure. The proposed structure would discharge low flow into an existing swale downstream through a small outlet at the invert and would discharge larger flows into a new connecting RCB culvert. The low flow traveling over the existing swale would flow through a bypass pipe under the existing dip crossing and then into a new low flow swale. This would require removal of existing grouted rock on the south bank and placement of compacted fill in the area.

A localized low point along the existing roadway on south bank (near Station 16+30), which caused concentrated surface runoff and created drainage rills at top of bank, would be remediated by placing compacted fill and redirecting surface runoff in this area towards the new low flow swale.

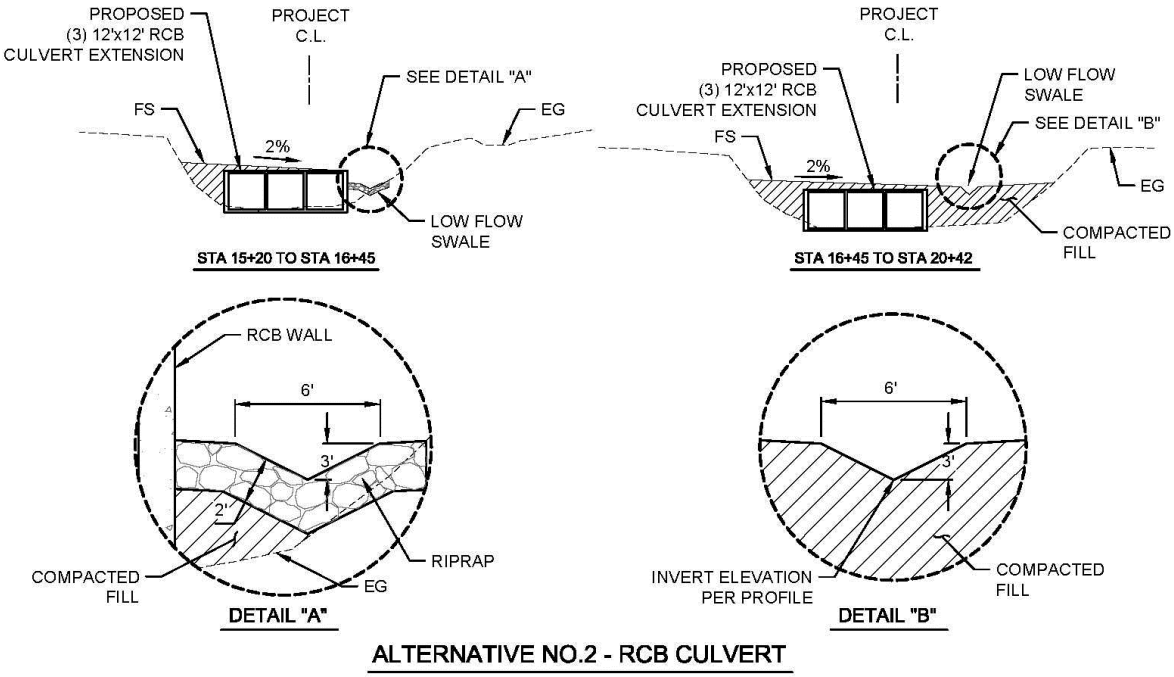

Figure 3.2 – Typical Section of RCB Culvert Extension (Alternative 2)

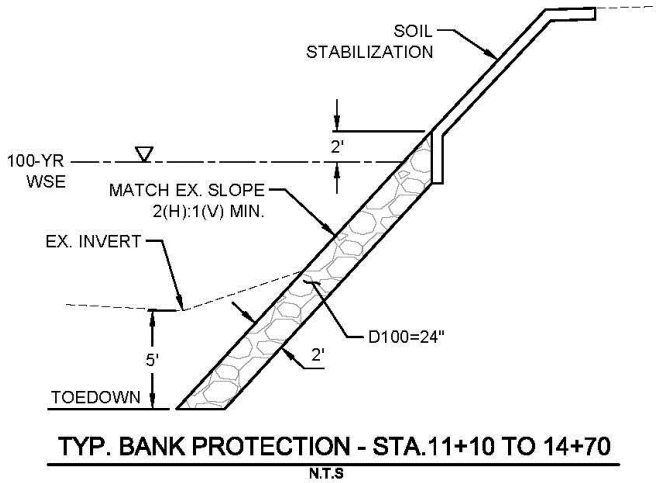

Figure 3.3 – Typ. Section of Bank Protection downstream of Confluence (Alternatives 2 and 3)

3.3.1 Riprap Sizing

Based on the CHANLPRO computer program developed by the U.S. Army Corps of Engineers (Corps), (USACE, 1998), the required "ungrouted" riprap stone size and its placement thickness for the bank protection were evaluated for the hydraulic conditions of the Sulphur Creek (Table 2.2). The outputs of the CHANLPRO computer program are included in Appendix C.

Table 3.2– Computed Maximum Riprap Size and Thickness (Alternative No.2)

River Station	Max. Flow Depth (feet)	Max. Flow Velocity (feet/second)	Maximum Size	Thickness
			(inches)	
4.854	8.76	9.63	24	24

The riprap bank protection would be 24 inches thick with D_{100} of 24 inches.

3.4 Alternative 3 (Drop Structures)

Alternative 3 consists of construction of a series of grouted riprap drop structures as shown in Figure 3.4. A total of three (3) drop structures would include 50-foot long ungrouted riprap placed immediately downstream of each 3-foot drop structure. From the edges of each structure, ungrouted riprap and compacted fill would be placed at 3(H):1(V) slope to existing banks, providing stability to the eroding banks. This bank protection would receive ungrouted riprap protection only (north bank) or a combination of riprap at lower elevation and soil stabilization at upper elevation (south bank) as shown on Figure 3.3. The bank protection would continue downstream along the south bank to approximately 500 feet from the Aliso Creek confluence. Along the bank protection, riprap would be placed up to the calculated 100-year water surface elevation. Soil stabilization would likely be coir fabric or open block system that would hold existing soil bank in place while providing protection against surficial runoff from top of banks.

Flow discharged from the existing storm drain structure, located approximately 250 feet south of the project, would be captured just upstream of the existing dip crossing at the roadway and routed to the an energy dissipator with a baffle structure at the south bank. This would require removal of existing grouted rock on the south bank and placement of compacted fill in the area.

A localized low point along the existing roadway on south bank (near Station 16+30), which caused concentrated surface runoff and created drainage rills at top of bank, would be remediated by placing compacted fill and redirecting surface runoff in this area.

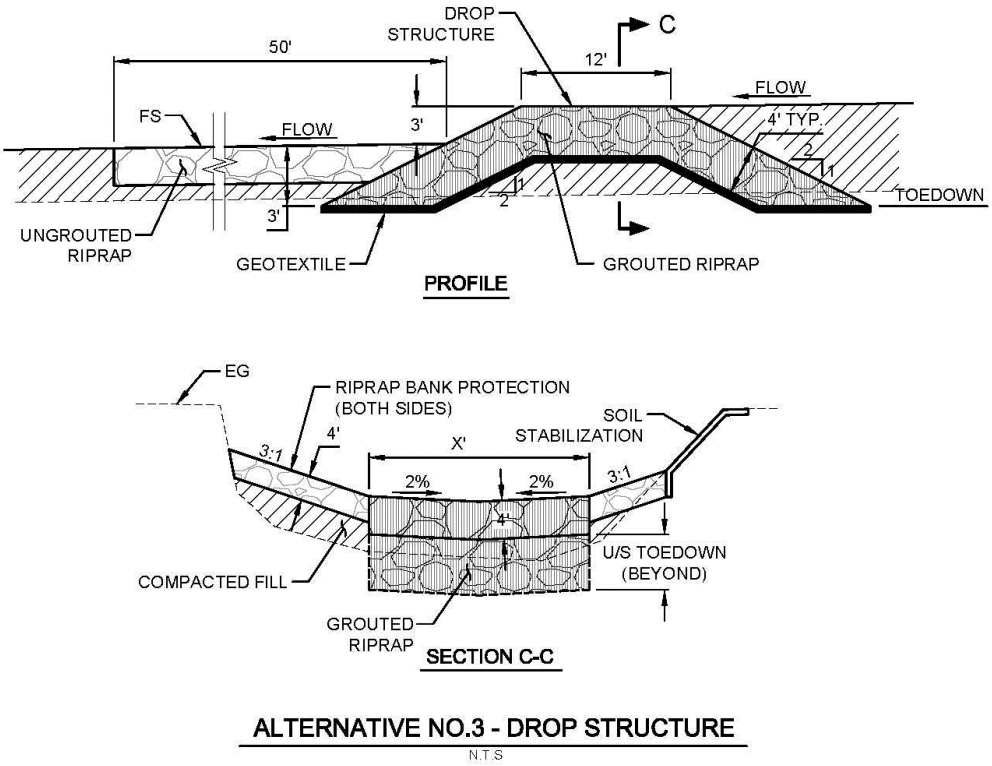

Figure 3.4 – Typical Section of Drop Structures (Alternative 3)

3.4.1 Riprap Sizing

Based on the CHANLPRO computer program developed by the Corps (USACE, 1998), the required "ungrouted" riprap stone size and its placement thickness for the bank protection were evaluated for the hydraulic conditions of the Sulphur Creek (Table 2.2). The outputs of the CHANLPRO computer program are included in Appendix C.

Table 3.3– Computed Maximum Riprap Size and Thickness (Alternative No.3)

Location	River Station	Max. Flow Depth (feet)	Max. Flow Velocity (feet/second)	Maximum Size	Thickness
				(inches)	
D/S of Confluence	4.854	8.76	9.63	24	24
U/S of Confluence	16+64	6.1	11.99	24	24
	19+64	4.3	10.57	18	18

The results show that the riprap bank protection would be 18 to 24 inches thick. However, considering the total quantity of riprap to be used for the project is relatively small, it was decided that the single riprap sizing of 24 inches thick with D_{100} of 24 would be used for the entire construction. Riprap protection located downstream of each drop structure would likely receive larger size riprap as it also needs to endure the plunging of the flow over the drop.

"Grouted" riprap material for the drop structures was also considered and analyzed. The relationship between the flow velocity and the required grouted riprap thickness is shown in Figure 3.5. The grouted riprap thickness would be approximately 16 inches (1.3 feet) for the maximum flow velocities of 11.99 fps (Table 3.3). For the design purpose, the grouted riprap placement thickness of 24 inches, or 2 feet, was selected for this study.

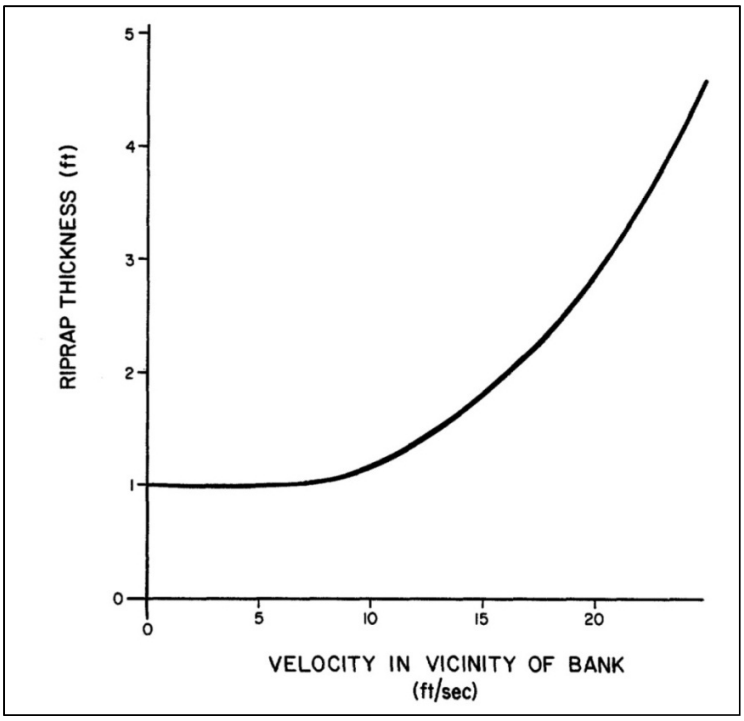

Source: FHWA 1989, Figure 57.

Figure 3.5 – Required Grouted Riprap Thickness as a Function of Flow Velocity

3.5 Environmental Considerations

The three alternatives described above would provide remediation to existing degraded banks and inverts, and protection to culturally sensitive areas and existing roadway and utilities. However, further environmental and biological assessments would be necessary to analyze impact to existing habitat and living species, which may be federally protected. Alternative 1 would cause the least impacts to the existing habitat as it includes mostly construction along banks. However, Alternatives 2 and 3 would require fill along the streambed and may involve recreation of habitats over finished surfaces.

No environmental analysis was performed for this study. The future planning phase would require an environmental analysis of the conceptual design alternatives to finalize the design details and selection of the preferred conceptual design alternative.

3.6 Geotechnical Design Considerations

No geotechnical boring or analysis was performed for this study. The future planning and construction-phase design would require geotechnical analysis to finalize the design details of a preferred conceptual design alternative.

4. COST ESTIMATES

For each alternative, a “rough order-of-magnitude” cost estimate was developed for comparison purposes only and should not be used for budgetary purposes. A detailed engineer’s estimate for construction cost would need to be prepared on the basis of the construction-level design in the future. These cost estimates, which are based on the typical sections shown in Section 3, assume uniform subsurface conditions throughout the project limits, a uniform application of the typical section for the project. No subsurface analysis was performed for this study, and an updated geotechnical exploration may alter the quantities shown in the cost estimates. Restoration and mitigation costs for any environmentally sensitive areas that are disturbed by the construction activities are not included in the cost estimates, because an estimation of this particular cost would involve input from environmental agencies and consultation with a biologist which are not available at this time. Additionally, any fees or permits required for construction or maintenance activities and real estate requirements for each alternative are not included.

Detailed information on the quantity calculations is provided in Appendix D.

4.1 Alternative 1 (Sheet Pile / Secant Pile Walls)

The construction cost of Alternative 1 was estimated for two separate cases: the first with sheet pile walls on both sides (Table 4.1) and the second with sheet pile wall on the north bank and secant pile wall on the south bank (Table 4.2). Installation cost for sheet pile wall on the north bank is more expensive than ones along the south bank, because the limited access to the top of north bank would require the use of Gilken-type pile drive equipment as explained in Section 3.2.

The estimated construction cost of Alternative 1 is $ 9,872,700 if sheet pile walls were used for both banks, while the estimated cost reduces to $ 9,343,800 if secant pile wall is used for the south bank instead of sheet pile wall.

Table 4.1 – Cost Estimate for Alternative 1 (Sheet Pile Walls)

	Contract Items	Unit	Quantity	Unit Cost	Total Cost
1	Mobilization	LS	1	$250,000	$250,000
2	Clearing and Grubbing	Acre	0.25	$7,500	$1,875
3	Sheet Pile Walls				
3.1	Sheet Piles (North Bank)	SF	22,575	$70	$1,580,250
3.2	Sheet Piles (South Bank)	SF	76,725	$45	$3,452,625
4	Surface Runoff Damage Remediation	CY	407	$35	$14,245
5	Grouted Riprap Placement with Toedown	CY	54	$165	$ 8,898
				Subtotal:	$5,307,893
				Planning, Engineering, &Design (@ 12%)	$636,947
				Construction Management (@ 12%)	$636,947
				Subtotal:	$6,581,787
				Contingencies (@ 50%)	$3,290,894
				Subtotal	$9,872,681
				Grand Total:	**$9,872,700**

Table 4.2 – Cost Estimate for Alternative 1 (Sheet Pile / Secant Pile Walls)					
	Contract Items	**Unit**	**Quantity**	**Unit Cost**	**Total Cost**
1	Mobilization	LS	1	$240,000	$240,000
2	Clearing and Grubbing	Acre	0.32	$7,500	$2,400
3	Sheet Pile / Secant Pile Walls				
3.1	Sheet Piles (North Bank)	SF	22,575	$70	$1,580,250
3.2	Secant Piles (South Bank)	LS	1	$3,177,750	$3,177,750
4	Surface Runoff Damage Remediation	CY	407	$35	$14,245
5	Grouted Riprap Placement with Toedown	CY	54	$165	$ 8,898
				Subtotal:	$5,023,543
				Planning, Engineering, &Design (@ 12%)	$602,825
				Construction Management (@ 12%)	$602,825
				Subtotal:	$6,229,193
				Contingencies (@ 50%)	$3,114,597
				Subtotal	$9,343,790
				Grand Total:	**$9,343,800**

4.2 Alternative 2 (RCB Culvert Extension w/ Low Flow Swale)

The estimated construction cost of Alternative 2 is approximately $4,479,000.

Table 4.3 – Cost Estimate for Alternative 2 (RCB Culvert Extension w/ Low Flow Swale)

	Contract Items	Unit	Quantity	Unit Cost	Total Cost
1	Mobilization	LS	1	$110,000	$110,000
2	Clearing and Grubbing	Acre	1.36	$7,500	$10,200
3.1	RCB Culvert Extension				
3.1.1	RCB Culvert Extension	LF	520	$3,500	$1,820,000
3.1.2	Riprap Protection (at Downstream End)	CY	385	$85	$32,741
3.1.3	Excavation	CY	2,296	$15	$34,440
3.1.4	Compacted Fill	CY	7,612	$30	$228,360
3.2	Low Flow Swale				
3.2.1	Low Flow Swale (Fine Grading)	SY	4,110	$1.50	$6,165
3.2.2	Low Flow Capturing System	LS	1	$1,500	$1,500
3.2.3	12" Bypass Pipe	LF	264	$155	$40,920
3.3	Bank Protection (South Bank D/S of Confluence)				
3.3.1	Riprap (Lower Elevation)	CY	597	$85	$50,745
3.3.2	Soil Stabilization (Upper Elevation)	SY	362	$30	$10,860
3.4	Storm Drain Improvement				
3.4.1	Storm Drain Outlet Structure Replacement	LS	1	$10,000	$10,000
3.4.2	Connecting Culvert	LF	260	$115	$29,900
3.4.3	Bypass Culvert under Dip Crossing w/ Headwalls	LS	1	$7,500	$7,500
4	Surface Runoff Damage Remediation	CY	407	$35	$14,245
				Subtotal:	$2,408,076
				Planning, Engineering, &Design (@ 12%)	$288,969
				Construction Management (@ 12%)	$288,969
				Subtotal:	$2,986,014
				Contingencies (@ 50%)	$1,493,007
				Subtotal:	$4,479,021
				Grand Total:	**$4,479,000**

4.3 Alternative 3 (Drop Structures)

The estimated construction cost of Alternative 3 is $1,317,000.

Table 4.4 – Cost Estimate for Alternative 3 (Drop Structures)

	Contract Items	Unit	Quantity	Unit Cost	Total Cost
1	Mobilization	LS	1	$30,000	$ 30,000
2	Clearing and Grubbing	Acre	1.46	$7,500	$10,950
3.1	Drop Structures				
3.1.1	Drop Structures	CY	807	$165	$109,000
3.1.2	Ungrouted Riprap Protection (D/S)	CY	694	$85	$55,556
3.1.3	Excavation	CY	575	$15	$ 8,625
3.1.4	Compacted Fill	CY	4,381	$30	$109,525
3.2	Bank Protection (North Bank)				
3.2.1	Riprap	CY	637	$85	$50,960
3.3	Bank Protection (South Bank D/S of Confluence)				
3.3.1	Riprap (Lower Elevation)	CY	2,253	$85	$180,240
3.3.2	Soil Stabilization (Upper Elevation)	SY	1,170	$30	$7,020
3.4	SD System to Capture Low Flow from Ex. SD				
3.4.1	Culvert	LF	120	$115	$13,800
3.4.2	Inlet Structure	LS	1	$6,000	$6,000
3.4.3	Energy Dissipator w/ Baffle Structure	LS	1	$20,000	$20,000
4	Surface Runoff Damage Remediation	CY	407	$35	$14,245
				Subtotal:	$708,050
				Planning, Engineering, &Design (@ 12%)	$84,966
				Construction Management (@ 12%)	$84,966
				Subtotal:	$877,982
				Contingencies (@ 50%)	$438,991
				Subtotal:	$1,316,973
				Grand Total:	**$1,317,000**

4.4 Summary of Construction Costs

The estimated total construction cost for each conceptual design alternative is provided in Table 4.5.

Table 4.5 – Estimated Construction Cost for Each Alternative

Alternative	Construction Cost
1A	$9,872,700
1B	$9,343,800
2	$4,479,000
3	$1,317,000

5. REFERENCES

County. 1968. *Plans for the Construction of Narco Channel, Alicia Parkway to Sta. 82+00.00, Orange County, California.* As-built Construction Plans for the Orange County Flood Control District, County of Orange, April, 1968.

County. 1999. *Plans for the Construction of Alicia Parkway from 1970 ft. South of Aliso Creek Road to Avila Road, Orange County, California.* As-built Construction Plans for the Orange County Environmental Management Agency, County of Orange, August, 1991.

Tetra Tech, Inc. 2009. *Aliso Creek Mainstrem Ecosystem Restoration Study, Orange County, California.* Prepared for the U.S. Corps of Engineers, Los Angeles District, California, October, 2009.

Tetra Tech, Inc. 2010. DRAFT – *Aliso Creek F4 Geomorphic Assessment, Orange County, California.* Prepared for the U.S. Corps of Engineers, Los Angeles District, California, June 2010.

Tetra Tech, Inc. 2012. *Lower Aliso Creek Erosion Assessment*, Orange *County, California*. Prepared for the South Orange County Wastewater Authority (SOCWA), County of Orange, California, April 2012.

USACE. 1998. *User's Manual for CHANLPRO*, PC Program for Channel Protection Design. U.S. Army Corps of Engineers, Waterways Experiment Station. July 1998.

This page intentionally left blank

Appendix A
HEC-RAS Results

This page intentionally left blank

HEC-RAS Plan: Ex. & Alt1 Profile: 0.01-AEP

River	Reach	River Sta	Profile	Q Total	Min Ch El	W.S. Elev	Crit W.S.	E.G. Elev	E.G. Slope	Vel Chnl	Flow Area	Top Width	Froude # Chl
				(cfs)	(ft)	(ft)	(ft)	(ft)	(ft/ft)	(ft/s)	(sq ft)	(ft)	
Sulphur	Below Alicia Pkw	2253.17	0.01-AEP	3150.00	136.23	140.51	140.51	142.17	0.002350	10.37	303.81	92.52	1.01
Sulphur	Below Alicia Pkw	2222.17	0.01-AEP	3150.00	130.19	139.00	135.96	140.24	0.000447	8.94	352.49	53.67	0.53
Sulphur	Below Alicia Pkw	2129.45		Culvert									
Sulphur	Below Alicia Pkw	2038.9	0.01-AEP	3150.00	127.20	131.50	131.50	133.51	0.018936	11.39	276.66	69.39	1.00
Sulphur	Below Alicia Pkw	2027.8	0.01-AEP	3150.00	118.98	123.07	125.70	132.33	0.152646	24.41	129.03	41.40	2.44
Sulphur	Below Alicia Pkw	2016.9	0.01-AEP	3150.00	118.23	122.59	124.95	130.41	0.122738	22.44	140.38	42.45	2.17
Sulphur	Below Alicia Pkw	1981.7*	0.01-AEP	3150.00	117.93	126.85	124.83	127.84	0.006307	8.00	393.57	68.85	0.59
Sulphur	Below Alicia Pkw	1946.5	0.01-AEP	3150.00	117.64	127.12		127.54	0.002516	5.19	607.02	86.54	0.35
Sulphur	Below Alicia Pkw	1902.*	0.01-AEP	3150.00	117.48	127.02		127.44	0.001899	5.20	605.20	86.00	0.35
Sulphur	Below Alicia Pkw	1857.5	0.01-AEP	3150.00	117.32	126.97		127.33	0.002328	4.82	653.16	88.65	0.31
Sulphur	Below Alicia Pkw	1821.66*	0.01-AEP	3150.00	117.26	126.70		127.22	0.002820	5.76	546.51	78.36	0.38
Sulphur	Below Alicia Pkw	1785.83*	0.01-AEP	3150.00	117.20	126.28		127.06	0.005023	7.08	445.23	69.28	0.49
Sulphur	Below Alicia Pkw	1750.0	0.01-AEP	3150.00	117.14	125.26		126.71	0.013022	9.67	325.73	58.92	0.72
Sulphur	Below Alicia Pkw	1710.*	0.01-AEP	3150.00	116.77	124.66		126.21	0.011307	9.99	315.40	57.64	0.75
Sulphur	Below Alicia Pkw	1670.*	0.01-AEP	3150.00	116.40	124.17		125.75	0.011533	10.09	312.32	56.58	0.76
Sulphur	Below Alicia Pkw	1630.*	0.01-AEP	3150.00	116.03	123.69		125.28	0.011415	10.13	310.94	55.54	0.75
Sulphur	Below Alicia Pkw	1590.0	0.01-AEP	3150.00	115.66	123.26		124.83	0.010448	10.05	313.54	54.64	0.74
Sulphur	Below Alicia Pkw	1522.8	0.01-AEP	3150.00	115.15	122.85	121.09	124.07	0.008607	8.89	354.26	57.84	0.63
Aliso	Reach1	4.984	0.01-AEP	3150.00	116.88	123.86	123.86	125.44	0.012991	10.09	312.34	100.89	1.01
Aliso	Reach1	4.916	0.01-AEP	3150.00	113.27	123.40	119.17	123.81	0.001162	5.15	612.17	86.62	0.34
Aliso	Reach1	4.854	0.01-AEP	3150.00	112.80	121.56		123.00	0.005279	9.63	327.12	55.50	0.70
Aliso	Reach1	4.785	0.01-AEP	3150.00	111.82	120.26		121.15	0.004125	7.55	416.99	87.42	0.61
Aliso	Reach1	4.717	0.01-AEP	3150.00	110.68	117.33	116.87	119.00	0.008605	10.37	303.69	69.15	0.87

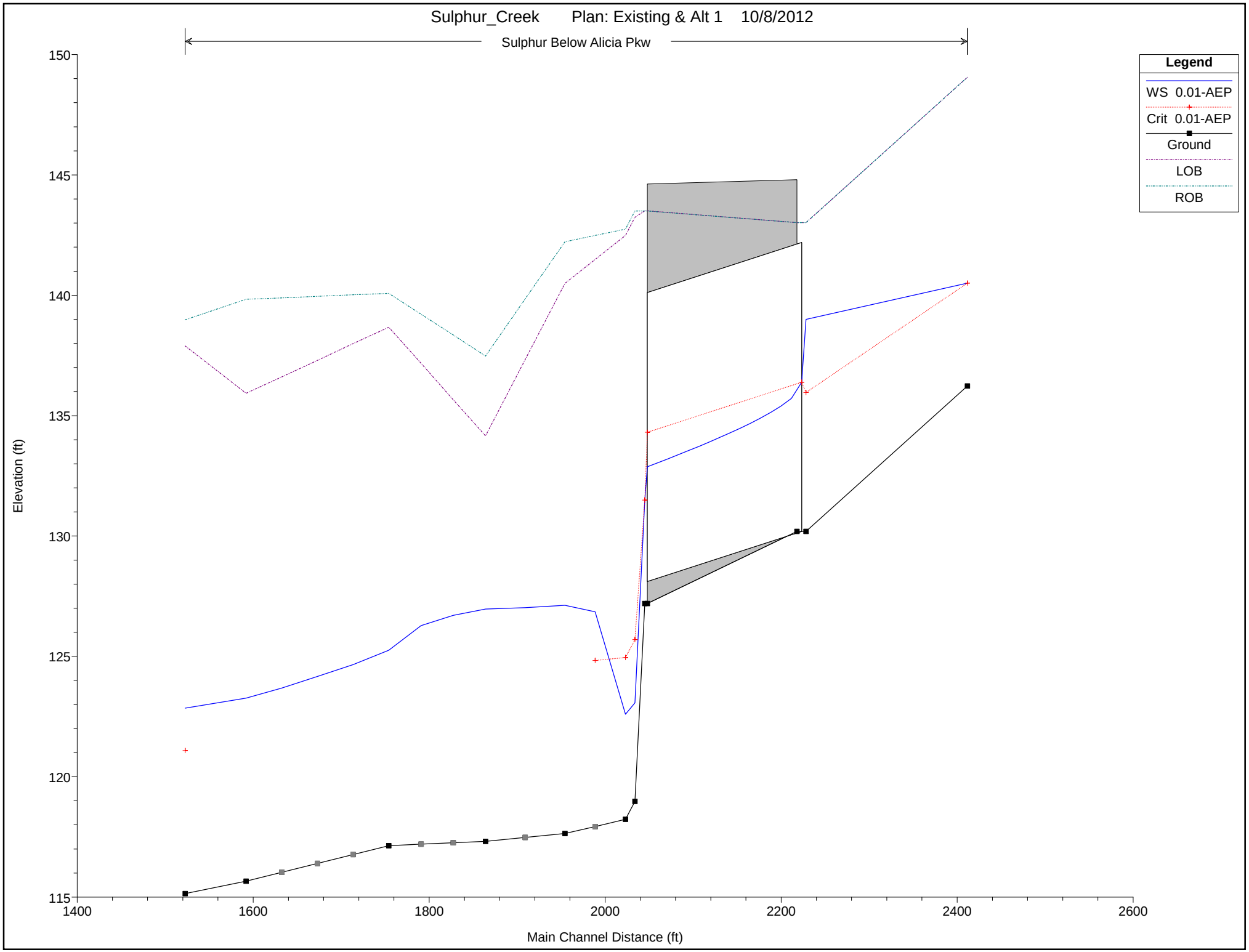
Sulphur_Creek Plan: Existing & Alt 1 10/8/2012
Sulphur Below Alicia Pkw
Legend
WS 0.01-AEP
Crit 0.01-AEP
Ground
LOB
ROB
Elevation (ft)
150
145
140
135
130
125
120
115
1400
1600
1800
2000
2200
2400
2600
Main Channel Distance (ft)

HEC-RAS Plan: Alt 2 Profile: 0.01-AEP

River	Reach	River Sta	Profile	Q Total	Min Ch El	W.S. Elev	Crit W.S.	E.G. Elev	E.G. Slope	Vel Chnl	Flow Area	Top Width	Froude # Chl
				(cfs)	(ft)	(ft)	(ft)	(ft)	(ft/ft)	(ft/s)	(sq ft)	(ft)	
Sulphur	Below Alicia Pkw	2253.17	0.01-AEP	3150.00	136.23	140.52	140.52	142.17	0.002311	10.32	305.37	92.52	1.00
Sulphur	Below Alicia Pkw	2222.17	0.01-AEP	3150.00	130.19	139.00	135.96	140.24	0.000447	8.94	352.49	53.67	0.53
Sulphur	Below Alicia Pkw	2129.45		Culvert									
Sulphur	Below Alicia Pkw	2038.9	0.01-AEP	3150.00	127.56	133.76	133.76	136.85	0.004599	14.12	223.03	36.00	1.00
Sulphur	Below Alicia Pkw	2027.8	0.01-AEP	3150.00	125.40	129.57	131.59	136.40	0.013478	20.97	150.25	36.00	1.81
Sulphur	Below Alicia Pkw	2016.9	0.01-AEP	3150.00	123.27	126.88	129.46	135.99	0.020210	24.22	130.07	36.00	2.25
Sulphur	Below Alicia Pkw	2003.39*	0.01-AEP	3150.00	120.63	123.90	126.82	135.00	0.026763	26.73	117.86	36.00	2.60
Sulphur	Below Alicia Pkw	1989.88	0.01-AEP	3150.00	118.00	121.05	124.19	133.82	0.032740	28.67	109.87	36.00	2.89
Sulphur	Below Alicia Pkw	1968.19*	0.01-AEP	3150.00	117.88	121.22	124.08	131.89	0.025318	26.21	120.16	36.00	2.53
Sulphur	Below Alicia Pkw	1946.5	0.01-AEP	3150.00	117.77	121.41	123.97	130.36	0.019719	24.01	131.21	36.00	2.22
Sulphur	Below Alicia Pkw	1902.*	0.01-AEP	3150.00	117.54	121.46	123.74	129.20	0.016068	22.33	141.09	36.00	1.99
Sulphur	Below Alicia Pkw	1857.5	0.01-AEP	3150.00	117.30	121.50	123.50	128.24	0.013260	20.84	151.13	36.00	1.79
Sulphur	Below Alicia Pkw	1821.66*	0.01-AEP	3150.00	117.11	121.54	123.31	127.59	0.011396	19.74	159.61	36.00	1.65
Sulphur	Below Alicia Pkw	1785.83*	0.01-AEP	3150.00	116.92	121.60	123.12	127.02	0.009798	18.68	168.59	36.00	1.52
Sulphur	Below Alicia Pkw	1750.0	0.01-AEP	3150.00	116.73	121.69	122.93	126.53	0.008387	17.65	178.44	36.00	1.40
Sulphur	Below Alicia Pkw	1710.*	0.01-AEP	3150.00	116.52	121.90	122.72	126.01	0.006715	16.27	193.66	36.00	1.24
Sulphur	Below Alicia Pkw	1670.*	0.01-AEP	3150.00	116.31	121.88	122.51	125.71	0.006117	15.71	200.48	36.00	1.17
Sulphur	Below Alicia Pkw	1630.*	0.01-AEP	3150.00	116.10	121.70	122.30	125.49	0.006037	15.64	201.46	36.00	1.16
Sulphur	Below Alicia Pkw	1590.0	0.01-AEP	3150.00	115.89	121.45	122.09	125.30	0.006139	15.73	200.21	36.00	1.18
Sulphur	Below Alicia Pkw	1522.8	0.01-AEP	3150.00	115.15	122.85	121.09	124.07	0.008607	8.89	354.26	57.84	0.63
Aliso	Reach1	4.984	0.01-AEP	3150.00	116.88	123.86	123.86	125.44	0.012951	10.07	312.66	100.92	1.01
Aliso	Reach1	4.916	0.01-AEP	3150.00	113.27	123.40	119.17	123.81	0.001162	5.15	612.17	86.62	0.34
Aliso	Reach1	4.854	0.01-AEP	3150.00	112.80	121.56		123.00	0.005279	9.63	327.12	55.50	0.70
Aliso	Reach1	4.785	0.01-AEP	3150.00	111.82	120.26		121.15	0.004125	7.55	416.99	87.42	0.61
Aliso	Reach1	4.717	0.01-AEP	3150.00	110.68	117.33	116.87	119.00	0.008605	10.37	303.69	69.15	0.87

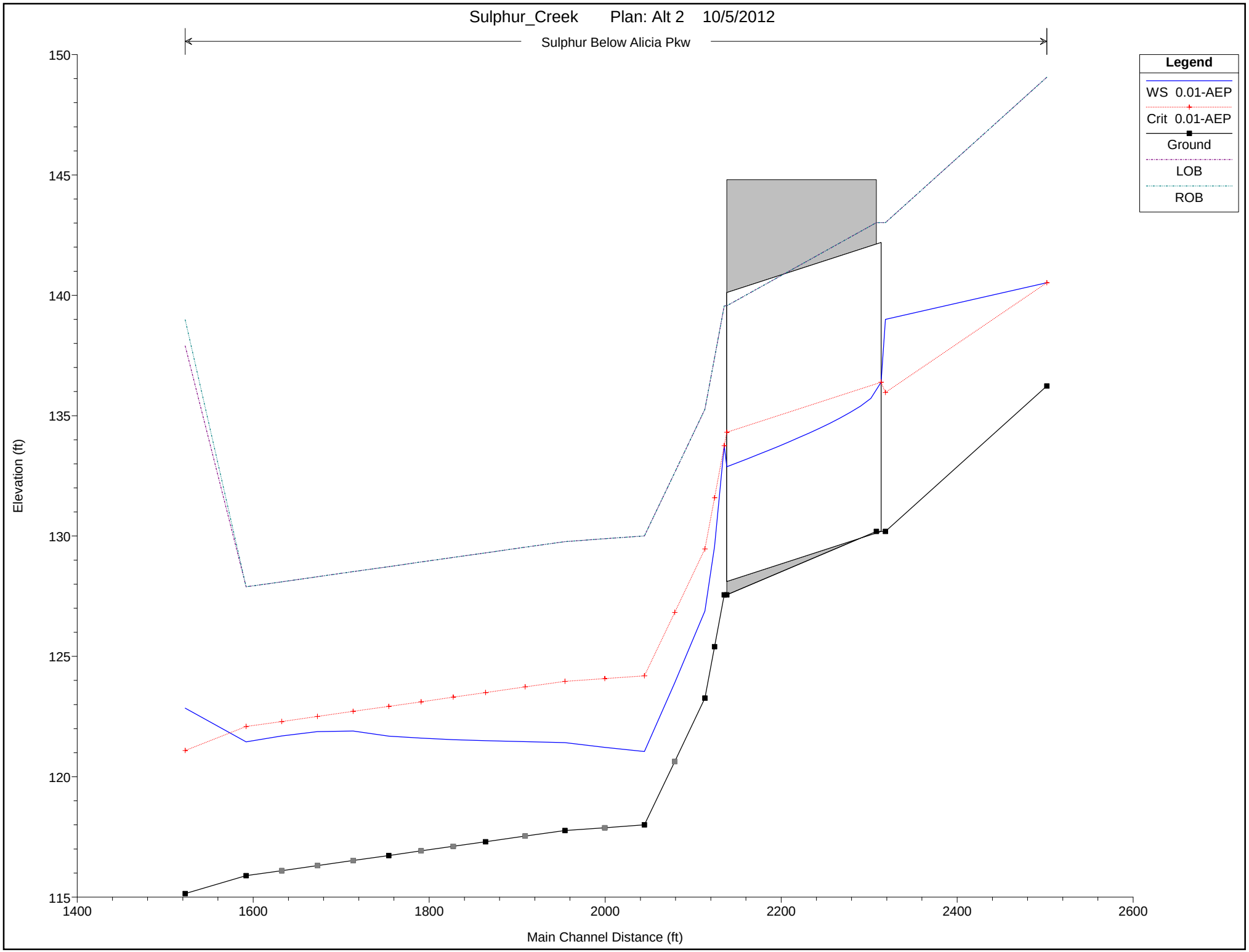
Sulphur_Creek Plan: Alt 2 10/5/2012
Sulphur Below Alicia Pkw
Legend
WS 0.01-AEP
Crit 0.01-AEP
Ground
LOB
ROB
Elevation (ft)
150
145
140
135
130
125
120
115
1400
1600
1800
2000
2200
2400
2600
Main Channel Distance (ft)

HEC-RAS Plan: Alt 3 Profile: 0.01-AEP

River	Reach	River Sta	Profile	Q Total	Min Ch El	W.S. Elev	Crit W.S.	E.G. Elev	E.G. Slope	Vel Chnl	Flow Area	Top Width	Froude # Chl
				(cfs)	(ft)	(ft)	(ft)	(ft)	(ft/ft)	(ft/s)	(sq ft)	(ft)	
Sulphur	Below Alicia Pkw	2253.17	0.01-AEP	3150.00	136.23	140.52	140.52	142.17	0.002310	10.31	305.45	92.52	1.00
Sulphur	Below Alicia Pkw	2222.17	0.01-AEP	3150.00	130.19	139.00	135.96	140.24	0.000447	8.94	352.49	53.67	0.53
Sulphur	Below Alicia Pkw	2129.45		Culvert									
Sulphur	Below Alicia Pkw	2038.9	0.01-AEP	3150.00	128.11	134.46		135.27	0.005509	7.23	435.98	75.51	0.53
Sulphur	Below Alicia Pkw	2007.45*	0.01-AEP	3150.00	127.89	133.03	133.03	134.91	0.012394	11.01	286.00	76.06	1.00
Sulphur	Below Alicia Pkw	1976	0.01-AEP	3150.00	127.67	132.58	131.93	133.80	0.005567	8.85	356.08	90.13	0.78
Sulphur	Below Alicia Pkw	1964	0.01-AEP	3150.00	127.67	131.93	131.93	133.66	0.009178	10.57	298.13	87.20	1.01
Sulphur	Below Alicia Pkw	1955	0.01-AEP	3150.00	124.67	131.07		131.73	0.002596	6.55	480.97	92.60	0.51
Sulphur	Below Alicia Pkw	1905	0.01-AEP	3150.00	124.26	131.00		131.59	0.002216	6.17	510.36	93.53	0.47
Sulphur	Below Alicia Pkw	1865.5*	0.01-AEP	3150.00	123.94	130.62		131.46	0.003402	7.36	428.12	87.17	0.59
Sulphur	Below Alicia Pkw	1826	0.01-AEP	3150.00	123.62	129.87	129.19	131.24	0.005380	9.38	335.81	79.47	0.80
Sulphur	Below Alicia Pkw	1814	0.01-AEP	3150.00	123.62	129.19	129.19	131.11	0.008601	11.11	283.42	74.00	1.00
Sulphur	Below Alicia Pkw	1805	0.01-AEP	3150.00	120.62	127.12	126.74	129.02	0.007751	11.07	284.64	60.59	0.90
Sulphur	Below Alicia Pkw	1755	0.01-AEP	3150.00	120.21	126.77	126.33	128.62	0.007477	10.91	288.64	60.85	0.88
Sulphur	Below Alicia Pkw	1715.5*	0.01-AEP	3150.00	119.89	126.57	126.01	128.33	0.006310	10.64	295.98	60.96	0.85
Sulphur	Below Alicia Pkw	1676	0.01-AEP	3150.00	119.57	126.40	125.68	128.05	0.005795	10.32	305.27	60.15	0.81
Sulphur	Below Alicia Pkw	1664	0.01-AEP	3150.00	119.57	125.68	125.68	127.92	0.008681	11.99	262.62	58.95	1.00
Sulphur	Below Alicia Pkw	1655	0.01-AEP	3150.00	116.57	123.44		125.23	0.006510	10.73	293.56	55.06	0.82
Sulphur	Below Alicia Pkw	1522.8	0.01-AEP	3150.00	115.15	122.85	121.09	124.07	0.008607	8.89	354.26	57.84	0.63
Aliso	Reach1	4.984	0.01-AEP	3150.00	116.88	123.87	123.87	125.44	0.012906	10.06	313.03	100.95	1.01
Aliso	Reach1	4.916	0.01-AEP	3150.00	113.27	123.40		123.81	0.001162	5.15	612.17	86.62	0.34
Aliso	Reach1	4.854	0.01-AEP	3150.00	112.80	121.56		123.00	0.005279	9.63	327.13	55.50	0.70
Aliso	Reach1	4.785	0.01-AEP	3150.00	111.82	120.26	118.68	121.15	0.004125	7.55	417.00	87.42	0.61
Aliso	Reach1	4.717	0.01-AEP	3150.00	110.68	117.33	116.88	119.00	0.008605	10.37	303.69	69.15	0.87

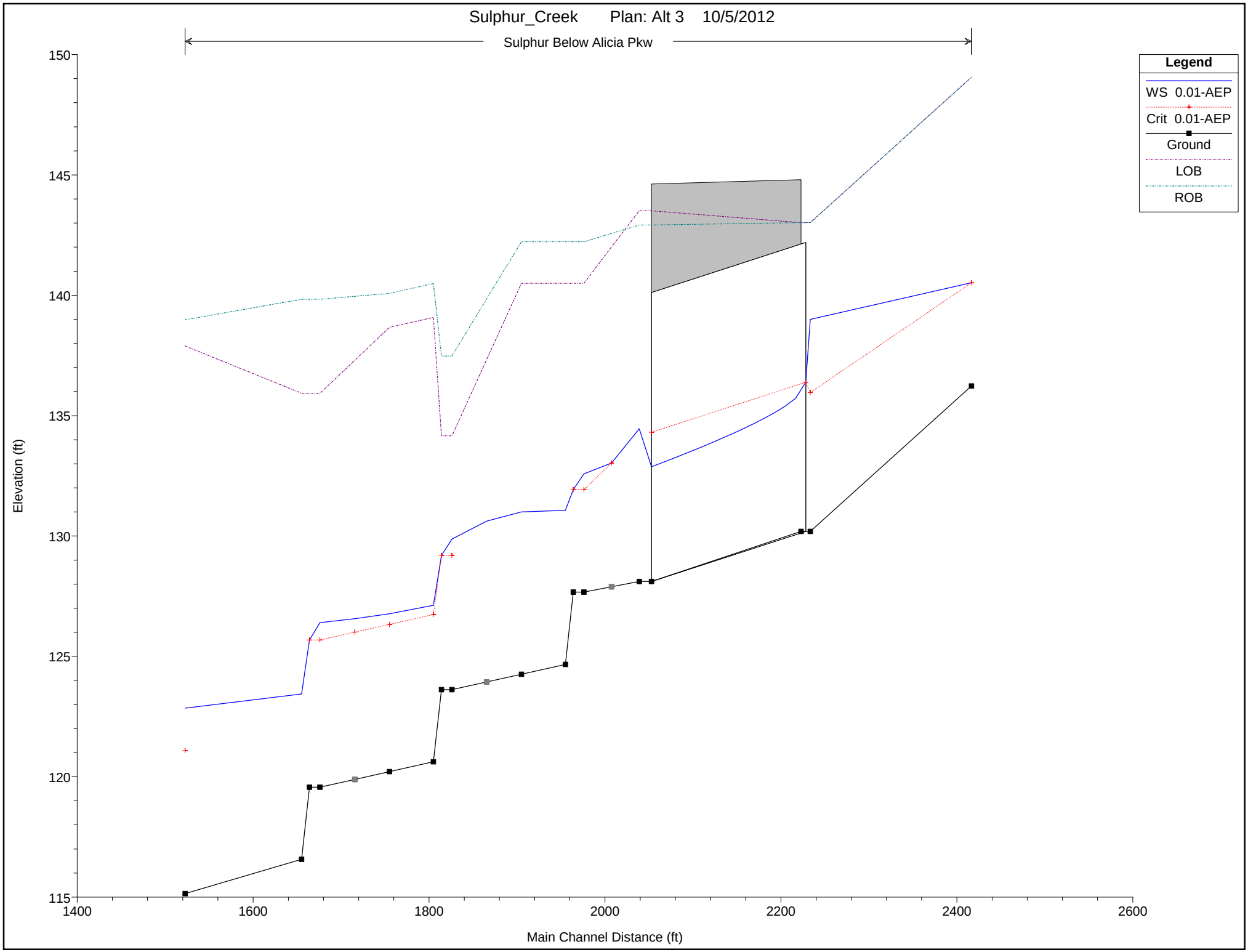
Sulphur_Creek Plan: Alt 3 10/5/2012
Sulphur Below Alicia Pkw
Legend
WS 0.01-AEP
Crit 0.01-AEP
Ground
LOB
ROB
Elevation (ft)
150
145
140
135
130
125
120
115
1400
1600
1800
2000
2200
2400
2600
Main Channel Distance (ft)

Appendix B
Alternatives Plans

This page intentionally left blank

ORANGE COUNTY, CALIFORNIA

STABILIZATION OF CONFLUENCE OF SULPHUR & ALISO CREEKS

CONCEPTUAL ALTERNATIVES PLANS

CITY OF LAGUNA NIGUEL

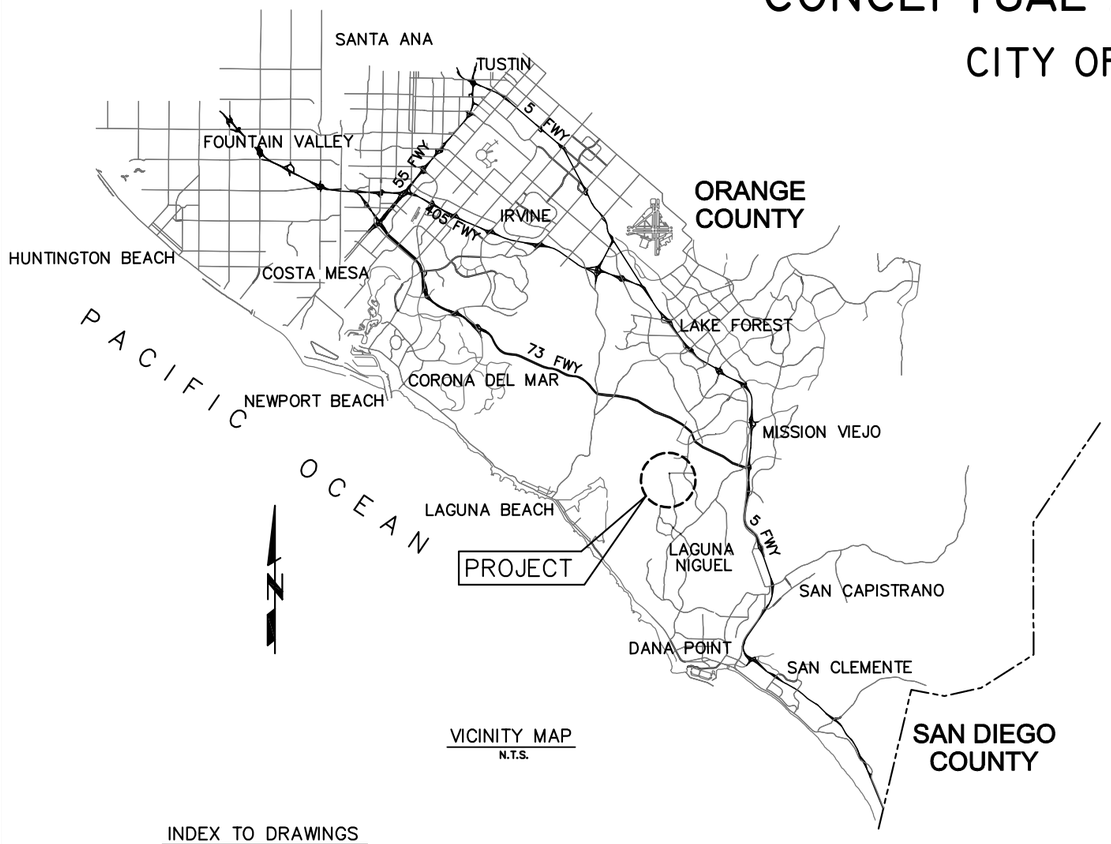

VICINITY MAP
N.T.S.

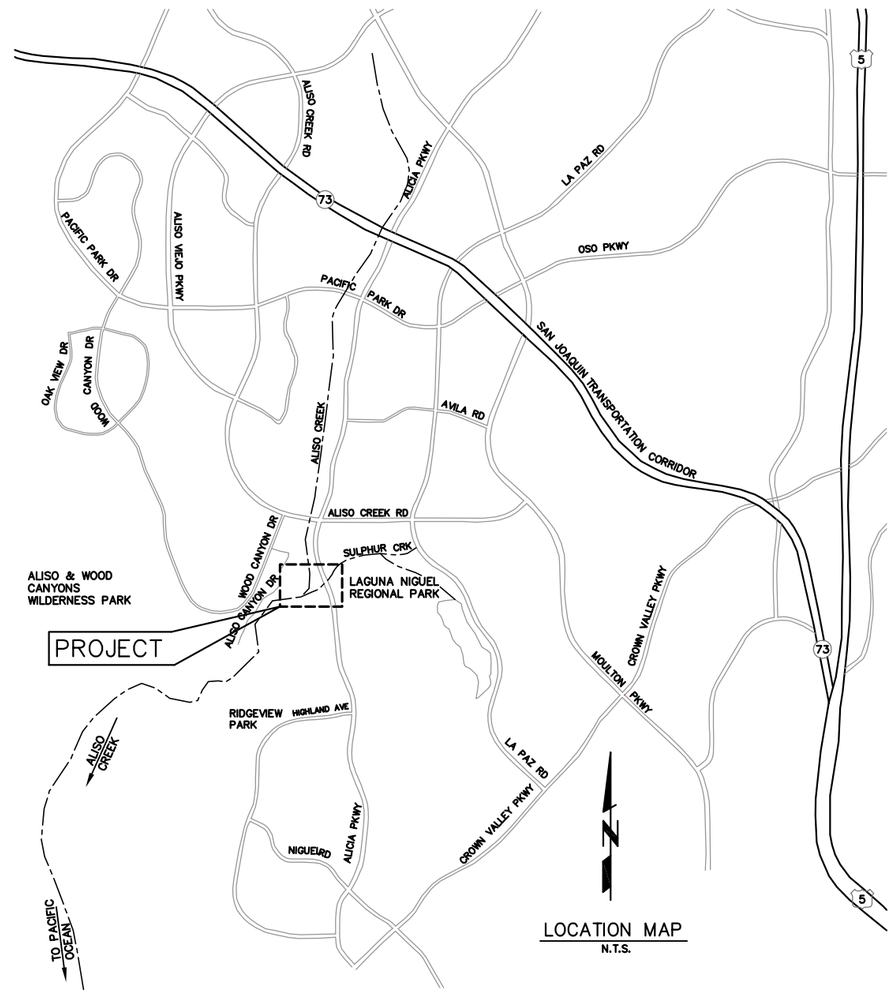

LOCATION MAP
N.T.S.

INDEX TO DRAWINGS

SHEET NO.	TITLE
1	GENERAL PLAN
2	ALTERNATIVE NO. 1 – SHEET PILE / SECANT PILE WALLS
3	ALTERNATIVE NO. 2 – (3) 12'x12' RCB EXTENSION
4	ALTERNATIVE NO. 3 – DROP STRUCTURES
5	TYPICAL SECTIONS

TETRA TECH, INC.
17885 Von Karman Avenue, Suite 500
Irvine, CA 92614
Phone (949) 809-5103, FAX (949) 809-5003

SOUTH ORANGE COUNTY WASTEWATER AUTHORITY
SULPHUR CREEK CONFLUENCE STABILIZATION

DATE 10/11/12

GENERAL PLAN

SHT NO. 1 OF 5

P:\Watr\T29884 Sulphur-Aliso Creeks Improvements\04_Conceptual Design\T29884GI001CVR.dwg 10/10/2012 15:28

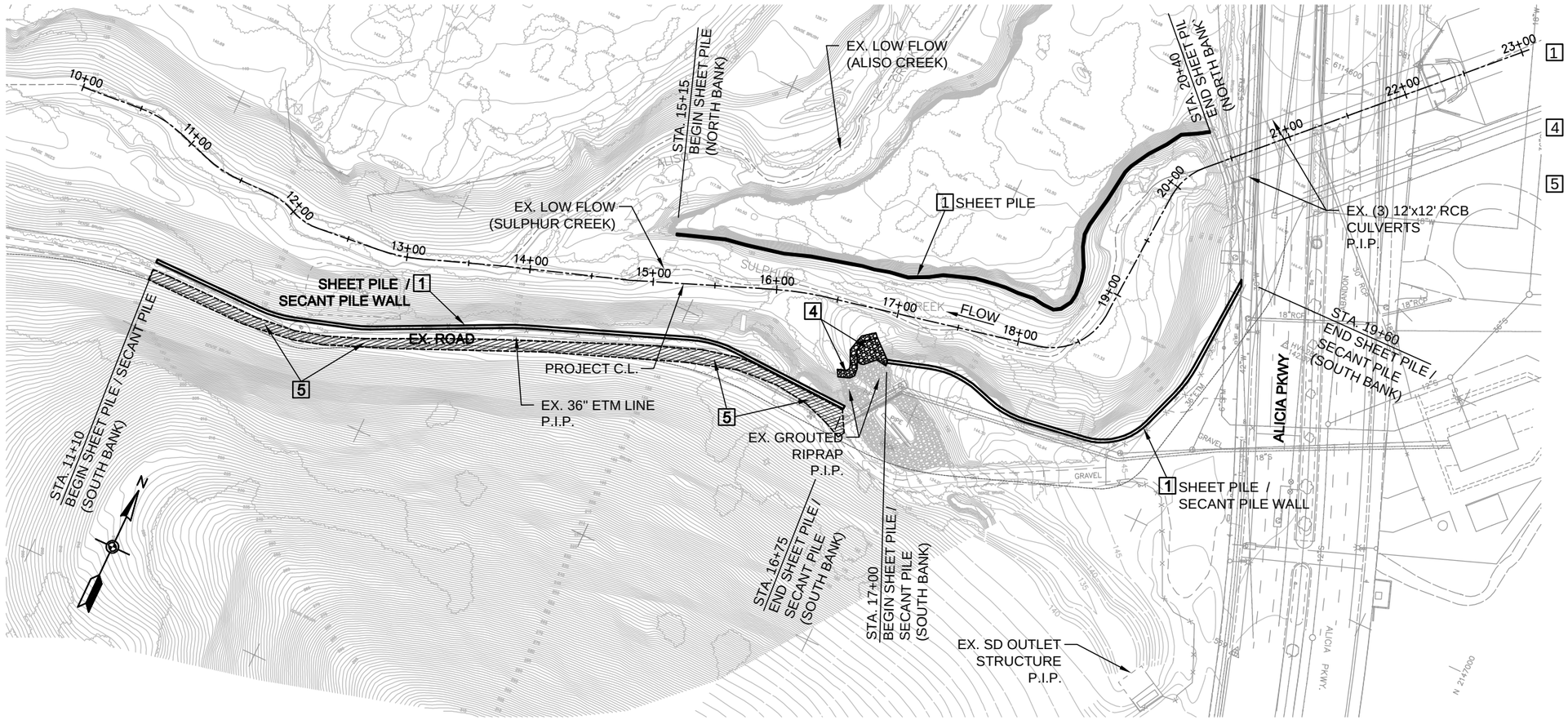

CONSTRUCTION NOTES

1. CONSTRUCT SHEET PILE/SECANT PILE WALL PER PLAN AND PROFILE HEREON AND TYPICAL SECTION ON SHT. NO.5.
4. PLACE GROUTED RIPRAP W/ TOEDOWN PER PLAN HEREON AND DETAILS ON SHT. NO.5.
5. CONSTRUCT COMPACTED FILL TO CREATE POSITIVE DRAINAGE FOR SURFACE RUNOFF TOWARDS EX. GROUTED RIPRAP PLACEMENT PER PLAN HEREON.

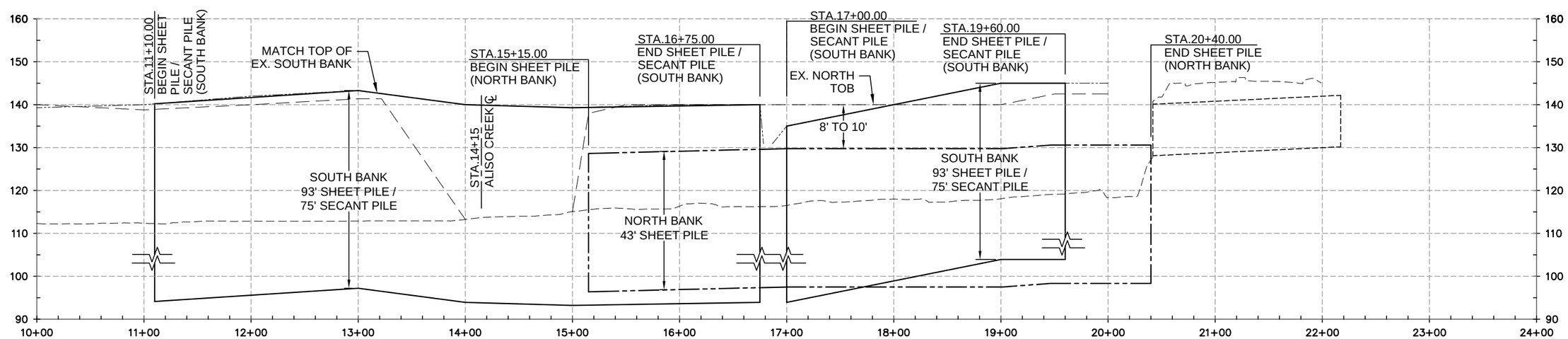

0 100 200

TETRA TECH, INC.
17885 Von Karman Avenue, Suite 500
Irvine, CA 92614
Phone (949) 809-5103, FAX (949) 809-5003

SOUTH ORANGE COUNTY WASTEWATER AUTHORITY
SULPHUR CREEK CONFLUENCE STABILIZATION

ALTERNATIVE NO. 1
SHEET PILE / SECANT PILE WALLS

DATE 10/11/12

SHT NO. 2 OF 5

P:\Watr\T29884 Sulphur-Aliso Creeks Improvements\04_Conceptual Design\T29884CF101PLN.dwg 10/10/2012 15:45

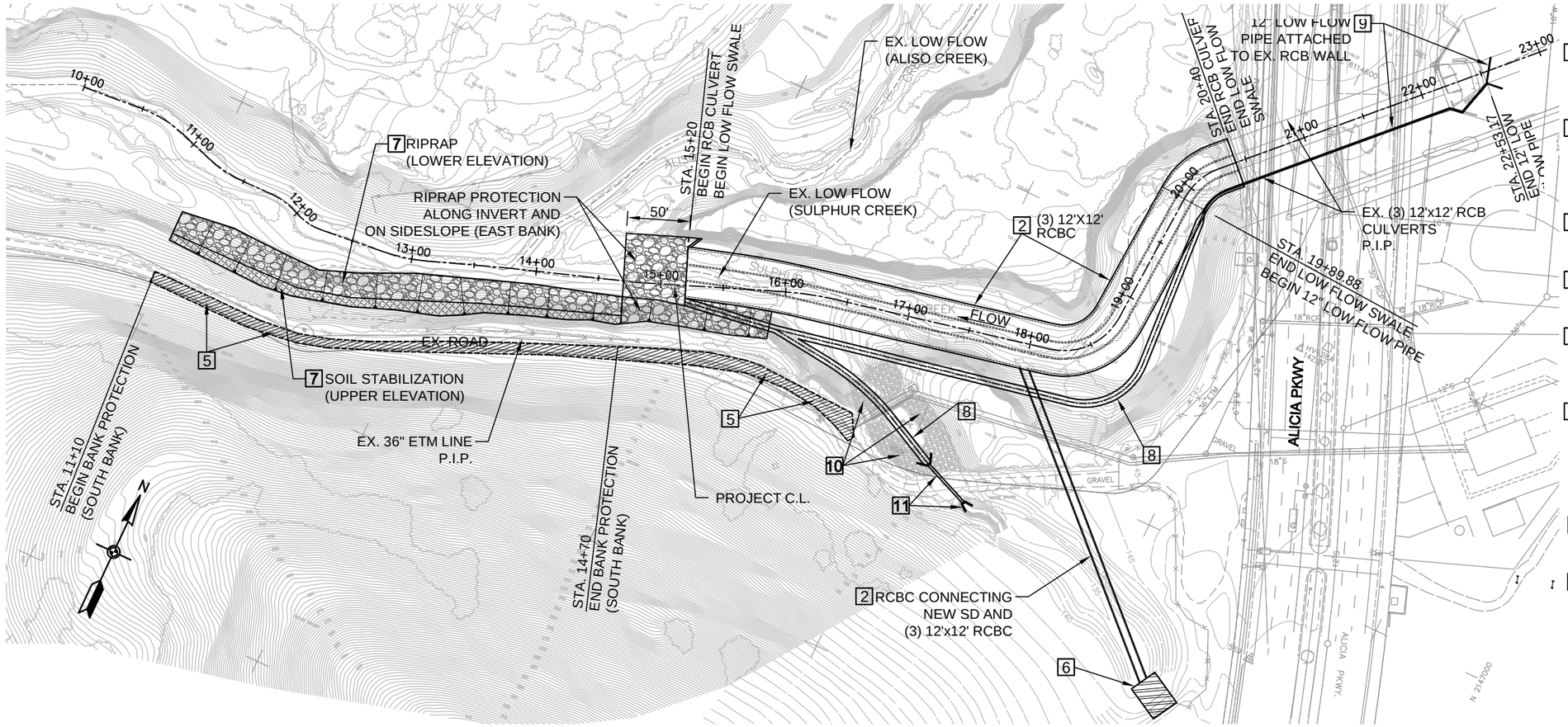

CONSTRUCTION NOTES

2 CONSTRUCT RCBC PER PLAN AND PROFILE HEREON AND TYPICAL SECTIONS ON SHT. NO.5.

5 CONSTRUCT COMPACTED FILL TO CREATE POSITIVE DRAINAGE FOR SURFACE RUNOFF TOWARDS EX. GROUTED RIPRAP PLACEMENT PER PLAN HEREON.

6 REPLACE EX. SD OUTLET STRUCTURE W/ NEW STRUCTURE PER PLAN HEREON.

7 CONSTRUCT BANK PROTECTION PER PLAN HEREON AND TYP. SECTIONS ON SHT. NO.5.

8 CONSTRUCT LOW FLOW SWALE PER PLAN AND PROFILE HEREON AND DETAILS ON SHT. NO.5.

9 CONSTRUCT 12" LOW FLOW PIPE SYSTEM, CAPTURING LOW FLOW UPSTREAM AND ROUTING IT THROUGH EX. RCBC TO NEW LOW FLOW SWAKE DOWNSTREAM PER PLAN AND PROFILE HEREON.

10 REMOVE EX. GROUTED RIPRAP AND REGRADE PER PLAN HEREON.

11 CONSTRUCT BYPASS CULVERT WITH INLET AND OUTLET STRUCTURE UNDER EX. ROADWAY PER PLAN.

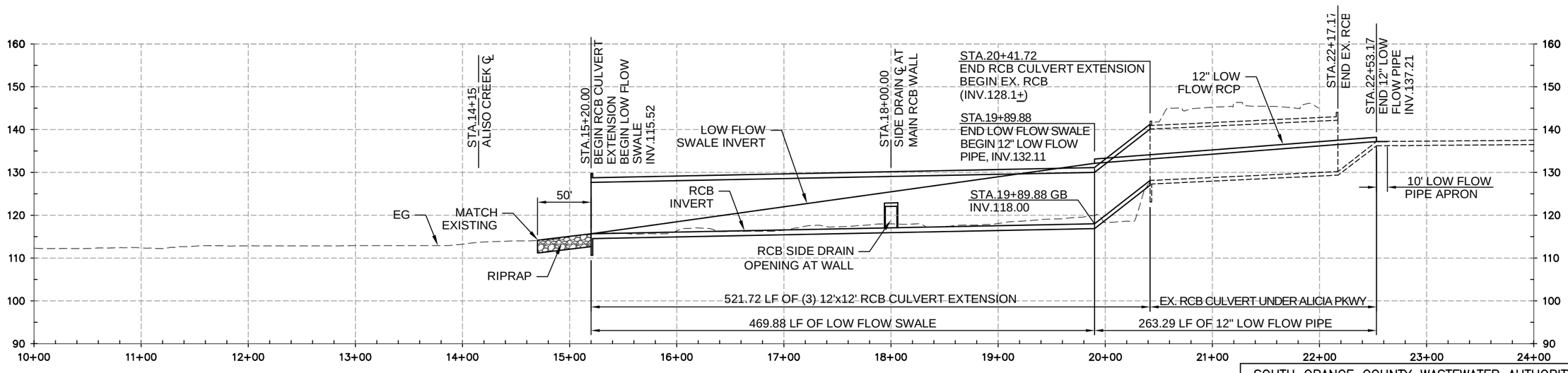

0 100 200

TETRA TECH, INC.
17885 Von Karman Avenue, Suite 500
Irvine, CA 92614
Phone (949) 809-5103, FAX (949) 809-5003

SOUTH ORANGE COUNTY WASTEWATER AUTHORITY
SULPHUR CREEK CONFLUENCE STABILIZATION

DATE 10/11/12

ALTERNATIVE NO. 2
(3) 12'x12' RCB CULVERT EXTENSION

SHT NO. 3 OF 5

P:\Watr\T29884 Sulphur-Aliso Creeks Improvements\04_Conceptual Design\T29884CF102PLN.dwg 10/10/2012 16:03

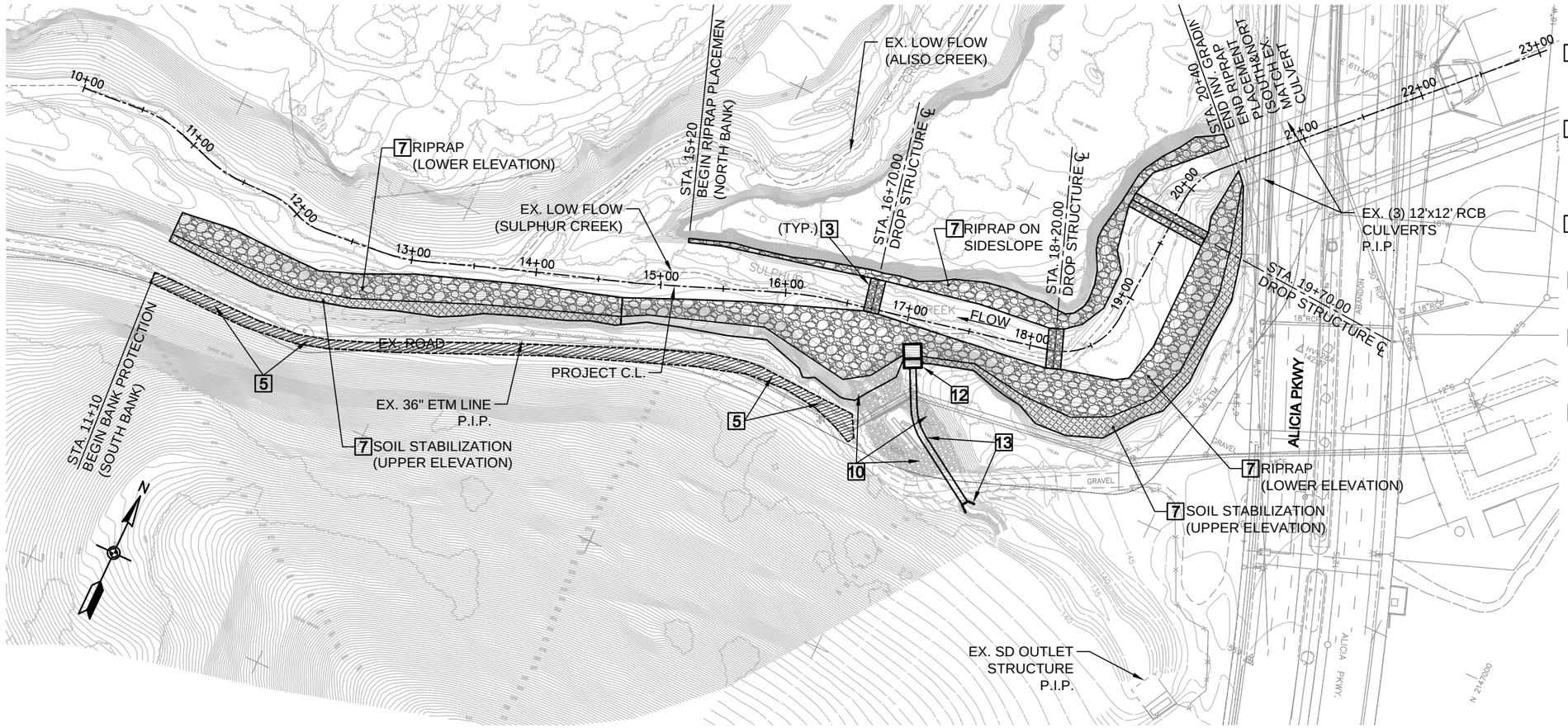

CONSTRUCTION NOTES

3 CONSTRUCT DROP STRUCTURES PER PLAN AND PROFILE AND TYPICAL SECTION ON SHT. NO.5.

5 CONSTRUCT COMPACTED FILL TO CREATE POSITIVE DRAINAGE FOR SURFACE RUNOFF TOWARDS EX. GROUTED RIPRAP PLACEMENT PER PLAN HEREON.

7 CONSTRUCT BANK PROTECTION PER PLAN HEREON AND TYP. SECTIONS ON SHT. NO.5.

10 REMOVE EX. GROUTED RIPRAP AND REGRADE PER PLAN HEREON.

12 CONSTRUCT A CONCRETE ENERGY DISSIPATOR W/ BAFFLE STRUCTURE PER PLAN HEREON.

13 CONSTRUCT CULVERT AND INLET STRUCTURE TO CAPTURE FLOW FROM EX. SD STRUCTURE PER PLAN.

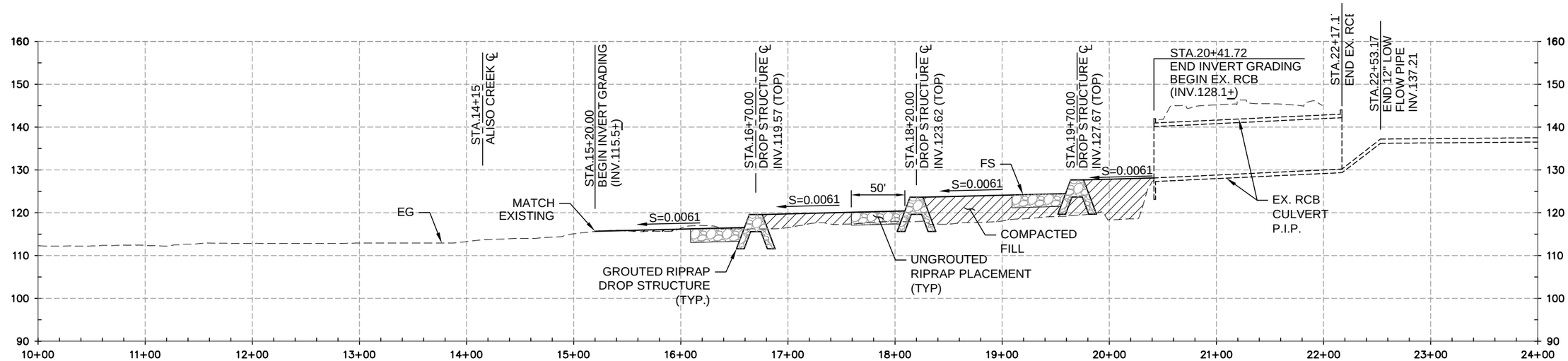

0 100 200

TETRA TECH, INC.
17885 Von Karman Avenue, Suite 500
Irvine, CA 92614
Phone (949) 809-5103, FAX (949) 809-5003

SOUTH ORANGE COUNTY WASTEWATER AUTHORITY
SULPHUR CREEK CONFLUENCE STABILIZATION

ALTERNATIVE NO. 3
DROP STRUCTURES

DATE 10/11/12

SHT NO. 4 OF 5

P:\Watr\T29884 Sulphur-Aliso Creeks Improvements\04_Conceptual Design\T29884CF103PLN.dwg 10/10/2012 16:08

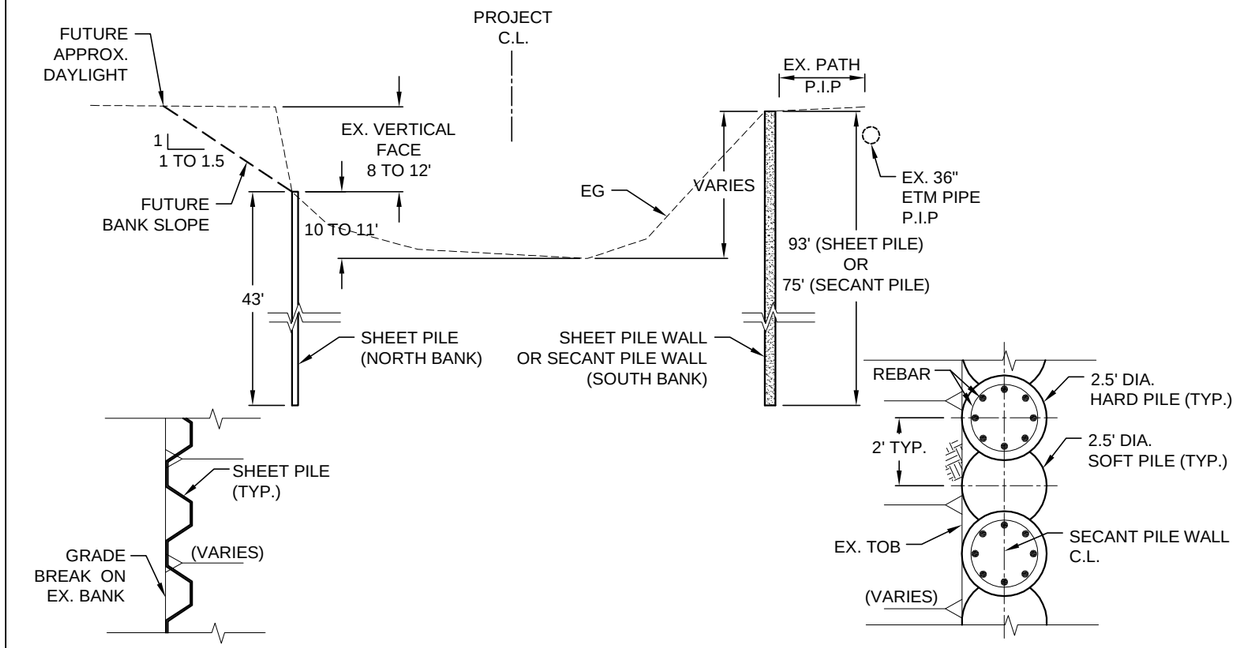

ALTERNATIVE NO.1 - SHEET PILE / SECANT PILE WALL

N.T.S

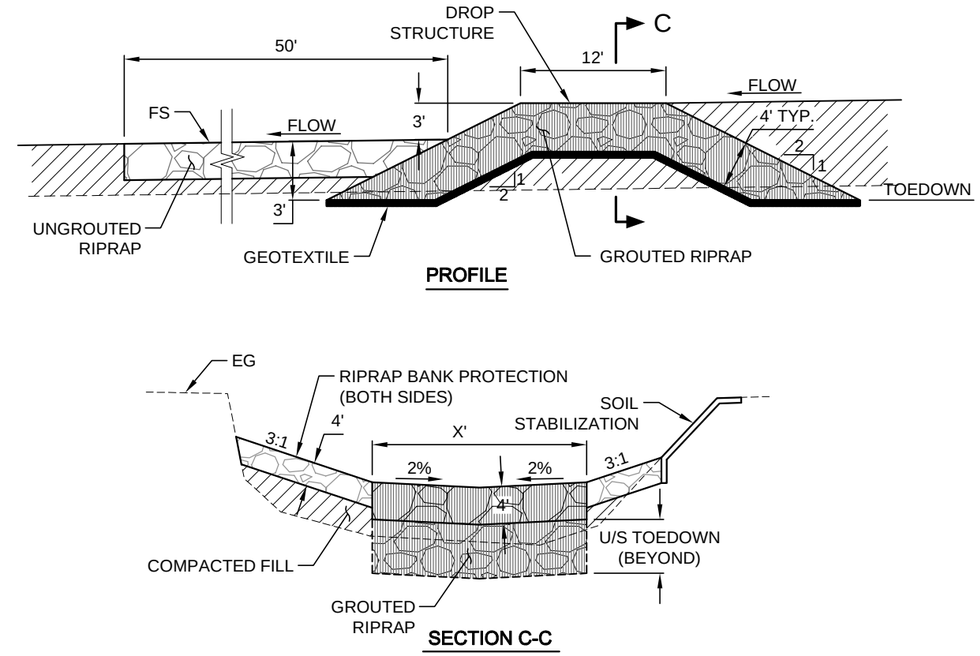

ALTERNATIVE NO.3 - DROP STRUCTURE

N.T.S

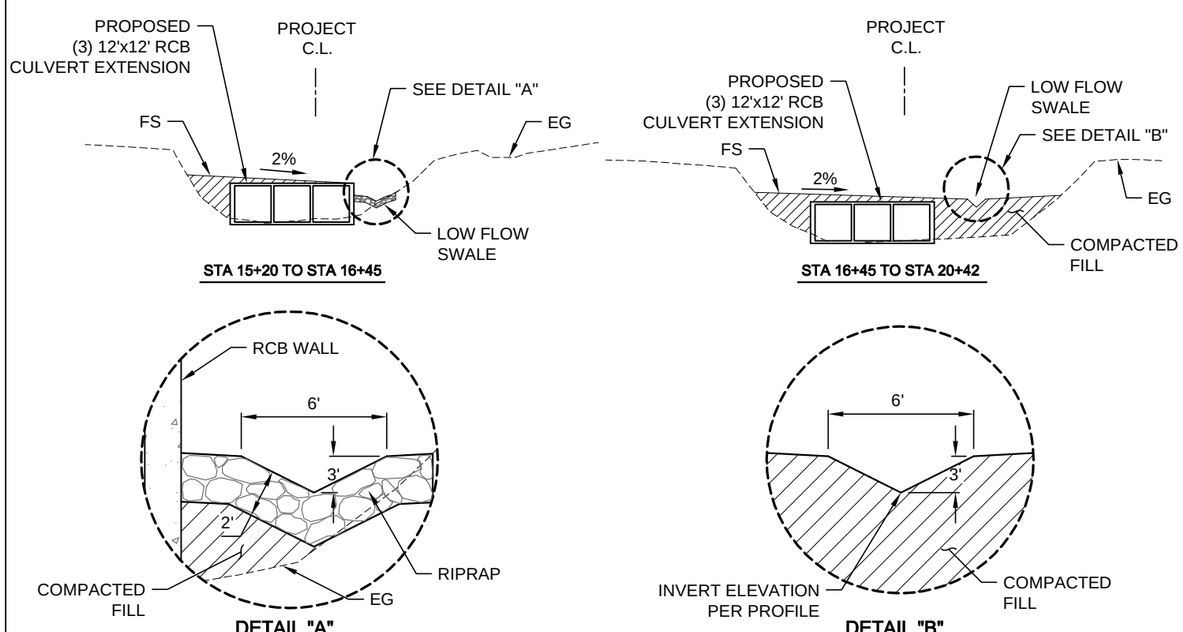

ALTERNATIVE NO.2 - RCB CULVERT

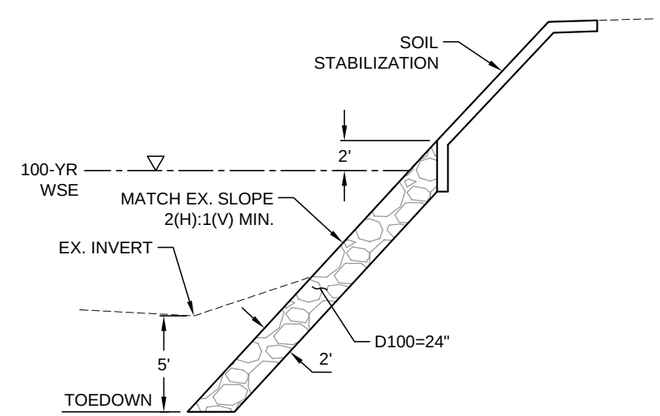

TYP. BANK PROTECTION - STA.11+10 TO 14+70

N.T.S

TETRA TECH, INC.
17885 Von Karman Avenue, Suite 500
Irvine, CA 92614
Phone (949) 809-5103, FAX (949) 809-5003

SOUTH ORANGE COUNTY WASTEWATER AUTHORITY
SULPHUR CREEK CONFLUENCE STABILIZATION

DATE 10/XX/12

TYPICAL SECTIONS

SHT NO. 5 OF 5

P:\Watr\T29884 Sulphur-Aliso Creeks Improvements\04_Conceptual Design\T29884CF501TYP.dwg 10/06/2012 21:06

This page intentionally left blank

Appendix C
CHANLPRO Output Printouts

This page intentionally left blank

Alternative 2 at RS 4.854

PROGRAM OUTPUT FOR A NATURAL CHANNEL SIDE SLOPE RIPRAP, STRAIGHT REACH

INPUT PARAMETERS

SPECIFIC WEIGHT OF STONE,PCF	165.0
LOCAL FLOW DEPTH,FT	8.8
CHANNEL SIDE SLOPE,1 VER: 1.50 HORZ	
AVERAGE CHANNEL VELOCITY,FPS	9.63
COMPUTED LOCAL DEPTH AVG VEL,FPS	9.63
(LOCAL VELOCITY)/(AVG CHANNEL VEL)	1.00
SIDE SLOPE CORRECTION FACTOR K1	.71
CORRECTION FOR VELOCITY PROFILE IN BEND	1.00
RIPRAP DESIGN SAFETY FACTOR	1.75

SELECTED STABLE GRADATIONS

ETL GRADATION

NAME	COMPUTED D30(MIN)	D100(MAX)	D85/D15	N=THICKNESS/	CT	
THICKNESS						
	D30 FT	FT	IN	D100(MAX)		IN
4		.73	18.00	1.70	NOT STABLE	
5	.85	.85	21.00	1.70	1.44	.90	30.3
6	.94	.97	24.00	1.70	1.00	1.00	24.0

D100(MAX)	LIMITS OF STONE WEIGHT,LB						D30(MIN)	D90(MIN)
IN	FOR PERCENT LIGHTER BY WEIGHT						FT	FT
	100		50		15			
21.00	463	185	137	93	69	29	.85	1.23
24.00	691	276	205	138	102	43	.97	1.40

EQUIVALENT SPHERICAL DIAMETERS IN INCHES

D100(MAX)	D100(MIN)	D50(MAX)	D50(MIN)	D15(MAX)	D15(MIN)
21.0	15.5	14.0	12.3	11.1	8.3
24.0	17.7	16.0	14.0	12.7	9.5

Alternative 3(a) at RS 16+64.00

PROGRAM OUTPUT FOR A NATURAL CHANNEL SIDE SLOPE RIPRAP, STRAIGHT REACH

INPUT PARAMETERS

SPECIFIC WEIGHT OF STONE,PCF	165.0
LOCAL FLOW DEPTH,FT	6.1
CHANNEL SIDE SLOPE,1 VER: 3.00 HORZ	
AVERAGE CHANNEL VELOCITY,FPS	11.99
COMPUTED LOCAL DEPTH AVG VEL,FPS	11.99
(LOCAL VELOCITY)/(AVG CHANNEL VEL)	1.00
SIDE SLOPE CORRECTION FACTOR K1	.99
CORRECTION FOR VELOCITY PROFILE IN BEND	1.00
RIPRAP DESIGN SAFETY FACTOR	1.30

SELECTED STABLE GRADATIONS

ETL GRADATION

NAME	COMPUTED D30(MIN)	D100(MAX)	D85/D15	N=THICKNESS/	CT	
THICKNESS						
	D30 FT	FT	IN	D100(MAX)		IN
4		.73	18.00	1.70	NOT STABLE	
5	.85	.85	21.00	1.70	1.14	.96	24.0
6	.88	.97	24.00	1.70	1.00	1.00	24.0

D100(MAX) IN	LIMITS OF STONE WEIGHT,LB FOR PERCENT LIGHTER BY WEIGHT						D30(MIN) FT	D90(MIN) FT
	100		50		15			
21.00	463	185	137	93	69	29	.85	1.23
24.00	691	276	205	138	102	43	.97	1.40

EQUIVALENT SPHERICAL DIAMETERS IN INCHES

D100(MAX)	D100(MIN)	D50(MAX)	D50(MIN)	D15(MAX)	D15(MIN)
21.0	15.5	14.0	12.3	11.1	8.3
24.0	17.7	16.0	14.0	12.7	9.5

Alternative 3(b) at RS 19+64.00

PROGRAM OUTPUT FOR A NATURAL CHANNEL SIDE SLOPE RIPRAP, STRAIGHT REACH

INPUT PARAMETERS

SPECIFIC WEIGHT OF STONE,PCF	165.0
LOCAL FLOW DEPTH,FT	4.3
CHANNEL SIDE SLOPE,1 VER: 3.00 HORZ	
AVERAGE CHANNEL VELOCITY,FPS	10.57
COMPUTED LOCAL DEPTH AVG VEL,FPS	10.57
(LOCAL VELOCITY)/(AVG CHANNEL VEL)	1.00
SIDE SLOPE CORRECTION FACTOR K1	.99
CORRECTION FOR VELOCITY PROFILE IN BEND	1.00
RIPRAP DESIGN SAFETY FACTOR	1.30

SELECTED STABLE GRADATIONS

ETL GRADATION

NAME	COMPUTED D30(MIN)	D100(MAX)	D85/D15	N=THICKNESS/	CT	
THICKNESS						
	D30 FT	FT	IN	D100(MAX)		IN
2		.48	12.00	1.70	NOT STABLE	
3	.61	.61	15.00	1.70	1.68	.87	25.2
4	.70	.73	18.00	1.70	1.00	1.00	18.0

D100(MAX)	LIMITS OF STONE WEIGHT,LB						D30(MIN)	D90(MIN)
IN	FOR PERCENT LIGHTER BY WEIGHT						FT	FT
	100		50		15			
15.00	169	67	50	34	25	11	.61	.88
18.00	292	117	86	58	43	18	.73	1.06

EQUIVALENT SPHERICAL DIAMETERS IN INCHES

D100(MAX)	D100(MIN)	D50(MAX)	D50(MIN)	D15(MAX)	D15(MIN)
15.0	11.1	10.0	8.8	7.9	6.0
18.0	13.3	12.0	10.5	9.5	7.1

This page intentionally left blank

Appendix D
Cost Estimates

This page intentionally left blank

COST ESTIMATE

Project ID: **T 29884**
Project Title: Sulphur Creek Improvement
Date: **10/10/12**

Alternative	1A Sheet Pile	1B Sht / Secant	2 RCB Ext.	3 Drop Str
Grand Total:	$9,872,700	$9,343,800	$4,479,000	$1,317,000

Table 5.1 A – Cost Estimate for Alternative 1 (Sheet Pile Walls)

	Contract Items	Unit	Quantity	Unit Cost	Total Cost	
1	Mobilization	LS	1	$ 250,000	$250,000	5% of total construction costs
2	Clearing and Grubbing	Acre	0.25	$ 7,500	$1,875	
3	Sheet Pile Walls					
3.1	Sheet Piles (North Bank)	SF	22,575	$ 70	$1,580,250	unmanned pile driver: 1.5*$45/SF in SAR Phase 3
3.2	Sheet Piles (South Bank)	SF	76,725	$ 45	$3,452,625	$45/SF in SAR Phase 4
4	Surface Runoff Damage Remediation	CY	407	$ 35	$14,245	5500 SF & average depth of 2' of compacted fill
5	Grouted Riprap Placement with Toedown	CY	54	$ 165	$8,898	650 SF (including toedown); 2 ft thick
				Subtotal:	$5,307,893	
		Planning, Engineering, and Design (@ 12%)			$636,947	
		Construction Management (@ 12%)			$636,947	
				Subtotal:	$6,581,787	
		Contingencies		(@ 50%)	$3,290,894	
				Subtotal:	$9,872,681	
				Grand Total:	$9,872,700	

Table 5.1 B – Cost Estimate for Alternative 1 (Sheet Pile / Secant Pile Walls)

	Contract Items	Unit	Quantity	Unit Cost	Total Cost	
1	Mobilization	LS	1	$ 240,000	$240,000	5% of total construction costs
2	Clearing and Grubbing	Acre	0.32	$ 7,500	$2,400	
3	Sheet Pile / Secant Pile Walls					
3.1	Sheet Piles (North Bank)	SF	22,575	$ 70	$1,580,250	unmanned pile driver: 1.5*$45/SF in SAR Phase 3
3.2	Secant Piles (South Bank)	LS	1	$ 3,177,750	$3,177,750	Wilbert's LMC Phase 1B quote & calculation
4	Surface Runoff Damage Remediation	CY	407	$ 35	$14,245	5500 SF & average depth of 2' of compacted fill
5	Grouted Riprap Placement with Toedown	CY	54	$ 165	$8,898	650 SF (including toedown); 2 ft thick
				Subtotal:	$5,023,543	
		Planning, Engineering, and Design (@ 12%)			$602,825	
		Construction Management (@ 12%)			$602,825	
				Subtotal:	$6,229,193	
		Contingencies		(@ 50%)	$3,114,597	
				Subtotal:	$9,343,790	
				Grand Total:	$9,343,800	

Table 5.2 – Cost Estimate for Alternative 2 (RCB Culvert Extension w/ Low Flow Swale)

	Contract Items	Unit	Quantity	Unit Cost	Total Cost	
1	Mobilization	LS	1	$ 110,000	$110,000	5% of total construction costs
2	Clearing and Grubbing	Acre	1.36	$ 7,500	$10,200	
3.1	RCB Culvert Extension					
3.1.1	RCB Culvert Extension	LF	520	$ 3,500	$1,820,000	Sta.15+20 to 20+40; $750/CY of concrete; vol based on as-built
3.1.2	Riprap Protection (at Downstream End)	CY	385	$ 85	$32,741	
3.1.3	Excavation	CY	2,296	$ 15	$34,440	
3.1.4	Compacted Fill	CY	7,612	$ 30	$228,360	
3.2	Low Flow Swale					
3.2.1	Low Flow Swale (Fine Grading)	SY	4,110	$ 1.50	$6,165	685 LF & 6' wide
3.2.2	Low Flow Capturing System	LS	1	$ 2,000	$2,000	
3.2.3	12" Bypass Pipe	LF	264	$ 155	$40,920	12" steel pipe
3.3	Bank Protection (South Bank D/S of Confluence)					
3.3.1	Riprap (Lower Elevation)	CY	597	$ 85	$50,745	
3.3.2	Soil Stabilization (Upper Elevation)	SY	362	$ 30	$10,860	
3.4	Storm Drain Improvement					
3.4.1	Storm Drain Outlet Structure Replacement	LS	1	$ 10,000	$10,000	
3.4.2	Connecting Culvert	LF	260	$ 115	$29,900	36" RCP, Class 3
3.4.3	Bypass Culvert under Dip Crossing w/ Headwalls	LS	1	$ 7,500	$7,500	40'long, 24" RCP, Class 3
4	Surface Runoff Damage Remediation	CY	407	$ 35	$14,245	5500 SF & average depth of 2' of compacted fill
					Subtotal:	$2,408,076
		Planning, Engineering, and Design (@ 12%)				$288,969
		Construction Management (@ 12%)				$288,969
					Subtotal:	$2,986,014
		Contingencies		(@ 50%)		$1,493,007
					Subtotal:	$4,479,021
					Grand Total:	$4,479,000

Table 5.3 – Cost Estimate for Alternative 3 (Drop Structures)

	Contract Items	Unit	Quantity	Unit Cost	Total Cost	
1	Mobilization	LS	1	$ 30,000	$30,000	5% of total construction costs
2	Clearing and Grubbing	Acre	1.46	$ 7,500	$10,950	
3.1	Drop Structures					
3.1.1	Drop Structures	CY	807	$ 165	$133,222	
3.1.2	Ungrouted Riprap Protection (D/S)	CY	694	$ 85	$59,028	50' long, wideth varies, d/s of each drop structures
3.1.3	Excavation	CY	575	$ 15	$8,625	
3.1.4	Compacted Fill	CY	4,381	$ 30	$131,430	
3.2	Bank Protection (North Bank)					
3.2.1	Riprap	CY	637	$ 85	$54,145	
3.3	Bank Protection (South Bank)					
3.3.1	Riprap (Lower Elevation)	CY	2,253	$ 85	$191,505	
3.3.2	Soil Stabilization (Upper Elevation)	SY	1,170	$ 30	$35,100	
3.4	SD System to Capture Flow from Ex. SD					
3.4.1	Culvert	LF	120	$ 115	$13,800	120' long , 24" RCP
3.4.2	Inlet Structure	LS	1	$ 6,000	$6,000	
3.4.3	Energy Dissipator w/ Baffle Structure	LS	1	$ 20,000	$20,000	
4	Surface Runoff Damage Remediation	CY	407	$ 35	$14,245	5500 SF & average depth of 2' of compacted fill
				Subtotal:	$708,050	
		Planning, Engineering, and Design (@ 12%)			$84,966	
		Construction Management (@ 12%)			$84,966	
				Subtotal:	$877,982	
		Contingencies	(@ 50%)		$438,991	
				Subtotal:	$1,316,973	
				Grand Total:	$1,317,000	

Quantity & Cost Estimates - Sheet Pile & Secant Pile Walls (Alternative 1)

last updated: **10/3/2012**

Table 3.1 - Sheet Pile / Secant Pile Walls

Location	Station	Exposed Face Height [ft]	Embedment Depth [ft]	Total Height [ft]	Average Total Height [ft]
North Bank (Sheet Pile)	15+50	10.0	30.0	40.0	**43**
	17+50	11.0	33.0	44.0	
	19+00	11.0	33.0	44.0	
South Bank (Sheet Pile)	15+50	20.9	62.7	83.6	**93**
	17+50	21.5	64.5	86.0	
	19+00	27.0	81.0	108.0	
South Bank (Secant Pile)	15+50	20.9	47.0	67.9	**75**
	17+50	21.5	48.4	69.9	
	19+00	27.0	60.8	87.8	

			Sheet Pile (Both Banks)		***Sheet Pile & Secant Pile***								
			Sheet Pile		Sheet Pile		Secant Pile			**Unit Cost/[LF]**		**Total Cost**	
Location	Station	Distance	Avg Tot Ht [LF]	Area [SF]	Avg Tot Ht [LF]	Area [SF]	Avg Tot Ht [LF]	Hard Piles [Ea]	Soft Piles [EA]	**Hard Piles**	**Soft Piles**	**Hard Piles**	**Soft Piles**
North Bank	15+15												
	20+40	525.0	**43**	22575	**43**	22575							
Subtotal (North Bank):				22575		22575							
South Bank (Downstream)	11+10												
	16+75	565.0	**93**	52545			**75**	142	141	$ 140	$ 65	$1,491,000	$ 687,375
South Bank (Upstream)	17+00												
	19+60	260.0	**93**	24180			**75**	65	65	$ 140	$ 65	$ 682,500	$ 316,875
Subtotal (South Bank):				76725				207	206			Subtotal: $2,173,500	$ 1,004,250
												Total:	**$ 3,177,750**

TETRA TECH, INC.

CLIENT _____ JOB NO. _____ PAGE _____

PROJECT _____ COMPUTED BY _____ DATE _____

DETAIL _____ CHECKED BY _____ DATE _____

ALT 1 - Sheet Pile / Secant Pile Walls

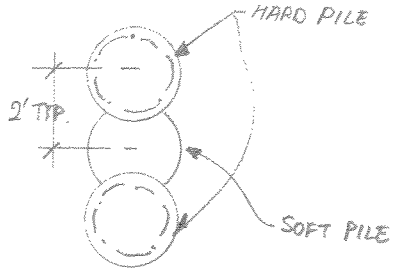

565' + 260' = 825' Length of Wall

825/2 = 413 piles → 207 HARD PILES
&
206 SOFT PILES

HARD PILE : 207 piles × (75'H) × $ 140/LF = $ 2,173,500

SOFT PILE : 206 piles × (75'H) × $ 65/LF = $ 1,004,250

$ 3,177,750

TETRA TECH, INC.

CLIENT _____ JOB NO. _____ PAGE _____

PROJECT _____ COMPUTED BY _____ DATE _____

DETAIL _____ CHECKED BY _____ DATE _____

ALT 2 – RCB Culvert Extension

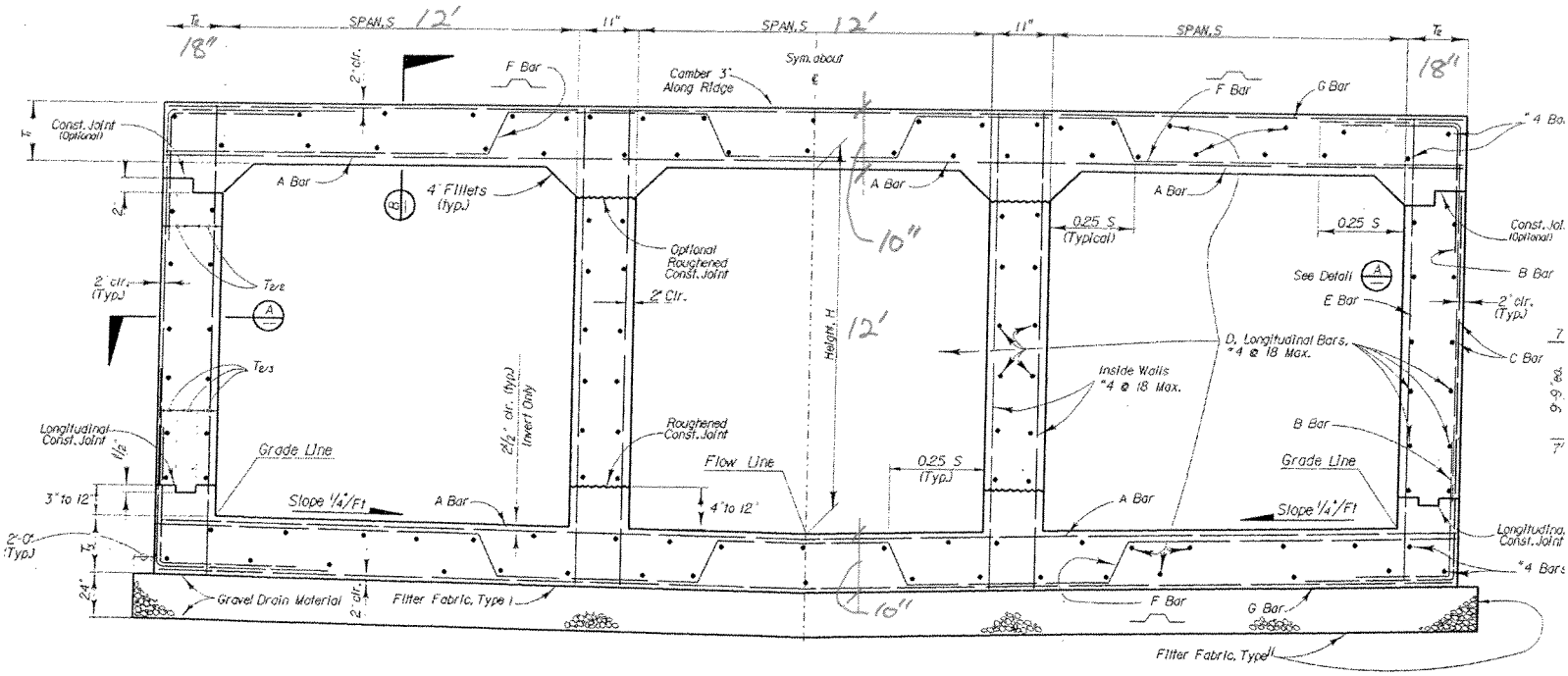

CALTRANS MODIFIED STD. PLAN D81 & D83

TYPICAL R.C. BOX SECTION

NOT TO SCALE

Ex. (3) 12'x12' RCB section based on As-built plans (Aug, 1991)

CROSS-SECTIONAL AREA $= (18'' + 12' + 11'' + 12' + 11'' + 12' + 18'') \times 10'' \times 2$

$+ (18'' \times 12') \times 2 + (11'' \times 12') \times 2$

$= 68.06\ SF + 36\ SF + 22\ SF$

$= \underline{126.06\ SF}$

Vol Concrete $= 126.06\ SF \times 520\ LF = 65{,}551\ CF$

$= 2{,}428\ CY$

$\$750/CY * 2{,}428 = \$1{,}821{,}000$

↳ OR $\underline{\$3{,}500/LF}$

PROJECT: **Sulphur Creek Confluence Stabilization** T29884
DETAIL: *Alternative 2 Earthwork Quantities* 10/4/2012
COMPUTED BY: BS
CHECKED BY:

Station	Distance	Cross Sectional Area (SF) Excavation	Cross Sectional Area (SF) Backfill	Cross Sectional Area (CF) Excavation	Cross Sectional Area (CF) Backfill
1520		0.00	0.00		
1550	30	289.17	329.90	4337.55	4948.50
1600	50	104.60	131.20	9844.25	11527.50
1700	100	158.71	251.19	13165.50	19119.50
1800	100	146.30	401.89	15250.50	32654.00
1900	100	78.17	640.34	11223.50	52111.50
2041	141	37.57	567.47	8159.67	85150.61
				61980.97	205511.61 [CF]
				2,295.59	**7,611.54** [CY]

TETRA TECH, INC.

Sheet No. ____ of ____ Date: ____
Checked By: ____ Office: ____
Telephone: ____
Engineer: ____ Job No.: ____
Subject: ____

ALT 2 (Bypass Culvert w/ Headwalls)

40' Long × 24"D RCP, CLASS 3 ($60/LF) = $2,400

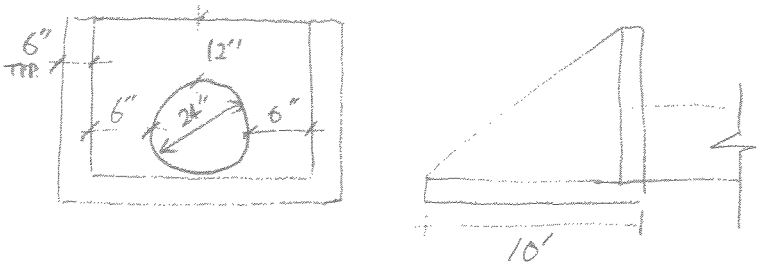

$$\underbrace{(3' \times 3' \times 6'')}_{\text{HEADWALL}} + \underbrace{(10' \times 3' \times 6'' \times \tfrac{1}{2}) \times 2}_{\text{WINGWALLS}} + (4' \times 10' \times 6'')$$

= 39.5 CF ≈ 1.46 CY

× $800/CY

≅ $1,200/EA

∴ $2,400 + $1,200 × 2 = $ 4,800 + 50%

CONTINGENCY FOR LARGER PIPE

≈ $7,500

TETRA TECH, INC.

CLIENT _____ JOB NO. _____ PAGE _____

PROJECT _____ COMPUTED BY _____ DATE _____

DETAIL _____ CHECKED BY _____ DATE _____

ALT3 - Drop Structures

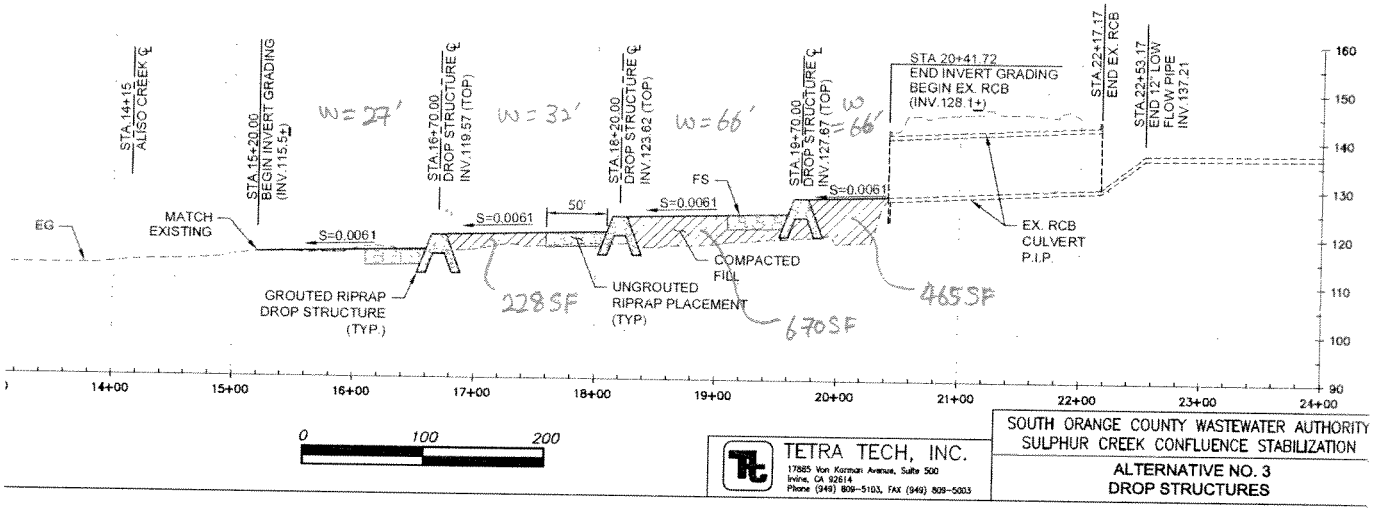

Fill (along channel bottom only)

15+20 → 16+70 : 0 CY

16+70 → 18+20 : 228 SF × 32'/27 = 270 CY

18+20 → 19+70 : 670 × 66 / 27 = 1638 CY

19+70 → 20+41.72 : 465 × 66 / 27 = 1137 CY

3,045 CY

+

Fill (under Riprap sideslopes only)

from a separate spreadsheet: 1,336 CY

4,381 CY

TETRA TECH, INC.

CLIENT _____ JOB NO. _____ PAGE _____

PROJECT _____ COMPUTED BY _____ DATE _____

DETAIL _____ CHECKED BY _____ DATE _____

ALT 3 – Drop Structures (Continued.)

CUT (along channel bottom only)

50' × 27' × 3' / 27 = 150 CY
(ungrouted riprap placement)

CUT (under Riprap sideslopes only)

- including excavation necessary to install 24" thick riprap
- from a separate spreadsheet 425 CY

575 CY

PROJECT: **Sulphur Creek Confluence Stabilization** T29884
DETAIL: *Alternative 3 Earthwork Quantities* 10/4/2012
COMPUTED BY: BS / JS
CHECKED BY:

Earthwork Quantities along sideslopes only
(includes excavation to install 24" thick riprap)

Station	Distance	Cross Sectional Area * (SF) Excavation	Fill	Cross Sectional Area (CF) Excavation	Backfill
1520		0.00	0.00		
1600	80	91.00	0.00	3640.00	0.00
1650	50	37.80	190.00	3220.00	4750.00
1700	50	15.00	28.00	1320.00	5450.00
1800	100	25.50	16.00	2025.00	2200.00
1900	100	0.00	146.50	1275.00	8125.00
2041.72	141.72	0.00	73.00	0.00	15553.77
				11480.00	36078.77 [CF]
				425.19	**1,336.25** [CY]

*

Quantity & Cost Estimates - Drop Structures (Alternative 3)

last updated: **10/3/2012**

			Grouted Riprap Structure			Ungrouted RR Protection (D/S)			
No.	Station	Length [ft]	Xsec Area [SF]	Volume [SF]	Volume [CF]	Thickness [ft]	Distance [ft]	Volume [SF]	Volume [CF]
1	16+70	27	174.4	4708.8	174.4	3.0	50.0	4050.0	150.0
2	18+20	32	174.4	5580.8	206.7	3.0	50.0	4800.0	177.8
3	19+70	66	174.4	11510.4	426.3	3.0	50.0	9900.0	366.7

Total: **807.4** [CF] **694.4** [CF]

TETRA TECH, INC.

Sheet No. ____ of ____ Date: ____
Checked By: ____ Office: ____
Telephone: ____
Engineer: ____ Job No.: ____
Subject: ____

ALT 3 (Inlet Structure for SD System)

Headwall Structure

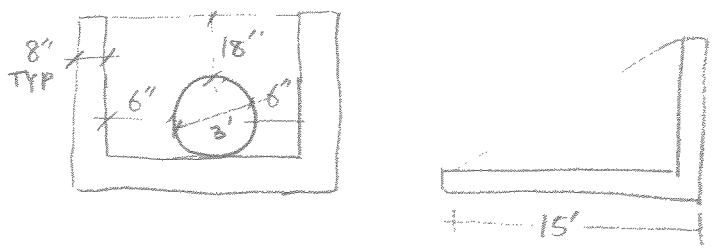

$$8'' \times [(6'' \times 2 + 3') \times (3' + 18'')] + (8'' + 6'' + 3' + 6'' + 8'') \times 15' \times 8''$$
$$+ (15' \times (3' + 18'') \times \tfrac{1}{2} \times 2$$

$$= 12 + 53 + 67.5 = 132.5\ CF \approx \underline{5.\ CY} \times \$800/CY$$

$$\cong \$4000$$

$\therefore$ \$4,000 + 50%
CONTINGENCY FOR A LARGER PIPE

$= \$6,000$

This page intentionally left blank

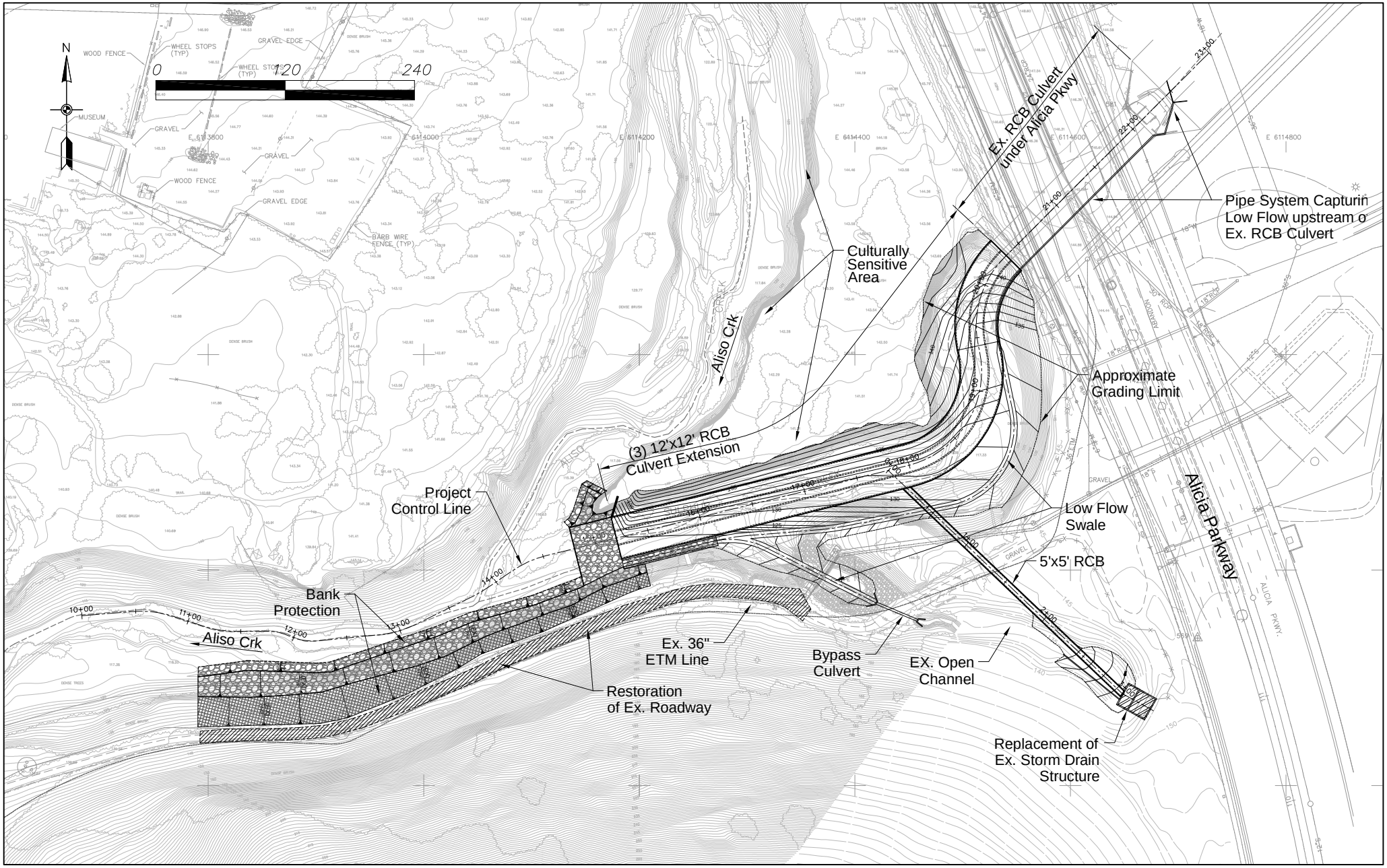
N
0
120
240
Ex. RCB Culvert under Alicia Pkwy
Pipe System Capturin Low Flow upstream o Ex. RCB Culvert
Culturally Sensitive Area
Aliso Crk
Approximate Grading Limit
(3) 12'x12' RCB Culvert Extension
Project Control Line
Low Flow Swale
5'x5' RCB
Alicia Parkway
Bank Protection
Aliso Crk
Ex. 36" ETM Line
Bypass Culvert
EX. Open Channel
Restoration of Ex. Roadway
Replacement of Ex. Storm Drain Structure

South Orange County Wastewater Authority

Stabilization of Confluence of Sulphur Creek and Aliso Creek

Orange County, California

35% Level Design Report

January 2013

TETRA TECH
17885 Von Karman Ave, Suite 500
Irvine, California 92614

This page intentionally left blank

Stabilization of Confluence of Sulphur Creek and Aliso Creek

Orange County, California

35% Level Design Report

January2013

Prepared for:

South Orange County Wastewater Authority

Prepared by:

Tetra Tech
17885 Von Karman Ave, Suite 500
Irvine, California 92614
(949) 809-5000

This page intentionally left blank

EXECUTIVE SUMMARY

The Aliso Creek watershed, which includes Aliso Creek (main stream) and several tributaries (including Sulphur Creek), is located in Orange County on the coast of Southern California. Aliso Creek drains a long, narrow coastal watershed from the Cleveland National Forest to the Pacific Ocean. This study focuses on a lower portion of Sulphur Creek, near its confluence with Aliso Creek in the vicinity of Aliso Creek Road and Alicia Parkway within the City of Laguna Niguel. The limit of the project extends from approximately 350 feet downstream of the confluence (downstream limit) to just upstream of the Alicia Parkway culvert crossing on Sulphur Creek (upstream limit).

The study reach downstream of the Alicia Parkway culvert is a natural channel with channel banks that are very high and steep (both south and north banks) or near vertical (north bank), caused by channel erosion and invert degradation. Visual assessments revealed that steep existing banks appeared to lack stability, and that these banks are likely to be subjected to slope failure if no remediation or improvement is provided along the study reach. In order to protect the existing banks and overbank facilities, including roadway, underground utilities, and culturally sensitive areas, against potential future erosion and bank failure, a 35% level design was prepared, based on the selected conceptual alternative (Alternative 2) from the Conceptual Design report, prepared by Tetra Tech, Inc. and submitted to South Orange County Wastewater Authority (SOCWA) in October of 2012. In that report, three different conceptual alternatives were evaluated.

A hydraulic analysis was performed by developing a 35% level design-conditions hydraulic model, utilizing an existing HEC-RAS model acquired from the previous geomorphology study. The hydraulic analysis output provided hydraulic design parameters necessary to size the design elements of the 35% level design plans.

Along Sulphur Creek the 35% level design includes an extension of the existing RCB culvert under Alicia Parkway down to the confluence with Aliso Creek. The culvert extension includes the continuation of a (3) 12’Wx12’H RCB culvert at the upstream end which transitions to a (3) 9’Wx12’H RCB culvert at the downstream end. The 35% level design also includes an extension of the J03P02 storm drain lateral to the confluence with Aliso Creek. The storm drain lateral extension includes demolishing the existing outlet structure and grouted rock channel, constructing a manhole-like structure to connect the existing 72” RCP with a 8’Wx5’H RCB culvert which then transitions to a 9’Wx12’H RCB culvert at the downstream end. All RCBs include a series of concrete ripples, strategically placed at the invert and sides of each RCB cell to force hydraulic jumps within the culverts. The culverts would then be covered with fill and low-flow swales would be constructed on the finished grades to carry non-storm flows. The project is assumed to be self-mitigating by revegetating the disturbed construction area at a 1:1 ratio. The low-flow swales would provide water quality treatment and nourishment to the revegetated habitat. The 35% level design also includes bank protection, which consists of riprap (lower elevation) and Geoweb-type soil stabilization measure (upper elevation), would be placed downstream of the RCB culvert along the south bank of Aliso Creek. The bank protection would have a toedown depth of 12 feet based on the scour analysis presented herein. Additionally, the roadway would be stabilized and restored to provide maintenance and recreational access.

After the project is completed in place, a project specific Operation and Maintenance (O&M) plan should be developed and adopted. The plan should include an adaptive management plan to cover both monitoring and inspection programs of the project site. The O&M plan should cover repair and restoration recommendations to restore any damage caused by storm flows or changed conditions to the design conditions or improve them as necessary. The monitoring and inspection program should take place both periodically and after any significant storm event (2-yr or greater). The critical areas that should be subjected to thorough monitoring and inspection efforts are identified as follows: re-created habitat over finished grades, erosion by surface runoff, and existing bank along Aliso Creek upstream of the Sulphur Creek confluence.

The cost of construction for the 35% level design is estimated to be $ 5,338,000.

The 35% level design is based on the available information at the time in accordance with the Scope of Work for this project. For future construction level design, various considerations and recommendations are identified to improve the design quality and details. The considerations include surveying to obtain current topographic data, subsurface investigation and geotechnical analyses, updated hydraulic model, updated scour analysis downstream of the confluence, and environmental and biological assessments.

TABLE OF CONTENTS

TABLE OF CONTENTS I

LIST OF APPENDICES II

1. INTRODUCTION 1

1.1 PURPOSE AND SCOPE OF WORK 1
1.2 EXISTING CONDITIONS 4
1.3 SURVEY MAPPING 5

2. HYDRAULIC ASSESSMENTS 7

2.1 HYDROLOGY 7
2.2 PREVIOUS HYDRAULIC MODELS 7
2.3 DEVELOPMENT OF HYDRAULIC MODELS 7
2.3.1 Existing-Conditions Model 7
2.3.2 Proposed-Conditions Model 8
2.3.3 Limitation of HEC-RAS Model 9
2.3.4 Hydraulic Results 10
2.3.5 Curved Channel Cross-Waves, Superelevation, and Transition Length 11
2.4 FUTURE IMPROVEMENTS TO HYDRAULIC MODEL 13

3. DEVELOPMENT OF 35% LEVEL DESIGN 15

3.1 FORMULATION OF CONCEPTUAL DESIGN ALTERNATIVES 16
3.2 RCB CULVERT EXTENSION ALONG SULPHUR CREEK 17
3.2.1 RCB Culvert with a Low-Flow Swale 17
3.2.2 Cutoff Wall 19
3.2.3 RCB Ripples 19
3.3 EXISTING STORM DRAIN (J03P02) IMPROVEMENT 19
3.4 BANK PROTECTION 20
3.4.1 General 20
3.4.2 Aliso Creek Bed Scour Analysis 21
3.4.3 Riprap Sizing 23
3.5 ROADWAY RESTORATION 23
3.6 ENVIRONMENTAL CONSIDERATIONS 24
3.7 GEOTECHNICAL DESIGN CONSIDERATIONS 24

5. OPERATION AND MAINTENANCE 25

6. COST ESTIMATES 27

6.1 CONSTRUCTION COST ESTIMATE SUMMARY 27

7. FUTURE DESIGN CONSIDERATIONS 29

8. REFERENCES 31

LIST OF FIGURES

Figure 1.1 – Vicinity Map 2
Figure 1.2 – Location Map 3
Figure 1.3 – Typical Bank Erosion 4
Figure 1.4 – Existing (3) 12'W x 12'H RCB under Alicia Parkway 4
Figure 1.5 – Existing Grouted Riprap Placement (South Bank) 5
Figure 2.1 – HEC-RAS Cross Section Locations (Existing Conditions) 8
Figure 2.2– Computed 100-Year WSELs of Proposed Sulphur Creek Extension 10
Figure 2.3 – Computed 100-Year WSEL of Proposed J03P02 Extension 11

Figure 3.1 – Overall Layout of Proposed Improvements for 35% Level Design 15
Figure 3.2 – Typical Section of Sheet Pile Wall (Alternative 1) 16
Figure 3.3 – Typical Section of Drop Structures (Alternative 3) 17
Figure 3.4 – Typical Section of RCB Culvert Extension 18
Figure 3.5 – Typical RCB Ripples Details 19
Figure 3.6 – Typical Section of Bank Protections 20
Figure 3.7 – Typical Section of Roadway Restoration 24

LIST OF TABLES

Table 2.1 – Estimated WSELs at the Aliso Creek and Sulphur Creek Confluence 9
Table 2.2 – Computed Wave Lengths, Transition Lengths, and Shear-Stress Distances for Curved Channels 12
Table 3.1– Computed Maximum Riprap Size and Thickness 23
Table 6.1 – Cost Estimate Summary for 35% Level Design 27

LIST OF APPENDICES

A. Hydraulics Results

B. 35% Level Design Plans

C. Scour Analysis and CHANLPRO Output Printouts

D. Cost Estimates

1. INTRODUCTION

The Aliso Creek watershed, which includes Aliso Creek (main stream) and several tributaries (including Sulphur Creek), is located in Orange County on the coast of Southern California (Figure 1.1). Aliso Creek drains a long, narrow coastal watershed from the Cleveland National Forest to the Pacific Ocean. The terrain is generally hilly, and varies from being somewhat steep in the upper reaches to being somewhat flat in the middle reaches. The lower portion has steep hillsides surrounding a narrow canyon. The 34.6-square-mile watershed includes portions of the cities of Lake Forest, Aliso Viejo, Mission Viejo, Laguna Niguel, Laguna Hills, and Laguna Beach.

This study focuses on a lower portion of Sulphur Creek, near its confluence with Aliso Creek in the vicinity of Aliso Creek Road and Alicia Parkway within the City of Laguna Niguel (Figure 1.2). The limit of the project extends from approximately 350 feet downstream of the confluence (downstream limit) to just upstream of the Alicia Parkway culvert crossing on Sulphur Creek (upstream limit).

Currently, the study reach downstream of the Alicia Parkway culvert is a natural channel with channel banks that are very high and steep (both south and north banks) or near vertical (north bank), caused by channel erosion and invert degradation. The north bank, which lies between Aliso Creek and Sulphur Creek, is a culturally sensitive area. On the south bank, there is an existing roadway as well as underground utility lines, including a 36-inch diameter Electronic Throttle Module (ETM) pipe, located approximately parallel to the existing roadway.

1.1 Purpose and Scope of Work

The purpose of this study is to evaluate the existing hydraulic conditions of the study reach near the confluence area between Aliso Creek and Sulphur Creek, and to provide the 35% level design that would improve and stabilize existing banks to protect existing facilities and culturally sensitive areas. The 35% level design would be based on the restoration and improvement measures of the selected conceptual design alternative (Alternative 2) from the Conceptual Design Report prepared by Tetra Tech, Inc. (Tetra Tech) and submitted to South Orange County Wastewater Authority (SOCWA) in October of 2012.

The 35% level design drawings were prepared to show the layout of the proposed improvements. A planning-level cost estimate was prepared for planning purposes only. The proposed-conditions hydraulic analysis was performed in order to hydraulically size the proposed design elements of the project.

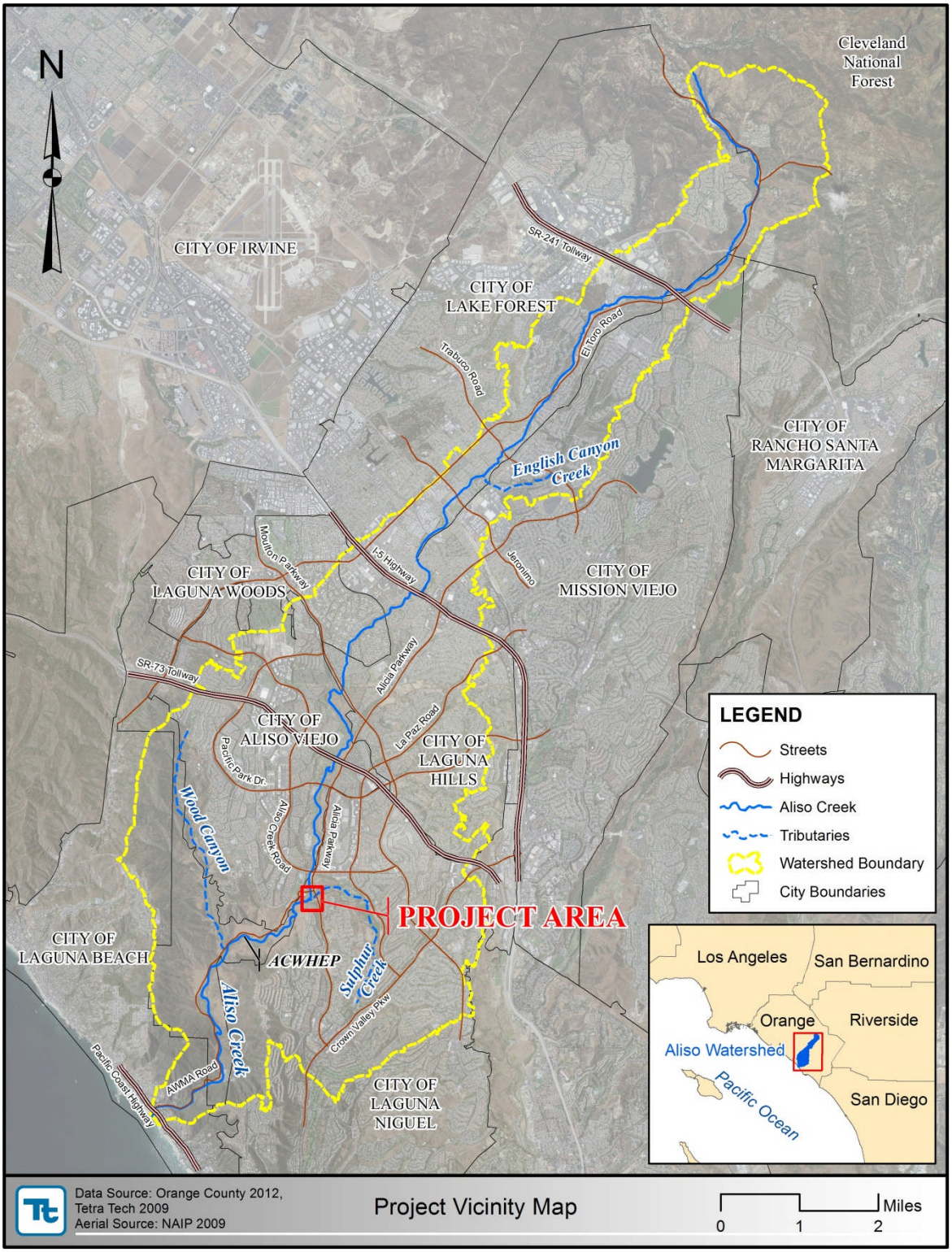

Figure 1.1 – Vicinity Map

Figure 1.2 – Location Map

1.2 Existing Conditions

Various locations along and within the project reach are shown on Figure 1.3 through Figure 1.5.

Figure 1.3 – Typical Bank Erosion

Figure 1.4 – Existing (3) 12'W x 12'H RCB under Alicia Parkway

Figure 1.5 – Existing Grouted Riprap Placement (South Bank)

1.3 Survey Mapping

The existing topographic mapping of the project area was provided by the Orange County in March 25, 2008, for the *Aliso Creek Mainstream Ecosystem Restoration Study*, conducted by Tetra Tech (Tetra Tech, 2008). Its 1-foot contour interval, bank-to-bank mapping was generated from a 1:4,300 scale Light Detection and Ranging (LiDAR) photo taken at an altitude of 2,000 feet above terrain. This mapping covers Aliso Creek from downstream of the drop structure for the Aliso Creek Wetland Habitat Enhancement Project(ACHWEP) to upstream of the Aliso Creek Road Bridge; and Sulphur Creek from its confluence with Aliso Creek to immediately upstream of the culvert under Alicia Parkway (Figure 1.1).

Although this existing topographic mapping was surveyed five years prior to this project, it was assumed that for the level of detail required for this study, the 2008 survey mapping would be sufficient for use in achieving the project goals. It is recommended that, in the future, a survey of current topographic conditions be conducted for the construction-level design phase of the work.

The horizontal control for the topographic mapping is based on the California Coordinate System (CCS83) Zone VI, North American Datum of 1983 (NAD83), and the vertical control is based on the North American Vertical Datum of 1988 (NAVD88). All units are in U.S. survey feet.

This page intentionally left blank

2. HYDRAULIC ASSESSMENTS

2.1 Hydrology

No new hydrologic analysis was performed for this study. Per the Scope of this study, discharges from the previous study and as-built plans were used for Sulphur Creek and existing storm drain system (Orange County storm drain facility I.D. J03P02), which drains into Sulphur Creek, respectively. Based on the *Lower Aliso Creek Erosion Assessment Study* (Tetra Tech, 2012), prepared by Tetra Tech for the SOCWA, the discharge of 3,150 cubic feet per second (cfs) for the 100-year flood event was selected. For the discharge from the existing storm drain, J03P02, the 100-year level discharge of 1,310 cfs was selected based on the 1988 as-built plans of the facility (County, 1988). The combined drainage area of Sulphur Creek and the existing storm drain system, J03P02, at the Aliso Creek confluence is approximately six (6) square miles.

It should be noted that new hydrologic analysis may be necessary for the construction-level design in future in order to incorporate any change in hydrologic conditions and urban development of upstream watershed.

2.2 Previous Hydraulic Models

Per the Scope of Work, the existing hydraulic models from previous hydraulic studies were utilized to evaluate hydraulic parameters of existing-conditions for this project, and were also used as the basis for the development of the proposed-conditions hydraulic model in order to hydraulically size project elements. For this study, the existing Hydrologic Engineering Center River Analysis System (HEC-RAS) model along Sulphur Creek from the 2012 Tetra Tech study, described above, was used as a base model to simulate existing hydraulic conditions along Sulphur Creek. This model only extended from the Aliso Creek confluence to the downstream face of the existing culvert under Alicia Parkway. Additionally, the existing HEC-RAS model along Aliso Creek from the DRAFT *Aliso Creek F4 Geomorphic Assessment Study* (Tetra Tech, 2010), a study prepared by Tetra Tech for the U.S. Army Corps of Engineers (USACE), Los Angeles District, was used, as necessary, to provide additional geometric information along the Aliso Creek.

It should be noted that the previous models were developed and used for specific purposes of those particular studies, and any hydraulic parameters including water surface elevations (WSELs), resulting from these previous models and subsequent proposed-conditions models, should not be used as absolute design parameters to determine future construction level design plans.

2.3 Development of Hydraulic Models

2.3.1 Existing-Conditions Model

In order to create an existing-conditions model, the existing 2012 HEC-RAS model along the Sulphur Creek, described in Section 2.2, was improved to include the existing 3-cell, 12-foot wide by 12-foothigh Reinforced Concrete Box ((3) 12’Wx12’H RCB) culvert under Alicia

Parkway, based on the as-built plans (County, 1968, & County, 1999). In addition, the cross sections along Aliso Creek, near the confluence, were extracted from the existing 2010 HEC-RAS model and were incorporated into the project model. The layout of cross sections used for the project is shown on Figure 2.1.

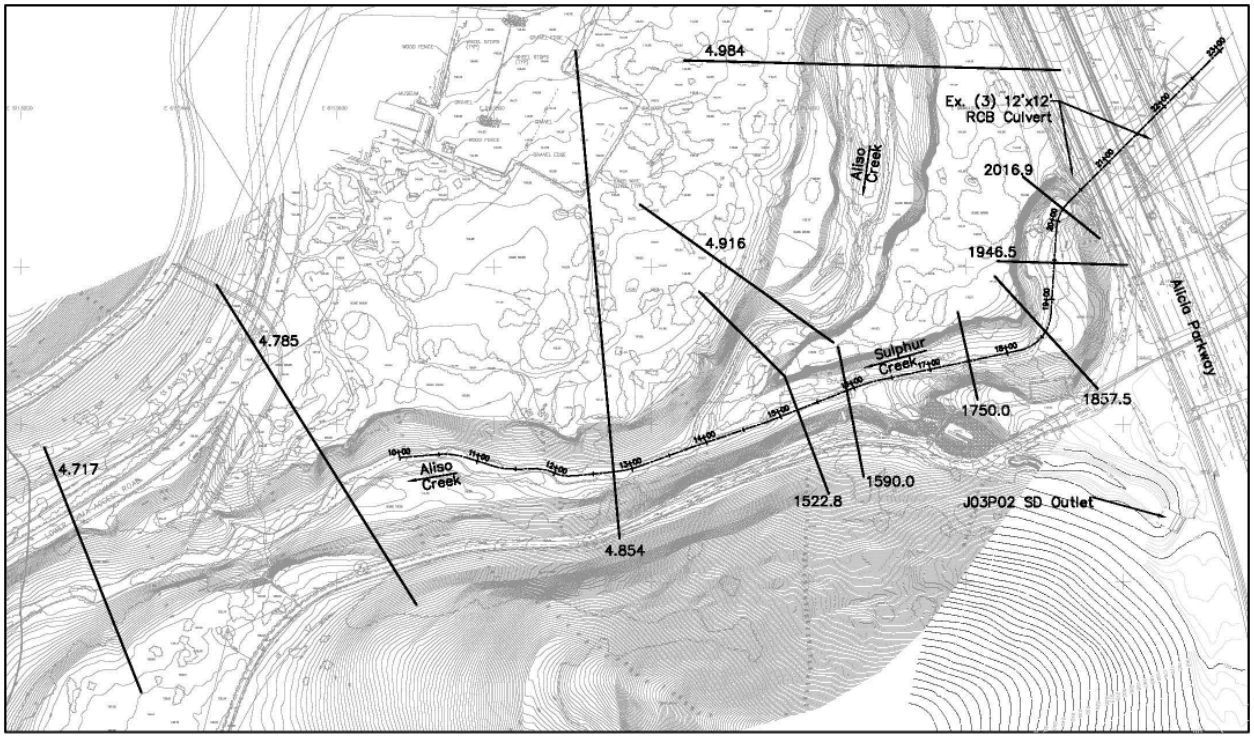

Figure 2.1 – HEC-RAS Cross Section Locations (Existing Conditions)

2.3.2 Proposed-Conditions Model

The existing-conditions model from Section 2.2.1 was revised to reflect the 35% level design conditions. Specifics of the proposed conditions, including typical sections, are described further in Section 3. In the proposed-conditions model, the existing (3) 12'Wx12'H RCB culvert under Alicia Parkway was extended downstream, before transitioning into (3) 9'Wx12'H RCB culvert.
The existing storm drain system, J03P02, which currently discharges into an open channel, a tributary to Sulphur Creek, was modeled with a new 8'Wx5'H RCB culvert replacing the open channel. The new 8'Wx5'H RCB then transitioned into a 9'Wx12'H RCB as it turns east and runs parallel to the Sulphur Creek RCB culvert extension before discharging at the Aliso Creek confluence. The layout of the proposed design components that were modeled into the hydraulic model is shown in Figure 3.1.

For the Manning 'n' value, a value of 0.015 was used for the concrete RCB segment. But a higher Manning's 'n' value of 0.025, to model series of concrete ripples, was assigned to the upstream end of a flatter reach along the RCB extensions to force hydraulic jumps and reduce flow velocity within the proposed system.

The proposed-conditions model begins at the Aliso Creek confluence and extends upstream. The WSEL of Aliso Creek at the confluence was used as the downstream control of the hydraulic model. The WSEL at the confluence was determined by linearly interpolating between the WSELs of two adjacent sections along Aliso Creek (i.e., upstream and downstream of the confluence) from the existing 2010 HEC-RAS model, described in Section 2.2. Table 2.1 summarizes the estimated 2-year, 5-year, 10-year, 25-year, 50-year, and 100-year WSELs at the two adjacent sections along Aliso Creek from the 2010 HEC-RAS model and the interpolated WSELs at the confluence. Assuming the flood frequency of Sulphur Creek is not necessarily the same as that of Aliso Creek during a particular flood event, these various WSELs of Table 2.1 were used in the proposed-conditions model as different downstream control scenarios in order to produce the most severe hydraulic conditions for the project elements that would require the most conservative design parameters.

Table 2.1 – Estimated WSELs at the Aliso Creek and Sulphur Creek Confluence

River Station	Profile	WSEL (ft)
Station 4.916 (U/S of Aliso Creek and Sulphur Creek Confluence)	2-year	120.80
	5-year	123.09
	10-year	124.57
	25-year	126.24
	50-year	127.33
	100-year	128.49
At Aliso Creek and Sulphur Creek Confluence[1]	2-year	120.27[2]
	5-year	122.38[2]
	10-year	123.73[2]
	25-year	125.23[2]
	50-year	126.18[2]
	100-year	127.19[2]
Station 4.854 (D/S of Aliso Creek and Sulphur Creek Confluence)	2-year	119.67
	5-year	121.58
	10-year	122.79
	25-year	124.09
	50-year	124.89
	100-year	125.72

1. Aliso Creek and Sulphur Creek Confluence is approximately 174 feet upstream from River Station 4.854.
2. WSEL at the confluence is linearly interpolated between two adjacent river stations.

2.3.3 Limitation of HEC-RAS Model

A HEC-RAS model, in general, has limitations in modeling a RCB culvert using a HEC-RAS culvert module, when the system includes grade breaks and/or curves inside the culvert. Therefore, the RCB culvert was modeled in HEC-RAS as a concrete open channel with two piers, and with-cover and without-cover to simulate unpressurized-flow and pressurized-flow conditions, respectively. Additionally, wave actions that may take place along curved segments in supercritical condition and superelevation of flow could not be estimated by the HEC-RAS model and were discussed further in Section 2.3.5.

2.3.4 Hydraulic Results

Computed water surface elevations of the proposed system for the design discharge (100-year level discharge) for both Sulphur Creek and the storm drain system, J03P02, are depicted in Figures 2.2 and Figure 2.3. Detailed outputs of the HEC-RAS model are presented in Appendix A.

The exit flow velocity from the proposed RCB culvert is very high when the flow is not affected by the backwater condition from Aliso Creek. For the 100-year discharge along Sulphur Creek, backwater effects from Aliso Creek begins to lessen when Aliso Creek conveys less than 10-year discharge and are at the lowest for the 5-year discharge at the confluence, listed in Table 2.1. During the 5-year discharge event along Aliso Creek, which produces the lowest WSEL at the confluence, the project model would generate the most severe hydraulic conditions, or the fastest RCB exit flow velocity.

As shown on Figures 2.2 and 2.3, assigning the higher Manning's 'n' value of 0.025 at the upstream end of flatter reach forced supercritical flow from upstream to experience a hydraulic jump to subcritical flow regime, which would continue to the downstream end of the culverts. This transition to the subcritical regime is necessary to reduce the exit flow velocity and avoid designing of the culvert downstream protection for unnecessarily severe hydraulic conditions.

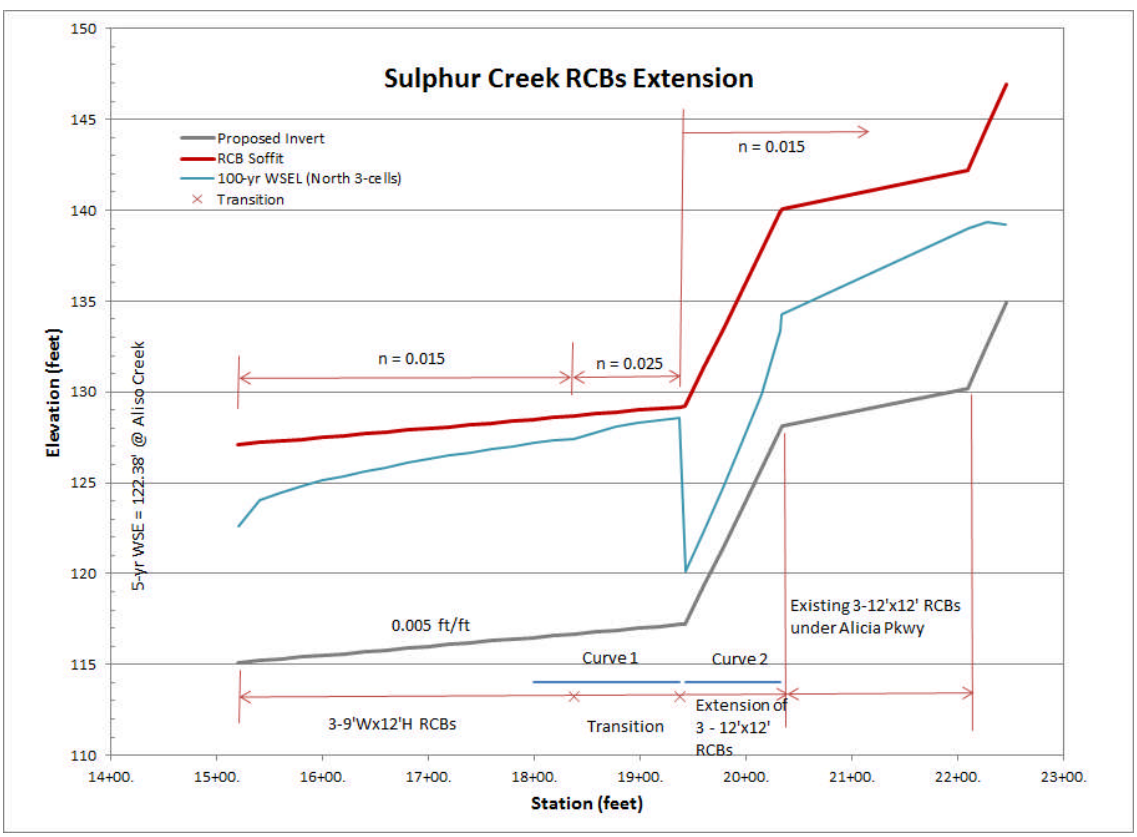

Figure 2.2– Computed 100-Year WSELs of Proposed Sulphur Creek Extension

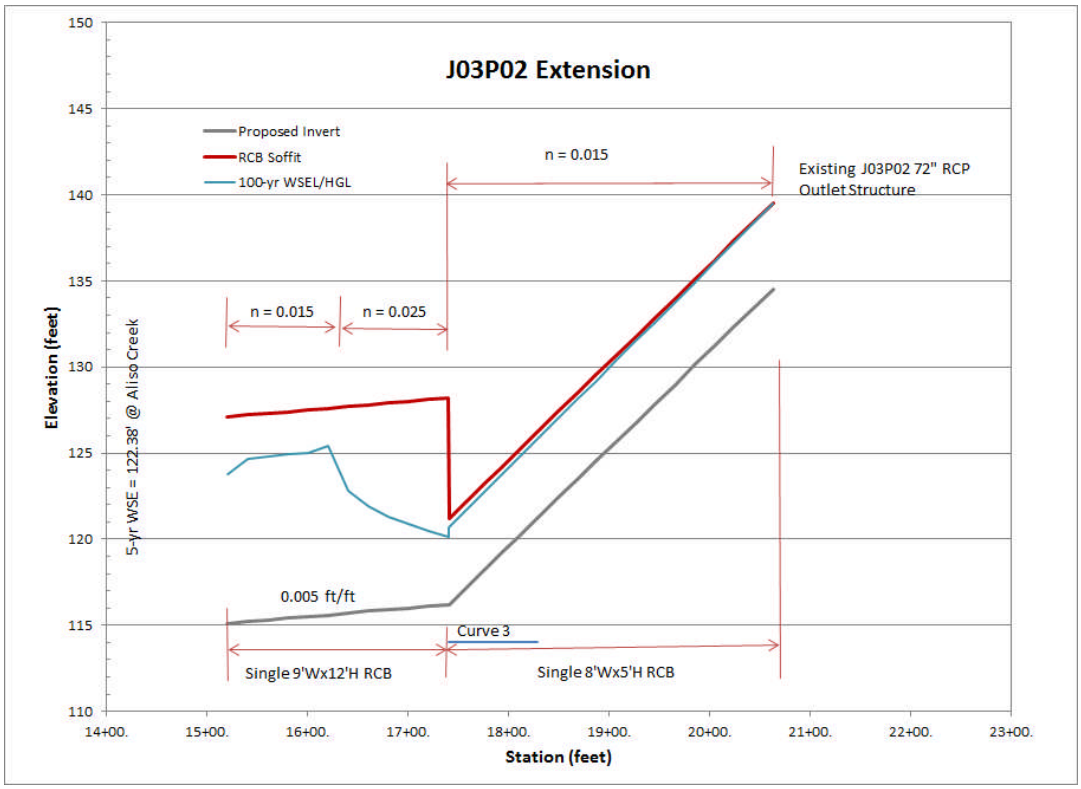

Figure 2.3 – Computed 100-Year WSEL of Proposed J03P02 Extension

2.3.5 Curved Channel Cross-Waves, Superelevation, and Transition Length

Cross-waves usually occur in supercritical flow within channels of nonlinear alignment and/or within channels with non-prismatic cross sections (Chow, 1959). Considering the supercritical flow in a curved channel of constant width, b, and radius, r, the first disturbance caused by the curvature of the outer and inner walls start at the beginning of the curve and travel with an angle β, which can be approximated by the equation, $\sin^{-1}\left(\sqrt{gy}/V\right)$, where g is the gravitational acceleration, y is the flow depth, and V is the flow velocity.

Two propagation fronts would meet and diverge to reach the opposite side of the curved channel walls. They would continue to be reflected back and forth across the channel, causing the surface profiles along the walls to have a series of maxima and minima of water-surface elevation. The distance between the maxima and maxima and the minima and minima can be approximated by the wavelength of "2b/tan β", with a wave amplitude of "V2b/2rg". The minimum disturbance could occur at multiple wavelength distances, as measured from the beginning of the curvature (Chow, 1959).

According to the USACE's *Engineering Manual (EM) 1110-2-1601* (USACE, 1994) and in the *Orange County Design Manual* (County, 2000), in a curved open channel the rise (superelevation) in water surface between a theoretical level at the channel centerline and a theoretical level at the outside wall of the channel can be approximated by the following equation:

$$\Delta y = \frac{V^2 b}{gr},$$ (where Δy is the change in WSEL due to superelevation.)

In order to minimize the disturbance within the curved channel, the minimum transition length (minimum straight segment for effects of superelevation to disappear after a curved segment) at both ends of the curved channel, Ls, should be a minimum of 30 times the amount of superelevation, expressed mathematically as

$$L_s = 30\ \Delta y$$

In addition, Federal Highway Administration (FHWA) *Hydraulic Engineering Circular No. 22 (HEC-22)* (2009) provides an equation to compute bend-stress distance, Lp, due to increasing shear stress produced by the bend. The equation is:

$$Lp = 0.604\ R^{7/6} / n_b$$

Where R is the hydraulic radius and n_b is the Manning friction coefficient.

Incorporating the transition lengths and superelevation heights along the banks into the curved reach would minimize the impacts of wave actions, but would not diminish them totally. The computed wavelengths, transition lengths, and shear-stress distances, based on highest flow velocity and the largest hydraulic radius, are listed in Table 2.2 for a 100-year level discharge in Sulphur Creek, and the calculations are presented in Appendix A.

Table 2.2 – Computed Wave Lengths, Transition Lengths, and Shear-Stress Distances for Curved Channels

Curve Location	Max. Flow Velocity (feet/second)	Max. Hydraulic Radius (feet)	Superelevation[1], (Δy), (feet)	Wave Length (feet)	Transition Length Ls, (feet)	Shear Stress Distance, Lp, (feet)
Curve No. 2 (Upstream along Sulphur Creek Extension)	30.18	1.25	2.83	53	85	52
Curve No. 1 (Downstream of Sulphur Creek Extension)	10.91	3.36	0.37	N/A[2]	N/A[2]	165
Curve No. 3 (J03P02 Extension)	36.47	1.80	4.13	52	124	80

1. b = 9 ft; r = 90 ft; g = 32.2 ft/sec^2 used in computing superelevation.
2. Not computed for flow in subcritical regime.

There exist no specific design guidelines in the *EM 1110-2-1601* or in the *Orange County Design Manual* pertaining to the estimation of the disturbance length in supercritical regime for a closed conduit after a curved reach under either open-flow or pressurized-flow conditions. Additionally, due to its modeling limitation, the disturbance from one curve to the other curve

and its impacts downstream could not be addressed in the HEC-RAS model. However, as shown on Figures 2.2 and 2.3, a forced hydraulic jump and subsequent transition to subcritical flow regime downstream of the upstream curve was incorporated into our hydraulic model. This transition to subcritical flow regime would dampen any wave action propagated from the upstream. Additionally, the wave action of the flow would be further dissipated in the downstream straight segments (approximately 280 feet for the Sulphur Creek extension and 220 feet for the J03P02 improvement) which are longer than the transition length required in Table 2.2., before the flow exits the proposed RCB culvert.

2.4 Future Improvements to Hydraulic Model

The HEC-RAS models are based on the Orange County 2008 survey information. It is recommended that a new survey be performed along the project reach prior to preparation of a construction-level design in order to ensure that the model reflects the most current topographic conditions, especially considering existing banks of Sulphur and Aliso Creeks may have experienced recent channel degradation and scouring.

This page intentionally left blank

3. DEVELOPMENT OF 35% LEVEL DESIGN

Remediation and protection measures which should be provided within the project limits in order to protect the culturally sensitive area (north overbank) and the existing roadway and utilities (south overbank), while providing a natural habitat for existing species, are discussed below. Per the Scope of Work, the 35% level design was developed, incorporating these remediation and protection measures. The design was based on the selected conceptual alternative (Alternative 2) from the Conceptual Design Report prepared by Tetra Tech and submitted to SOCWA in October of 2012. Additionally, the design elements were sized and laid out based on the results of the hydraulic analysis, presented in Section 2, *Hydraulic Assessments*. Details of the 35% level design are also presented in the design plans (Appendix B).

Generally, both the north and south banks of Sulphur Creek would be protected between the existing Alicia Parkway culvert and its confluence with Aliso Creek by constructing a RCB culvert extension. On the south bank downstream of the confluence, the bank protection with toedown would be constructed for approximately 350 feet of distance. The existing storm drain system, J03P02, which currently drains into Sulphur Creek from southeast would also be improved to accommodate the construction of the RCB extension along Sulphur Creek. The overall layout of the proposed improvements is shown in Figure 3.1.

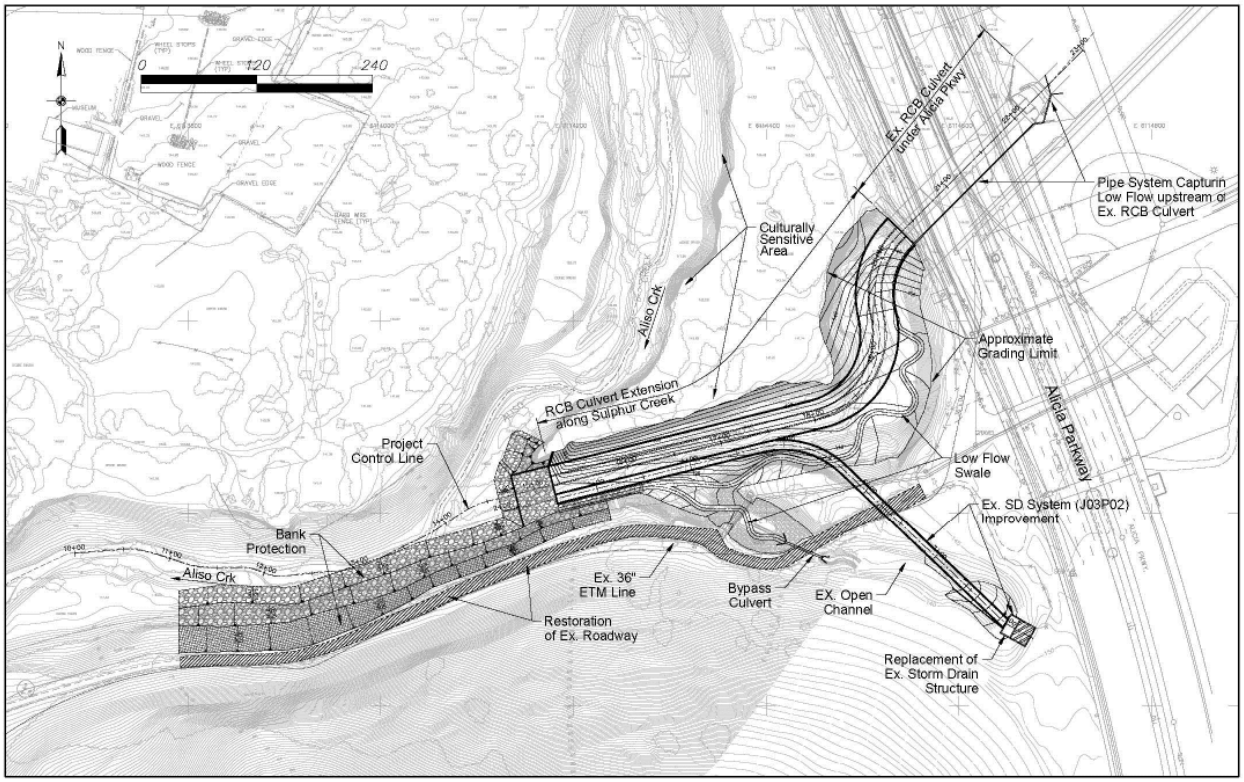

Figure 3.1 – Overall Layout of Proposed Improvements for 35% Level Design

3.1 Formulation of Conceptual Design Alternatives

In the Conceptual Design study in October of 2012, three (3) conceptual alternatives were analyzed to protect the existing banks and facilities. A planning level cost estimate for each conceptual alternative was also prepared for comparison between the three alternatives. From these conceptual alternatives, Alternative 2, RCB Culvert Extension with Low-Flow Swale, was selected by SOCWA and developed further in this study into the 35% level design. The three conceptual alternatives were as follows:

- <u>Alternative 1 (Sheet-Pile/Secant-Pile Walls) – Not Selected</u>
  Alternative 1 consists of the construction of sheet-pile walls along the north bank and either a sheet-pile wall or a secant-pile wall along the south bank (Figure 3.2). The total height of each individual sheet pile or secant pile would be the sum of the potentially exposed height (from top of the walls to the invert of the river) plus the embedment depth (from the invert of the river to the bottom tip of the pile). The walls would be driven or drilled vertically and completely into existing bank along the top of bank. No part of the walls would be exposed unless a significant storm event was to remove soil in front of the walls.
- <u>Alternative 2 (RCB Culvert Extension with Low-Flow Swale) – Selected</u>
- <u>Alternative 3 (Drop Structures) – Not Selected</u>
  Alternative 3 consists of the construction of a series of grouted-riprap drop structures (Figure 3.3). A total of three (3) drop structures would be constructed, and would include a 50-foot long section of ungrouted riprap placed immediately downstream of each 3-foot-high drop structure. From the edges of each structure, ungrouted riprap and compacted fill would be placed at a 3(H):1(V) slope and be tied into existing banks, providing stability to the eroding banks. This bank protection would receive either ungrouted riprap protection only (north bank), or a combination of riprap at lower elevation and soil stabilization at upper elevation (south bank), similar to a "Type A" protection in Figure 3.6.

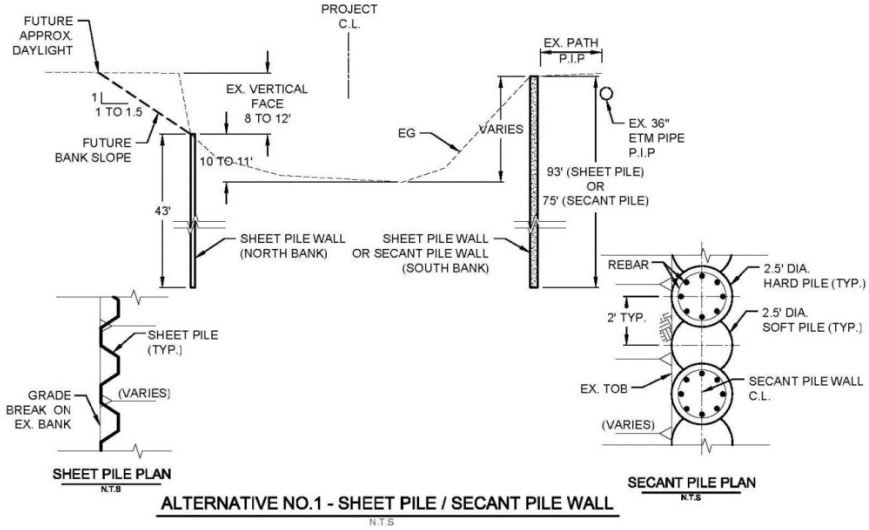

Figure 3.2 – Typical Section of Sheet Pile Wall (Alternative 1)

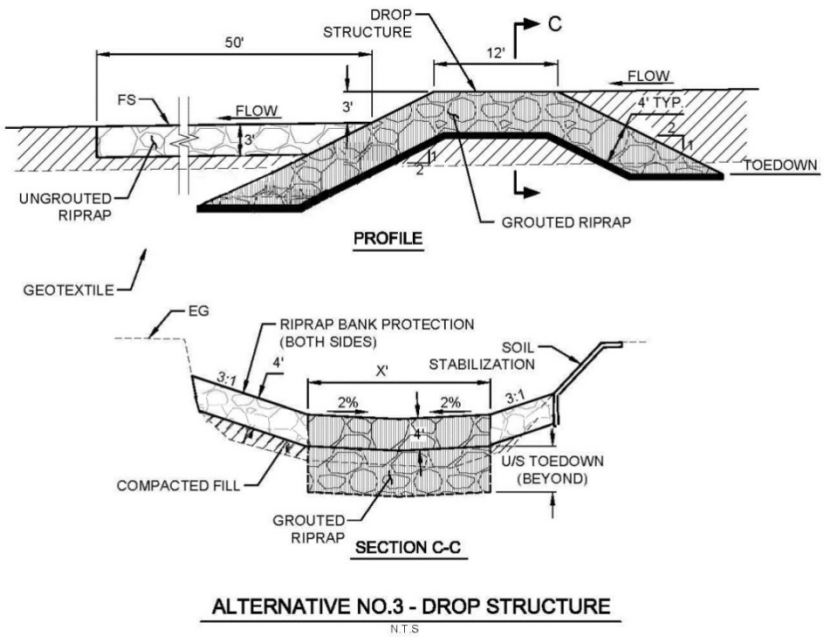

Figure 3.3 – Typical Section of Drop Structures (Alternative 3)

3.2 RCB Culvert Extension along Sulphur Creek

3.2.1 RCB Culvert with a Low-Flow Swale

The 35% level design includes the construction of a RCB culvert extension from the downstream face of the existing (3) 12'Wx12'H RCB culvert underneath Alicia Parkway to the confluence with Aliso Creek. Additionally, a low-flow swale would be constructed along a slightly different alignment than that of the RCB culvert extension. The low-flow swale, which would capture low flows from upstream of the existing culvert and bypass the existing culvert through a wall-attached pipe, would provide the non-storm creek flow necessary for preservation of natural habitat between Alicia Parkway and the Aliso Creek confluence. The low-flow swale would be lined with erosion protection material, such as Geoweb, to prevent any scour, which may take place due to a steep low-flow profile slope. Typical section of the RCB extension and low-flow swale is shown in Figure 3.4.

The RCB extension consists of the (3) 12'Wx12'H RCB culvert for approximately 97 feet immediately downstream of the existing culvert, which transitions into (3) 9'Wx12'H RCB culvert over an approximate length of 100 feet. Near the Aliso Creek confluence, the culvert would be joined by the new RCB culvert from the existing storm drain facility, J03P02, which runs side-by-side and ends at the same riprap invert protection. (See Figure 3.1. for layout of the RCB culverts. See Section 3.3 for discussion of the existing facility, J03P02, improvements.)

The construction of the culvert extensions and subsequent fill placement along the project reach would also provide stability to the existing banks which are currently experiencing channel erosion. It should be noted that the fill would be placed and RCB culvert would be constructed

over the existing natural habitat; however, new habitat would be created over the newly placed fill with a new low-flow swale that would provide water to the project reach and revegetation efforts.

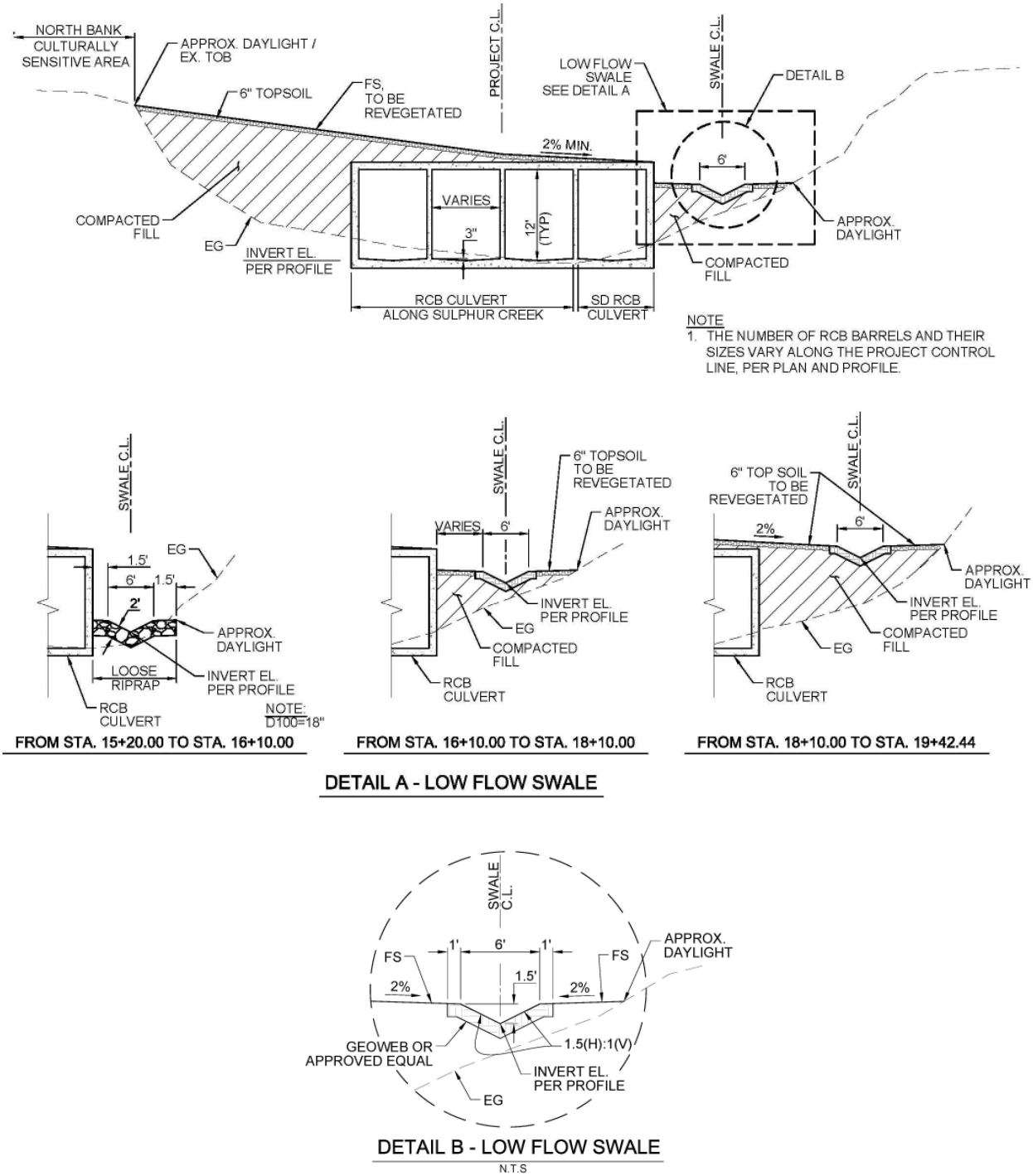

Figure 3.4 – Typical Section of RCB Culvert Extension

3.2.2 Cutoff Wall

The RCB culvert includes a vertical reinforced concrete cutoff wall at the downstream end. The cutoff wall would provide additional protection against the high velocity exit flow from the culvert in an emergency case where the riprap invert protection is washed away. The exit flow velocity could be more than 15 feet per second (fps) and could create a scour hole on soft-bottom immediately downstream of the culvert if the riprap invert protection is not in place, and eventually cause undermining of the structure.

Using a 'pressure plus momentum energy balance' analysis (County, 2000), the hydraulics of the combined flow between the exit flows of the Sulphur Creek RCB extension and J03P02 culvert could be estimated. The flow velocity of 13.15 fps and flow depth of 8.9 feet were estimated for the combined flow and were used in estimating the scour depth at the culvert outlet. Scour depth at the culvert outlet was estimated to be approximately 8 feet deep, based on the procedures outlined in the *City of Tucson Standards Manual for Drainage Design* (City of Tucson, 1998) and the computation details are presented in Appendix C.

3.2.3 RCB Ripples

The RCB culvert includes a series of reinforced concrete ripples, located in two different 100-foot segments along the invert and side walls of the RCB cells, as shown in Figure 3.5. The ripples would increase the surface roughness and cause a hydraulic jump of the flow into subcritical regime, which would, otherwise, flow in supercritical flow regime. Discussion of the hydraulic jump and its hydraulic effects is included in Section 2, *Hydraulic Assessments*.

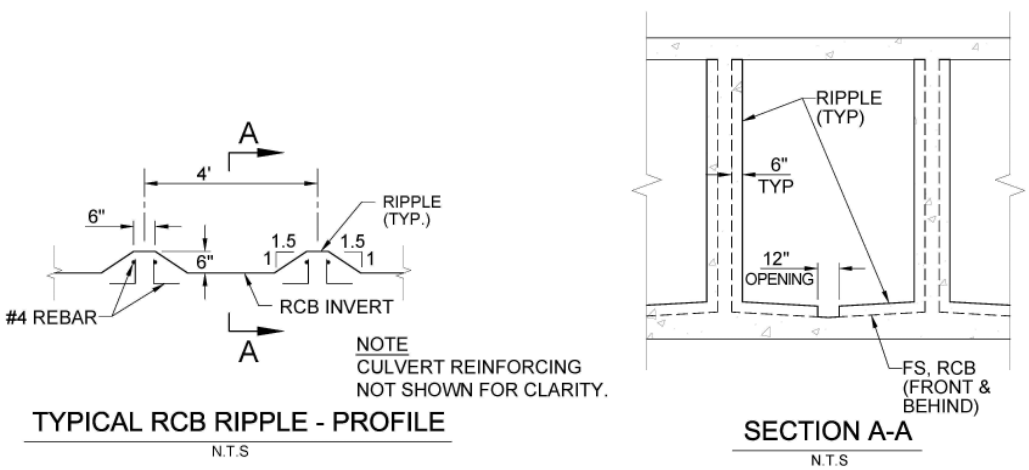

Figure 3.5 – Typical RCB Ripples Details

3.3 Existing Storm Drain (J03P02) Improvement

The existing outlet structure for the storm drain system, J03P02, is located approximately 450 feet south of the existing RCB culvert under Alicia Parkway and would be replaced with a new manhole-like structure. The existing outlet structure currently discharges flow into an open channel which drains into Sulphur Creek from the south bank. The new manhole-like structure

would convey storm flows into a 8'Wx5'H RCB culvert over a steep hillside, which would then transition into a 9'Wx12'H RCB culvert as it turns in a westerly direction and runs side-by-side with the (3) 9'Wx12'H RCB culvert extension along Sulphur Creek, described in Section 3.2. The RCB culvert for J03P02 ends at the same location as the main RCB extension and includes the 8-foot deep cutoff wall as well.

The new manhole-like structure, described above, also includes a small low-flow discharge pipe that would allow non-storm flows into the existing habitat over the existing open channel.

Additionally, the improvements for J03P02 include construction of a bypass pipe at the location of the existing road dip crossing, removal of existing grouted riprap on the south bank, and the placement of compacted fill in the area.

3.4 Bank Protection

3.4.1 General

On the south bank downstream of the confluence between Aliso Creek and Sulphur Creek, a combination of riprap at lower elevation and soil stabilization at upper elevation, as shown as 'Type A' in Figure 3.6, would be constructed and extended downstream for approximately 350 feet. Riprap would be placed up to 2 feet above the calculated 100-year water-surface elevation. Soil stabilization would likely be an open-block system or Geoweb-type that would hold the existing earthen bank in place while providing protection against surficial runoff from the top of banks.

At the southwest end of the Culturally Sensitive Area, or just north of the RCB outlet, "Type B" bank protection (Figure 3.6) would be constructed to key-in the riprap invert protection of the culvert, as shown in Figure 3.1,

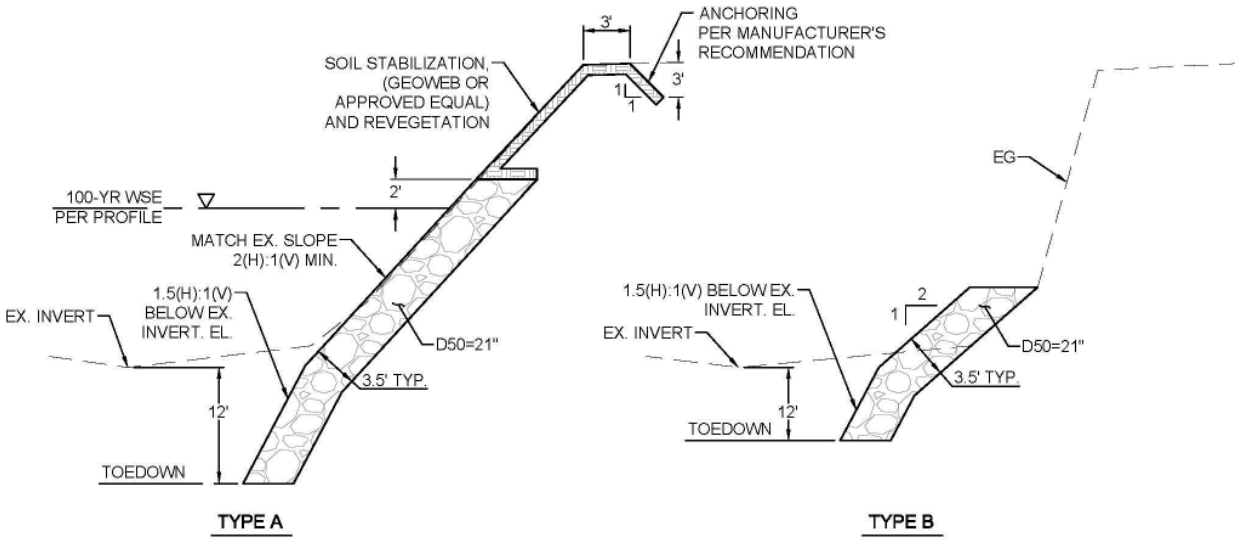

Figure 3.6 – Typical Section of Bank Protections

3.4.2 Aliso Creek Bed Scour Analysis

Toedown depth (12 feet) of the bank protection was determined based on the Aliso Creek Bed Scour Analysis. Various empirical equations and streambed hydraulic considerations were used to estimate total potential scour for this 35% level design. The total potential scour is normally computed as the sum of general scour, anti-dune trough depth, low-flow incisement, local scour, bend scour, confluence scour, and long-term system degradation. The following paragraphs describe each scour component. It is recommended that a detailed sediment and scour analyses be performed at the construction-level design phase to better quantify total potential scour.

3.4.2.1 General Scour

General scour is localized and is a temporary form of channel bed degradation that occurs in fluctuating response to a series of small flood events, or during a single large flood event. It could be caused by differential sediment transport with changing discharge over time, or by contractions or changes in the hydraulic characteristics of a stream. In this regard, a single-event, 100-year-flood sediment-transport analysis was performed for this study, using the following equation for general scour:

$$Z_{gs} = Y_{max}\left[\frac{0.0685 V_m^{0.8}}{Y_h^{0.4} S_e^{0.3}} - 1\right] \qquad \text{(Zeller, 1981)}$$

Where:

Z_{gs} = *General scour depth, in feet;*
V_m = *Velocity of flow, in feet per second;*
Y_{max} = *Maximum depth of flow, in feet;*
Y_h = *Hydraulic depth of flow, in feet; and,*
S_e = *Energy slope, in feet per foot.*

General scour for this project was computed to be 0.5 feet.

3.4.2.2 Anti-Dune Trough Depth

Bed forms are a second form of temporary scour that can occur during the passage of a flood event, primarily in sand-bed channels. They are called either dunes (occurring typically during subcritical flow conditions) or anti-dunes (occurring typically during critical or supercritical flow conditions), and for anti-dunes it is customary to consider one half of the anti-dune height, from crest to trough, as the bed-form scour component, except that the maximum height of the anti-dune cannot exceed one-half the depth of flow in the channel. Based on this relationship, an equation was developed by Kennedy (excerpted from Simons, Li & Associates, 1982). This relationship is:

$$Z_a = \frac{1}{2}(0.14)\frac{2\pi V_m^{\ 2}}{g} = 0.0137 V_m^{\ 2}$$

Based upon a maximum channel velocity of 12.33 fps, the maximum one-half anti-dune height for the Aliso Creek channel is 2.1 feet.

3.4.2.3 Low-Flow Incisement

Low-flow incisement is the result of natural-forming channel threads formed inside the primary channel by low flows that carry low-flow discharges. There is no known methodology for predicting low-flow channel depth; however, if a low-flow thalweg is predicted to be present, it should be assumed to be at least two feet deep within large (regional) watercourses, unless field observations indicate otherwise. Based upon field observation of the streambed along the leveed reach, a low-flow channel of two feet was assumed.

3.4.2.4 Local Scour

Local scour is observed whenever an abrupt change in the direction of flow occurs. Abrupt changes in flow direction can be caused by obstructions to flow, such as bridge piers, abrupt constrictions at bridge abutments, or grade controls/drop structures. Based on the previous sediment transport assessments conducted by Tetra Tech for other studies, no local scour was considered in the channel bed scour analysis for this project (Tetra Tech, 2010 & 2012).

3.4.2.5 Bend Scour

Bend scour normally occurs along the outside of bends, and is caused by spiral, transverse currents which form within the flow as the water moves around the bend. Presently, there is no single procedure which will consistently and accurately predict bend scour over a wide range of hydraulic conditions. However, a relationship was developed by Zeller (1981) for estimating bend scour in sand-bed channels based upon the assumption of the maintenance of constant stream power within the channel bend. This relationship is as follows:

$$Z_{bs} = \frac{0.0685 Y_{max} V_m^{0.8}}{Y_h^{0.4} S_e^{0.3}} \left[2.1 \left(\frac{\sin^2(\alpha/2)}{\cos\alpha} \right)^{0.2} - 1 \right] \qquad \text{(Zeller, 1981)}$$

Where:

- Z_{bs} = *Bend-scour component of total scour depth, in feet;*
- V_m = *Maximum velocity of flow immediately upstream of bend, in feet per second;*
- Y_{max} = *Maximum depth of flow immediately upstream of bend, in feet;*
- Y_h = *Maximum Hydraulic depth of flow immediately upstream of bend, in feet;*
- S_e = *Maximum Energy slope immediately upstream of bend (or bed slope for uniform-flow conditions), in feet per foot; and,*
- α = *Angle formed by the projection of the channel centerline from the point of curvature to a point which meets a line tangent to the outer bank of the channel, in degrees.*

The bend scour is usually assumed to be zero (0) for bends with deflection angles less than 17.8^o. The deflection angle is approximately 34° in the vicinity of the confluence of Aliso Creek and Sulphur Creek, therefore, the bend scour is estimated to be 4.5 feet at this location.

3.4.2.6 Total Scour

Based on the previous sediment transport assessments conducted by Tetra Tech (2010 & 2012), this reach of the Aliso Creek is in fairly stable conditions without significant lateral and vertical channel migrations over the last 20 years and experienced aggradation, therefore, the long-term degradation is not considered. Furthermore, existence of the ACHWEP drop structure located approximately 1.2 miles downstream of the project site may prevent channel from further degradation. The maximum total potential scour depths of 9.1 and 4.6 feet are estimated for all components with and without bend scour, respectively. Multiplying by a safety factor of 1.3 to account for potential non-uniform flow distribution increases the total potential scour depths to 12 feet and 6 feet for a single 100-year flood event with and without bend scour, respectively. The bank protection toedown would be designed for potential scour depth of 12 feet for the 35% level design. Computations of the scour analysis are included in Appendix C.

3.4.3 Riprap Sizing

Based on the CHANLPRO computer program developed by the USACE, (USACE, 1998), the required "ungrouted" riprap stone size and its placement thickness for the bank protection were evaluated for the hydraulic conditions of the Aliso Creek (Table 3.1). The outputs of the CHANLPRO computer program are included in Appendix C.

Table 3.1– Computed Maximum Riprap Size and Thickness

Location	Max. Flow Depth (feet)	Max. Flow Velocity (feet/second)	D_{100} Maximum Size	Thickness
			(inches)	
Aliso Creek @ River Station 4.854	12.9	12.33	36[1]/42[2]	36[1]/42[2]
Sulphur Creek Outlet	8.9	13.15	36[1]	36[1]

1. Straight Reach
2. Bend Reach

The riprap bank protection would need to be the minimums of 36 and 42 inches thick with maximum D_{100} of 36 and 42 inches for straight and bended reaches, respectively. For constructability purpose, the size of all riprap used in this project would be D_{100} of 42 inches. Due to the possibility of Aliso Creek flow impinging on the south bank near the confluence area, it should be noted that further analysis may be necessary in order to determine whether additional placement of riprap is required in the area for the construction-level design.

3.5 Roadway Restoration

The existing roadway along the south overbank would be restored by over-excavation and placement of compacted fill and 4-inch thick road base to achieve a 10-foot minimum width roadway as shown in Figure 3.7. Any localized low points along the existing roadway on the south bank, which caused concentrated surface runoff and created drainage rills at the top of bank, would be repaired by re-grading and providing a constant profile slope toward the proposed low-flow swale area. In the areas, where the new bank protection is to be constructed,

the roadway restoration should extend towards top of bank to create tie-in with the bank protection material.

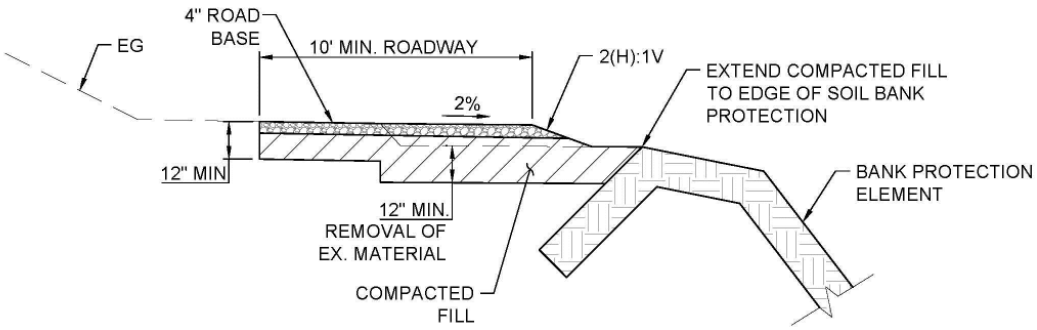

Figure 3.7 – Typical Section of Roadway Restoration

3.6 Environmental Considerations

The proposed improvements include temporary removal of existing habitat for the purpose of constructing the RCB culverts and recreation of habitats over finished surface. The project also would involve temporarily displacing current living species, which may be federally protected species. Further environmental and biological assessments would be necessary in order to analyze impacts to the existing habitat and living species due to construction activities. The assessments would also provide beneficial inputs in finalizing design elements and vegetation efforts.

Although no environmental analysis was performed for this study, it is assumed that the project will be self-mitigating by revegetating the disturbed construction area at a 1:1 ratio. The future planning phase would require an environmental analysis to finalize the design.

3.7 Geotechnical Design Considerations

No geotechnical boring or analysis was performed for this study. The information would be necessary to develop structural design of the RCB culverts and adjust any design parameters of any improvement feature. Soil characteristics and existence of bedrock underneath would also update the scour depth analysis and design toedown depth of this study. The future planning and construction-level of the design would require geotechnical analysis to finalize design details.

5. OPERATION AND MAINTENANCE

After the project is completed in place, a project specific Operation and Maintenance (O&M) plan should be developed and adopted. The plan should include an adaptive management plan to cover both repairs and monitoring and inspection programs of the project site. The O&M plan should cover repair and restoration recommendations to restore any damage caused by storm flows or changed conditions to the design conditions or improve them as necessary. The monitoring and inspection programs should take place both periodically and after any significant storm event (2-yr or greater). The critical areas that should be subjected to thorough monitoring and inspection efforts are identified as follows:

- Re-created Habitat – The project includes re-creation of nature habitat over finished surfaces. This habitat would be fed with water from the low-flow swales from both the RCB extension along Sulphur Creek and existing storm drain, J03P02, improvement. Depending on the seasonality, a temporary irrigation system and additional localized revegetation may be necessary for revegetated area at least until the new vegetation lasts through the minimum establishment period of the particular vegetation type.
- Erosion by Surface Runoffs – Low-flow swales and bordering surfaces are designed for a very steep profile slope because of design constraints. Any overflow from the swales, which are lined with Geoweb-type material, may flow with relatively fast velocity over adjacent areas and cause surface erosion and/or undermine the erosion-protection material along the swales, especially if the revegetation is not well-established. Additionally, drainage rills along the interface between the outside wall of the RCB culvert and compacted fill may result in seepage to the bottom of the culvert, threatening the structural integrity. The low-flow swales and adjacent areas should be monitored regularly and repaired at any signs of erosion and re-graded towards the low-flow swale. Any damage to the erosion-protection material should also be repaired in timely manner.
- Banks along Aliso Creek upstream of the Sulphur Creek Confluence –The alignment of Aliso Creek upstream of the confluence includes a few small bends that may cause the water to directly impinge into the existing bank, located behind an outer wall of the new RCB culvert (Figure 2.1.), before turning and merging with Sulphur Creek. This area which currently exhibits an almost vertical bank should be monitored for any sign of erosion. Significant loss of the bank material could eventually expose the RCB culvert if not restored or provided with erosion protection, and may threaten its structural stability.

This page intentionally left blank

6. COST ESTIMATES

A 35% level cost estimate was developed, for planning purposes only. The cost estimate, is based on the 35% design plans included in Appendix B, assume uniform subsurface conditions throughout the project limits, and a uniform application of the typical section for the project.

The 35% level cost estimate has increased over the Conceptual level cost estimate due to: hydraulic design parameters requiring deeper and larger riprap protection; added costs for grouted riprap removal and disposal; hydraulic design parameters requiring extension of J03P02 storm drain to the confluence; added cost for topsoil, revegetation and temporary irrigation; and updated unit prices.

No subsurface analysis was performed for this study, and an updated geotechnical exploration may alter the quantities shown in the cost estimates. In addition, restoration and mitigation costs for any environmentally sensitive areas that would be disturbed by the construction activities have not been approved by the environmental agencies. Additionally, any fees or permits required for construction or maintenance activities, or real estate requirements, are not included. A detailed engineer's estimate for construction cost would need to be updated on the basis of the construction-level design prepared in the future.

Detailed information on the quantity calculations is provided in Appendix D.

6.1 Construction Cost Estimate Summary

The estimated construction cost summary of proposed improvements is $ 5,338,000.

Table 6.1 – Cost Estimate Summary for 35% Level Design

	Contract Items	Unit	Quantity	Unit Cost	Total Cost
1.0	Mobilization	LS	1	$210,000.00	$210,000
2.0	Clearing and Grubbing	Acre	3.20	$7,500.00	$24,000
3.0	Existing Grouted Riprap Removal	LS	1.00	$90,000.00	$90,000
4.0	RCB Culvert Extension				
4.1	Excavation	CY	1,901	$17.50	$33,300
4.2	Compacted Fill	CY	9,430	$40.00	$377,200
4.3	Topsoil	CY	955	$40.00	$38,200
4.4	RCB Culvert Extension	LF	514	$4,430.00	$2,277,100
4.5	Riprap Invert Protection (at Downstream End)	CY	420	$100.00	$42,000
5.0	Storm Drain (J03P02) Improvement				
5.1	Storm Drain Outlet Structure Replacement	LS	1	$20,000.00	$20,000
5.2	Excavation	CY	3,180	$17.50	$55,700
5.3	Compacted Fill	CY	2,693	$27.25	$73,400
5.4	SD RCB Culvert	LF	545	$1,040.00	$566,800

	Contract Items	Unit	Quantity	Unit Cost	Total Cost
5.5	6" Low Flow Pipe	LF	67	$21.25	$1,500
5.6	Bypass Culvert under Dip Crossing w/ Headwalls	LS	1	$7,500.00	$7,500
6.0	Low Flow Swale				
6.1	Geoweb or Approved Equal (along Sulphur Creek)	SY	522	$10.75	$5,700
6.2	Geoweb or Approved Equal (D/S of J03P02)	SY	166	$10.75	$1,800
6.3	Riprap Protection (at Downstream End)	CY	65	$120.00	$7,800
6.4	Low Flow Capturing System	LS	1	$5,000.00	$5,000
6.5	12" Bypass Pipe	LF	308	$205.00	$63,200
7.0	Bank Protection (South Bank D/S of RCB)				
7.1	Riprap (Lower Elevation)	CY	2,030	$100.00	$203,000
7.2	Soil Stabilization (Upper Elevation)	SY	1,480	$10.75	$16,000
8.0	Bank Protection (Confluence Wrap-around)				
8.1	Riprap	CY	1,600	$100.00	$160,000
9.0	Roadway Restoration	CY	711	$35.00	$24,900
10.0	Revegetation	Acre	3.20	$20,000.00	$64,000
11.0	Temporary Irrigation	Acre	3.20	$25,000.00	$80,000
				Subtotal:	$4,448,100
		Contingencies		(@ 20%)	$889,700
				Subtotal:	$5,337,800
				Grand Total:	$5,338,000

7. FUTURE DESIGN CONSIDERATIONS

The 35% level design was based on available data at the time, in accordance with the Scope of Work for this project. It was assumed that for the level of detail that this study requires, this set of data would be sufficient to achieve the project goals. However, it is recommended that further study and additional efforts in gathering more recent information be performed in order to improve this design to be suitable for the construction-level design. The recommendations for the future design phase are summarized below.

- Topographic Data Consideration – Current topographic data used for this study was surveyed in 2008. It is recommended that updated topography from future survey data should be prepared that would reflect any change in geometry of the natural channel for the construction-level design.
- Hydraulic Model Consideration – Due to the complexities of the confluence with the local storm drain system, J03P02, and Aliso Creek, and design constraints of the cultural sensitive area, hydraulic models that are based on new survey data are recommended to better predict the channel hydraulics of the proposed system in order to finalize the design details.
- Scour Consideration – The north bank of Aliso Creek downstream of the Sulphur Creek confluence may be subjected to scour due to the high exit velocity of the flow from the proposed culvert extension and narrower channel bottom geometry. The impact of the flow, from the culvert to the downstream channel, would need to be further assessed.
- Environmental/Biological Assessment Considerations – No environmental analysis was performed for this study. The proposed improvements would place fill along the natural streambed, and would involve re-creation of habitat over finished surfaces. Newly created habitat would include new hydrology and hydraulic conditions different from those of the existing habitat. Further environmental and biological assessments would be necessary in order to analyze impacts to existing habitat and living species, which may be federally protected.
- Geotechnical Design Consideration – No geotechnical borings or analyses were performed for this study. The future planning and construction-phase design would require geotechnical analysis to finalize the design details.

This page intentionally left blank

8. REFERENCES

Chow, V.T., 1959. *Open Channel Hydraulics*, McGraw-Hills, New York, 1959.

City of Tucson, 1998, *Standards Manual for Drainage Design and Floodplain Management in Tucson, Arizona*, prepared by Simons, Li & Associates for the City of Tucson, Engineering Division, Tucson, Arizona. 1998.

County of Orange. 1968. *Plans for the Construction of Narco Channel, Alicia Parkway to Sta. 82+00.00, Orange County, California.* Construction Plans for the Orange County Flood Control District, County of Orange, April, 1968.

County of Orange. 1988. *Plans for the Construction of Storm Drain Facility, J03P02-713-2 from Sta.63+25.44 to Sta.100+00.00, Orange County, California.* As-built Construction Plans for the Orange County Environmental Management Agency, County of Orange, August, 1991.

County of Orange. 1991. *Plans for the Construction of Alicia Parkway from 1970 ft. South of Aliso Creek Road to Avila Road, Orange County, California.* As-built Construction Plans for the Orange County Environmental Management Agency, County of Orange, August, 1991.

County of Orange. 2000. *Design Manual*, Orange County Flood Control District, County of Orange, August, 2000.

FHWA. 2009. *Urban Drainage Design Manual, Hydraulic Engineering Circular (HEC) No. 22*, Federal Highway Administration, Washington, DC, September 2009.

Simons, Li & Associates, 1982, "Engineering Analysis of Fluvial Systems," Fort Collins, Colorado. 1982.

Tetra Tech, Inc. 2009. *Aliso Creek Mainstream Ecosystem Restoration Study, Orange County, California.* Prepared for the U.S. Corps of Engineers, Los Angeles District, California, October, 2009.

Tetra Tech, Inc. 2010. DRAFT – *Aliso Creek F4 Geomorphic Assessment, Orange County, California.* Prepared for the U.S. Corps of Engineers, Los Angeles District, California, June, 2010.

Tetra Tech, Inc. 2012. *Lower Aliso Creek Erosion Assessment*, Orange *County, California*. Prepared for the South Orange County Wastewater Authority (SOCWA), County of Orange, California, April 2012.

Tetra Tech, Inc. 2012. *Draft Conceptual Alternatives Report, Stabilization of Confluence of Sulphur and Aliso Creeks*, Orange *County, California*. Prepared for the South Orange County Wastewater Authority (SOCWA), County of Orange, California, October 2012.

USACE. 1994. *Hydraulic Design of Flood Control Channels*, Engineering Manual 1110-2-1601, U.S. Army Corps of Engineers, Washington, DC, June 1994.

USACE. 1998. *User's Manual for CHANLPRO*,PC Program for Channel Protection Design. U.S. Army Corps of Engineers, Waterways Experiment Station. July 1998.

Zeller, M. E. 1981. Scour Depth Formula for Estimation of Toe Protection Against General Scour, Pima County Department of Transportation and Flood Control District, Tucson, Arizona.

This page intentionally left blank

Appendix A
Hydraulic Results

This page intentionally left blank

Sulphur Creek Extension

HEC-RAS Plan: ALT 2_9x12 River: Sulphur Reach: Below Alicia Pkw Profile: 100-yr

Reach	River Sta	Profile	Q Total	Min Ch El	W.S. Elev	Crit W.S.	E.G. Elev	E.G. Slope	Vel Chnl	Flow Area	Top Width	Froude # Chl
			(cfs)	(ft)	(ft)	(ft)	(ft)	(ft/ft)	(ft/s)	(sq ft)	(ft)	
Below Alicia Pkw	2245.3	100-yr	3150.00	134.90	139.18	139.18	140.84	0.002350	10.37	303.81	92.52	1.01
Below Alicia Pkw	2227.3*	100-yr	3150.00	132.54	139.36	137.46	140.29	0.000653	7.71	408.33	72.68	0.57
Below Alicia Pkw	2209.3	100-yr	3150.00	130.19	139.00	135.96	140.24	0.000447	8.94	352.49	53.67	0.53
Below Alicia Pkw	2129.45		Culvert									
Below Alicia Pkw	2033.9	100-yr	3150.00	128.10	134.30	134.30	137.39	0.004582	14.10	223.35	36.00	1.00
Below Alicia Pkw	2031.93	100-yr	3150.00	127.87	133.37	134.07	137.30	0.006337	15.92	197.86	36.00	1.20
Below Alicia Pkw	2014.03*	100-yr	3150.00	125.74	129.87	131.93	136.84	0.013863	21.18	148.73	36.00	1.84
Below Alicia Pkw	1996.13*	100-yr	3150.00	123.61	127.22	129.80	136.32	0.020180	24.21	130.14	36.00	2.24
Below Alicia Pkw	1978.23*	100-yr	3150.00	121.47	124.76	127.66	135.72	0.026282	26.56	118.60	36.00	2.58
Below Alicia Pkw	1960.33*	100-yr	3150.00	119.34	122.41	125.53	135.03	0.032223	28.51	110.48	36.00	2.87
Below Alicia Pkw	1942.44	100-yr	3150.00	117.21	120.11	123.41	134.26	0.037994	30.18	104.36	36.00	3.12
Below Alicia Pkw	1937.18	100-yr	3150.00	117.19	128.58	123.39	129.50	0.000969	7.68	410.20	36.00	0.40
Below Alicia Pkw	1917.18*	100-yr	3150.00	117.09	128.44		129.47	0.001137	8.12	387.97	34.28	0.43
Below Alicia Pkw	1897.18*	100-yr	3150.00	116.99	128.28		129.43	0.001354	8.63	365.17	32.58	0.45
Below Alicia Pkw	1877.18*	100-yr	3150.00	116.89	128.06		129.38	0.001645	9.24	341.09	30.86	0.49
Below Alicia Pkw	1857.18*	100-yr	3150.00	116.79	127.78		129.33	0.002045	9.97	315.89	29.16	0.53
Below Alicia Pkw	1837.18	100-yr	3150.00	116.69	127.41		129.25	0.002592	10.88	289.44	27.00	0.59
Below Alicia Pkw	1818.06*	100-yr	3150.00	116.59	127.34		129.17	0.007151	10.85	290.29	27.00	0.58
Below Alicia Pkw	1798.95	100-yr	3150.00	116.49	127.19		129.03	0.007241	10.91	288.77	27.00	0.59
Below Alicia Pkw	1779.02*	100-yr	3150.00	116.39	127.02		128.89	0.007353	10.98	286.93	27.00	0.59
Below Alicia Pkw	1759.1*	100-yr	3150.00	116.29	126.84		128.74	0.007475	11.05	284.97	27.00	0.60
Below Alicia Pkw	1739.17*	100-yr	3150.00	116.19	126.66		128.59	0.007613	11.14	282.81	27.00	0.61
Below Alicia Pkw	1719.25*	100-yr	3150.00	116.09	126.48		128.44	0.007764	11.23	280.50	27.00	0.61
Below Alicia Pkw	1699.32*	100-yr	3150.00	115.99	126.29		128.28	0.007932	11.33	278.01	27.00	0.62
Below Alicia Pkw	1679.4*	100-yr	3150.00	115.89	126.08		128.12	0.008132	11.45	275.15	27.00	0.63
Below Alicia Pkw	1659.47*	100-yr	3150.00	115.79	125.86		127.95	0.008361	11.58	272.01	27.00	0.64
Below Alicia Pkw	1639.55*	100-yr	3150.00	115.70	125.63		127.77	0.008667	11.75	267.98	27.00	0.66
Below Alicia Pkw	1619.62*	100-yr	3150.00	115.60	125.38		127.59	0.008987	11.93	263.99	27.00	0.67
Below Alicia Pkw	1599.7*	100-yr	3150.00	115.50	125.11		127.40	0.009377	12.14	259.40	27.00	0.69
Below Alicia Pkw	1579.77*	100-yr	3150.00	115.40	124.81		127.20	0.009869	12.40	253.99	27.00	0.71
Below Alicia Pkw	1559.85*	100-yr	3150.00	115.30	124.46		126.98	0.010532	12.74	247.31	27.00	0.74
Below Alicia Pkw	1539.92*	100-yr	3150.00	115.20	124.02		126.74	0.011536	13.22	238.26	27.00	0.78
Below Alicia Pkw	1520	100-yr	3150.00	115.10	122.60	122.60	126.36	0.017227	15.55	202.62	27.00	1.00

Sulphur Creek Extension

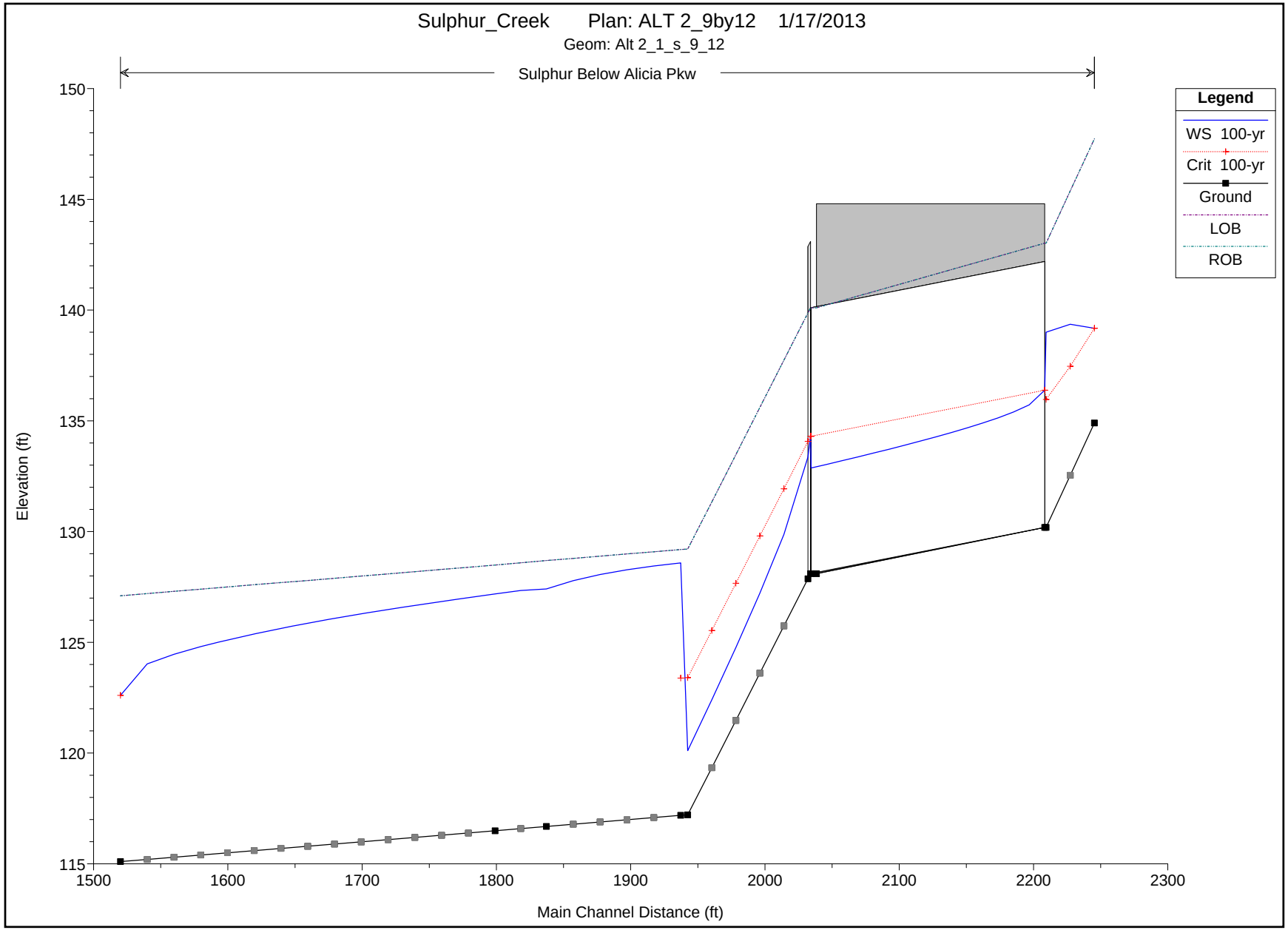

J03P02 Extension

HEC-RAS Plan: ALT 2_9x12 River: Sulphur Reach: Reach1a Profile: 100-yr

Reach	River Sta	Profile	Q Total	Min Ch El	W.S. Elev	Crit W.S.	E.G. Elev	E.G. Slope	Vel Chnl	Flow Area	Top Width	Froude # Chl
			(cfs)	(ft)	(ft)	(ft)	(ft)	(ft/ft)	(ft/s)	(sq ft)	(ft)	
Reach1a	2062.81	100-yr	1310.00	134.50	139.51	139.51	156.11	0.037470	32.69	40.07	8.00	2.57
Reach1a	2043.32*	100-yr	1310.00	133.40	138.35	138.41	155.33	0.038629	33.06	39.62	8.00	2.62
Reach1a	2023.83*	100-yr	1310.00	132.29	137.19	137.30	154.53	0.039706	33.41	39.21	8.00	2.66
Reach1a	2004.34*	100-yr	1310.00	131.19	136.04	136.20	153.71	0.040691	33.73	38.84	8.00	2.70
Reach1a	1984.86*	100-yr	1310.00	130.09	134.90	135.10	152.88	0.041620	34.02	38.50	8.00	2.73
Reach1a	1965.37*	100-yr	1310.00	128.98	133.75	133.99	152.04	0.042552	34.31	38.18	8.00	2.77
Reach1a	1945.88*	100-yr	1310.00	127.88	132.62	132.89	151.18	0.043394	34.57	37.89	8.00	2.80
Reach1a	1926.39*	100-yr	1310.00	126.78	131.49	131.79	150.29	0.044148	34.80	37.64	8.00	2.83
Reach1a	1906.91*	100-yr	1310.00	125.67	130.34	130.68	149.40	0.044917	35.03	37.39	8.00	2.86
Reach1a	1887.42*	100-yr	1310.00	124.57	129.22	129.58	148.50	0.045619	35.24	37.17	8.00	2.88
Reach1a	1867.93*	100-yr	1310.00	123.47	128.09	128.48	147.59	0.046290	35.44	36.97	8.00	2.91
Reach1a	1848.44*	100-yr	1310.00	122.36	126.96	127.37	146.66	0.046929	35.62	36.77	8.00	2.93
Reach1a	1828.96	100-yr	1310.00	121.26	125.84	126.27	145.72	0.047500	35.79	36.60	8.00	2.95
Reach1a	1811.36*	100-yr	1310.00	120.25	124.81	125.26	144.87	0.048040	35.94	36.45	8.00	2.97
Reach1a	1793.77*	100-yr	1310.00	119.24	123.78	124.25	144.00	0.048551	36.09	36.30	8.00	2.99
Reach1a	1776.18*	100-yr	1310.00	118.23	122.75	123.24	143.13	0.049035	36.23	36.16	8.00	3.00
Reach1a	1758.59*	100-yr	1310.00	117.22	121.72	122.23	142.25	0.049494	36.35	36.03	8.00	3.02
Reach1a	1741	100-yr	1310.00	116.21	120.70	121.22	141.36	0.049928	36.47	35.92	8.00	3.03
Reach1a	1740	100-yr	1310.00	116.21	120.16	124.90	141.24	0.142569	36.85	35.55	9.00	3.27
Reach1a	1720.*	100-yr	1310.00	116.11	120.50	124.80	137.58	0.107445	33.17	39.49	9.00	2.79
Reach1a	1700.*	100-yr	1310.00	116.01	120.88	124.70	134.75	0.081476	29.89	43.82	9.00	2.39
Reach1a	1680.*	100-yr	1310.00	115.91	121.32	124.60	132.55	0.061692	26.88	48.73	9.00	2.04
Reach1a	1660.*	100-yr	1310.00	115.81	121.89	124.50	130.80	0.045790	23.96	54.68	9.00	1.71
Reach1a	1640.*	100-yr	1310.00	115.71	122.80	124.40	129.34	0.030914	20.53	63.82	9.00	1.36
Reach1a	1620.*	100-yr	1310.00	115.60	125.44	124.29	128.84	0.013782	14.80	88.54	9.00	0.83
Reach1a	1600.*	100-yr	1310.00	115.50	125.03		128.65	0.005359	15.27	85.77	9.00	0.87
Reach1a	1580.*	100-yr	1310.00	115.40	124.92		128.55	0.005378	15.30	85.64	9.00	0.87
Reach1a	1560.*	100-yr	1310.00	115.30	124.80		128.45	0.005399	15.32	85.51	9.00	0.88
Reach1a	1540.*	100-yr	1310.00	115.20	124.67	123.87	128.34	0.005435	15.36	85.27	9.00	0.88
Reach1a	1520	100-yr	1310.00	115.10	123.77	123.77	128.15	0.006747	16.78	78.05	9.00	1.00

J03P02 Extension

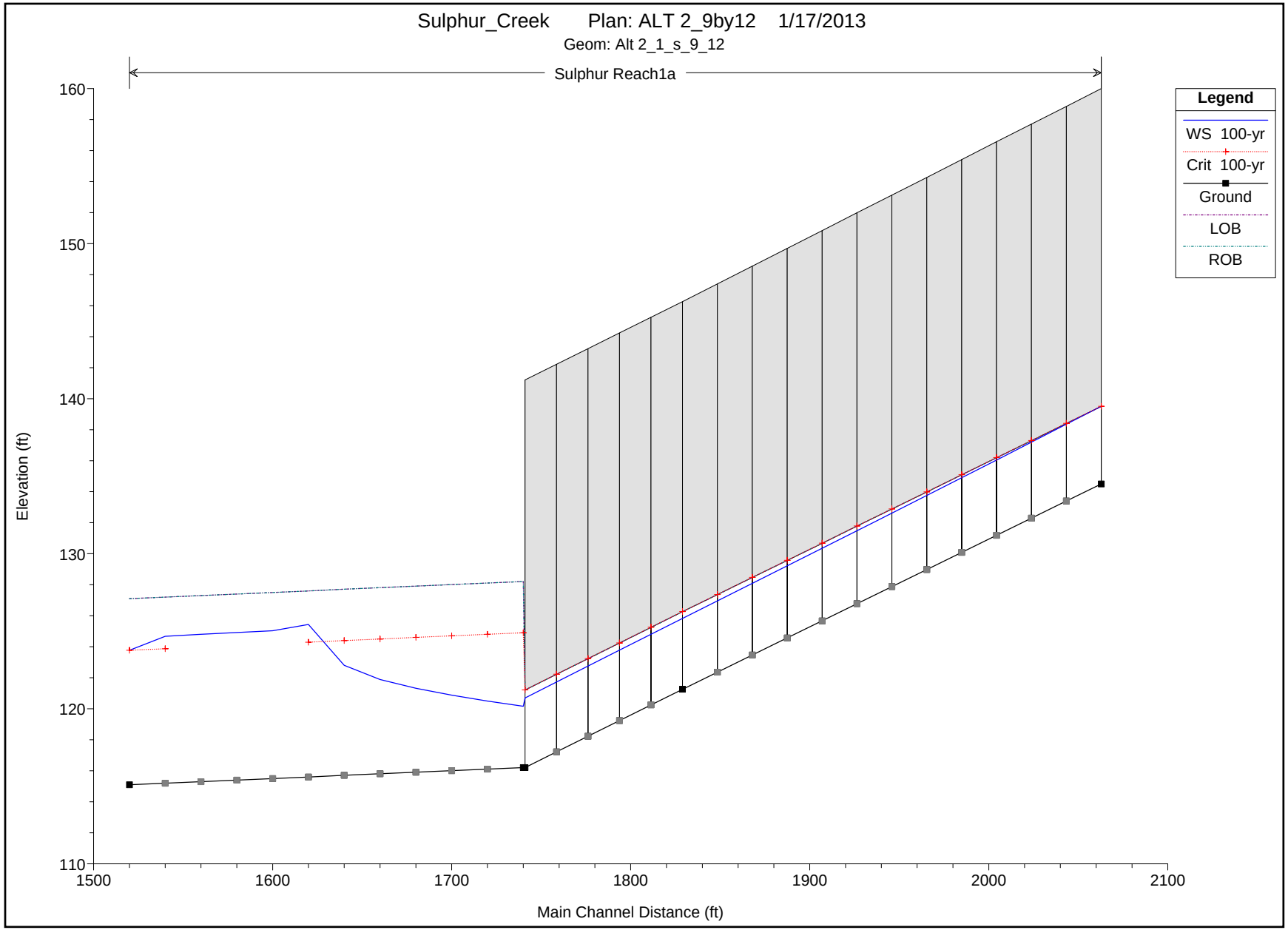

Computations of Superelevations, Wave Lengths, and Transition Lenghts

R =	90	B =	12								
5-yr WSE @ Aliso Creek											
Station	Flow Depth	Velocity	Froude No.	Δy (e)	Ls = 30*e	***R***	Lp	Cross Wave Length		β	
2031.93	5.5	15.92	1.2	0.79	23.6	2.11	96	12		0.989812	Curve 2
2014.03	4.13	21.18	1.84	1.39	41.8	1.68	74	28		0.575762	
1996.13	3.61	24.21	2.24	1.82	54.6	1.50	65	36		0.461548	
1978.23	3.29	26.56	2.58	2.19	65.7	1.39	59	43		0.397943	
1960.33	3.07	28.51	2.87	2.52	75.7	1.31	55	48		0.356225	
1942.44	2.9	30.18	3.12	2.83	84.9	1.25	52			0.32593	
1828.96	4.58	35.79	2.95	3.98	119.3	1.83	81	50		0.346185	Curve 3
1811.36	4.56	35.94	2.97	4.01	120.3	1.82	81	50		0.343896	
1793.77	4.54	36.09	2.99	4.04	121.3	1.81	81	51		0.341625	
1776.18	4.52	36.23	3	4.08	122.3	1.81	80	51		0.339471	
1758.59	4.5	36.35	3.02	4.10	123.1	1.80	80	51		0.337526	
1741	4.49	36.47	3.03	4.13	123.9	1.80	80	52		0.335983	
USACE, Hydraulic Design of Flood Control Channels, EM 1110-2-1601, 1994											
Orange County Flood Control District Design Manual, 2000											
	$e = V^2b/(gR)$										
	g =	32.2									
	b =	9									
	R =	90									
Federal Highway Administration, 2009. Hydraulic Engineering Circular No. 22, 3rd Edition, Urban Drainage Design Manual, Washington DC											
$L_p = Ku\boldsymbol{R}^{7/6}/n_b$			(5-16)								
where:											
L_p = length of protection (length of increased shear stress due to the bend)											
downstream of the point of tangency, m (ft)											
n_b = Manning's roughness in the channel bend											
R = hydraulic radius, m (ft)											
K_u = 0.736 (0.604 in English Units)											
V.T. Chow, Open Channel Hydraulics (1959)											
Wave length =		2b/tan(β)									
$\beta = \sin^{-1}(\sqrt{gy}/V)$											

Reference: Federal Highway Administration, 2009. Hydraulic Engineering Circular No. 22, 3rd Edition, Urban Drainage Design Manual, Washington DC

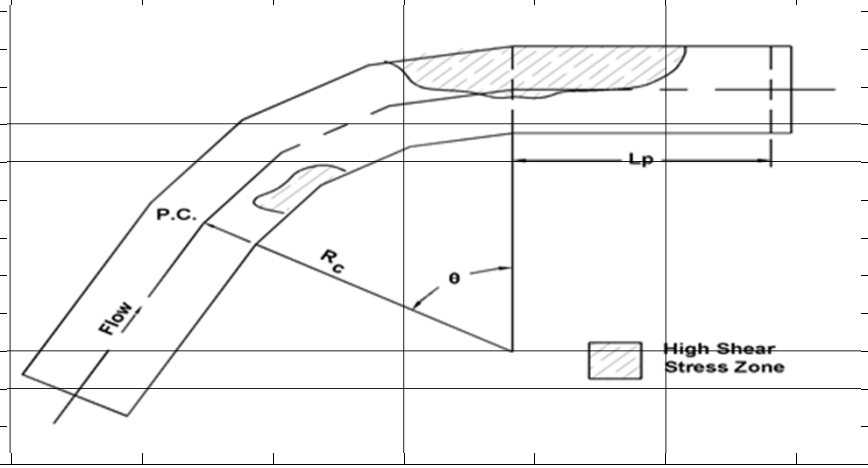

Figure 5-5. Shear stress distribution in channel bends.

The increased shear stress produced by the bend persists downstream of the bend a distance L_p, as shown in figure 5-5. This distance can be computed using the following relationship:

$$L_p = KuR^{7/6}/n_b \qquad (5\text{-}16)$$

where:

L_p = length of protection (length of increased shear stress due to the bend) downstream of the point of tangency, m (ft)

n_b = Manning's roughness in the channel bend

R = hydraulic radius, m (ft)

K_u = 0.736 (0.604 in English Units)

Computations of Shear-Stress Distances

Without Aliso Creek Backwater: R = 90'							
Curve 2	BC 19+42.44 to EC 20+31.93						
River Sta	Q Total	Depth	B	R	Ku	n_b	Lp
2031.93	3150	5.5	9	2.11	0.604	0.015	96.03
2014.03	3150	4.13	9	1.68	0.604	0.015	73.74
1996.13	3150	3.61	9	1.50	0.604	0.015	64.80
1978.23	3150	3.29	9	1.39	0.604	0.015	59.17
1960.33	3150	3.07	9	1.31	0.604	0.015	55.24
1942.44	3150	2.9	9	1.25	0.604	0.015	52.18
Curve 1	BC 17+98.95 to EC 19+37.18						
River Sta	Q Total	Depth	B	R	Ku	n_b	Lp
1937.18	3150	11.39	9	3.49	0.604	0.015	172.96
1917.18	3150	11.35	9	3.48	0.604	0.015	172.52
1897.18	3150	11.29	9	3.47	0.604	0.015	171.87
1877.18	3150	11.17	9	3.45	0.604	0.015	170.56
1857.18	3150	10.99	9	3.41	0.604	0.015	168.57
1837.18	3150	10.72	9	3.36	0.604	0.015	165.54
1818.06	3150	10.75	9	3.37	0.604	0.015	165.88
1798.95	3150	10.7	9	3.36	0.604	0.015	165.32
Lateral Flow 1,310 cfs adding to South Cell: R = 90'							
Curve 3	BC 17+41 to EC 18+28.96						
River Sta	Q Total	Depth	B	R	Ku	n_b	Lp
1828.96	1310	4.58	9	1.83	0.604	0.015	81.26
1811.36	1310	4.56	9	1.82	0.604	0.015	80.93
1793.77	1310	4.54	9	1.81	0.604	0.015	80.60
1776.18	1310	4.52	9	1.81	0.604	0.015	80.27
1758.59	1310	4.5	9	1.80	0.604	0.015	79.94
1741	1310	4.49	9	1.80	0.604	0.015	79.77

This page intentionally left blank

Appendix B
35% Level Design Plans

This page intentionally left blank

ORANGE COUNTY, CALIFORNIA

STABILIZATION OF CONFLUENCE OF SULPHUR & ALISO CREEKS

35% DESIGN PLANS

CITY OF LAGUNA NIGUEL

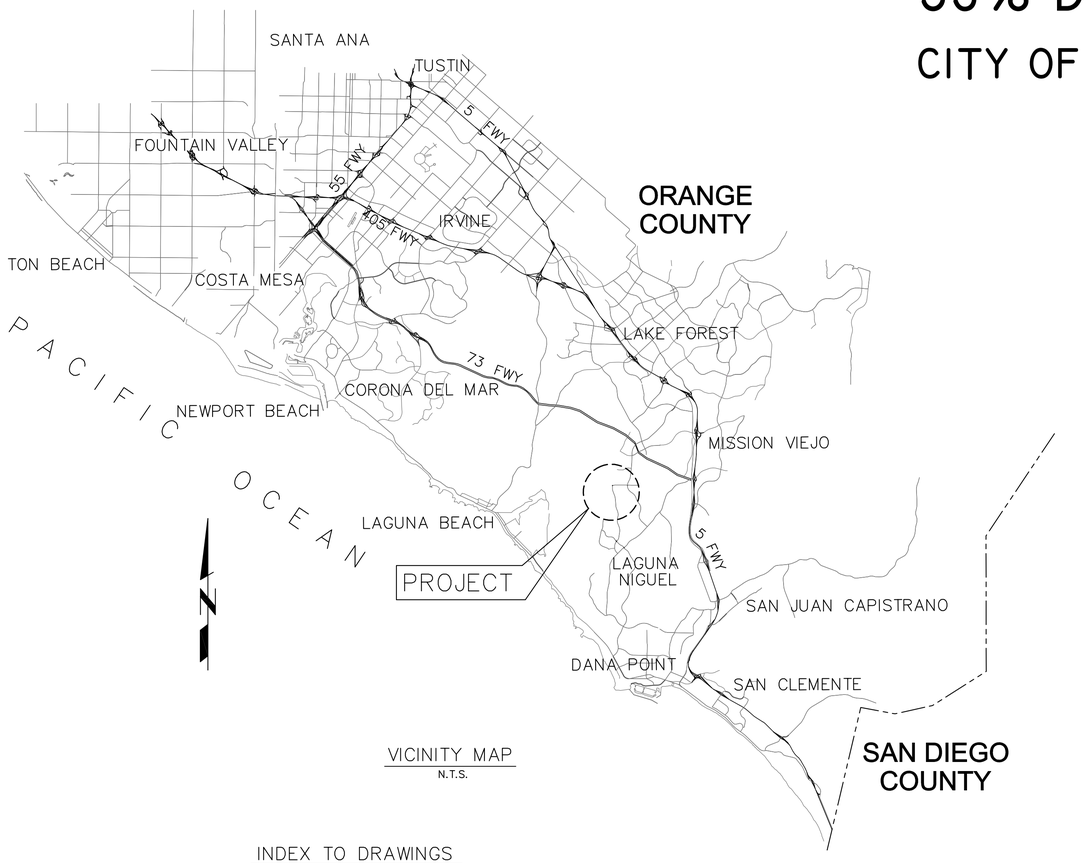

VICINITY MAP
N.T.S.

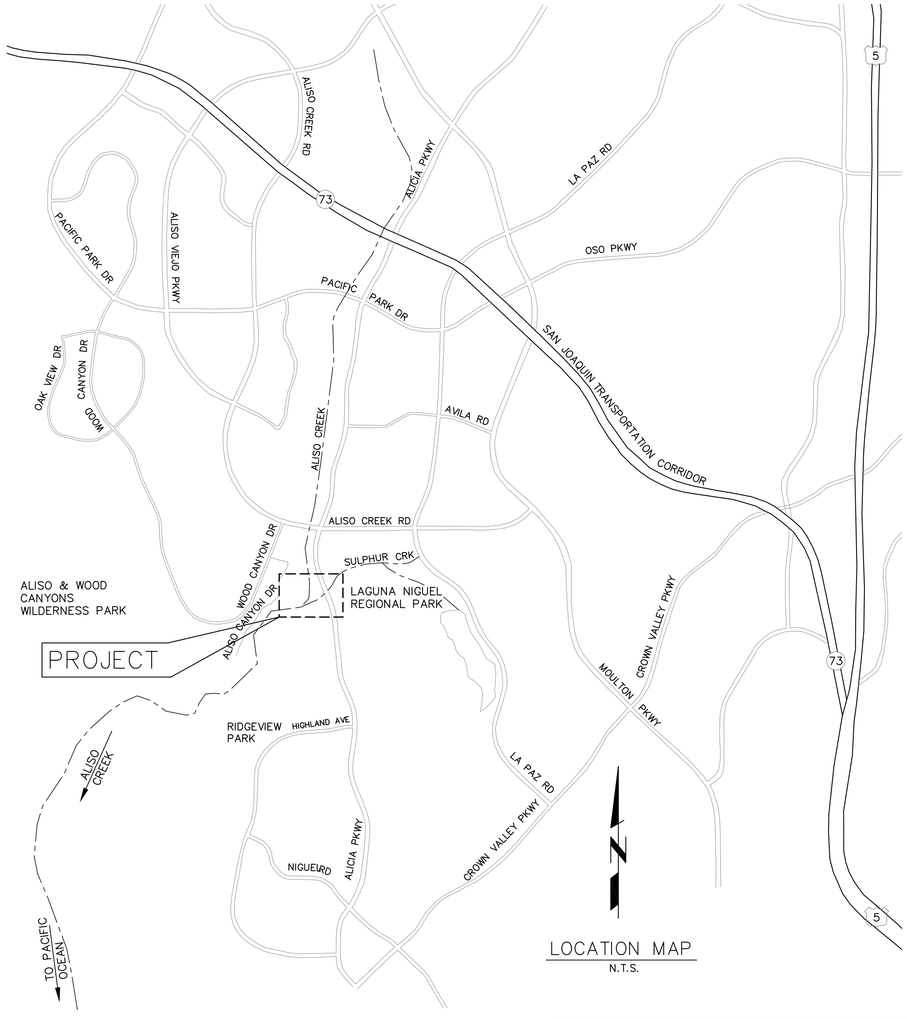

LOCATION MAP
N.T.S.

INDEX TO DRAWINGS

SHEET NO.	TITLE
1	GENERAL PLAN
2	GENERAL NOTES & ABBREVIATIONS
3	PLAN AND PROFILE (1) – SULPHUR CREEK
4	PLAN AND PROFILE (2) – SULPHUR CREEK
5	PLAN AND PROFILE (1) – SD RCB
6	PLAN AND PROFILE (2) – SD RCB
7	TYPICAL SECTIONS
8	CROSS SECTIONS

TETRA TECH, INC.
17885 Von Karman Avenue, Suite 500
Irvine, CA 92614
Phone (949) 809-5000, FAX (949) 809-5003

SOUTH ORANGE COUNTY WASTEWATER AUTHORITY
SULPHUR CREEK CONFLUENCE STABILIZATION

GENERAL PLAN

DATE 01/24/13

SHT NO. 1 OF 8

P:\Wat\T29884 Sulphur-Aliso Creeks Improvements\04_Design\01_T29884G001CVR.dwg 01/17/2013 14:29

GENERAL

1. HORIZONTAL DATUM IS BASED ON THE DATUM OF CALIFORNIA COORDINATE SYSTEM (CCS83) ZONE VI, NORTH AMERICAN DATUM OF 1983 (NAD 83), IN U.S. SURVEY FEET, WHILE VERTICAL DATUM IS BASED ON NATIONAL AMERICAN VERTICAL DATUM (NAVD) OF 1988 IN U.S. SURVEY FEET.

2. A COPY OF THESE CONTRACT DRAWINGS SHALL BE KEPT IN AN EASILY ACCESSIBLE LOCATION ON THE SITE AT ALL TIMES DURING CONSTRUCTION.

3. DETAILS ON THE CONTRACT DRAWINGS ARE INTENDED TO SHOW THE FINAL RESULT OF DESIGN. MINOR MODIFICATIONS MAY BE REQUIRED TO SUIT JOB SITE DIMENSIONS OR CONDITIONS, AND SUCH MODIFICATIONS SHALL BE INCLUDED AS PART OF THE WORK. NO CHANGES TO THE CONTRACT DRAWINGS ARE ALLOWED WITHOUT WRITTEN APPROVAL OF THE CONTRACTING OFFICER.

4. ALL REVISIONS TO THESE CONTRACT DRAWINGS SHALL BE APPROVED BY THE SOUTH ORANGE COUNTY WASTEWATER AUTHORITY (SOCWA) PRIOR TO CONSTRUCTION, AND ANY CHANGES SHALL BE CLEARLY MARKED ON THE AS-BUILT DRAWING AND SUBMITTED TO THE SOCWA.

5. ALL WORK SHALL BE DONE BY A CONTRACTOR HAVING A VALID CONTRACTOR'S LICENSE ISSUED BY THE STATE OF CALIFORNIA REGISTRAR OF CONTRACTORS.

6. THE CONTRACTOR SHALL COMPLY WITH ALL LOCAL, STATE AND FEDERAL REGULATIONS RELATED TO THE SAFETY OF PERSONNEL AND THE PUBLIC ON THE JOB SITE, INCLUDING APPLICABLE OCCUPATIONAL SAFETY AND HEALTH ADMINISTRATION (OSHA) REGULATIONS AND, IN PARTICULAR, THOSE DEALING WITH TRENCHING AND SHORING.

7. DURING THE COURSE OF ALL WORK ON THE PROJECT, THE CONTRACTOR SHALL ASSUME SOLE AND COMPLETE RESPONSIBILITY FOR ALL JOB SITE CONDITIONS INCLUDING SAFETY OF ALL PERSONS AND SECURITY OF ALL PROPERTY. THE CONTRACTOR SHALL SUPERVISE AND DIRECT THE WORK USING THE SKILLS AND ATTENTION UTILIZED WITHIN THE INDUSTRY. THE CONTRACTOR SHALL BE SOLELY RESPONSIBLE FOR ALL CONSTRUCTION MEANS, METHODS, TECHNIQUES, SEQUENCES AND PROCEDURES AND FOR COORDINATING ALL PORTIONS OF THE WORK UNDER THIS CONTRACT. THIS REQUIREMENT SHALL APPLY CONTINUOUSLY AND NOT BE LIMITED TO NORMAL WORKING HOURS. THE CONTRACTOR SHALL DEFEND, INDEMNIFY AND HOLD THE SOCWA AND THE ENGINEER HARMLESS FROM ANY AND ALL LIABILITY REAL OR ALLEGED, IN CONNECTION WITH THE PERFORMANCE OF THE WORK ON THIS PROJECT, EXCEPTING LIABILITY ARISING FROM THE SOLE NEGLIGENCE OF THE SOCWA OR THE ENGINEER.

8. ALL BID ITEMS ARE COMPLETE IN PLACE, INCLUDING FURNISHING ALL MATERIALS, EQUIPMENT, TOOLS, SUPPLIES, INCIDENTALS, TRANSPORTATION, EXPERIENCED PERSONNEL AND SUPERINTENDENCE REQUIRED, UNLESS OTHERWISE NOTED IN SPECIFICATIONS.

9. THE CONTRACTOR SHALL PROTECT ALL ADJACENT PROPERTY AND EXISTING AND NEW IMPROVEMENTS, AND SHALL PROVIDE POSITIVE CONTROL OF EARTH SPILLAGE, CONSTRUCTION WATER AND RUNOFF WATER FROM THE SITE. ANY DAMAGE TO EXISTING IMPROVEMENTS THAT ARE NOT INDICATED ON THE CONTRACT DRAWINGS FOR MODIFICATION OR REMOVAL, INCLUDING, BUT NOT LIMITED TO, EXISTING 36-INCH ETM PIPE, EXISTING ROADWAY, AND PART OF EXISTING RCB CULVERT NOT DESIGNATED FOR MODIFICATION, SHALL BE REPAIRED TO ORIGINAL CONDITIONS BY THE CONTRACTOR AT NO COST TO THE SOCWA.

10. ALL TRASH, RUBBLE, AND DEBRIS, INCLUDING BURIED TRASH, RUBBLE, AND DEBRIS WITHIN THE PROJECT LIMITS SHALL BE REMOVED AND DISPOSED BY THE CONTRACTOR AT AN APPROVED OFF-SITE LOCATION. CONTRACTOR SHALL PAY FOR ALL ASSOCIATED DUMPING FEES.

11. ALL FEES AND PERMITS ASSOCIATED WITH THE PROJECT SHALL BE PAID FOR BY THE CONTRACTOR.

12. IF UNANTICIPATED CONDITIONS ARE ENCOUNTERED DURING THE COURSE OF CONSTRUCTION, THE CONTRACTOR SHALL IMMEDIATELY BRING THE CONDITION TO THE ATTENTION OF THE SOCWA.

13. IT IS THE CONTRACTOR'S RESPONSIBILITY TO PROTECT THE PROJECT AT ALL TIMES FROM ANY UNEXPECTED INCREASE OR FLUCTUATION IN FLOWS ALONG THE STREAM DURING THE ENTIRE CONSTRUCTION PERIOD. ADDITIONALLY, THE CONTRACTOR SHALL BE AWARE AND MONITOR OTHER SOURCES OF INFLOW SUCH AS STORM DRAINS THAT MAY AFFECT THE RIVER FLOW.

14. THE CONTRACTOR SHALL BE RESPONSIBLE FOR SITE SECURITY DURING THE ENTIRE CONSTRUCTION OF THE PROJECT AND SHALL COORDINATE WITH AND MAINTAIN ACCESS FOR AFFECTED UTILITY OWNERS.

15. ALL EXCAVATED MATERIAL, DESIGNATED FOR REMOVAL AND DISPOSAL, SHALL BE REMOVED FROM THE CONSTRUCTION SITE AND DISPOSED OF AT A LOCATION IN ACCORDANCE WITH APPLICABLE LOCAL, STATE, AND FEDERAL REGULATIONS.

16. REMOVAL, INCLUDING HAULING AND ANY DISPOSAL FEE OR CHARGE, SHALL BE CONSIDERED INCIDENTAL TO AND INCLUDED IN THE APPROPRIATE CONTRACT BID ITEM.

17. NO WORK SHALL BE DONE WITHOUT LINES AND GRADES HAVING BEEN PREVIOUSLY ESTABLISHED. WORK DONE CONTRARY TO THE DIRECTION OF THE SOCWA, WORK DONE BEYOND THE LINES AND GRADES SHOWN ON THE CONTRACT DRAWINGS OR AS OTHERWISE PROVIDED OR ANY EXTRA WORK DONE WITHOUT AUTHORITY, SHALL BE CONSIDERED AS UNAUTHORIZED AND SHALL NOT BE PAID FOR UNDER THE PROVISIONS OF THE CONTRACT. WORK SO DONE MAY BE ORDERED REMOVED OR REPLACED BY THE SOCWA AT NO ADDITIONAL COST TO THE SOCWA.

18. THE CONTRACTOR SHALL PERFORM EXCAVATION IN A SAFE CONDITION TO PREVENT DAMAGE TO ADJACENT PROPERTIES, STRUCTURES, OR UTILITY FACILITIES.

19. ALL NECESSARY EASEMENTS TO THE TEMPORARY WORK AREA (TWA) LIMITS SHOWN ON THE CONTRACT DRAWINGS HAVE BEEN IDENTIFIED AND ACQUIRED BY THE SOCWA. HOWEVER, IT IS THE CONTRACTOR'S RESPONSIBILITY TO COMPLY WITH ANY REQUIREMENTS OF AGREEMENTS OR DOCUMENTS ASSOCIATED WITH THESE EASEMENTS DURING CONSTRUCTION.

20. THE CULTURALLY SENSITIVE AREA IS LOCATED ON THE NORTH BANK OF SULPHUR CREEK AS INDICATED ON THE DRAWINGS. THE CONTRACTOR SHALL AVOID ANY IMPACTS TO THE SITE IF AT ALL POSSIBLE, UNLESS OTHERWISE NOTED ON THE DRAWINGS. THE CONTRACTOR SHALL COMPLY WITH ANY REGULATIONS AND REQUIREMENTS, ASSOCIATED WITH WORKING NEAR THIS CULTURALLY SENSITIVE SITE. ANY DAMAGES TO THE SITE, CAUSED BY THE CONSTRUCTION ACTIVITIES, SHALL BE RESTORED TO THE ORIGINAL CONDITIONS AT THE CONTRACTOR'S OWN EXPENSE.

21. THE CONTRACTOR SHALL REPLACE OR RELOCATE ANY SURVEY CONTROL WHICH IS DISPLACED OR DAMAGED DURING CONSTRUCTION, BASED ON THE ORIGINAL SURVEY CONTROL POINTS. IN ADDITION, THE CONTRACTOR SHALL COORDINATE WITH THE SOCWA TO SUBMIT FIELD NOTES SHOWING THE CHARACTER OF THE NEW POINTS AND METHODS OF ESTABLISHMENT OR RE-ESTABLISHMENT. THE CONTRACTOR SHALL NOT MAKE ANY CHANGES WITHOUT PRIOR APPROVAL FROM THE SOCWA.

22. THE CONTRACTOR SHALL RE-VEGETATE RIPARIAN AREAS, DISTURBED BY CONSTRUCTION ACTIVITIES, WITHIN THE TWA LIMITS TO THE ORIGINAL CONDITIONS.

UTILITIES AND EXISTING STRUCTURES

1. THE CONTRACTOR SHALL FIELD VERIFY LOCATIONS, ELEVATIONS, AND SIZES OF ALL EXISTING UTILITIES, INCLUDING BUT NOT LIMITED TO, STORM DRAINS, 36-INCH ETM PIPE, AND EX. RCB CULVERT UNDER ALICIA PKWY, PRIOR TO ANY CONSTRUCTION, WHICH MAY REQUIRE POTHOLING.

2. THE CONTRACTOR SHALL NOTIFY, IN WRITING, ALL UTILITY COMPANIES AND GOVERNMENT AGENCIES PRIOR TO EXCAVATION WORK AND CALL DIGALERT AT 1-800-227-2600 AT LEAST 48 HOURS IN ADVANCE OF ANY CONSTRUCTION WORK TO ALLOW UTILITY OPERATORS TO CHECK AND MARK LOCATIONS OF EXISTING FACILITIES.

3. THE CONTRACTOR SHALL FIELD VERIFY AND PROTECT ALL EXISTING UTILITIES, BOTH SHOWN AND NOT SHOWN ON THE CONTRACT DRAWINGS, UNLESS OTHERWISE NOTED. THE CONTRACTOR SHALL REPAIR ANY DAMAGE CAUSED BY THE CONTRACTOR'S CONSTRUCTION ACTIVITIES TO EX. UTILITIES AT NO ADDITIONAL COST TO THE SOCWA.

4. THE LOCATION AND ELEVATIONS OF EXISTING UTILITIES SHOWN ON THE CONTRACT DRAWINGS ARE BASED ON THE BEST AVAILABLE INFORMATION AND SURVEY OF VISIBLE FEATURES. UTILITY INFORMATION IS NOT INTENDED TO BE EXACT OR COMPLETE. NEITHER THE SOCWA NOR THE ENGINEER CAN GUARANTEE EITHER THE ACCURACY OR COMPLETENESS OF UTILITIES SHOWN. THE CONTRACTOR SHALL PROTECT UTILITIES NEAR CONSTRUCTION ACTIVITIES AND COORDINATE WITH UTILITY COMPANIES FOR REMOVAL OR RELOCATION OF INTERFERING FACILITIES. THE CONTRACTOR IS RESPONSIBLE FOR COMPARING THE CONTRACT DRAWINGS TO EXISTING CONDITIONS AND FOR VERIFYING ACTUAL FIELD CONDITIONS. IT SHALL BE THE CONTRACTOR'S SOLE RESPONSIBILITY TO PROTECT ALL EXISTING UTILITIES IN PLACE, UNLESS OTHERWISE NOTED OR SPECIFIED.

5. THESE CONTRACT DRAWINGS HAVE BEEN PREPARED BASED ON AN ABOVE-GROUND SURVEY. EXISTING UNDERGROUND UTILITIES SHOWN ARE BASED ON AS-BUILT INFORMATION PROVIDED BY THE OWNER. THE BEST EFFORT HAS BEEN MADE TO DEPICT THESE UTILITIES, BUT THESE LOCATIONS SHALL BE CONSIDERED APPROXIMATE. THERE MAY BE ADDITIONAL UNDERGROUND UTILITIES NOT SHOWN ON THIS PLAN SET. IT SHALL BE THE RESPONSIBILITY OF THE CONTRACTOR TO PROTECT IN PLACE AND VERIFY THE EXISTENCE AND LOCATION OF ALL UTILITIES INCLUDING USE OF PRIVATE UTILITY LOCATING SERVICE AND POTHOLING AS NECESSARY TO CONFIRM ALL UTILITIES PRIOR TO CONSTRUCTION.

6. THE SIZE, LOCATION AND TYPE OF ANY UNDERGROUND UTILITIES OR IMPROVEMENTS SHALL BE ACCURATELY NOTED AND PLACED ON RECORD DRAWINGS, KEPT BY THE CONTRACTOR, AND ISSUED TO THE SOCWA UPON COMPLETION OF THE PROJECT.

GEOTECHNICAL

1. THE REFERENCE REPORT FOR THIS PROJECT WAS PREPARED BY XXXX, DATED XXX, XXXX.

2. BORING LOGS ARE PRESENTED IN THE CONTRACT DRAWINGS FOR INFORMATIONAL PURPOSE. THE COMPLETE GEOTECHNICAL REPORT IS AVAILABLE FROM THE SOCWA.

3. NEITHER THE SOCWA NOR THE ENGINEER WARRANTS NOR GUARANTEES THE RESULTS OF ANY GEOTECHNICAL OR SUBSURFACE INVESTIGATIONS AS BEING REPRESENTATIVE OF THE SITE, BEYOND THE ACTUAL LOCATION OF THE TEST SPECIMEN(S) AND ASSUMES NO RESPONSIBILITY FOR THE MANNER IN WHICH THIS INFORMATION MAY BE USED OR THE CONCLUSIONS REACHED IN UTILIZING THE INFORMATION CONTAINED IN THE CONTRACT DOCUMENTS. FURTHER, NEITHER THE SOCWA NOR THE ENGINEER WARRANTS OR GUARANTEES THE CONCLUSIONS REACHED, RECOMMENDATIONS MADE OR TEST RESULTS PRESENTED AS PART OF THE GEOTECHNICAL OR SUBSURFACE INVESTIGATION AS BEING REPRESENTATIVE OF THE ENTIRE SITE. IT SHALL BE THE CONTRACTOR'S SOLE RESPONSIBILITY TO SUPPLEMENT ANY INFORMATION PROVIDED WITH ADDITIONAL SUBSURFACE INVESTIGATIONS AND TESTING, AT THEIR SOLE EXPENSE, IN ORDER TO ASSURE THE INFORMATION PROVIDED IN THE CONSTRUCTION DOCUMENTS IS REPRESENTATIVE OF THE CONDITIONS TO BE ENCOUNTERED WITHIN THE LIMITS OF THE PROJECT AT THE TIME OF CONSTRUCTION.

4. GEOTECHNICAL OR SUBSURFACE INFORMATION THAT IS INCLUDED WITH THE CONTRACT DRAWINGS IS PROVIDED FOR INFORMATIONAL PURPOSES ONLY AND IS NOT TO BE CONSIDERED A PART OF THE CONSTRUCTION DOCUMENTS OR CONTRACT.

5. UPON COMPLETION OF TRENCH BACKFILLING OR OTHER INDIVIDUAL ITEMS OF CONSTRUCTION, ALL SURPLUS MATERIALS AND EQUIPMENT NO LONGER NEEDED SHALL BE IMMEDIATELY REMOVED, LEAVING THE CONSTRUCTION SITE AND SURROUNDINGS FREE OF EQUIPMENT AND OBSTRUCTIONS AND CLEAN TO THE SATISFACTION OF THE SOCWA.

6. THE CONTRACTOR SHALL PLACE AND COMPACT ALL PROPOSED FILL TO A MINIMUM OF 95% OF THE MAXIMUM DRY DENSITY PER ASTM D 1557.

TRAFFIC CONTROL AND WORK AREA

1. TEMPORARY TRAFFIC CONTROL SHALL BE IN ACCORDANCE WITH CALIFORNIA MANUAL ON UNIFORM TRAFFIC CONTROL (MUTC 2012) UNLESS SPECIFIED OR DIRECTED OTHERWISE.

2. THE CONTRACTOR SHALL COORDINATE WITH AND MAINTAIN ACCESS FOR ALL AFFECTED UTILITY OWNERS.

3. THE CONTRACTOR SHALL CONFINE ALL CONSTRUCTION ACTIVITIES WITHIN THE LIMITS OF TEMPORARY WORK AREA LIMITS.

4. THE CONTRACTOR SHALL RESTORE ALL DISTURBED AREAS TO THE ORIGINAL CONDITIONS AT NO ADDITIONAL COST TO THE SOCWA AT THE END OF CONSTRUCTION.

5. THE CONTRACTOR SHALL BE IN CLOSE COORDINATION AT ALL TIME WITH THE STATE PARK AGENCY, SOCWA, AND COUNTY AGENCIES THAT ARE AFFECTED BY THE PROJECT, THROUGHOUT THE COURSE OF CONSTRUCTION TO BE IN ACCORDANCE WITH ANY REQUIREMENTS AND REGULATIONS OF THESE AGENCIES AND TO PROVIDE ACCESS FOR THE AGENCIES AT ALL TIMES.

DRAINAGE AND EROSION CONTROL

1. THE CONTRACTOR SHALL MAINTAIN ALL EROSION CONTROL AS REQUIRED THROUGHOUT CONSTRUCTION AND INSPECT EROSION CONTROLS ON A MINIMUM WEEKLY BASIS.

2. PRIOR TO THE BEGINNING OF ANY CONSTRUCTION PHASE THE CONTRACTOR SHALL INSPECT ALL EROSION CONTROL AND MAKE ANY REPAIRS REQUIRED AS WELL AS CONFIRM THE INSTALLATION OF ANY ADDITIONAL EROSION CONTROL WHICH IS SPECIFIC TO ANY CONSTRUCTION ACTIVITY.

3. THE CONTRACTOR'S STAGING AND STORAGE AREA SHALL CONFORM TO ALL EROSION CONTROL DETAILS AND SPECIFICATIONS. IF TEMPORARY DRAINAGE IS REQUIRED WITHIN THE STAGING AND STORAGE AREA, IT SHALL CONFORM TO ALL EROSION CONTROL SPECIFICATIONS AND DETAILS AND APPROVED BY THE SOCWA PRIOR TO INSTALLATION.

4. ALL SOILS STORED WITHIN THE CONTRACTOR STAGING AND STORAGE AREA SHALL BE SURROUNDED BY A SINGLE ROW OF STAKED HAY BALES AND COVERED TO PREVENT WIND EROSION.

ABBREVIATIONS

C.L	CONTROL LINE
E	EASTING
EG	EXISTING GRADE
EX	EXISTING
FG	FINISH GRADE
IN	INCH
INV	INVERT
LF	LINEAR FEET
N	NORTHING
PKWY	PARKWAY
RCB	REINFORCED CONCRETE BOX
RDWY	ROADWAY
S	SLOPE
SD	STORM DRAIN
SHT	SHEET
STA	STATION

TETRA TECH, INC.
17885 Von Karman Avenue, Suite 500
Irvine, CA 92614
Phone (949) 809-5000, FAX (949) 809-5003

SOUTH ORANGE COUNTY WASTEWATER AUTHORITY
SULPHUR CREEK CONFLUENCE STABILIZATION

DATE 01/24/13

GENERAL NOTES & ABBREVIATIONS

P:\Watr\T29884 Sulphur-Aliso Creeks Improvements\04_Design\02_T29884G002NTS.dwg 01/17/2013 14:31

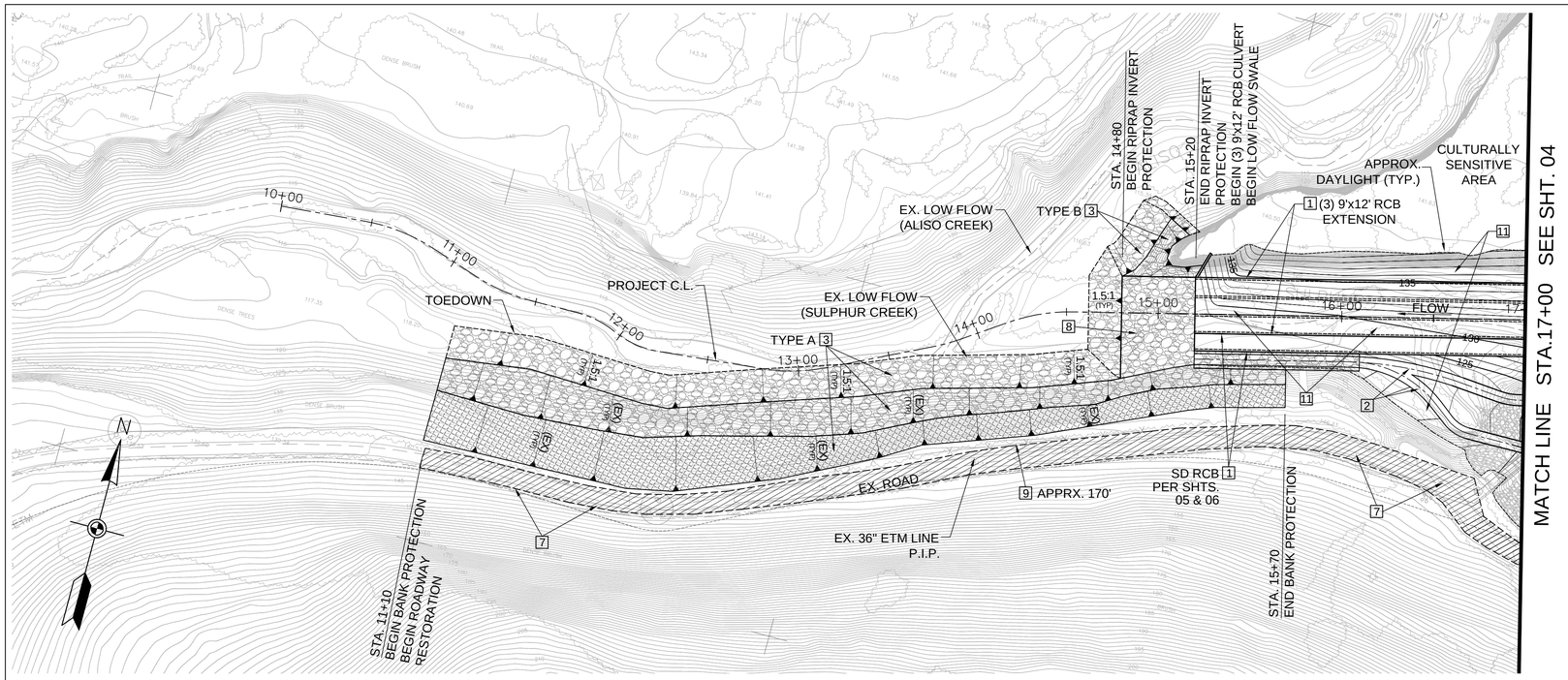

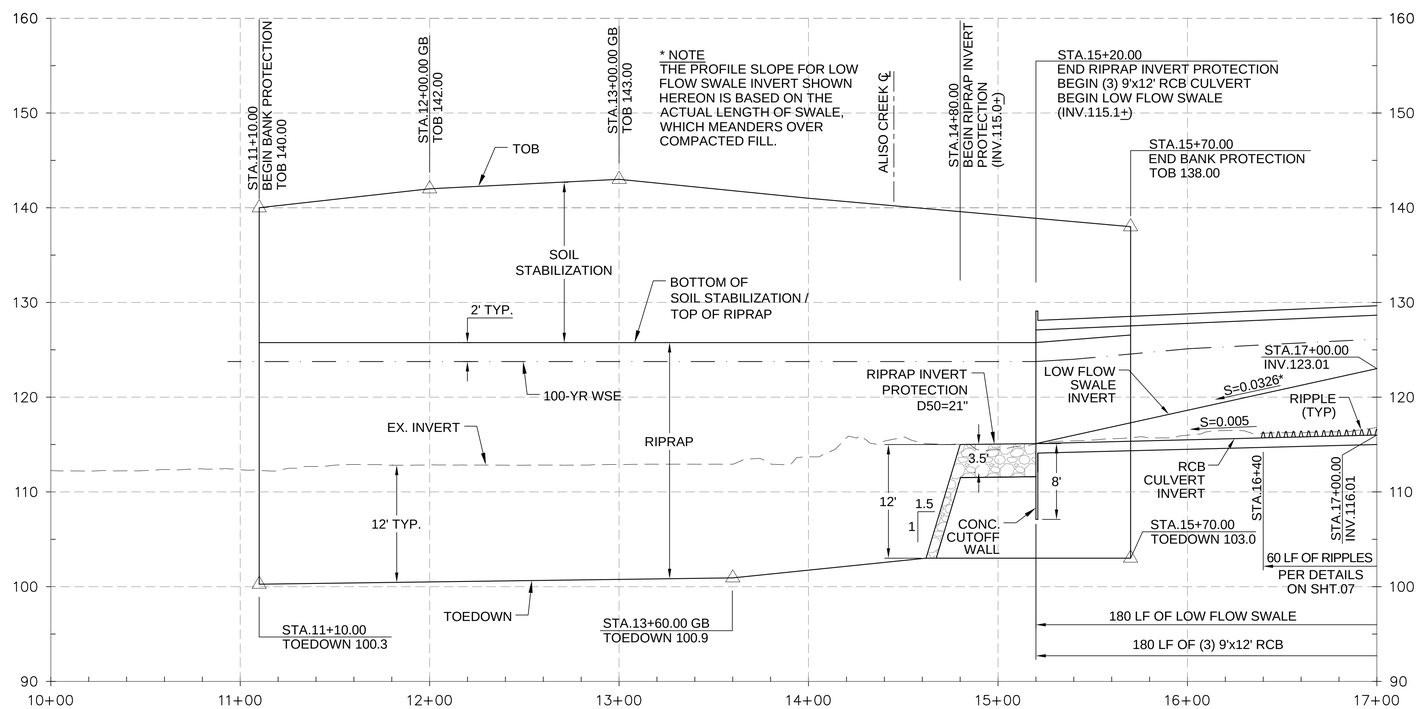

CONSTRUCTION NOTES

1. CONSTRUCT RCB CULVERT PER PLAN AND PROFILE HEREON, TYPICAL SECTIONS ON SHT. 07, AND CROSS SECTIONS ON SHT. 08.
2. CONSTRUCT LOW FLOW SWALE PER PLAN AND PROFILE HEREON, TYPICAL SECTIONS ON SHT. 07, AND CROSS SECTIONS ON SHT. 08.
3. CONSTRUCT BANK PROTECTION PER PLAN AND PROFILE HEREON AND TYPICAL SECTION ON SHT.07.
7. RESTORE EX. ROADWAY PER PLAN HEREON AND DETAILS ON SHT. 07.
8. CONSTRUCT RIPRAP INVERT PROTECTION PER PLAN HEREON.
9. REMOVE AND DISPOSE OF INTERFERING PORTION OF EX. FENCE AND RECONSTRUCT IT PER PLAN HEREON.
11. RE-VEGETATE NEWLY CREATED HABITAT WITHIN APPROX. DAYLIGHTS PER PLAN HEREON AND TYP. SECTION ON SHT.07.

NOTES

1. INFORMATION ON CONSTRUCTION OF SD RCB CULVERT, INCLUDING ITS PLAN AND PROFILE, IS PROVIDED ON SHTS. 05 AND 06.

0 40 80

TETRA TECH, INC.
17885 Von Karman Avenue, Suite 500
Irvine, CA 92614
Phone (949) 809-5000, FAX (949) 809-5003

SOUTH ORANGE COUNTY WASTEWATER AUTHORITY
SULPHUR CREEK CONFLUENCE STABILIZATION

DATE 01/24/13

PLAN AND PROFILE (1) - SULPHUR CREEK

SHT NO. 3 OF 8

P:\Wat\T29884 Sulphur-Aliso Creeks Improvements\04_Design\03_T29884CF101PLN.dwg 01/18/2013 14:08

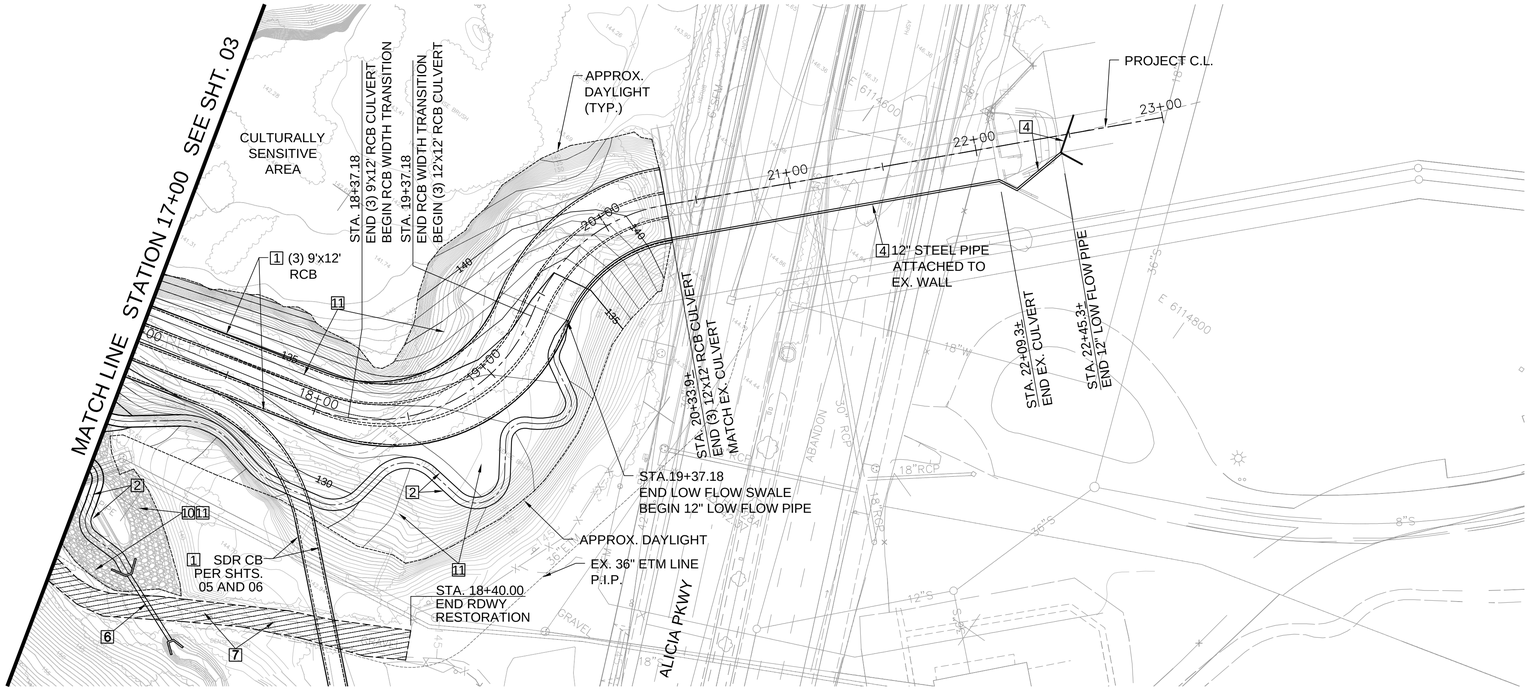

CONSTRUCTION NOTES

1. CONSTRUCT RCB CULVERT PER PLAN AND PROFILE HEREON, TYPICAL SECTIONS ON SHT. 07, AND CROSS SECTIONS ON SHT. 08.
2. CONSTRUCT LOW FLOW SWALE PER PLAN AND PROFILE HEREON, TYPICAL SECTIONS ON SHT. 07, AND CROSS SECTIONS ON SHT. 08.
4. CONSTRUCT 12" LOW FLOW PIPE SYSTEM, CAPTURING LOW FLOW UPSTREAM AND ROUTING IT THROUGH EX. RCB CULVERT TO NEW LOW FLOW SWALE DOWNSTREAM PER PLAN AND PROFILE HEREON.
6. CONSTRUCT BYPASS CULVERT WITH INLET AND OUTLET STRUCTURE UNDER EX. ROADWAY PER PLAN HEREON.
7. RESTORE EX. ROADWAY PER PLAN HEREON AND DETAILS ON SHT. 07.
10. REMOVE AND DISPOSE OF EXISTING GROUTED RIPRAP PLACEMENT PER PLAN.
11. RE-VEGETATE NEWLY CREATED HABITAT WITHIN APPROX. DAYLIGHTS PER PLAN HEREON AND TYP. SECTION ON SHT.07.

NOTES

1. INFORMATION ON CONSTRUCTION OF SD RCB CULVERT, INCLUDING ITS PLAN AND PROFILE, IS PROVIDED ON SHTS. 05 AND 06.

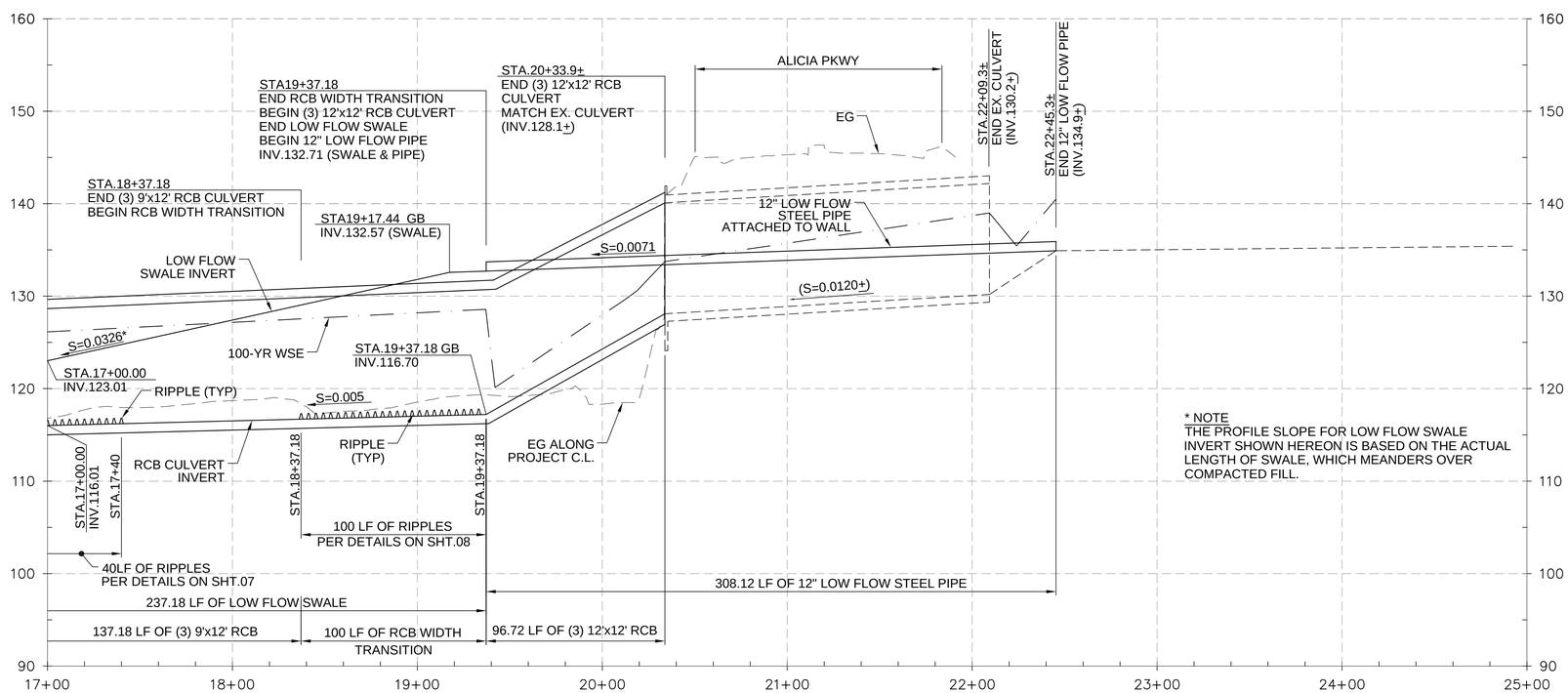

* NOTE
THE PROFILE SLOPE FOR LOW FLOW SWALE INVERT SHOWN HEREON IS BASED ON THE ACTUAL LENGTH OF SWALE, WHICH MEANDERS OVER COMPACTED FILL.

0 40 80

TETRA TECH, INC.
17885 Von Karman Avenue, Suite 500
Irvine, CA 92614
Phone (949) 809-5000, FAX (949) 809-5003

SOUTH ORANGE COUNTY WASTEWATER AUTHORITY
SULPHUR CREEK CONFLUENCE STABILIZATION

DATE 01/24/13

PLAN AND PROFILE (2) - SULPHUR CREEK

SHT NO. 4 OF 8

P:\Wat\T29884 Sulphur-Aliso Creeks Improvements\04_Design\04_T29884CF102PLN.dwg 01/18/2013 14:21

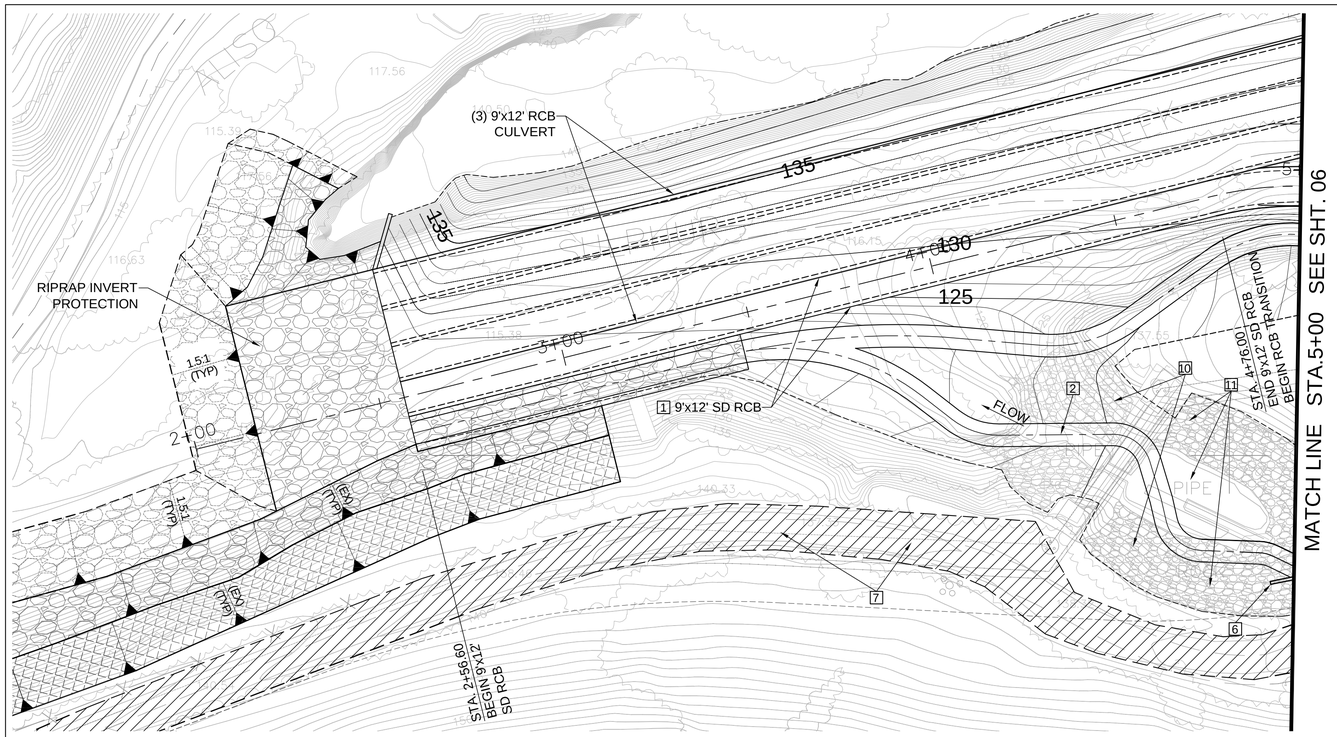

CONSTRUCTION NOTES

1. CONSTRUCT RCB CULVERT PER PLAN AND PROFILE HEREON, TYPICAL SECTIONS ON SHT. 07., AND CROSS SECTIONS ON SHT. 08.
2. CONSTRUCT LOW FLOW SWALE PER PLAN AND PROFILE HEREON, TYPICAL SECTIONS ON SHT. 07., AND CROSS SECTIONS ON SHT. 08.
6. CONSTRUCT BYPASS CULVERT WITH INLET AND OUTLET STRUCTURE UNDER EX. ROADWAY PER PLAN.
7. RESTORE EX. ROADWAY PER PLAN HEREON AND DETAILS ON SHT. 07.
10. REMOVE AND DISPOSE OF EXISTING GROUTED RIPRAP PLACEMENT PER PLAN.
11. RE-VEGETATE NEWLY CREATED HABITAT WITHIN APPROX. DAYLIGHTS PER PLAN HEREON AND TYP. SECTION ON SHT.07.

NOTES

1. INFORMATION ON CONSTRUCTION OF (3) 9'x12' RCB CULVERT, LOW FLOW SWALE, BANK PROTECTION, RIPRAP INVERT PROTECTION AND ROADWAY RESTORATION IS PROVIDED ON SHTS. 03 AND 04.

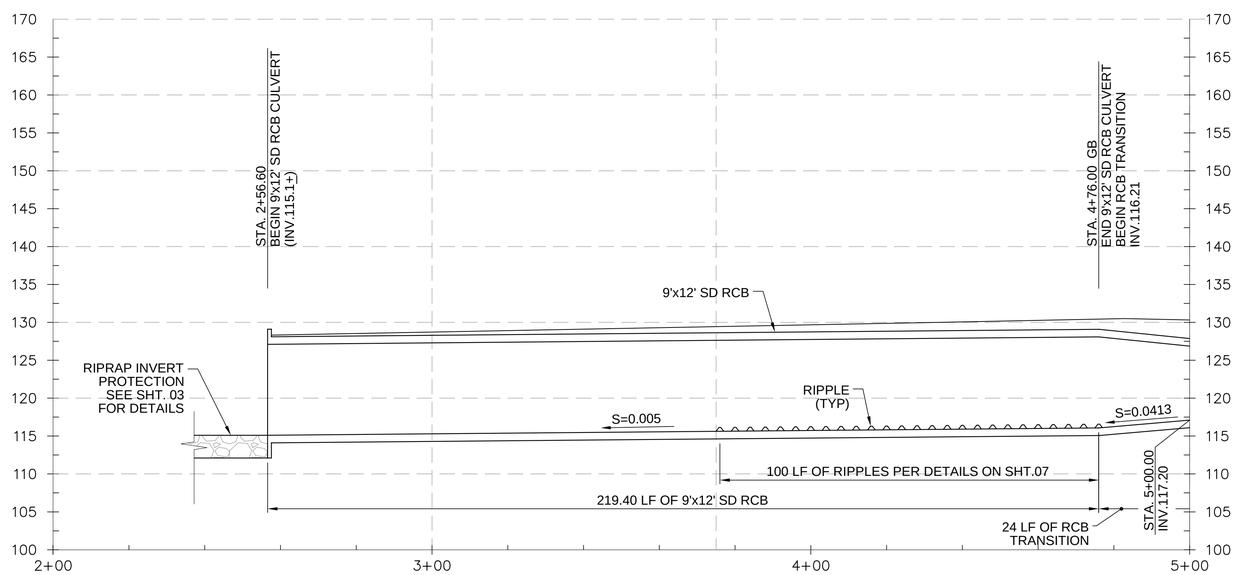

0 20 40

TETRA TECH, INC.
17885 Von Karman Avenue, Suite 500
Irvine, CA 92614
Phone (949) 809-5000, FAX (949) 809-5003

SOUTH ORANGE COUNTY WASTEWATER AUTHORITY
SULPHUR CREEK CONFLUENCE STABILIZATION

DATE 01/24/13

PLAN AND PROFILE (1) - SD RCB

SHT NO. 5 OF 8

P:\Wstr\T29884 Sulphur-Aliso Creeks Improvements\04_Design\05_T29884CF103PLN.dwg 01/18/2013 14:29

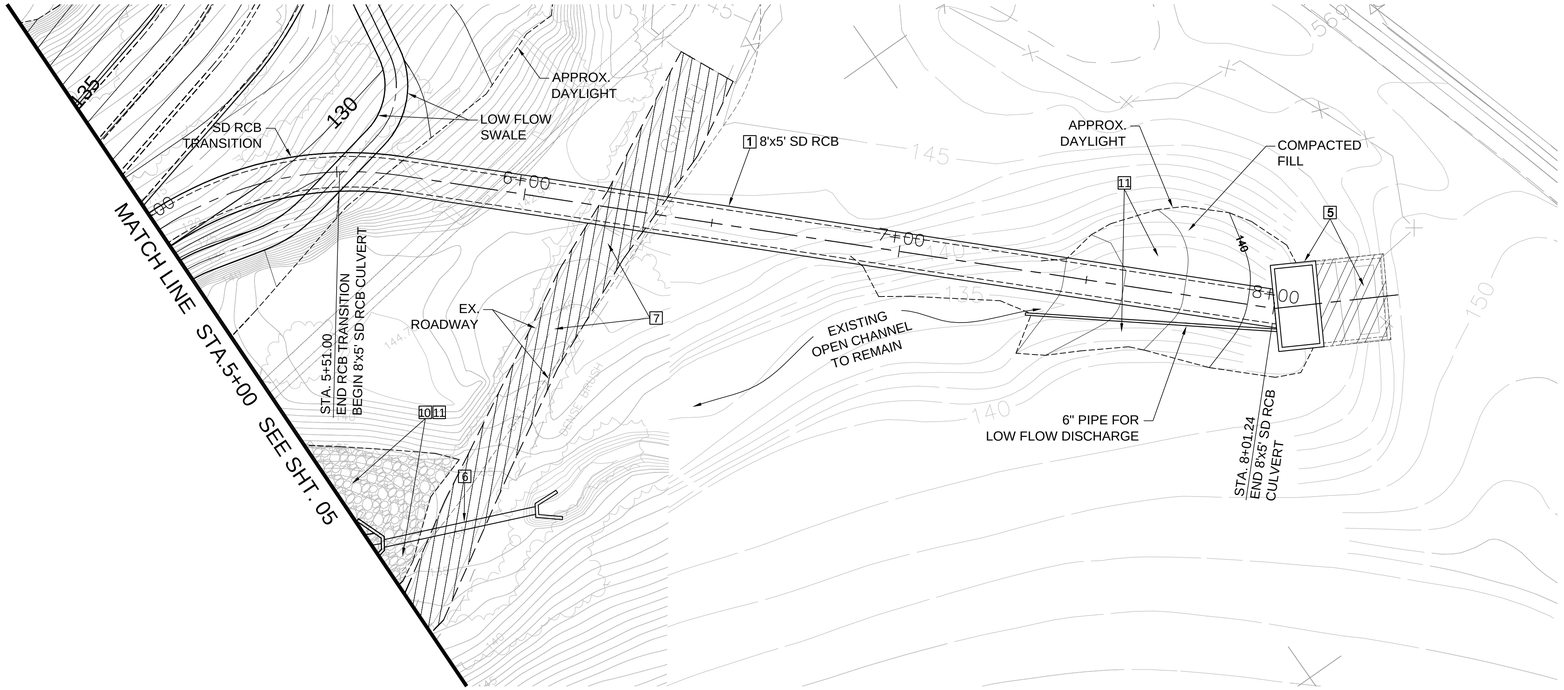

CONSTRUCTION NOTES

1. CONSTRUCT RCB CULVERT PER PLAN AND PROFILE HEREON, TYPICAL SECTIONS ON SHT. 07., AND CROSS SECTIONS ON SHT. 08.
2. CONSTRUCT LOW FLOW SWALE PER PLAN AND PROFILE HEREON, TYPICAL SECTIONS ON SHT. 07., AND CROSS SECTIONS ON SHT. 08.
5. REPLACE EX. SD OUTLET STRUCTURE W/ NEW STRUCTURE PER PLAN HEREON.
6. CONSTRUCT BYPASS CULVERT WITH INLET AND OUTLET STRUCTURE UNDER EX. ROADWAY PER PLAN.
7. RESTORE EX. ROADWAY PER PLAN HEREON AND DETAILS ON SHT. 07.
10. REMOVE AND DISPOSE OF EXISTING GROUTED RIPRAP PLACEMENT PER PLAN.
11. RE-VEGETATE NEWLY CREATED HABITAT WITHIN APPROX. DAYLIGHTS PER PLAN HEREON AND TYP. SECTION ON SHT.07.

NOTES

1. INFORMATION ON CONSTRUCTION OF (3) 9'x12' RCB CULVERT, LOW FLOW SWALE, BANK PROTECTION, RIPRAP INVERT PROTECTION AND ROADWAY RESTORATION IS PROVIDED ON SHTS. 03 AND 04.

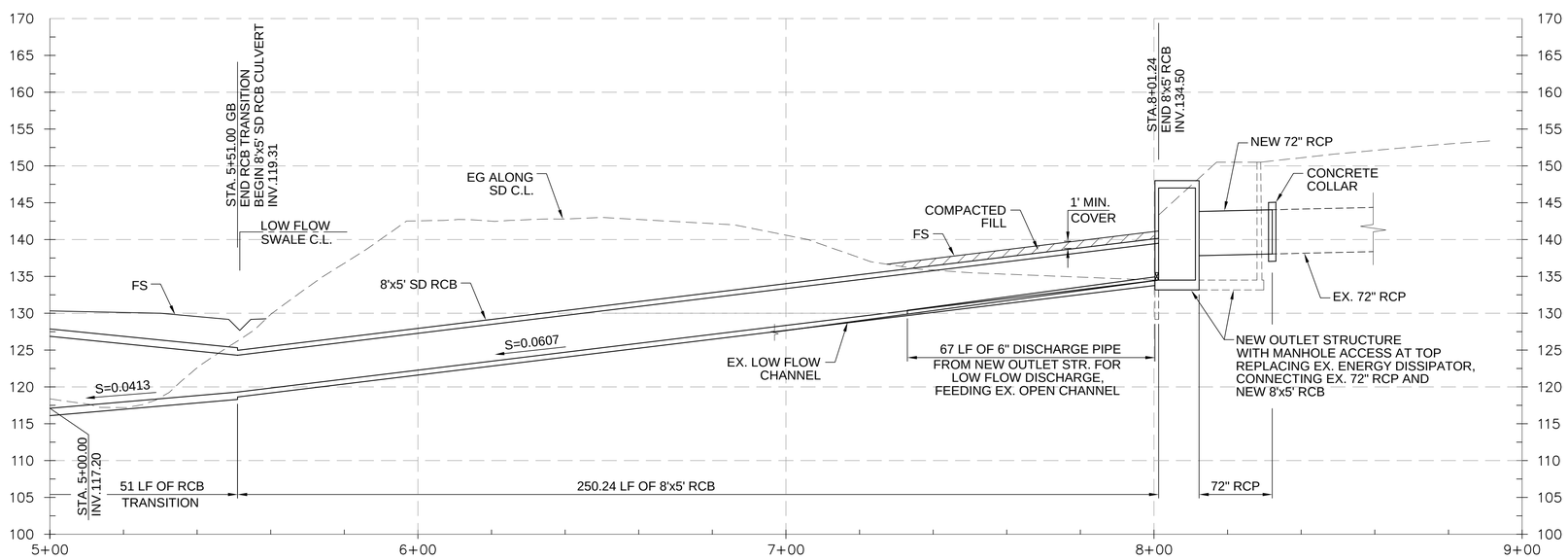

0 20 40

TETRA TECH, INC.
17885 Von Karman Avenue, Suite 500
Irvine, CA 92614
Phone (949) 809-5000, FAX (949) 809-5003

SOUTH ORANGE COUNTY WASTEWATER AUTHORITY
SULPHUR CREEK CONFLUENCE STABILIZATION

DATE 01/24/13

PLAN AND PROFILE (2) - SD RCB

SHT NO. 6 OF 8

P:\Wstr\T29884 Sulphur-Aliso Creeks Improvements\04_Design\06_T29884CF104PLN.dwg 01/18/2013 14:36

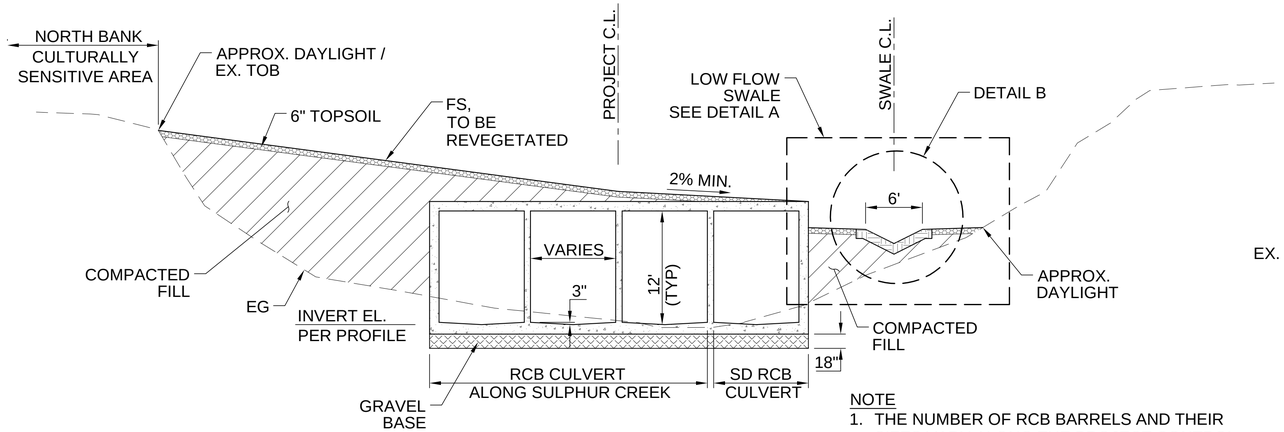

TYPICAL SECTION - RCB CULVERT

N.T.S

NOTE

1. THE NUMBER OF RCB BARRELS AND THEIR SIZES VARY ALONG THE PROJECT CONTROL LINE, PER PLAN AND PROFILE.

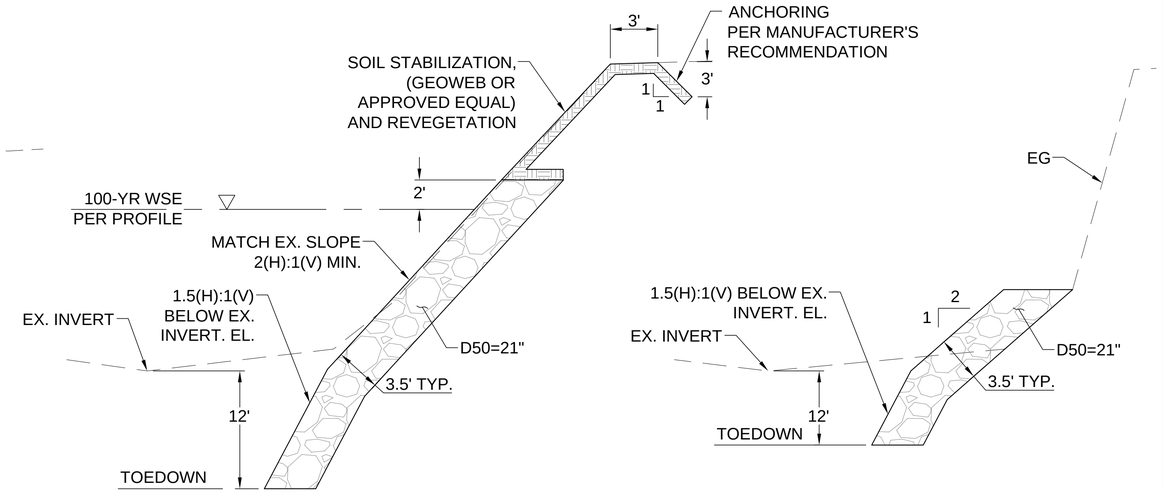

TYPE A

TYPE B

TYPICAL SECTION - BANK STABILIZATION

N.T.S

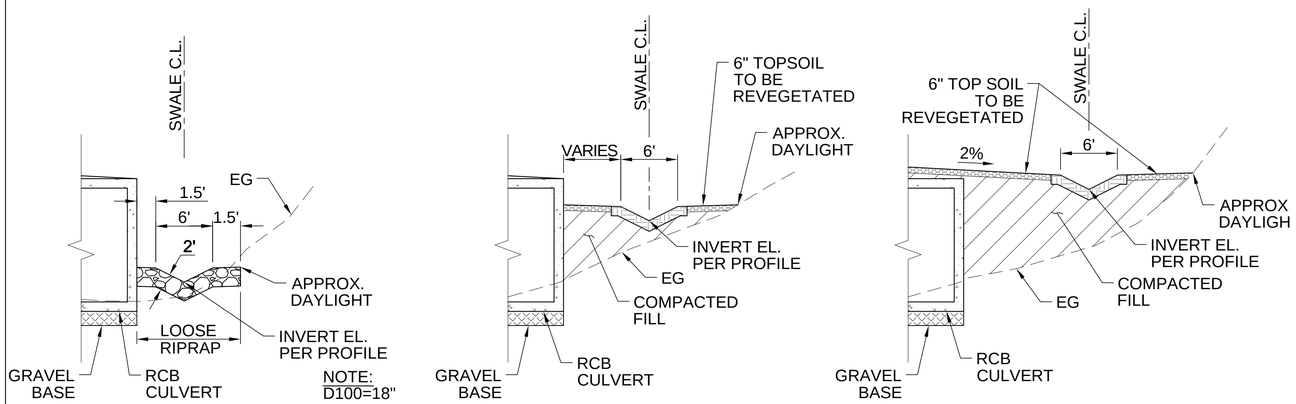

FROM STA. 15+20.00 TO STA. 16+10.00

FROM STA. 16+10.00 TO STA. 18+10.00

FROM STA. 18+10.00 TO STA. 19+42.44

DETAIL A - LOW FLOW SWALE

N.T.S

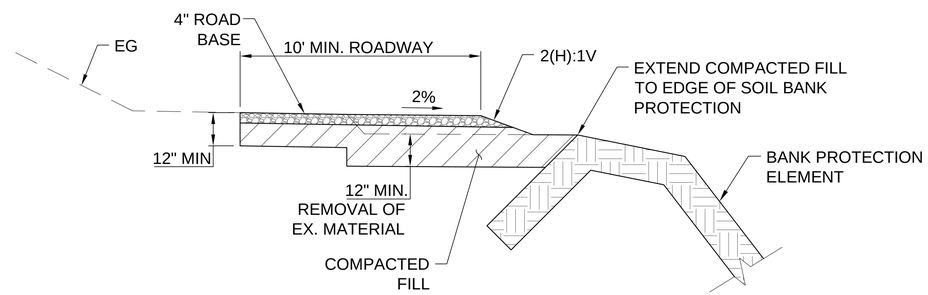

ROADWAY RESTORATION DETAIL

N.T.S

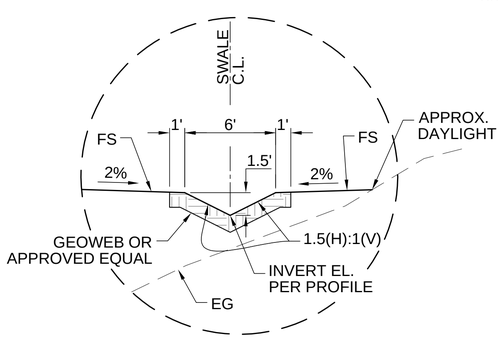

DETAIL B - LOW FLOW SWALE

N.T.S

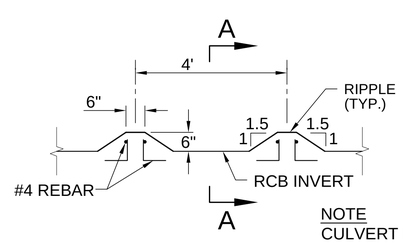

NOTE

CULVERT REINFORCING NOT SHOWN FOR CLARITY.

TYPICAL RCB RIPPLE - PROFILE

N.T.S

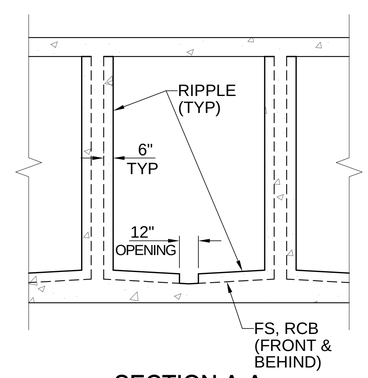

SECTION A-A

N.T.S

TETRA TECH, INC.
17885 Von Karman Avenue, Suite 500
Irvine, CA 92614
Phone (949) 809-5000, FAX (949) 809-5003

SOUTH ORANGE COUNTY WASTEWATER AUTHORITY
SULPHUR CREEK CONFLUENCE STABILIZATION

DATE 01/24/13

TYPICAL SECTIONS

SHT NO. 7 OF 8

P:\Water\T29884 Sulphur-Aliso Creeks Improvements\04_Design\07_T29884CF301TYP.dwg 01/18/2013 14:58

NOTES

1. CROSS SECTIONS ARE LOOKING IN UPSTREAM DIRECTION.

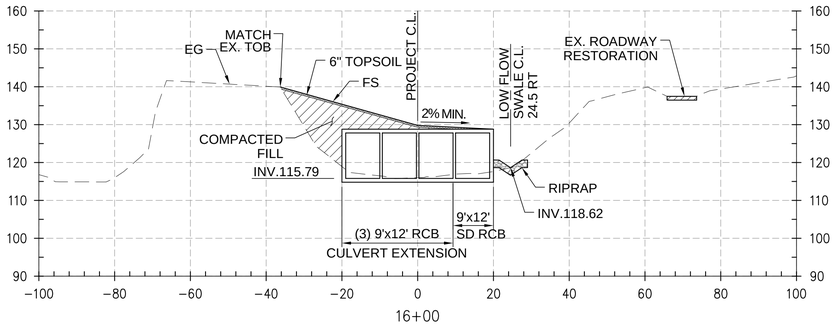

16+00

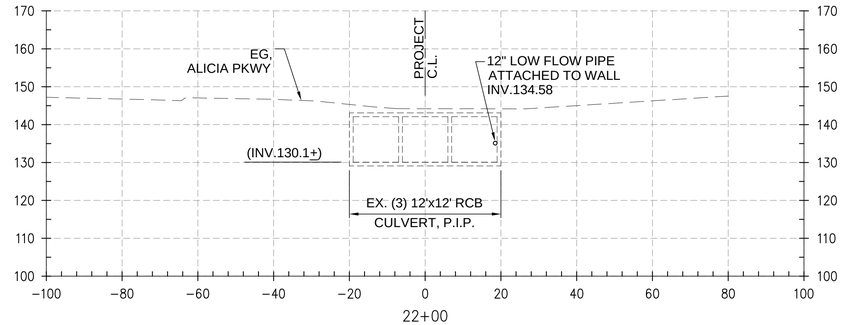

22+00

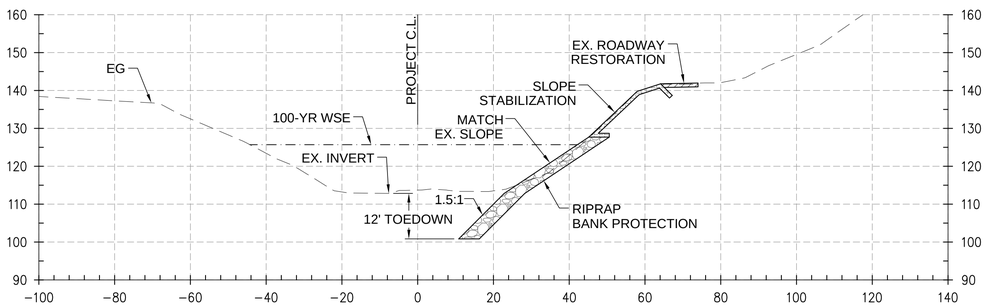

14+00

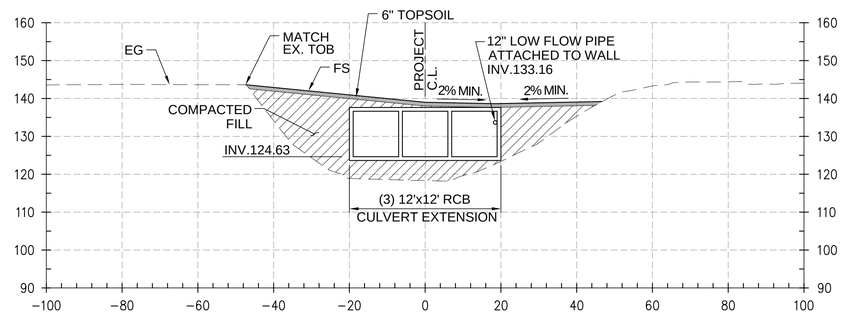

20+00

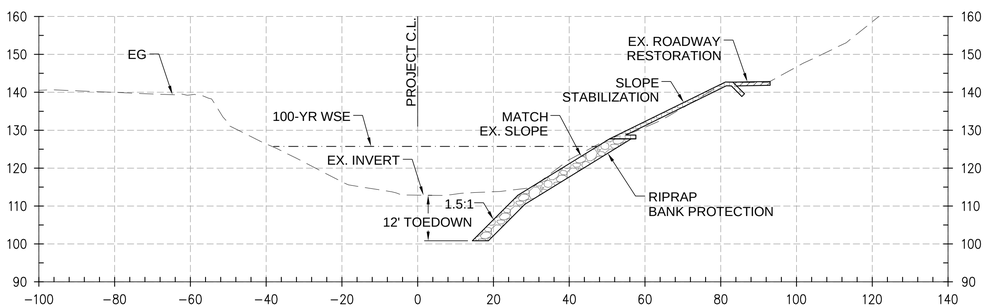

12+00

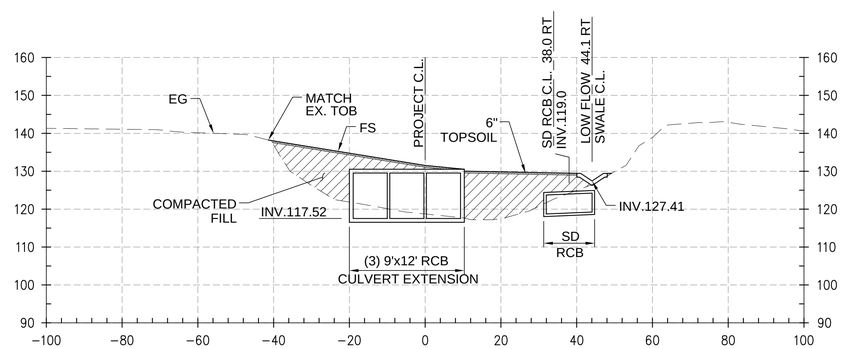

18+00

0 40 80

TETRA TECH, INC.
17885 Von Karman Avenue, Suite 500
Irvine, CA 92614
Phone (949) 809-5000, FAX (949) 809-5003

SOUTH ORANGE COUNTY WASTEWATER AUTHORITY
SULPHUR CREEK CONFLUENCE STABILIZATION

CROSS SECTIONS

DATE 01/24/13

SHT NO. 8 OF 8

P:\Wat\T29884 Sulphur-Aliso Creeks Improvements\04_Design\08_T29884CF5011XSC.dwg 01/18/2013 15:05

Appendix C
Scour Analysis
and
CHANLPRO Output Printouts

This page intentionally left blank

Aliso Creek Streambed Scour Analysis

General Scour							
$z_{gs} = y_{max}\ [(0.0685\ V^{0.8})/(y^{0.4}_{h} S^{0.3}_{e})-1]$							
				value			
z_{gs} = general scour, ft				0.48			
V = flow velocity, ft/sec				12.33			
y_{max} = maximum flow depth, ft				12.92			
y_h= hydraulic flow depth, ft				8.46			
S_e = energy slope, ft/ft				0.005475			
Bedform Scour							
Antidunes, $z_a = 0.0137\ V_m^2$							
V_m	12.33						
Z_a	2.08						
Bend Scour							
Zeller (1981)							
$z_{bc} = 0.0685\ (d_m V^{0.8}_{m})/(y^{0.4}_{h} S^{0.3}_{e})[2.1(\sin^2(\alpha/2)/\cos(\alpha))^{0.2}-1]$							
							value
z_{bc} = bend scour, ft							4.47
d_m = maximum flow depth immediately upstream of bend, ft							12.92
V_m = maximum velocity immediately upstream of bend, ft/sec							12.33
y_h = maximum hydraulic depth immediately upstream of bend, ft							8.46
S_e = maximum energy slope immediately upstream of bend, ft/ft							0.005475
α = angle of attack, degree							34

Sulphur Creek and Aliso Creek Confluence

Aliso Creek Riprap Analysis

PROGRAM OUTPUT FOR A NATURAL CHANNEL SIDE SLOPE RIPRAP, STRAIGHT REACH

INPUT PARAMETERS

SPECIFIC WEIGHT OF STONE,PCF	165.0
LOCAL FLOW DEPTH,FT	12.9
CHANNEL SIDE SLOPE,1 VER: 1.50 HORZ	
AVERAGE CHANNEL VELOCITY,FPS	12.33
COMPUTED LOCAL DEPTH AVG VEL,FPS	12.33
(LOCAL VELOCITY)/(AVG CHANNEL VEL)	1.00
SIDE SLOPE CORRECTION FACTOR K1	.71
CORRECTION FOR VELOCITY PROFILE IN BEND	1.00
RIPRAP DESIGN SAFETY FACTOR	1.50

SELECTED STABLE GRADATIONS

ETL GRADATION

NAME	COMPUTED D30(MIN) D30 FT	D100(MAX) FT	D85/D15 IN	N=THICKNESS/ D100(MAX)	CT	THICKNESS IN
7		1.10	27.00	1.70	NOT STABLE	
8	1.22	1.22	30.00	1.70	1.47	.90	44.1
9	1.34	1.34	33.00	1.70	1.05	.99	34.7
10	1.36	1.46	36.00	1.70	1.00	1.00	36.0

D100(MAX) IN	LIMITS OF STONE WEIGHT,LB FOR PERCENT LIGHTER BY WEIGHT 100			50			15	D30(MIN) FT	D90(MIN) FT
30.00	1350	540	400	270	200	84		1.22	1.77
33.00	1797	719	532	359	266	112		1.34	1.94
36.00	2333	933	690	467	345	146		1.46	2.11

EQUIVALENT SPHERICAL DIAMETERS IN INCHES

D100(MAX)	D100(MIN)	D50(MAX)	D50(MIN)	D15(MAX)	D15(MIN)
30.0	22.1	20.0	17.5	15.9	11.9
33.0	24.3	22.0	19.3	17.5	13.1
36.0	26.5	24.0	21.1	19.0	14.3

Aliso Creek and Sulphur Creek Confluence - Bended Segment
Aliso Creek at 4.854

PROGRAM OUTPUT FOR A CHANNEL WITH A KNOWN LOCAL
DEPTH AVERAGED VELOCITY, BENDWAY

INPUT PARAMETERS

SPECIFIC WEIGHT OF STONE,PCF	165.0
MINIMUM CENTER LINE BEND RADIUS,FT	500.0
WATER SURFACE WIDTH,FT	69.4
LOCAL FLOW DEPTH,FT	12.9
CHANNEL SIDE SLOPE,1 VER: 1.50 HORZ	
LOCAL DEPTH AVG VELOCITY,FPS	12.33
SIDE SLOPE CORRECTION FACTOR K1	.71
CORRECTION FOR VELOCITY PROFILE IN BEND	1.11
RIPRAP DESIGN SAFETY FACTOR	1.50

SELECTED STABLE GRADATIONS
ETL GRADATION

NAME	COMPUTED D30(MIN) D30 FT	D100(MAX) FT	D85/D15 IN	N=THICKNESS/ D100(MAX)	CT	THICKNESS IN
8		1.22	30.00	1.70	NOT STABLE	
9	1.34	1.34	33.00	1.70	1.53	.89	50.7
10	1.46	1.46	36.00	1.70	1.13	.97	40.8
11	1.51	1.70	42.00	1.70	1.00	1.00	42.0

D100(MAX) IN	LIMITS OF STONE WEIGHT,LB FOR PERCENT LIGHTER BY WEIGHT 100			50			15	D30(MIN) FT	D90(MIN) FT
33.00	1797	719	532	359	266	112		1.34	1.94
36.00	2333	933	690	467	345	146		1.46	2.11
42.00	3704	1482	1096	741	548	232		1.70	2.47

EQUIVALENT SPHERICAL DIAMETERS IN INCHES

D100(MAX)	D100(MIN)	D50(MAX)	D50(MIN)	D15(MAX)	D15(MIN)
33.0	24.3	22.0	19.3	17.5	13.1
36.0	26.5	24.0	21.1	19.0	14.3
42.0	30.9	28.0	24.6	22.2	16.7

(pressure plus momentum, P+M) method if the incremental increase in flow is more than 10 percent of the flow in the main channel or if the incremental increase, regardless of magnitude, could adversely affect the system. Structures flowing at slightly supercritical velocities are especially susceptible to adverse affects from side inflows.

The P+M method used for district projects (based on Newton's second law of motion) has been expanded from the Corps of Engineers open channel analysis[7] to include all junctions.

The general equilibrium equation is:

$$P_2 + M_2 = P_1 + M_1 + M_3 \cos \theta + P_i + P_w - P_f$$

Where P_1 = hydrostatic pressure on section 1

P_2 = hydrostatic pressure on section 2

P_i = horizontal component of hydrostatic pressure on invert

P_s = horizontal component of hydrostatic pressure on soffit

P_w = axial component of hydrostatic pressure on walls

P_f = retardation force of friction

M_1 = momentum of moving mass of water entering junction at section 1

M_2 = momentum of moving mass of water leaving junction at section 2

$M_3 \cos \theta$ = axial component of momentum of the moving mass of water entering the junction at section 3

CONFLUENCES

OPEN RECTANGULAR CHANNEL

$b_2 \geq b_1$

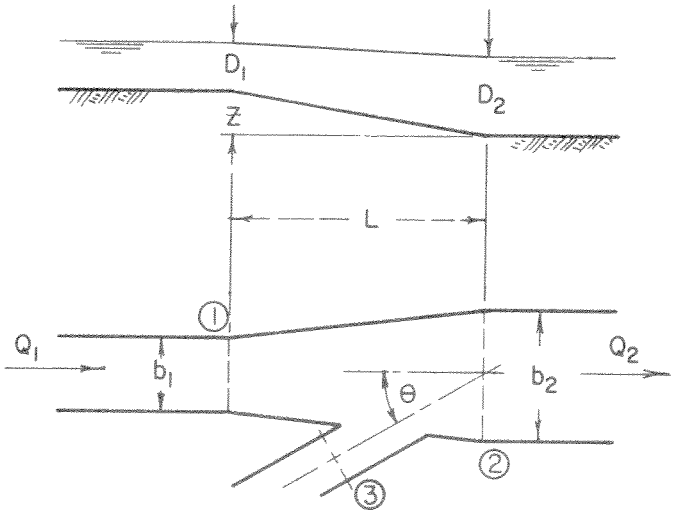

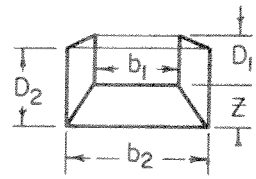

$$P_1 = \frac{b_1 D_1^2}{2} \qquad P_2 = \frac{b_2 D_2^2}{2}$$

$$M_1 = \frac{Q_1^2}{b_1 D_1 g} \qquad M_2 = \frac{Q_2^2}{b_2 D_2 g}$$

$$M_3 \cos\theta = \frac{(Q_2 - Q_1)^2}{A_3 g}(\cos\theta)$$

Where A_3 = water area at section 3

$$P_i = \left(\frac{b_1 + b_2}{2}\right) Z \left[D_1 + \frac{(D_2 - D_1)(b_1 + 2b_2)}{3(b_1 + b_2)}\right]$$

$$P_w = \frac{D_1 + D_2}{4}(b_2 - b_1)\left[D_1 + \frac{(D_2 - D_1)(D_1 + 2D_2)}{3(D_1 + D_2)}\right]$$

$$P_f = \frac{L(s_1 + s_2)}{4}(b_1 D_1 + b_2 D_2)$$

$P_2 + M_2 = P_1 + M_1 + M_3 \cos\Theta + P_i + P_w - P_f$						
$P_1 = b_1 D_1^2/2$						
$M_1 = Q_1^2/(b_1 D_1 g)$						
$P_2 = b_2 D_2^2/2$						
$M_2 = Q_1^2/(b_2 D_2 g)$						
$M_3 \cos\Theta = (Q_2 - Q_1)^2 \cos\Theta/(A_3 g)$						
$P_i = (b_1 + b_2)/2 * Z * [D_1 + (D_2 - D_1)(b_1 + 2b_2)/(3(b_1 + b_2))]$						
$P_w = (D_1 + D_2)/4 * (b_2 - b_1)[D_1 + (D_2 - D_1)(D_1 + 2D_2)/(3(D_1 + D_2))]$						
$P_f = L(s_1 + s_2)/4 * (b_1 D_1 + b_2 D_2)$						
b_1	27					
D_1	7.51					
Q_1	3150					
P_1	761.4014					
M_1	1519.713					
b_2	38					
D_2	8.93	V_2	13.15			
Q_2	4460					
P_2	1513.622					
M_2	1821.371					
b_3	9					
D_3	8.7					
A_3	78.3					
Θ	0					
$M_3 \cos\Theta$	680.6517					
Z	0					
L	0					
g	32.2					
P_i	0					
P_w	373.2266					
P_f	0					
$P_2 + M_2 - (P_1 + M_1 + M_3 \cos\Theta + P_i + P_w - P_f) =$				7.47E-06		
Reference: Orange County Flood Control District, Design Manual, 2000						

Sulphur Creek Invert Protection Analysis

Sulphur Creek Outlet Riprap Analysis

PROGRAM OUTPUT FOR A TRAPEZOIDAL CHANNEL INVERT, STRAIGHT REACH
STRAIGHT REACH IS > 5 WS WIDTHS DS OF ANYTHING CAUSING A FLOW IMBALANCE

INPUT PARAMETERS

SPECIFIC WEIGHT OF STONE,PCF	165.0
LOCAL FLOW DEPTH,FT	8.9
CHANNEL SIDE SLOPE,1 VER: 2.00 HORZ	
AVERAGE CHANNEL VELOCITY,FPS	13.15
COMPUTED LOCAL DEPTH AVG VEL,FPS	15.12
(LOCAL VELOCITY)/(AVG CHANNEL VEL)	1.15
BOTTOM WIDTH,FT TRAP SECT	38.00
MAXIMUM FLOW DEPTH,FT TRAP SECT	8.93
SIDE SLOPE CORRECTION FACTOR K1	1.00
CORRECTION FOR VELOCITY PROFILE IN BEND	1.00
RIPRAP DESIGN SAFETY FACTOR	1.30

SELECTED STABLE GRADATIONS
ETL GRADATION

NAME	COMPUTED D30(MIN) D30 FT	D100(MAX) FT	D85/D15 IN	N=THICKNESS/ D100(MAX)	CT	THICKNESS IN
7		1.10	27.00	1.70	NOT STABLE	
8	1.22	1.22	30.00	1.70	1.68	.87	50.3
9	1.34	1.34	33.00	1.70	1.19	.95	39.4
10	1.41	1.46	36.00	1.70	1.00	1.00	36.0

D100(MAX) IN	LIMITS OF STONE WEIGHT,LB FOR PERCENT LIGHTER BY WEIGHT 100			50		15	D30(MIN) FT	D90(MIN) FT
30.00	1350	540	400	270	200	84	1.22	1.77
33.00	1797	719	532	359	266	112	1.34	1.94
36.00	2333	933	690	467	345	146	1.46	2.11

EQUIVALENT SPHERICAL DIAMETERS IN INCHES

D100(MAX)	D100(MIN)	D50(MAX)	D50(MIN)	D15(MAX)	D15(MIN)
30.0	22.1	20.0	17.5	15.9	11.9
33.0	24.3	22.0	19.3	17.5	13.1
36.0	26.5	24.0	21.1	19.0	14.3

Sulphur Creek Outlet Riprap

PROGRAM OUTPUT FOR A NATURAL CHANNEL SIDE SLOPE RIPRAP, STRAIGHT REACH

INPUT PARAMETERS

SPECIFIC WEIGHT OF STONE,PCF	165.0
LOCAL FLOW DEPTH,FT	7.1
CHANNEL SIDE SLOPE,1 VER: 2.00 HORZ	
AVERAGE CHANNEL VELOCITY,FPS	13.15
COMPUTED LOCAL DEPTH AVG VEL,FPS	13.15
(LOCAL VELOCITY)/(AVG CHANNEL VEL)	1.00
SIDE SLOPE CORRECTION FACTOR K1	.88
CORRECTION FOR VELOCITY PROFILE IN BEND	1.00
RIPRAP DESIGN SAFETY FACTOR	1.10

SELECTED STABLE GRADATIONS

ETL GRADATION

NAME	COMPUTED D30(MIN) D30 FT	D100(MAX) FT	D85/D15 IN	N=THICKNESS/ D100(MAX)	CT	THICKNESS IN
5	.85	21.00	1.70	NOT STABLE		
6	.97	.97	24.00	1.70	1.33	.92	31.8
7	1.05	1.10	27.00	1.70	1.00	1.00	27.0

D100(MAX) IN	LIMITS OF STONE WEIGHT,LB FOR PERCENT LIGHTER BY WEIGHT 100			50		15	D30(MIN) FT	D90(MIN) FT
24.00	691	276	205	138	102	43	.97	1.40
27.00	984	394	291	197	146	62	1.10	1.59

EQUIVALENT SPHERICAL DIAMETERS IN INCHES

D100(MAX)	D100(MIN)	D50(MAX)	D50(MIN)	D15(MAX)	D15(MIN)
24.0	17.7	16.0	14.0	12.7	9.5
27.0	19.9	18.0	15.8	14.3	10.7

Appendix D
Cost Estimates

This page intentionally left blank

COST ESTIMATE

Project ID: **T 29884**
Project Title: Sulphur Creek Improvement
Date: **1/21/13**

Table 4.1 – Cost Estimate for 35% Level Design (RCB Culvert Extension w/ Low Flow Swale)

	Contract Items	Unit	Quantity	Unit Cost	Total Cost
1.0	Mobilization	LS	1	$ 210,000.00	$210,000
2.0	Clearing and Grubbing	Acre	3.20	$ 7,500.00	$24,000
3.0	Existing Grouted Riprap Removal	LS	1.00	$ 90,000.00	$90,000
4.0	RCB Culvert Extension				
4.1	Excavation	CY	1,901	$ 17.50	$33,300
4.2	Compacted Fill	CY	9,430	$ 40.00	$377,200
4.3	Topsoil	CY	955	$ 40.00	$38,200
4.4	RCB Culvert Extension	LF	514	$ 4,430.00	$2,277,100
4.5	Riprap Invert Protection (at Downstream End)	CY	420	$ 100.00	$42,000
5.0	Storm Drain (J03P02) Improvement				
5.1	Storm Drain Outlet Structure Replacement	LS	1	$ 20,000.00	$20,000
5.2	Excavation	CY	3,180	$ 17.50	$55,700
5.3	Compacted Fill	CY	2,693	$ 27.25	$73,400
5.4	SD RCB Culvert	LF	545	$ 1,040.00	$566,800
5.5	6" Low Flow Pipe	LF	67	$ 21.25	$1,500
5.6	Bypass Culvert under Dip Crossing w/ Headwalls	LS	1	$ 7,500.00	$7,500
6.0	Low Flow Swale				
6.1	Geoweb or Approved Equal (along Sulphur Creek)	SY	522	$ 10.75	$5,700
6.2	Geoweb or Approved Equal (D/S of J03P02)	SY	166	$ 10.75	$1,800
6.3	Riprap Protection (at Downstream End)	CY	65	$ 120.00	$7,800
6.4	Low Flow Capturing System	LS	1	$ 5,000.00	$5,000
6.5	12" Bypass Pipe	LF	308	$ 205.00	$63,200
7.0	Bank Protection (South Bank D/S of RCB)				
7.1	Riprap (Lower Elevation)	CY	2,030	$ 100.00	$203,000
7.2	Soil Stabilization (Upper Elevation)	SY	1,480	$ 10.75	$16,000
8.0	Bank Protection (Confluence Wrap-around)				
8.1	Riprap	CY	1,600	$ 100.00	$160,000
9.0	Roadway Restoration	CY	711	$ 35.00	$24,900
10.0	Revegetation	Acre	3.20	$ 20,000.00	$64,000
11.0	Temporary Irrigation	Acre	3.20	$ 25,000.00	$80,000
				Subtotal:	$4,448,100
		Contingencies		(@ 20%)	$889,700
				Subtotal:	$5,337,800
				Grand Total:	$5,338,000

PROJECT: **T29884 Sulphur Creek Confluence Stabilization**
DETAIL: *RCB Culvert Quantitiy/Cost*
COMPUTED BY: J Suh
CHECKED BY:

Last updated: **1/22/2013**

Along Sulphur Creek

(Quantities were measured based on cross sections provided in the plans.)

		Cross Sectional Area (SF)			Volume (CF)		
Station	Distance	Excavation	Topsoil	Comp Fill	Excavation	Topsoil	Comp Fill
1520		135.16	26.25	221.00			
1600	80	135.16	26.25	221.00	10812.80	2100.00	17680.00
1800	200	135.00	39.00	500.00	27016.00	6525.00	72100.00
2000	200	0.00	92.80	736.00	13500.00	13180.00	123600.00
2034	34	0.00	92.80	736.00	0.00	3155.20	25024.00

	51328.80	24960.20	238404.00	[CF]
	1,901.07	**924.45**	**8,829.78**	[CY]
Low flow channel along removed Riprap site				
		30.56	**600.00**	*<-comp. fill needed to backfill removed riprap*
Total:	**1,901.07**	**955.01**	**9,429.78**	

Along J03P02 Alignment (beyond Sulphur Creek daylight)

(Quantities were calculated based on typ. Sections and profile shown on the separate sheet.)

(Quantities within the Sulphur Creek daylight is included in the table above.)

Trench			Cross Sectional Area (SF)			Volume (CF)			
Depth	Station	Distance	Excavation	Topsoil	Comp Fill	Excavation	Topsoil	Comp Fill	
10.0	560		240.0	17.0	170.0				
21.0	600	40	735.0	28.0	665.0	19500.00	900.00	16700.00	
12.5	700	100	331.3	19.5	261.3	53312.50	2375.00	46312.50	
8.0	725	25	176.0	15.0	106.0	6340.63	431.25	4590.63	
0.0	801.24	76.24	0.0	7.0	28.0	6709.12	838.64	5108.08	*<-comp fill for 2' dirt cover*

	85862.25	4544.89	72711.21	[CF]
Total:	**3,180.08**	**168.33**	**2,693.01**	[CY]

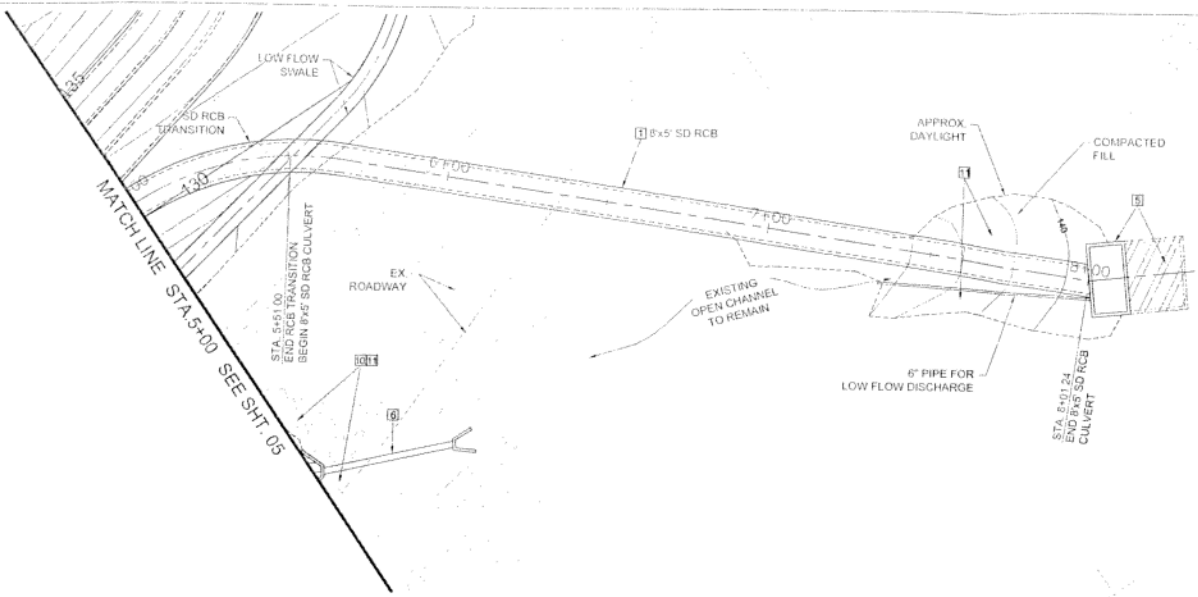

CONSTRUCTION NOTES

1. CONSTRUCT RCB CULVERT PER PLAN AND PROFILE HEREON. TYPICAL SECTIONS ON SHT. 07, AND CROSS SECTIONS ON SHT. 08.
2. CONSTRUCT LOW FLOW SWALE PER PLAN AND PROFILE HEREON, TYPICAL SECTIONS ON SHT. 07, AND CROSS SECTIONS ON SHT. 08.
5. REPLACE EX. SD OUTLET STRUCTURE W/ NEW STRUCTURE PER PLAN HEREON.
6. CONSTRUCT BYPASS CULVERT WITH INLET AND OUTLET STRUCTURE UNDER EX. ROADWAY PER PLAN.
10. REMOVE AND DISPOSE OF EXISTING GROUTED RIPRAP PLACEMENT PER PLAN.
11. RE-VEGETATE NEWLY CREATED HABITAT WITHIN APPROX. DAYLIGHTS PER PLAN HEREON AND TYP. SECTION ON SHT. 07.

NOTES

1. INFORMATION ON CONSTRUCTION OF (3) 9'x12' RCB CULVERT, LOW FLOW SWALE, BANK PROTECTION, RIPRAP INVERT PROTECTION AND ROADWAY RESTORATION IS PROVIDED ON SHTS. 03 AND 04.

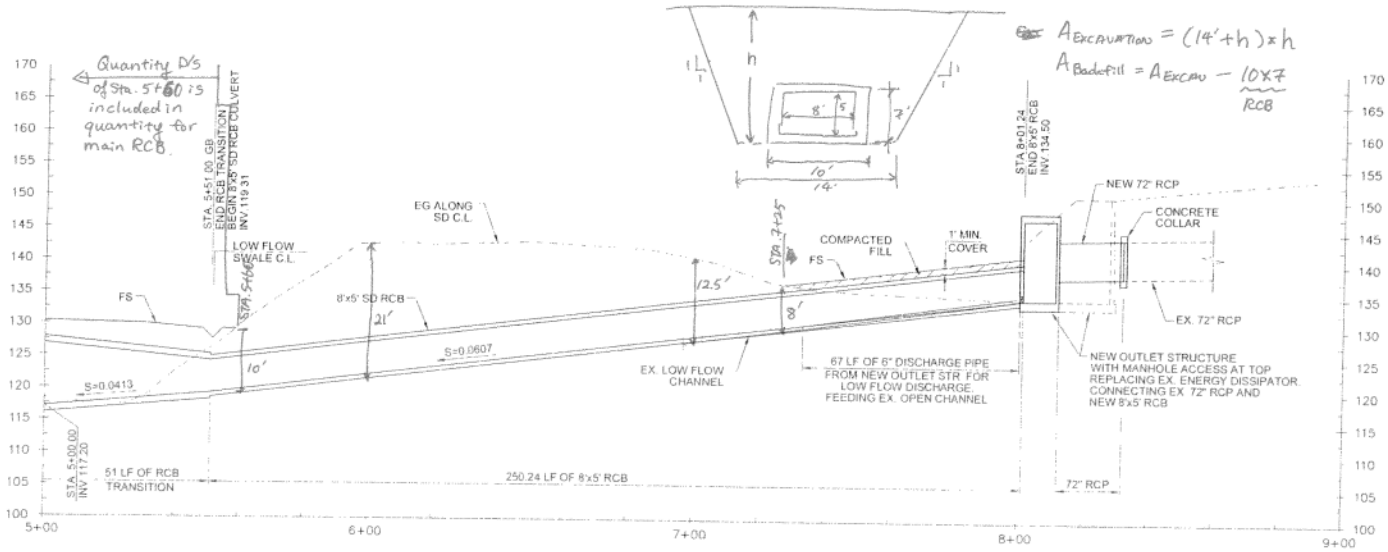

TETRA TECH, INC.
17885 Von Karman Avenue, Suite 500
Irvine, CA 92614
Phone (949) 809 5000, Fax (949) 809 5003

SOUTH ORANGE COUNTY WASTEWATER AUTHORITY
SULPHUR CREEK CONFLUENCE STABILIZATION

PLAN AND PROFILE (2) - SD RCB

DATE 01/24/13

SHT. NO. 5 OF 8

PROJECT: **T29884 Sulphur Creek Confluence Stabilization**
DETAIL: *RCB Culvert Quantitiy/Cost*
COMPUTED BY: J Suh
CHECKED BY:

Last updated: **1/22/2013**

Main RCB Culvert Extension along Sulphur Creek

			X-Sect Area (SF)		Volume (SF)	
Station	Distance	RCB Size	RCB *	Bedding	RCB	Bedding
1520		(3) 9x12	96	46.5		
1837.18	317.18	(3) 9x12/Transition	96	46.5	30449.3	14748.9
1937.18	100.00	Transition/ (3) 12x12	128	60	11200.0	5325.0
2034	96.82	(3) 12x12	128	60	12393.0	5809.2

* Cross section area of RCB is measured graphically in ACAD.

54042.24	25883.07	[CF]
2,001.56	**958.63**	[CY]

$	2,101,642.67	*unit cost of $1,050 for reinforced concrete, completed in place*
$	133,200.00	*ripples (separate calc. sheet)*
$	36,428.02	*bedding ($1.41/CF per RSMeans 31 23.23.17-1300 = $38/CY)*
$	7,899.26	*cutoff wall ($860/CY of Reinf. Concrete, completed in place)*
$	**2,279,169.95**	
$	**4,430.00**	*Unit cost per LF (Total 514 LF)*

	Distance	
Total:	**514.00**	LF

SD RCB (J03P02) Culvert

			X-Sect Area (SF)		Volume (SF)	
Station	Distance	RCB Size	RCB *	Bedding	RCB	Bedding
256.6		9x12	32	15		
476	219.40	9x12/Transition	32	15	7020.8	3291.0
551	75.00	Transition/ 8x5	19	13.98	1912.5	1086.8
801.24	250.24	8x5	19	13.98	4754.6	3498.4

* Cross section area of RCB is measured graphically in ACAD.

13687.86	7876.11	[CF]
506.96	**291.71**	[CY]

$	532,305.67	*unit cost of $1,050 for reinforced concrete, completed in place*
$	22,200.00	*ripples (separate calc. sheet)*
$	11,084.89	*bedding ($1.41/CF per RSMeans 31 23.23.17-1300 = $38/CY)*
$	2,548.15	*cutoff wall ($860/CY of Reinf. Concrete, completed in place)*
$	**568,138.70**	
$	**1,040.00**	*Unit cost per LF (Total 545 LF)*

	Distance	
Total:	**545.00**	LF

TETRA TECH, INC.

Sheet No._____ of _____ Date: 1/17/2013
Checked By:_____ Office: _____
Telephone: _____
Engineer:_____ Job No.: T29884 Sulphur Creek
Subject: Ripples w/in RCB

Ripples

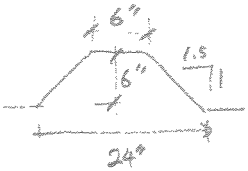

$L = (12' + 12' + 9' - 1') = 32'$

$V_{Ripple} = (0.5 + 2) \times 0.5 \times \frac{1}{2} \times 32$

$= \underline{20\ CF}$ each

w/ 4' interval, there is 25 ripples in one 100' section

Since there are 2 - 100' sections, 2 x 25 ripples

= 50 ripples x 20 CF

= 1000 CF for each barrel

FOR 3 barrel main Culvert,

1000 CF x 3 = 3000 CF ≈ 111 CY

x $1,200 ($750/CY of Reinf. Conc + 50% const. diff.)

= $133,200

FOR 1 barrel SD RCB Culvert,

There is one 100' section of Ripples, 1 x 25 ripple x 20 CF

= 500 CF ≈ 18.5 CY

x $ 1,200

= $ 22,200

This page intentionally left blank