Appendix 3.6-A

AEWSD Well Field Pumping Levels 2007-2014

EXHIBIT "H-2"

ARVIN-EDISON WATER STORAGE DISTRICT

WELLFIELD PUMPING WATER LEVELS - 2007, 2008, 2009, 2013 and 2014

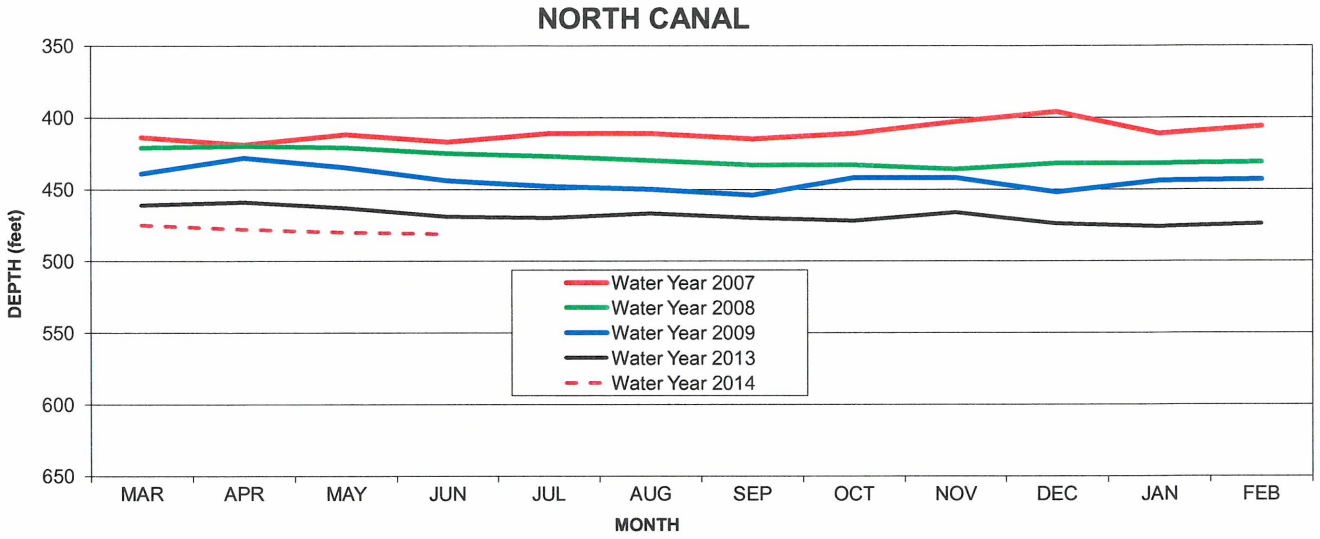

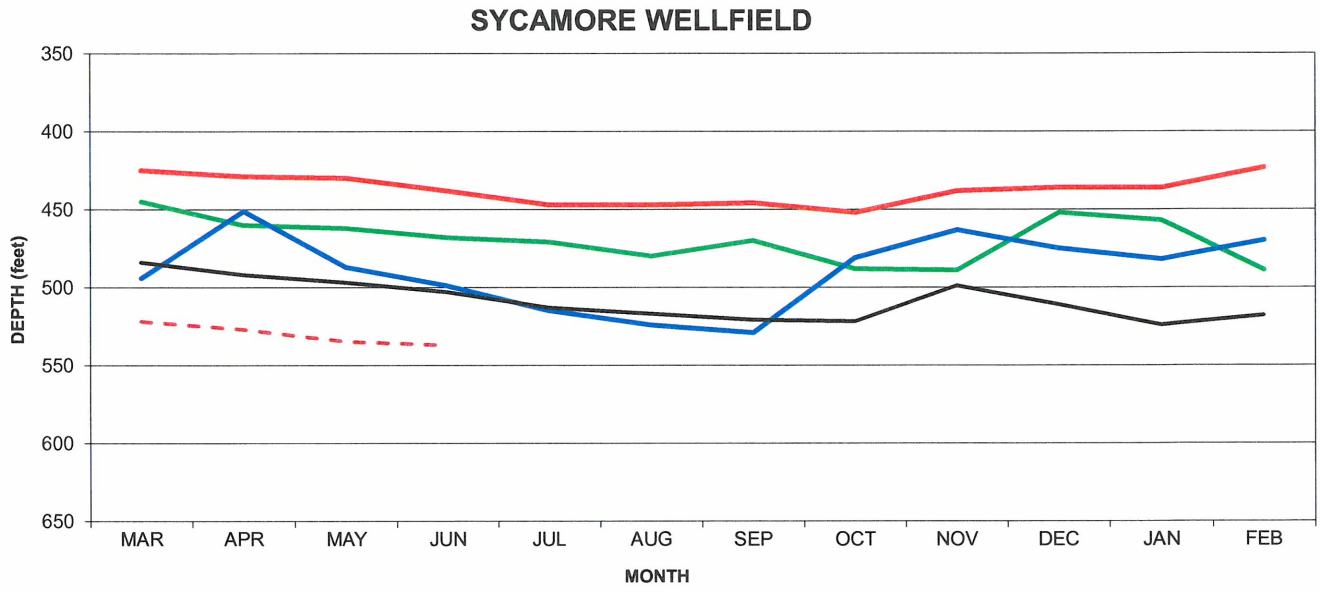

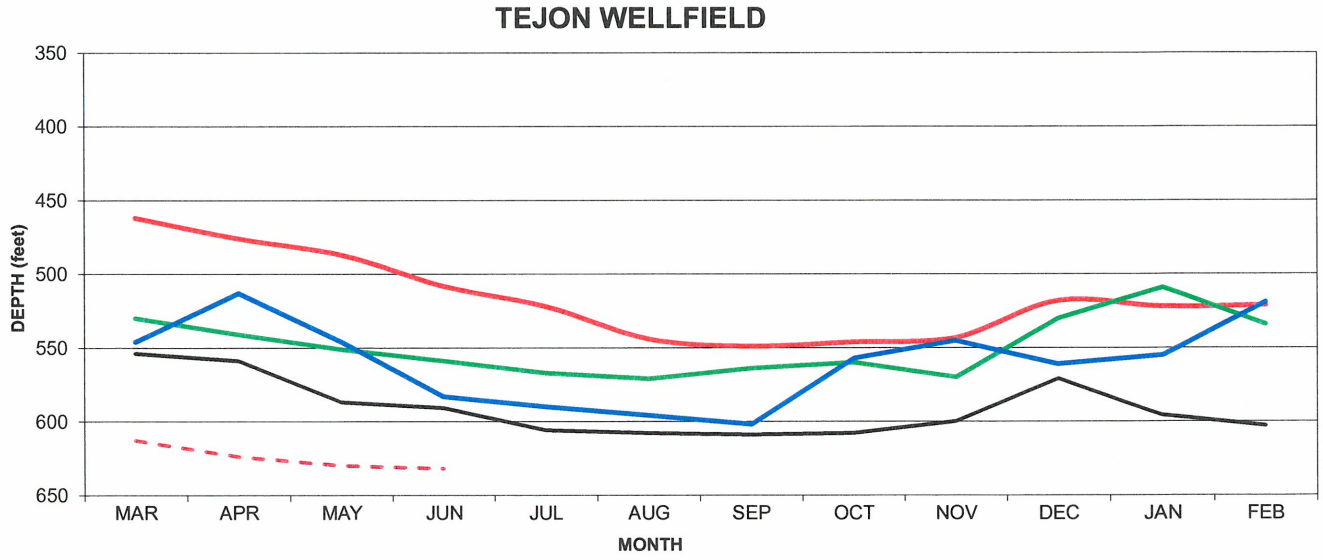

Appendix 3.6-B

AEWSD Landowner Well Hydrographs

APPENDIX 3.6-B: AEWSD LANDOWNER WELL HYDROGRAPHS

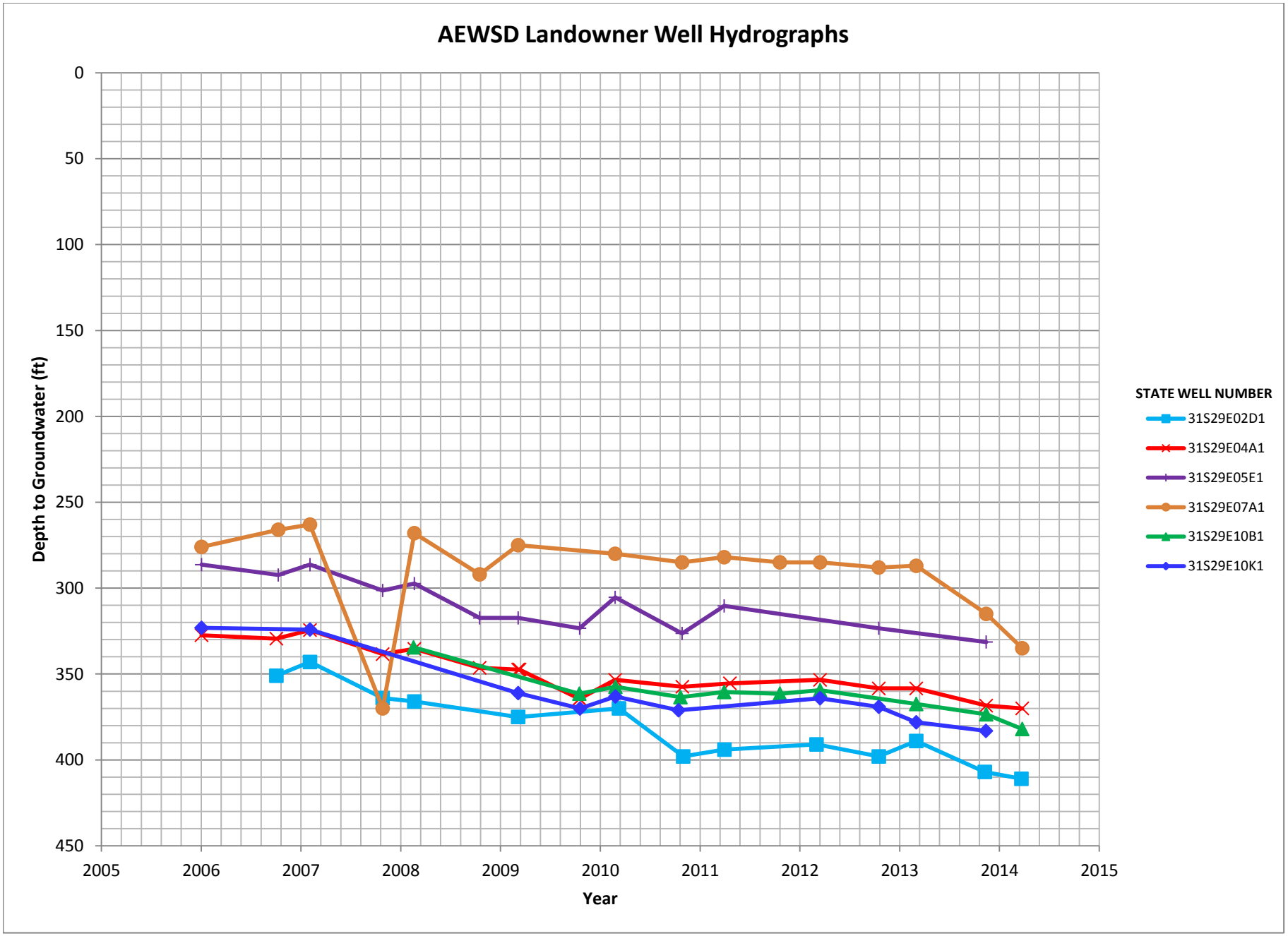

Appendix 3.6-C

Project Benefits Calculations

Arvin-Edison WSD
In-Lieu Program
Project Physical Benefits

JOB #: 121514B2-KIR
DATE: 7/21/2014
COMP BY: DDH
CHKD BY:

(A)	(B)	(C)	(D)	(E)	(F)	(G)	(H)	(I)	(J)	(H)	(I)	(J)
			Phy Benefit #1		**Phy Benefit #2**							
Contract Year 1/	**Analysis Year 2/**	**Year Type 3/**	**Water Conserved (AF) 4/**	**Stored GW (AF) 5/**	**Drought Relief Water Supply Produced (AF) 6/**	**Water Stored (AF) 7/**	**Annual GW Rise (ft) 8/**	**Cumulative GW Rise (ft) 9/**	**Beg & End Year Avg GW Rise (ft) 10/**	**Surplus F-K Delivery Energy Benefits (MWh) 11/**	**Drought Supply Energy Cnsmpt (MWh) 12/**	**Increased GW in Influence Area (MWh) 13/**
N/A	2014	N/A	0	0	0	0	0.00	0.00	0.00	0	0	0
1945	2015	Normal-Wet	0	0	0	0	0.00	0.00	0.00	0	0	0
1946	2016	Normal-Wet	0	0	0	0	0.00	0.00	0.00	0	0	0
1947	2017	Normal-Dry	0	0	0	0	0.00	0.00	0.00	0	0	0
1948	2018	Normal-Dry	0	0	0	0	0.00	0.00	0.00	0	0	0
1949	2019	Normal-Dry	0	0	0	0	0.00	0.00	0.00	0	0	0
1950	2020	Normal-Dry	2,954	0	0	0	0.00	0.00	0.31	3,514	0	50
1951	2021	Normal-Wet	2,743	2,954	0	2,954	0.61	0.61	0.90	3,267	0	150
1952	2022	Wet	2,511	2,743	0	5,697	0.57	1.18	1.44	3,160	0	250
1953	2023	Normal-Dry	0	2,511	0	8,208	0.52	1.70	1.70	0	0	290
1954	2024	Normal-Dry	0	0	0	8,208	0.00	1.70	1.70	0	0	290
1955	2025	Normal-Dry	2,954	0	0	8,208	0.00	1.70	2.01	3,514	0	350
1956	2026	Wet	2,511	2,954	0	11,162	0.61	2.31	2.57	3,160	0	440
1957	2027	Normal-Dry	0	2,511	0	13,673	0.52	2.83	2.83	0	0	490
1958	2028	Wet	2,511	0	0	13,673	0.00	2.83	3.09	3,160	0	530
1959	2029	Normal-Dry	0	2,511	0	16,184	0.52	3.35	3.35	0	0	580
1960	2030	Dry	0	0	0	16,184	0.00	3.35	2.32	0	0	400
1961	2031	Critical High	0	0	-10,000	6,184	-2.07	1.28	1.28	0	-7,322	220
1962	2032	Normal-Wet	0	0	0	6,184	0.00	1.28	1.28	0	0	220
1963	2033	Normal-Wet	0	0	0	6,184	0.00	1.28	1.28	0	0	220
1964	2034	Dry	0	0	0	6,184	0.00	1.28	1.28	0	0	220
1965	2035	Normal-Wet	0	0	0	6,184	0.00	1.28	1.28	0	0	220
1966	2036	Normal-Dry	0	0	0	6,184	0.00	1.28	1.28	0	0	220
1967	2037	Wet	2,511	0	0	6,184	0.00	1.28	1.54	3,160	0	270
1968	2038	Dry	2,682	2,511	0	8,695	0.52	1.80	2.08	3,346	0	360
1969	2039	Wet	2,511	2,682	0	11,377	0.56	2.36	2.62	3,160	0	450
1970	2040	Normal-Dry	0	2,511	0	13,888	0.52	2.88	2.88	0	0	490
1971	2041	Normal-Dry	0	0	0	13,888	0.00	2.88	2.88	0	0	490
1972	2042	Normal-Dry	0	0	0	13,888	0.00	2.88	2.88	0	0	490
1973	2043	Normal-Wet	2,743	0	0	13,888	0.00	2.88	3.16	3,267	0	540
1974	2044	Normal-Wet	2,743	2,743	0	16,631	0.57	3.45	3.73	3,267	0	640
1975	2045	Normal-Wet	0	2,743	0	19,374	0.57	4.02	2.98	0	0	510
1976	2046	Critical High	0	0	-10,000	9,374	-2.07	1.94	0.97	0	-7,322	170
1977	2047	Critical Low	2,682	0	-9,374	0	-1.94	0.00	0.28	3,346	-6,864	50
1978	2048	Wet	2,511	2,682	0	2,682	0.56	0.56	0.82	3,160	0	140
1979	2049	Normal-Wet	2,743	2,511	0	5,193	0.52	1.08	1.36	3,267	0	230
1980	2050	Wet	2,511	2,743	0	7,936	0.57	1.65	1.91	3,160	0	330
1981	2051	Normal-Dry	0	2,511	0	10,447	0.52	2.17	2.17	0	0	370
1982	2052	Wet	2,511	0	0	10,447	0.00	2.17	2.43	3,160	0	420
1983	2053	Wet	2,511	2,511	0	12,958	0.52	2.69	2.95	3,160	0	510
1984	2054	Normal-Wet	0	2,511	0	15,469	0.52	3.21	3.21	0	0	550
1985	2055	Normal-Dry	2,954	0	0	15,469	0.00	3.21	3.51	3,514	0	600
1986	2056	Wet	2,511	2,954	0	18,423	0.61	3.82	4.08	3,160	0	700
1987	2057	Dry	0	2,511	0	20,934	0.52	4.34	4.34	0	0	750
1988	2058	Dry	0	0	0	20,934	0.00	4.34	4.34	0	0	750
1989	2059	Normal-Dry	0	0	0	20,934	0.00	4.34	4.34	0	0	750
1990	2060	Dry	0	0	0	20,934	0.00	4.34	4.34	0	0	750
1991	2061	Normal-Dry	0	0	0	20,934	0.00	4.34	4.34	0	0	750
1992	2062	Dry	0	0	0	20,934	0.00	4.34	4.34	0	0	750
1993	2063	Wet	0	0	0	20,934	0.00	4.34	4.34	0	0	750
1994	2064	*Dry*	0	0	0	20,934	0.00	4.34	4.34	0	0	750
		Totals	**50,308**	**50,308**	**-29,374**	**534,938**	**4.34**			**61,902**	**-21,508**	**19,450**
		Averages	**1,006**	**1,006**	**-587**	**10,699**	**0.09**			**1,238**	**-430**	**389**

Arvin-Edison WSD
In-Lieu Program
Project Physical Benefits

JOB #: 121514B2-KIR
DATE: 7/21/2014
COMP BY: DDH
CHKD BY:

(A)	(B)	(C)	(K)	(L)	(M)	(N)	(O)	(P)
					Phy Benefit #3			**Phy Benefit #4**
Contract Year [1/]	**Analysis Year [2/]**	**Year Type [3/]**	**Increased GW in Project Area (MWh) [14/]**	**Increased GW NCSW & SSW Energy Benefits (MWh) [15/]**	**Annual Energy Saved (MWh) [16/]**	**Cumulative Energy Benefits (MWh) [17/]**	**Cumulative Reduced Greenhouse Gas Emissions (MT CO2) [18/]**	**Annual Greenhouse Gasses Avoided (MT CO2) [19/]**
N/A	2014	N/A	0	0	0	0	0	0
1945	2015	Normal-Wet	0	0	0	0	0	0
1946	2016	Normal-Wet	0	0	0	0	0	0
1947	2017	Normal-Dry	0	0	0	0	0	0
1948	2018	Normal-Dry	0	0	0	0	0	0
1949	2019	Normal-Dry	0	0	0	0	0	0
1950	2020	Normal-Dry	0	16	3,580	3,580	1,515	1,515
1951	2021	Normal-Wet	0	48	3,465	7,045	2,981	1,466
1952	2022	Wet	0	77	3,487	10,532	4,456	1,475
1953	2023	Normal-Dry	16	91	397	10,929	4,624	168
1954	2024	Normal-Dry	16	91	397	11,325	4,792	168
1955	2025	Normal-Dry	0	107	3,971	15,297	6,472	1,680
1956	2026	Wet	0	138	3,738	19,034	8,054	1,581
1957	2027	Normal-Dry	26	151	667	19,702	8,336	282
1958	2028	Wet	0	165	3,855	23,557	9,967	1,631
1959	2029	Normal-Dry	31	179	790	24,347	10,302	334
1960	2030	Dry	20	124	544	24,891	10,532	230
1961	2031	Critical High	11	68	-7,022	17,869	7,560	-2,971
1962	2032	Normal-Wet	11	68	299	18,168	7,687	127
1963	2033	Normal-Wet	11	68	299	18,467	7,814	127
1964	2034	Dry	11	68	300	18,767	7,941	127
1965	2035	Normal-Wet	11	68	299	19,066	8,067	127
1966	2036	Normal-Dry	12	68	300	19,367	8,194	127
1967	2037	Wet	0	82	3,512	22,879	9,681	1,486
1968	2038	Dry	0	111	3,817	26,696	11,296	1,615
1969	2039	Wet	0	140	3,750	30,446	12,882	1,587
1970	2040	Normal-Dry	26	154	670	31,116	13,166	284
1971	2041	Normal-Dry	26	154	670	31,787	13,449	284
1972	2042	Normal-Dry	26	154	670	32,457	13,733	284
1973	2043	Normal-Wet	0	169	3,976	36,433	15,415	1,682
1974	2044	Normal-Wet	0	199	4,106	40,539	17,153	1,737
1975	2045	Normal-Wet	25	159	695	41,234	17,447	294
1976	2046	Critical High	8	52	-7,092	34,142	14,446	-3,001
1977	2047	Critical Low	0	15	-3,453	30,689	12,985	-1,461
1978	2048	Wet	0	44	3,344	34,033	14,400	1,415
1979	2049	Normal-Wet	0	73	3,570	37,602	15,910	1,510
1980	2050	Wet	0	102	3,592	41,194	17,430	1,520
1981	2051	Normal-Dry	20	116	506	41,700	17,644	214
1982	2052	Wet	0	130	3,710	45,409	19,213	1,570
1983	2053	Wet	0	157	3,827	49,237	20,833	1,619
1984	2054	Normal-Wet	27	171	749	49,985	21,150	317
1985	2055	Normal-Dry	0	188	4,302	54,287	22,970	1,820
1986	2056	Wet	0	218	4,078	58,365	24,695	1,725
1987	2057	Dry	38	232	1,020	59,384	25,127	431
1988	2058	Dry	38	232	1,020	60,404	25,558	431
1989	2059	Normal-Dry	40	232	1,022	61,426	25,990	432
1990	2060	Dry	38	232	1,020	62,445	26,422	431
1991	2061	Normal-Dry	40	232	1,022	63,467	26,854	432
1992	2062	Dry	38	232	1,020	64,486	27,285	431
1993	2063	Wet	36	232	1,017	65,504	27,716	430
1994	2064	*Dry*	38	232	1,020	66,523	28,147	431
		Totals	**640**	**6,040**	**66,523**			**28,147**
		Averages	**13**	**121**	**1,330**			**563**

ASSUMPTIONS:

Drought Water Supply:

Yield =	0.2	AF/ac-yr
SW Supply Area =	50,000	ac
Required Supply =	10,000	AF/yr
# GW Wells Introduced =	13	wells
Required Well Production =	769	AF/yr-well
# Months Pumping into AEWSD =	5	months
Required Well Production =	2.55	cfs
Required Well Production =	**1,145**	**gpm**

Influence Area:

NCSW Project Area =	840	ac
NCSW Influence Area =	34,000	ac
Sycamore Project Area =	1,000	ac
Sycamore Influence Area =	6,200	ac
Total Influence Area =	**40,200**	**ac**
Specific Yield =	0.12	

Pumping:

Annual Crop Demands Based on Water Year Type (AF)

Friant Year Type	NC	SYC	TOTAL
Dry	2,298	3,130	5,428
Normal-Dry	2,439	3,307	5,746
Normal-Wet	2,248	3,092	5,340
Wet	2,154	2,965	5,119

North In-Lieu Project Wells =	6	wells	46%
Sycamore In-Lieu Project Wells =	7	wells	54%

Well Op Eff =	64%	
KWh/AF-ft =	**1.6**	**KWh/AF-ft**
GW Pumping =	2.8	AF/ac-yr
NCSW Pumping =	6,650	AF/yr
SSW Pumping =	26,737	AF/yr

Energy Rate:

NCSW =	701	KWh/AF
SSW =	759	KWh/AF
FFPP =	239	KWh/AF

Annual Non-Baseload Output Emission Rate:

http://epa.gov/cleanenergy/documents/egridzips/eGRID_9th_edition_V1-0_year_2010_GHG_Rates.pdf

CO2 Emission Rate =	932.82	lbs/MWh
CO2 Emission Rate =	**0.423118**	**MT/MWh**

NOTES:

1/ Historical Water Contract Year used for 50-year benefits analysis.
2/ Analysis Water Contract Year corresponding to the Historical Water Contract Year [Col (A)] used for the 50-year benefits analysis.
3/ Historical Water Contract Year classification corresponding to column (A).
4/ Water conserved due to Friant-Kern surplus surface water delivered to the project area during the water contract year. Physical Benefit #1.
5/ Stored groundwater resulting from delivery of surface water in-lieu of pumping groundwater to meet crop demands. Stored groundwater effect is accounted at the beginning of the subsequent water year.
6/ Drought relief water recovered during 'critical' water years to provide drought protection for AEWSD's surface water service area (0.2 AF/ac-yr x 50,000 ac). Physical Benefit #2.
7/ Cumulative stored groundwater resulting from surface water deliveries in-lieu of pumping groundwater [Col (E) - Col (F)].
8/ Annual groundwater level rise within the project influence area resulting from surface water deliveries in-lieu of pumping groundwater [Col (G)/(40,200 ac x 0.12)].
9/ Annual groundwater level rise within the project influence area resulting from surface water deliveries in-lieu of pumping groundwater.
10/ Average groundwater level in the water contract year, used to determine well pumping requirements.
11/ Reduced energy use resulting from delivery of surplus Fraint-Kern water in-lieu of pumping groundwater within the project area [(3,116 AF/yr x 701 KWh/AF) + (3,307 AF/yr x 759 KWh/AF) - (3,631 AF/yr x 239 KWh/AF)]
12/ Energy consumed during recovery operations to provide drought supply during critical years [(10,000 AF x 53% x 701 KWh/AF) + (10,000 AF x 47% x 759 KWh/AF)].
13/ Reduced energy use resulting from reduced groundwater well lifts in the project's influence area [Col (I) x 1.6 KWh/AF-ft x 2.8 AF/ac-yr x (40,200 ac - 1,840 ac)].
14/ Reduced energy use resulting from reduced groundwater well lifts in the project area, only occurs when surface water is not available [Col (I) x 1.6 KWh/AF-ft x (3,116 AF/yr + 3,307 AF/yr)].
15/ Reduced energy use resulting from reduced groundwater well lifts in the North Canal and Sycamore Spreading Works [Col (I) x {(6,650 AF/yr x 701 KWh/AF) + (26,737 AF/yr x 759 KWh/AF)}].
16/ Total annual energy savings from the project [Col (H) + Col (I) + Col (J) + Col (K) + Col (L)]. Physical Benefit #3.
17/ Cumulative energy benefits from the project.
18/ Cumulative GHG emission reductions due to reduced energy use [Col (N) x 0.423 MT/MWh].
19/ Annual GHG emission reductions due to reduced energy use [Col (M) x 0.423 MT/MWh]. Physical Benefit #4.

Appendix 3.6-D

Irrigation Scheduling

IRRIGATION SCHEDULING

A Guide for Efficient On-Farm Water Management

University of California
Division of Agriculture and Natural Resources
Publication 21454

IRRIGATION SCHEDULING
A Guide for Efficient On-Farm Water Management

Technical Editors:

David A. Goldhamer
Irrigation and Soils Specialist, Cooperative Extension
Department of Land, Air, and Water Resources
University of California, Davis

and

Richard L. Snyder
Bioclimatologist, Cooperative Extension
Department of Land, Air, and Water Resources
University of California, Davis

University of California
Division of Agriculture and Natural Resources
Publication 21454

ORDERING

For information about ordering this publication contact:

Publications
Division of Agriculture and Natural Resources
University of California
6701 San Pablo Avenue
Oakland, California 94608-1239

telephone: (510) 642-2431
FAX: (510) 643-5470
e-mail: anrpubs@ucdavis.edu

Publication 21454

©1989 by the Regents of the University of California
Division of Agriculture and Natural Resources

All rights reserved.
No part of this publication may be reproduced, stored in a retrieval system, or transmitted, in any form or by any means, electronic, mechanical, photocopying, recording, or otherwise, without the written permission of the publisher and the authors.

Printed in the United States of America.

To simplify information, trade names of products have been used. No endorsement of named or illustrated products is intended, nor is criticism implied of similar products that are not mentioned or illustrated.

Production
Jim Coats, Senior Editor
Alfred Smith, Senior Artist

Appendix A
Crop Coefficients

The following tables list tree and vine crop coefficients (A.1), agronomic crop, vegetable crop, and miscellaneous coefficients (A.2), and coefficients for miscellaneous surfaces (A.3) for date B (Kc1), date C (Kc2), and date E (Kc3), with approximate growth dates. Growth dates correspond to the following: (A) planting (for field and row crops), (B) 10 percent ground shading (for field and row crops) or leaf out (for perennials), (C) peak canopy development, (D) leaf aging effects on transpiration, and (E) end of season.

Table A.1. Tree and vine crop coefficients

Region and crop	Crop coefficient*			Growth date			Code†
	Kc1	Kc2	Kc3	B	C	E	
Imperial Valley							
Citrus orchard	0.56	0.56	0.56	—	—	—	399
Guayule	0.55	0.72	0.50	01/01	07/24	12/31	166
Sacramento Valley							
Deciduous orchard‡	0.50	0.90	0.50	02/15	06/01	11/10	175
Deciduous orchard§	0.55	1.00	0.55	02/15	06/01	11/10	175
	0.55	1.00	0.55	04/15	07/07	11/10	190
Grape	0.27	0.82	0.34	03/15	06/15	10/22	170
Kiwifruit	0.31	1.05	1.05	04/15	06/01	10/31	199
San Joaquin Valley							
Citrus	0.65	0.65	0.65	—	—	—	399
Deciduous orchard‡	0.50	0.90	0.50	02/15	06/01	11/10	175
Deciduous orchard§	0.55	1.00	0.55	02/15	06/01	11/10	175
	0.55	1.00	0.55	04/15	07/07	11/10	190
Grape	0.27	0.82	0.34	03/15	06/15	10/22	170
Olive	0.80	0.80	0.80	—	—	—	399
Pistachio	0.43	1.19	0.25	04/23	06/15	11/15	165
Walnut	0.45	1.14	0.15	03/15	07/07	11/15	170

*Crop coefficients were estimated from Fereres et al. (1981), Doorenbos and Pruitt (1977), Letey and Vaux (1984), State of California Department of Water Resources (1986), Goldhamer et al. (1985), Goldhamer (1989), Pruitt and Snyder (1984), and Buchner, Shaw, and Schulbach (1985).

†The first digit of the code identifies the crop type (1 = deciduous; 3 = constant year-round Kc). For deciduous crops, the last two digits are the percentage of the season from leafout (date B) to the start of Kc decline caused by aging (date D). When the crop type is equal to 3, the Kc Values do not decline, and the last two digits of the code are always 99.

‡Includes peaches, apricots, pears, plums, almonds, and pecans without a cover crop. Add 0.35 to Kc1, 0.30 to Kc2, and 0.25 to Kc3 for orchards with a cover crop.

§Includes apples and cherries without a cover crop. Add 0.35 to Kc1, 0.30 to Kc2, and 0.25 to Kc3 for orchards with a cover crop.

Table A.2. Agronomic, vegetable, and miscellaneous crop coefficients

Region and crop	Crop coefficient*			Growth dates				Code†
	Kc1	Kc2	Kc3	A	B	C	E	
Imperial Valley								
Alfalfa	0.40	1.20	1.20	11/15	11/19	12/09	01/15	274
	0.40	1.20	1.20	01/15	01/20	02/17	03/15	276
	0.40	1.20	1.20	03/15	03/16	04/04	04/14	281
	0.40	1.20	1.20	04/15	04/16	05/20	05/15	277
	0.40	1.20	1.20	05/15	05/16	06/01	06/15	277
	0.40	1.20	1.20	06/15	06/16	07/01	07/15	273
	0.40	1.20	1.20	07/15	07/16	07/31	08/15	277
	0.40	1.20	1.20	08/15	08/16	08/31	09/15	274
	0.40	1.20	1.20	09/15	09/16	10/09	11/15	274
Asparagus	0.30	0.95	0.15	01/01	03/30	05/01	12/31	286
Barley	0.73	1.11	0.01	11/30	12/16	03/06	05/31	273
Barley	0.23	1.04	0.01	11/30	12/16	02/02	05/31	261
Cantaloupe	0.42	0.96	0.90	01/31	03/01	04/15	05/31	291
	0.15	0.97	0.01	07/31	08/08	08/21	11/30	272
Carrots	0.43	1.06	0.75	09/30	10/27	12/21	04/30	269
Cotton	0.40	0.86	0.40	03/31	04/30	08/28	10/31	282
Lettuce	0.17	1.02	0.10	08/31	09/20	10/31	12/31	271
	0.30	0.83	0.30	10/31	11/20	01/15	03/31	264
Onion	0.75	1.03	0.20	12/31	02/15	04/01	05/31	265
Sorghum forage—cut 1	0.14	1.01	0.15	03/31	04/25	05/21	08/31	256
Sorghum forage—cut 2	0.57	1.39	0.30	07/30	08/11	09/07	11/40	243
Sorghum grain	0.10	1.15	0.01	02/28	03/15	04/02	07/31	233
Sorghum	0.09	1.19	0.01	05/31	06/12	07/06	10/31	237
Squash	0.19	0.85	0.80	08/31	09/15	10/27	12/31	296
	0.45	1.30	0.05	12/31	01/21	02/21	04/30	246
Sugarbeet	0.18	1.14	0.70	06/30	07/01	09/27	04/30	262
	0.28	1.10	0.75	09/30	10/17	12/06	06/30	283
Tomato, canning	0.41	1.20	0.48	01/31	03/07	04/18	06/30	279
Tomato, market	0.45	1.12	0.10	12/31	02/15	04/15	05/31	270
Wheat	0.38	1.07	0.15	12/31	01/15	02/13	05/31	279
Northern mountain valleys								
Alfalfa	0.40	1.20	1.20	04/01	04/07	04/30	05/25	280
	0.40	1.20	1.20	05/25	05/26	06/16	07/05	276
	0.40	1.20	1.20	07/05	07/06	07/26	08/15	276
	0.40	1.20	1.20	08/15	08/16	08/28	09/10	273
	0.40	1.20	1.20	04/01	04/07	05/01	05/31	273
	0.40	1.20	1.20	05/31	06/01	06/26	07/15	276
	0.40	1.20	1.20	07/15	07/16	08/06	08/31	274
Barley	0.27	1.15	0.01	04/30	05/01	06/14	08/31	269
Potato	0.08	1.20	0.70	04/30	05/01	08/20	09/30	282
Sacramento Valley								
Alfalfa	0.40	1.20	1.20	02/12	02/23	03/03	03/31	269
	0.40	1.20	1.20	04/01	04/03	04/18	05/15	279
	0.40	1.20	1.20	05/06	05/07	05/20	06/04	283
	0.40	1.20	1.20	06/05	06/06	06/18	07/02	270
	0.40	1.20	1.20	07/03	07/05	07/16	07/31	275
	0.40	1.20	1.20	08/01	08/02	08/16	08/31	273
	0.40	1.20	1.20	09/01	09/02	09/16	10/14	279
Bean, pinto	0.15	1.09	0.22	04/30	05/23	06/06	08/18	275
	0.08	1.08	0.30	06/03	06/11	07/14	09/22	276

*Crop coefficients were estimated from Fereres et al. (1981), Doorenbos and Pruitt (1977), Letey and Vaux (1984), State of California DWR (1986), Phene et al. (1985), and Pruitt and Snyder (1984).

†The first digit of the code identifies the crop type (2=annual crop). The last two digits show the percentage of the growing season from date A to date D. Date D is the date when the Kc values begin to decline because of crop aging.

Continued

Table A.2.—*Continued*

Region and crop	Crop coefficient*			Growth dates				Code†
	Kc1	Kc2	Kc3	A	B	C	E	
Sacramento Valley *(cont.)*								
Corn	0.20	1.15	0.50	04/02	04/25	06/18	08/25	278
	0.20	1.15	0.48	04/30	05/24	07/07	09/08	273
	0.18	1.15	0.55	06/17	07/04	08/05	10/20	274
Milo	0.14	1.10	0.73	05/13	06/15	07/14	09/29	266
	0.13	1.12	0.43	06/17	07/13	08/05	10/27	262
	0.14	1.13	0.62	07/01	07/26	08/21	10/31	268
Rice	0.95	1.24	1.00	05/13	06/12	07/17	10/06	280
Small grains	0.20	1.23	0.09	10/14	11/06	01/10	06/02	273
	0.31	1.23	0.04	11/15	12/16	02/18	07/14	270
	0.25	1.20	0.15	12/16	01/12	03/30	08/04	271
Sugarbeet	0.25	1.10	1.00	02/28	03/19	05/15	08/25	292
	0.20	1.12	0.95	03/01	03/18	05/24	11/01	286
	0.11	1.14	0.83	04/02	04/15	06/29	12/31	287
Tomato	0.26	1.11	0.73	02/26	04/22	06/11	08/11	282
	0.25	1.10	0.63	04/02	05/15	06/24	09/08	277
	0.25	1.14	0.90	04/30	05/25	07/07	09/22	272
	0.20	1.14	0.80	06/03	06/18	07/31	09/29	275
San Joaquin Valley								
Alfalfa	0.40	1.20	1.20	02/12	02/22	03/07	03/21	279
	0.40	1.20	1.20	04/01	04/03	04/18	04/30	285
	0.40	1.20	1.20	05/06	05/07	05/20	06/04	283
	0.40	1.20	1.20	06/05	06/06	06/18	07/02	270
	0.40	1.20	1.20	07/03	07/04	07/15	07/31	275
	0.40	1.20	1.20	08/01	08/02	08/14	08/31	273
Bean	0.14	1.15	0.30	04/01	04/30	05/25	07/31	274
	0.14	1.12	0.35	05/01	05/18	06/08	08/15	268
	0.13	1.07	0.20	06/16	07/01	07/26	09/30	274
Corn	0.19	1.17	0.40	03/16	04/12	05/27	08/15	272
	0.19	1.17	0.40	04/01	04/25	06/14	08/31	268
	0.18	1.10	0.45	04/16	05/07	06/28	09/15	274
	0.19	1.06	0.55	05/16	06/07	07/16	09/30	277
	0.26	1.07	0.15	06/16	06/21	07/25	10/15	269
Cotton	0.12	1.20	0.30	04/01	05/03	07/15	09/30	279
	0.16	1.18	0.40	04/16	05/18	07/06	10/15	269
	0.19	1.15	0.30	05/01	05/24	07/07	10/31	268
Melon	0.14	1.10	0.01	02/15	03/31	04/30	06/30	279
	0.18	1.11	0.08	03/16	04/17	05/23	07/31	275
	0.18	1.10	0.01	04/16	05/09	06/22	08/15	278
Milo	0.16	1.05	0.45	05/01	06/04	07/04	09/30	265
	0.14	1.08	0.30	06/16	07/12	08/10	10/31	263
	0.13	1.06	0.30	07/01	07/29	08/22	11/15	268
Onion	0.30	1.14	0.63	03/01	04/11	05/24	08/31	263
	0.18	1.15	0.78	09/16	10/06	01/01	05/31	272
	0.27	1.11	0.55	11/16	12/12	02/01	07/31	284
Potato	0.51	1.15	0.75	12/01	02/24	03/26	05/15	287
	0.43	1.18	0.25	02/01	02/28	04/12	06/15	275
	0.55	1.21	0.30	03/01	03/21	04/26	06/30	269
Rice	0.95	1.25	0.95	04/01	04/26	05/28	08/31	259

*Crop coefficients were estimated from Fereres et al. (1981), Doorenbos and Pruitt (1977), Letey and Vaux (1984), State of California DWR (1986), Phene et al. (1985), and Pruitt and Snyder (1984).

†The first digit of the code identifies the crop type (2=annual crop). The last two digits show the percentage of the growing season from date A to date D. Date D is the date when the Kc values begin to decline because of crop aging.

Continued

Table A.2.—*Continued*

Region and crop	Crop coefficient* Kc1	Kc2	Kc3	Growth dates A	B	C	E	Code†
San Joaquin Valley *(cont.)*								
Small grains	0.30	1.17	0.20	01/01	02/01	03/22	06/30	272
	0.15	1.11	0.95	03/16	04/10	06/07	09/15	263
	0.25	1.20	0.40	11/01	12/14	01/25	05/15	274
	0.22	1.17	0.38	12/01	12/24	03/02	05/31	275
	0.23	1.16	0.40	12/16	12/23	03/01	05/31	272
	0.23	1.18	0.18	12/16	01/20	03/26	06/30	274
Sugarbeet	0.24	1.13	0.90	02/01	03/27	05/13	08/31	270
	0.20	1.07	1.00	05/01	05/20	07/13	12/15	289
	0.23	1.10	0.95	06/16	07/06	08/13	03/15	284
Tomato	0.25	1.16	0.70	03/01	04/28	06/10	08/15	272
	0.24	1.12	0.70	04/01	05/08	06/28	08/31	271
	0.25	1.12	0.68	05/01	05/22	07/18	09/15	269
Tomato	0.06	1.00	0.80	03/23	04/23	05/30	08/02	275

*Crop coefficients were estimated from Fereres et al. (1981), Doorenbos and Pruitt (1977), Letey and Vaux (1984), State of California DWR (1986), Phene et al. (1985), and Pruitt and Snyder (1984).

†The first digit of the code identifies the crop type (2=annual crop). The last two digits show the percentage of the growing season from date A to date D. Date D is the date when the Kc values begin to decline because of crop aging.

Table A.3. Coefficients for miscellaneous surfaces

Region and condition or crop	Crop coefficient* Kc1	Kc2	Kc3	Growth dates B	C	E	Code†
Statewide							
Open water surfaces	1.10	1.10	1.10	01/01	05/01	12/31	375
Wet light soil	1.05	1.05	1.05	01/01	05/01	12/31	375
Wet dark soil	1.10	1.10	1.10	01/01	05/01	12/31	375
Grazed pasture	0.90	0.90	0.90	01/01	05/01	12/31	375
Grass and clover	1.05	1.05	1.05	01/01	05/01	12/31	375
Statewide							
Evergreen shrubbery	1.15	1.15	1.15	01/01	05/01	12/31	375
Evergreen trees	1.20	1.20	1.20	01/01	05/01	12/31	375

*Crop coefficients are estimated from Doorenbos and Pruitt (1977), and Pruitt and Snyder (1984).

†The first digit of the code identifies the crop type (3=constant year-round Kc). The last two digits are the percentage of the growing season from beginning to date D. When the crop type is equal to 3, the percentage to date D is set to 75 to allow for more flexibility when using the CIMIS irrigation scheduling programs.

Appendix B
Reference Crop Evapotranspiration

Appendix B. Historical average monthly reference crop evapotranspiration (ETo) in California, by county and city in inches per month

County and city	Jan.	Feb.	Mar.	Apr.	May	June	July	Aug.	Sept.	Oct.	Nov.	Dec.
	ETo total inches per month											
ALAMEDA												
Livermore	1.22	1.54	2.93	4.37	5.86	6.61	7.44	6.35	5.31	3.17	1.54	0.85
Oakland	1.46	1.54	2.81	3.98	5.13	5.31	5.98	5.49	4.84	3.05	1.42	0.85
ALPINE												
Markleeville	0.73	0.88	1.95	3.54	5.00	6.14	7.32	6.35	4.37	2.56	1.18	0.49
AMADOR												
Jackson	1.16	1.54	2.81	4.37	5.98	7.20	7.93	7.20	5.31	3.17	1.42	0.85
BUTTE												
Chico	1.22	1.76	2.93	4.72	6.10	7.38	8.54	7.32	5.43	3.66	1.65	0.98
Gridley	1.22	1.76	2.99	4.72	6.10	7.74	8.54	7.08	5.43	3.66	1.65	0.98
Oroville	1.22	1.65	2.81	4.72	6.10	7.56	8.54	7.32	5.31	3.66	1.65	0.98
CALAVERAS												
San Andreas	1.16	1.54	2.81	4.37	5.98	7.32	7.93	7.02	5.31	3.17	1.42	0.73
COLUSA												
Colusa	1.10	1.65	2.81	4.84	6.59	7.44	8.18	6.96	5.67	3.54	1.65	0.98
Williams	1.22	1.65	2.93	4.49	6.10	7.20	8.54	7.32	5.31	3.42	1.59	1.04
CONTRA COSTA												
Brentwood	0.98	1.54	2.93	4.49	6.10	7.09	7.93	6.71	5.20	3.17	1.42	0.73
Concord	1.10	1.43	2.43	4.02	5.49	5.91	6.96	5.98	4.84	3.17	1.30	0.73
Martinez	1.22	1.43	2.43	3.90	5.25	5.55	6.71	5.61	4.72	3.05	1.18	0.73
Pittsburg	0.98	1.54	2.81	4.13	5.61	6.38	7.44	6.35	4.96	3.17	1.30	0.73
DEL NORTE												
Crescent City	0.49	0.88	1.95	2.95	3.66	3.54	4.27	3.66	2.95	1.95	0.94	0.49
EL DORADO												
Camino	0.98	1.68	2.48	3.90	5.98	7.20	7.75	6.82	5.10	3.10	1.50	0.93
FRESNO												
Clovis	0.98	1.54	3.17	4.84	6.35	7.74	8.54	7.32	5.31	3.42	1.42	0.73
Coalinga	1.22	1.65	3.11	4.61	6.22	7.20	8.54	7.32	5.31	3.42	1.59	0.73
Five Points	0.92	1.65	3.30	4.96	6.59	7.68	8.54	7.32	5.43	3.42	1.48	0.85
Fresno	0.85	1.65	3.30	4.84	6.71	7.80	8.42	7.08	5.20	3.17	1.42	0.61
Friant	1.22	1.54	3.05	4.72	6.35	7.68	8.54	7.32	5.31	3.42	1.42	0.73
Kerman	0.85	1.49	3.23	4.84	6.59	7.74	8.42	7.20	5.31	3.42	1.42	0.73
Kingsburg	0.98	1.54	3.36	4.84	6.59	7.74	8.42	7.20	5.31	3.42	1.42	0.73
Reedley	1.10	1.54	3.17	4.72	6.35	7.68	8.54	7.32	5.31	3.42	1.42	0.73

Continued

Appendix B.—*Continued*

County and city	Jan.	Feb.	Mar.	Apr.	May	June	July	Aug.	Sept.	Oct.	Nov.	Dec.
	ETo total inches per month											
GLENN												
Orland	1.22	1.65	3.05	4.84	6.71	7.44	8.79	7.32	5.79	3.78	1.65	1.10
Willows	1.22	1.71	2.93	4.72	6.10	7.20	8.54	7.32	5.31	3.60	1.65	1.04
HUMBOLDT												
Eureka	0.49	1.10	1.95	2.95	3.66	3.66	3.66	3.66	2.95	1.95	0.94	0.49
Ferndale	0.49	1.10	1.95	2.95	3.66	3.66	3.66	3.66	2.95	1.95	0.94	0.49
Garberville	0.61	1.18	2.20	3.07	4.52	5.02	5.49	4.88	3.78	2.44	1.00	0.67
Hoopa	0.49	1.10	2.07	2.95	4.39	5.43	6.10	5.13	3.84	2.44	0.94	0.67
IMPERIAL												
Brawley	2.81	3.75	5.86	8.03	10.37	11.46	11.72	10.01	8.39	6.22	3.54	2.07
Calipatria	2.87	3.86	6.10	8.27	10.50	11.81	11.96	10.37	8.62	6.47	3.78	2.26
El Centro	2.69	3.53	5.61	7.91	10.13	11.10	11.59	9.52	8.27	6.10	3.31	1.95
Holtville	2.81	3.75	5.86	7.91	10.37	11.57	11.96	10.01	8.62	6.22	3.54	2.07
Yuma	3.05	4.08	6.59	8.74	10.98	12.40	12.69	10.98	8.86	6.59	3.96	2.56
INYO												
Bishop	1.71	2.65	4.76	6.73	8.18	10.87	9.76	9.64	7.44	4.76	2.48	1.59
Death Valley	2.20	3.31	5.37	7.68	9.76	11.10	11.35	10.13	8.27	5.37	2.89	1.71
Independence	1.71	2.65	3.42	6.61	8.54	9.45	9.76	8.54	7.09	3.91	2.01	1.46
Lower Haiwee Res.	1.83	2.65	4.39	7.09	8.54	9.45	9.76	8.54	7.09	4.15	2.60	1.46
KERN												
Arvin	1.16	1.76	3.48	4.72	6.59	7.44	8.06	7.32	5.31	3.42	1.65	0.98
Bakersfield	1.04	1.76	3.48	4.72	6.59	7.68	8.54	7.32	5.31	3.54	1.59	0.85
Buttonwillow	0.98	1.76	3.17	4.72	6.59	7.68	8.54	7.32	5.43	3.42	1.54	0.85
China Lake	2.07	3.20	5.25	7.68	9.15	10.04	10.98	9.76	7.32	4.88	2.72	1.71
Delano	0.92	1.76	3.42	4.72	6.59	7.68	8.54	7.32	5.43	3.42	1.42	0.73
Grapevine	1.34	1.76	3.05	4.37	5.61	6.79	7.57	6.83	5.91	3.36	1.89	0.98
Inyokern	1.95	3.09	4.88	7.32	8.54	9.69	10.98	9.40	7.09	5.13	2.60	1.71
Isabella Dam	1.16	1.43	2.75	4.37	5.80	7.32	7.93	6.96	4.96	3.23	1.65	0.85
Lost Hills	0.61	1.10	2.56	4.37	6.96	7.68	8.54	7.08	4.96	3.91	0.83	0.37
Shafter	0.98	1.65	3.42	4.96	6.59	7.68	8.30	7.32	5.43	3.42	1.54	0.85
Taft	1.28	1.76	3.11	4.25	6.22	7.32	8.54	7.32	5.37	3.42	1.65	0.98
Tehachapi	1.40	1.76	3.17	4.96	6.10	7.68	7.93	7.32	5.91	3.42	2.07	1.22
KINGS												
Corcoran	0.85	1.54	3.30	5.20	7.20	7.91	8.42	7.32	5.79	3.42	1.42	0.73
Hanford	0.85	1.54	3.42	4.96	6.59	7.68	8.30	7.20	5.43	3.42	1.42	0.73
Kettleman City	0.98	1.76	3.42	5.31	7.20	7.91	8.42	7.44	5.91	3.66	1.65	0.98
Lemoore	0.85	1.54	3.42	4.96	6.59	7.68	8.30	7.32	5.43	3.42	1.42	0.73
LAKE												
Lakeport	1.10	1.32	2.56	3.54	5.13	6.02	7.32	6.10	4.72	2.93	1.24	0.85
Lower Lake	1.22	1.43	2.69	4.49	5.25	6.26	7.44	6.41	4.96	3.05	1.30	0.92
LASSEN												
Ravendale	0.61	1.05	2.32	4.13	5.61	6.73	7.93	7.32	4.72	2.81	1.18	0.49
Susanville	0.73	0.99	2.20	4.13	5.61	6.50	7.81	6.96	4.61	2.81	1.18	0.49
LOS ANGELES												
Burbank	2.07	2.76	3.66	4.72	5.13	6.02	6.59	6.71	5.43	4.03	2.60	1.95
Glendora	1.95	2.54	3.60	4.49	5.37	6.14	7.32	6.83	5.67	4.15	2.60	1.95
Gorman	1.59	2.15	3.42	4.61	5.49	7.38	7.69	7.08	5.91	3.60	2.36	1.10
Lancaster	2.14	2.98	4.64	5.91	8.54	9.69	10.98	9.76	7.32	4.64	2.78	1.71
Long Beach	2.20	2.54	3.42	3.78	4.76	4.96	5.25	4.88	4.49	3.42	2.36	1.95
Los Angeles	2.20	2.65	3.66	4.72	5.49	5.79	6.22	5.86	5.02	3.91	2.60	1.95
Palmdale	1.95	2.65	4.15	5.08	7.57	8.54	9.89	9.76	6.73	4.15	2.60	1.71
Pasadena	2.07	2.65	3.66	4.72	5.13	6.02	7.08	6.71	5.55	4.15	2.60	1.95
Pearblossom	1.71	2.43	3.66	4.72	7.32	7.68	9.89	7.93	6.38	4.03	2.60	1.59
Redondo Beach	2.20	2.43	3.30	3.78	4.52	4.72	5.37	4.76	4.37	2.81	2.36	1.95
San Fernando	1.95	2.65	3.54	4.61	5.49	5.91	7.32	6.71	5.31	3.91	2.60	1.95

Continued

Appendix B.—*Continued*

County and city	Jan.	Feb.	Mar.	Apr.	May	June	July	Aug.	Sept.	Oct.	Nov.	Dec.
	ETo total inches per month											
MADERA												
Chowchilla	0.98	1.43	3.17	4.72	6.59	7.80	8.54	7.32	5.31	3.42	1.42	0.67
Madera	0.92	1.43	3.17	4.84	6.59	7.80	8.54	7.32	5.31	3.42	1.42	0.73
Raymond	1.22	1.54	2.99	4.61	6.10	7.56	8.42	7.32	5.20	3.42	1.42	0.73
MARIN												
Novato	1.34	1.54	2.43	3.54	4.39	6.02	5.86	5.37	4.37	2.81	1.42	0.73
San Rafael	1.22	1.32	2.44	3.30	4.03	4.84	4.84	4.88	4.25	2.69	1.30	0.73
MARIPOSA												
Coulterville	1.10	1.54	2.81	4.37	5.86	7.32	8.06	6.96	5.31	3.36	1.42	0.73
Mariposa	1.10	1.54	2.81	4.43	5.86	7.38	8.24	7.08	5.02	3.42	1.42	0.73
Yosemite Village	0.73	0.99	2.32	3.66	5.13	6.50	7.08	6.10	4.43	2.87	1.06	0.55
MENDOCINO												
Fort Bragg	0.85	1.27	2.20	2.95	3.66	3.54	3.66	3.66	2.95	2.32	1.18	0.73
Hopland	1.10	1.32	2.56	3.43	5.00	5.91	6.47	5.74	4.49	2.81	1.30	0.73
Point Arena	0.98	1.32	2.32	2.95	3.66	3.90	3.66	3.66	2.95	2.32	1.18	0.73
Ukiah	0.98	1.32	2.56	3.31	5.00	5.79	6.71	5.86	4.49	2.81	1.30	0.73
MERCED												
Los Banos	0.98	1.54	3.17	4.72	6.10	7.38	8.18	7.02	5.31	3.42	1.42	0.73
Merced	0.98	1.54	3.17	4.72	6.59	7.91	8.54	7.20	5.31	3.42	1.42	0.73
MONO												
Bridgeport	0.73	0.88	2.20	3.84	5.49	6.61	7.44	6.71	4.72	2.69	1.18	0.49
MONTEREY												
Castroville	1.59	1.76	2.69	3.54	4.39	4.37	4.52	4.15	3.78	2.81	1.77	1.34
King City	1.71	1.98	3.42	4.37	4.37	5.61	6.14	6.71	6.47	5.20	2.24	1.34
Long Valley	1.53	1.87	3.17	4.13	5.80	6.50	7.32	6.71	5.31	3.60	1.95	1.22
Monterey	1.71	1.76	2.69	3.54	4.03	4.13	4.27	4.15	3.54	2.81	1.89	1.46
Salinas	1.59	1.87	2.72	3.78	4.76	4.72	5.00	4.52	4.02	2.93	1.89	1.34
Soledad	1.71	1.98	3.42	4.37	5.49	5.43	6.47	6.22	5.20	3.66	2.24	1.46
NAPA												
St. Helena	1.22	1.54	2.81	3.90	5.13	6.14	6.96	6.22	4.84	3.05	1.42	0.85
Yountville	1.34	1.65	2.81	3.90	5.13	6.02	7.08	6.10	4.84	3.05	1.54	0.85
NEVADA												
Grass Valley	1.10	1.54	2.56	4.02	5.74	7.09	7.93	7.08	5.31	3.23	1.48	0.92
Nevada City	1.10	1.54	2.56	3.90	5.80	6.85	7.93	6.96	5.31	3.17	1.42	0.85
Soda Springs	0.73	0.66	1.77	2.95	4.27	5.31	6.20	5.49	4.13	2.50	0.71	0.67
Truckee	0.73	0.66	1.71	3.19	4.39	5.43	6.35	5.74	4.13	2.44	0.83	0.61
ORANGE												
Laguna Beach	2.20	2.65	3.42	3.78	4.64	4.61	4.88	4.88	4.37	3.42	2.36	1.95
Santa Ana	2.20	2.65	3.66	4.49	4.64	5.43	6.22	6.10	4.72	3.66	2.48	1.95
PLACER												
Auburn	1.22	1.65	2.81	4.37	6.10	7.38	8.30	7.32	5.43	3.42	1.59	0.98
Blue Canyon	0.73	1.05	2.14	3.43	4.76	6.02	7.20	6.10	4.61	2.87	0.94	0.61
Colfax	1.10	1.54	2.56	4.02	5.80	7.09	7.93	7.02	5.31	3.17	1.42	0.92
Lincoln	1.22	1.65	2.81	4.72	6.10	7.44	8.42	7.32	5.43	3.66	1.89	1.22
Roseville	1.10	1.71	3.05	4.72	6.22	7.68	8.54	7.32	5.55	3.66	1.65	0.98
Tahoe City	0.73	0.66	1.71	2.95	4.27	5.43	6.10	5.61	4.13	2.44	0.83	0.61
PLUMAS												
Portola	0.73	0.88	1.95	3.54	4.88	5.91	7.32	5.86	4.25	2.69	0.94	0.49
Quincy	0.73	0.94	2.20	3.54	4.88	5.91	7.32	5.86	4.37	2.81	1.18	0.49

Continued

Appendix B.—*Continued*

County and city	Jan.	Feb.	Mar.	Apr.	May	June	July	Aug.	Sept.	Oct.	Nov.	Dec.
	ETo total inches per month											
RIVERSIDE												
Beaumont	1.95	2.31	3.42	4.37	6.10	7.09	7.57	7.93	6.02	3.91	2.60	1.71
Blythe	3.17	4.19	6.71	8.86	11.11	12.40	12.81	11.11	9.09	6.71	4.02	2.69
Coachella	2.93	4.39	6.22	8.39	10.50	11.93	12.33	10.13	8.86	6.22	3.78	2.44
Desert Center	2.93	4.08	6.35	8.50	10.98	12.05	12.20	11.11	8.98	6.35	3.90	2.56
Elsinore	2.07	2.76	3.91	4.43	5.86	7.09	7.63	7.02	5.79	3.91	2.60	1.95
Indio	2.93	3.97	6.22	8.27	10.50	11.93	12.33	10.01	8.86	6.35	3.78	2.44
Oasis	2.69	2.75	5.86	8.03	10.37	11.69	11.59	10.01	8.39	6.22	3.43	2.07
Palm Desert	1.95	3.53	4.88	7.68	8.54	10.63	9.76	9.15	8.39	6.10	2.72	1.77
Palm Springs	1.95	2.87	4.88	7.20	8.30	8.50	11.59	8.30	7.20	5.86	2.72	1.71
Riverside	2.07	2.87	4.03	4.13	6.10	7.09	7.93	7.57	6.14	4.15	2.60	1.95
SACRAMENTO												
Courtland	0.92	1.54	2.93	4.43	6.10	6.85	7.93	6.71	5.31	3.17	1.36	0.73
Sacramento	0.98	1.76	3.17	4.72	6.35	7.68	8.36	7.20	5.43	3.66	1.65	0.92
SAN BENITO												
Hollister	1.46	1.76	3.05	4.25	5.49	5.67	6.35	5.86	4.96	3.54	1.65	1.10
SAN BERNARDINO												
Baker	2.69	3.86	6.10	8.27	10.37	11.81	12.20	10.98	8.86	6.10	3.31	2.07
Barstow	2.56	3.64	5.74	7.91	10.13	11.57	11.96	10.37	8.62	5.74	3.31	2.07
Chino	2.07	2.87	3.91	4.49	5.74	6.50	7.32	7.08	5.91	4.15	2.60	1.95
Crestline	1.46	1.87	3.30	4.37	5.49	6.61	7.81	7.08	5.43	3.54	2.24	1.59
Lucerne Valley	2.20	2.87	5.13	6.50	9.15	10.98	11.35	9.89	7.44	5.00	2.95	1.83
Needles	3.17	4.19	6.59	8.86	10.98	12.40	12.81	10.98	8.86	6.59	4.02	2.69
San Bernardino	1.95	2.65	3.78	4.61	5.74	6.85	7.93	7.44	5.91	4.15	2.60	1.95
Twentynine Palms	2.56	3.64	5.86	7.91	10.13	11.22	11.23	10.25	8.62	5.86	3.43	2.20
Victorville	2.32	3.09	4.88	6.73	9.28	10.04	11.23	9.76	7.44	5.13	2.83	1.83
SAN DIEGO												
Chula Vista	2.20	2.65	3.42	3.78	4.88	4.72	5.49	4.88	4.49	3.42	2.36	1.95
Escondido	2.07	2.76	3.78	4.72	5.49	6.14	6.71	6.47	5.43	3.78	2.48	1.95
Fallbrook	2.07	2.65	3.78	4.72	5.49	6.14	6.84	6.47	5.43	3.78	2.48	1.95
Oceanside	2.20	2.65	3.42	3.78	4.88	4.72	4.88	5.13	4.13	3.30	2.36	1.95
Pine Valley	1.46	1.76	2.93	4.13	5.49	6.85	7.93	7.32	5.91	4.03	2.24	1.47
Ramona	2.07	2.54	3.91	4.72	5.49	6.50	7.32	6.96	5.55	3.91	2.60	1.71
San Diego	2.20	2.65	3.42	3.78	4.88	4.88	5.13	4.88	4.49	3.42	2.36	1.95
Santee	2.07	2.65	3.66	4.49	5.49	6.14	6.84	6.22	5.43	3.78	2.60	1.95
Warner Springs	1.59	2.20	3.66	4.72	5.74	7.56	8.30	7.69	6.26	4.03	2.48	1.47
SAN FRANCISCO												
San Francisco	1.46	1.32	2.44	2.95	3.66	4.61	4.88	4.76	4.13	2.81	1.30	0.73
SAN JOAQUIN												
Farmington	1.46	1.49	2.93	4.72	6.22	7.56	8.06	6.83	5.31	3.30	1.42	0.73
Lodi	0.85	1.54	2.93	5.08	6.47	6.97	7.69	7.69	5.20	3.05	1.30	0.73
Manteca	1.46	1.49	2.99	4.72	6.35	7.56	8.06	6.83	5.31	3.30	1.42	0.61
Stockton	0.79	1.54	2.93	4.72	6.22	7.44	8.06	6.83	5.31	3.23	1.42	0.61
Tracy	0.98	1.54	2.93	4.49	6.10	7.32	7.93	6.71	5.31	3.17	1.30	0.73
SAN LUIS OBISPO												
Arroyo Grande	1.95	2.20	3.17	3.78	4.27	4.72	4.27	4.64	3.78	3.17	2.36	1.71
Atascadero	1.22	1.54	2.81	3.90	4.52	6.02	6.71	6.22	4.96	3.17	1.65	0.98
Morro Bay	1.95	2.20	3.11	3.54	4.27	4.49	4.64	4.58	3.84	3.48	2.13	1.71
Paso Robles	1.59	1.98	3.17	4.25	5.49	6.26	7.32	6.71	5.08	3.66	2.13	1.40
San Luis Obispo	1.95	2.20	3.17	4.13	4.88	5.31	4.64	5.49	4.37	3.54	2.36	1.71
San Miguel	1.59	1.98	3.23	4.25	5.00	6.38	7.44	6.83	5.08	3.66	2.13	1.40
San Simeon	1.95	1.98	2.93	3.54	4.15	4.43	4.58	4.27	3.54	3.05	2.01	1.71
SAN MATEO												
Half Moon Bay	1.46	1.65	2.44	2.95	3.91	4.25	4.27	4.15	3.54	2.81	1.30	0.98
Redwood City	1.46	1.76	2.87	3.84	5.19	5.31	6.22	5.61	4.84	3.11	1.65	0.98

Continued

Appendix B.—*Continued*

County and city	Jan.	Feb.	Mar.	Apr.	May	June	July	Aug.	Sept.	Oct.	Nov.	Dec.
	ETo total inches per month											
SANTA BARBARA												
Carpenteria	1.95	2.43	3.17	3.90	4.76	5.20	5.49	5.74	4.49	3.42	2.36	1.95
Guadalupe	1.95	2.20	3.17	3.66	4.88	4.61	4.52	4.58	4.13	3.30	2.36	1.71
Lompoc	1.95	2.20	3.17	3.66	4.76	4.61	4.88	4.76	3.90	3.17	2.36	1.71
Los Alamos	1.83	1.98	3.17	4.13	4.88	5.31	5.74	5.49	4.43	3.66	2.36	1.59
Santa Barbara	1.95	2.54	3.17	3.78	4.64	5.08	5.49	4.49	3.42	2.36	1.83	1.83
Santa Maria	1.83	2.20	3.17	4.02	5.00	5.08	5.13	5.13	4.49	3.54	2.36	1.71
Solvang	1.95	1.98	3.30	4.25	5.00	5.55	6.10	5.61	4.37	3.66	2.24	1.59
SANTA CLARA												
Gilroy	1.34	1.76	3.05	4.13	5.25	5.55	6.10	5.49	4.72	3.42	1.65	1.10
Los Gatos	1.46	1.76	2.81	3.90	5.00	5.61	6.22	5.49	4.72	3.17	1.65	1.10
Palo Alto	1.46	1.76	2.81	3.84	5.19	5.31	6.22	5.61	4.96	3.17	1.65	0.98
San Jose	1.46	1.76	3.05	4.13	5.49	5.79	6.47	5.86	5.20	3.30	1.77	0.98
SANTA CRUZ												
Santa Cruz	1.46	1.76	2.56	3.54	4.27	4.37	4.76	4.39	3.78	2.81	1.65	1.22
Watsonville	1.46	1.76	2.69	3.66	4.64	4.49	4.88	4.15	4.02	2.93	1.77	1.22
SHASTA												
Burney	0.73	0.99	2.14	3.54	4.88	5.91	7.44	6.41	4.37	2.93	0.94	0.61
Fall River Mills	0.61	0.99	2.07	3.66	5.00	6.14	7.81	6.71	4.61	2.81	0.94	0.49
Glenburn	0.61	0.99	2.07	3.66	5.00	6.26	7.81	6.71	4.72	2.81	0.94	0.55
Redding	1.22	1.43	2.62	4.13	5.61	7.09	8.54	7.32	5.31	3.23	1.42	0.85
SIERRA												
Downieville	0.73	0.99	2.26	3.54	5.00	6.02	7.44	6.22	4.72	2.81	0.94	0.61
Sierraville	0.73	1.10	2.20	3.19	4.52	5.91	7.32	6.35	4.25	2.62	0.94	0.49
SISKIYOU												
Happy Camp	0.49	0.88	1.95	2.95	4.27	5.20	6.10	5.25	4.13	2.44	0.94	0.49
Mt. Shasta	0.49	0.88	1.95	2.95	4.52	5.31	6.71	5.74	4.02	2.20	0.71	0.49
Tulelake	0.49	0.88	2.07	3.43	5.25	5.91	7.93	6.71	4.37	2.69	0.94	0.49
Weed	0.49	0.88	1.95	2.48	4.52	5.31	6.71	5.49	3.66	1.95	0.94	0.49
Yreka	0.61	0.88	2.14	2.95	4.88	5.79	7.32	6.47	4.25	2.50	0.94	0.49
SOLANO												
Benecia	1.34	1.43	2.69	3.78	4.88	5.02	6.35	5.49	4.43	2.93	1.18	0.73
Fairfield	1.10	1.65	2.81	4.02	5.49	6.14	7.81	5.98	4.84	3.05	1.42	0.85
Rio Vista	0.85	1.65	2.81	4.37	5.86	6.73	7.93	6.47	5.08	3.17	1.30	0.73
SONOMA												
Cloverdale	1.10	1.43	2.56	3.43	5.00	5.91	6.22	5.61	4.49	2.81	1.42	0.73
Fort Ross	1.22	1.43	2.20	2.95	3.66	4.49	4.15	4.27	3.43	2.44	1.18	0.49
Healdsburg	1.22	1.54	2.43	3.54	5.00	5.91	6.10	5.61	4.49	2.81	1.42	0.73
Petaluma	1.22	1.54	2.81	3.66	4.64	5.61	4.64	5.74	4.49	2.93	1.42	0.85
Santa Rosa	1.22	1.65	2.81	3.66	5.00	6.02	6.10	5.86	4.49	2.93	1.54	0.73
STANISLAUS												
La Grange	1.22	1.54	3.11	4.72	6.22	7.68	8.54	7.32	5.31	3.42	1.42	0.73
Modesto	0.85	1.43	3.17	4.72	6.41	7.68	8.06	6.83	5.02	3.42	1.42	0.73
Newman	0.98	1.54	3.17	4.61	6.22	7.44	8.06	6.71	4.96	3.42	1.42	0.73
Oakdale	1.22	1.49	3.17	4.72	6.22	7.68	8.06	7.08	5.08	3.42	1.42	0.73
Turlock	0.85	1.49	3.17	4.72	6.47	7.68	8.18	7.02	5.08	3.42	1.42	0.73
SUTTER												
Yuba City	1.34	2.09	2.81	4.37	5.74	7.20	7.08	6.10	4.72	3.17	1.18	0.85
TEHAMA												
Corning	1.22	1.76	2.93	4.49	6.10	7.26	8.06	7.20	5.31	3.66	1.65	1.10
Red Bluff	1.22	1.76	2.93	4.37	5.86	7.44	8.54	7.32	5.43	3.54	1.65	1.04

Continued

Appendix B.—*Continued*

County and city	Jan.	Feb.	Mar.	Apr.	May	June	July	Aug.	Sept.	Oct.	Nov.	Dec.
	ETo total inches per month											
TRINITY												
Hayfork	0.49	1.10	2.32	3.54	4.88	5.91	6.96	5.98	4.49	2.75	0.94	0.73
Weaverville	0.61	1.10	2.20	3.31	4.88	5.91	7.32	5.98	4.37	2.69	0.94	0.73
TUOLUMNE												
Groveland	1.10	1.54	2.75	4.13	5.74	7.20	7.93	6.59	5.08	3.30	1.42	0.73
Sonora	1.10	1.54	2.75	4.13	5.80	7.20	7.93	6.71	5.08	3.23	1.42	0.73
TULARE												
Alpaugh	0.85	1.71	3.42	4.84	6.59	7.68	8.18	7.32	5.43	3.42	1.42	0.73
Badger	0.98	1.32	2.69	4.13	5.98	7.32	7.69	6.96	4.84	3.30	1.36	0.73
Dinuba	1.10	1.54	3.17	4.72	6.22	7.68	8.54	7.32	5.31	3.42	1.42	0.73
Porterville	1.22	1.76	3.42	4.72	6.59	7.68	8.54	7.32	5.31	3.42	1.42	0.73
Visalia	0.98	1.76	3.42	5.43	6.96	8.15	8.42	7.20	5.67	3.78	1.65	0.85
VENTURA												
Oxnard	2.20	2.54	3.17	3.66	4.39	4.61	5.37	4.76	4.02	3.30	2.36	1.95
Thousand Oaks	2.20	2.65	3.42	4.49	5.37	5.91	6.71	6.35	5.43	3.91	2.60	1.95
Ventura	2.20	2.65	3.17	3.78	4.64	4.72	5.49	4.88	4.13	3.42	2.48	1.95
YOLO												
Davis	0.98	1.87	3.30	4.96	6.35	7.56	8.18	7.08	5.43	4.03	1.77	0.98
Winters	1.71	1.65	2.93	4.37	5.80	7.09	7.93	6.71	5.31	3.30	1.59	0.98
Woodland	1.04	1.76	3.17	4.72	6.10	7.68	8.18	7.20	5.43	3.66	1.65	1.04
YUBA												
Brownsville	1.10	1.43	2.56	4.02	5.74	6.79	7.93	6.83	5.31	3.36	1.48	0.85

References and Bibliography

Ayers, R. S., and D. W. Westcot. 1985. Water quality for agriculture. Irrigation and drainage paper No. 29. Rome: Food and Agriculture Organization of the United Nations (FAO). 97 pp.

Baver, L. D., W. H. Gardner, and W. R. Gardner. 1972. Soil Physics. New York: J. Wiley and Sons. 488 pp.

Bernstein, Leon. 1975. Effects of salinity and sodicity on plant growth. Am. Rev. Phytopathol. 13:295–311.

Buchner, R. P., D. A. Shaw, and H. Schulbach. 1985. Kiwi irrigation scheduling. Soil and Water Newsletter No. 62. Davis: University of California Cooperative Extension. pp. 1–6.

Campbell, R. E., W. E. Larson, T. S. Ausheim, and P. L. Brown. 1960. Alfalfa response to irrigation frequencies in the presence of a water table. Agron. J. 52:437–41.

Chapman, H. D. 1966. Diagnostic Criteria For Plants and Soils. Berkeley: University of California, Division of Agriculture and Natural Resources. 793 pp.

Clark, R. B. 1983. Plant genotype differences in uptake, translocation, accumulation, and use of mineral elements required for plant growth. Plant Soil 72:175–96.

Clawson, K. L., and Blad, B. L. 1982. Infrared thermometry for scheduling irrigations in corn. Agron. J. 74:311–16.

Doorenbos, J., and W. O. Pruitt. 1977. Crop water requirements. 2d ed. Irrigation and Drainage Paper No. 24. Rome: Food and Agriculture Organization of the United Nations. 144 pp.

Fereres, E., P. M. Kitlas, W. O. Pruitt, and R. M. Hagan. 1980. Development of irrigation management programs. Report prepared for the California Department of Water Resources, Agreement No. B53142.

Fereres, E., and I. Puech. 1980. Irrigation Scheduling Guide. California Department of Water Resources, Office of Water Conservation, Sacramento.

Fereres, E. (ed). 1981. Drip irrigation management. Berkeley: University of California, Division of Agriculture and Natural Resources. Leaflet 21259. 39 pp.

Fereres, E., D. W. Henderson, W. O. Pruitt, W. F. Richardson, and R. S. Ayers. 1981. Basic irrigation scheduling. Berkeley: University of California, Division of Agriculture and Natural Resources. Leaflet 21199. 8 pp.

Fereres, E., D. A. Martinich, T. M. Aldrich, J. R. Castel, E. Holzapfel, and H. Schulbach. 1982. Drip irrigation saves money in young almond orchards. Calif. Agric. 36(9–10):12–13.

Frevert, D. K., R. W. Hill, and B. C. Braaten. 1983. Estimation of FAO evapotranspiration coëfficients. New York: Irrigation and Drainage Division, American Society of Civil Engineers.

Gardner, W. R. 1983. Soil properties and efficient water use: An overview. *In* Limitations to Efficient Water Use in Crop Protection. H. M. Taylor, W. Jordan, and T. Sinclair, eds. Madison: American Society of Agronomy Publications. pp. 45–64.

Geiser, D. M., D. C. Clack, E. R. Allred, and K. W. Stange. 1982. Irrigation scheduling using crop canopy temperature difference. Trans. ASAE 25:689–96.

Goldhamer, D. A. 1989. Drought irrigation strategies for deciduous orchards. Oakland: University of California, Division of Agriculture and Natural Resources. Publication 21453. 20 pp.

Goldhamer, D. A., R. K. Kjelgren, L. Williams, and R. Beede. 1985. Water use requirements of pistachio trees and response to water stress. Proceedings of the National Conference on Advances in Evapotranspiration. American Society of Agricultural Engineers. St. Joseph, Missouri. pp. 216–23.

Grimes, D. W., R. L. Sharma, and D. W. Henderson. 1984. Developing the resource potential of a shallow water table. Davis: California Water Resources Center, University of California, Contribution No. 188. 39 pp.

Grimes, D. W., and H. Yamada. 1982. Relation of cotton growth and yield to minimum leaf water potential. Crop Sci. 22:134–39.

Gupta, U. C., Y. W. Jame, C. A. Campbell, A. J. Leyshon, and W. Nicholaichuk. 1985. Boron toxicity and deficiency: A review. Can. J. Soil Sci. 65:381–409.

Haise, H. R., and R. M. Hagan. 1967. Soil, plant, and evaporative measurements as criteria for scheduling irrigation. *In* Irrigation of Agricultural Lands. R. M. Hagan, et al., eds. Madison: American Society of Agronomy Publications. pp. 577–97.

Hanks, R. J. 1983. Yield and water-use relationships: An overview. *In* Limitations to Efficient Water Use in Crop Production. H. M. Taylor, W. Jordan, and T. Sinclair, eds. Madison: American Society of Agronomy Publications. pp. 393–411.

Appendix 3.6-E

North In-Lieu Project ETc & Effective Rainfall

APPENDIX 3.6-E: NORTH IN-LIEU PROJECT ETc EFFECTIVE RAINFALL

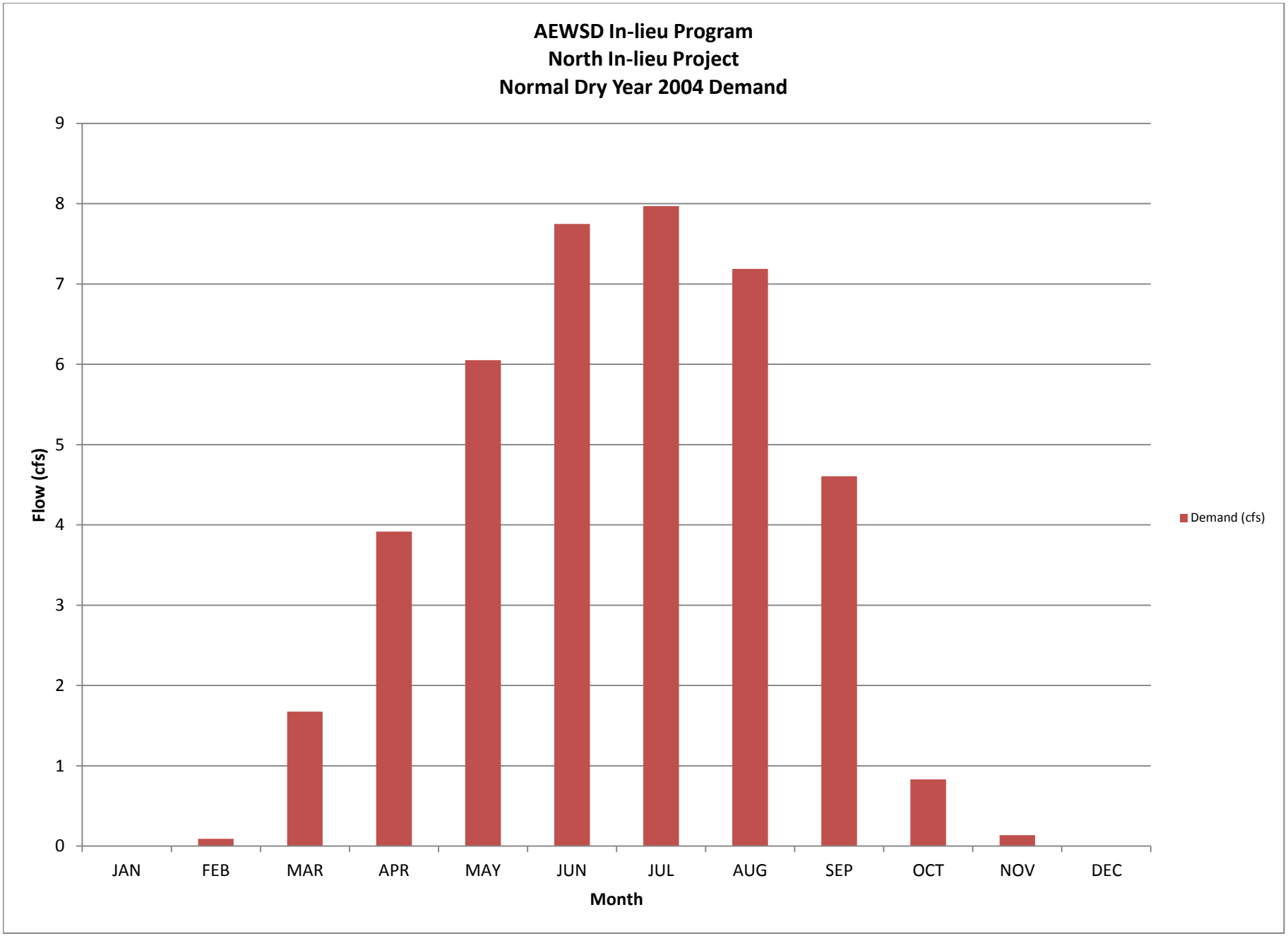

CROP ACREAGES:

Vineyard =	382	acres
Citrus =	0	acres
Deciduous - No Cover =	233	acres
Grain & Hay - Alfalfa =	0	acres
Truck and Field Crops - Potatoes =	9	acres
Pasture =	0	acres

TABLE 1. Input for Monthly ETo and Total Gross Rain

MONTH	ETo (in)	RAIN (in)	% EFF.	EFF. RAIN
JAN	1.16	2.09	68%	1.42
FEB	1.92	1.02	41%	0.42
MAR	4.73	0.47	0%	0.00
APR	6.57	0.00	0%	0.00
MAY	8.33	0.00	0%	0.00
JUN	9.03	0.00	0%	0.00
JUL	9.53	0.00	0%	0.00
AUG	8.74	0.00	0%	0.00
SEP	6.56	0.00	0%	0.00
OCT	3.76	1.34	59%	0.79
NOV	1.87	0.08	0%	0.00
DEC	1.49	1.18	48%	0.57
TOTALS	63.69	6.18		3.20

Effective rainfall is calculated using the work of Mac Gilverrey, CA Department of Water Resources. 1989.

Nov-Feb EFF = -0.54 + (0.94 * GROSS)
Mar-May EFF = -1.07 + (0.837 * GROSS)
Oct EFF = -0.06 + (0.635 * GROSS)

TABLE 2. ETc, With and Without Effective Rain (inches)

	NO RAIN (in)						WITH RAIN (in)					
MONTH	VINEYARD	CITRUS	DECIDUOUS	POTATOES	PASTURE	ALFALFA	VINEYARD	CITRUS	DECIDUOUS	POTATOES	PASTURE	ALFALFA
JAN	0.00	0.75	0.00	0.00	1.04	0.00	-1.42	-0.67	-1.42	-1.42	-0.38	-1.42
FEB	0.00	1.29	0.54	0.86	1.79	0.60	-0.42	0.87	0.12	0.44	1.37	0.18
MAR	0.82	3.07	2.90	3.40	4.26	3.66	0.82	3.07	2.90	3.40	4.26	3.66
APR	3.01	4.27	4.77	7.51	5.91	4.89	3.01	4.27	4.77	7.51	5.91	4.89
MAY	5.34	5.41	7.00	8.46	7.50	6.66	5.34	5.41	7.00	8.46	7.50	6.66
JUN	7.22	5.87	8.13	2.00	8.13	8.74	7.22	5.87	8.13	2.00	8.13	8.74
JUL	7.81	6.19	8.58	0.00	8.58	9.71	7.81	6.19	8.58	0.00	8.58	9.71
AUG	6.94	5.68	7.87	0.00	7.87	8.80	6.94	5.68	7.87	0.00	7.87	8.80
SEP	3.96	4.26	5.44	0.00	5.90	0.00	3.96	4.26	5.44	0.00	5.90	0.00
OCT	1.11	2.44	2.44	0.00	3.38	0.00	0.32	1.65	1.65	-0.79	2.59	-0.79
NOV	0.00	1.22	0.33	0.00	1.68	0.00	0.00	1.22	0.33	0.00	1.68	0.00
DEC	0.00	0.97	0.00	0.00	1.34	0.00	-0.57	0.40	-0.57	-0.57	0.77	-0.57
ANNUAL	36.22	41.44	47.98	22.22	57.38	43.07	33.02	38.24	44.78	19.02	54.18	39.87

Negative values in the W/RAIN column indicate rain potentially going into soil storage.

TABLE 3A. Demand (AF)

	DEMAND						MONTHLY
MONTH	VINEYARD	CITRUS	DECIDUOUS	POTATOES	PASTURE	ALFALFA	DEMAND
JAN	0	0	0	0	0	0	0
FEB	0	0	4	1	0	0	5
MAR	32	0	67	4	0	0	103
APR	114	0	110	9	0	0	233
MAY	201	0	161	10	0	0	372
JUN	271	0	187	3	0	0	461
JUL	293	0	197	0	0	0	490
AUG	261	0	181	0	0	0	442
SEP	149	0	125	0	0	0	274
OCT	13	0	38	0	0	0	51
NOV	0	0	8	0	0	0	8
DEC	0	0	0	0	0	0	0
ANNUAL	1,334	0	1,078	27	0	0	2,439

TABLE 3B. DEMAND (CFS)

	DEMAND						MONTHLY
MONTH	VINEYARD	CITRUS	DECIDUOUS	POTATOES	PASTURE	ALFALFA	DEMAND
JAN	0.00	0.00	0.00	0.00	0.00	0.00	0.00
FEB	0.00	0.00	0.07	0.02	0.00	0.00	0.09
MAR	0.52	0.00	1.09	0.07	0.00	0.00	1.68
APR	1.92	0.00	1.85	0.15	0.00	0.00	3.92
MAY	3.27	0.00	2.62	0.16	0.00	0.00	6.05
JUN	4.55	0.00	3.14	0.05	0.00	0.00	7.75
JUL	4.77	0.00	3.20	0.00	0.00	0.00	7.97
AUG	4.24	0.00	2.94	0.00	0.00	0.00	7.19
SEP	2.50	0.00	2.10	0.00	0.00	0.00	4.60
OCT	0.21	0.00	0.62	0.00	0.00	0.00	0.83
NOV	0.00	0.00	0.13	0.00	0.00	0.00	0.13
DEC	0.00	0.00	0.00	0.00	0.00	0.00	0.00

APPENDIX 3.6-E: NORTH IN-LIEU PROJECT ETc EFFECTIVE RAINFALL

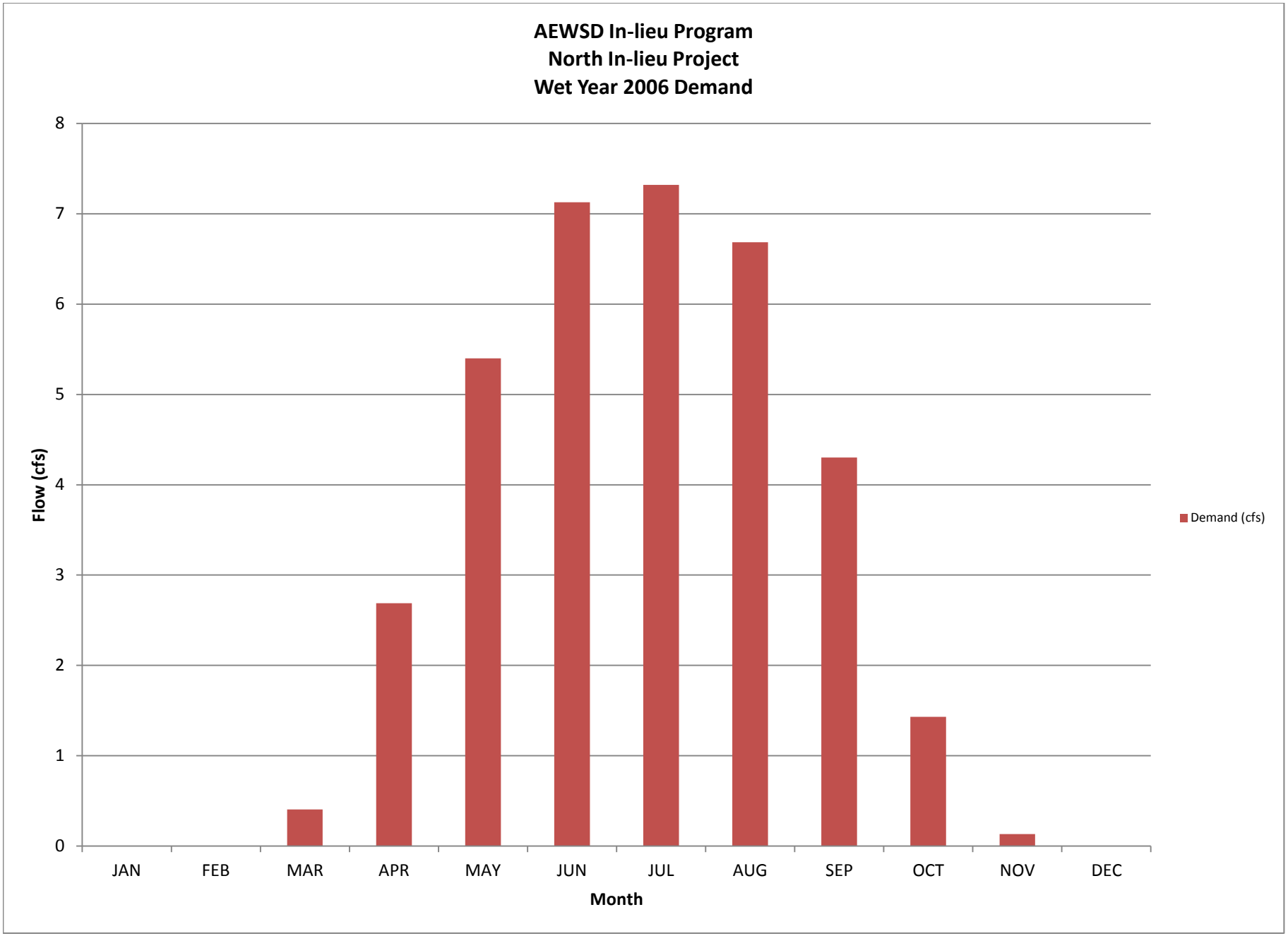

CROP ACREAGES:

Vineyard =	382	acres
Citrus =	0	acres
Deciduous - No Cover =	233	acres
Grain & Hay - Alfalfa =	0	acres
Truck and Field Crops - Potatoes =	9	acres
Pasture =	0	acres

TABLE 1. Input for Monthly ETo and Total Gross Rain

MONTH	ETo (in)	RAIN (in)	% EFF.	EFF. RAIN
JAN	1.67	0.67	13%	0.09
FEB	2.07	2.68	74%	1.98
MAR	3.17	2.44	40%	0.97
APR	4.52	0.75	0%	0.00
MAY	7.44	0.04	0%	0.00
JUN	8.30	0.00	0%	0.00
JUL	8.75	0.00	0%	0.00
AUG	8.14	0.00	0%	0.00
SEP	6.12	0.08	0%	0.00
OCT	3.49	0.20	34%	0.07
NOV	1.87	0.04	0%	0.00
DEC	1.73	1.22	50%	0.61
TOTALS	57.27	8.12		3.72

Effective rainfall is calculated using the work of Mac Gilverrey, CA Department of Water Resources. 1989.

Nov-Feb EFF = -0.54 + (0.94 * GROSS)
Mar-May EFF = -1.07 + (0.837 * GROSS)
Oct EFF = -0.06 + (0.635 * GROSS)

TABLE 2. ETc, With and Without Effective Rain (inches)

	NO RAIN (in)						WITH RAIN (in)					
MONTH	VINEYARD	CITRUS	DECIDUOUS	POTATOES	PASTURE	ALFALFA	VINEYARD	CITRUS	DECIDUOUS	POTATOES	PASTURE	ALFALFA
JAN	0.00	1.09	0.00	0.00	1.50	0.00	-0.09	1.00	-0.09	-0.09	1.41	-0.09
FEB	0.00	1.35	0.54	0.89	1.86	0.60	-1.98	-0.63	-1.44	-1.09	-0.12	-1.38
MAR	0.55	2.06	1.93	2.25	2.85	2.44	-0.42	1.09	0.96	1.28	1.88	1.47
APR	2.07	2.94	3.27	5.16	4.07	3.37	2.07	2.94	3.27	5.16	4.07	3.37
MAY	4.77	4.84	6.25	7.58	6.70	5.95	4.77	4.84	6.25	7.58	6.70	5.95
JUN	6.63	5.40	7.47	1.84	7.47	8.03	6.63	5.40	7.47	1.84	7.47	8.03
JUL	7.18	5.69	7.88	0.00	7.88	8.92	7.18	5.69	7.88	0.00	7.88	8.92
AUG	6.47	5.29	7.33	0.00	7.33	7.88	6.47	5.29	7.33	0.00	7.33	7.88
SEP	3.70	3.98	5.08	0.00	5.51	0.00	3.70	3.98	5.08	0.00	5.51	0.00
OCT	1.03	2.27	2.27	0.00	3.14	0.00	0.96	2.20	2.20	-0.07	3.07	-0.07
NOV	0.00	1.22	0.33	0.00	1.68	0.00	0.00	1.22	0.33	0.00	1.68	0.00
DEC	0.00	1.12	0.00	0.00	1.56	0.00	-0.61	0.52	-0.61	-0.61	0.95	-0.61
ANNUAL	32.39	37.23	42.34	17.72	51.54	37.19	28.68	33.51	38.63	14.00	47.83	33.47

Negative values in the W/RAIN column indicate rain potentially going into soil storage.

TABLE 3A. Demand (AF)

	DEMAND						MONTHLY
MONTH	VINEYARD	CITRUS	DECIDUOUS	POTATOES	PASTURE	ALFALFA	DEMAND
JAN	0	0	0	0	0	0	0
FEB	0	0	0	0	0	0	0
MAR	0	0	23	2	0	0	25
APR	78	0	76	6	0	0	160
MAY	179	0	144	9	0	0	332
JUN	249	0	172	3	0	0	424
JUL	269	0	181	0	0	0	450
AUG	243	0	168	0	0	0	411
SEP	139	0	117	0	0	0	256
OCT	37	0	51	0	0	0	88
NOV	0	0	8	0	0	0	8
DEC	0	0	0	0	0	0	0
ANNUAL	1,194	0	940	20	0	0	2,154

TABLE 3B. DEMAND (CFS)

	DEMAND						MONTHLY
MONTH	VINEYARD	CITRUS	DECIDUOUS	POTATOES	PASTURE	ALFALFA	DEMAND
JAN	0.00	0.00	0.00	0.00	0.00	0.00	0.00
FEB	0.00	0.00	0.00	0.00	0.00	0.00	0.00
MAR	0.00	0.00	0.37	0.03	0.00	0.00	0.41
APR	1.31	0.00	1.28	0.10	0.00	0.00	2.69
MAY	2.91	0.00	2.34	0.15	0.00	0.00	5.40
JUN	4.18	0.00	2.89	0.05	0.00	0.00	7.13
JUL	4.37	0.00	2.94	0.00	0.00	0.00	7.32
AUG	3.95	0.00	2.73	0.00	0.00	0.00	6.68
SEP	2.34	0.00	1.97	0.00	0.00	0.00	4.30
OCT	0.60	0.00	0.83	0.00	0.00	0.00	1.43
NOV	0.00	0.00	0.13	0.00	0.00	0.00	0.13
DEC	0.00	0.00	0.00	0.00	0.00	0.00	0.00

APPENDIX 3.6-E: NORTH IN-LIEU PROJECT ETc EFFECTIVE RAINFALL

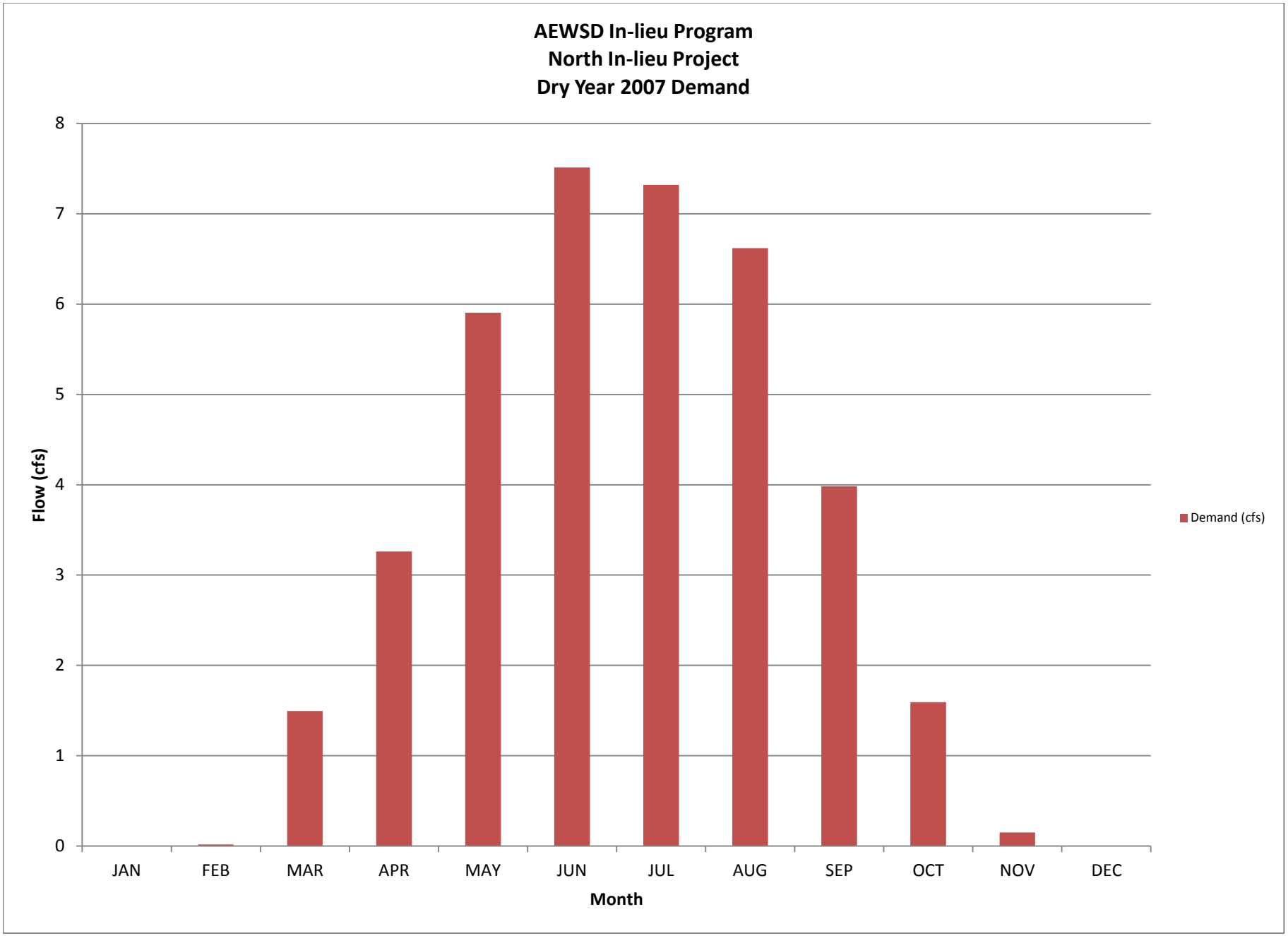

CROP ACREAGES:

Vineyard =	382	acres
Citrus =	0	acres
Deciduous - No Cover =	233	acres
Grain & Hay - Alfalfa =	0	acres
Truck and Field Crops - Potatoes =	9	acres
Pasture =	0	acres

TABLE 1. Input for Monthly ETo and Total Gross Rain

MONTH	ETo (in)	RAIN (in)	% EFF.	EFF. RAIN
JAN	2.01	0.98	39%	0.38
FEB	2.44	1.34	54%	0.72
MAR	4.44	1.38	6%	0.09
APR	5.51	1.26	0%	0.00
MAY	8.15	0.00	0%	0.00
JUN	8.77	0.00	0%	0.00
JUL	8.73	0.00	0%	0.00
AUG	8.06	0.00	0%	0.00
SEP	5.66	0.20	0%	0.00
OCT	3.75	0.00	0%	0.00
NOV	2.06	0.24	0%	0.00
DEC	1.43	0.94	37%	0.34
TOTALS	61.01	6.34		1.53

Effective rainfall is calculated using the work of Mac Gilverrey, CA Department of Water Resources. 1989.

Nov-Feb EFF = -0.54 + (0.94 * GROSS)
Mar-May EFF = -1.07 + (0.837 * GROSS)
Oct EFF = -0.06 + (0.635 * GROSS)

TABLE 2. ETc, With and Without Effective Rain (inches)

	NO RAIN (in)						WITH RAIN (in)					
MONTH	VINEYARD	CITRUS	DECIDUOUS	POTATOES	PASTURE	ALFALFA	VINEYARD	CITRUS	DECIDUOUS	POTATOES	PASTURE	ALFALFA
JAN	0.00	1.31	0.00	0.00	1.81	0.00	-0.38	0.93	-0.38	-0.38	1.43	-0.38
FEB	0.00	1.59	0.64	1.05	2.20	0.71	-0.72	0.87	-0.08	0.33	1.48	-0.01
MAR	0.77	2.89	2.71	3.15	4.00	3.42	0.69	2.80	2.62	3.06	3.91	3.34
APR	2.53	3.58	3.99	6.29	4.96	4.10	2.53	3.58	3.99	6.29	4.96	4.10
MAY	5.22	5.30	6.84	8.30	7.34	6.52	5.22	5.30	6.84	8.30	7.34	6.52
JUN	7.01	5.70	7.89	1.95	7.89	8.49	7.01	5.70	7.89	1.95	7.89	8.49
JUL	7.16	5.67	7.86	0.00	7.86	8.90	7.16	5.67	7.86	0.00	7.86	8.90
AUG	6.40	5.24	7.25	0.00	7.25	7.80	6.40	5.24	7.25	0.00	7.25	7.80
SEP	3.42	3.68	4.70	0.00	5.09	0.00	3.42	3.68	4.70	0.00	5.09	0.00
OCT	1.11	2.44	2.43	0.00	3.38	0.00	1.11	2.44	2.43	0.00	3.38	0.00
NOV	0.00	1.34	0.36	0.00	1.85	0.00	0.00	1.34	0.36	0.00	1.85	0.00
DEC	0.00	0.93	0.00	0.00	1.29	0.00	-0.34	0.59	-0.34	-0.34	0.94	-0.34
ANNUAL	33.62	39.66	44.68	20.74	54.91	39.94	32.09	38.13	43.15	19.21	53.38	38.41

Negative values in the W/RAIN column indicate rain potentially going into soil storage.

TABLE 3A. Demand (AF)

	DEMAND						MONTHLY
MONTH	VINEYARD	CITRUS	DECIDUOUS	POTATOES	PASTURE	ALFALFA	DEMAND
JAN	0	0	0	0	0	0	0
FEB	0	0	0	1	0	0	1
MAR	27	0	61	4	0	0	92
APR	95	0	92	7	0	0	194
MAY	196	0	157	10	0	0	363
JUN	263	0	181	3	0	0	447
JUL	269	0	181	0	0	0	450
AUG	240	0	167	0	0	0	407
SEP	129	0	108	0	0	0	237
OCT	42	0	56	0	0	0	98
NOV	0	0	9	0	0	0	9
DEC	0	0	0	0	0	0	0
ANNUAL	1,261	0	1,012	25	0	0	2,298

TABLE 3B. DEMAND (CFS)

	DEMAND						MONTHLY
MONTH	VINEYARD	CITRUS	DECIDUOUS	POTATOES	PASTURE	ALFALFA	DEMAND
JAN	0.00	0.00	0.00	0.00	0.00	0.00	0.00
FEB	0.00	0.00	0.00	0.02	0.00	0.00	0.02
MAR	0.44	0.00	0.99	0.07	0.00	0.00	1.50
APR	1.60	0.00	1.55	0.12	0.00	0.00	3.26
MAY	3.19	0.00	2.55	0.16	0.00	0.00	5.90
JUN	4.42	0.00	3.04	0.05	0.00	0.00	7.51
JUL	4.37	0.00	2.94	0.00	0.00	0.00	7.32
AUG	3.90	0.00	2.72	0.00	0.00	0.00	6.62
SEP	2.17	0.00	1.82	0.00	0.00	0.00	3.98
OCT	0.68	0.00	0.91	0.00	0.00	0.00	1.59
NOV	0.00	0.00	0.15	0.00	0.00	0.00	0.15
DEC	0.00	0.00	0.00	0.00	0.00	0.00	0.00

APPENDIX 3.6-E: NORTH IN-LIEU PROJECT ETc EFFECTIVE RAINFALL

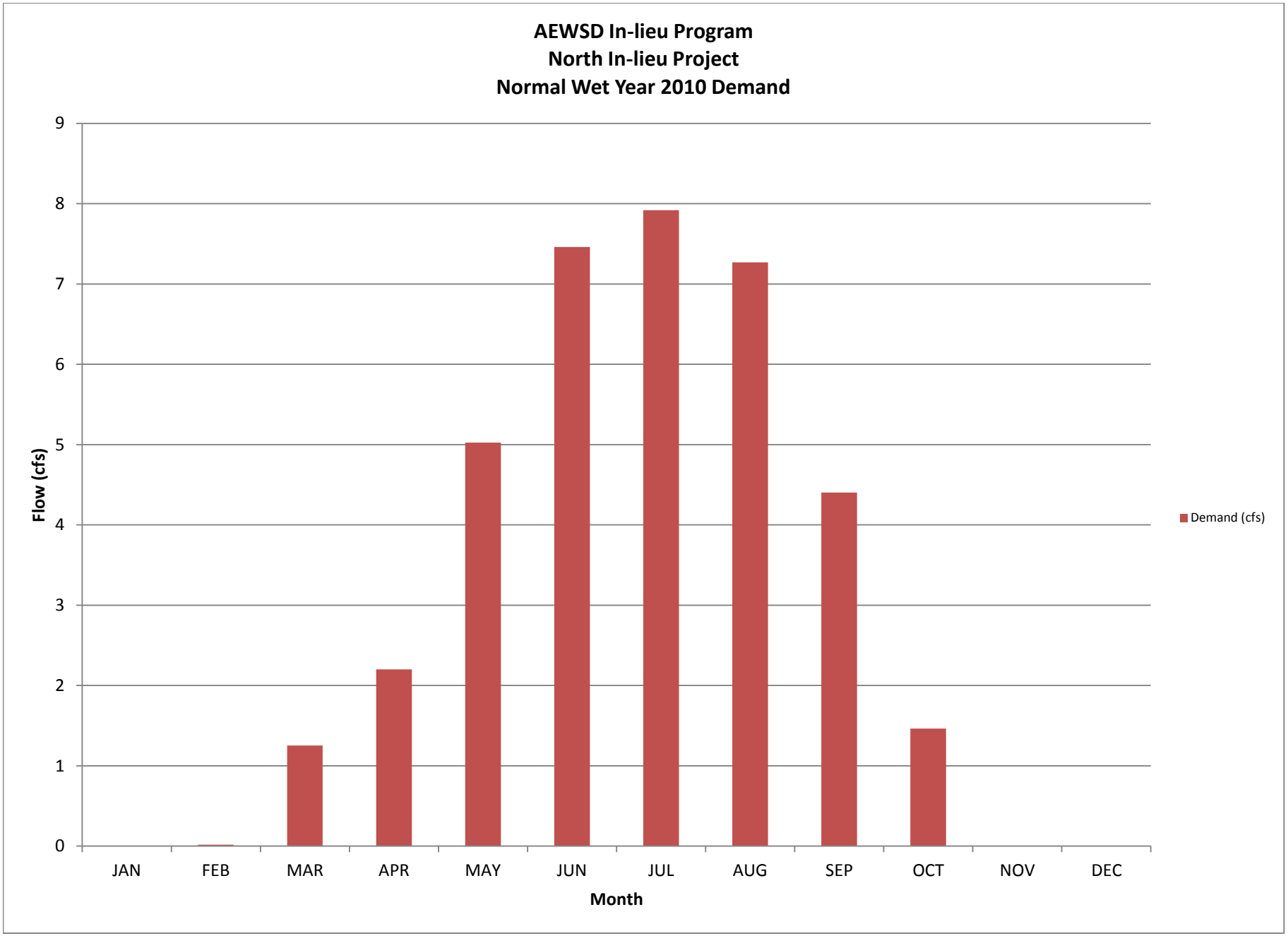

CROP ACREAGES:

Vineyard =	382	acres
Citrus =	0	acres
Deciduous - No Cover =	233	acres
Grain & Hay - Alfalfa =	0	acres
Truck and Field Crops - Potatoes =	9	acres
Pasture =	0	acres

TABLE 1. Input for Monthly ETo and Total Gross Rain

MONTH	ETo (in)	RAIN (in)	% EFF.	EFF. RAIN
JAN	1.21	0.59	2%	0.01
FEB	2.48	1.34	54%	0.72
MAR	3.56	1.10	0%	0.00
APR	4.61	1.93	28%	0.55
MAY	6.99	1.34	4%	0.05
JUN	8.70	0.00	0%	0.00
JUL	9.47	0.08	0%	0.00
AUG	8.86	0.00	0%	0.00
SEP	6.26	0.00	0%	0.00
OCT	3.70	0.28	42%	0.12
NOV	2.20	1.02	41%	0.42
DEC	1.21	5.63	84%	4.75
TOTALS	59.25	13.31		6.62

Effective rainfall is calculated using the work of Mac Gilverrey, CA Department of Water Resources. 1989.

Nov-Feb EFF = -0.54 + (0.94 * GROSS)
Mar-May EFF = -1.07 + (0.837 * GROSS)
Oct EFF = -0.06 + (0.635 * GROSS)

TABLE 2. ETc, With and Without Effective Rain (inches)

	NO RAIN (in)						WITH RAIN (in)					
MONTH	VINEYARD	CITRUS	DECIDUOUS	POTATOES	PASTURE	ALFALFA	VINEYARD	CITRUS	DECIDUOUS	POTATOES	PASTURE	ALFALFA
JAN	0.00	0.79	0.00	0.00	1.09	0.00	-0.01	0.77	-0.01	-0.01	1.07	-0.01
FEB	0.00	1.61	0.65	1.07	2.23	0.72	-0.72	0.89	-0.07	0.35	1.51	0.00
MAR	0.62	2.31	2.17	2.52	3.20	2.75	0.62	2.31	2.17	2.52	3.20	2.75
APR	2.11	3.00	3.34	5.26	4.15	3.43	1.57	2.45	2.79	4.72	3.60	2.89
MAY	4.48	4.54	5.87	7.12	6.29	5.59	4.43	4.49	5.82	7.07	6.24	5.54
JUN	6.95	5.66	7.83	1.93	7.83	8.42	6.95	5.66	7.83	1.93	7.83	8.42
JUL	7.77	6.16	8.52	0.00	8.52	9.65	7.77	6.16	8.52	0.00	8.52	9.65
AUG	7.04	5.76	7.97	0.00	7.97	8.57	7.04	5.76	7.97	0.00	7.97	8.57
SEP	3.78	4.07	5.20	0.00	5.63	0.00	3.78	4.07	5.20	0.00	5.63	0.00
OCT	1.09	2.41	2.40	0.00	3.33	0.00	0.97	2.29	2.28	-0.12	3.21	-0.12
NOV	0.00	1.43	0.39	0.00	1.98	0.00	-0.42	1.01	-0.03	-0.42	1.56	-0.42
DEC	0.00	0.79	0.00	0.00	1.09	0.00	-4.75	-3.97	-4.75	-4.75	-3.66	-4.75
ANNUAL	33.84	38.51	44.34	17.90	53.33	39.13	27.22	31.89	37.72	11.28	46.71	32.51

Negative values in the W/RAIN column indicate rain potentially going into soil storage.

TABLE 3A. Demand (AF)

	DEMAND						MONTHLY
MONTH	VINEYARD	CITRUS	DECIDUOUS	POTATOES	PASTURE	ALFALFA	DEMAND
JAN	0	0	0	0	0	0	0
FEB	0	0	0	1	0	0	1
MAR	24	0	50	3	0	0	77
APR	60	0	65	6	0	0	131
MAY	167	0	134	8	0	0	309
JUN	261	0	180	3	0	0	444
JUL	291	0	196	0	0	0	487
AUG	264	0	183	0	0	0	447
SEP	142	0	120	0	0	0	262
OCT	37	0	53	0	0	0	90
NOV	0	0	0	0	0	0	0
DEC	0	0	0	0	0	0	0
ANNUAL	1,246	0	981	21	0	0	2,248

TABLE 3B. DEMAND (CFS)

	DEMAND						MONTHLY
MONTH	VINEYARD	CITRUS	DECIDUOUS	POTATOES	PASTURE	ALFALFA	DEMAND
JAN	0.00	0.00	0.00	0.00	0.00	0.00	0.00
FEB	0.00	0.00	0.00	0.02	0.00	0.00	0.02
MAR	0.39	0.00	0.81	0.05	0.00	0.00	1.25
APR	1.01	0.00	1.09	0.10	0.00	0.00	2.20
MAY	2.72	0.00	2.18	0.13	0.00	0.00	5.03
JUN	4.39	0.00	3.03	0.05	0.00	0.00	7.46
JUL	4.73	0.00	3.19	0.00	0.00	0.00	7.92
AUG	4.29	0.00	2.98	0.00	0.00	0.00	7.27
SEP	2.39	0.00	2.02	0.00	0.00	0.00	4.40
OCT	0.60	0.00	0.86	0.00	0.00	0.00	1.46
NOV	0.00	0.00	0.00	0.00	0.00	0.00	0.00
DEC	0.00	0.00	0.00	0.00	0.00	0.00	0.00

APPENDIX 3.6-E: NORTH IN-LIEU PROJECT ETc EFFECTIVE RAINFALL

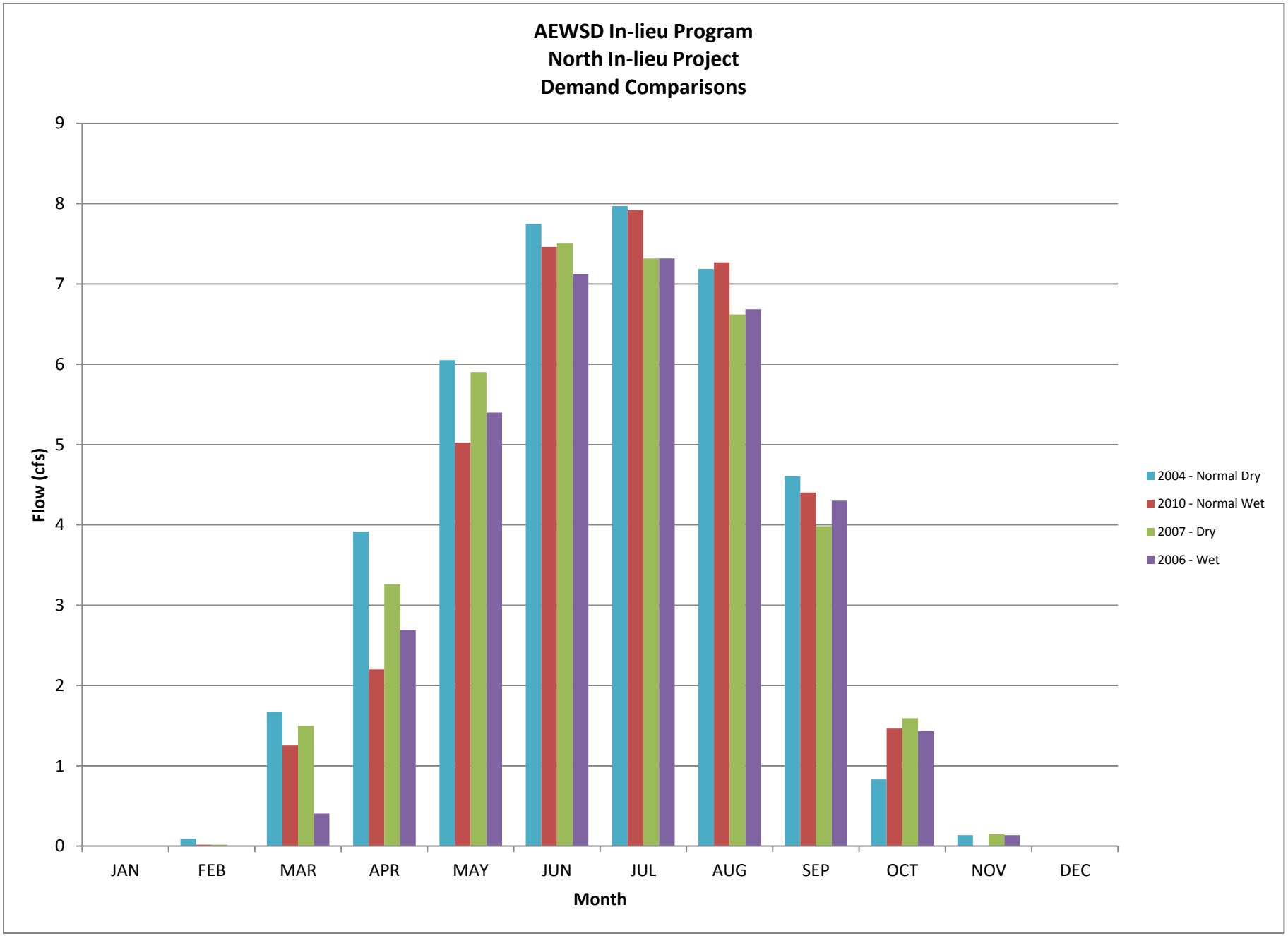

Appendix 3.6-F

Sycamore In-Lieu Project ETc and Effective Rainfall

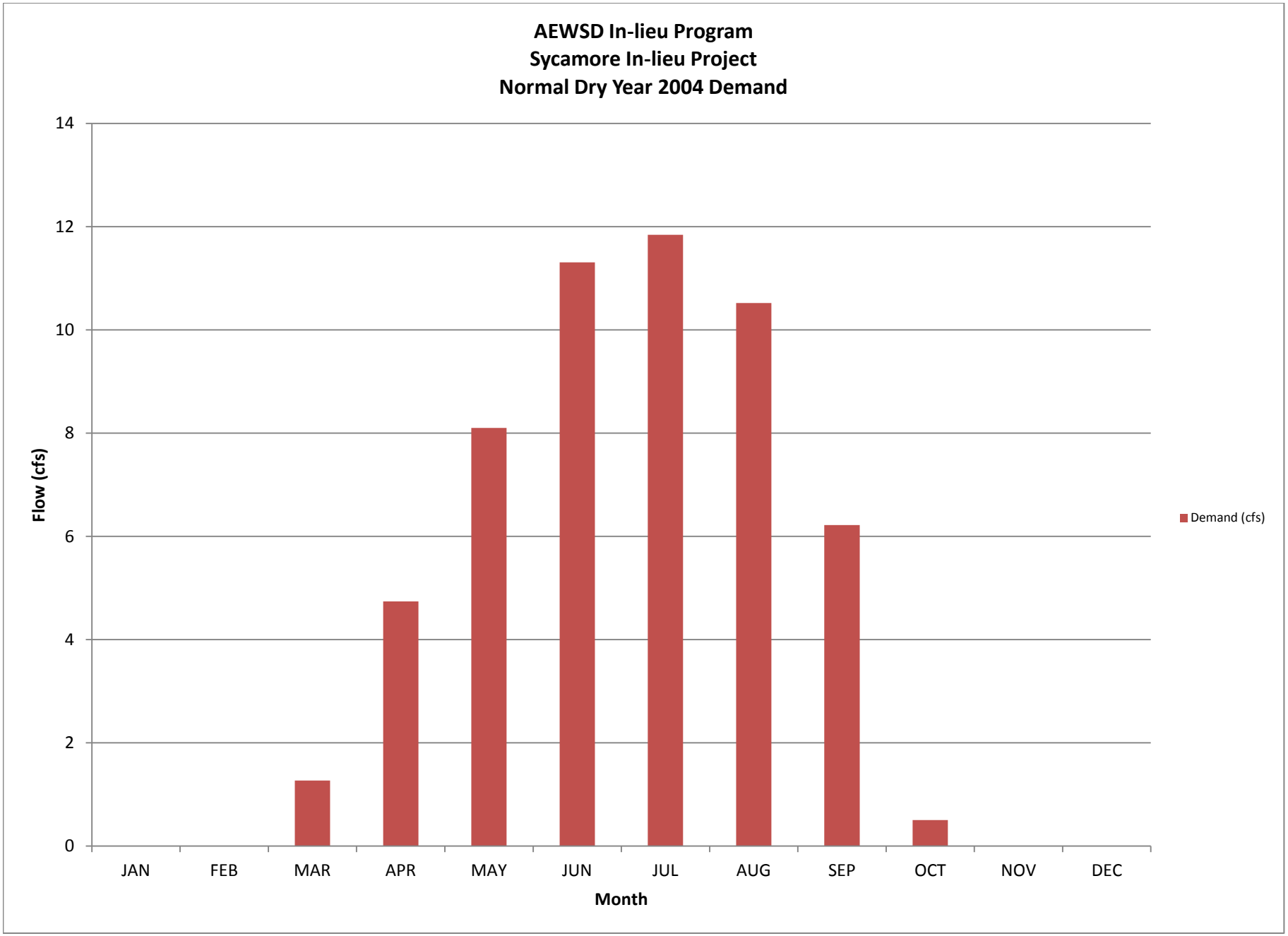
AEWSD In-lieu Program
Sycamore In-lieu Project
Normal Dry Year 2004 Demand
Flow (cfs)
0
2
4
6
8
10
12
14
JAN
FEB
MAR
APR
MAY
JUN
JUL
AUG
SEP
OCT
NOV
DEC
Month
Demand (cfs)

CROP ACREAGES:

Vineyard =	949	acres
Citrus =	0	acres
Deciduous - No Cover =	0	acres
Grain & Hay - Alfalfa =	0	acres
Truck and Field Crops - Potatoes =	0	acres
Pasture =	0	acres

TABLE 1. Input for Monthly ETo and Total Gross Rain

MONTH	ETo (in)	RAIN (in)	% EFF.	EFF. RAIN
JAN	1.16	2.09	68%	1.42
FEB	1.92	1.02	41%	0.42
MAR	4.73	0.47	0%	0.00
APR	6.57	0.00	0%	0.00
MAY	8.33	0.00	0%	0.00
JUN	9.03	0.00	0%	0.00
JUL	9.53	0.00	0%	0.00
AUG	8.74	0.00	0%	0.00
SEP	6.56	0.00	0%	0.00
OCT	3.76	1.34	59%	0.79
NOV	1.87	0.08	0%	0.00
DEC	1.49	1.18	48%	0.57
TOTALS	63.69	6.18		3.20

Effective rainfall is calculated using the work of Mac Gilverrey, CA Department of Water Resources. 1989.

Nov-Feb EFF = -0.54 + (0.94 * GROSS)
Mar-May EFF = -1.07 + (0.837 * GROSS)
Oct EFF = -0.06 + (0.635 * GROSS)

TABLE 2. ETc, With and Without Effective Rain (inches)

	NO RAIN (in)						WITH RAIN (in)					
MONTH	VINEYARD	CITRUS	DECIDUOUS	POTATOES	PASTURE	ALFALFA	VINEYARD	CITRUS	DECIDUOUS	POTATOES	PASTURE	ALFALFA
JAN	0.00	0.75	0.00	0.00	1.04	0.00	-1.42	-0.67	-1.42	-1.42	-0.38	-1.42
FEB	0.00	1.29	0.54	0.86	1.79	0.60	-0.42	0.87	0.12	0.44	1.37	0.18
MAR	0.82	3.07	2.90	3.40	4.26	3.66	0.82	3.07	2.90	3.40	4.26	3.66
APR	3.01	4.27	4.77	7.51	5.91	4.89	3.01	4.27	4.77	7.51	5.91	4.89
MAY	5.34	5.41	7.00	8.46	7.50	6.66	5.34	5.41	7.00	8.46	7.50	6.66
JUN	7.22	5.87	8.13	2.00	8.13	8.74	7.22	5.87	8.13	2.00	8.13	8.74
JUL	7.81	6.19	8.58	0.00	8.58	9.71	7.81	6.19	8.58	0.00	8.58	9.71
AUG	6.94	5.68	7.87	0.00	7.87	8.80	6.94	5.68	7.87	0.00	7.87	8.80
SEP	3.96	4.26	5.44	0.00	5.90	0.00	3.96	4.26	5.44	0.00	5.90	0.00
OCT	1.11	2.44	2.44	0.00	3.38	0.00	0.32	1.65	1.65	-0.79	2.59	-0.79
NOV	0.00	1.22	0.33	0.00	1.68	0.00	0.00	1.22	0.33	0.00	1.68	0.00
DEC	0.00	0.97	0.00	0.00	1.34	0.00	-0.57	0.40	-0.57	-0.57	0.77	-0.57
ANNUAL	36.22	41.44	47.98	22.22	57.38	43.07	33.02	38.24	44.78	19.02	54.18	39.87

Negative values in the W/RAIN column indicate rain potentially going into soil storage.

TABLE 3A. Demand (AF)

	DEMAND						MONTHLY	MONTHLY
MONTH	VINEYARD	CITRUS	DECIDUOUS	POTATOES	PASTURE	ALFALFA	DEMAND	DEMAND [1/]
JAN	0	0	0	0	0	0	0	0
FEB	0	0	0	0	0	0	0	0
MAR	78	0	0	0	0	0	78	0
APR	282	0	0	0	0	0	282	0
MAY	498	0	0	0	0	0	498	0
JUN	673	0	0	0	0	0	673	173
JUL	728	0	0	0	0	0	728	212
AUG	647	0	0	0	0	0	647	131
SEP	370	0	0	0	0	0	370	0
OCT	31	0	0	0	0	0	31	0
NOV	0	0	0	0	0	0	0	0
DEC	0	0	0	0	0	0	0	0
ANNUAL	3,307	0	0	0	0	0	3,307	515

TABLE 3B. DEMAND (CFS)

	DEMAND						MONTHLY	MONTHLY
MONTH	VINEYARD	CITRUS	DECIDUOUS	POTATOES	PASTURE	ALFALFA	DEMAND	DEMAND [1/]
JAN	0.00	0.00	0.00	0.00	0.00	0.00	0.00	0.00
FEB	0.00	0.00	0.00	0.00	0.00	0.00	0.00	0.00
MAR	1.27	0.00	0.00	0.00	0.00	0.00	1.27	0.00
APR	4.74	0.00	0.00	0.00	0.00	0.00	4.74	0.00
MAY	8.10	0.00	0.00	0.00	0.00	0.00	8.10	0.00
JUN	11.31	0.00	0.00	0.00	0.00	0.00	11.31	2.91
JUL	11.84	0.00	0.00	0.00	0.00	0.00	11.84	3.44
AUG	10.52	0.00	0.00	0.00	0.00	0.00	10.52	2.12
SEP	6.22	0.00	0.00	0.00	0.00	0.00	6.22	0.00
OCT	0.50	0.00	0.00	0.00	0.00	0.00	0.50	0.00
NOV	0.00	0.00	0.00	0.00	0.00	0.00	0.00	0.00
DEC	0.00	0.00	0.00	0.00	0.00	0.00	0.00	0.00

[1/] Monthly demand less existing turnout capacity

APPENDIX 3.6-F: SYCAMORE IN-LIEU PROJECT ETc EFFECTIVE RAINFALL

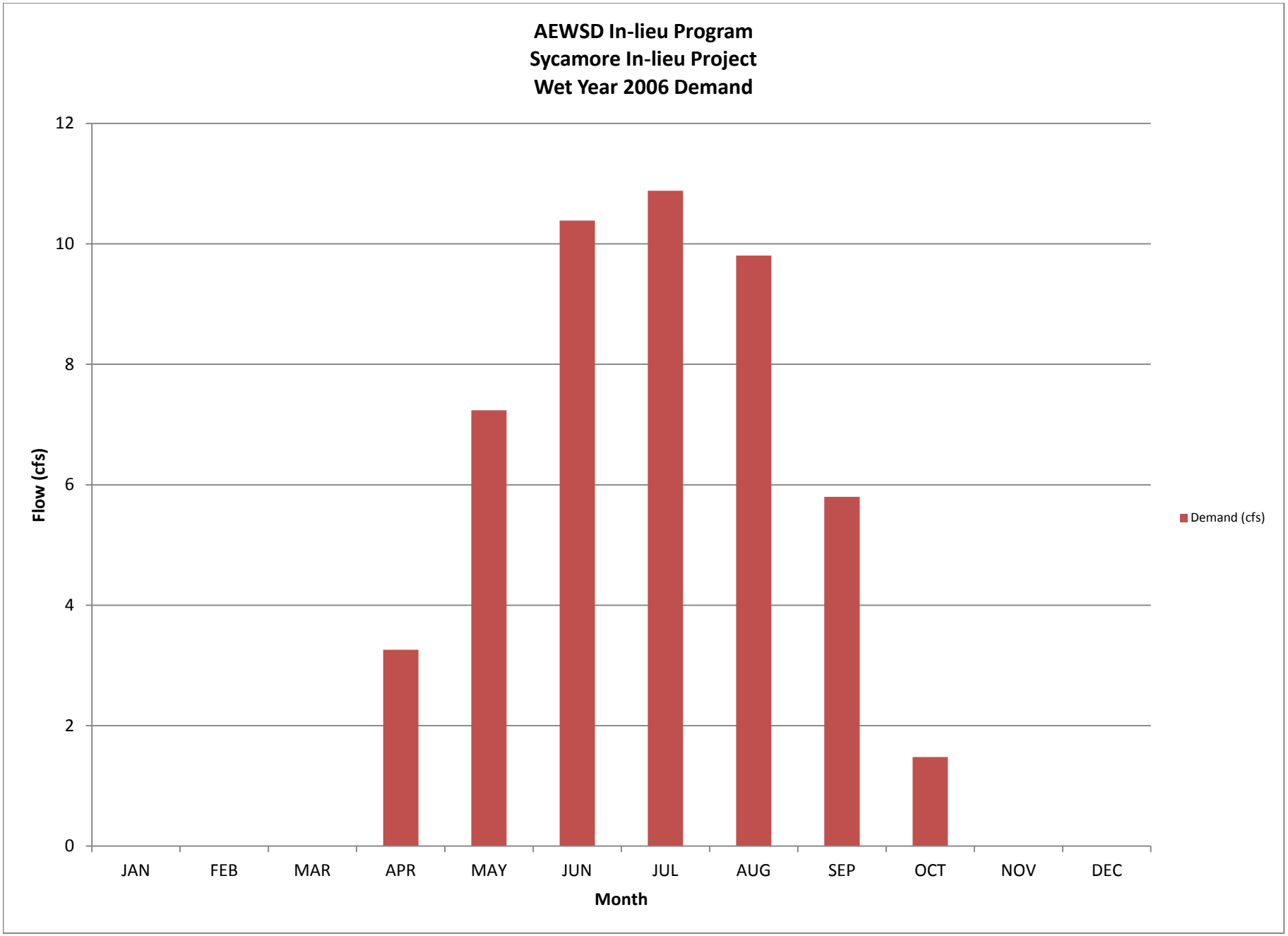

TABLE 1. Input for Monthly ETo and Total Gross Rain

MONTH	ETo (in)	RAIN (in)	% EFF.	EFF. RAIN
JAN	1.67	0.67	13%	0.09
FEB	2.07	2.68	74%	1.98
MAR	3.17	2.44	40%	0.97
APR	4.52	0.75	0%	0.00
MAY	7.44	0.04	0%	0.00
JUN	8.30	0.00	0%	0.00
JUL	8.75	0.00	0%	0.00
AUG	8.14	0.00	0%	0.00
SEP	6.12	0.08	0%	0.00
OCT	3.49	0.20	34%	0.07
NOV	1.87	0.04	0%	0.00
DEC	1.73	1.22	50%	0.61
TOTALS	57.27	8.12		3.72

CROP ACREAGES:

Vineyard =	949	acres
Citrus =	0	acres
Deciduous - No Cover =	0	acres
Grain & Hay - Alfalfa =	0	acres
Truck and Field Crops - Potatoes =	0	acres
Pasture =	0	acres

Effective rainfall is calculated using the work of Mac Gilverrey, CA Department of Water Resources. 1989.

Nov-Feb EFF = -0.54 + (0.94 * GROSS)
Mar-May EFF = -1.07 + (0.837 * GROSS)
Oct EFF = -0.06 + (0.635 * GROSS)

TABLE 2. ETc, With and Without Effective Rain (inches)

	NO RAIN (in)						WITH RAIN (in)					
MONTH	VINEYARD	CITRUS	DECIDUOUS	POTATOES	PASTURE	ALFALFA	VINEYARD	CITRUS	DECIDUOUS	POTATOES	PASTURE	ALFALFA
JAN	0.00	1.09	0.00	0.00	1.50	0.00	-0.09	1.00	-0.09	-0.09	1.41	-0.09
FEB	0.00	1.35	0.54	0.89	1.86	0.60	-1.98	-0.63	-1.44	-1.09	-0.12	-1.38
MAR	0.55	2.06	1.93	2.25	2.85	2.44	-0.42	1.09	0.96	1.28	1.88	1.47
APR	2.07	2.94	3.27	5.16	4.07	3.37	2.07	2.94	3.27	5.16	4.07	3.37
MAY	4.77	4.84	6.25	7.58	6.70	5.95	4.77	4.84	6.25	7.58	6.70	5.95
JUN	6.63	5.40	7.47	1.84	7.47	8.03	6.63	5.40	7.47	1.84	7.47	8.03
JUL	7.18	5.69	7.88	0.00	7.88	8.92	7.18	5.69	7.88	0.00	7.88	8.92
AUG	6.47	5.29	7.33	0.00	7.33	7.88	6.47	5.29	7.33	0.00	7.33	7.88
SEP	3.70	3.98	5.08	0.00	5.51	0.00	3.70	3.98	5.08	0.00	5.51	0.00
OCT	1.03	2.27	2.27	0.00	3.14	0.00	0.96	2.20	2.20	-0.07	3.07	-0.07
NOV	0.00	1.22	0.33	0.00	1.68	0.00	0.00	1.22	0.33	0.00	1.68	0.00
DEC	0.00	1.12	0.00	0.00	1.56	0.00	-0.61	0.52	-0.61	-0.61	0.95	-0.61
ANNUAL	32.39	37.23	42.34	17.72	51.54	37.19	28.68	33.51	38.63	14.00	47.83	33.47

Negative values in the W/RAIN column indicate rain potentially going into soil storage.

TABLE 3A. Demand (AF)

	DEMAND						MONTHLY	MONTHLY
MONTH	VINEYARD	CITRUS	DECIDUOUS	POTATOES	PASTURE	ALFALFA	DEMAND	DEMAND [1/]
JAN	0	0	0	0	0	0	0	0
FEB	0	0	0	0	0	0	0	0
MAR	0	0	0	0	0	0	0	0
APR	194	0	0	0	0	0	194	0
MAY	445	0	0	0	0	0	445	0
JUN	618	0	0	0	0	0	618	118
JUL	669	0	0	0	0	0	669	153
AUG	603	0	0	0	0	0	603	87
SEP	345	0	0	0	0	0	345	0
OCT	91	0	0	0	0	0	91	0
NOV	0	0	0	0	0	0	0	0
DEC	0	0	0	0	0	0	0	0
ANNUAL	2,965	0	0	0	0	0	2,965	357

TABLE 3B. DEMAND (CFS)

	DEMAND						MONTHLY
MONTH	VINEYARD	CITRUS	DECIDUOUS	POTATOES	PASTURE	ALFALFA	DEMAND
JAN	0.00	0.00	0.00	0.00	0.00	0.00	0.00
FEB	0.00	0.00	0.00	0.00	0.00	0.00	0.00
MAR	0.00	0.00	0.00	0.00	0.00	0.00	0.00
APR	3.26	0.00	0.00	0.00	0.00	0.00	3.26
MAY	7.24	0.00	0.00	0.00	0.00	0.00	7.24
JUN	10.39	0.00	0.00	0.00	0.00	0.00	10.39
JUL	10.88	0.00	0.00	0.00	0.00	0.00	10.88
AUG	9.81	0.00	0.00	0.00	0.00	0.00	9.81
SEP	5.80	0.00	0.00	0.00	0.00	0.00	5.80
OCT	1.48	0.00	0.00	0.00	0.00	0.00	1.48
NOV	0.00	0.00	0.00	0.00	0.00	0.00	0.00
DEC	0.00	0.00	0.00	0.00	0.00	0.00	0.00

[1/] Monthly demand less existing turnout capacity

APPENDIX 3.6-F: SYCAMORE IN-LIEU PROJECT ETc EFFECTIVE RAINFALL

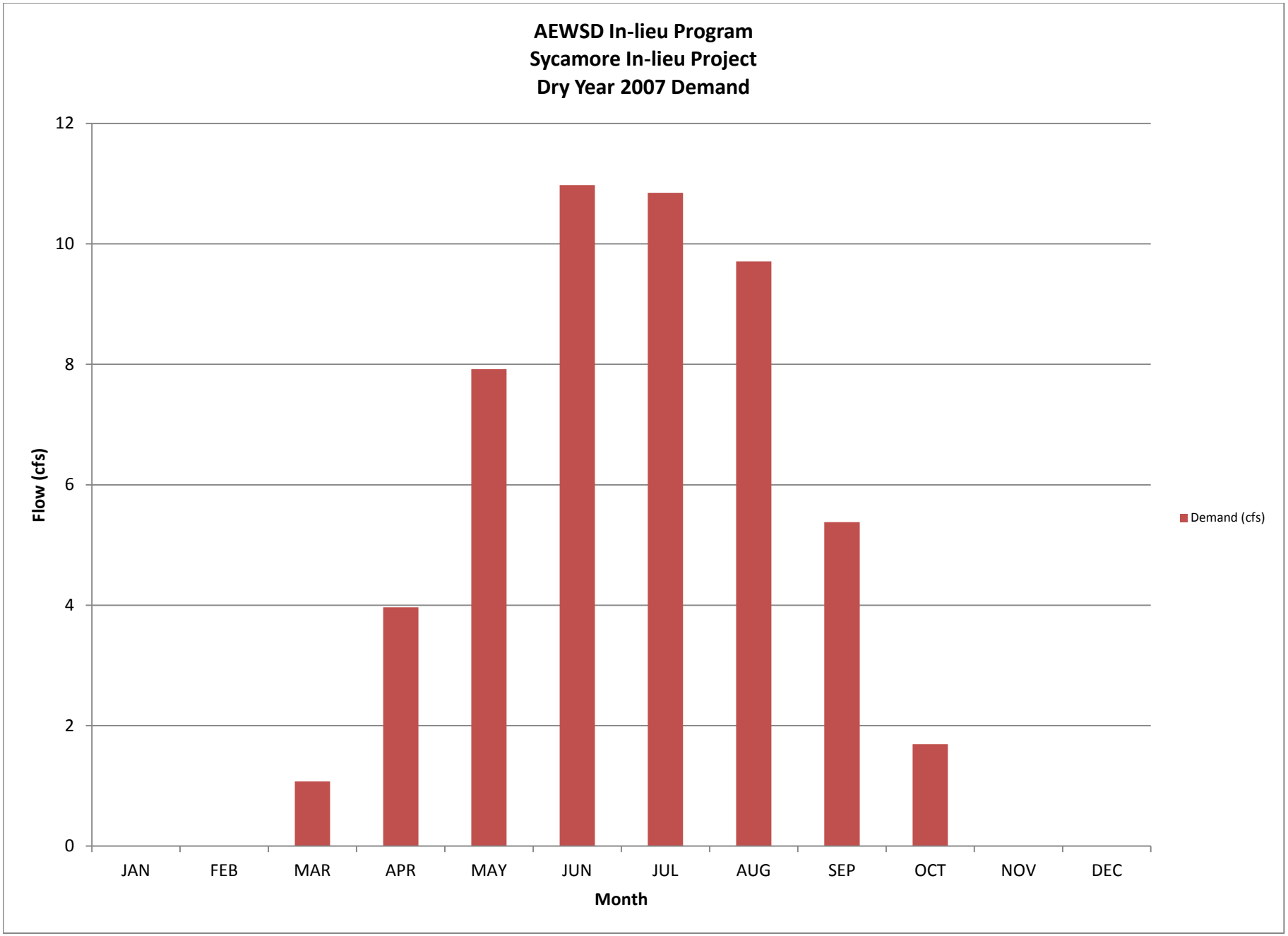

TABLE 1. Input for Monthly ETo and Total Gross Rain

MONTH	ETo (in)	RAIN (in)	% EFF.	EFF. RAIN
JAN	2.01	0.98	39%	0.38
FEB	2.44	1.34	54%	0.72
MAR	4.44	1.38	6%	0.09
APR	5.51	1.26	0%	0.00
MAY	8.15	0.00	0%	0.00
JUN	8.77	0.00	0%	0.00
JUL	8.73	0.00	0%	0.00
AUG	8.06	0.00	0%	0.00
SEP	5.66	0.20	0%	0.00
OCT	3.75	0.00	0%	0.00
NOV	2.06	0.24	0%	0.00
DEC	1.43	0.94	37%	0.34
TOTALS	61.01	6.34		1.53

CROP ACREAGES:

Vineyard =	949	acres
Citrus =	0	acres
Deciduous - No Cover =	0	acres
Grain & Hay - Alfalfa =	0	acres
Truck and Field Crops - Potatoes =	0	acres
Pasture =	0	acres

Effective rainfall is calculated using the work of Mac Gilverrey, CA Department of Water Resources. 1989.

Nov-Feb EFF = -0.54 + (0.94 * GROSS)
Mar-May EFF = -1.07 + (0.837 * GROSS)
Oct EFF = -0.06 + (0.635 * GROSS)

TABLE 2. ETc, With and Without Effective Rain (inches)

	NO RAIN (in)						WITH RAIN (in)					
MONTH	VINEYARD	CITRUS	DECIDUOUS	POTATOES	PASTURE	ALFALFA	VINEYARD	CITRUS	DECIDUOUS	POTATOES	PASTURE	ALFALFA
JAN	0.00	1.31	0.00	0.00	1.81	0.00	-0.38	0.93	-0.38	-0.38	1.43	-0.38
FEB	0.00	1.59	0.64	1.05	2.20	0.71	-0.72	0.87	-0.08	0.33	1.48	-0.01
MAR	0.77	2.89	2.71	3.15	4.00	3.42	0.69	2.80	2.62	3.06	3.91	3.34
APR	2.53	3.58	3.99	6.29	4.96	4.10	2.53	3.58	3.99	6.29	4.96	4.10
MAY	5.22	5.30	6.84	8.30	7.34	6.52	5.22	5.30	6.84	8.30	7.34	6.52
JUN	7.01	5.70	7.89	1.95	7.89	8.49	7.01	5.70	7.89	1.95	7.89	8.49
JUL	7.16	5.67	7.86	0.00	7.86	8.90	7.16	5.67	7.86	0.00	7.86	8.90
AUG	6.40	5.24	7.25	0.00	7.25	7.80	6.40	5.24	7.25	0.00	7.25	7.80
SEP	3.42	3.68	4.70	0.00	5.09	0.00	3.42	3.68	4.70	0.00	5.09	0.00
OCT	1.11	2.44	2.43	0.00	3.38	0.00	1.11	2.44	2.43	0.00	3.38	0.00
NOV	0.00	1.34	0.36	0.00	1.85	0.00	0.00	1.34	0.36	0.00	1.85	0.00
DEC	0.00	0.93	0.00	0.00	1.29	0.00	-0.34	0.59	-0.34	-0.34	0.94	-0.34
ANNUAL	33.62	39.66	44.68	20.74	54.91	39.94	32.09	38.13	43.15	19.21	53.38	38.41

Negative values in the W/RAIN column indicate rain potentially going into soil storage.

TABLE 3A. Demand (AF)

	DEMAND						MONTHLY	MONTHLY
MONTH	VINEYARD	CITRUS	DECIDUOUS	POTATOES	PASTURE	ALFALFA	DEMAND	DEMAND [1/]
JAN	0	0	0	0	0	0	0	0
FEB	0	0	0	0	0	0	0	0
MAR	66	0	0	0	0	0	66	0
APR	236	0	0	0	0	0	236	0
MAY	487	0	0	0	0	0	487	0
JUN	653	0	0	0	0	0	653	153
JUL	667	0	0	0	0	0	667	151
AUG	597	0	0	0	0	0	597	81
SEP	320	0	0	0	0	0	320	0
OCT	104	0	0	0	0	0	104	0
NOV	0	0	0	0	0	0	0	0
DEC	0	0	0	0	0	0	0	0
ANNUAL	3,130	0	0	0	0	0	3,130	384

TABLE 3B. DEMAND (CFS)

	DEMAND						MONTHLY
MONTH	VINEYARD	CITRUS	DECIDUOUS	POTATOES	PASTURE	ALFALFA	DEMAND
JAN	0.00	0.00	0.00	0.00	0.00	0.00	0.00
FEB	0.00	0.00	0.00	0.00	0.00	0.00	0.00
MAR	1.07	0.00	0.00	0.00	0.00	0.00	1.07
APR	3.97	0.00	0.00	0.00	0.00	0.00	3.97
MAY	7.92	0.00	0.00	0.00	0.00	0.00	7.92
JUN	10.97	0.00	0.00	0.00	0.00	0.00	10.97
JUL	10.85	0.00	0.00	0.00	0.00	0.00	10.85
AUG	9.71	0.00	0.00	0.00	0.00	0.00	9.71
SEP	5.38	0.00	0.00	0.00	0.00	0.00	5.38
OCT	1.69	0.00	0.00	0.00	0.00	0.00	1.69
NOV	0.00	0.00	0.00	0.00	0.00	0.00	0.00
DEC	0.00	0.00	0.00	0.00	0.00	0.00	0.00

[1/] Monthly demand less existing turnout capacity

APPENDIX 3.6-F: SYCAMORE IN-LIEU PROJECT ETc EFFECTIVE RAINFALL

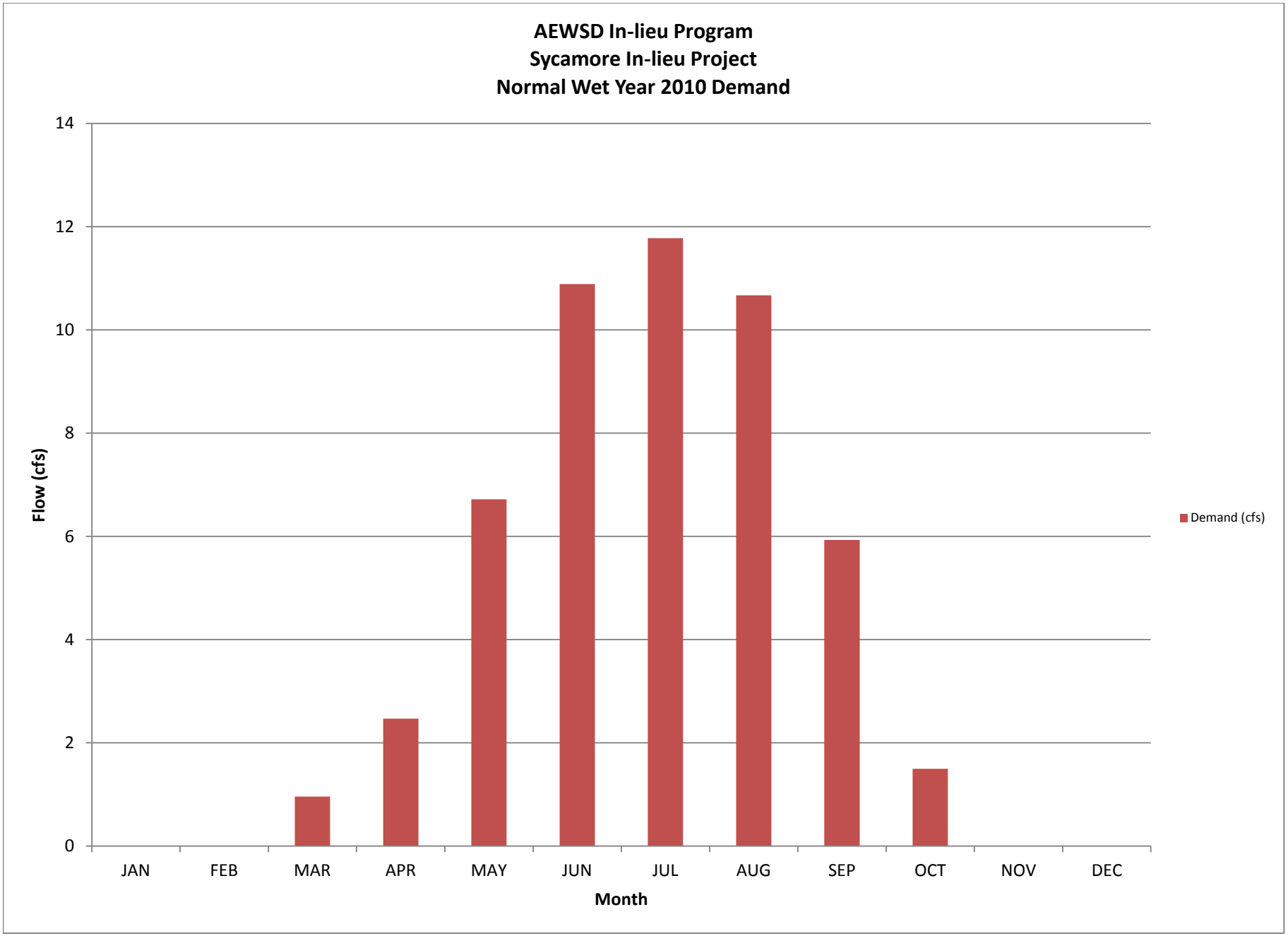

CROP ACREAGES:

Vineyard =	949	acres
Citrus =	0	acres
Deciduous - No Cover =	0	acres
Grain & Hay - Alfalfa =	0	acres
Truck and Field Crops - Potatoes =	0	acres
Pasture =	0	acres

TABLE 1. Input for Monthly ETo and Total Gross Rain

MONTH	ETo (in)	RAIN (in)	% EFF.	EFF. RAIN
JAN	1.21	0.59	2%	0.01
FEB	2.48	1.34	54%	0.72
MAR	3.56	1.10	0%	0.00
APR	4.61	1.93	28%	0.55
MAY	6.99	1.34	4%	0.05
JUN	8.70	0.00	0%	0.00
JUL	9.47	0.08	0%	0.00
AUG	8.86	0.00	0%	0.00
SEP	6.26	0.00	0%	0.00
OCT	3.70	0.28	42%	0.12
NOV	2.20	1.02	41%	0.42
DEC	1.21	5.63	84%	4.75
TOTALS	59.25	13.31		6.62

Effective rainfall is calculated using the work of Mac Gilverrey, CA Department of Water Resources. 1989.

Nov-Feb EFF = -0.54 + (0.94 * GROSS)
Mar-May EFF = -1.07 + (0.837 * GROSS)
Oct EFF = -0.06 + (0.635 * GROSS)

TABLE 2. ETc, With and Without Effective Rain (inches)

	NO RAIN (in)						WITH RAIN (in)					
MONTH	VINEYARD	CITRUS	DECIDUOUS	POTATOES	PASTURE	ALFALFA	VINEYARD	CITRUS	DECIDUOUS	POTATOES	PASTURE	ALFALFA
JAN	0.00	0.79	0.00	0.00	1.09	0.00	-0.01	0.77	-0.01	-0.01	1.07	-0.01
FEB	0.00	1.61	0.65	1.07	2.23	0.72	-0.72	0.89	-0.07	0.35	1.51	0.00
MAR	0.62	2.31	2.17	2.52	3.20	2.75	0.62	2.31	2.17	2.52	3.20	2.75
APR	2.11	3.00	3.34	5.26	4.15	3.43	1.57	2.45	2.79	4.72	3.60	2.89
MAY	4.48	4.54	5.87	7.12	6.29	5.59	4.43	4.49	5.82	7.07	6.24	5.54
JUN	6.95	5.66	7.83	1.93	7.83	8.42	6.95	5.66	7.83	1.93	7.83	8.42
JUL	7.77	6.16	8.52	0.00	8.52	9.65	7.77	6.16	8.52	0.00	8.52	9.65
AUG	7.04	5.76	7.97	0.00	7.97	8.57	7.04	5.76	7.97	0.00	7.97	8.57
SEP	3.78	4.07	5.20	0.00	5.63	0.00	3.78	4.07	5.20	0.00	5.63	0.00
OCT	1.09	2.41	2.40	0.00	3.33	0.00	0.97	2.29	2.28	-0.12	3.21	-0.12
NOV	0.00	1.43	0.39	0.00	1.98	0.00	-0.42	1.01	-0.03	-0.42	1.56	-0.42
DEC	0.00	0.79	0.00	0.00	1.09	0.00	-4.75	-3.97	-4.75	-4.75	-3.66	-4.75
ANNUAL	33.84	38.51	44.34	17.90	53.33	39.13	27.22	31.89	37.72	11.28	46.71	32.51

Negative values in the W/RAIN column indicate rain potentially going into soil storage.

TABLE 3A. Demand (AF)

	DEMAND						MONTHLY	MONTHLY
MONTH	VINEYARD	CITRUS	DECIDUOUS	POTATOES	PASTURE	ALFALFA	DEMAND	DEMAND [1/]
JAN	0	0	0	0	0	0	0	0
FEB	0	0	0	0	0	0	0	0
MAR	59	0	0	0	0	0	59	0
APR	147	0	0	0	0	0	147	0
MAY	413	0	0	0	0	0	413	0
JUN	648	0	0	0	0	0	648	148
JUL	724	0	0	0	0	0	724	208
AUG	656	0	0	0	0	0	656	140
SEP	353	0	0	0	0	0	353	0
OCT	92	0	0	0	0	0	92	0
NOV	0	0	0	0	0	0	0	0
DEC	0	0	0	0	0	0	0	0
ANNUAL	3,092	0	0	0	0	0	3,092	495

TABLE 3B. DEMAND (CFS)

	DEMAND						MONTHLY	MONTHLY
MONTH	VINEYARD	CITRUS	DECIDUOUS	POTATOES	PASTURE	ALFALFA	DEMAND	DEMAND [1/]
JAN	0.00	0.00	0.00	0.00	0.00	0.00	0.00	0.00
FEB	0.00	0.00	0.00	0.00	0.00	0.00	0.00	0.00
MAR	0.96	0.00	0.00	0.00	0.00	0.00	0.96	0.00
APR	2.47	0.00	0.00	0.00	0.00	0.00	2.47	0.00
MAY	6.72	0.00	0.00	0.00	0.00	0.00	6.72	0.00
JUN	10.89	0.00	0.00	0.00	0.00	0.00	10.89	2.49
JUL	11.77	0.00	0.00	0.00	0.00	0.00	11.77	3.37
AUG	10.67	0.00	0.00	0.00	0.00	0.00	10.67	2.27
SEP	5.93	0.00	0.00	0.00	0.00	0.00	5.93	0.00
OCT	1.50	0.00	0.00	0.00	0.00	0.00	1.50	0.00
NOV	0.00	0.00	0.00	0.00	0.00	0.00	0.00	0.00
DEC	0.00	0.00	0.00	0.00	0.00	0.00	0.00	0.00

[1/] Monthly demand less existing turnout capacity

APPENDIX 3.6-F: SYCAMORE IN-LIEU PROJECT ETc EFFECTIVE RAINFALL

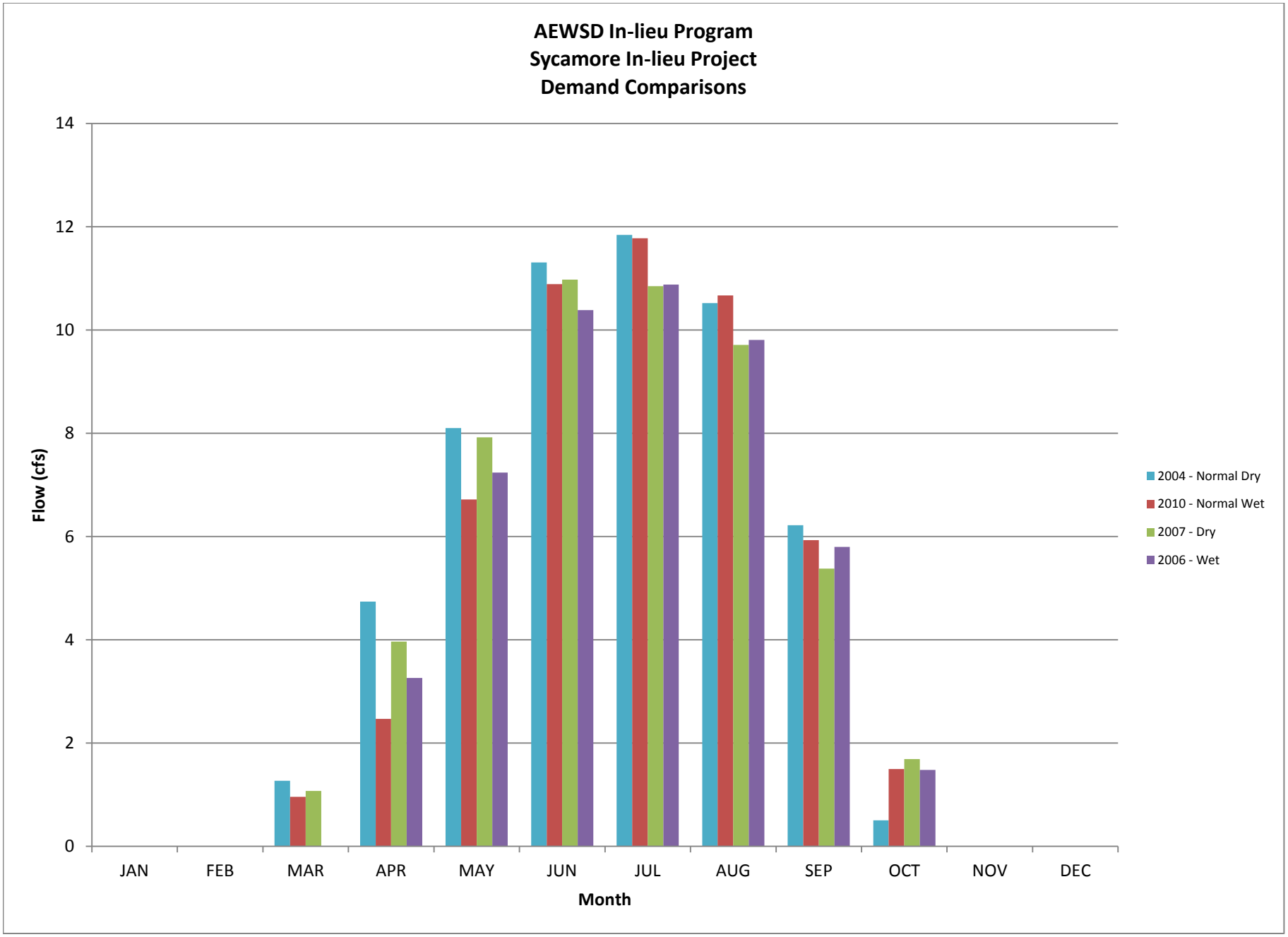

Appendix 3.6-G

Actual Energy Rate KWhAF by WY

APPENDIX 3.6-G: ACTUAL ENERGY RATE KWh/AF BY WY

	Actual Energy Rate (KWH/AF) by WY										
Facility	**2002**	**2003**	**2004**	**2005**	**2006**	**2007**	**2008**	**2009**	**2010**	**2011**	**10-Yr Aver.**
FFPP	259	241	243	221	228	246	255	240	229	229	**239**
North 5 Wells	719	666	639	n/a	n/a	619	652	673	n/a	n/a	**661**
North Canal Wellfield	522	760	723	n/a	n/a	710	736	752	n/a	n/a	**701**
Sycamore Wellfield	725	751	735	n/a	n/a	705	777	860	n/a	n/a	**759**
Tejon Wellfield	940	840	950	n/a	n/a	915	994	990	n/a	n/a	**938**
Distribution System	219	207	207	204	208	205	212	217	218	214	**211**
Distribution System-KWH	54,812,013	45,178,228	47,719,772	45,844,727	45,435,141	50,163,635	51,968,443	48,898,268	45,227,985	47,171,394	**48,241,961**

Appendix 3.6-H

In-Lieu Program 20% Design Sheet Set

ARVIN-EDISON WATER STORAGE DISTRICT

KERN COUNTY, CA

IN-LIEU PROGRAM

GENERAL NOTES

1. ARVIN–EDISON WATER STORAGE DISTRICT (AEWSD) 661–854–5573 SHALL BE CONTACTED AT LEAST 48 HOURS PRIOR TO COMMENCEMENT OF WORK ON OR NEAR EXISTING DISTRICT FACILITIES.
2. THE CONTRACTOR SHALL PROTECT THE EXISTING FACILITIES THAT ARE IN PLACE, AS IT WILL BE IN SERVICE, FROM DAMAGE RESULTING FROM THE CONSTRUCTION ACTIVITIES OF THIS PROJECT EXCEPT AS ALLOWED FOR THE INSTALLATION AND CONSTRUCTION OF PROPOSED PUMPS AND APPURTANANCES. CONTRACTOR SHALL COORDINATE WITH AEWSD TO DETERMINE THE DATES ON WHICH CONSTRUCTION ACTIVITIES WILL OCCUR.
3. AEWSD SHALL INSPECT ALL WORK PHASES ON IRRIGATION FACILITIES FOR CONFORMANCE TO SPECIFICATIONS.
4. ALL CONSTRUCTION SHALL BE IN CONFORMANCE WITH THESE PLANS AND SPECIFICATIONS.
5. USED MATERIAL, REJECTS, MISFITS, OR SECONDS, ETC. ARE NOT ACCEPTABLE FOR USE ON DISTRICT FACILITIES.
6. CONTRACTOR SHALL FIELD VERIFY THE HORIZONTAL AND VERTICAL LOCATIONS OF ALL EXISTING FACILITIES PRIOR TO COMMENCING WORK. CALL UNDERGROUND SERVICE ALERT (USA) AT 811. CONTRACTOR SHALL MAKE ENGINEER AWARE OF ANY DISCREPANCIES.
7. ALL CONSTRUCTION SHALL BE PERFORMED IN ACCORDANCE WITH APPLICABLE HEALTH AND SAFETY LAWS OF THE STATE OF CALIFORNIA AND CAL/OSHA STANDARDS.
8. CONTRACTOR WILL BE RESPONSIBLE FOR THE REPAIR OF ALL CRACKS OR OTHER DAMAGE TO DISTRICT FACILITIES WHICH DEVELOP DURING CONSTRUCTION OF IMPROVEMENTS AFFECTING EXISTING FACILITIES.
9. CONTRACTOR SHALL BE RESPONSIBLE FOR REMOVING AND DISPOSING OF ALL EXCESS MATERIAL AND/OR DEBRIS, INCLUDING CONCRETE RUBBLE, AND EXCESS SPOILS AND OTHER MATERIAL GENERATED ONSITE DURING CONSTRUCTION.
10. CONTRACTOR SHALL PERFORM HIS OWN MATERIAL QUANTITY TAKE–OFFS.
11. ALL CONSTRUCTION SHALL BE PERFORMED IN ACCORDANCE WITH APPLICABLE HEALTH AND SAFETY LAWS OF THE STATE OF CALIFORNIA AND CAL/OSHA STANDARDS.

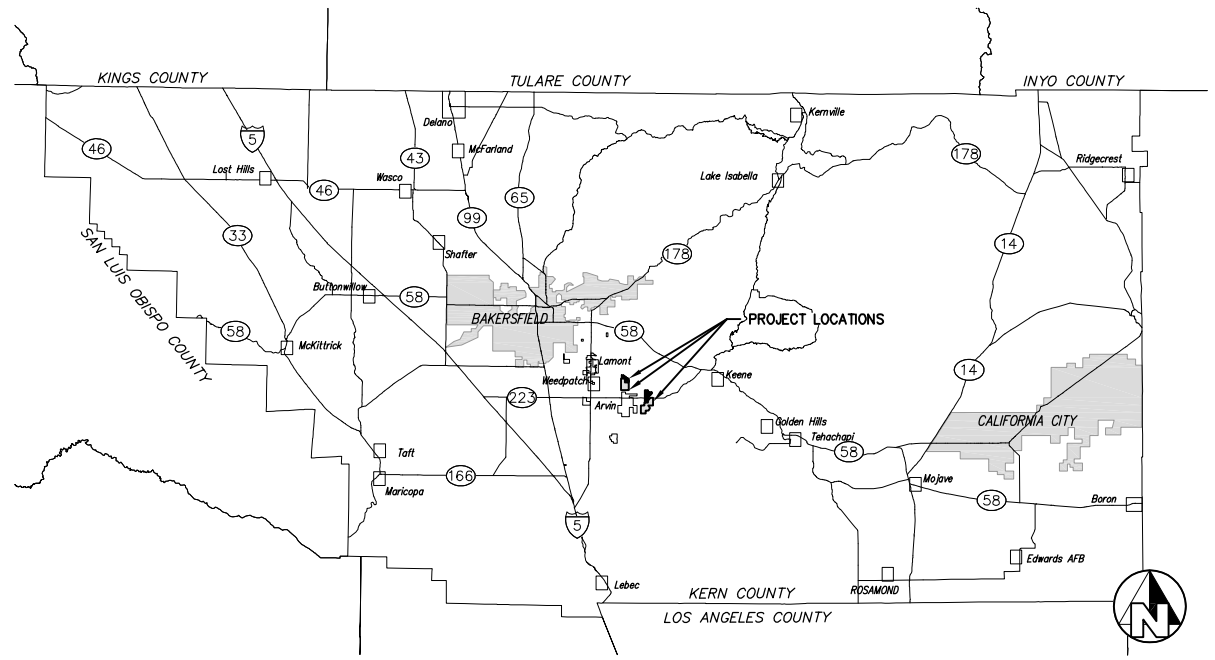

KERN COUNTY MAP
N.T.S.

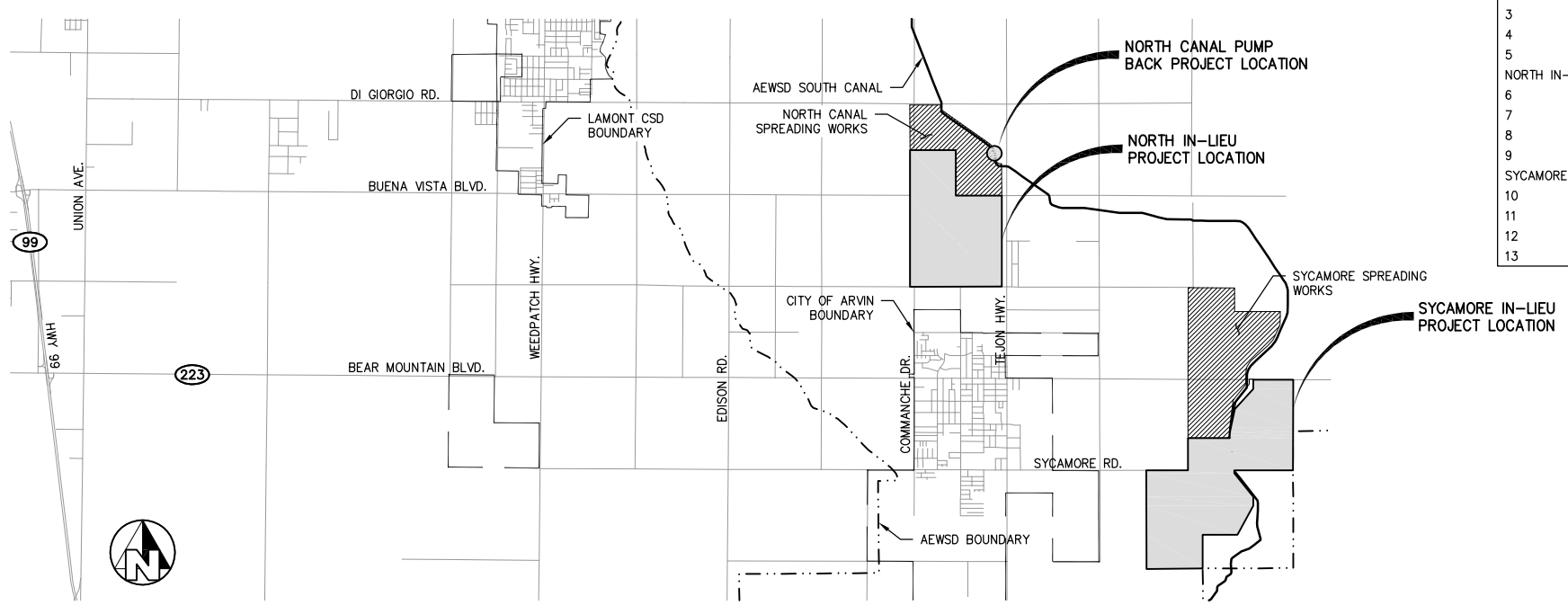

IN–LIEU PROGRAM SITE MAP
N.T.S.

SPECIAL NOTE

WHERE UNDERGROUND AND SURFACE STRUCTURES ARE SHOWN ON THE PLANS, THE LOCATIONS, DEPTH AND DIMENSIONS OF STRUCTURES ARE BELIEVED TO BE REASONABLY CORRECT, BUT ARE NOT GUARANTEED. SUCH STRUCTURES ARE SHOWN FOR THE INFORMATION OF THE CONTRACTOR, BUT INFORMATION SO GIVEN IS NOT TO BE CONSTRUED AS A REPRESENTATION THAT SUCH STRUCTURES WILL, IN ALL CASES, BE FOUND WHERE SHOWN, OR THAT THEY REPRESENT ALL OF THE STRUCTURES WHICH MAY BE ENCOUNTERED.

SITE SAFETY AND PROTECTION NOTES

THE DUTY OF THE ENGINEER, OWNER OR ITS AGENTS TO CONDUCT CONSTRUCTION REVIEW OF THE CONTRACTOR'S PERFORMANCE AND THE UNDERTAKING OF INSPECTIONS OR THE GIVING OF INSTRUCTIONS AS AUTHORIZED HEREIN IS NOT INTENDED TO INCLUDE REVIEW OF THE ADEQUACY OF THE CONTRACTOR'S SAFETY MEASURES IN, ON, OR NEAR THE CONSTRUCTION SITE AND SHALL NOT BE CONSTRUED AS SUPERVISION OF THE ACTUAL CONSTRUCTION NOR MAKE THE ENGINEER, OWNER OR ITS AGENTS RESPONSIBLE FOR PROVIDING A SAFE PLACE FOR THE PERFORMANCE OF WORK BY THE CONTRACTOR, SUBCONTRACTORS, OR SUPPLIERS, OR FOR ACCESS, VISITS, USE, WORK, TRAVEL OR OCCUPANCY BY ANY PERSON.

THE CONTRACTOR SHALL HAVE AT THE WORK SITE, COPIES OR SUITABLE EXTRACTS OF CONSTRUCTION SAFETY ORDERS, ISSUED BY CAL–OSHA. CONTRACTOR SHALL COMPLY WITH PROVISIONS OF THESE AND ALL OTHER APPLICABLE LAWS, ORDINANCES AND REGULATIONS. THE CONTRACTOR MUST COMPLY WITH PROVISIONS OF THE SAFETY AND HEALTH REGULATIONS FOR CONSTRUCTION, PROMULGATED BY THE SECRETARY OF LABOR UNDER SECTION 107 OF THE CONTRACT WORK HOURS AND SAFETY STANDARDS ACT, AS SET FORTH IN TITLE 29 C.F.R.

TO PROTECT THE LIVES AND HEALTH OF CONTRACTOR'S EMPLOYEES UNDER THE CONTRACT, THE CONTRACTOR SHALL COMPLY WITH ALL PERTINENT PROVISIONS OF THE "MANUAL OF ACCIDENT PREVENTION IN CONSTRUCTION" ISSUED BY THE ASSOCIATED GENERAL CONTRACTORS OF AMERICA, INC., AND SHALL MAINTAIN AN ACCURATE RECORD OF ALL CASES OF DEATH, OCCUPATIONAL DISEASE, AND INJURY REQUIRING MEDICAL ATTENTION OR CAUSING LOSS OF TIME FROM WORK, ARISING OUT OF AND IN THE COURSE OF EMPLOYMENT OR WORK UNDER THE CONTRACT.

THE CONTRACTOR ALONE SHALL BE RESPONSIBLE FOR THE SAFETY, EFFICIENCY, AND ADEQUACY OF CONTRACTOR'S FACILITIES, APPLIANCES, AND METHODS AND FOR ANY DAMAGE, WHICH MAY RESULT FROM THEIR FAILURE OR THEIR IMPROPER CONSTRUCTION, MAINTENANCE OR OPERATION.

THE CONTRACTOR AGREES THAT IT SHALL ASSUME SOLE AND COMPLETE RESPONSIBILITY FOR JOB SITE CONDITIONS DURING THE COURSE OF CONSTRUCTION OF THIS PROJECT, INCLUDING SAFETY OF ALL PERSONS AND PROPERTY; THAT THIS REQUIREMENT SHALL APPLY CONTINUOUSLY AND NOT BE LIMITED TO NORMAL WORKING HOURS; AND THAT THE CONTRACTOR SHALL DEFEND, INDEMNIFY AND HOLD THE OWNER, PROVOST & PRITCHARD CONSULTING GROUP, AND THEIR RESPECTIVE AGENTS HARMLESS FROM ANY AND ALL LIABILITY, REAL OR ALLEGED, IN CONNECTION WITH THE PERFORMANCE OF WORK ON THIS PROJECT, EXCEPTING FOR LIABILITY ARISING FROM THE SOLE NEGLIGENCE OF OWNER, ENGINEER, OR THEIR RESPECTIVE AGENTS.

THE OWNER AND ITS AGENTS' SITE RESPONSIBILITIES ARE LIMITED SOLELY TO THE ACTIVITIES OF THEIR EMPLOYEES ON SITE. THESE RESPONSIBILITIES SHALL NOT BE INFERRED BY ANY PARTY TO MEAN THAT THE OWNER OR ITS AGENTS HAVE RESPONSIBILITY FOR SITE SAFETY. SAFETY IN, ON, OR ABOUT THE SITE IS THE SOLE AND EXCLUSIVE RESPONSIBILITY OF THE CONTRACTOR ALONE. THE CONTRACTOR'S METHODS OF WORK PERFORMANCE, SUPERINTENDENCE AND THE CONTRACTOR'S EMPLOYEES, AND SEQUENCING OF CONSTRUCTION ARE ALSO THE SOLE AND EXCLUSIVE RESPONSIBILITIES OF THE CONTRACTOR ALONE.

WARNING
POWER LINES OVERHEAD

811 Know what's below. Call before you dig.

COPYRIGHT 2014 by PROVOST & PRITCHARD
RESERVED AND PROTECTED
The firm of Provost & Pritchard Engineering Group, Inc. expressly reserves its common law copyright and other property rights in these plans. These plans are not to be reproduced, changed, or copied in any form or manner whatsoever, nor are they to be assigned to any third party without first obtaining the written permission and consent of Provost & Pritchard Engineering Group, Inc. In the event of unauthorized reuse of these plans by a third party, the third party shall hold the firm of Provost & Pritchard Engineering Group, Inc. harmless, and shall defend and indemnify Provost & Pritchard Engineering Group, Inc.'s legal fees associated with defending and enforcing these rights.

No.	REVISION	BY	DATE

PRELIMINARY
NOT FOR CONSTRUCTION
07/20/2014

REGISTERED PROFESSIONAL ENGINEER
RANDY S. HOPKINS
No. CE 63538
EXP. 12/31/15
STATE OF CALIFORNIA
PRELIMINARY ONLY

DATE SIGNED: _____

IN–LIEU PROGRAM
ARVIN–EDISON WATER STORAGE DISTRICT
KERN COUNTY, CA

COVER SHEET

SHEET INDEX

SHEET NO.	DESCRIPTION
20% CONSTRUCTION PLANS	
1	COVER SHEET
NORTH CANAL PUMP BACK PROJECT	
2	PUMP PLAN
3	PUMP SECTIONS
4	PUMP SUPPORT & CATWALK DETAILS
5	PUMP DISCHARGE ASSEMBLY DETAILS
NORTH IN–LIEU PROJECT	
6	NORTH IN–LIEU SITE PLAN
7	TURNOUT STRUCTURE DETAILS
8	PIPELINE DETAILS
9	PIPELINE DETAILS
SYCAMORE IN–LIEU PROJECT	
10	SYCAMORE IN–LIEU SITE PLAN
11	TURNOUT SCA–1 MODIFICATION
12	PIPELINE DETAILS
13	PIPELINE DETAILS

APPROVALS

ARVIN–EDISON WATER STORAGE DISTRICT DATE

PROVOST & PRITCHARD
CONSULTING GROUP
EST. 1954
An Employee Owned Company
1800 30th STREET, SUITE 280
BAKERSFIELD, CALIFORNIA 93301
661/616–5900 FAX 661/616–5890
www.pperg.com

DESIGN ENGINEER: RANDY S. HOPKINS
LICENSE NO: CE 63,538
DRAFTED BY: JMG | CHECKED BY: MJD
DATE: 07/20/2014
JOB NO: 104814B1

0 1
ORIGINAL SCALE SHOWN IS IN INCHES. ADJUST SCALE FOR REDUCED OR ENLARGED PLANS.

SHEET 1 OF 13

7/20/2014 9:19 PM W:\Clients\Buena Vista WSD-1048\104814B1 DSG App\DWG\SHEET\AEWSD IN-LIEU BANKING PROJECT\ COVER SHEET.dwg -John Gudino

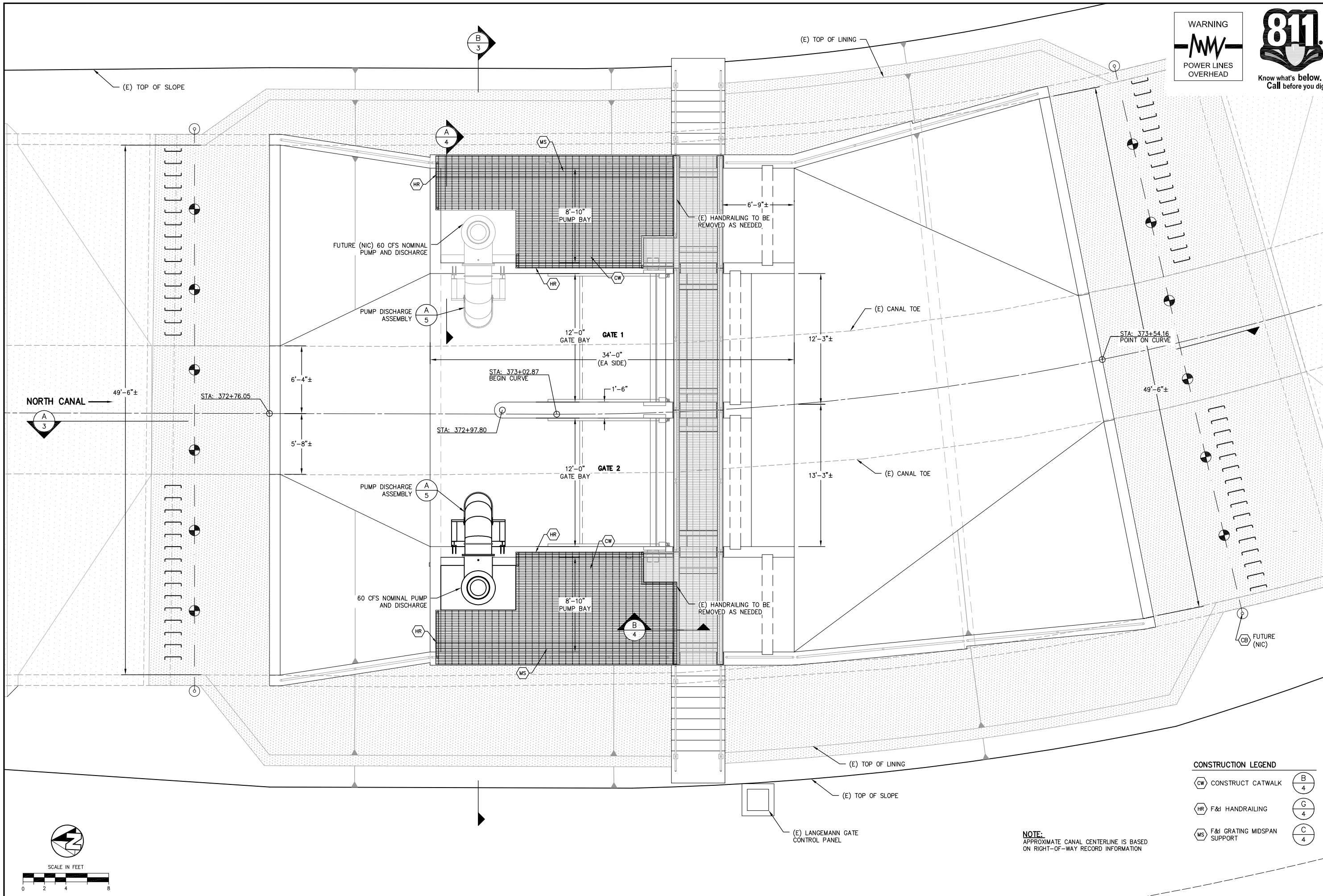

NOTE:
APPROXIMATE CANAL CENTERLINE IS BASED ON RIGHT-OF-WAY RECORD INFORMATION

CONSTRUCTION LEGEND

CW	CONSTRUCT CATWALK	B/4
HR	F&I HANDRAILING	G/4
MS	F&I GRATING MIDSPAN SUPPORT	C/4

COPYRIGHT 2014 by PROVOST & PRITCHARD
ALL RIGHTS RESERVED
The firm of Provost & Pritchard Engineering Group, Inc. expressly reserves its common law copyright and other property rights in these plans. These plans are not to be reproduced, changed, or copied in any form or manner whatsoever, nor are they to be assigned to any third party without first obtaining the written permission and consent of Provost & Pritchard Engineering Group, Inc. In the event of unauthorized reuse of these plans by a third party, the third party shall hold the firm of Provost & Pritchard Engineering Group, Inc. harmless, and shall further indemnify the firm of Provost & Pritchard Engineering Group, Inc. for any liability and legal fees associated with defending and enforcing these rights.

No.	REVISION	BY	DATE

PRELIMINARY
NOT FOR CONSTRUCTION
07/20/2014

REGISTERED PROFESSIONAL ENGINEER
RANDY S. HOPKINS
No. 63538
STATE OF CALIFORNIA

DATE SIGNED:

IN-LIEU PROGRAM
ARVIN-EDISON WATER STORAGE DISTRICT
KERN COUNTY, CA

NORTH CANAL PUMP BACK PROJECT
PUMP PLAN

PROVOST & PRITCHARD
EST. 1954
CONSULTING ENGINEERS
An Employee Owned Company
1800 30th STREET, SUITE 280
BAKERSFIELD, CALIFORNIA 93301
661/616-5900 FAX 661/616-5890
www.ppeng.com

DESIGN ENGINEER: RANDY S. HOPKINS	
LICENSE NO: CE 63,538	
DRAFTED BY: JMG	CHECKED BY: MJD
SCALE: AS SHOWN	
DATE: 07/20/2014	
JOB NO: 104814B1	
DWG. NO:	
SHEET 2 OF 13	

7/20/2014 9:19 PM W:\Clients\Buena Vista WSD-1048\104814B1 DSIG App\DWG\SHEET\AEWSD IN-LIEU BANKING PROJECT\2 CHECK STRUCTURE PLAN.dwg -John Gudino

FORWARD FLOW WATER LEVELS					
DESCRIPTION	LOCATION	CONDITION	GATE POSITION (ELEV)	FLOW RATE	WATER LEVEL
WATER LEVEL 1	UPSTREAM	NORMAL OPERATION	FULLY LOWERED (495.0)	1,000 CFS	506.70
WATER LEVEL 2	DOWNSTREAM	NORMAL OPERATION	FULLY LOWERED (495.0)	1,000 CFS	506.47
WATER LEVEL 3	UPSTREAM	OVERFLOW SPILL	FULLY RAISED (506.7)	100 CFS	507.20 (TOP OF LINING)
WATER LEVEL 4	UPSTREAM	OVERFLOW SPILL	FULLY RAISED (506.7)	250 CFS	507.64

NOTES:
CATWALK, HANDRAILING, AND LANGEMANN GATES NOT SHOWN FOR CLARITY

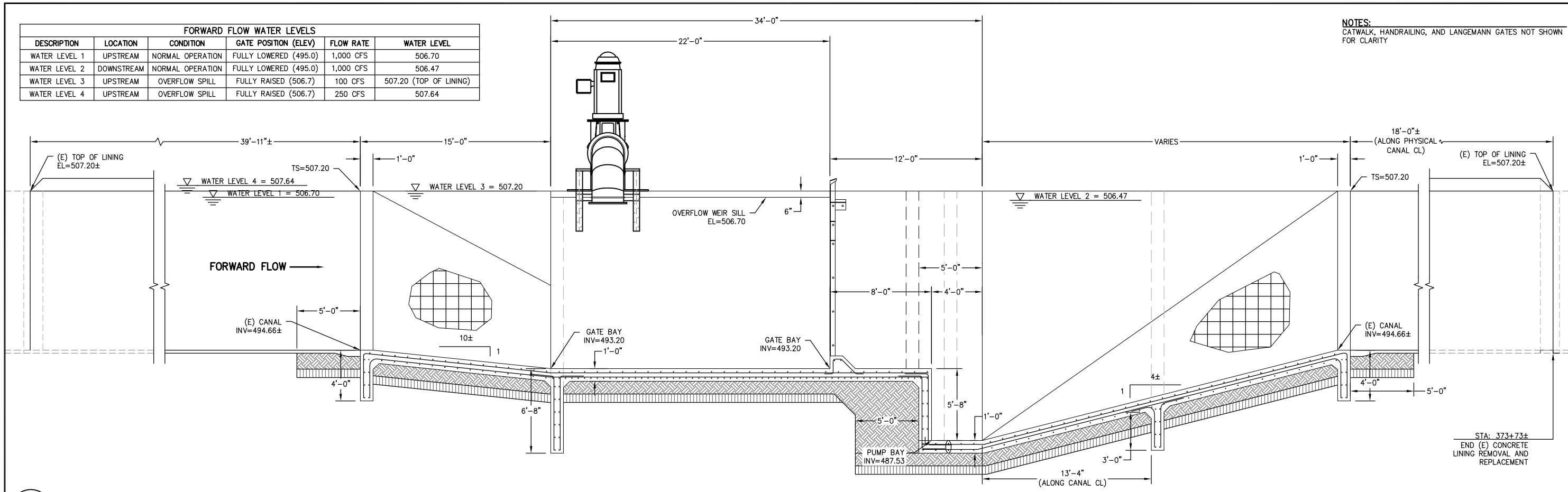

A
3

STRUCTURE SECTION A

NOTES:
CATWALK, HANDRAILING, AND LANGEMANN GATES NOT SHOWN FOR CLARITY

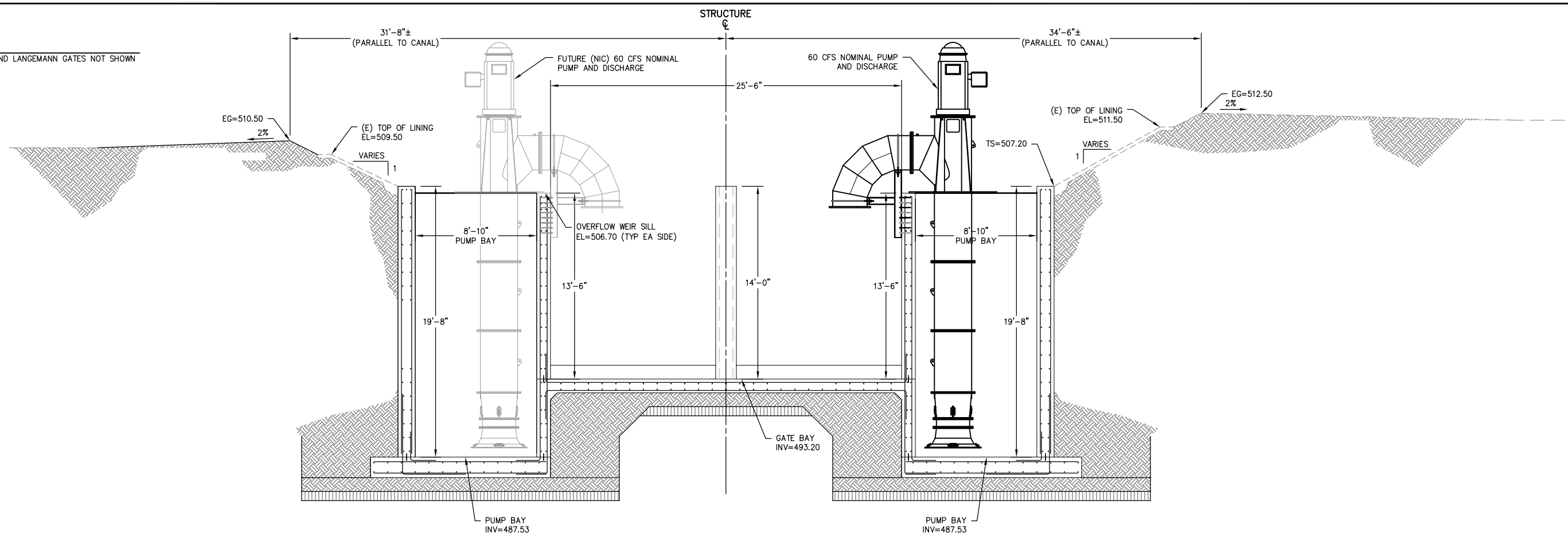

B
3

STRUCTURE SECTION B

COPYRIGHT 2014 by PROVOST & PRITCHARD
ALL RIGHTS RESERVED
The firm of Provost & Pritchard Engineering Group, Inc. expressly reserves its common law copyright and other property rights in these plans. These plans are not to be reproduced, changed, or copied in any form or manner whatsoever, nor are they to be assigned to any third party without first obtaining the written permission and consent of Provost & Pritchard Engineering Group, Inc. In the event of unauthorized reuse of these plans by a third party, the third party shall hold the firm of Provost & Pritchard Engineering Group, Inc. harmless, and shall further indemnify the firm of Provost & Pritchard Engineering Group, Inc.'s legal fees associated with defending and enforcing these rights.

PRELIMINARY
NOT FOR CONSTRUCTION
07/20/2014

No.	REVISION	BY	DATE

REGISTERED PROFESSIONAL ENGINEER
RANDY S. HOPKINS
No. CE 63538
STATE OF CALIFORNIA

DATE SIGNED:

IN-LIEU PROGRAM
ARVIN-EDISON WATER STORAGE DISTRICT
KERN COUNTY, CA

NORTH CANAL PUMP BACK PROJECT
PUMP SECTIONS

EST. 1945
PROVOST & PRITCHARD
CONSULTING GROUP
An Employee Owned Company
1800 30th STREET, SUITE 280
BAKERSFIELD, CALIFORNIA 93301
661/616-5900 FAX 661/616-5890
www.jpeng.com

DESIGN ENGINEER: RANDY S. HOPKINS
LICENSE NO: CE 63,538
DRAFTED BY: JMG | CHECKED BY: MJD
SCALE: AS SHOWN
DATE: 07/20/2014
JOB NO: 104814B1
DWG. NO:
SHEET 3 OF 13

7/20/2014 9:20 PM W:\Clients\Buena Vista WSD-1048\104814B1 DSIG App\DWG\SHEET\AEWSD IN-LIEU BANKING PROJECT\3 PUMP SECTIONS.dwg -John Gudino

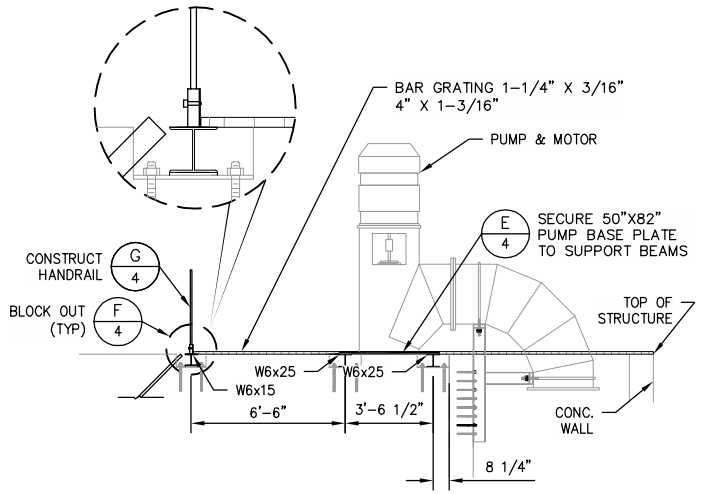

A/4 PUMP STATION SECTION A

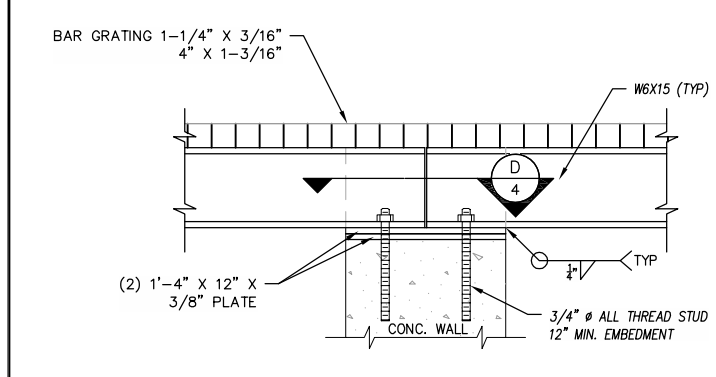

B/4 CATWALK DETAIL

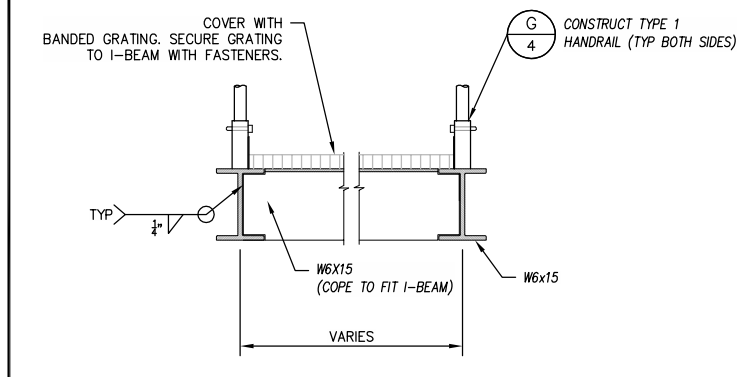

C/4 GRATING MIDSPAN SUPPORT

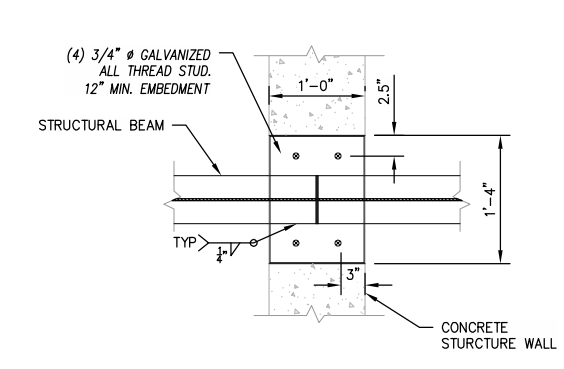

D/4 BEAM BUTT JOINT

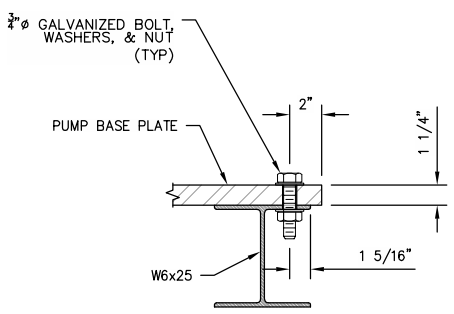

NOT TO SCALE

E/4 PUMP BASE PLATE ATTACHMENT

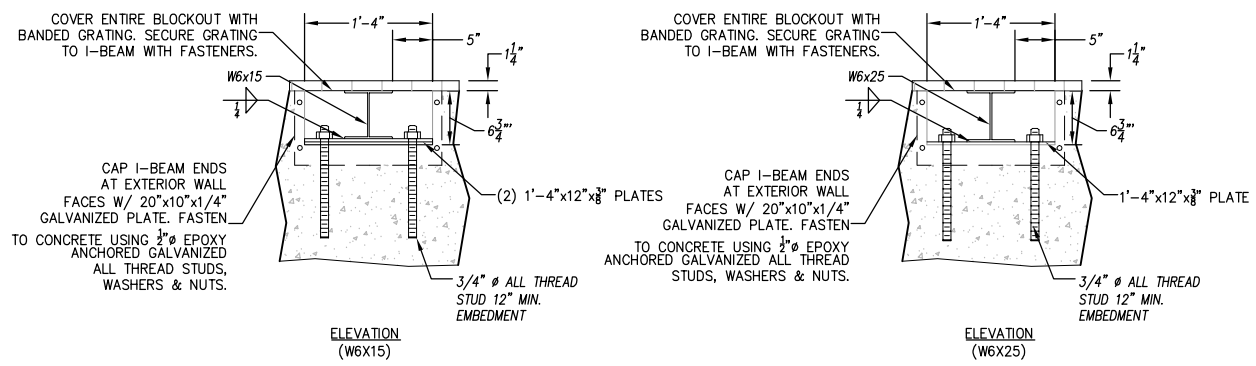

F/4 BLOCK OUT

NOTE: ALL HANDRAILING TO BE HOT-DIP GALVANIZED AFTER FABRICATION.

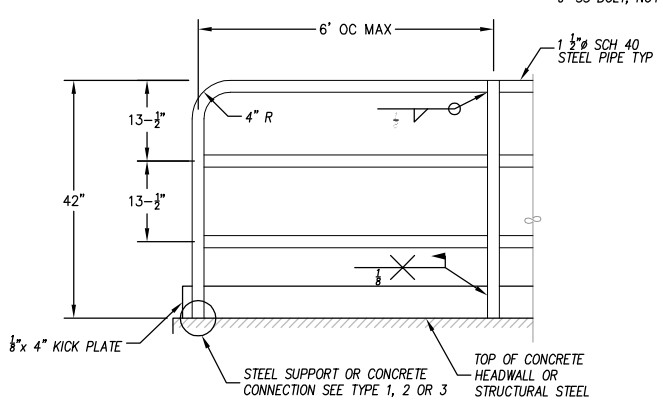

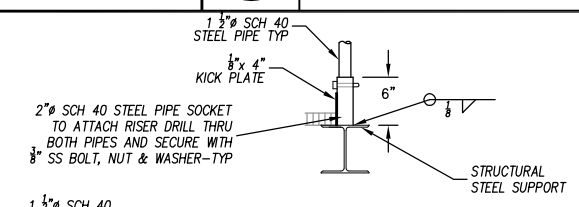

TYPE 1 – STEEL SUPPORT CONNECTION

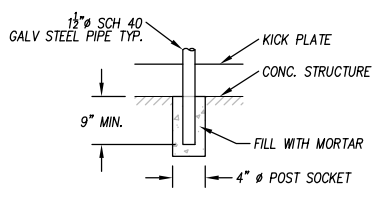

TYPE 2 – CONCRETE CONNECTION

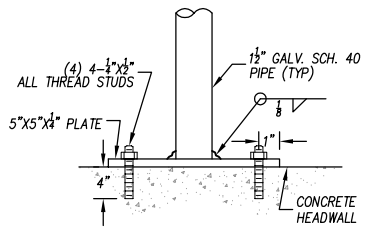

TYPE 3 – CONCRETE CONNECTION

SCALE: NTS

G/4 HANDRAIL DETAIL

COPYRIGHT 2014 by PROVOST & PRITCHARD ALL RIGHTS RESERVED. The firm of Provost & Pritchard Engineering Group, Inc. expressly reserves its common law copyright and other property rights in these plans. These plans are not to be reproduced, changed, or copied in any form or manner whatsoever, nor are they to be assigned to any third party without first obtaining the written permission and consent of Provost & Pritchard Engineering Group, Inc. In the event of unauthorized reuse of these plans by a third party, the third party shall hold the firm of Provost & Pritchard Engineering Group, Inc. harmless, and shall indemnify the firm of Provost & Pritchard Engineering Group, Inc.'s legal fees associated with defending and enforcing these rights.

PRELIMINARY
NOT FOR CONSTRUCTION
07/20/2014

No.	REVISION	BY	DATE

REGISTERED PROFESSIONAL ENGINEER — RANDY S. HOPKINS — No. CE 63,538 — STATE OF CALIFORNIA

DATE SIGNED:

IN-LIEU PROGRAM
ARVIN-EDISON WATER STORAGE DISTRICT
KERN COUNTY, CA

NORTH CANAL PUMP BACK PROJECT
PUMP SUPPORT & CATWALK DETAILS

PROVOST & PRITCHARD
CONSULTING GROUP
An Employee Owned Company
1800 30th STREET, SUITE 280
BAKERSFIELD, CALIFORNIA 93301
661/616-5900 FAX 661/616-5890
www.ppeng.com

DESIGN ENGINEER: RANDY S. HOPKINS
LICENSE NO: CE 63,538
DRAFTED BY: JMG
CHECKED BY: MJD
DATE: 07/20/2014
JOB NO: 104814B1

0 1
ORIGINAL SCALE SHOWN IS IN INCHES. ADJUST SCALE FOR REDUCED OR ENLARGED PLANS.

SHEET 4 OF 13

7/20/2014 9:21 PM W:\Clients\Buena Vista WSD-1048\104814B1 DSG App\DWG\SHEET\AEWSD IN-LIEU BANKING PROJECT\4 PUMP SUPPORT & CATWALK DETAILS.dwg -John Gudino

DISCHARGE DIMENSIONS	
DIMENSION	32"ø DISCHARGE
'A'	1'-7"
'B'	1'-6"
'C'	1'-6"
'D'	1'-6"
'E'	10 3/4"
'F'	3'-9"
'G'	1 3/4"
'H'	4'-7"

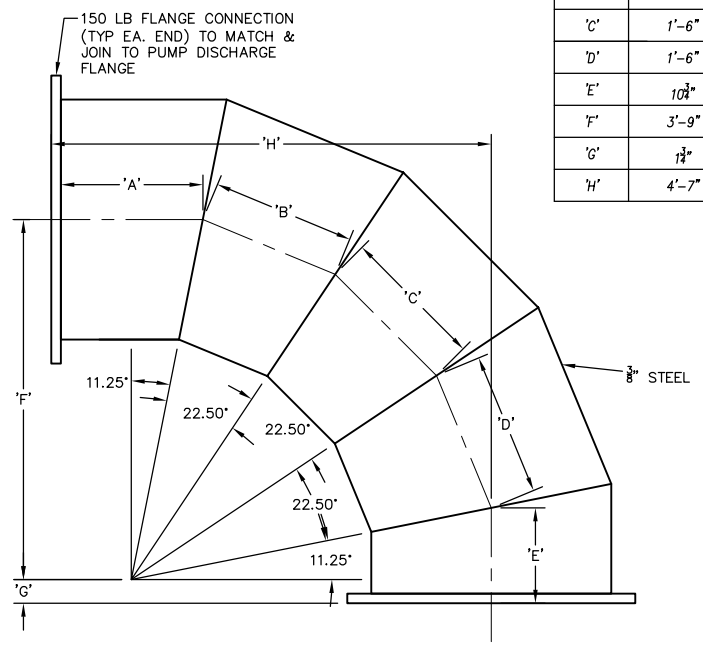

PUMP DISCHARGE DIMESIONS

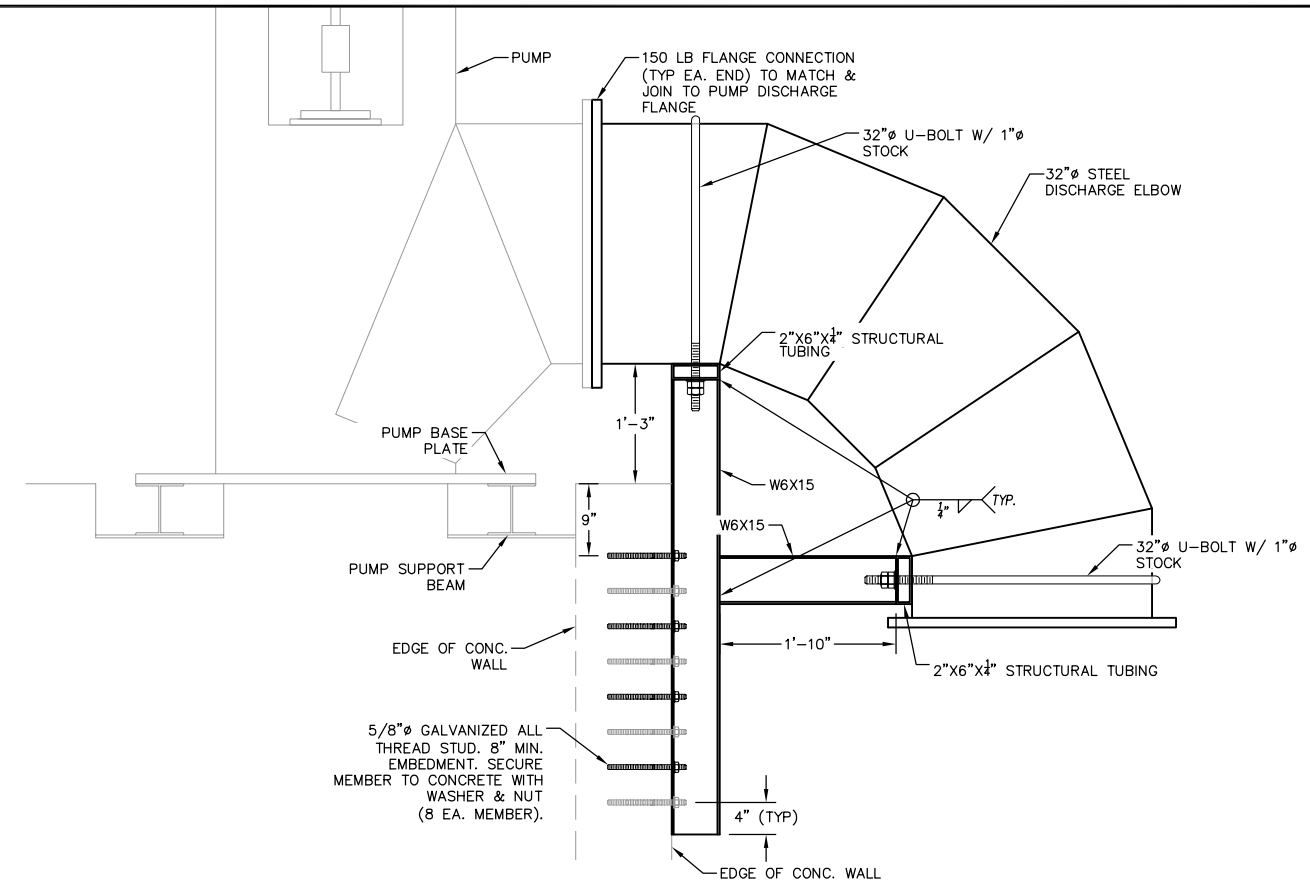

SIDE VIEW

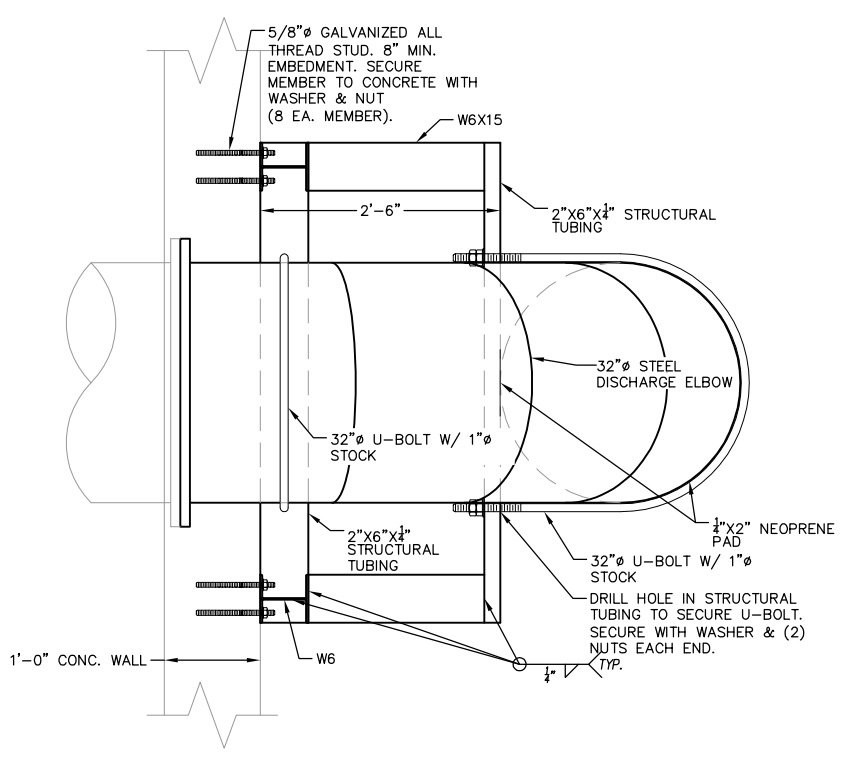

TOP VIEW

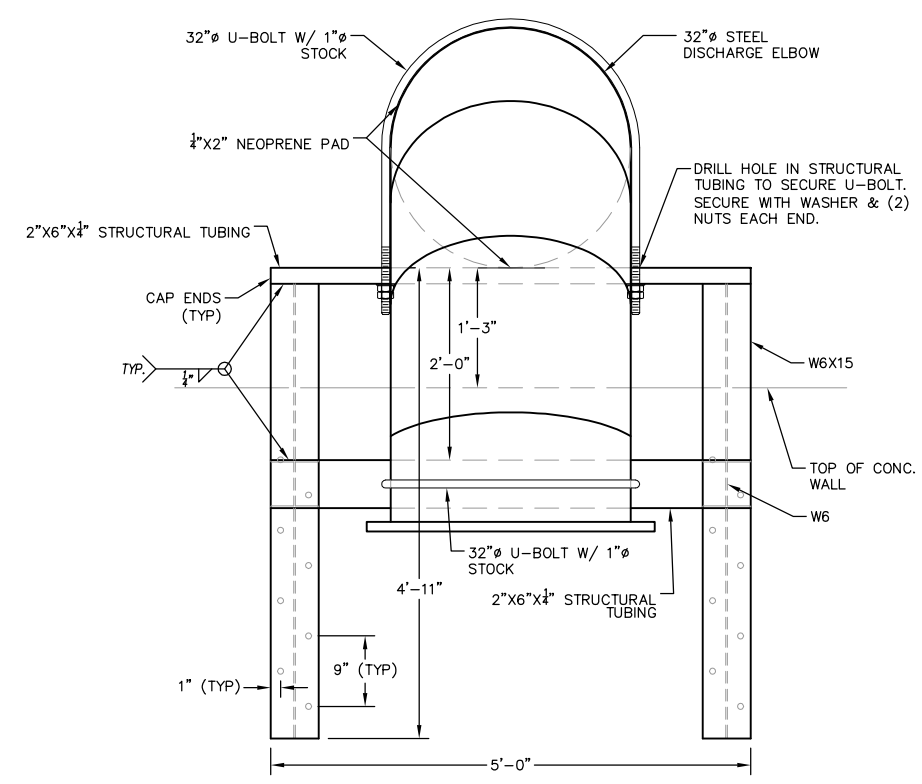

FRONT VIEW

COPYRIGHT 2014 by PROVOST & PRITCHARD
ALL RIGHTS RESERVED
The firm of Provost & Pritchard Engineering Group, Inc. expressly reserves its common law copyright and other property rights in these plans. These plans are not to be reproduced, changed, or copied in any form or manner whatsoever, nor are they to be assigned to any third party without first obtaining the written permission and consent of Provost & Pritchard Engineering Group, Inc. In the event of unauthorized reuse of these plans by a third party, the third party shall hold the firm of Provost & Pritchard Engineering Group, Inc. harmless, and shall further indemnify the firm of Provost & Pritchard Engineering Group, Inc.'s legal fees associated with defending and enforcing these rights.

No.	REVISION	BY	DATE

PRELIMINARY
NOT FOR CONSTRUCTION
07/20/2014

REGISTERED PROFESSIONAL ENGINEER
RANDY S. HOPKINS
No. CE 63538
STATE OF CALIFORNIA
SEALED FOR REVIEW ONLY

DATE SIGNED: _____

IN-LIEU PROGRAM
ARVIN-EDISON WATER STORAGE DISTRICT
KERN COUNTY, CA

NORTH CANAL PUMP BACK PROJECT
PUMP DISCHARGE ASSEMBLY DETAILS

PROVOST & PRITCHARD
EST. 1945
CONSULTING ENGINEERS
An Employee Owned Company
1800 30th STREET, SUITE 280
BAKERSFIELD, CALIFORNIA 93301
661/616-5900 FAX 661/616-5890
www.provpritch.com

DESIGN ENGINEER: RANDY S. HOPKINS
LICENSE NO: CE 63,538
DRAFTED BY: JMG | CHECKED BY: MJD
DATE: 07/20/2014
JOB NO: 104814B1
0 1
ORIGINAL SCALE SHOWN IS IN INCHES. ADJUST SCALE FOR REDUCED OR ENLARGED PLANS.
SHEET 5 OF 13

A
5

PUMP DISCHARGE ASSEMBLY

7/20/2014 9:22 PM W:\Clients\Buena Vista WSD-1048\104814B1 DSIG App\DWG\SHEET\AENSD IN-LIEU BANKING PROJECT\5 PUMP DISCHARGE ASSEMBLY DETAILS.dwg -John Gudino

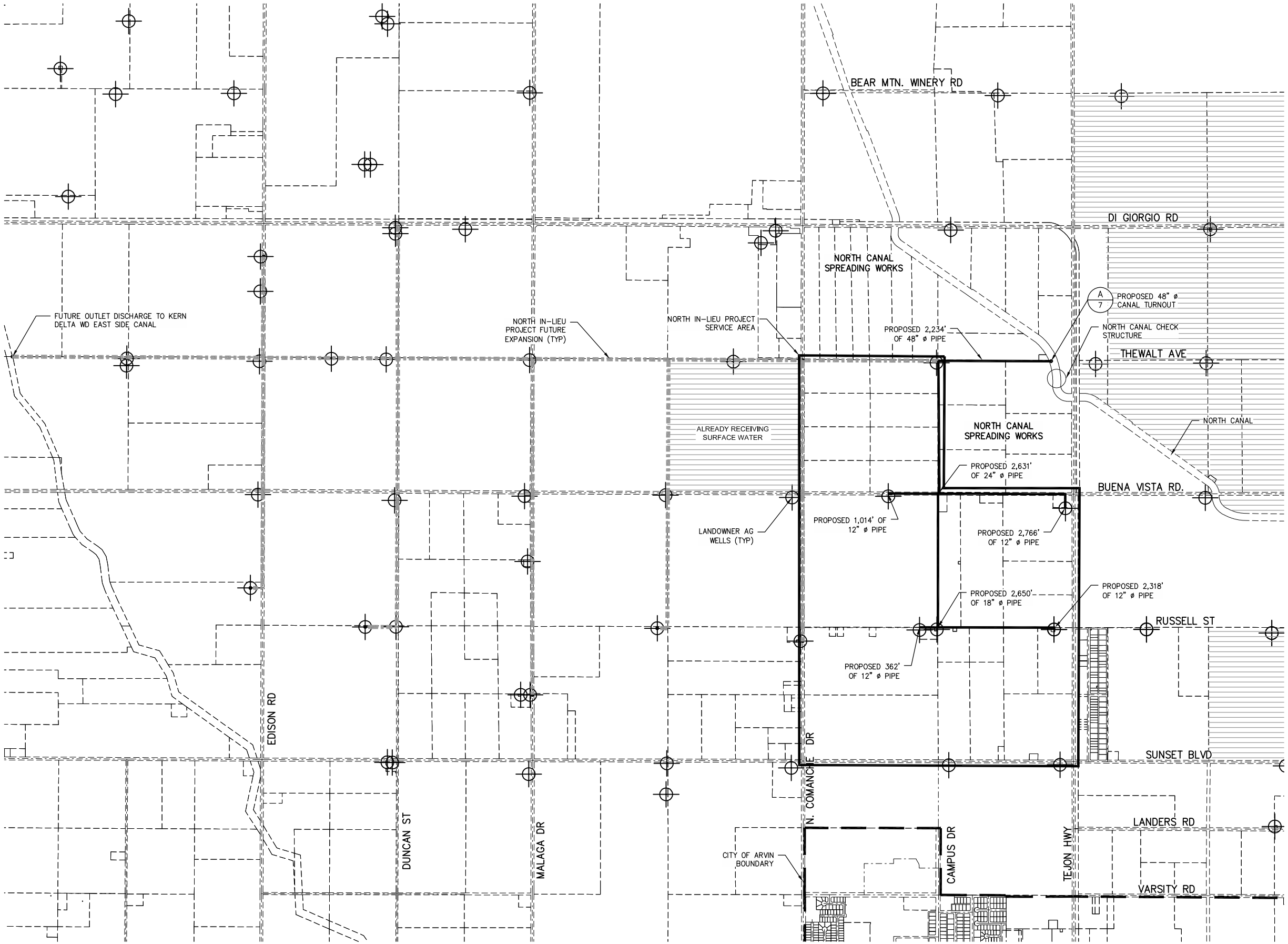

WARNING
POWER LINES OVERHEAD

811 Know what's below. Call before you dig.

COPYRIGHT 2014 by PROVOST & PRITCHARD
ALL RIGHTS RESERVED
The firm of Provost & Pritchard Engineering Group, Inc. expressly reserves its common law copyright and other property rights in these plans. These plans are not to be reproduced, changed, or copied in any form or manner whatsoever, nor are they to be assigned to any third party without first obtaining the written permission and consent of Provost & Pritchard Engineering Group, Inc. In the event of unauthorized reuse of these plans by a third party, the third party shall hold the firm of Provost & Pritchard Engineering Group, Inc. harmless, and shall further indemnify the firm of Provost & Pritchard Engineering Group, Inc.'s legal fees associated with defending and enforcing these rights.

No.	REVISION	BY	DATE

PRELIMINARY
NOT FOR CONSTRUCTION
07/20/2014

REGISTERED PROFESSIONAL ENGINEER — RANDY S. HOPKINS — CE 63,538 — STATE OF CALIFORNIA — PRELIMINARY ONLY

DATE SIGNED:

IN-LIEU PROGRAM
ARVIN-EDISON WATER STORAGE DISTRICT
KERN COUNTY, CA

NORTH IN-LIEU PROJECT
NORTH IN-LIEU SITE PLAN

PROVOST & PRITCHARD
CONSULTING GROUP
An Employee Owned Company
1800 30th STREET, SUITE 280
BAKERSFIELD, CALIFORNIA 93301
661/616-5900 FAX 661/616-5890
www.ppeng.com

DESIGN ENGINEER: RANDY S. HOPKINS
LICENSE NO: CE 63,538
DRAFTED BY: JMG
CHECKED BY: MJD
DATE: 07/20/2014
JOB NO: 104814B1
0 1
ORIGINAL SCALE SHOWN IS IN INCHES. ADJUST SCALE FOR REDUCED OR ENLARGED PLANS.
SHEET 6 OF 13

7/20/2014 9:25 PM W:\Clients\Buena Vista WSD-1048\104814B1 DSG App\DWG\SHEET\AEWSD IN-LIEU BANKING PROJECT\6 NORTH IN-LIEU SITE PLAN.dwg ~John Gudino

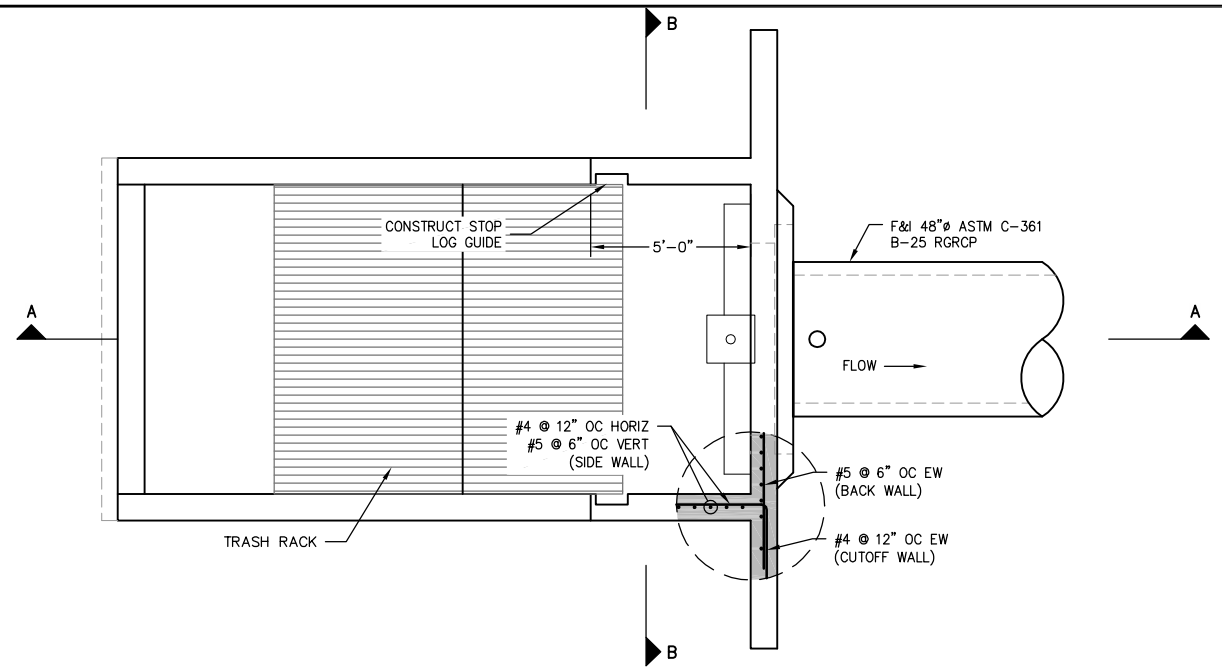

CONSTRUCTION LEGEND

- CH — 6" CHAMFER
- CJ — CONSTRUCTION JOINT
- OE — OVEREXCAVATE 12" BELOW STRUCTURE SUBGRADE & RECOMPACT TO MIN 95% RELATIVE DENSITY
- SR — SCARIFY 8" & RECOMPACT TO MIN 95% RELATIVE DENSITY

NOTE

SLUICE GATES AND OTHER METAL ITEMS NOT SHOWN FOR CLARITY

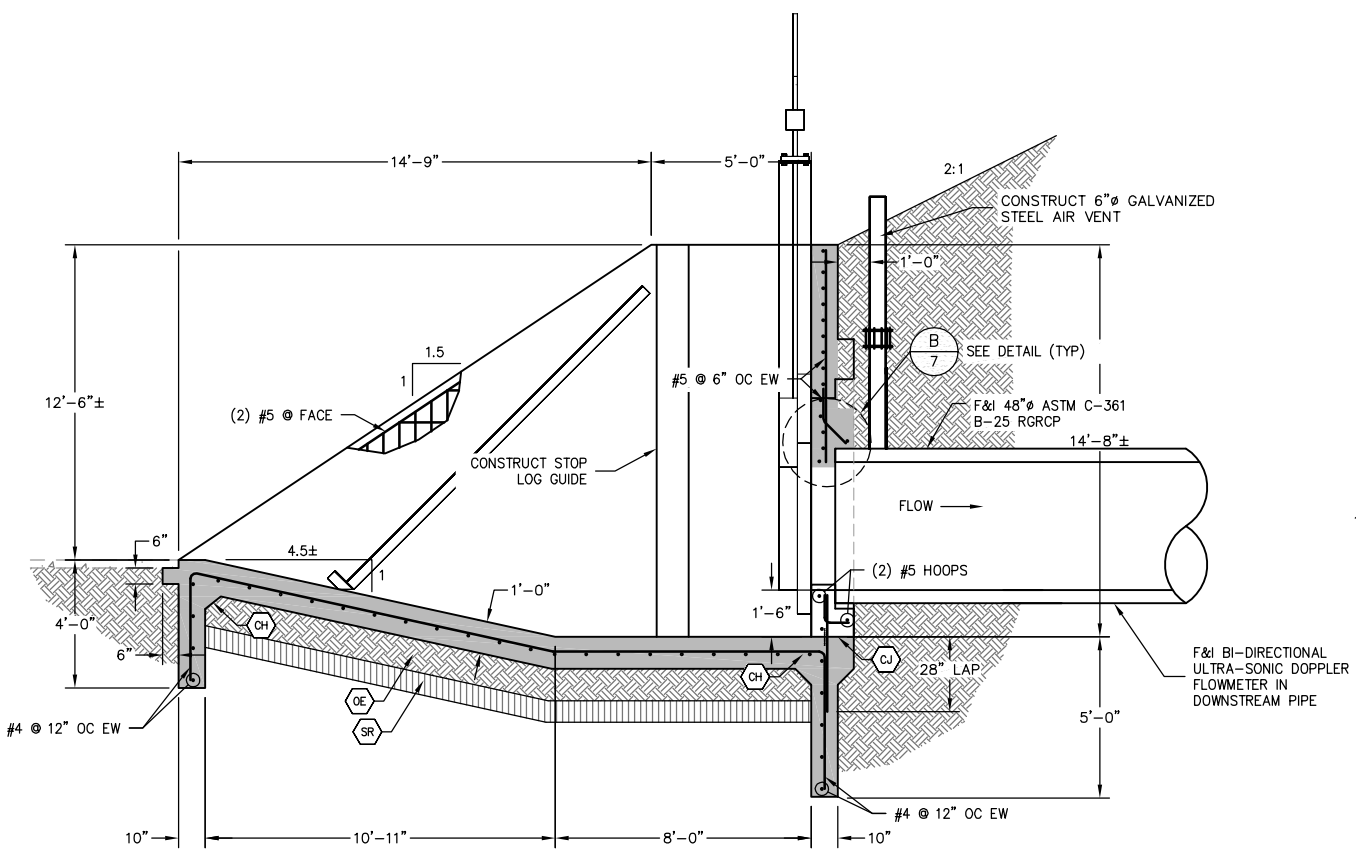

SECTION A–A

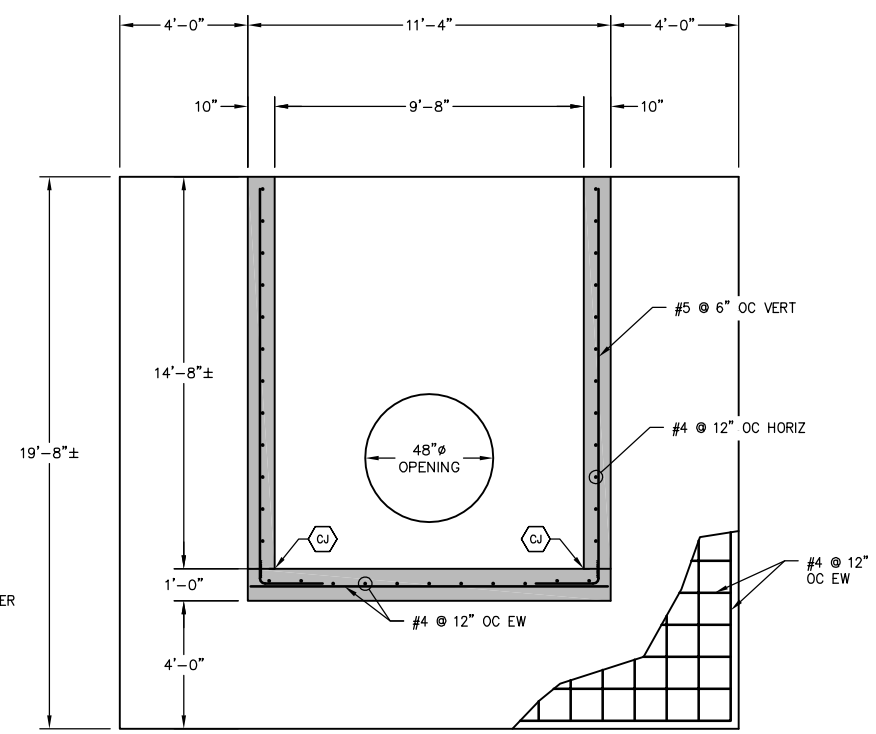

SECTION B–B

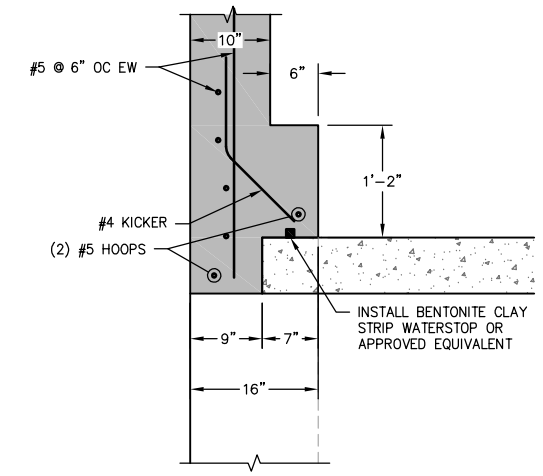

FEET 0 .5 1

B / 7

DETAIL

A / 7

SCALE: NTS

NORTH IN–LIEU TURNOUT STRUCTURE

COPYRIGHT 2014 by PROVOST & PRITCHARD
ALL RIGHTS RESERVED
The firm of Provost & Pritchard Engineering Group, Inc. expressly reserves its common law copyright and other property rights in these plans. These plans are not to be reproduced, changed, or copied in any form or manner whatsoever, nor are they to be assigned to any third party without first obtaining the written permission and consent of Provost & Pritchard Engineering Group, Inc. In the event of unauthorized reuse of these plans by a third party, the third party shall hold the firm of Provost & Pritchard Engineering Group, Inc. harmless, and shall further be liable to Provost & Pritchard Engineering Group, Inc.'s legal fees associated with defending and enforcing these rights.

PRELIMINARY
NOT FOR CONSTRUCTION
07/20/2014

No.	REVISION	BY	DATE

REGISTERED PROFESSIONAL ENGINEER — RANDY S. HOPKINS — No. 63538 — STATE OF CALIFORNIA — PRELIMINARY ONLY

DATE SIGNED: _____

IN–LIEU PROGRAM
ARVIN–EDISON WATER STORAGE DISTRICT
KERN COUNTY, CA

NORTH IN–LIEU PROJECT
TURNOUT STRUCTURE DETAILS

EST. 1963
PROVOST & PRITCHARD
CONSULTING GROUP
An Employee Owned Company
1800 30th STREET, SUITE 280
BAKERSFIELD, CALIFORNIA 93301
661/616-5900 FAX 661/616-5890
www.pandp.com

DESIGN ENGINEER: RANDY S. HOPKINS
LICENSE NO: CE 63,538
DRAFTED BY: JMG | CHECKED BY: MJD
DATE: 07/20/2014
JOB NO: 104814B1
0 1
ORIGINAL SCALE SHOWN IS IN INCHES. ADJUST SCALE FOR REDUCED OR ENLARGED PLANS.
SHEET 7 OF 13

7/20/2014 9:26 PM W:\Clients\Buena Vista WSD-1048\104814B1 DSG App\DWG\SHEET\AEWSD IN-LIEU BANKING PROJECT\7 TURNOUT STRUCTURE DETAILS.dwg -John Gudino

ALL AIR VENT ASSEMBLY PIPES AND FITTINGS SHALL BE PVC SCH 40 UNLESS OTHERWISE NOTED.

PIPE SIZE	TOTAL 2" BERMAD AIR & VACUUM RELIEF VALVE	A.	B.
10" PIPE	1	10"X8"X10"	2"
12" PIPE	1	12"X8"X12"	2"
15" PIPE	1	15"X8"X15"	2"
18" PIPE	2	18"X8"X18"	4"
21" PIPE	2	21"X8"X21"	4"
24" PIPE	2	24"X8"X24"	4"

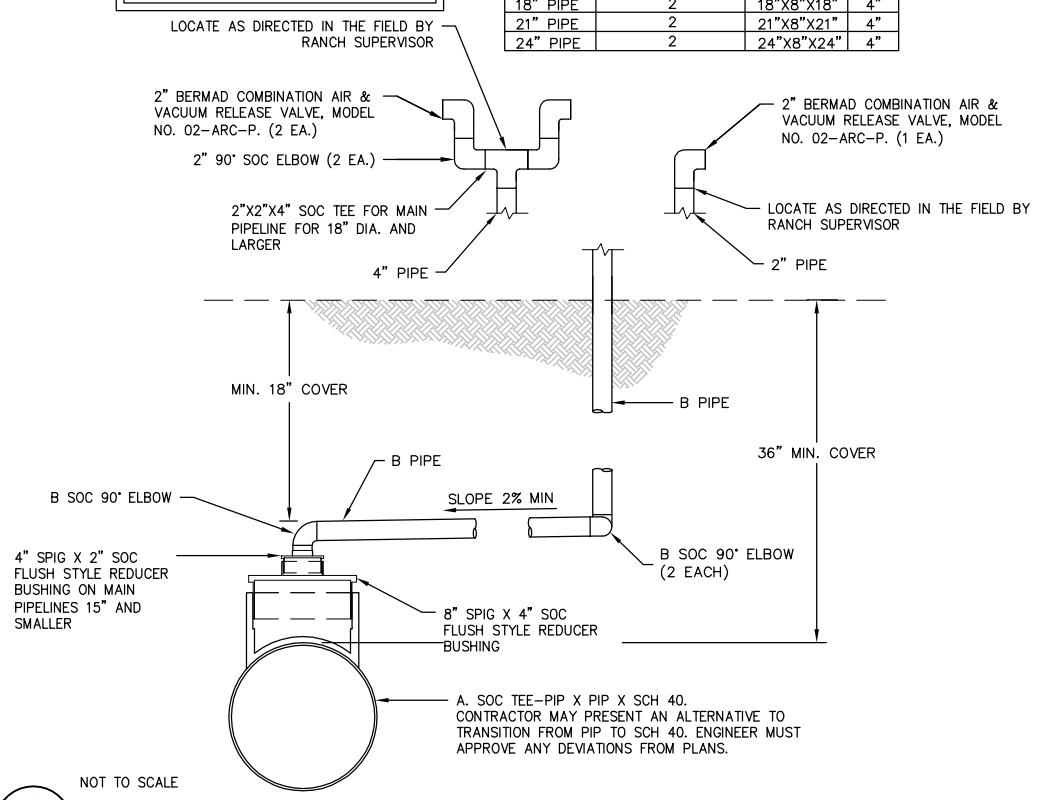

NOT TO SCALE

A / 8

AIR VENT ASSEMBLY

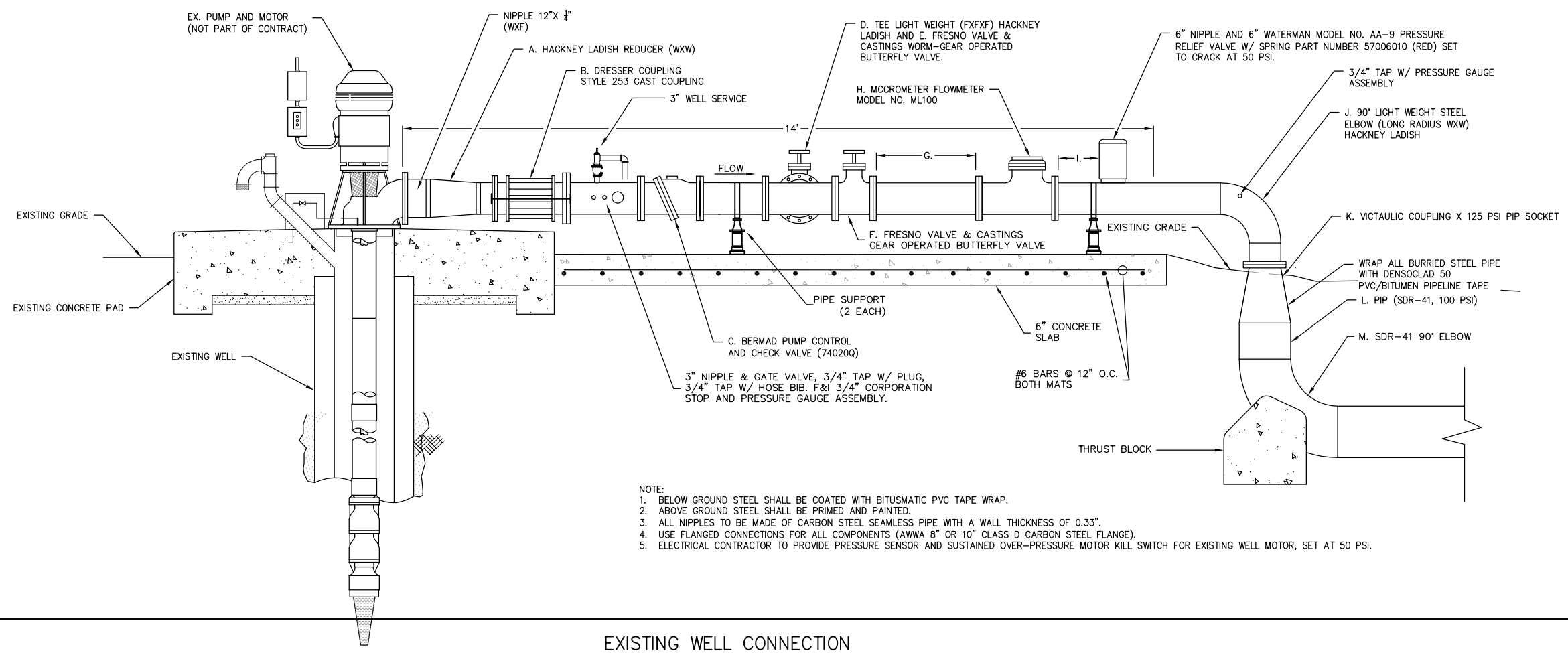

NOTE:
1. BELOW GROUND STEEL SHALL BE COATED WITH BITUSMATIC PVC TAPE WRAP.
2. ABOVE GROUND STEEL SHALL BE PRIMED AND PAINTED.
3. ALL NIPPLES TO BE MADE OF CARBON STEEL SEAMLESS PIPE WITH A WALL THICKNESS OF 0.33".
4. USE FLANGED CONNECTIONS FOR ALL COMPONENTS (AWWA 8" OR 10" CLASS D CARBON STEEL FLANGE).
5. ELECTRICAL CONTRACTOR TO PROVIDE PRESSURE SENSOR AND SUSTAINED OVER-PRESSURE MOTOR KILL SWITCH FOR EXISTING WELL MOTOR, SET AT 50 PSI.

NOT TO SCALE

B / 8

EXISTING WELL CONNECTION

COPYRIGHT 2014 by PROVOST & PRITCHARD
ALL RIGHTS RESERVED
The firm of Provost & Pritchard Engineering Group, Inc. expressly reserves its common law copyright and other property rights in these plans. These plans are not to be reproduced, changed, or copied in any form or manner whatsoever, nor are they to be assigned to any third party without first obtaining the written permission and consent of Provost & Pritchard Engineering Group, Inc. In the event of unauthorized reuse of these plans by a third party, the third party shall hold the firm of Provost & Pritchard Engineering Group, Inc. harmless, and shall defend the firm of Provost & Pritchard Engineering Group, Inc.'s legal fees associated with defending and enforcing these rights.

No.	REVISION	BY	DATE

PRELIMINARY
NOT FOR CONSTRUCTION
07/20/2014

REGISTERED PROFESSIONAL ENGINEER — RANDY S. HOPKINS — CIVIL — No. 63538 — STATE OF CALIFORNIA — NOT FOR CONSTRUCTION

DATE SIGNED: _____

IN-LIEU PROGRAM
ARVIN-EDISON WATER STORAGE DISTRICT
KERN COUNTY, CA

NORTH IN-LIEU PROJECT
PIPELINE DETAILS

EST. 1949
PROVOST & PRITCHARD
CONSULTING ENGINEERS
An Employee Owned Company
1800 30th STREET, SUITE 280
BAKERSFIELD, CALIFORNIA 93301
661/616-5900 FAX 661/616-5890
www.jpeng.com

DESIGN ENGINEER: RANDY S. HOPKINS
LICENSE NO: CE 63,538
DRAFTED BY: JMG | CHECKED BY: MJD
DATE: 07/20/2014
JOB NO: 104814B1
0 — 1
ORIGINAL SCALE SHOWN IS IN INCHES. ADJUST SCALE FOR REDUCED OR ENLARGED PLANS.
SHEET 8 OF 13

7/20/2014 9:26 PM W:\Clients\Buena Vista WSD-1048\104814B1 DSG App\DWG\SHEET\AEWSD IN-LIEU BANKING PROJECT\8 PIPELINE DETAILS.dwg -John Gudino

PI-0402

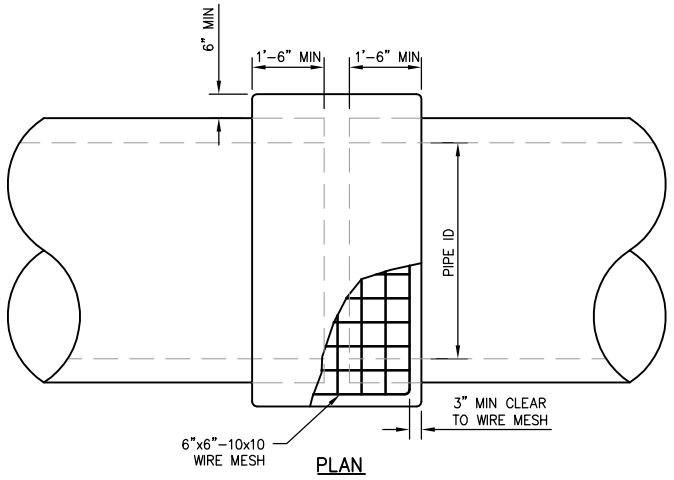

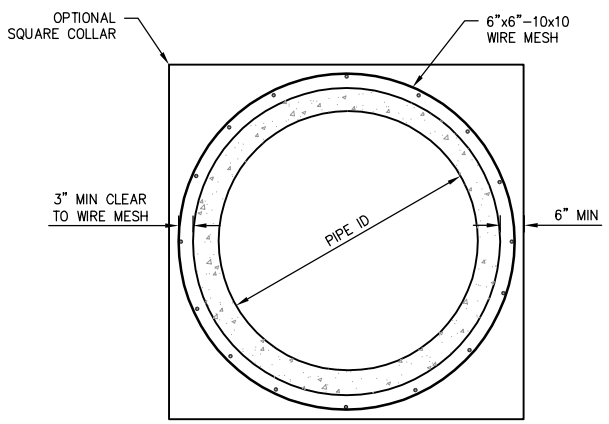

SECTION

NOTE

JOINT TO BE BANDED ON THE INSIDE PRIOR TO PLACING OF COLLAR (HAND HOLE IN EXISTING PIPE IS ALLOWED TO MAKE INSIDE BAND). TWENTY-FOUR HOURS AFTER INSIDE BAND IS MADE, COAT WITH EPOXY OVER BANDED AREA. HAND HOLE PLUG TO BE EPOXIED AT MATCHING SURFACES WITH PIPE AND THEN MORTAR AND PLUG HOLE. WHEN IN PLACE AND SET EXTERNAL COLLAR MUST BE WATERED DOWN TO A POINT OF SATURATION THEN COVERED WITH WET BURLAP AND SHADED WITH SIX INCHES OF SOIL OVER ENTIRE AREA. SAID SOIL MUST BE KEPT MOIST FOR A PERIOD OF FIVE CONTINUOUS DAYS. THE ENTIRE SURFACE OF THE PIPE IN THE COLLAR AREA IS TO BE COATED WITH EPOXY PRIOR TO POURING THE COLLAR.

NOT TO SCALE

A / 9

CONCRETE PIPE JOINT COLLAR

PI-0402

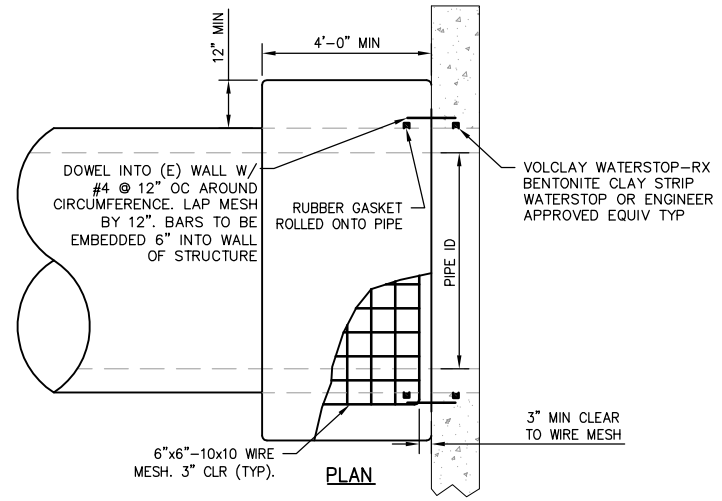

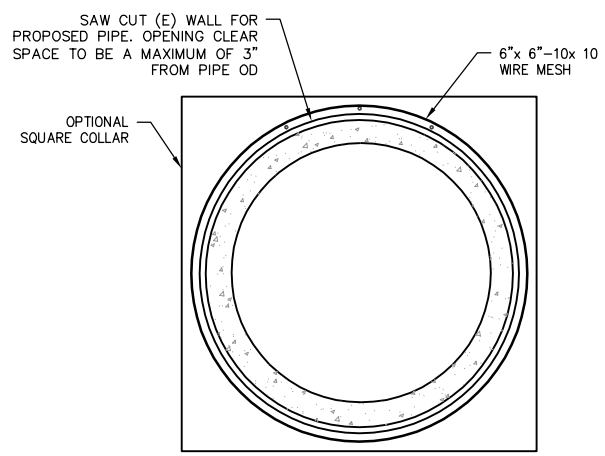

SECTION

NOTE

EXTERNAL COLLAR MUST BE WATERED DOWN TO A POINT OF SATURATION THEN COVERED WITH WET BURLAP AND SHADED WITH SIX INCHES OF SOIL OVER ENTIRE AREA. SAID SOIL MUST BE KEPT MOIST FOR A PERIOD OF FIVE CONTINUOUS DAYS. THE ENTIRE SURFACE OF THE PIPE IN THE COLLAR AREA IS TO BE COATED WITH EPOXY PRIOR TO POURING THE COLLAR.

NOT TO SCALE

B / 9

CONCRETE PIPE HEADWALL COLLAR

PI-0401

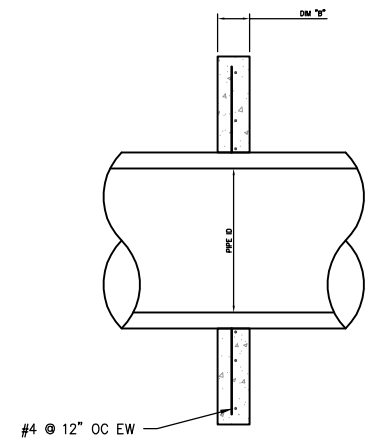

PIPE ID	DIM "A"	DIM "B"
18"	5'-0"	6"
21"	5'-3"	6"
24"	5'-6"	6"
27"	6'-3"	6"
30"	7'-0"	6"
36"	8'-6"	6"
42"	9'-3"	6"
48"	10'-0"	8"
54"	11'-6"	8"
60"	12'-0"	8"

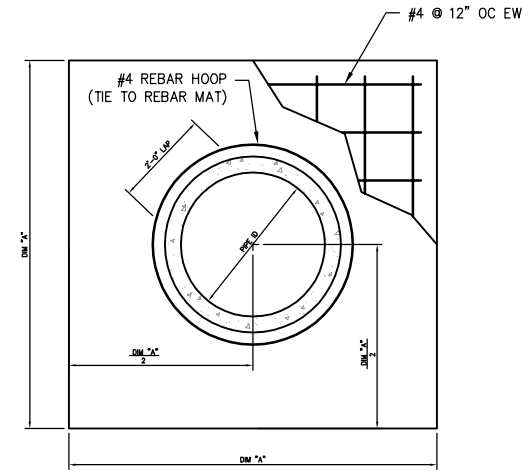

NOT TO SCALE

C / 9

CONCRETE CUTOFF COLLAR

ST-0409

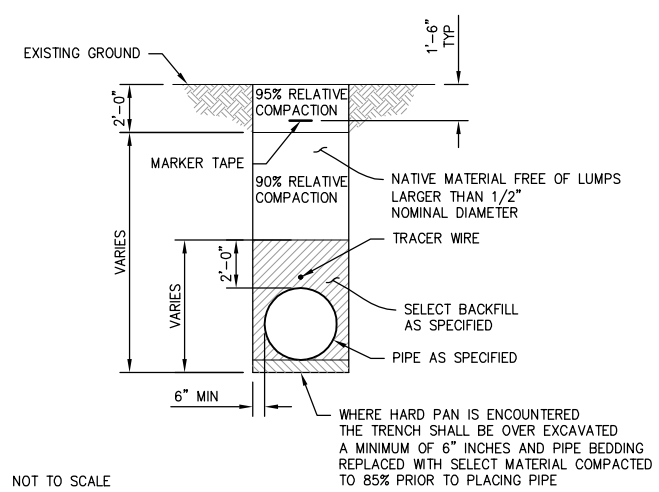

NOT TO SCALE

D / 9

TYPICAL TRENCH BACKFILL NO PAVING

COPYRIGHT 2014 by PROVOST & PRITCHARD
ALL RIGHTS RESERVED
The firm of Provost & Pritchard Engineering Group, Inc. expressly reserves its common law copyright and other property rights in these plans. These plans are not to be reproduced, changed, or copied in any form or manner whatsoever, nor are they to be assigned to any third party without first obtaining the written permission and consent of Provost & Pritchard Engineering Group, Inc. In the event of unauthorized reuse of these plans by a third party, the third party shall hold the firm of Provost & Pritchard Engineering Group, Inc. harmless, and shall indemnify the firm of Provost & Pritchard Engineering Group, Inc.'s legal fees associated with defending and enforcing these rights.

No.	REVISION	BY	DATE

PRELIMINARY
NOT FOR CONSTRUCTION
07/20/2014

REGISTERED PROFESSIONAL ENGINEER
RANDY S. HOPKINS
No. 63538
STATE OF CALIFORNIA

DATE SIGNED:

IN-LIEU PROGRAM
ARVIN-EDISON WATER STORAGE DISTRICT
KERN COUNTY, CA

NORTH IN-LIEU PROJECT
PIPELINE DETAILS

EST. 1968
PROVOST & PRITCHARD
CONSULTING GROUP
An Employee Owned Company
1800 30th STREET, SUITE 280
BAKERSFIELD, CALIFORNIA 93301
661/616-5900 FAX 661/616-5890
www.pandp.com

DESIGN ENGINEER: RANDY S. HOPKINS
LICENSE NO: CE 63,538
DRAFTED BY: JMG | CHECKED BY: MJD
DATE: 07/20/2014
JOB NO: 104814B1
0 1
ORIGINAL SCALE SHOWN IS IN INCHES. ADJUST SCALE FOR REDUCED OR ENLARGED PLANS.

7/20/2014 9:28 PM W:\Clients\Buena Vista WSD-1048\104814B1 DSG App\DWG\SHEET\AEWSD IN-LIEU BANKING PROJECT\9 PIPELINE DETAILS.dwg -John Gudino

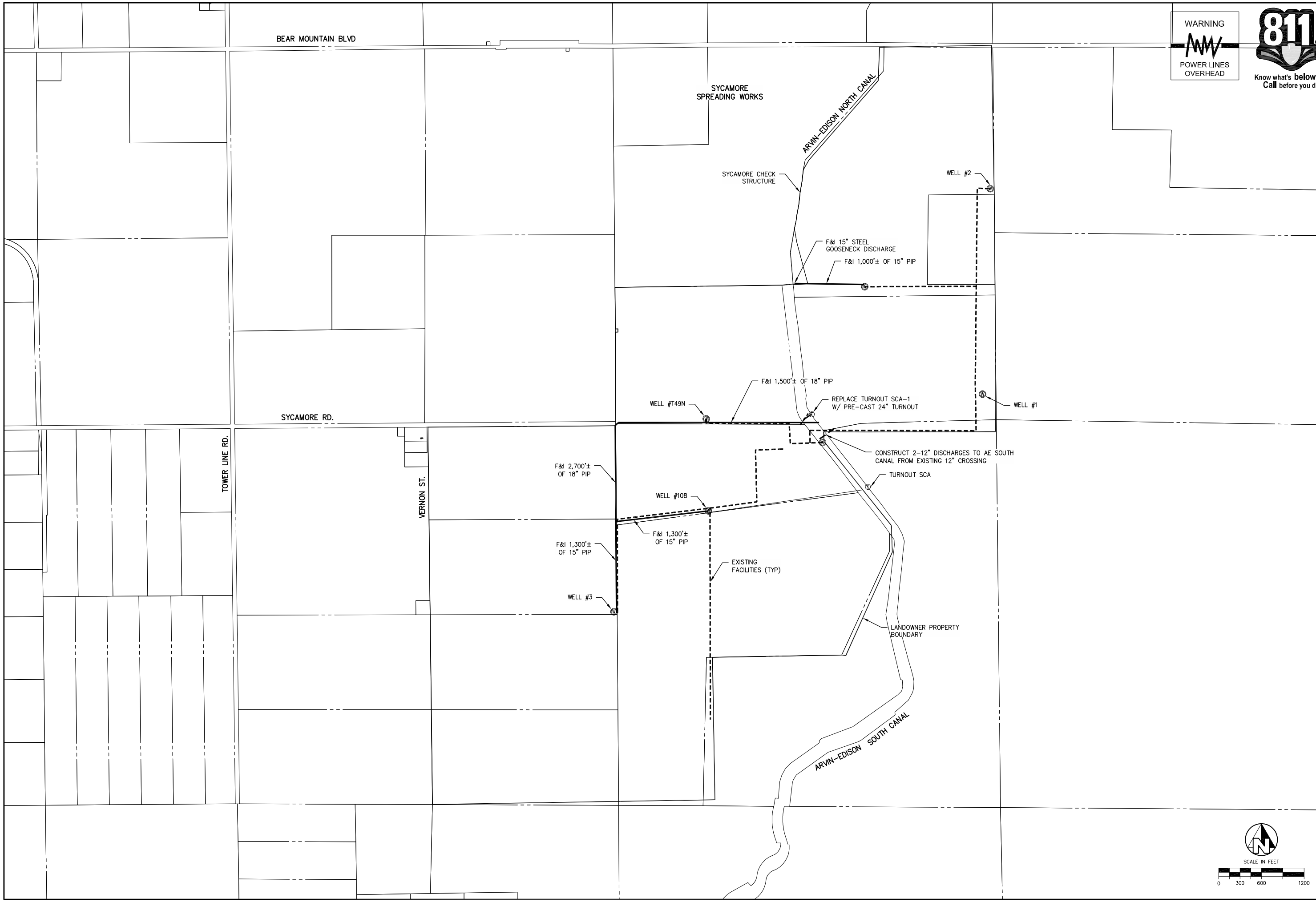

WARNING
POWER LINES OVERHEAD

811 Know what's below. Call before you dig.

COPYRIGHT 2014 by PROVOST & PRITCHARD
RESTRICTIONS OF USE OF DOCUMENTS RESERVED
The firm of Provost & Pritchard Engineering Group, Inc. expressly reserves its common law copyright and other property rights in these plans. These plans are not to be reproduced, changed, or copied in any form or manner whatsoever, nor are they to be assigned to any third party without first obtaining the written permission and consent of Provost & Pritchard Engineering Group, Inc. In the event of unauthorized reuse of these plans by a third party, the third party shall hold the firm of Provost & Pritchard Engineering Group, Inc. harmless, and shall indemnify and defend Provost & Pritchard Engineering Group, Inc.'s legal fees associated with defending and enforcing these rights.

No.	REVISION	BY	DATE

PRELIMINARY
NOT FOR CONSTRUCTION
07/20/2014

REGISTERED PROFESSIONAL ENGINEER
RANDY S. HOPKINS
No. 63538
STATE OF CALIFORNIA

DATE SIGNED:

IN-LIEU PROGRAM
ARVIN-EDISON WATER STORAGE DISTRICT
KERN COUNTY, CA

SYCAMORE IN-LIEU PROJECT
SYCAMORE IN-LIEU SITE PLAN

PROVOST & PRITCHARD
EST. 1954
CONSULTING GROUP
An Employee Owned Company
1800 30th STREET, SUITE 280
BAKERSFIELD, CALIFORNIA 93301
661/616-5900 FAX 661/616-5890
www.ppeng.com

DESIGN ENGINEER: RANDY S. HOPKINS
LICENSE NO: CE 63,538
DRAFTED BY: JMG
CHECKED BY: MJD
DATE: 07/20/2014
JOB NO: 104814B1
0 1
ORIGINAL SCALE SHOWN IS IN INCHES. ADJUST SCALE FOR REDUCED OR ENLARGED PLANS.
SHEET 10 OF 13

7/20/2014 9:29 PM W:\Clients\Buena Vista WSD-1048\104814B1 DSG App\DWG\SHEET\AEWSD IN-LIEU BANKING PROJECT\10 SYCAMORE IN-LIEU SITE PLAN.dwg -John Gudino

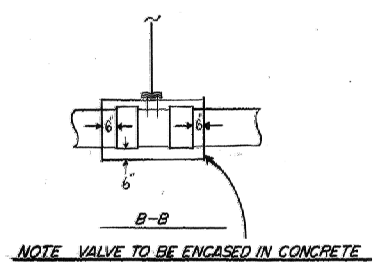

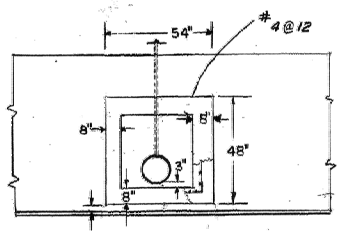

MINIMUM TRENCH WIDTH

PIPE DIA.	MIN. TRENCH WIDTH
14"	2'-6"
18"	3'-0"
24"	3'-9"

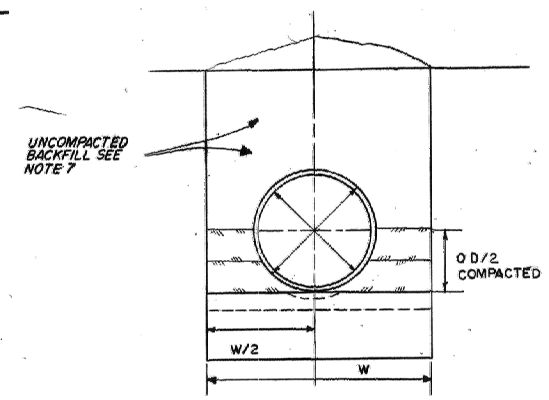

TYPICAL PIPE TRENCH
SEE ABOVE TABLE FOR MINIMUM TRENCH WIDTH

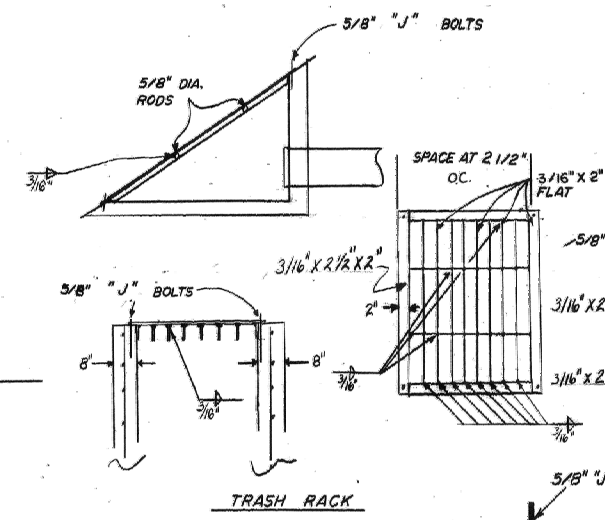

DETAIL A

CANAL T.O. NO.	CANAL STA. NO.	L FEET	L1 FEET	H FEET	I.D. INCHES	S1 FEET	ELEV. A	ELEV. B	ELEV. C	ELEV. D
NC-B	N139+11R	78'	13'	1.5'	24"	14'	497.17	509.71	512.91	509.32
A-86	N469+57R	39'	13'	2.5'	24"	12'	491.91	504.45	506.96	506.55
NC-A	N94+40R	39'	13'	1.5'	14"	15'	497.53	510.07	512.70	508.23
A-87	N77+91R	65'	13'	1.5'	18"	16'	497.66	510.20	514.62	512.78
NC-C	N171+96L	65'	13'	1.5'	14"	16'	496.91	509.45	512.96	512.42
SC-A	S42+64R	39'	8'6"	.75	24"	12'	492.84	501.46	503.13	501.14
SC-E	S288+43R	39'	13'	.75	24"	10'	487.51	496.13	500.79	499.92
SC-F	S357+37L	39'	8'6"	.75	24"	10'	485.72	494.34	495.64	494.81
W-80	S819+09	58'	4.3	.60	24"	10'	476	481	484	484

1 THE PIPE SHALL BE ASBESTOS-CEMENT FT-40 AS MANUFACTURED BY CERTAIN-TEED OR T-40 AS MANUFACTURED BY JM OR APPROVED EQUAL

2 LINE GATE WILL BE INSTALLED AT NORMAL JOINT. LIMIT OF "L" DIMENSION WILL BE AT EVEN JOINT

THE VALVE SHALL BE A LINE GATE MODEL H-30-AC AS MANUFACTURED BY WATERMAN INDUSTRIES INC. OR, AS APPROVED EQUAL. THE CONTRACTOR IS RESPONSIBLE FOR ASSURING A WATER TIGHT JOINT, AS APPROVED BY THE ENGINEER, BETWEEN THE PIPELINE AND THE VALVE.

3 ALL CONCRETE SHALL CONTAIN NOT LESS THAN 5 SACKS OF CEMENT PER CUBIC YARD AND HAVE A MINIMUM 28 DAY COMPRESSIVE STRENGTH OF 3000 P.S.I.

4 COMPACTION REQUIREMENTS ARE 90% OF MAXIMUM DENSITY THIS IS REQUIRED FOR ANY STRUCTURAL BACKFILL, AND/OR CANAL LINER BACKFILL, AND/OR PIPELINE BACKFILL AS SHOWN ON TYPICAL PIPE TRENCH SECTION.

5 WHERE NECESSARY TO CUT CANAL LINER, CUT SHALL BE A NEAT EVEN LINE, AND CANAL LINER SHALL BE RESTORED TO ORIGINAL CONDITION

6 WHERE NECESSARY DISTRICT PERSONAL WILL REMOVE AND RESTORE FENCE. HOWEVER THE CONTRACTOR IS RESPONSIBLE FOR PROTECTION OF THE WORKSITE AND FOR RESTORING THE AREA TO ITS ORIGINAL CONDITION.

7 WHEN PIPELINE IS IN FARM ROAD OR CANAL ROAD UNCOMPACTED BACKFILL SHALL BE WHEEL ROLLED

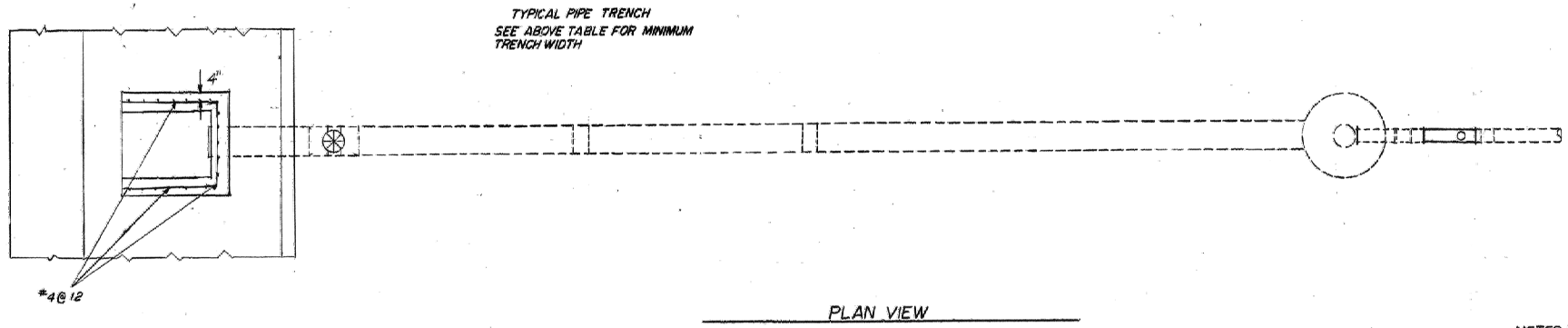

PLAN VIEW

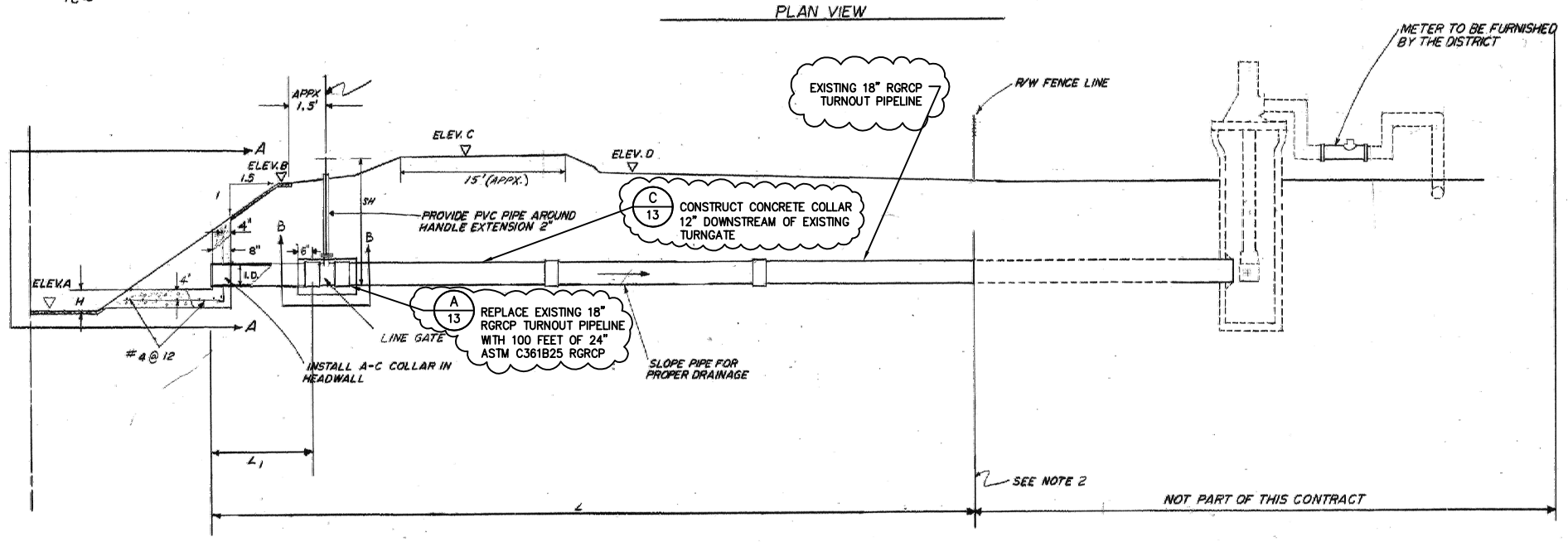

PROFILE VIEW

NOTE: THE LETTERS PRECEDING THE STATION NUMBER DENOTE THE FOLLOWING: N—NORTH CANAL
S—SOUTH CANAL

THE LETTERS FOLLOWING THE STATION NUMBERS DENOTE THE FOLLOWING:
R—RIGHT SIDE OF CANAL GOING WITH THE FLOW
L—LEFT SIDE OF CANAL GOING WITH THE FLOW

REV.	DATE		SUB.	APR
4	6-14-88	CHANGED NC-F TO A-87		
3	1-7-88	ADDED W-80		
2	9/1/83	A-86, SC-E CHANGES AS NOTED		
1	12/1/86	REMOVE W-80		

ARVIN-EDISON WATER STORAGE DISTRICT

CANAL TURNOUTS

DRAWN: PL Hyatt CHECKED:

APPROVED: R.C.E. 25399 DATE: 09-20-1983

DRAWING No. AE-14

NOT TO SCALE

A / 11

CANAL TURNOUT

COPYRIGHT 2014 by PROVOST & PRITCHARD
ALL RIGHTS RESERVED. UNPUBLISHED.
The firm of Provost & Pritchard Engineering Group, Inc. expressly reserves its common law copyright and other property rights in these plans. These plans are not to be reproduced, changed, or copied in any form or manner whatsoever, nor are they to be assigned to any third party without first obtaining the written permission and consent of Provost & Pritchard Engineering Group, Inc. In the event of unauthorized reuse of these plans by a third party, the third party shall hold the firm of Provost & Pritchard Engineering Group, Inc. harmless, and shall defend and indemnify the firm of Provost & Pritchard Engineering Group, Inc.'s legal fees associated with defending and enforcing these rights.

No.	REVISION	BY	DATE

PRELIMINARY
NOT FOR CONSTRUCTION
07/20/2014

REGISTERED PROFESSIONAL ENGINEER — VINCENT J. ROMANO — No. 25399 — STATE OF CALIFORNIA — PRELIMINARY ONLY

DATE SIGNED:

IN-LIEU PROGRAM
ARVIN-EDISON WATER STORAGE DISTRICT
KERN COUNTY, CA

SYCAMORE IN-LIEU PROJECT
TURNOUT SCA-1 MODIFICATION

PROVOST & PRITCHARD
CONSULTING ENGINEERS
A Employee Owned Company
1800 30th STREET, SUITE 280
BAKERSFIELD, CALIFORNIA 93301
661/616-5900 FAX 661/616-5890
www.ppeng.com

DESIGN ENGINEER: RANDY S. HOPKINS
LICENSE NO: CE 63,538
DRAFTED BY: JMG
CHECKED BY: MJD
DATE: 07/20/2014
JOB NO: 104814B1
NOT TO SCALE
SHEET 11 OF 13

7/20/2014 9:31 PM W:\Clients\Buena Vista WSD-10489\104814B1 DSIG App\DWG\SHEET\AEWSD IN-LIEU BANKING PROJECT\11 TURNOUT SCA-1 MODIFICATION.dwg -John Gudino

PIPE SIZE	TOTAL 2" BERMAD AIR & VACUUM RELIEF VALVE	A.	B.
10" PIPE	1	10"X8"X10"	2"
12" PIPE	1	12"X8"X12"	2"
15" PIPE	1	15"X8"X15"	2"
18" PIPE	2	18"X8"X18"	4"
21" PIPE	2	21"X8"X21"	4"
24" PIPE	2	24"X8"X24"	4"

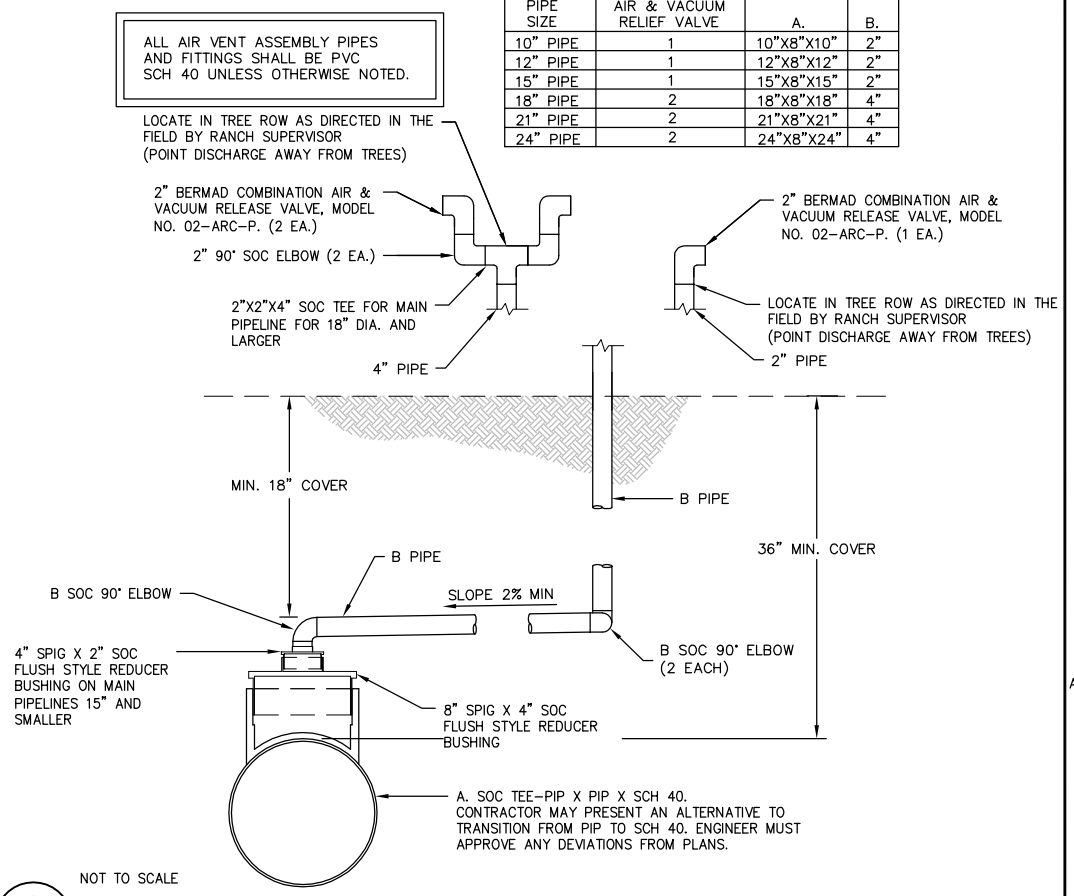

NOT TO SCALE

A / 12

AIR VENT ASSEMBLY

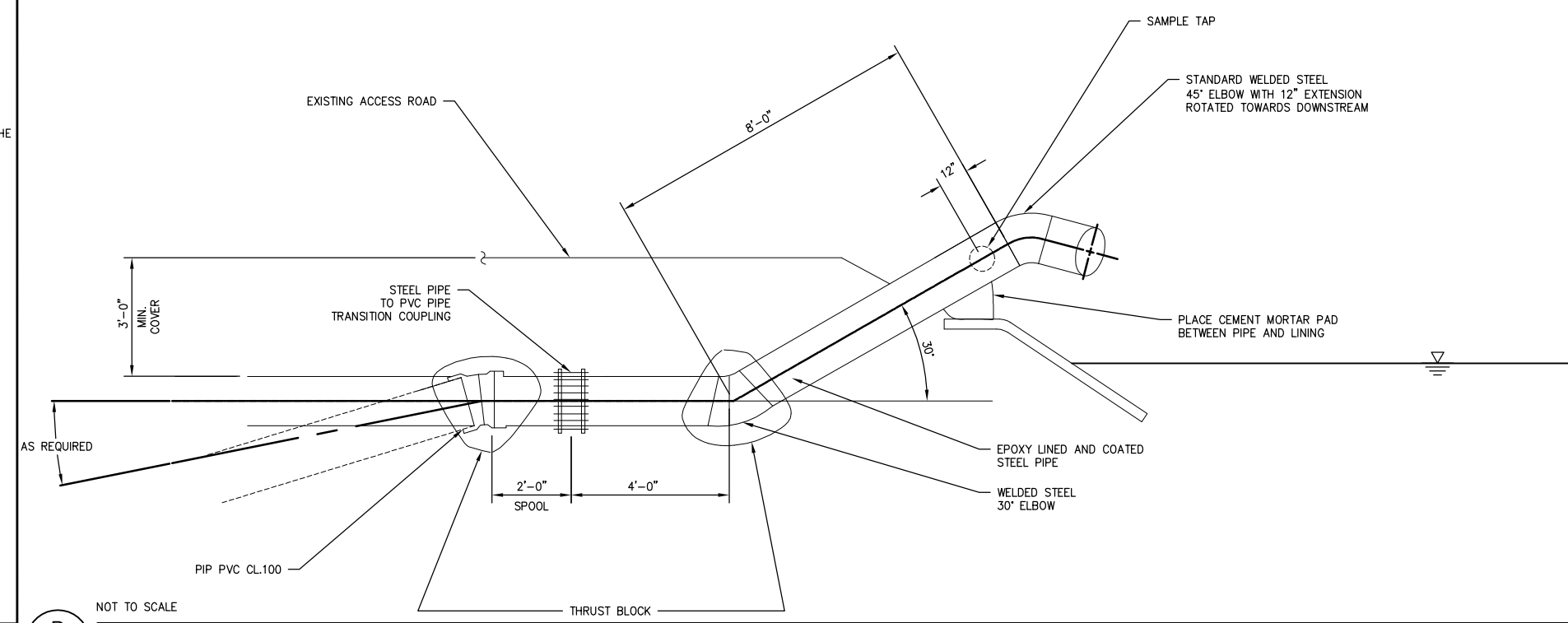

NOT TO SCALE

B / 12

GOOSENECK DISCHARGE

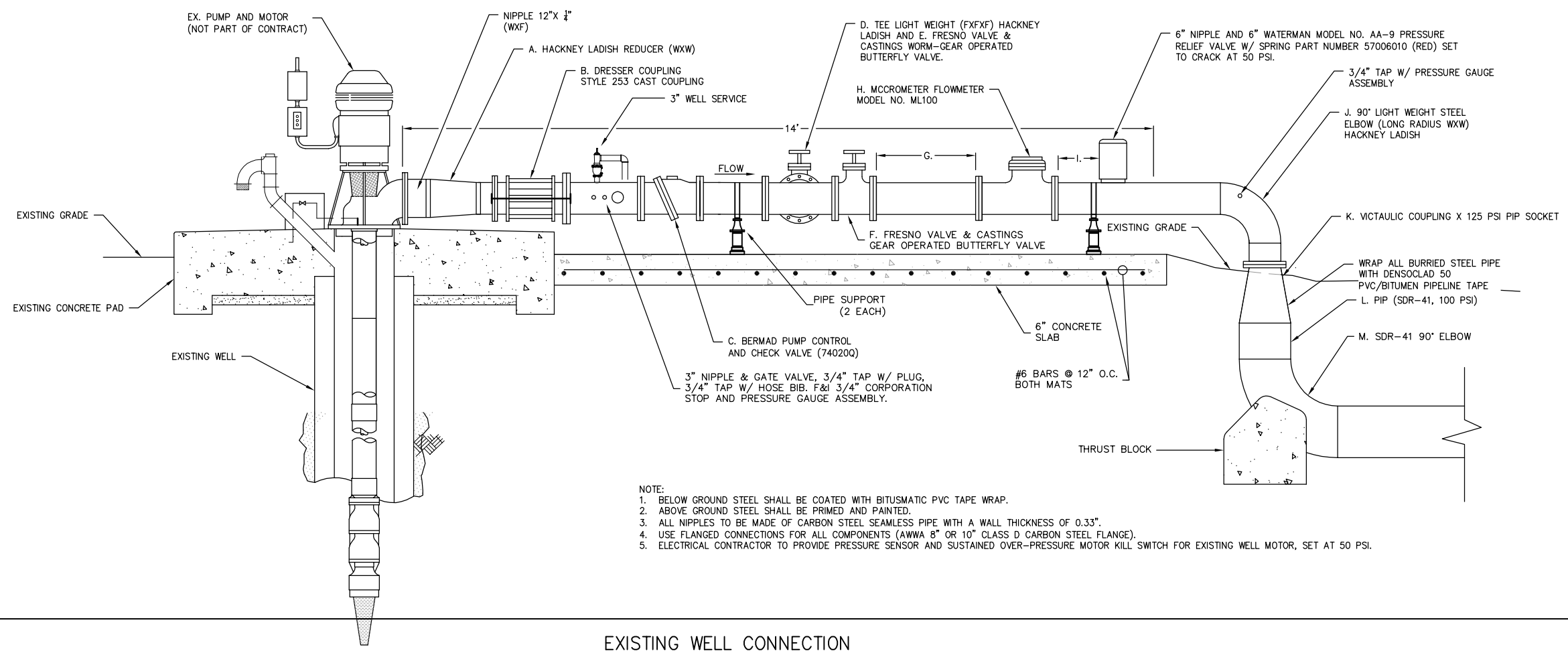

NOTE:
1. BELOW GROUND STEEL SHALL BE COATED WITH BITUSMATIC PVC TAPE WRAP.
2. ABOVE GROUND STEEL SHALL BE PRIMED AND PAINTED.
3. ALL NIPPLES TO BE MADE OF CARBON STEEL SEAMLESS PIPE WITH A WALL THICKNESS OF 0.33".
4. USE FLANGED CONNECTIONS FOR ALL COMPONENTS (AWWA 8" OR 10" CLASS D CARBON STEEL FLANGE).
5. ELECTRICAL CONTRACTOR TO PROVIDE PRESSURE SENSOR AND SUSTAINED OVER-PRESSURE MOTOR KILL SWITCH FOR EXISTING WELL MOTOR, SET AT 50 PSI.

NOT TO SCALE

C / 12

EXISTING WELL CONNECTION

COPYRIGHT 2014 by PROVOST & PRITCHARD
ALL RIGHTS RESERVED
The firm of Provost & Pritchard Engineering Group, Inc. expressly reserves its common law copyright and other property rights in these plans. These plans are not to be reproduced, changed, or copied in any form or manner whatsoever, nor are they to be assigned to any third party without first obtaining the written permission and consent of Provost & Pritchard Engineering Group, Inc. In the event of unauthorized reuse of these plans by a third party, the third party shall hold the firm of Provost & Pritchard Engineering Group, Inc. harmless, and shall reimburse the firm of Provost & Pritchard Engineering Group, Inc.'s legal fees associated with defending and enforcing these rights.

No.	REVISION	BY	DATE

PRELIMINARY
NOT FOR CONSTRUCTION
07/20/2014

REGISTERED PROFESSIONAL ENGINEER — RANDY S. HOPKINS — No. CE 63,538 — STATE OF CALIFORNIA — PRELIMINARY ONLY

DATE SIGNED:

IN-LIEU PROGRAM
ARVIN-EDISON WATER STORAGE DISTRICT
KERN COUNTY, CA

SYCAMORE IN-LIEU PROJECT
PIPELINE DETAILS

EST. 1949
PROVOST & PRITCHARD
CONSULTING ENGINEERS
An Employee Owned Company
1800 30th STREET, SUITE 280
BAKERSFIELD, CALIFORNIA 93301
661/616-5900 FAX 661/616-5890
www.ppeng.com

DESIGN ENGINEER: RANDY S. HOPKINS
LICENSE NO: CE 63,538
DRAFTED BY: JMG | CHECKED BY: MJD
DATE: 07/20/2014
JOB NO: 104814B1
0 — 1
ORIGINAL SCALE SHOWN IS IN INCHES. ADJUST SCALE FOR REDUCED OR ENLARGED PLANS.

7/20/2014 9:32 PM W:\Clients\Buena Vista WSD-1048\104814B1 DSG App\DWG\SHEET\AEWSD IN-LIEU BANKING PROJECT\12 PIPELINE DETAILS.dwg -John Gudino

PI-0402

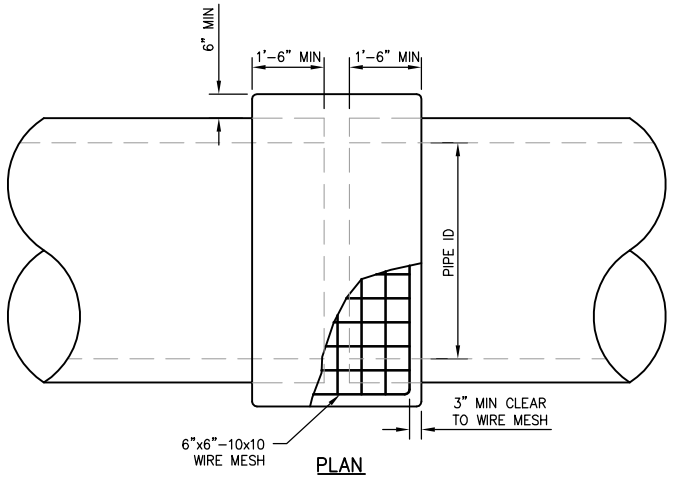

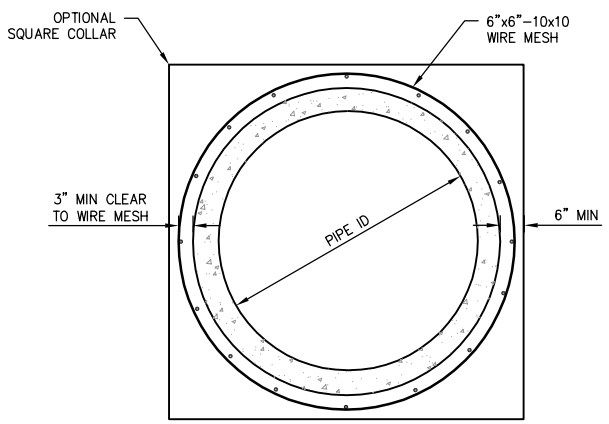

SECTION

NOTE

JOINT TO BE BANDED ON THE INSIDE PRIOR TO PLACING OF COLLAR (HAND HOLE IN EXISTING PIPE IS ALLOWED TO MAKE INSIDE BAND). TWENTY-FOUR HOURS AFTER INSIDE BAND IS MADE, COAT WITH EPOXY OVER BANDED AREA. HAND HOLE PLUG TO BE EPOXIED AT MATCHING SURFACES WITH PIPE AND THEN MORTAR AND PLUG HOLE. WHEN IN PLACE AND SET EXTERNAL COLLAR MUST BE WATERED DOWN TO A POINT OF SATURATION THEN COVERED WITH WET BURLAP AND SHADED WITH SIX INCHES OF SOIL OVER ENTIRE AREA. SAID SOIL MUST BE KEPT MOIST FOR A PERIOD OF FIVE CONTINUOUS DAYS. THE ENTIRE SURFACE OF THE PIPE IN THE COLLAR AREA IS TO BE COATED WITH EPOXY PRIOR TO POURING THE COLLAR.

NOT TO SCALE

A / 13

CONCRETE PIPE JOINT COLLAR

PI-0402

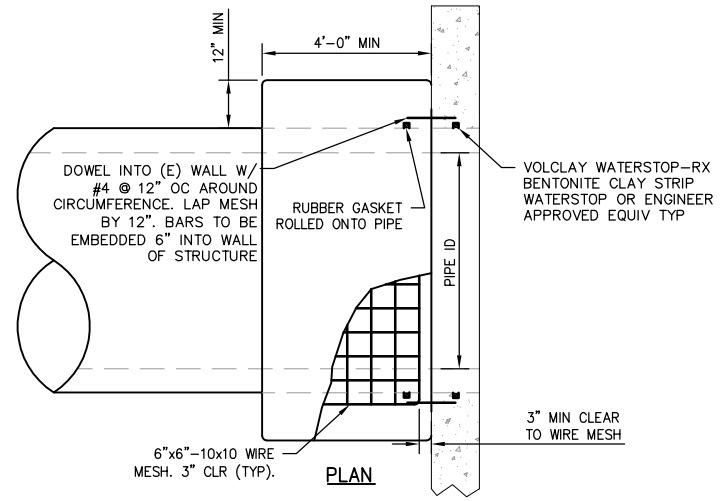

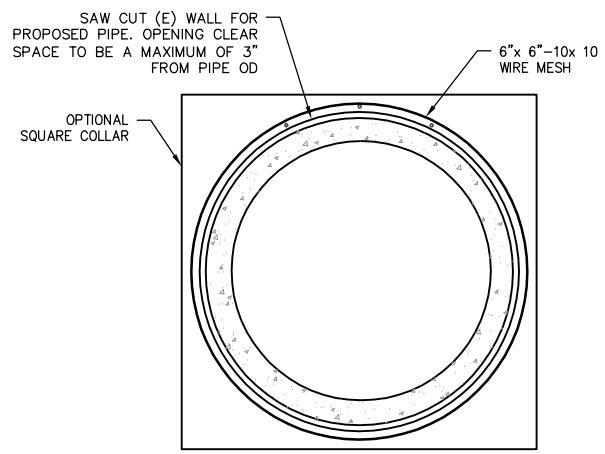

SECTION

NOTE

EXTERNAL COLLAR MUST BE WATERED DOWN TO A POINT OF SATURATION THEN COVERED WITH WET BURLAP AND SHADED WITH SIX INCHES OF SOIL OVER ENTIRE AREA. SAID SOIL MUST BE KEPT MOIST FOR A PERIOD OF FIVE CONTINUOUS DAYS. THE ENTIRE SURFACE OF THE PIPE IN THE COLLAR AREA IS TO BE COATED WITH EPOXY PRIOR TO POURING THE COLLAR.

NOT TO SCALE

B / 13

CONCRETE PIPE HEADWALL COLLAR

PI-0401

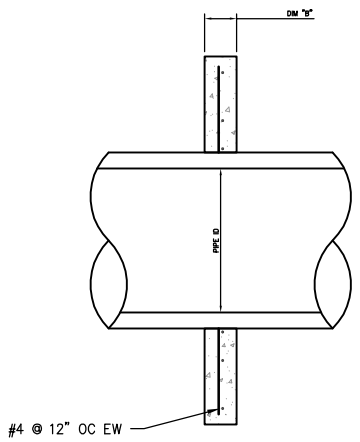

PIPE ID	DIM "A"	DIM "B"
18"	5'-0"	6"
21"	5'-3"	6"
24"	5'-6"	6"
27"	6'-3"	6"
30"	7'-0"	6"
36"	8'-6"	6"
42"	9'-3"	6"
48"	10'-0"	8"
54"	11'-6"	8"
60"	12'-0"	8"

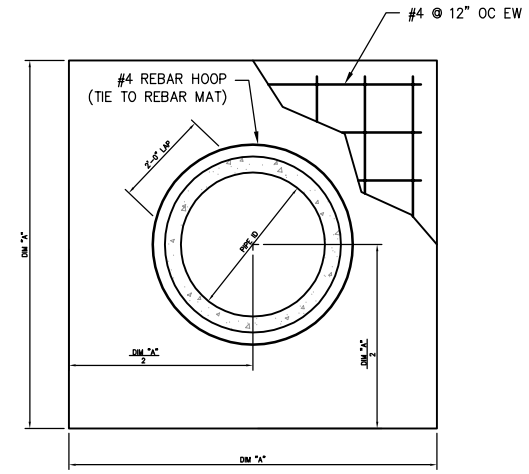

NOT TO SCALE

C / 13

CONCRETE CUTOFF COLLAR

ST-0409

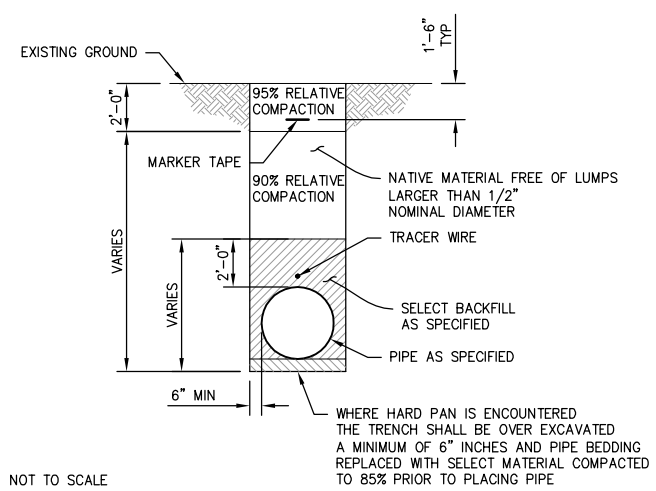

NOT TO SCALE

D / 13

TYPICAL TRENCH BACKFILL NO PAVING

COPYRIGHT 2014 by PROVOST & PRITCHARD
ALL RIGHTS RESERVED
The firm of Provost & Pritchard Engineering Group, Inc. expressly reserves its common law copyright and other property rights in these plans. These plans are not to be reproduced, changed, or copied in any form or manner whatsoever, nor are they to be assigned to any third party without first obtaining the written permission and consent of Provost & Pritchard Engineering Group, Inc. In the event of unauthorized reuse of these plans by a third party, the third party shall hold the firm of Provost & Pritchard Engineering Group, Inc. harmless, and shall indemnify the firm of Provost & Pritchard Engineering Group, Inc.'s legal fees associated with defending and enforcing these rights.

PRELIMINARY
NOT FOR CONSTRUCTION
07/20/2014

No.	REVISION	BY	DATE

REGISTERED PROFESSIONAL ENGINEER — RANDY S. HOPKINS — CIVIL — No. 63538 — STATE OF CALIFORNIA — SEALED ONLY

DATE SIGNED:

IN-LIEU PROGRAM
ARVIN-EDISON WATER STORAGE DISTRICT
KERN COUNTY, CA

SYCAMORE IN-LIEU PROJECT
PIPELINE DETAILS

EST. 1968
PROVOST & PRITCHARD
CONSULTING GROUP
An Employee Owned Company
1800 30th STREET, SUITE 280
BAKERSFIELD, CALIFORNIA 93301
661/616-5900 FAX 661/616-5890
www.pandp.com

DESIGN ENGINEER: RANDY S. HOPKINS
LICENSE NO: CE 63,538
DRAFTED BY: JMG | CHECKED BY: MJD
DATE: 07/20/2014
JOB NO: 104814B1

0 — 1
ORIGINAL SCALE SHOWN IS IN INCHES. ADJUST SCALE FOR REDUCED OR ENLARGED PLANS.

SHEET 13 OF 13

7/20/2014 9:33 PM W:\Clients\Buena Vista WSD-1048\104814B1 DSG App\DWG\SHEET\AEWSD IN-LIEU BANKING PROJECT\13 PIPELINE DETAILS.dwg ~John Gudino

Appendix 3.6-I

Pixley Groundwater Bank Info

South Valley Water Banking Authority

Pixley Groundwater Bank

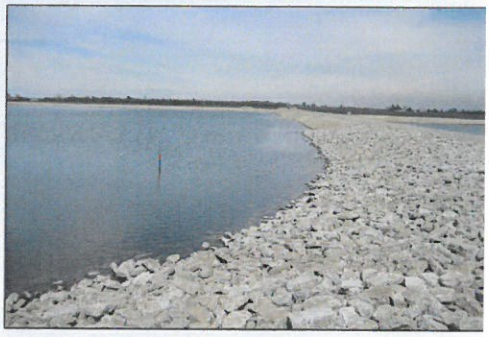
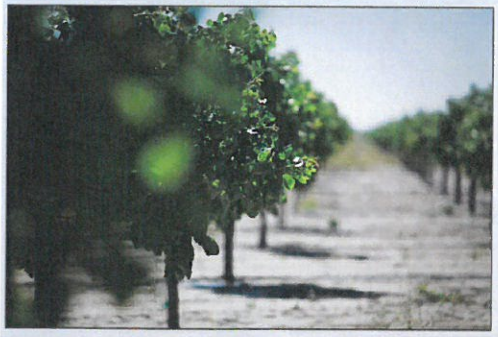

August 2013

Overview

The South Valley Water Banking Authority is offering shares of long-term water banking services through the development of a groundwater banking program in Southern Tulare County, the Pixley Groundwater Bank ("Bank" or "Project").

Project Owners/Developers

Pixley Irrigation District

Pixley ID is an agricultural irrigation district which covers approximately 70,000 acres in southern Tulare County, California. Deer Creek, a local ephemeral stream, flows from east to west through the district. The District enjoys excellent groundwater quality. Depths to static groundwater within Pixley ID average approximately 300 feet. Thus, there is significant groundwater storage potential within the District.

Delano-Earlimart Irrigation District

Delano-Earlimart ID is an agricultural irrigation district which borders Pixley ID to the immediate south in southern Tulare County and northern Kern County. Delano-Earlimart ID has a Friant Division CVP water contract that includes the largest Class One water supply entitlement in the Friant Division. Delano-Earlimart ID encompasses approximately 56,500 acres.

Project Description

The Bank is a 30,000 acre-feet per year dry year return water bank. The Bank's primary facilities will be located in Pixley ID, north of Deer Creek, northwest of the Avenue 80 (alignment) and Road 160 intersection. It is strategically located to be able to accept and return water from/to the Friant-Kern Canal. It is accessible from major eastside streams including the San Joaquin, Kings, Kaweah, and Tule rivers. It is upstream of major potential exchange entities including the largest entitlement holders of Class 1 water in the Friant Division as well as the Kern County Water Agency, the second largest entitlement holder in the State Water Project. Friant Division long-term contractors are the preferred Banking Partners and will be provided the first opportunity to participate in the Bank (priority status will be provided until January 1, 2014).

Pixley Groundwater Bank Facilities

The total groundwater storage currently available from the Project is 90,000 acre-feet. The Project includes 560 acres of dedicated recharge basins with a well field of eleven (11) recovery wells located within the boundaries of this facility. The basins are estimated to have a recharge capacity of approximately 45,000 acre-feet per year (4,000 acre-feet per month) and a recovery capacity of 25,400 acre-feet over an 8 month period.

The Project also includes 2,200 acres of in-lieu banking area with five (5) groundwater recovery wells within the in-lieu service area. The in-lieu service area has a recharge capacity of approximately 6,500 acre-feet per year following a normal irrigation demand. The four wells have a recovery capacity of 8,500 AF over an 8-month period.

A 4.5 mile, 48-inch diameter concrete pipeline will support recovery from the Bank and will convey water from both the well field at the recharge basins and the in-lieu service area back to the Friant-Kern Canal. The 48-inch pipeline will also provide

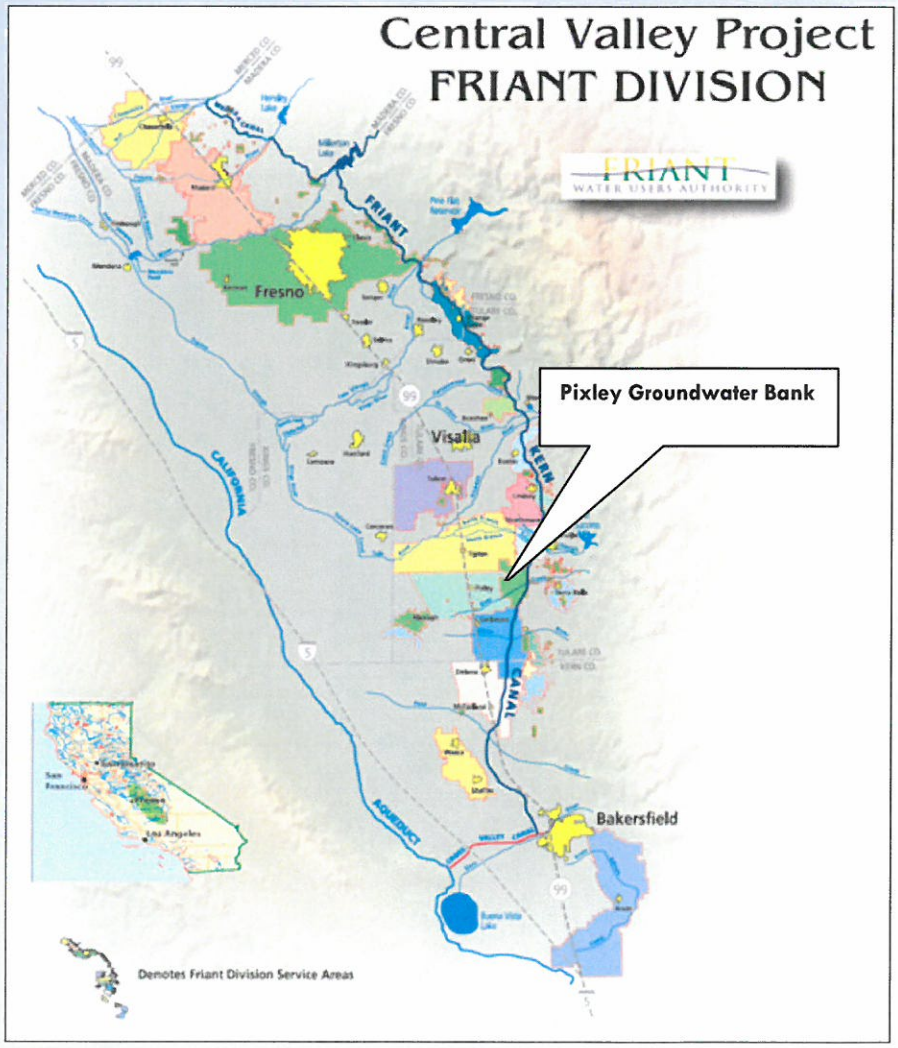

Pixley Groundwater Bank Location

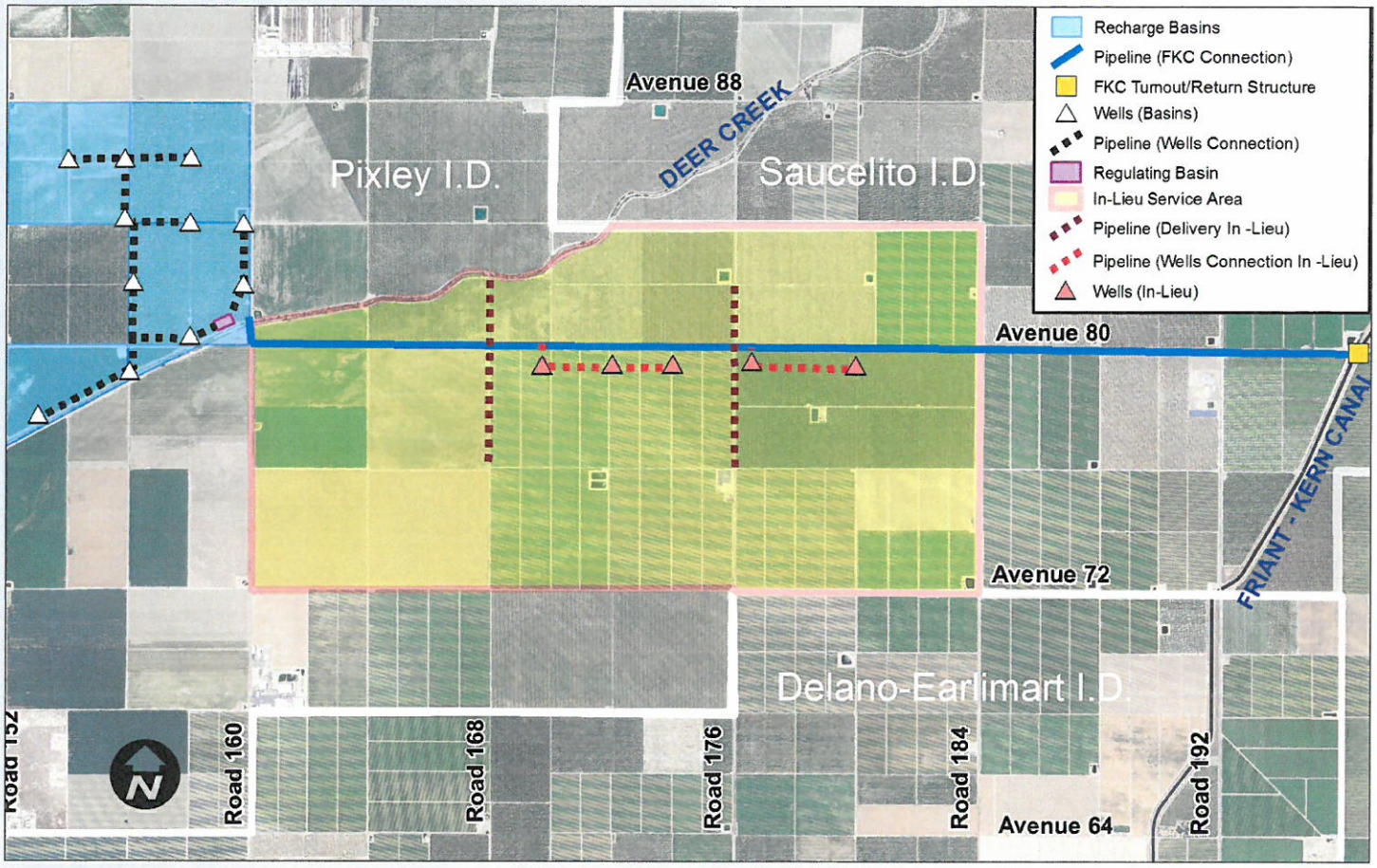

Pixley Groundwater Banking Facilities

gravity delivery of supplies from the Friant-Kern Canal to growers in the in-lieu service area for irrigation and to the recharge basins for direct recharge. Deer Creek can also be used for delivery of water to the basins and for recharge. The Project will recover banked groundwater supplies with delivery of those supplies to the Friant-Kern Canal to meet demands of CVP contractors and/or Kern County interests that can receive water from the Friant-Kern or Cross Valley canals.

Banking Operations and Rate Structure

Banking Partners will provide water for recharge in the Bank and pay all cost of acquisition and delivery of water to the Bank. Effective delivery of water is canal-side in the Friant-Kern Canal at the new turnout location near the Road 80 crossing or at the Deer Creek turnout when available.

Firm Banking Shares

The Banking Program has 30,000 shares that will provide firm dry year return of water. Each share entitles the Banking Partner to:

- One(1) acre-foot per year of scheduled recharge capacity
- One (1) acre-foot per year of scheduled recovery capacity
- Three (3) acre-feet of storage capacity in the Bank

The delivery point of water returned to Banking Partners can be either Millerton Lake or at the Bank's Friant–Kern Canal turnout.

Losses

Water left behind for loss purposes and for the benefit of the groundwater basin is ten (10) percent of the water placed into the Bank.

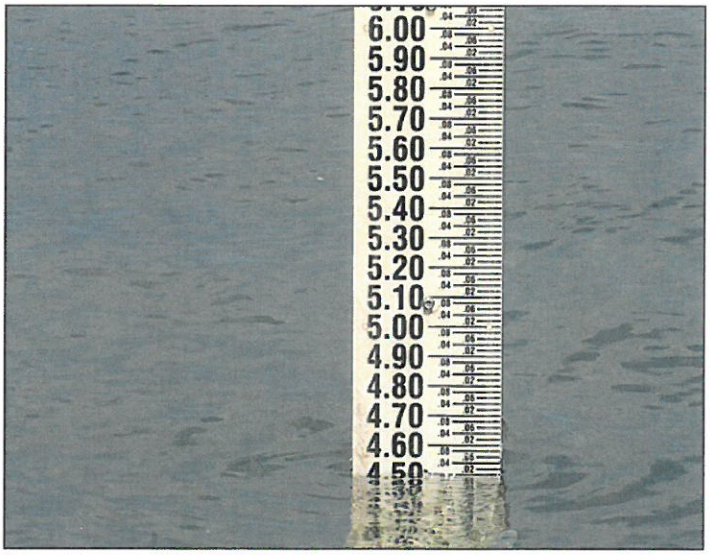

Capital Payments

The cost to purchase shares in the Bank will be due prior to construction. Shares are currently offered at $1,750 per share. 500 shares is the minimum amount to be sold and 10,000 shares is the maximum amount to be sold to any one Banking Partner. A non-refundable deposit of $100 per share will be required immediately to hold position and terms as a Banking Partner. This deposit will be applied against the share cost.

RWA Account Offset

15,000 shares in the Bank were partially developed with federal funding provided to assist in offsetting San Joaquin River Restoration impacts to long-term Friant Division CVP contractors. Delano-Earlimart ID has already purchased 10,000 of these shares. The Bank is offering the first right of refusal to Friant Division long-term contractors for the purchase of the balance of the 5,000 shares. Friant long-term contractors exercising this first right of refusal by October 1, 2013, will receive a proportionate amount of the 5,000 shares based upon their total requested share subscription. Participants in RWA Offset will be required to extinguish one (1) RWA credit for each acre-foot of water delivered to the Bank. Use of Settlement Article 16(b) water (often referred to as "$10 Water") for the Bank will not require the extinguishment of an additional RWA credit when using the Bank. Friant long-term contractors willing to commit RWA credits with water to be stored in the Bank will receive an initial buy-in credit for Firm Shares in the Bank in the amount of $250 per share. The credit can be applied to the Capital Payment or held in trust and applied to Annual Management Fees.

Annual Management Fee

The fee for the first three years following completion of the Bank has been set at $21 per share per year and includes:

- Administration
- Water quality monitoring
- Annual reporting to Banking Partners
- Half of estimated long-term rehabilitation and replacement funding of Bank facilities
- Regular maintenance of Bank facilities

This fee will be subject to adjustment on an annual basis after the first three years.

Usage Fees

The initial fee or its estimate are as follows:

- Recharge Fee – There is no fee charged when water is deposited in the Bank. This is a unique feature of the Pixley Groundwater Bank as compared to other regional groundwater banks.
- Recovery Fee – $30 per acre-foot recovered from the Bank to cover costs of recovery operations and approximately half of the estimated long-term rehabilitation and replacement funding.
- Recovery Energy Fee – Currently estimated at $105 per acre-foot recovered from the Bank. The Recovered Energy Fee will be pass-through energy costs only.

Development Schedule

Task/Phase	Schedule
Subscription of Project Shares	October 2013 – June 2014
Develop Plans/CEQA & NEPA	August 2013 – October 2014
Property Acquisition	June 2014 – January 2015
Facility Construction	June 2015 – October 2017
Project Operational for Recharge	November 2016
Project Operational for Recovery	November 2017

For more information contact:

Daniel G. Vink, Manager, Pixley Irrigation District
Telephone: (559) 686-4716 • Email: DVink@LTRID.org

Dale R. Brogan, Manager, Delano-Earlimart Irrigation District
Telephone: (661) 725-2526 • Email: DBrogan@DEID.org

Appendix 3.6-J

Semitropic WSD Rate Structure for Customers

1101 Central Avenue, P.O. Box 8043, Wasco, California 93280-0877

Telephone: (661) 758-5113 Bakersfield: (661) 327-7144
Facsimile: (661) 758-3219 Email: mail@semitropic.com
Website: www.semitropic.com

RATE STRUCTURE FOR CUSTOMERS

Adopted By the Semitropic Board Oct. 25, 2012

Total Semitropic Permitted Program Capacities at Full Build out:

ITEM	FIRM CAPACITY		FIRM TOTAL	ADDITIONAL WHEN AVAILABLE[1]
	Original Program	Stored Water Recovery Unit		
Recovery	90,000 AF/Yr	200,000 AF/Yr	290,000 AF/Yr	287,000 AF/Yr
Storage	1.0 M AF	650,000 AF	1.65 M AF	350,000 AF
Recharge	90,500AF/Yr	200,000 AF/Yr	233,000 AF/Yr	430,000 AF/Yr

[1] Additional capacity in the Semitropic Water Bank that may be used when not used by Semitropic and other Banking Partners includes:

a) Recharge:

- Up to 400,000 AF/Yr in Semitropic when not used by Semitropic for other purposes.
- Semitropic's capacity in the Kern Water Bank (KWB) of 30,000 AF/Yr,
- Other capacity in the KWB not used by participants other than Semitropic.

b) Recovery:

- 14,000 AF/Yr of Semitropic's capacity in the KWB.
- 133,000 AF of SWP entitlement in Semitropic.
- 200,000 AF/Yr of SWRU Pumpback and 90,000 AF/Yr of Original Project Pumpback.
- KWB Pumpback not used by KWB participants.

All Banking Partners/ Customers that have a firm capacity will also have a Second Priority right in the entire Semitropic Banking Program.

Losses

Losses or water left behind offset transportation losses and for the benefit of the groundwater basin is 10%.

Definition of One Unit/Share of firm service in the SWRU:

ITEM	SWRU
Recovery	1.0 AF/Yr
Storage	3 AF
Recharge	1.0 AF/Yr

TOTAL SHARES AVAILABLE in the SWRU from Semitropic as of October, 2012 is:

- 21,500 in Area A (i.e. Integrated with the Original Program)

Rate Structure

The Rate Structure guidelines for negotiating the cost for acquiring shares as approved by the Semitropic Board of Directors are as follows:

I Capital Payments

Cost per unit/share:

Area A - Negotiable (For 1-4,999)
-$1, 350 per share (For 5,000 to 21,500 shares)

Capital costs are due up front and may be financed by Customers or, if there are a number of smaller groups of Customers, Semitropic on behalf of Customers may be able to assist arranging financing.

Because of uncertainties in water quality requirements for commingling raw water prior to treatment for human consumption, Semitropic assumes responsibility for water quality for recovering of Stored Water up to the requirements described in the "Aqueduct Pump In Proposal" dated July 16, 2007 which is considered a blend of water made up of direct pump in, exchanged water and SWP entitlement. In this proposal of direct pump in, prior to blending, arsenic averaged 12 ppb, slightly above current public health standards. If standards change or become more restrictive for co-mingling raw water, customers will be asked to assist Semitropic in establishing reliable long term standards and be required to pay for any additional costs to meet those standards.

Federal and/or State grant funds, etc. will be applied as a credit or reduction in capital costs on a per Share/Unit basis for all Customers participating in Area A.

II Annual Payments

Management Fee - $6.00 Per Share Per Year
Maintenance Fee - $8.00 Per Share Per Year

The maintenance fee will initially be charged at this rate for all Customers and then be adjusted to actual costs when long-term actual costs are determined based on an agreed upon maintenance plan and ultimately be limited to a reasonable reserve for maintenance and replacement of facilities. A "Project Facilities Maintenance Guidelines" sets forth the guidelines for mutually acceptable maintenance procedures of Project facilities will be attached to each Customer's participation agreement.

III Usage Fee (Includes mitigation of impacts on existing adjacent pumpers)

Area A

Recharge - $12.00 Per AF when water is received for storage
Recovery- $82.00 Per AF plus actual energy when water is recovered from Storage and conveyed to California Aqueduct.

All costs and fees are based on 2012 dollars and, except for the Maintenance Fee, are escalated on the same basis as existing SWSD banking program agreement escalators.

Note: The Original Semitropic Water Bank, having one million acre-foot of storage was established in 1994, is now sold out but its facilities may be used by all Stored Water Recovery Unit (SWRU) participants, on a when available basis.

Appendix 3.6-K

In-Lieu Program Alternative Cost Analysis

APPENDIX 3.6-K: IN-LIEU PROGRAM ALTERNATIVE COST ANALYSIS

Semitropic WSD Stored Water Recovery Project

Definition of One Unit/Share:

			AEWSD In-lieu Program Maximums	
Recovery	1.0	AF/Yr	10,000	governs - AEWSD would need 10,000 shares
Storage	3.0	AF	20,934	
Recharge	1.0	AF/Yr	2,954	

Capital Payment:	$1,350	per share	$13,500,000	AEWSD Capital Payment
Management Fee:	$6.00	per share per year	$60,000.00	Fees per year

Usage Fee:

Recharge:	$12.00	per AF
Recovery:	$82.00	per AF
Water Purchase Cost:	$10.00	per AF

All costs in 2012 dollars and will be escalated on same basis as SWSD banking program except for Maintenance Fee

10% loss applies to all banked water

AEWSD In-Lieu Program

	239	kWh/AF	FFPP Energy Use
	$0.0800	/kWh	AEWSD PWRPA Power Cost
	$19.12	/ AF	Energy Cost of Recharge
	$3.00	/AF	Recharge Assumed O&M for In-lieu Program Facilities
6 wells	701	kWh/ AF	North Area Well Energy Use for Recovery
7 wells	759	kWh/ AF	Sycamore Area Well Energy Use for Recovery
	732	kWh/AF	Average Well Energy Use
	30	psi	Assumed booster pressure to recover water
	70%	OPE	Assumed booster efficiency
	101	kWh/ AF	Estimated booster energy use for recovery

Capital Cost $2,824,600 without factoring grant funds

Management Fee: $0.00

Usage Fee:

Recharge:	$22.12	per AF
Recovery:	$66.69	per AF
Water Purchase Cost:	$10.00	per AF

Pixley Groundwater Bank

Definition of One Unit/Share:

			AEWSD In-lieu Program Maximums	
Recovery	1.0	AF/Yr	10,000	governs - AEWSD would need 10,000 shares
Storage	3.0	AF	20,934	
Recharge	1.0	AF/Yr	2,954	

Capital Payment:	$1,750	per share	$17,500,000	AEWSD Capital Payment
Management Fee:	$21.00	per share per year	$210,000.00	Fees per year

Usage Fee:

Recharge:	$0.00	per AF
Recovery:	$30.00	per AF
Water Purchase Cost:	$10.00	per AF

All costs in 2012 dollars and will be escalated on same basis as SWSD banking program except for Maintenance Fee

Opportunity to Purchase RWA Credits

APPENDIX 3.6-K: IN-LIEU PROGRAM ALTERNATIVE COST ANALYSIS

(A)	(B)	(C)	(E)	(F)	(G)	(H)	(I)	(J)	(K)	(L)	(M)	(N)	(O)	(P)	(Q)	(R)
					SWSD Stored Water Recovery Project				Pixley Groundwater Bank				AEWSD In-Lieu Program			
Contract Year [1]	Analysis Year [2]	Water Recharged (AF) [3]	Drought Relief Water Supply Produced (AF) [4]	Discount Factor [5]	Capital & Mgmt ($) [6]	Recharge Fee ($) [7]	Recovery Fee ($) [8]	Adjusted Cost ($) [9]	Capital & Mgmt ($) [10]	Recharge Fee ($) [11]	Recovery Fee ($) [12]	Adjusted Cost ($) [13]	Capital & Mgmt ($) [14]	Recharge Fee ($) [15]	Recovery Fee ($) [16]	Adjusted Cost ($) [17]
N/A	2014	0	0	1.00	$13,500,000	$0	$0	$13,500,000	$17,500,000	$0	$0	$17,500,000	$2,824,600	$0	$0	$2,824,600
1945	2015	0	0	0.89	$60,000	$0	$0	$53,400	$210,000	$0	$0	$186,900	$0	$0	$0	$0
1946	2016	0	0	0.84	$60,000	$0	$0	$50,400	$210,000	$0	$0	$176,400	$0	$0	$0	$0
1947	2017	0	0	0.792	$60,000	$0	$0	$47,520	$210,000	$0	$0	$166,320	$0	$0	$0	$0
1948	2018	0	0	0.747	$60,000	$0	$0	$44,820	$210,000	$0	$0	$156,870	$0	$0	$0	$0
1949	2019	0	0	0.705	$60,000	$0	$0	$42,300	$210,000	$0	$0	$148,050	$0	$0	$0	$0
1950	2020	2,954	0	0.665	$60,000	$64,988	$0	$83,117	$210,000	$29,540	$0	$159,294	$0	$94,882	$0	$63,097
1951	2021	2,743	0	0.627	$60,000	$60,346	$0	$75,457	$210,000	$27,430	$0	$148,869	$0	$88,105	$0	$55,242
1952	2022	2,511	0	0.592	$60,000	$55,242	$0	$68,223	$210,000	$25,110	$0	$139,185	$0	$80,653	$0	$47,747
1953	2023	0	0	0.558	$60,000	$0	$0	$33,480	$210,000	$0	$0	$117,180	$0	$0	$0	$0
1954	2024	0	0	0.527	$60,000	$0	$0	$31,620	$210,000	$0	$0	$110,670	$0	$0	$0	$0
1955	2025	2,954	0	0.497	$60,000	$64,988	$0	$62,119	$210,000	$29,540	$0	$119,051	$0	$94,882	$0	$47,157
1956	2026	2,511	0	0.469	$60,000	$55,242	$0	$54,048	$210,000	$25,110	$0	$110,267	$0	$80,653	$0	$37,826
1957	2027	0	0	0.442	$60,000	$0	$0	$26,520	$210,000	$0	$0	$92,820	$0	$0	$0	$0
1958	2028	2,511	0	0.417	$60,000	$55,242	$0	$48,056	$210,000	$25,110	$0	$98,041	$0	$80,653	$0	$33,632
1959	2029	0	0	0.394	$60,000	$0	$0	$23,640	$210,000	$0	$0	$82,740	$0	$0	$0	$0
1960	2030	0	0	0.371	$60,000	$0	$0	$22,260	$210,000	$0	$0	$77,910	$0	$0	$0	$0
1961	2031	0	10,000	0.35	$60,000	$0	$820,000	$308,000	$210,000	$0	$300,000	$178,500	$0	$0	$666,885	$233,410
1962	2032	0	0	0.331	$60,000	$0	$0	$19,860	$210,000	$0	$0	$69,510	$0	$0	$0	$0
1963	2033	0	0	0.312	$60,000	$0	$0	$18,720	$210,000	$0	$0	$65,520	$0	$0	$0	$0
1964	2034	0	0	0.294	$60,000	$0	$0	$17,640	$210,000	$0	$0	$61,740	$0	$0	$0	$0
1965	2035	0	0	0.278	$60,000	$0	$0	$16,680	$210,000	$0	$0	$58,380	$0	$0	$0	$0
1966	2036	0	0	0.262	$60,000	$0	$0	$15,720	$210,000	$0	$0	$55,020	$0	$0	$0	$0
1967	2037	2,511	0	0.247	$60,000	$55,242	$0	$28,465	$210,000	$25,110	$0	$58,072	$0	$80,653	$0	$19,921
1968	2038	2,682	0	0.233	$60,000	$59,004	$0	$27,728	$210,000	$26,820	$0	$55,179	$0	$86,146	$0	$20,072
1969	2039	2,511	0	0.22	$60,000	$55,242	$0	$25,353	$210,000	$25,110	$0	$51,724	$0	$80,653	$0	$17,744
1970	2040	0	0	0.207	$60,000	$0	$0	$12,420	$210,000	$0	$0	$43,470	$0	$0	$0	$0
1971	2041	0	0	0.196	$60,000	$0	$0	$11,760	$210,000	$0	$0	$41,160	$0	$0	$0	$0
1972	2042	0	0	0.185	$60,000	$0	$0	$11,100	$210,000	$0	$0	$38,850	$0	$0	$0	$0
1973	2043	2,743	0	0.174	$60,000	$60,346	$0	$20,940	$210,000	$27,430	$0	$41,313	$0	$88,105	$0	$15,330
1974	2044	2,743	0	0.164	$60,000	$60,346	$0	$19,737	$210,000	$27,430	$0	$38,939	$0	$88,105	$0	$14,449
1975	2045	0	0	0.155	$60,000	$0	$0	$9,300	$210,000	$0	$0	$32,550	$0	$0	$0	$0
1976	2046	0	10,000	0.146	$60,000	$0	$820,000	$128,480	$210,000	$0	$300,000	$74,460	$0	$0	$666,885	$97,365
1977	2047	2,682	9,374	0.138	$60,000	$59,004	$768,668	$122,499	$210,000	$26,820	$281,220	$71,490	$0	$86,146	$625,138	$98,157
1978	2048	2,511	0	0.13	$60,000	$55,242	$0	$14,981	$210,000	$25,110	$0	$30,564	$0	$80,653	$0	$10,485
1979	2049	2,743	0	0.123	$60,000	$60,346	$0	$14,803	$210,000	$27,430	$0	$29,204	$0	$88,105	$0	$10,837
1980	2050	2,511	0	0.116	$60,000	$55,242	$0	$13,368	$210,000	$25,110	$0	$27,273	$0	$80,653	$0	$9,356
1981	2051	0	0	0.109	$60,000	$0	$0	$6,540	$210,000	$0	$0	$22,890	$0	$0	$0	$0
1982	2052	2,511	0	0.103	$60,000	$55,242	$0	$11,870	$210,000	$25,110	$0	$24,216	$0	$80,653	$0	$8,307
1983	2053	2,511	0	0.097	$60,000	$55,242	$0	$11,178	$210,000	$25,110	$0	$22,806	$0	$80,653	$0	$7,823
1984	2054	0	0	0.092	$60,000	$0	$0	$5,520	$210,000	$0	$0	$19,320	$0	$0	$0	$0
1985	2055	2,954	0	0.087	$60,000	$64,988	$0	$10,874	$210,000	$29,540	$0	$20,840	$0	$94,882	$0	$8,255
1986	2056	2,511	0	0.082	$60,000	$55,242	$0	$9,450	$210,000	$25,110	$0	$19,279	$0	$80,653	$0	$6,614
1987	2057	0	0	0.077	$60,000	$0	$0	$4,620	$210,000	$0	$0	$16,170	$0	$0	$0	$0
1988	2058	0	0	0.073	$60,000	$0	$0	$4,380	$210,000	$0	$0	$15,330	$0	$0	$0	$0
1989	2059	0	0	0.069	$60,000	$0	$0	$4,140	$210,000	$0	$0	$14,490	$0	$0	$0	$0
1990	2060	0	0	0.065	$60,000	$0	$0	$3,900	$210,000	$0	$0	$13,650	$0	$0	$0	$0
1991	2061	0	0	0.061	$60,000	$0	$0	$3,660	$210,000	$0	$0	$12,810	$0	$0	$0	$0
1992	2062	0	0	0.058	$60,000	$0	$0	$3,480	$210,000	$0	$0	$12,180	$0	$0	$0	$0
1993	2063	0	0	0.054	$60,000	$0	$0	$3,240	$210,000	$0	$0	$11,340	$0	$0	$0	$0
1994	2064	0	0	0.051	$60,000	$0	$0	$3,060	$210,000	$0	$0	$10,710	$0	$0	$0	$0
						SWSD Project Subtotal =		$15,210,447		Pixley Groundwater Bank Subtotal =		$20,949,515		AEWSD In-Lieu Program =		$3,687,427

NOTES:

1/ Historical Water Contract Year used for 50-year benefits analysis.
2/ Analysis Water Contract Year corresponding to the Historical Water Contract Year [Col (A)] used for the 50-year benefits analysis.
3/ Water conserved due to Friant-Kern surplus surface water delivered to the project area during the water contract year (see Benefits Analysis)
4/ Drought relief water recovered during 'critical' water years to provide drought protection for AEWSD's surface water service area (see Benefits Analysis).
5/ Discount factor for 6% interest rate.
6/ Capital cost (10,000 shares x $1,350/share) and management costs (10,000 shares x $6/share-year).
7/ Recharge fee [{$12/af + $10/af} x Col (C)].
8/ Recovery fee [$82/af x Col (D)].
9/ Discount factor adjusted cost [Col (F) x {Col (G) + Col (H) + Col (I)}].
10/ Capital cost (10,000 shares x $1,750/share) and management costs (10,000 shares x $21/share-year).
11/ Recharge fee [{$0/af + $10/af} x Col (C)].
12/ Recovery fee [$30/af x Col (D)].
13/ Discount factor adjusted cost [Col (F) x {Col (K) + Col (L) + Col (M)}].
14/ Capital cost ($2,824,600) and management costs ($0/year).
15/ Recharge fee [{$22.12/af + $10/af} x Col (C)].
16/ Recovery fee [$66.69/af x Col (D)].
17/ Discount factor adjusted cost [Col (F) x {Col (O) + Col (P) + Col (Q)}].

Appendix 3.6-L

In-Lieu Program Engineer's Opinion of Probable Program Cost

ARVIN-EDISON WATER STORAGE DISTRICT
IN-LIEU PROGRAM

ENGINEER'S OPINION OF PROBABLE PROGRAM COST
JULY 21, 2014

Construction Cost Estimate:

ITEM NO.	ESTIMATED QUANTITY Qty.	Unit	ITEM DESCRIPTION	UNIT PRICE		SUBTOTAL
NORTH CANAL PUMP BACK PROJECT						
1	1	LS	Mobilization, Demobilization, Bonds, Insurance	$ 15,000	/ LS	$ 15,000
2	1	LS	Dust Control	$ 2,000	/ LS	$ 2,000
3	1	LS	Worker and Public Protection	$ 1,000	/ LS	$ 1,000
4	1	LS	Furnish and Install Pump Supports and Catwalks	$ 66,000	/ LS	$ 66,000
5	1	LS	Furnish and Install Reverse Flow Pumps and Discharges	$ 180,500	/ LS	$ 180,500
6	1	LS	Furnish and Install Electrical Supply and VFD Controls [1/]	$ 170,000	/ LS	$ 170,000
7	1	LS	Miscellaneous Facilities and Operations	$ 6,000	/ LS	$ 6,000
				Construction Cost Subtotal		$ 440,500
				Construction Contingency (10%)		$ 44,100
				Construction Total		$ 484,600

[1/] Assumes no upgrade to existing PG&E Service or SCADApak

NORTH IN-LIEU PROJECT						
GENERAL						
1	1	LS	Mobilization, Demobilization, Bonds, Insurance	$ 37,900	/ LS	$ 37,900
2	1	LS	Worker and Public Protection	$ 5,000	/ LS	$ 5,000
3	1	LS	Miscellaneous Facilities and Operations	$ 28,400	/ LS	$ 28,400
CONSTRUCT 48" RCP PIPELINE						
4	2,250	LF	F&I 48" CL 100 C361 RCP Pipeline	$ 200	/ LF	$ 450,000
5	2	EA	F&I 48" Pipeline Air Vents	$ 2,500	/ EA	$ 5,000
6	1	EA	F&I 48" C361 RCP Tee	$ 5,000	/ EA	$ 5,000
7	1	EA	F&I 48" Blind Flange	$ 500	/ EA	$ 500
8	1	EA	F&I 48" to 24" C361 RCP Flange	$ 3,500	/ EA	$ 3,500
CONSTRUCT 12" PVC PIPELINE						
9	6,350	LF	F&I 12" CL 100 PIP PVC Pipeline	$ 12	/ LF	$ 76,200
10	5	EA	F&I 12" Pipeline Air Vents	$ 2,500	/ EA	$ 12,500
11	3	EA	F&I 12" to 18" PIP PVC Reducer	$ 1,000	/ EA	$ 3,000
12	2	EA	F&I 12" to 24" PIP PVC Reducer	$ 1,000	/ EA	$ 2,000
CONSTRUCT 18" PVC PIPELINE						
13	2,650	LF	F&I 18" CL 100 PIP PVC Pipeline	$ 29	/ LF	$ 76,900
14	2	EA	F&I 18" Pipeline Air Vents	$ 2,500	/ EA	$ 5,000
15	1	EA	F&I 18" PIP PVC Tee	$ 1,000	/ EA	$ 1,000
16	5	EA	F&I 18" to 24" PIP PVC Reducer	$ 1,000	/ EA	$ 5,000
CONSTRUCT 24" PVC PIPELINE						
17	2,650	LF	F&I 24" CL 100 PIP PVC Pipeline	$ 50	/ LF	$ 132,500
18	2	EA	F&I 24" Pipeline Air Vents	$ 2,500	/ EA	$ 5,000
19	1	EA	F&I 24" PIP PVC Cross	$ 1,500	/ EA	$ 1,500
20	1	EA	F&I 24" PIP PVC Flange	$ 1,000	/ EA	$ 1,000
CONSTRUCT 48" TURNOUT PIPELINE						
21	1	LS	F&I 48" Canal Turnout	$ 70,000	/ LS	$ 70,000
22	1	LS	Connect 48" CMLC Steel Pipeline to Turnout	$ 5,000	/ LS	$ 5,000
RETROFIT EXISTING WELLS						
23	6	EA	Construct PVC Connections to Existing Wells	$ 3,100	/ EA	$ 18,600
24	6	EA	Retrofit Existing Wells PG&E Service to PRWPA Metering	$ 2,500	/ EA	$ 15,000
25	6	EA	F&I Flow Meters to each Discharge from Existing Wells	$ 8,200	/ EA	$ 49,200
ROAD CROSSINGS						
26	1	LS	Open Cut Trench and Resurface Buena Vista Rd.	$ 3,000	/ LS	$ 3,000
				Construction Cost Subtotal		$ 1,017,700
				Construction Contingency (20%)		$ 203,500
				Construction Total		$ 1,221,200

SYCAMORE IN-LIEU PROJECT

GENERAL								
1	1	LS	Mobilization, Demobilization, Bonds, Insurance	$	12,700	/ LS	$	12,700
2	1	LS	Worker and Public Protection	$	4,200	/ LS	$	4,200
3	1	LS	Miscellaneous Facilities and Operations	$	11,900	/ LS	$	11,900
CONSTRUCT 15" PVC PIPELINE								
4	3,600	LF	F&I 15" CL 100 PIP PVC Pipeline	$	12	/ LF	$	43,200
5	4	EA	F&I 15" Pipeline Air Vents	$	2,500	/ EA	$	10,000
6	2	EA	F&I 15" to 18" PIP PVC Reducer	$	1,000	/ EA	$	2,000
7	1	EA	F&I 15" PIP PVC 90 Deg Elbow	$	1,000	/ EA	$	1,000
8	1	LS	Construct 15" Steel Gooseneck Discharge	$	9,800	/ LS	$	9,800
CONSTRUCT 18" PVC PIPELINE								
9	4,200	LF	F&I 18" CL 100 PIP PVC Pipeline	$	29	/ LF	$	121,800
10	4	EA	F&I 18" Pipeline Air Vents	$	2,500	/ EA	$	10,000
11	1	EA	F&I 18" PIP PVC Tee	$	1,000	/ EA	$	1,000
CONSTRUCT 12" STEEL PIPE CROSSING MODIFICATION								
12	200	LF	F&I 12" Steel Discharge	$	100	/ LF	$	20,000
13	2	EA	F&I 12" Pipeline Air Vents	$	2,500	/ EA	$	5,000
14	2	EA	F&I 12" Steel Tee	$	3,000	/ EA	$	6,000
15	2	EA	F&I 12" Gate Valve	$	2,400	/ EA	$	4,800
16	1	EA	F&I 12" Isolation Valve	$	2,500	/ EA	$	2,500
17	4	EA	F&I 12" Steel 90 Deg Elbow	$	2,000	/ EA	$	8,000
CONSTRUCT 24" TURNOUT PIPELINE								
18	100	LF	Demo Existing 18" RCP Turnout Piping	$	8	/ LF	$	800
19	100	LF	F&I 24" RCP Turnout Piping	$	100	/ LF	$	10,000
20	1	LS	Connect 24" RCP Pipeline to Existing Turnout	$	5,100	/ LS	$	5,100
21	1	EA	F&I 24" RCP Pipeline Air Vent	$	600	/ EA	$	600
22	1	LS	Connection from Pipeline to Existing Turnout Booster Pump	$	5,100	/ LS	$	5,100
RETROFIT EXISTING WELLS								
23	3	EA	Construct PVC Connections to Existing Wells	$	3,100	/ EA	$	9,300
24	7	EA	Retrofit Existing Wells PG&E Service to PRWPA Metering	$	2,500	/ EA	$	17,500
25	7	EA	F&I Flow Meters to each Discharge from Existing Wells	$	8,200	/ EA	$	57,400
						Construction Cost Subtotal	$	379,700
						Construction Contingency (10%)	$	38,000
						Construction Total	$	417,700
						All 3 Projects Construction Total	**$**	**2,123,500**

Project Cost Estimate:

DWR Category (a): Direct Project Administration		
Tasks 1 - Administration	$	41,200
Tasks 2 - Labor Compliance	$	13,700
Tasks 3 - Reporting	$	27,400
Category (a) Total:	$	82,300
DWR Category (b): Land Purchase/Easement/Legal		
Task 4 - Land Owner Agreements	$	32,000
DWR Category (c): Planning/Design/Engineering/Environmental Documentation		
Task 5 - Power Planning	$	72,300
Task 6 - Final Design	$	195,000
Task 7 - Environmental Documentation	$	62,500
Task 8 - Permitting	$	18,000
Category (c) Total:	$	347,800
DWR Category (d) - Construction/Implementation Costs		
Task 9 - Construction Contracting	$	20,000
Task 10 - Construction (from construction estimate above)	$	2,123,500
Task 11 - Environmental Compliance/Mitigation/Enhancement	$	40,000
Task 12 - Construction Administration	$	179,000
Category (d) Total:	$	2,362,500
TOTAL PROJECT COST	**$**	**2,824,600**