CITY OF INDIO
INDIO WATER AUTHORITY

WATER RECLAMATION FACILITIES FOR REUSE AND GROUNDWATER RECHARGE – PHASE 1 ENVIRONMENTAL PROGRAM

TECHNICAL MEMORANDUM NO. 4
RECYCLED WATER TREATMENT ALTERNATIVES AND DELIVERY CORRIDOR OPTIONS

January 2010

7888 MISSION GROVE PKWY SO, # 100 • RIVERSIDE, CA 92508 • (951) 776-3955 • FAX (951) 776-4207

CITY OF INDIO / INDIO WATER AUTHORITY
WATER RECLAMATION FACILITIES FOR
REUSE AND GROUNDWATER RECHARGE – PHASE 1 ENVIRONMENTAL PROGRAM

RECYCLED WATER TREATMENT ALTERNATIVES AND
DELIVERY CORRIDOR OPTIONS

TECHNICAL MEMORANDUM
NO. 4

TABLE OF CONTENTS

Page No.

1.0 INTRODUCTION 4-1

2.0 TREATMENT ALTERNATIVES 4-1
- 2.1 Tertiary Filtration 4-1
- 2.2 Membrane Bioreactor 4-5
- 2.3 Advanced Treatment for Ground Water Recharge 4-5

3.0 SITE LAYOUT 4-8
- 3.1 Tertiary Filtration 4-10
- 3.2 Tertiary Microfiltration 4-10
- 3.3 Membrane Bioreactor 4-10
- 3.4 Advanced Treatment System (Posse Park) 4-10

4.0 CONCEPTUAL RECYCLED WATER DELIVERY CORRIDOR OPTIONS 4-14

5.0 REFERENCES 4-17

APPENDIX A - REGULATORY REQUIREMENTS FOR RECYCLED WATER

LIST OF FIGURES

Figure 1 Tertiary Filtration Process Flow Diagram 4-2
Figure 2 Tertiary Microfiltration Process Flow Diagram 4-4
Figure 3 Membrane Bioreactor Process Flow Diagram 4-6
Figure 4 Advanced Treatment System Process Flow Diagram 4-7
Figure 5 Existing Facility Site Layout 4-9
Figure 6 Preliminary Tertiary Filtration Site Layout 4-11
Figure 7 Preliminary Tertiary MF Site Layout 4-12
Figure 8 Preliminary MBR Site Layout 4-13
Figure 9 Preliminary MF/RO Site Layout at Posse Park 4-15
Figure 10 Potential Recycled Water Customers and Water Delivery Infrastructure 4-16

RECYCLED WATER TREATMENT ALTERNATIVES

1.0 INTRODUCTION

This technical memorandum (TM) is prepared for the Indio Water Authority (IWA) in partial fulfillment of the agreement between the IWA and Carollo Engineers; P.C. (Carollo) entitled "Water Reclamation Facilities for Reuse and Groundwater Recharge – Phase I Environmental Program." This TM describes the different treatment alternatives to produce recycled water, candidates for using recycled water, and potential corridors for delivering recycled water. This TM is intended to provide the essential information to compile the project description for a program environmental document that will be prepared and processed by the IWA for compliance with the California Environmental Quality Act (CEQA), and National Environmental Policy Act (NEPA).

2.0 TREATMENT ALTERNATIVES

Several treatment alternatives have been identified for the production of recycled water that meets California Title 22 requirements. Specifically, treatment alternatives to produce recycled water for irrigation and groundwater recharge were identified. For a detailed summary of California Title 22 requirements for irrigation and groundwater recharge, see Appendix A. The Title 22 treatment alternatives for irrigation include tertiary filtration (DynaSand®, Cloth Disk) and membrane bioreactors (MBR), while the groundwater recharge alternative will investigate microfiltration/reverse osmosis (MF/RO) combination. All alternatives will require disinfection as the final treatment step. The alternatives were developed based on conventional Title 22 treatment requirements and potential future treatment plant effluent requirements. The proposed alternatives are described in the following sections.

2.1 Tertiary Filtration

Tertiary filters are designed to remove total suspended solids (TSS) from secondary effluent by passing it through a filter media. There are several filter media options available including fine sand, dual media (anthracite/sand), and cloth. The filter options that will be evaluated for this project are continuous backwash, upflow, sand filters (DynaSand®) and cloth disk filters. Both of these filter technologies are approved for Title 22 treatment and are installed at numerous facilities producing Title 22 water.

Tertiary filtration is a proven lower cost option for the production of Title 22 irrigation water. If this option is selected, tertiary filters will be installed at the Valley Sanitary District (VSD) treatment plant. The facility could include a secondary effluent pump station, flocculation, tertiary filters, disinfection, irrigation water storage, and an irrigation water pump station. A process flow diagram (PFD) of the treatment train is shown on Figure 1. Because the tertiary filter only remove suspended solids, any requirement for nutrient removal need to be accomplished in the secondary treatment process.

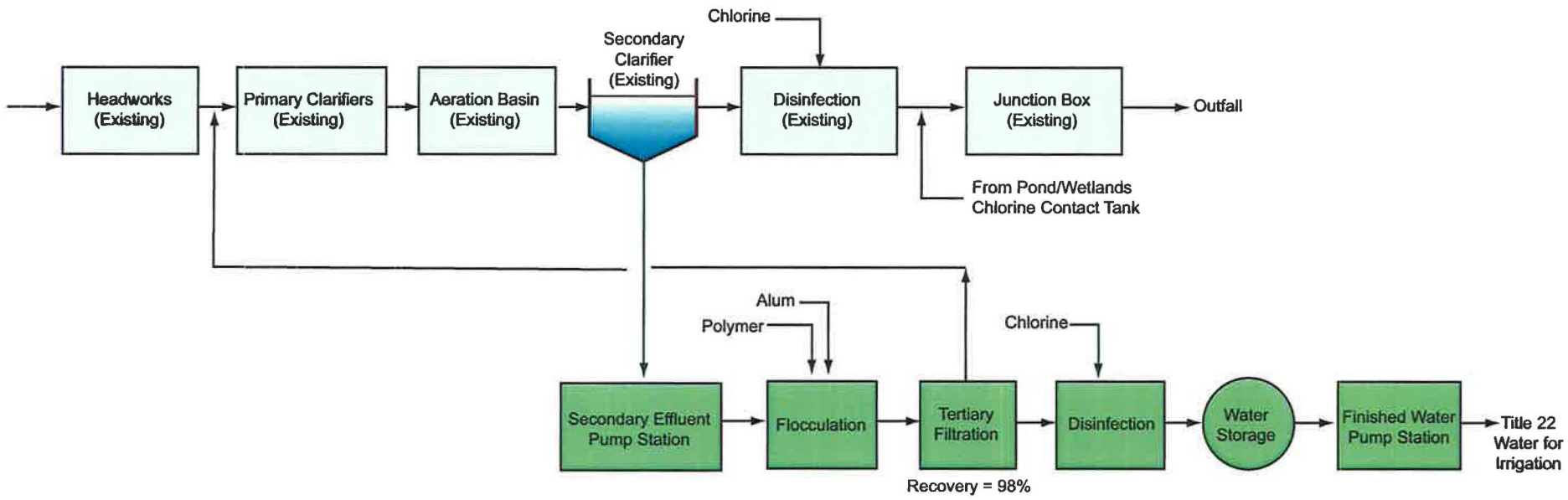

TERTIARY FILTRATION PFD

FIGURE 1

2.1.1 DynaSand® Filters

The DynaSand® filter is available either as standalone package units or in a modular concrete design. The continuous backwash filter operates with an upflow, counter-current flow pattern and provides initial contact of unfiltered water with the dirtiest sand in the filter. The dirty sand moves downward away from the water's flow path to the air scour tube. The water's upward flow path passes through progressively cleaner filter media until it exits from the surface of the cleanest media. A typical filter cell includes the components of four filter modules within a reinforced concrete filter chamber. The filter's deep media bed allows it to handle high levels of suspended solids.

2.1.2 Cloth Filters

Cloth media filters are also available as standalone package units or in a modular concrete design. They are low-head systems and are designed to backwash automatically based upon water differential while maintaining continuous filtration during backwash. The typical backwash volume represents approximately 2 to 3 percent of the feed flow with a recovery time of less than 3 minutes, compared to other typical filters, which can take up to 20 minutes. The disks can be provided in tanks with various numbers of disks depending on the design flow.

2.1.3 Tertiary Filtration Title 22 Effluent Requirements

The Title 22 effluent requirements are similar for both filter technologies. In accordance with Title 22, the filter effluent turbidity must average less than or equal to 2 NTU for any 24-hour period, must not exceed 5 NTU longer than 15 minutes, and must never exceed 10 NTU. In the event the effluent turbidity exceeds 5 NTU for more than 15 minutes, automatic chemical addition must be implemented, or else the filter feed pumps must be shut down. Alum and polymer can be added to the filter influent and mixed using inline mixing or flocculation basins.

2.1.4 Tertiary Microfiltration

MF membranes are an efficient technology for particle removal and pathogen control. These technologies yield finished water turbidities consistently below 0.1 NTU, independent of feed water quality. Membrane filtration is a pressure-driven process that provides a near absolute barrier to suspended solids and microorganisms. MF membranes have a pore size ranging from 0.1 to 0.5 microns.

The MF process would provide greater flexibility for future groundwater recharge. If this option is selected, existing Chlorine Contact Tank No. 1 (abandoned) could be converted into a membrane tank. The Title 22 facility would include MF, disinfection, water storage, and an effluent water pump station. A PFD of the treatment train is shown on Figure 2.

2.1.5 Tertiary Microfiltration Title 22 Effluent Requirements

Title 22 requirements state that membrane treated effluent must have a turbidity that does not exceed 0.2 NTU more than 5 percent of the time in a given 24-hour period, and cannot exceed 0.5 NTU at any time.

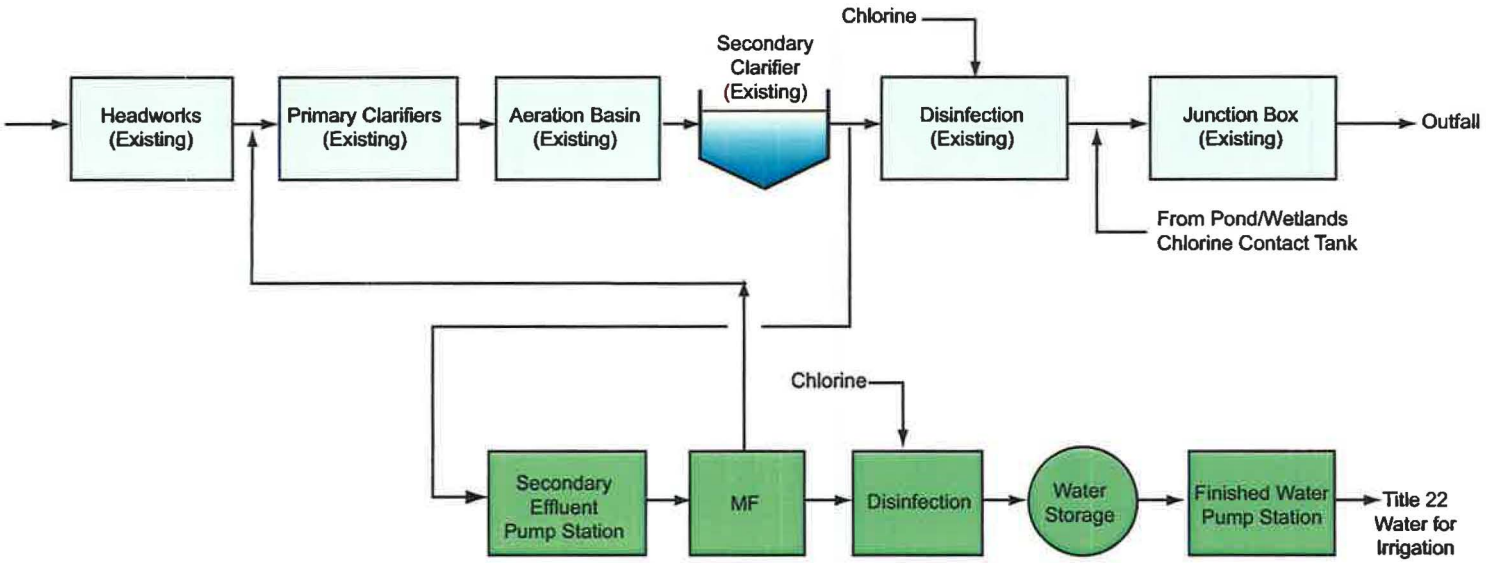

TERTIARY MICROFILTRATION PFD

FIGURE 2

2.2 Membrane Bioreactor

The MBR process is a biological process that uses MF or ultrafiltration (UF) membranes installed in membrane tanks to separate solids and produce a high-quality effluent. The MBR process is capable of achieving the nutrient removal requirements for effluent ammonia and nitrate to be compatible with future treatment requirements for groundwater recharge. Membranes used in MBR applications are typically polymeric (but may be ceramic) media with pore sizes in the range of 0.04 microns to 0.4 microns. The physical separation barrier provided by the membranes is the most effective and reliable treatment mechanism to meet recycled water requirements, and is less susceptible to process upsets. The MBR process is required by Title 22 to produce effluent with turbidity that does not exceed 0.2 NTU more than 5 percent of the time and not more than 0.5 NTU at any time.

The MBR process is a higher cost alternative, but has advantages over tertiary filtration. The MBR process will provide more flexibility for future groundwater recharge and increase plant capacity. If this option is selected, the existing Chlorine Contact Tank No. 1 (abandoned) could be converted into a membrane tank and fine screens could be installed upstream of the aeration basins. The Title 22 facility would include fine screens, MBR, disinfection, water storage, and an effluent water pump station. A PFD of the treatment train is shown on Figure 3.

2.2.1 MBR Title 22 Effluent Requirements

As previously mentioned, Title 22 requirements stipulate that membrane treated effluent must have a turbidity that does not exceed 0.2 NTU for more than 5 percent of the time in a given 24-hour period, and cannot exceed 0.5 NTU at any time.

2.3 Advanced Treatment for Ground Water Recharge

This section discusses the MF/RO membrane treatment process to provide demineralization for the production of recycled water for groundwater recharge. The MF process (this process could also be UF, MF has been used here for simplicity) is required as pretreatment for the RO, and the RO is responsible for demineralization and removal of dissolved organic compounds in the recycled water. The groundwater recharge treatment facility would also include an ultraviolet (UV) advanced oxidation process (AOP) using hydrogen peroxide to provide disinfection and oxidation of microconstituents. This process would be followed by a stabilization step to protect the distribution pipeline, finished water storage, and a finished water pump station. A PFD of this treatment train is shown on Figure 4.

2.3.1 Microfiltration

The MF process for advanced treatment would be similar to the tertiary MF previously described in this TM. As shown on Figure 2, the MF process requires a backwash that flows back to the headworks. As the satellite advanced treatment facility, this backwash flow would be discharged to the sewer to flow back to the treatment plant. MF can provide consistent pretreatment for RO systems and would be included in the design of a groundwater recharge treatment system if tertiary filters are chosen for Title 22 treatment.

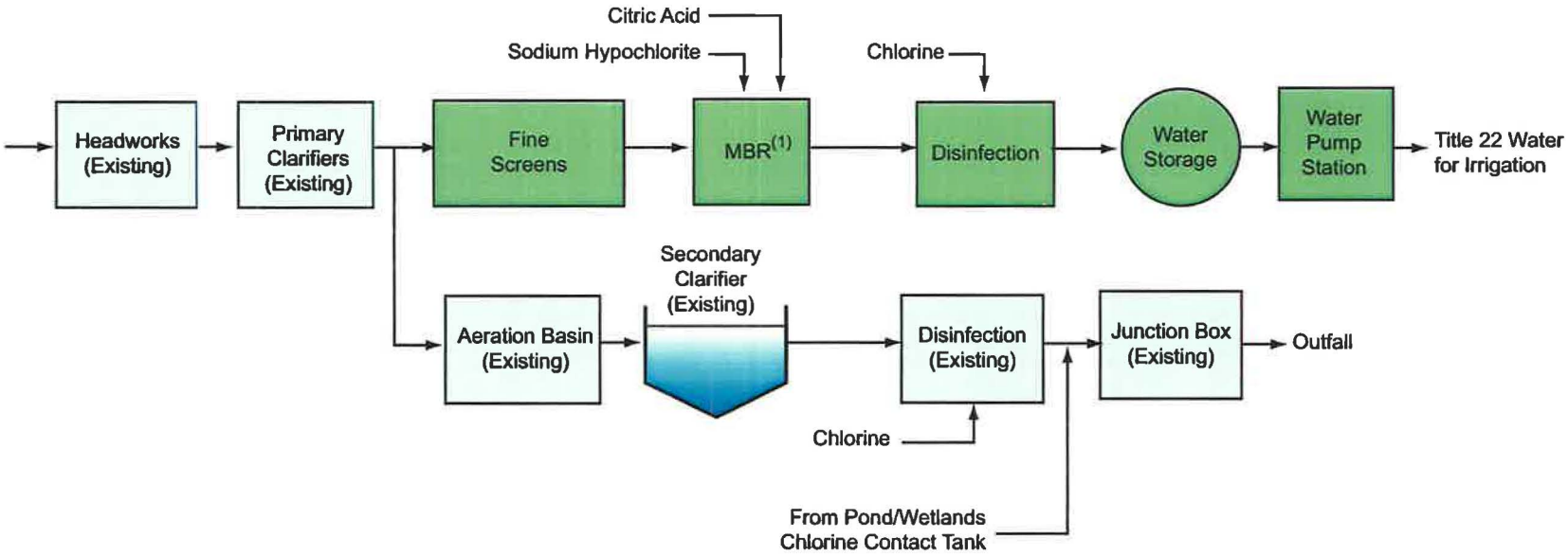

Notes:
(1) Modify existing aeration basins and retrofit abandoned chlorine contact tank 1.

MBR PFD

FIGURE 3

INDIO WATER AUTHORITY

carollo Engineers
Working Wonders With Water™

INDIO Water Authority

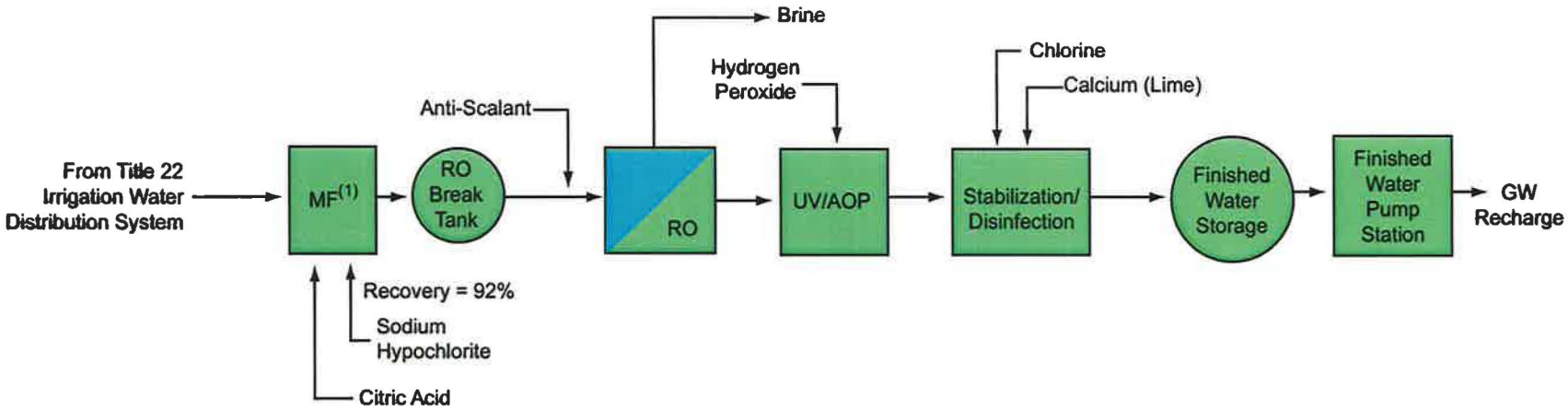

Notes:

(1) MF system is required if tertiary filtration is used for title 22 irrigation water.
(2) MF/RO system would be built near point of injection.

ADVANCED TREATMENT SYSTEM PFD(2)

FIGURE 4

INDIO WATER AUTHORITY

carollo
Engineers...Working Wonders With Water™

2.3.2 Reverse Osmosis

High-pressure membrane processes such as RO are typically used for the removal of dissolved constituents including both inorganic and organic compounds. RO is a process in which the mass-transfer of ions through membranes is diffusion controlled. The feed water is pressurized, forcing water through the membranes concentrating the dissolved solids that cannot travel through the membrane. Consequently, these processes can remove salts, hardness, synthetic organic compounds, disinfection-by-product precursors, etc. However, dissolved gases such as H_2S and carbon dioxide, and some pesticides pass through RO membranes.

RO is considered a "high-pressure" process because it operates from 75 to 1,200 psig, depending upon the total dissolved solids (TDS) concentration of the feed water. Typical recoveries for RO plants operating on domestic wastewater are around 85 percent depending on the type and concentrations of sparingly soluble salts (calcium sulfate, calcium carbonate, silica, etc.) in the feed water.

One of the issues with the RO process is the discharge of the concentrated brine stream. For this site there are a few options: The brine from the RO unit could be sent to a large system of evaporation ponds, the brine could be further treated to increase finished water production and decrease brine volume reducing the size of the evaporation ponds, or there may be potential for a regional brine management plan consisting of large evaporation ponds. (Note: As of 2011, a regional brine line seems to be the preferred option).

2.3.3 Ultraviolet Advanced Oxidation Process

UV disinfection is a physical process that uses no toxic chemicals and produces no known toxic residuals or byproducts. The disinfection mechanism of UV light involves damage or destruction of an organism's genetic material due to the transference of electromagnetic energy (i.e., wavelength of 254 nanometers, or 254-nm) from a UV lamp to the genetic material. The lethal effects of this energy result primarily from the organism's inability to replicate. When coupling this system with a small dose of hydrogen peroxide, an advanced oxidation system results, in which hydroxyl radicals are produced which can attack and destroy many microconstituents.

3.0 SITE LAYOUT

Conceptual site layouts have been developed for the three Title 22 irrigation water treatment facilities and the groundwater recharge treatment facility. The site layouts are preliminary and show the general footprints of each unit operation on the project site. The footprints were developed for each unit operation based on an assumed ultimate system capacity of 12 mgd. The three alternatives for Title 22 irrigation water treatment are shown on the VSD treatment facility and the groundwater recharge facility is shown near the potential injection points at Posse Park. An aerial photograph of the existing site and facilities is presented on Figure 5.

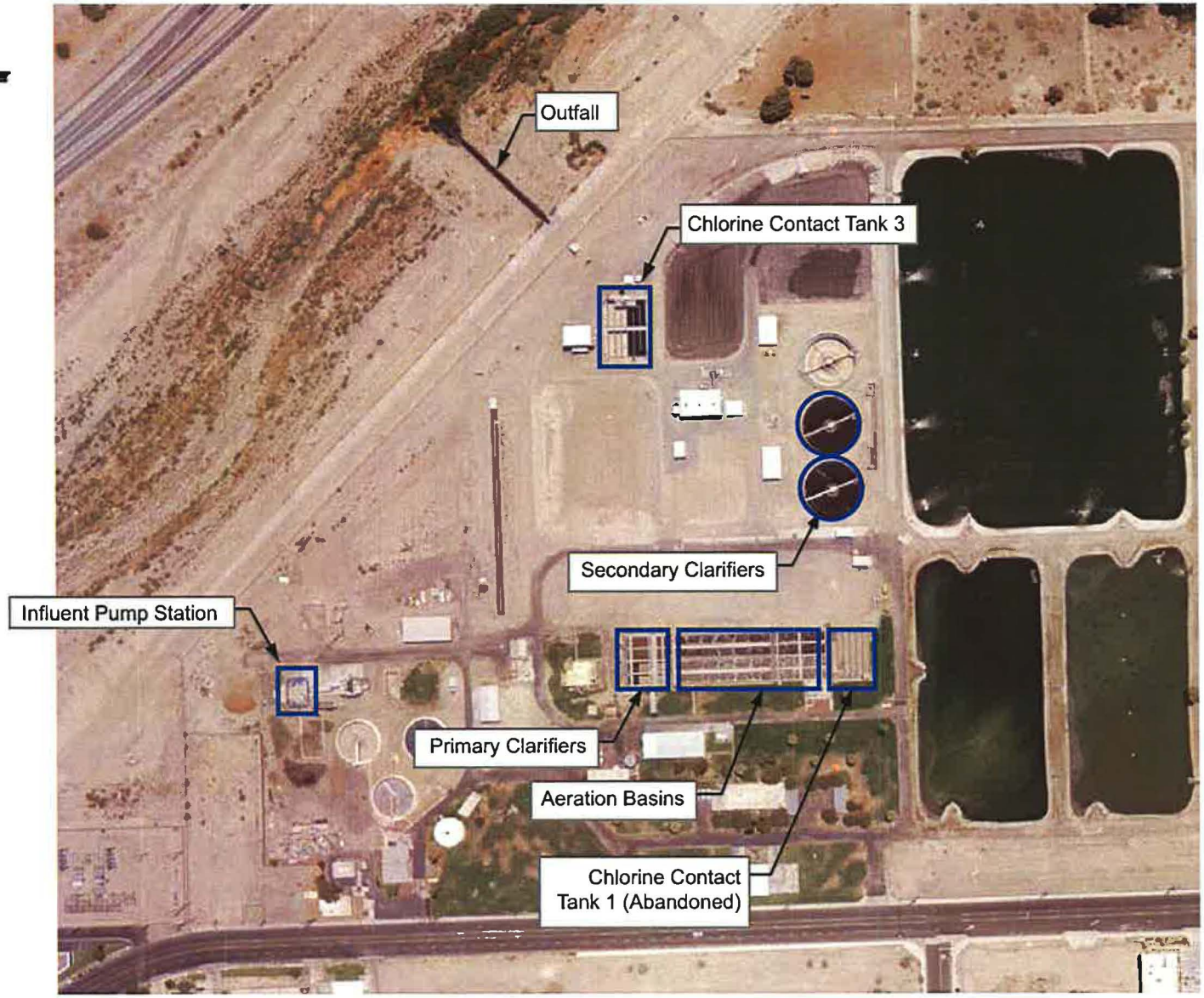

EXISTING FACILITY SITE LAYOUT

FIGURE 5

carollo
Engineers...Working Wonders With Water™

INDIO WATER AUTHORITY

INDIO Water Authority

3.1 Tertiary Filtration

The tertiary filtration system would require the construction of several unit operations as described above. A Secondary Effluent pump station would be constructed near the existing Chlorine Contact Tank No. 3 and would pump secondary effluent to the tertiary filtration system located in the northwest corner of the treatment facility. A conceptual site layout of the tertiary filtration system is presented on Figure 6.

Figure 6 shows that the tertiary filtration system will be easily accommodated in the northwest corner of the site. This area was chosen because it does not interfere with the facility's master plan expansion of the secondary facilities and is in close proximity to a 14-inch line which crosses the channel and highway.

3.2 Tertiary Microfiltration

The tertiary MF system would require less of a footprint than the tertiary filtration option. The required unit operations are described above. The existing (abandoned) Chlorine Contact Tank No. 1 structure could be modified to function as a membrane tank. The membrane permeate would be pumped from the membrane tank to the disinfection system and Effluent Pump Station located on the north side of the facility near the channel and highway crossing. A preliminary conceptual site layout of the tertiary MF system is shown on Figure 7.

3.3 Membrane Bioreactor

The MBR system would require less of a footprint than the tertiary filtration option. The required unit operations are described above. The existing aeration basin could be converted to an MBR by modifying the existing (abandoned) Chlorine Contact Tank No. 1 structure to function as a membrane tank. The membrane permeate would be pumped from the membrane tank to the disinfection system and Effluent Pump Station located on the north side of the facility near the channel and highway crossing. A conceptual site layout of the MBR system is shown on Figure 8.

3.4 Advanced Treatment System (Posse Park)

The MF/RO and UV/AOP advanced treatment system would be designed to treat water for groundwater recharge and would not be located at the VSD treatment facility, but could be located near the potential recharge location at Posse Park. The system would take water from the Title 22 irrigation water distribution system for further treatment and recharge. This would allow the City to produce two qualities of recycled water. One for general irrigation use, and the second, a much higher water quality, for ground water injection. Such an approach would be less costly than producing a single high quality that could be used for either irrigation or injection. The Advanced Treatment System would consist of the unit operations described earlier. The influent would first be treated using MF if the tertiary process installed at the VSD plant does not include a membrane treatment step. If an MBR options or a tertiary MF/UF alternative is used then MF would not be required. A break tank would be provided before the RO unit to ensure a stable influent flow. After RO treatment, the RO permeate would be pumped to the UV/AOP and stabilization processes. Then, the

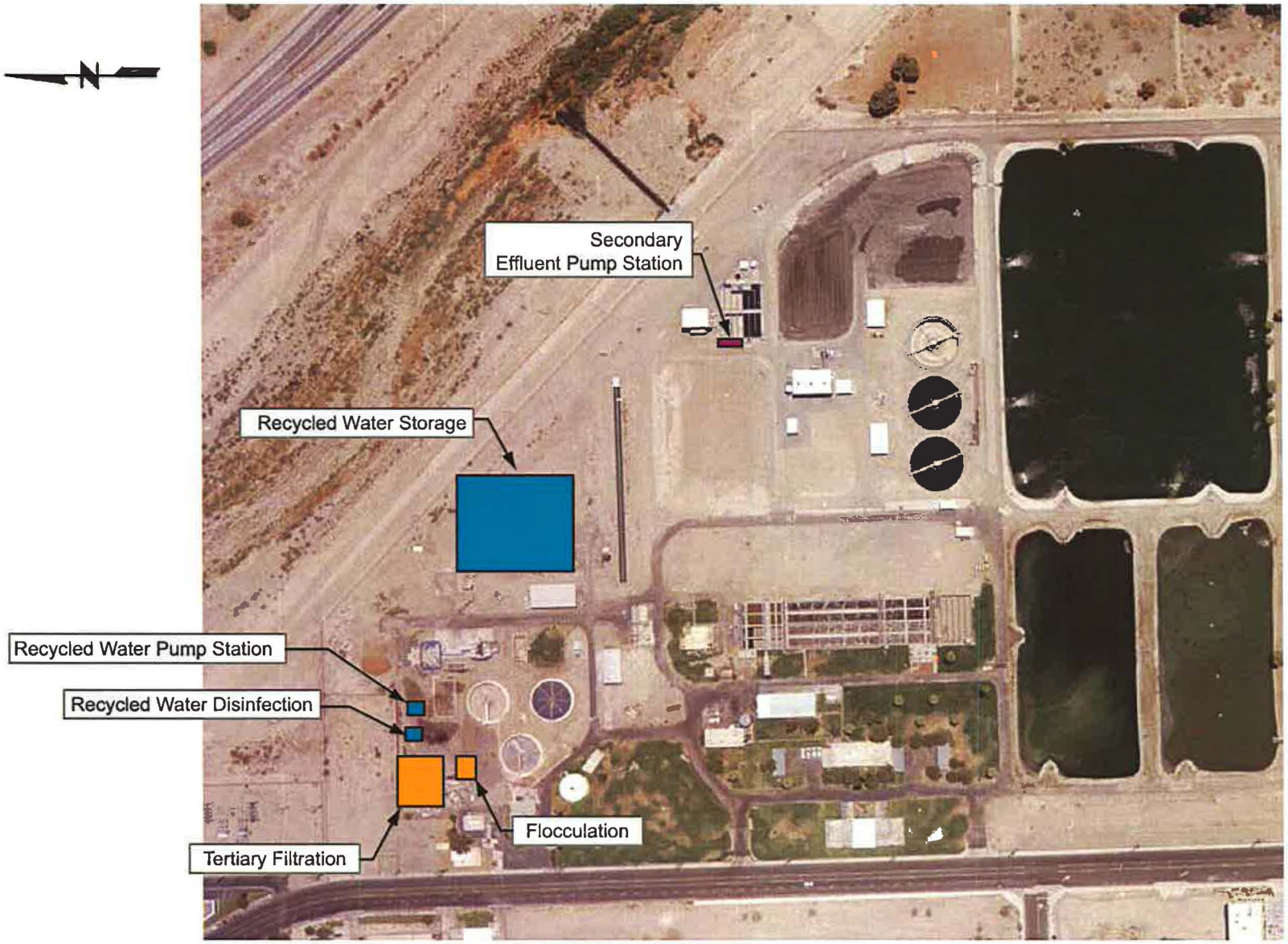

PRELIMINARY TERTIARY FILTRATION SITE LAYOUT

FIGURE 6

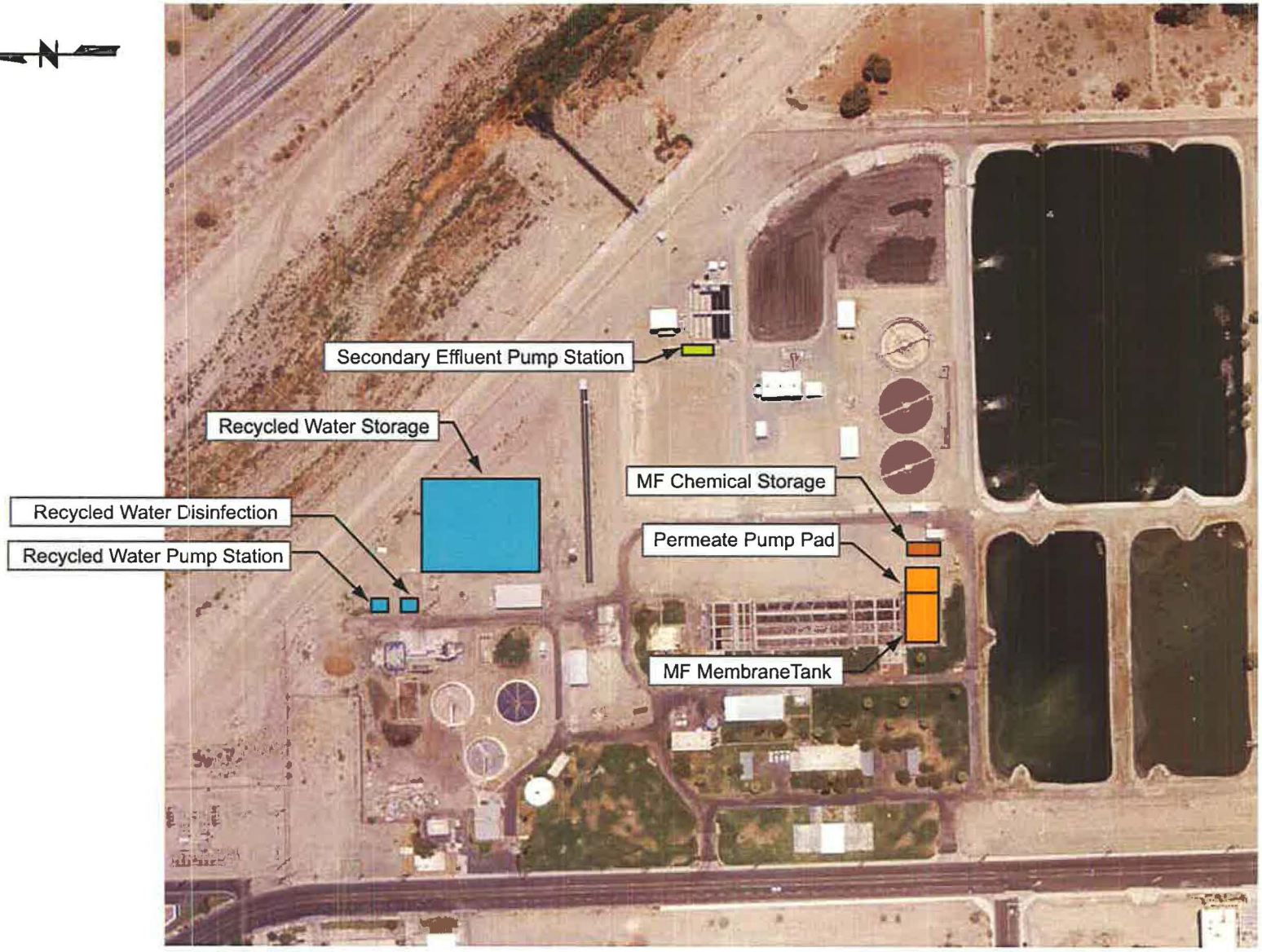

PRELIMINARY TERTIARY MF SITE LAYOUT

FIGURE 7

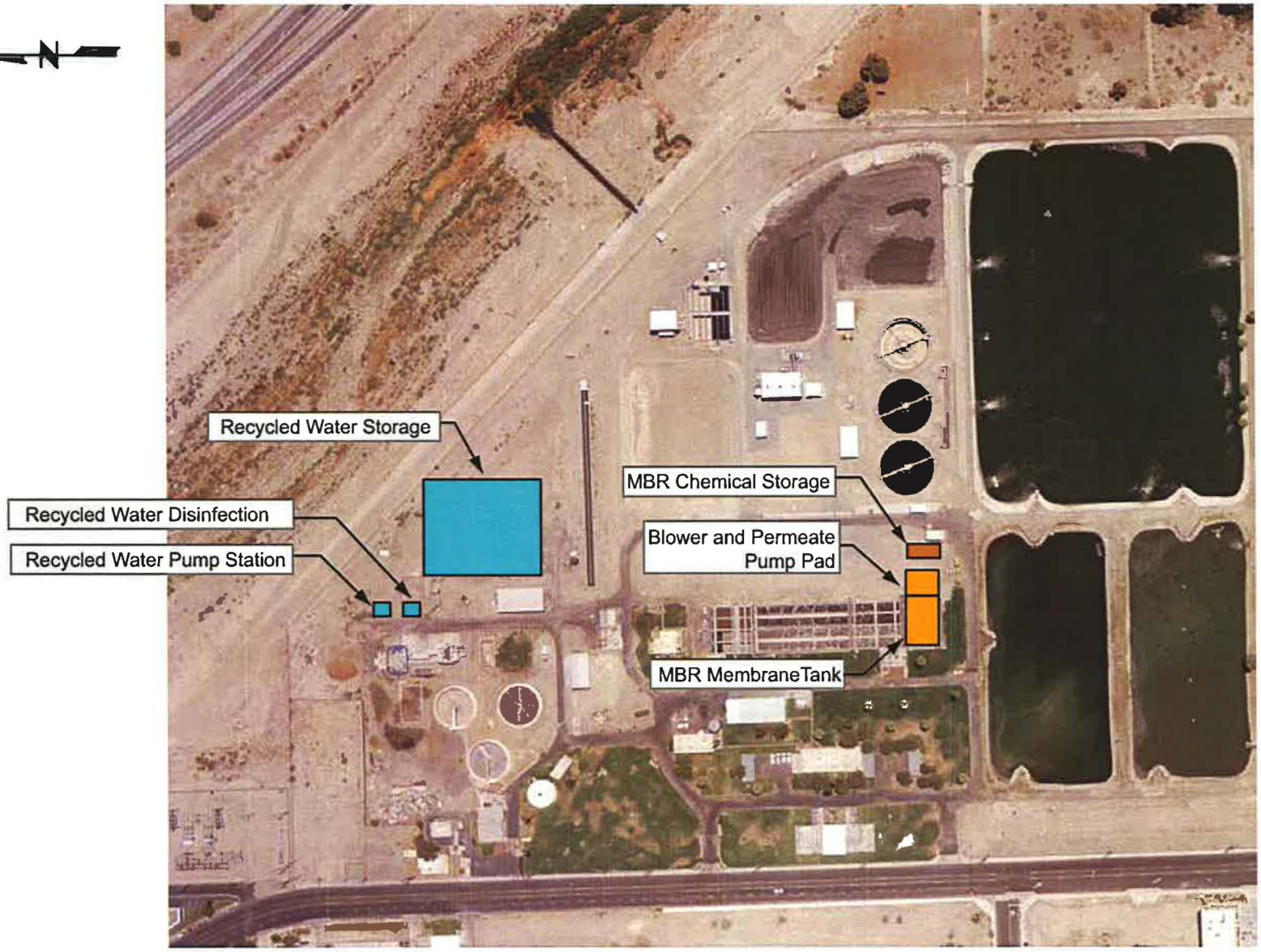

PRELIMINARY
MBR SITE LAYOUT

FIGURE 8

carollo
Engineers...Working Wonders With Water™

INDIO WATER AUTHORITY

INDIO Water Authority

Finished water would be pumped to storage or to recharge wells near Posse Park. A preliminary conceptual layout of the groundwater recharge treatment facility is shown on Figure 9, which indicates that there is adequate space at this site to accommodate the facility. Figure 9 includes footprint requirements for MF to provide a conservative site layout.

4.0 CONCEPTUAL RECYCLED WATER DELIVERY CORRIDOR OPTIONS

The recycled water delivery system is a key component of the overall recycled water program for the IWA. Figure 10 shows a map of the VSD and IWA boundaries, potential large recycled water customer locations, and a conceptual backbone pipeline route. To minimize infrastructure and pumping costs, the IWA may choose to deliver water at a pressure that is sufficient only to supply golf course ponds. The golf courses would then pump from the ponds to pressurize their irrigation systems. Recycled water pipelines would then be sized to deliver up to the maximum daily flow rate and not the peak flow rate from the irrigation pumps. Smaller recycled water users such as HOAs and City parks may need to provide booster pumping facilities to pressurize their irrigation systems in order to use recycled water. A phased program would add these smaller users as the recycled water transmission mains are extended to the larger users.

The first portion of the recycled water delivery system would be to construct a pipeline from the VSD WWTP north across the Coachella Valley Stormwater Channel and Interstate 10 to the Posse Park and Indio Municipal Golf Course. It may be easier to establish service to the City-owned facilities and establish policies with connections to other golf courses based on this experience. If the IWA chooses to construct injection wells in Posse Park, then the pipeline infrastructure would be in place for these wells. Other customers that would utilize this pipeline could then be persuaded to connect to the recycled water system. A 16-inch line would provide up to 4.9 mgd and would be sufficient to supply all of the prospective customers north and east of Interstate 10. It is assumed that well injection would occur in low irrigation demand periods.

Crossing of the channel and freeway is both expensive and risky. Several alternatives exist to accomplish this task. An extra 14-inch pipeline (Mainero, Smith and Associates, 2004) currently exists in the 54-inch casing that also contains three depressed sewer lines. However, on December 8, 2009, Rex Sharp pointed out that the existing capacity of the three sewers excluded any area north of Terra Lago. If VSD provides treatment, under contract to the City, for the Dillon Road Corridor from Avenue 44 to the north, then the extra 14-inch diameter pipeline would be needed or another depressed sewer line would need to be installed. A second alternative would be to install the proposed pipeline by horizontal direction drilling beneath the channel and conventional jack and bore construction under Interstate 10, but this would be an expensive option. A third alternative that was studied by Dudek and Associates, Inc. in July of 2004 was to convert an abandoned 15-inch diameter VCP depressed sewer beneath the channel to a pressure pipe utilizing Duraliner™ which results in an inside diameter of 13.5 inches. From the north side of the channel the recycled water would be transported across Interstate 10 by slip lining the abandoned 18-inch diameter VCP sewer with a 16-inch diameter fusible PVC pipe, which

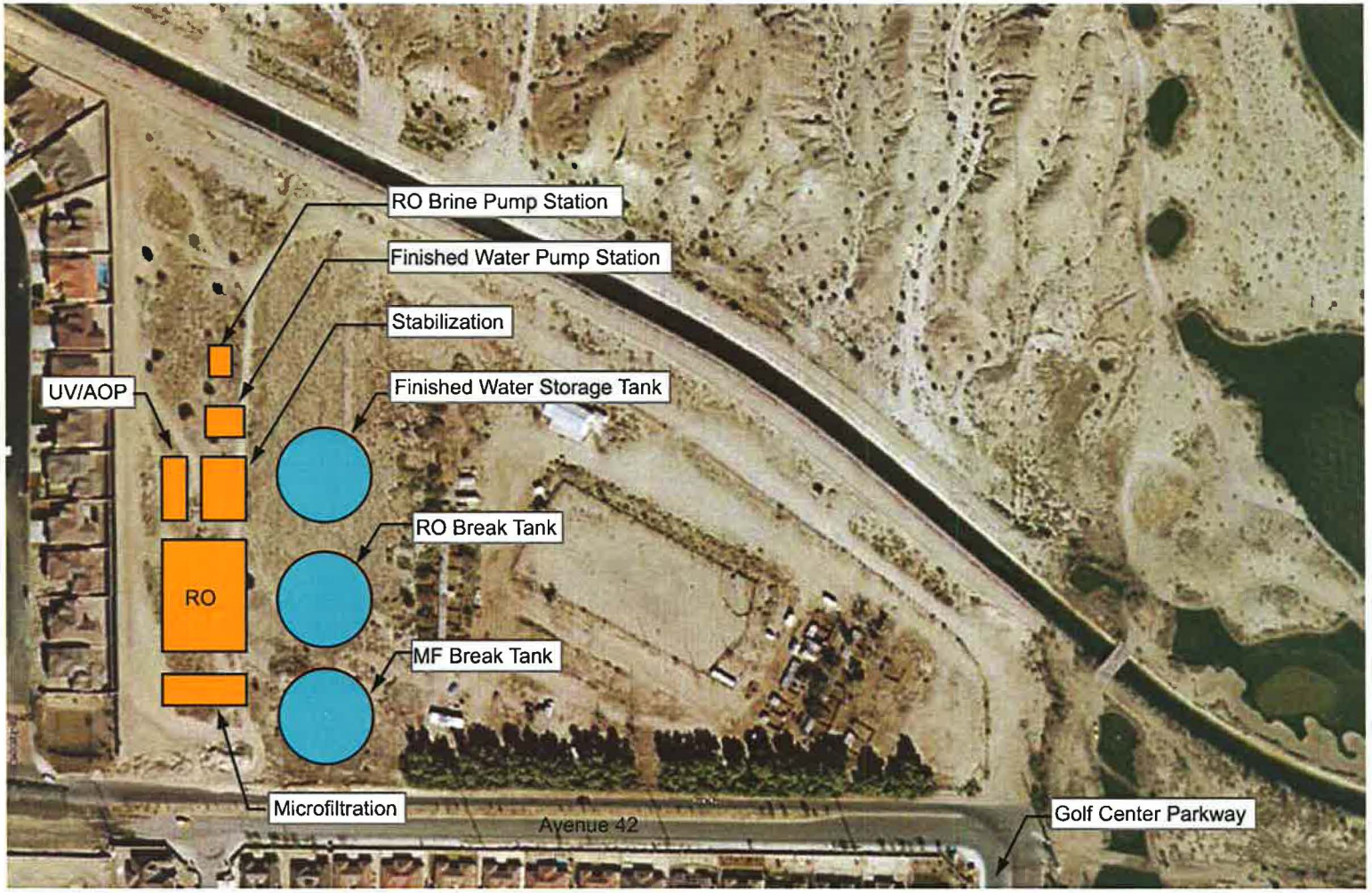

PRELIMINARY MF/RO SITE LAYOUT AT POSSE PARK

FIGURE 9

carollo
Engineers...Working Wonders With Water™

INDIO WATER AUTHORITY

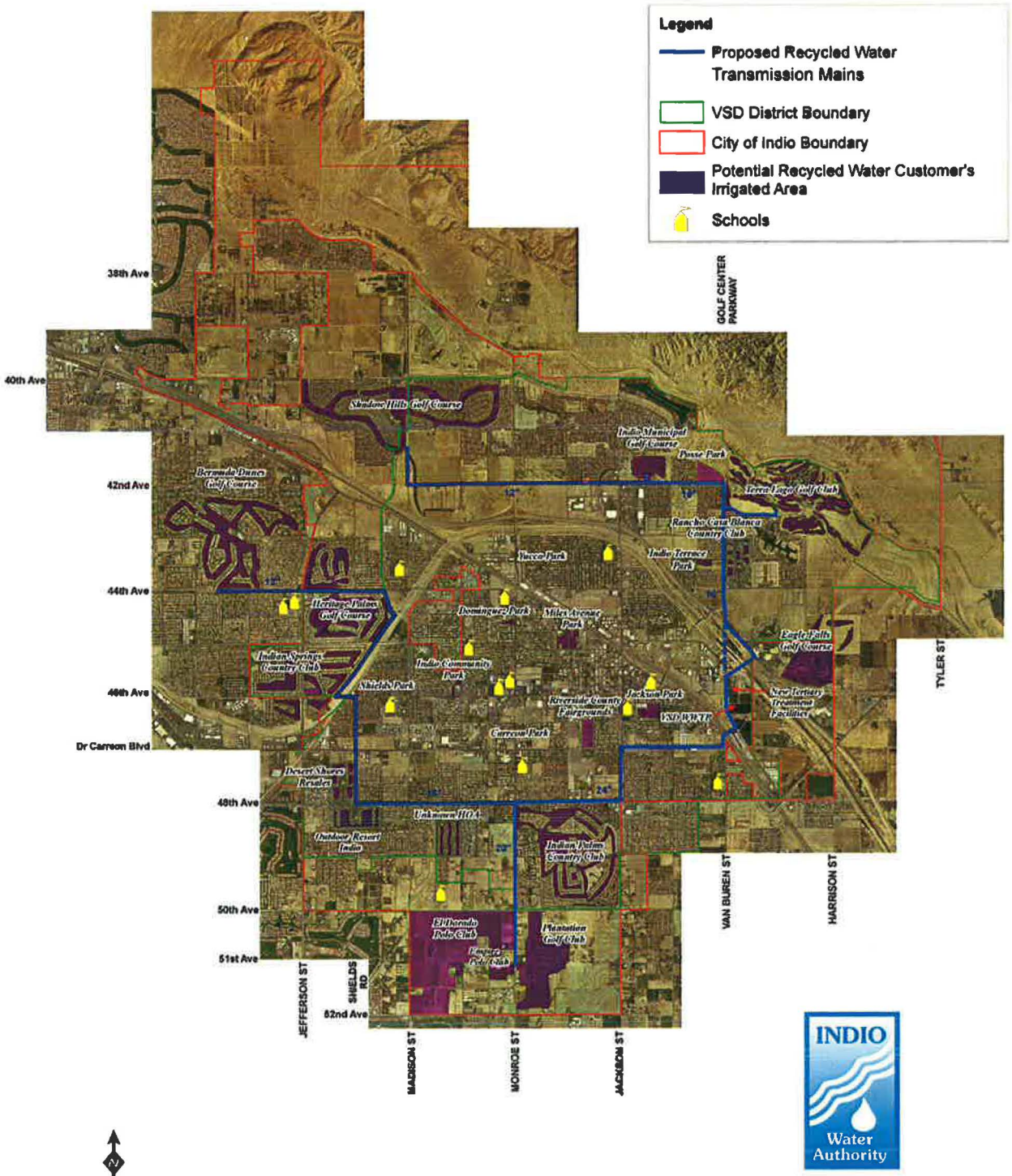

POTENTIAL RECYCLED WATER CUSTOMERS AND WATER DELIVERY INFRASTRUCTURE

Figure 10

December 2009

carollo

has an inside diameter of 15 inches. These three (3) alternatives will be studied further in the next phase of this project.

From Interstate 10 the transmission main would run north in Golf Center Parkway to 42nd Avenue then west to the Indio Municipal Golf Course. At this point the 16-inch diameter pipeline would reduce to 12 inches and ultimately continue west on 42nd Avenue to Madison then north to Shadow Hills Golf Course.

The second portion of the water delivery system would be to run a transmission main south and west of the VSD WWTP to serve the Indian Palms Country Club, Plantation Golf Club, and the Polo Clubs. This line may also be used to serve several of the City's parks. If the maximum daily flow rate would occur based on projected flows, then this pipe segment should be 24-inches in diameter.

The 24-inch diameter transmission main would be constructed in Van Buren Street to the south and then across the railroad and Indio Boulevard by jack and bore construction. Continue south on Van Buren Street to Dr. Carreon Boulevard and then west to Jackson Street then south on Jackson Street to 48th Avenue then west to Monroe Street. Continue south on Monroe Street with a 20-inch diameter pipeline to Indian Palms Country Club, Plantation Golf Club, Empire Polo Club, and El Dorado Polo Club. Laterals can also be provided to serve Jackson Park, Riverside County Fairgrounds and Carreon Park.

5.0 REFERENCES

Black & Veatch, 2008, IWA Water Resources Development Plan Phase 2 Final Report. Prepared for Indio Water Authority. August 2008.

Dudek, 2004, Recycled Water Feasibility Study – Phase 1. Prepared for Valley Sanitary District. July 14, 2004.

Lee & Ro, Inc., 2006, Valley Sanitary District Wastewater Treatment Plant Master Plan. Prepared for Valley Sanitary District. October 2006.

Mainero, Smith and Associates, 2004, Valley Sanitary Sewer District Shadow Hills Service Area Sewer Improvement Plans – Phase 1 Construction. Prepared for Valley Sanitary District. July 2004.

REGULATORY REQUIREMENTS FOR RECYCLED WATER

State Water Resources Control Board

The SWRCB establishes general policies governing the permitting of recycled water projects based on its role of protecting water quality and sustaining water supplies. The State Board reviews the permitting practices of the RWQCB and is also responsible for developing a general permit for irrigation uses of recycled water.

California Department of Public Health

The CDPH is responsible for protection of public health and drinking water supplies. It is also responsible for developing uniform water recycling criteria appropriate to particular uses of water. The latest version of the Regulations Related to Recycled Water is dated January 1, 2009. The latest update of the Draft Groundwater Recharge Reuse Regulations is dated August 5, 2008. The Regional Boards rely on CDPH to establish permit conditions for recycled water projects that will protect human health.

Regional Water Quality Control Boards

The RWQCBs are responsible for protecting the surface and groundwater resources of the State. They are also responsible for issuing permits that implement CDPH recommendations for each recycled water project.

Recycled Water for Irrigation

Chapter 3 of Division 4 of Title 22 of the California Code of Regulations defines the Water Recycling Criteria and uses and water quality requirements for recycled water. These criteria are commonly referred to as "Title 22".

In terms of required water quality, recycled water used for irrigation of:

1. Food crops, including all edible root crops, where the recycled water comes into contact with the edible portion of the crop,
2. Parks and playgrounds,
3. School yards,
4. Residential landscaping, and
5. Unrestricted access golf courses,

shall be "disinfected tertiary recycled water". Such water is defined as a filtered and subsequently disinfected wastewater that meets the following criteria for disinfection:

1. Includes a chlorine disinfection process following filtration that provides a CT value of not less than 450 mg-min/L at all times, with a modal contact time of at least 90-min based on peak dry weather design flow; or

2. Includes a disinfection process that, when combined with the filtration process, has been demonstrated to inactivate and/or remove 99.999 percent (5-log reduction) of the plaque forming units of F-specific bacteriophage MS2, or polio virus in the wastewater. A virus that is at least as resistant to disinfection as polio virus may be used for purposes of demonstration.

In addition, the median concentration of total coliform bacteria measured in the disinfected effluent must not exceed an MPN of 2.2 per 100 mL utilizing the bacteriological results of the last seven days for which analyses have been completed. Also, the number of total coliform bacteria must not exceed an MPN of 23 per 100 mL in more than one sample in any 30-day period. No sample shall exceed an MPN of 240 total coliform bacteria per 100 mL.

For the recycled water to be considered as filtered, it must be an oxidized wastewater that is either filtered through a membrane or other filter media, and in either case meets the criteria below:

1. For non-membrane filters, the recycled water has been coagulated and passed through natural undisturbed soils or a bed of filter media pursuant to the following:
   a. At a rate that does not exceed 5 gpm/ft^2 of surface area in mono, dual or mixed media gravity, upflow or pressure systems, or does not exceed 2 gpm/ft^2 of surface area in a traveling bridge automatic backwash filter; and
   b. So that the turbidity of the filtered wastewater does not exceed any of the following:
      1) An average of 2 NTU within a 24-hour period
      2) 5 NTU more than 5-percent of the time within a 24-hour period, and
      3) 10 NTU at any time.
      (Note that several filtration systems - other than media filters - have received "Title 22 approval" for which specific filtration rates are defined in order for the systems to meet the required turbidity limits shown above.)

2. For membrane filters, the recycled water has passed through a microfiltration, ultrafiltration, nanofiltration, or reverse osmosis membrane so that the turbidity of the filtered wastewater does not exceed any of the following:
   a. 0.2 NTU more than 5-percent of the time within a 24-hour period, and
   b. 0.5 NTU at any time.

Recycled Water For Groundwater Recharge

The regulations for using recycled water for groundwater recharge are significantly different to those for using recycled water for irrigation. Since the groundwater basins are aquifers used for potable purposes, the regulations are designed to protect the beneficial uses of each specific aquifer. Prior to making its recommendations to the RWQCB for the initial permit to operate a Groundwater Recharge Reuse Project (GRRP) the CDPH will hold a Pubic Hearing.

Recharging an aquifer with recycled water that will later be withdrawn and used for potable purposes is called Indirect Potable Reuse (IPR). In this way, the aquifer presents a natural barrier and also acts as a large storage area so that changes in water quality are more gradual. There are two ways in which recycled water can be used to recharge a groundwater basin, either by spreading the recycled water in a recharge basin and allowing natural infiltration to take place, or by injecting the recycled water directly into the underground basin. Minimum treatment requirements for spreading and injection are different and are discussed later.

Because recycled water originates from wastewater, the regulations are focused on controlling several key water quality parameters. Each is discussed briefly below:

1. **Control of Pathogenic Organisms**
   In order to meet the requirements for control of pathogenic organisms:

   a. The recycled water must meet the requirements of disinfected tertiary recycled water (defined above) – 450 CT, or 5-log virus reduction; and the total coliform limits.

   b. The aquifer must allow for a minimum of 6-months retention time of the water underground before it is extracted as a drinking water supply from the closest well.

   c. The GRRP must demonstrate within 3-months of commencing operation that the minimum retention time to the closest drinking water well has been met. This must be done by using a tracer study. Until the tracer study is applied, other minimum detention periods apply (calculated by applying a safety factor to the minimum 6-month period, resulting in detention periods varying between 9 and 24-months) depending on the method initially used to establish the aquifer detention period:

      1) Tracer study using an added chemical tracer (6-months)

      2) Tracer study using intrinsic tracer, such as TDS (9-months)

      3) Calibrated 3-D numerical model (12-months)

      4) Developed analytical method to determine distance (24-months)

      Monitoring wells need to be established, per CDPH requirements, in order to establish tracer movement.

2. **Control of Nitrogen Compounds**
   There are three methods for controlling nitrogen:

   a. Method 1 sets a low average concentration of total nitrogen (5 mg/L) and sampling twice weekly, with the rationale that if the recycled water is applied at this concentration then there is very little chance of the drinking water MCL for NO_2 or NO_3 ever being exceeded.

   b. Method 2 sets a maximum total nitrogen limit of 10 mg/L with more intensive sampling, with the rationale that the low limit of total nitrogen will result in a low risk of exceeding a drinking water MCL.

   c. Method 3 relies on compliance monitoring and is only for projects that have been in operation for more than 20-years. Monitoring points are set up between the recharge area and the down gradient domestic wells with relatively frequent sampling. Method 3 relies on the demonstration over a long period of time that nitrogen contamination in the drinking water wells has not been a problem, and that the NO_2 and NO_3 drinking water MCLs have been met.

3. **Control of Total Organic Carbon (TOC)**
   Due to the fact that recycled water contains organic material that originated from wastewater, CDPH's approach is to limit the amount of recycled water TOC that enters a groundwater basin. This is done by setting a Recycled Water Contribution (RWC) value for each GRRP. The RWC is the amount of recycled water applied at the GRRP divided by the total amount of water recharged into the basin (recycled water plus diluent water). Diluent water is defined as water that does not contain organic material of wastewater origin. Examples of diluent water include raw surface water, groundwater, and storm water.

   For example, if 1,000 AF of recycled water is combined with 4,000 AF of diluent water, the RWC would be 1,000/5,000 = 0.20 or 20%. The RWC is calculated on a 60-month average.

   The maximum TOC concentration permissible in the recycled water used for a GRRP is calculated using the following equation:

$$TOC_{max} = \frac{0.5}{RWC_{proposed}} \text{ mg/L}$$

   Thus, for a GRRP with a proposed RWC of 20%, the TOC_{max} concentration for the recycled water would be 2.5 mg/L For an RWC of 50%, the TOC_{max} would be 1.0 mg/L. The TOC concentration limit for the GRRP is calculated on a 20-week average basis. Monitoring requirements have been established for TOC.

   For each GRRP, CDPH will establish an <u>initial</u> RWC to be used for the project. This value will be based on review of the Engineer's Report and information obtained during the public hearing, but will not exceed the following limits:
   - 20% for surface spreading projects
   - 50% for groundwater injection
   - 50% for surface spreading projects that include RO

For projects that require additional treatment to meet the desired RWC, then advanced treatment with RO followed by an advanced oxidation process (AOP) are to be provided. The AOP process (UV/H_2O_2, Ozone/H_2O_2) must provide:

- 1.2 log NDMA reduction, and
- 0.5 log 1,4 Dioxane reduction

4. **Control of Emerging Contaminants**
   |Standards for these compounds do not yet exist and it is anticipated that it will be some time before such standards are established. Each GRRP is to propose a monitoring program for emerging contaminants. These include endocrine disrupting compounds (EDCs) and pharmaceuticals and personal care products (PPCPs). Work is being done in this area to identify surrogates that can be used to monitor the most critical compounds in the vast array of existing chemicals that fall into this category.

5. **Source Control**
   A source control program needs to be in place to regulate contaminants entering the sewer system.

Salt/Nutrient Management Plans

The SWRCB's Recycled Water Policy includes a requirement that Salt and Nutrient Management Plans be established for every groundwater basin/sub-basin in California. In some areas of the state, basin plans already exist that stipulate both nutrient and salt limits. If the planned GRRP produces a recycled water that meets the requirements of the existing plan, then additional work may not be needed. However, if no plan exists, then one needs to be developed, and if the proposed project exceeds the limits of an existing plan then modifications to the plan may be needed; both of which may include significant effort. Where new plans need to be developed, these are to be complete within five year of the adoption of the Recycled Water Policy, which is by February 3, 2014.

The Salt and Nutrient Management Plans shall also include provisions for annual monitoring of emerging contaminants / constituents of emerging concern.