60th Street West Wellhead Treatment Project

Supporting Documents

Test Data Sheet

BW&PC Aquifer Test

May 19 – 20, 2014

TEST DATA SHEET

DATE _____ JOB # 14.605

CUSTOMER L.A. COUNTY (PALMDALE PRISON) WELL # 3

MOTOR MAKE US HP 125 RPM 1781

ID# G51138 / U10U1990114R-1

PUMP MAKE INGERSOLL-[redacted]ND (10") 14KK

COLUMN

SUCTION COLUMN

SUCTION STARAINER

HEAD 10" I.R.

	UNIT	1	2	3	4	5
	RPM	1800				
VOLTA AB	VOLTS	460.0				
VOLTS BC	VOLTS	458.2				
VOLTS CA	VOLTS	460.1				
AVE VOLTS	AMPS	459.4				
AMPS A	AMPS	145.7				
AMPS B	AMPS	144.7				
AMPS C	AMPS	145.5				
AVEERAGE AMPS	AMPS	145.3				
KW1	KW	33.4				
KW2	KW	33.0				
KW3	KW	33.3				
TOTAL KW	KW	99.7				
PF1		0.858				
PF2		0.864				
PF3		0.856				
AVE PF		0.859.3				
SWL	FEET	145				
PWL	FEET	186				
DISCHARGE PRESSURE	PSI	2				
HEAD ABOVE GROUND	FEET					
FRICTION LOSS	FEET					
DICH TEE LOSS	FEET					
VELOCITY LOSS	FEET					
TOTAL HEAD	FEET					
FLOW1	GPM					
FLOW2	GPM					
FLOW3	GPM					
AVERAGE FLOW1	GPM	2,100				
DISCH PIPE DIA	INCH	10"				
DISCH PIPE AREA	SQ INCH					
VELOCITY1	FT/SEC					
VELOCITY 2	FT/SEC					
VELOCITY 3	FT/SEC					
AVERAGE VELOCITY	FT/SEC					
FLOW 2	GPM					
AVERAGE OF FLOW I & 2	GPM					

ADDITIONAL PUMP INFO:
S/N. 91076596 · 3 STGS. · IMP. H-11.12 · 1450 GPM @ 1770 RPM

BW&PC AQUIFER TEST

JOB# 14.605
CUSTOMER LA. COUNTY
DATE
WELL # 2A
TIME 0800 - 1500

SWL 146.6
AIRLINE NO
GPM 1300
RPM 1800
DIS PSI 20

TIME OF DAY	ELAPSED TIME(MIN)	DISCHARGE PSI	GPM	PUMPING LEVEL	DRAWN DOWN	STATIC LEVEL	SPECIFIC CAPACITY	RPM	SAND PPM	REMARKS for COLOR
0800						146.6		1800	0	
	0:01	20	1300	181	34.4					
	0:02									
	0:03									
	0:04									
	0:05									
	0:07									
	0:09									
	0:11									
	0:15									
	0:20									
	0:25									
	0:30									
	0:35								0.01	
	0:40									
	0:50									
0900	1:00									
	1:10									
	1:20									
	1:30									
	1:40									
1000	2:00									
1030	2:30									
1100	3:00									
1130	3:30									
1200	4:00									
1230	4:30									
1300	5:00									
1400	6:00									
1500	7:00									
	8:00									
	9:00									
	10:00									
	11:00									

BW&PC AQUIFER TEST

JOB# 14,605
CUSTOMER LA. COUNTY
DATE
WELL # 3
TIME 0800 - 1500

SWL 145
AIRLINE NO
GPM 2,100
RPM 1800
DIS PSI 2

TIME OF DAY	ELAPSED TIME(MIN)	DISCHARGE PSI	GPM	PUMPING LEVEL	DRAWN DOWN	STATIC LEVEL	SPECIFIC CAPACITY	RPM	SAND PPM	REMARKS for COLOR
0800						145		1800	0	
	0:01	2	2,100	186	41					
	0:02									
	0:03									
	0:04									
	0:05									
	0:07									
	0:09									
	0:11									
	0:15									
	0:20									
	0:25									
	0:30								0.01	
	0:35									
	0:40									
	0:50									
0900	1:00									
	1:10									
	1:20									
	1:30									
	1:40								0.02	
1000	2:00									
1030	2:30									
1100	3:00									
1130	3:30									
1200	4:00									
1230	4:30									
1300	5:00									
1400	6:00									
1500	7:00									
	8:00									
	9:00									
	10:00									
	11:00									

TEST DATA SHEET

DATE _____ JOB # 14.605

CUSTOMER L.A. COUNTY (PALMDALE PRISON) WELL # 2A

MOTOR MAKE US HP 125 RPM 1781

ID# G51138 / U10U18403 10R-1

PUMP MAKE INGERSOLL-RAND (10") 14KK

COLUMN

SUCTION COLUMN SUCTION STARAINER

HEAD 10" IR.

	UNIT	1	2	3	4	5
	RPM	1800				
VOLTA AB	VOLTS	463				
VOLTS BC	VOLTS	462				
VOLTS CA	VOLTS	465				
AVE VOLTS	AMPS	463.3				
AMPS A	AMPS	135.3				
AMPS B	AMPS	136.5				
AMPS C	AMPS	137.4				
AVEERAGE AMPS	AMPS	136.4				
KW1	KW	31.7				
KW2	KW	31.2				
KW3	KW	31.1				
TOTAL KW	KW	94				
PF1		0.846				
PF2		0.857				
PF3		0.853				
AVE PF		0.852				
SWL	FEET	146.6				
PWL	FEET	181				
DISCHARGE PRESSURE	PSI	20				
HEAD ABOVE GROUND	FEET					
FRICTION LOSS	FEET					
DICH TEE LOSS	FEET					
VELOCITY LOSS	FEET					
TOTAL HEAD	FEET					
FLOW1	GPM					
FLOW2	GPM					
FLOW3	GPM					
AVERAGE FLOW1	GPM	1300				
DISCH PIPE DIA	INCH	10"				
DISCH PIPE AREA	SQ INCH					
VELOCITY1	FT/SEC					
VELOCITY 2	FT/SEC					
VELOCITY 3	FT/SEC					
AVERAGE VELOCITY	FT/SEC					
FLOW 2	GPM					
AVERAGE OF FLOW I & 2	GPM					

ADDITIONAL PUMP INFO:
S/N. 91066551 · 3 STGS. · IMP. H-11.12 · 1450 GPM @ 1770 RPM

Analysis of the Energy Intensity of Water Supplies for West Basin Municipal Water District

March, 2007

Robert C. Wilkinson, Ph.D.

Note to Readers

This report for West Basin Municipal Water District is an update and revision of an analysis and report by Robert Wilkinson, Fawzi Karajeh, and Julie Mottin (Hannah) conducted in April 2005. The earlier report, *Water Sources "Powering" Southern California: Imported Water, Recycled Water, Ground Water, and Desalinated Water*, was undertaken with support from the California Department of Water Resources, and it examined the energy intensity of water supply sources for both West Basin and Central Basin Municipal Water Districts. This analysis focuses exclusively on West Basin, and it includes new data for ocean desalination based on new engineering developments that have occurred over the past year and a half.

Principal Investigator: Robert C. Wilkinson, Ph.D.

Dr. Wilkinson is Director of the Water Policy Program at the Donald Bren School of Environmental Science and Management, and Lecturer in the Environmental Studies Program, at the University of California, Santa Barbara. His teaching, research, and consulting focuses on water policy, climate change, and environmental policy issues. Dr. Wilkinson advises private sector entities and government agencies in the U.S. and internationally. He currently served on the public advisory committee for California's 2005 State Water Plan, and he represented the University of California on the Governor's Task Force on Desalination.
Contact: wilkinson@es.ucsb.edu

West Basin Municipal Water District

Contact: Richard Nagel, General Manager
West Basin Municipal Water District
17140 South Avalon Boulevard, Suite 210
Carson, CA 90746
(310) 217 2411 phone, (310) 217-2414 fax
richn@westbasin.org

West Basin Municipal Water District www.westbasin.org

Overview

Southern California relies on imported and local water supplies for both potable and non-potable uses. Imported water travels great distances and over significant elevation gains through both the California State Water Project (SWP) and Colorado River Aqueduct (CRA) before arriving in Southern California, consuming a large amount of energy in the process. Local sources of water often require less energy to provide a sustainable supply of water. Three water source alternatives which are found or produced locally and could reduce the amount of imported water are desalinated ocean water, groundwater, and recycled water. Groundwater and recycled water are significantly less energy intensive than imports, while ocean desalination is getting close to the energy intensity of imports.

Energy requirements vary considerably between these four water sources. All water sources require pumping, treatment, and distribution. Differences in energy requirements arise from the varying processes needed to produce water to meet appropriate standards. This study examines the energy needed to complete each process for the waters supplied by West Basin Municipal Water District (West Basin).

Specific elements of energy inputs examined in this study for each water source are as follows:

- Energy required to **import water** includes three processes: pumping California SWP and CRA supplies to water providers; treating water to applicable standards; and distributing it to customers.
- **Desalination of ocean water** includes three basic processes: 1) pumping water from the ocean or intermediate source (e.g. a powerplant) to the desalination plant; 2) pre-treating and then desalting water including discharge of concentrate; and 3) distributing water from the desalination plant to customers.
- **Groundwater** usage requires energy for three processes: pumping groundwater from local aquifers to treatment facilities; treating water to applicable standards; and distributing water from the treatment plant to customers. Additional injection energy is sometimes needed for groundwater replenishment.
- Energy required to **recycle water** includes three processes: pumping water from secondary treatment plants to tertiary treatment plants; tertiary treatment of the water, and distributing water from the treatment plant to customers.

The energy intensity results of this study are summarized in the table on the following page. They indicate that recycled water is among the least energy-intensive supply options available, followed by groundwater that is naturally recharged and recharged with recycled water. Imported water and ocean desalination are the most energy intensive water supply options in California. East Branch State Water Project water is close in energy intensity to desalination figures based on current technology, and at some points along the system, SWP supplies exceed estimated ocean desalination energy intensity. The following table identifies energy inputs to each of the water supplies including estimated energy requirements for desalination. Details describing the West Basin system operations are included in the water source sections. Note that the Title 22 recycled water energy figure reflects only the *marginal* energy required to treat secondary effluent wastewater which has been processed to meet legal discharge requirements, along with the energy to convey it to user

Energy Intensity of Water Supplies for West Basin Municipal Water District

	af/yr	Percentage of Total Source Type	kWh/af Conveyance Pumping	kWh/af MWD Treatment	kWh/af Recycled Treatment	kWh/af Groundwater Pumping	kWh/af Groundwater Treatment	kWh/af Desalination	kWh/af WBMWD Distribution	Total kWh/af	Total kWh/year
Imported Deliveries											
State Water Project (SWP) [1]	57,559	43%	3,000	44	NA	NA	NA	NA	0	3,044	175,209,596
Colorado River Aqueduct (CRA) [1]	76,300	57%	2,000	44	NA	NA	NA	NA	0	2,044	155,957,200
(other that replenishment water)											
Groundwater[2]											
natural recharge	19,720	40%	NA	NA	NA	350	0	NA	0	350	6,902,030
replenished with (injected) SWP water [1]	9,367	19%	3,000	44	NA	350	0	NA	0	3,394	31,791,598
replenished with (injected) CRA water [1]	11,831	24%	2,000	44	NA	350	0	NA	0	2,394	28,323,432
replenished with (injected) recycled water	8,381	17%	205	0	790	350	0	NA	220	1,565	13,116,278
Recycled Water											
West Basin Treatment, Title 22	21,506	60%	205	NA	0	NA	NA	NA	285	490	10,537,940
West Basin Treatment, RO	14,337	40%	205	NA	790	NA	NA	NA	285	1,280	18,351,360
	35,843										
Ocean Desalination	20,000	100%	200	NA	NA	NA	NA	3,027	460	3,687	82,588,800

Notes:

NA Not applicable

1 Imported water based on percentage of CRA and SWP water MWD received, averaged over an 11-year period. Note that the figures for imports do not include an accounting for system losses due to evaporation and other factors. These losses clearly exist, and an estimate of 5% or more may be reasonable. The figures for imports above should therefore be understood to be conservative (that is, the actual energy intensity is in fact higher for imported supplies than indicated by the figures).

2 Groundwater values include entire basin, West Basin service area covers approximately 86% of the basin. Groundwater values are specific to aquifer characteristics, including depth, within the basin.

Energy Intensity of Water

Water treatment and delivery systems in California, including extraction of "raw water" supplies from natural sources, conveyance, treatment and distribution, end-use, and wastewater collection and treatment, account for one of the largest energy uses in the state.[1] The California Energy Commission estimated in its 2005 Integrated Energy Policy Report that approximately 19% of California's electricity is used for water related purposes including delivery, end-uses, and wastewater treatment.[2] The total energy embodied in a unit of water (that is, the amount of energy required to transport, treat, and process a given amount of water) varies with location, source, and use within the state. In many areas, the energy intensity may increase in the future due to limits on water resource extraction, and regulatory requirements for water quality, and other factors.[3] Technology improvements may offset this trend to some extent.

> ***Energy intensity*** is the total amount of energy, calculated on a whole-system basis, required for the use of a given amount of water in a specific location.

The Water-Energy Nexus

Water and energy systems are interconnected in several important ways in California. Water systems both provide energy – through hydropower – and consume large amounts of energy, mainly through pumping. Critical elements of California's water infrastructure are highly energy-intensive. Moving large quantities of water long distances and over significant elevation gains, treating and distributing it within the state's communities and rural areas, using it for various purposes, and treating the resulting wastewater, accounts for one of the largest uses of electrical energy in the state.[4]

Improving the efficiency with which water is used provides an important opportunity to increase related energy efficiency. (*"Efficiency"* as used here describes the useful work or service provided by a given amount of water.) Significant potential economic as well as environmental benefits can be cost-effectively achieved in the energy sector through efficiency improvements in the state's water systems and through shifting to less energy intensive local sources. The California Public Utilities Commission is currently planning to include water efficiency improvements as a means of achieving energy efficiency benefits for the state.[5]

Overview of Energy Inputs to Water Systems

There are four principle energy elements in water systems:

1. primary water extraction and supply delivery (imported and local)
2. treatment and distribution within service areas
3. on-site water pumping, treatment, and thermal inputs (heating and cooling)

4. wastewater collection, treatment, and discharge

Pumping water in each of these four stages is energy-intensive. Other important components of embedded energy in water include groundwater pumping, treatment and pressurization of water supply systems, treatment and thermal energy (heating and cooling) applications at the point of end-use, and wastewater pumping and treatment.[6]

1. Primary water extraction and supply delivery
Moving water from near sea-level in the Sacramento-San Joaquin Delta to the San Joaquin-Tulare Lake Basin, the Central Coast, and Southern California, and from the Colorado River to metropolitan Southern California, is highly energy intensive. Approximately 3,236 kWh is required to pump one acre-foot of SWP water to the end of the East Branch in Southern California, and 2,580 kWh for the West Branch. About 2,000 kWh is required to pump one acre foot of water through the CRA to southern California.[7] Groundwater pumping also requires significant amounts of energy depending on the depth of the source. (Data on groundwater is incomplete and difficult to obtain because California does not systematically manage groundwater resources.)

2. Treatment and distribution within service areas
Within local service areas, water is treated, pumped, and pressurized for distribution. Local conditions and sources determine both the treatment requirements and the energy required for pumping and pressurization.

3. On-site water pumping, treatment, and thermal inputs
Individual water users use energy to further treat water supplies (e.g. softeners, filters, etc.), circulate and pressurize water supplies (e.g. building circulation pumps), and heat and cool water for various purposes.

4. Wastewater collection, treatment, and discharge
Finally, wastewater is collected and treated by a wastewater authority (unless a septic system or other alternative is being used). Wastewater is often pumped to treatment facilities where gravity flow is not possible, and standard treatment processes require energy for pumping, aeration, and other processes. (In cases where water is reclaimed and re-used, the calculation of total energy intensity is adjusted to account for wastewater as a *source* of water supply. The energy intensity generally includes the additional energy for treatment processes beyond the level required for wastewater discharge, plus distribution.)

The simplified flow chart below illustrates the steps in the water system process. A spreadsheet computer model is available to allow cumulative calculations of the energy inputs embedded at each stage of the process. This methodology is consistent with that applied by the California Energy Commission in its analysis of the energy intensity of water.

Simplified Flow Diagram of Energy Inputs to Water Systems

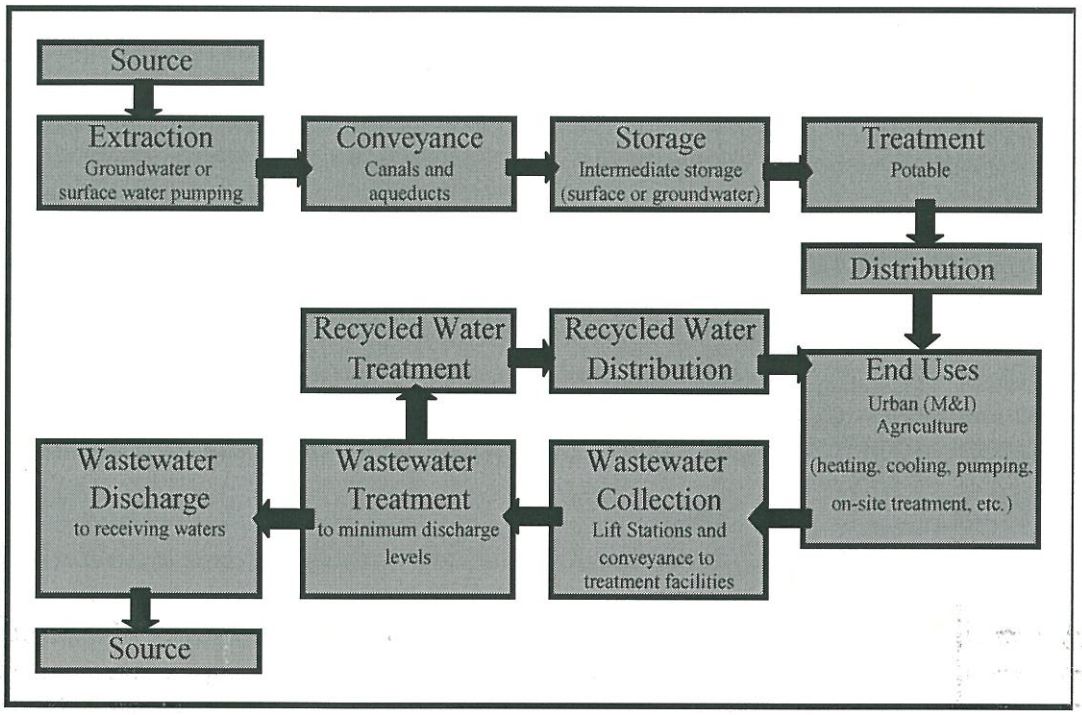

Source: Robert Wilkinson, UCSB[8]

Calculating Energy Intensity

Total energy intensity, or the amount of energy required to facilitate the use of a given amount of water in a specific location, may be calculated by accounting for the summing the energy requirements for the following factors:

- imported supplies
- local supplies
- regional distribution
- treatment
- local distribution
- on-site thermal (heating or cooling)
- on-site pumping
- wastewater collection
- wastewater treatment

Water pumping, and specifically the long-distance transport of water in conveyance systems, is a major element of California's total demand for electricity as noted above. Water use (based on embedded energy) is the next largest consumer of electricity in a typical Southern California home after refrigerators and air conditioners. Electricity required to support water service in the typical home in Southern California is estimated at between 14% to 19% of total residential energy demand.[9] If air conditioning is not a factor the figure is even higher. Nearly three quarters of this energy demand is for pumping imported water.

Interbasin Transfers

Some of California's water systems are uniquely energy-intensive, relative to national averages, due to the pumping requirements of major conveyance systems which move large volumes of water long distances and over thousands of feet in elevation lift. Some of the interbasin transfer systems (systems that move water from one watershed to another) are net energy producers, such as the San Francisco and Los Angeles aqueducts. Others, such as the SWP and the CRA require large amounts of electrical energy to convey water. On *average*, approximately 3,000 kWh is necessary to pump one AF of SWP water to southern California,[10] and 2,000 kWh is required to pump one AF of water through the CRA to southern California.[11]

Total energy savings for reducing the full embedded energy of *marginal* (e.g. imported) supplies of water used indoors in Southern California is estimated at about 3,500 kWh/af.[12] Conveyance over long distances and over mountain ranges accounts for this high marginal energy intensity. In addition to avoiding the energy and other costs of pumping additional water supplies, there are environmental benefits through reduced extractions from stressed ecosystems such as the delta.

Imported Water:
The State Water Project and the Colorado River Aqueduct

Water diversion, conveyance, and storage systems developed in California in the 20th century are remarkable engineering accomplishments. These water works move millions of AF of water around the state annually. The state's 1,200-plus reservoirs have a total storage capacity of more than 42.7 million acre feet (maf).[13] West Basin receives imported water from Northern California through the State Water Project and Colorado River water via the Colorado River Aqueduct. The Metropolitan Water District of Southern California delivers both of these imported water supplies to the West Basin.

California's Major Interbasin Water Projects

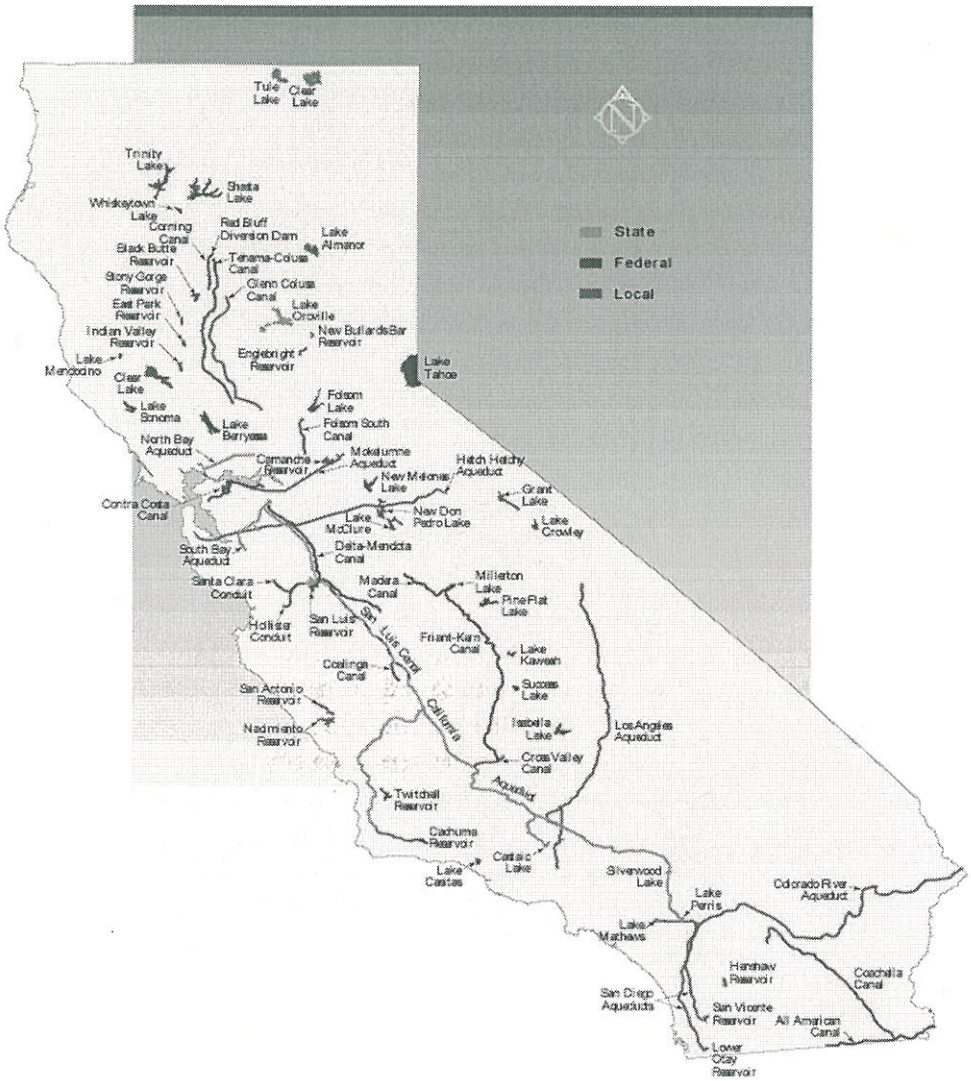

The State Water Project

The State Water Project (SWP) is a state-owned system. It was built and is managed by the California Department of Water Resources (DWR). The SWP provides supplemental water for agricultural and urban uses.[14] SWP facilities include 28 dams and reservoirs, 22 pumping and generating plants, and nearly 660 miles of aqueducts.[15] Lake Oroville on the Feather River, the project's largest storage facility, has a total capacity of about 3.5 maf.[16] Oroville Dam is the tallest and one of the largest earth-fill dams in the United States.[17]

Water is pumped out of the delta for the SWP at two locations. In the northern Delta, Barker Slough Pumping Plant diverts water for delivery to Napa and Solano counties through the North Bay

Aqueduct.[18] Further south at the Clifton Court Forebay, water is pumped into Bethany Reservoir by the Banks Pumping Plant. From Bethany Reservoir, the majority of the water is conveyed south in the 444-mile-long Governor Edmund G. Brown California Aqueduct to agricultural users in the San Joaquin Valley and to urban users in Southern California. The South Bay Pumping Plant also lifts water from the Bethany Reservoir into the South Bay Aqueduct. [19]

The State Water Project is the largest consumer of electrical energy in the state, requiring an average of 5,000 GWh per year.[20] The energy required to operate the SWP is provided by a combination of DWR's own hydroelectric and other generation plants and power purchased from other utilities. The project's eight hydroelectric power plants, including three pumping-generating plants, and a coal-fired plant produce enough electricity in a normal year to supply about two-thirds of the project's necessary power.

Energy requirements would be considerably higher if the SWP was delivering full contract volumes of water. The project delivered an average of approximately 2.0 mafy, or half its contracted volumes, throughout the 1980s and 1990s.[21] Since 2000 the volumes of imported water have generally increased.

The following map indicates the location of the pumping and power generation facilities on the SWP.

Names and Locations of Primary State Water Delivery Facilities

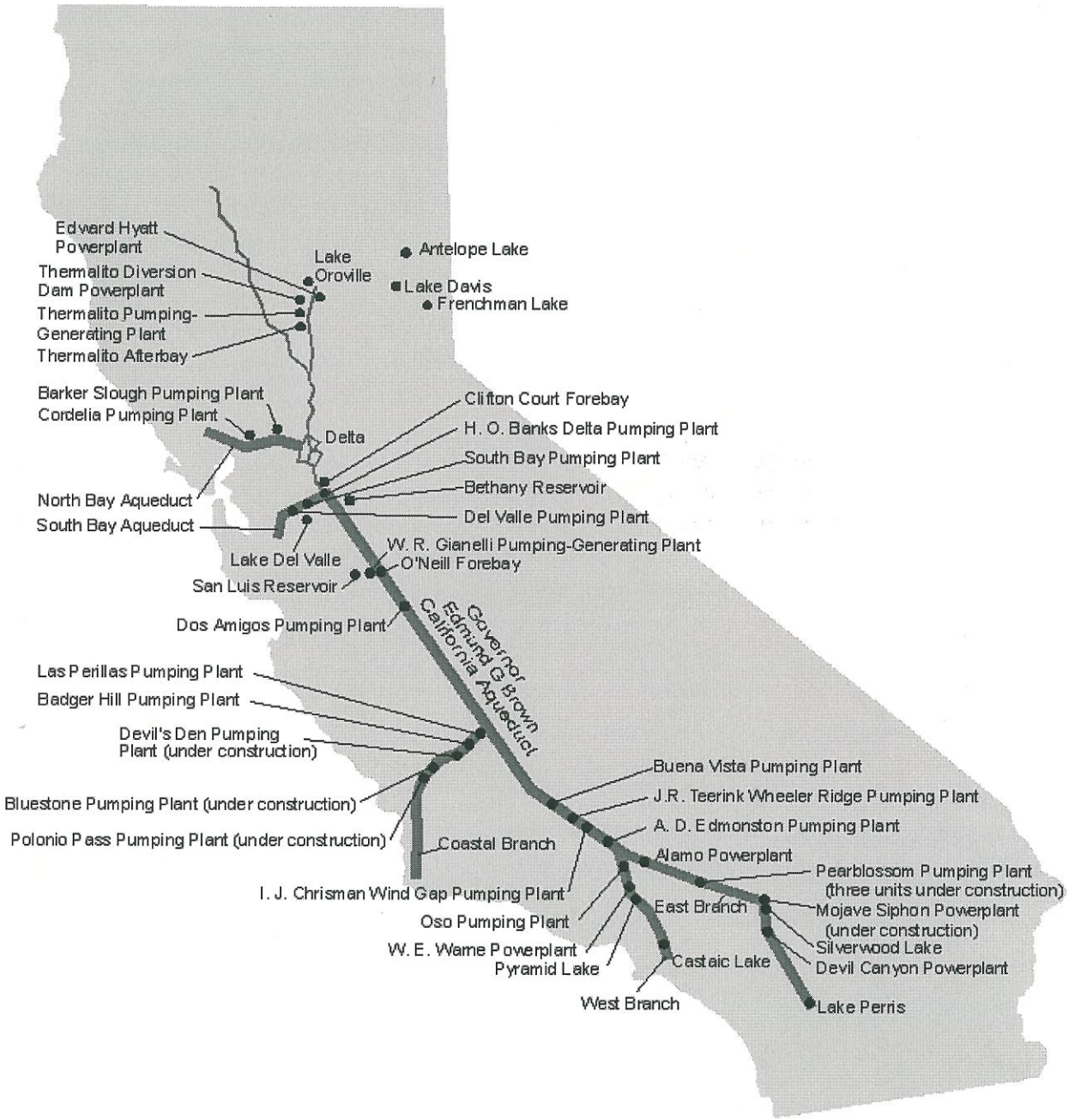

The following schematic shows each individual pumping unit on the State Water Project, along with data for both the individual and cumulative energy required to deliver an AF of water to that point in the system. Note that the figures include energy recovery in the system, but they do not account for losses due to evaporation and other factors. These losses may be in the range of 5% or more. While more study of this issue is in order, it is important to observe that the energy intensity numbers are conservative (e.g. low) in that they assume that all of the water originally pumped from the delta reaches the ends of the system without loss.

State Water Project
Kilowatt-Hours per Acre Foot Pumped
(Includes Transmission Losses)

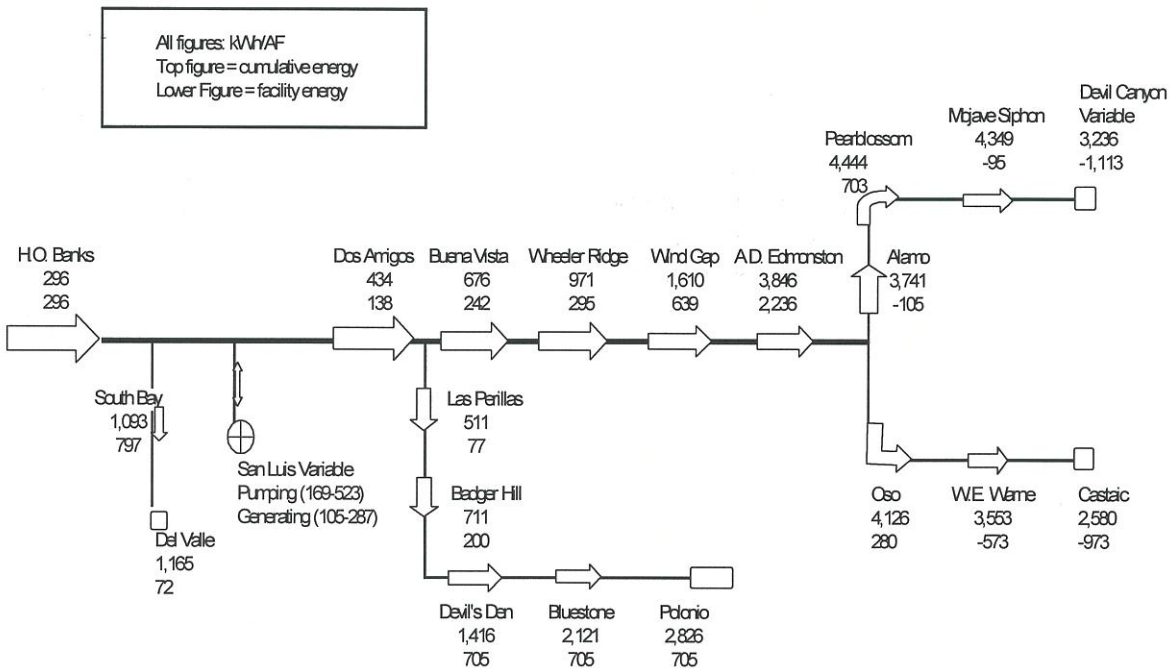

Source: Wilkinson, based on data from: California Department of Water Resources, State Water Project Analysis Office, Division of Operations and Maintenance, *Bulletin 132-97*, 4/25/97.

The Colorado River Aqueduct

Significant volumes of water are imported to the Los Angeles Basin and San Diego in Southern California from the Colorado River via the Colorado River Aqueduct (CRA). The aqueduct was built by the Metropolitan Water District of Southern California (MWD). Though MWD's allotment of the Colorado River water is 550,000 afy, it has historically extracted as much as 1.3 mafy through a combination of waste reduction arrangements with Imperial Irrigation District (IID) (adding about 106,000 afy) and by using "surplus" water.[22] The Colorado River water supplies require about 2,000 kWh/af for conveyance to the Los Angeles basin.

The Colorado River Aqueduct extends 242 miles from Lake Havasu on the Colorado River to its terminal reservoir, Lake Mathews, near Riverside. The CRA was completed in 1941 and expanded in 1961 to a capacity of more than 1 MAF per year. Five pumping plants lift the water 1,616 feet, over several mountain ranges, to southern California. To pump an average of 1.2 maf of water per year into the Los Angeles basin requires approximately 2,400 GWh of energy for the CRA's five pumping plants.[23] On average, the energy required to import Colorado River water is about 2,000 kWh/AF. The aqueduct was designed to carry a flow of 1,605 cfs (with the capacity for an additional 15%).

The sequence for CRA pumping is as follows: The Whitsett Pumping Plant elevates water from Lake Havasu 291 feet out of the Colorado River basin. At "mile 2," Gene pumping plant elevates water 303 feet to Iron Mountain pumping plant at mile 69, which then boosts the water another 144 feet. The last two pumping plants provide the highest lifts - Eagle Mountain, at mile 110, lifts the water 438 feet, and Hinds Pumping Plant, located at mile 126, lifts the water 441 feet.[24]

MWD has recently improved the system's energy efficiency. The average energy requirement for the CRA was reduced from approximately 2,100 kWh /af to about 2,000 kWh /af "through the increase in unit efficiencies provided through an energy efficiency program." The energy required to pump each acre foot of water through the CRA is essentially constant, regardless of the total annual volume of water pumped. This is due to the 8-pump design at each pumping plant. The average pumping energy efficiency does not vary with the number of pumps operated, and MWD states that the same 2,000 kWh/af estimate is appropriate for both the "Maximum Delivery Case" and the "Minimum Delivery Case."[25]

It appears that there are limited opportunities to shift pumping off of peak times on the CRA. Due to the relatively steep grade of the CRA, limited active water storage, and transit times between plants, the system does not generally lend itself to shifting pumping loads from on-peak to off-peak. Under the Minimum Delivery Case, the reduced annual water deliveries would not necessarily bring a reduction in annual peak load, since an 8-pump flow may still need to be maintained in certain months.

Electricity to run the CRA pumps is provided by power from hydroelectric projects on the Colorado River as well as off-peak power purchased from a number of utilities. The Metropolitan Water District has contractual hydroelectric rights on the Colorado River to "more than 20 percent of the firm energy and contingent capacity of the Hoover power plant and 50 percent of the energy and capacity of the Parker power plant."[26] Energy purchased from utilities makes up approximately 25 percent of the remaining energy needed to power the Colorado River Aqueduct.[27]

Minimizing the Need for Inter-Basin Transfers

For over 100 years, California has sought to transfer water from one watershed for use in another. The practice has caused a number of problems. As of 2001, California law requires that the state examine ways to "*minimize the need to import water from other hydrologic regions*" and report on these approaches in the official State Water Plan.[28] A new focus and priority has been placed on developing *local* water supply sources, including efficiency, reuse, recharge, and desalination. The law directs the Department of Water Resources as follows:[29]

> The department, as a part of the preparation of the department's Bulletin 160-03, shall include in the California Water Plan a report on the development of regional and local water projects within each hydrologic region of the state, as described in the department's Bulletin 160-98, to improve water supplies to meet municipal, agricultural, and environmental water needs and *minimize the need to import water from other hydrologic regions.*

(Note that Bulletin 160-03 became Bulletin 160-05 due to a slip in the completion schedule.)

The legislation set forth the range of local supply options to be considered:

> The report shall include, but is not limited to, regional and local water projects that use technologies for desalting brackish groundwater and ocean water, reclaiming water for use within the community generating the water to be reclaimed, the construction of improved potable water treatment facilities so that water from sources determined to be unsuitable can be used, and the construction of dual water systems and brine lines, particularly in connection with new developments and when replacing water piping in developed or redeveloped areas.

This law calls for a thorough consideration in the state's official water planning process of work that is already going on in various areas of the state. The significance of the legislation is that for the first time, local supply development is designated as a priority in order to minimize inter-basin transfers.

The Department of Water Resources State Water Plan (Bulletin 160-05) reflects this new direction for the state in its projection of water supply options for the next quarter century. The following graph clearly indicates the importance of local water supplies from various sources in the future.

California State Water Plan 2005
Water Management and Supply Options for the Next 25 Years

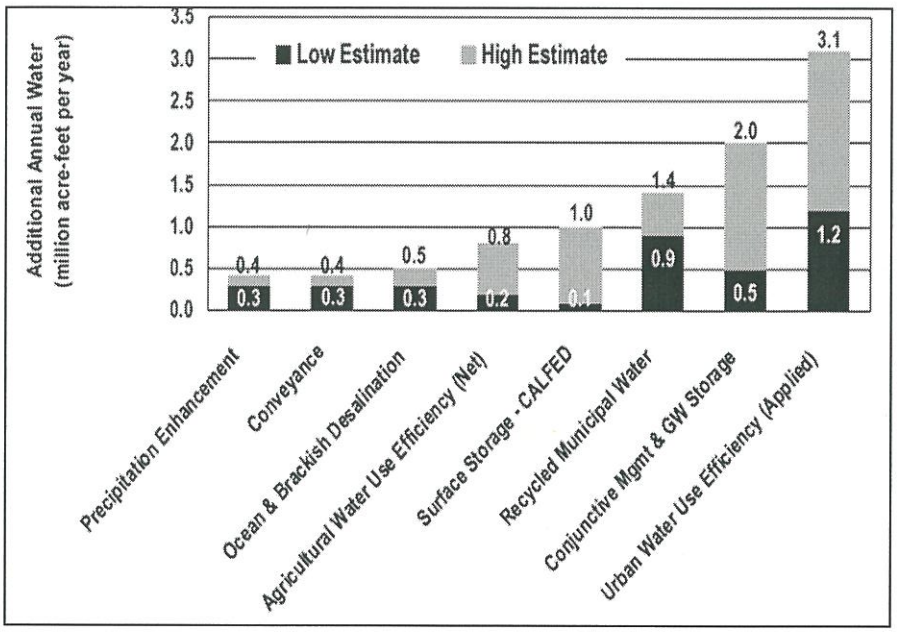

Source: *California Water Plan Update 2005*.[30]

Energy Requirements for Treatment of State Water Project and the Colorado River Aqueduct Supplies

Imported SWP and CRA supplies require an estimated 44 kWh/af for treatment before it enters the local distribution systems. Water pressure from MWD's system is sufficient to move supplies through the West Basin distribution system without requiring additional pressure.

Groundwater and Recycled Water at West Basin MWD

Nearly half of the water used in the service area of the Metropolitan Water District of Southern California (from Ventura to Mexico) is secured from *local* sources, and the percentage of total supplies provided by local sources is growing steadily.[31] This figure is up from approximately one-third of the supply provided by local resources in the mid-1990s.[32] MWD has encouraged local supply development through support for recycling, groundwater recovery, conservation, groundwater storage, and most recently, ocean desalination.

Groundwater and recycled water are important and growing supply sources for West Basin. Water flows through natural hydrologic cycles continuously. The water we use today has made the journey many times. In water recycling programs, water is treated and re-used for various purposes including recharging groundwater aquifers. The treatment processes essentially short-circuit the longer-term process of natural evaporation and precipitation. In cities around the world water is used and then returned to natural water systems where it flows along to more users down stream. It is often used again and again before it flows to the ocean or to a terminal salt sink.

Groundwater at West Basin MWD

Groundwater reservoirs in West Basin are replenished with four water sources; natural recharge, SWP supplies, CRA supplies, and recycled water supplies. The largest portion (approximately 40%) of groundwater supplies is derived from natural recharge. The energy associated with recovering this naturally recharged supply is estimated at 350 kWh/af for groundwater pumping.

Imported water, from both the SWP and CRA, is injected into the groundwater supply in West Basin. The imported water remains at sufficient pressure for injection, so no additional energy is required. The energy requirements for importing water are significant, however, primarily due to the energy associated with importing the water from northern California and the Colorado River. The imported water also passes through MWD's treatment plant, incurring additional energy requirements. The total energy intensity for West Basin's imported water used for recharge of groundwater storage from the SWP is 3,394 kWh/af and from the CRA is 2,394 kWh/af.

Recycled water is also used to recharge groundwater in the basin. West Basin replenishes groundwater by injecting RO treated recycled water from the West Basin Water Recycling Facility (WBWRF). The total energy use is 1,565 kWh/af. Details for the recycled water energy are described in the next section.

Recycled Water at West Basin MWD

Many cities in California are using advanced processes and filtering technology to treat wastewater so it can be re-used for irrigation, industry, and other purposes. In response to increasing demands for water, limitations on imported water supplies, and the threat of drought, West Basin has developed state-of-the-art regional water recycling programs. Water is increasingly being used more than once within systems at both the end-use level and at the municipal level. This is because scarce water resources (and wastewater discharges) are increasing in cost and because cost-effective technologies and techniques for re-using water have been developed that meet health and safety requirements. At the end-use, water is recycled within processes such as cooling towers and industrial processes prior to entering the wastewater system. Once-through systems are increasingly being replaced by re-use technologies. At the municipal level, water re-use has become a significant source of supplies for both landscape irrigation and for commercial and industrial processes. MWD of Southern California is supporting 33 recycling programs in which treated wastewater is used for non-potable purposes. [33]

West Basin provides customers with recycled water used for municipal, commercial and industrial applications. Approximately 27,000 AF of recycled water is annually distributed to more than 210 sites in the South Bay. These sites use recycled water for a wide range of non-potable applications. Based in El Segundo, California, the WBWRF is among the largest projects of its kind in the nation, producing five qualities of recycled water with the capacity at full build-out to recycle 100,000 AF per year of wastewater from the Los Angeles Hyperion Treatment Plant.

In 1998, West Basin began to construct the nation's only regional high-purity water treatment facility, the Carson Regional Water Recycling Facility (CRWRF). A pipeline stretching through five South Bay communities connects the CRWRP to West Basin's El Segundo facility. At the CRWRF, West Basin ultra-purifies the recycled water it gets from the El Segundo facility. From the CRWRF, West Basin uses service lines to transport two types of purified water to the BP Refinery in Carson. The West Basin expansion also includes a new disposal pipeline to carry brine reject water from the CRWRF to a Los Angeles County Sanitation District's outfall.

In order to provide perspective on the energy requirements for the WBWRF, two water qualities and associated energy intensity are presented. "Title 22" water, produced by a gravity filter treatment system, requires conveyance pumping energy from Hyperion to WBWRF at 205 kWh/af. The water flows through the filters via gravity, thus no additional energy is required for treatment. The final energy requirement is 285 kWh/af for distribution with a total energy requirement of 490 kWh/af. This is the lowest grade of recycled water that WBWRF produces. Contrasting the Title 22 water, WBWRF produces RO water with a total energy requirement of 1,280 kWh/af. This includes 205 kWh/af for conveyance from Hyperion, 790 kWh/af for treatment with RO, and 285 kWh/af for distribution.

More than 210 South Bay sites use 9 billion gallons of West Basin's recycled water for applications including irrigation, industrial processes, indirect potable uses, and seawater barrier injection. West Basin has been successful in changing the perception of recycled water from merely a conservation tool with minimal applications to a cost-effective business tool that can reduce costs and improve reliability.

Local oil refineries are major customers for West Basin's recycled water. The Chevron Refinery in El Segundo, the Exxon-Mobile refinery in Torrance, and the BP refinery in Carson use recycled water for cooling towers and in the boiler feed systems.

Ocean Water Desalination Development

Desalination technologies are in use around the world. A number of approaches work well and produce high quality water. Many workable and proven technology options are available to remove salt from water. During World War Two, desalination technology was developed as a water source for military operations.[34] Grand plans for nuclear-driven desalination systems in California were drawn up after the war, but they were never implemented due to cost and feasibility problems.

Desalination techniques range from distillation to "reverse osmosis" (RO) technologies. Current applications around the world are dominated by the "multistage flash distillation" process (at about 44% of the world's applications), and RO, (at about 42%).[35] Other desalting technologies include electrodialysis (6%), vapor compression (4%), multi-effect distillation (4%), and membrane softening (2%) to remove salts.[36] All of the ocean desalination projects currently in place or proposed for municipal water supply in California employ RO technology.

Reverse Osmosis Membranes

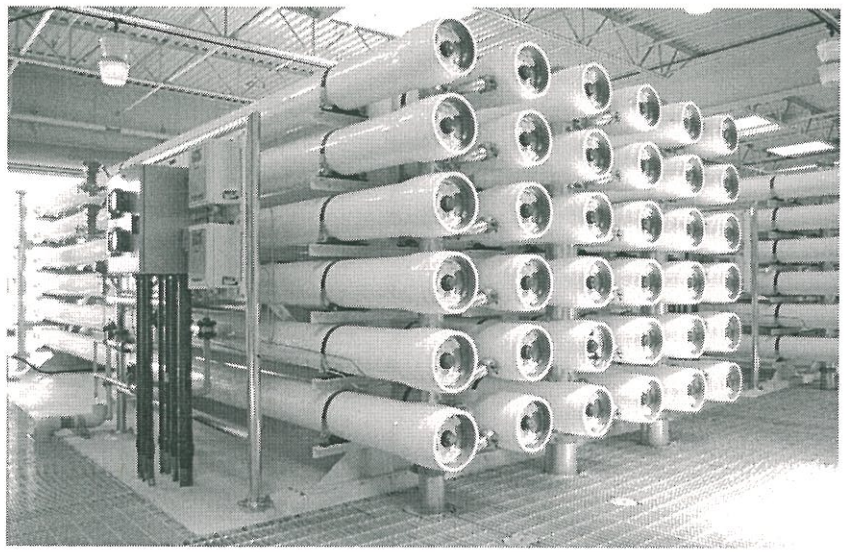

A recent inventory of desalination facilities world-wide indicated that as of the beginning of 1998, a total of 12,451 desalting units with a total capacity of 6.72 afy[37] had been installed or contracted worldwide.[38] (Note that *capacity* does not indicate actual operation.) Non-seawater desalination plants have a capacity 7,620 af/d[39], whereas the seawater desalination plant capacity reached 10,781af/d.[40]

Desalination systems are being used in over 100 countries, but 10 countries are responsible for 75 percent of the capacity.[41] Almost half of the desalting capacity is used to desalt seawater in the Middle East and North Africa. Saudi Arabia ranks first in total capacity (about 24 percent of the world's capacity) followed by the United Arab Emirates and Kuwait, with most of the capacity being made up of seawater desalting units that use the distillation process.[42]

The salinity of ocean water varies, with the average generally exceeding 30 grams per liter (g/l).[43] The Pacific Ocean is 34-38 g/l, the Atlantic Ocean averages about 35 g/l, and the Persian Gulf is 45 g/l. Brackish water drops to 0.5 to 3.0 g/l.[44] Potable water salt levels should be below 0.5 g/l.

Reducing salt levels from over 30 g/l to 0.5 g/l and lower (drinking water standards) using existing technologies requires considerable amounts of energy, either for thermal processes or for the pressure to drive water through extremely fine filters such as RO, or for some combination of thermal and pressure processes. Recent improvements in energy efficiency have reduced the amount of thermal and pumping energy required for the various processes, but high energy intensity is still an issue. The energy required is in part a function of the degree of salinity and the temperature of the water.

West Basin is in the process of developing plans to construct an ocean desalinating plant. Estimated energy requirements have been calculated by Gerry Filteau of Separation Processes, Inc for each step in the process.[45] The values presented for desalination are based on his work. Since the proposed plant will tap the source water at the power plant, there is no ocean intake pumping required. The source water is estimated to require 200 kWh/af this energy will bring ocean water from the power plant to the desalination system, approximately one quarter of a mile in distance. Pre-treatment of the source water is estimated at 341 kWh/af. This figure includes microfiltration and transfer to the RO units via a 5-10 micron cartridge filter. The RO process requires 2,686 kWh/af if operated at the most energy-efficient level. A slightly less efficient but more cost-effective level of operation would require 2,900 kWh/af, or 214 kWh/af additional energy input according to Filteau. Finally, an estimated 460 kWh/af is required to deliver the product water to the distribution system, including elevation gain, conveyance over distance, and pressurization to 90 psi. No additional energy is required to discharge the brine, as it flows back to the ocean outfall line by gravity.

The energy intensity figures presented here for desalination are lower than previous estimates. This is mainly due to improved membrane technologies, efficiency improvements for high pressure pumps, and pressure recovery systems. It should be noted that the figures provided here are based on engineering estimates, not on actual plant operations.

The total energy required to desalinate the ocean water, including each of the steps above, is estimated to be 3,687 kWh/af. If the energy intensity is increased slightly to improve cost-effectiveness, the total figure increases to 3,901 kWh/af.

Summary

This study examined the energy intensity of imported and local water supplies (ocean water, groundwater, and recycled water) for both potable and non-potable uses for West Basin. All water sources require pumping, treatment, and distribution. Differences in energy requirements arise from varying pumping, treatment, and distribution processes needed to produce water to meet appropriate standards for different uses.

The key findings of this study are: 1) the marginal energy required to treat and deliver recycled water is among the *least* energy intensive supply options available, 2) naturally recharged groundwater is low in energy intensity, though replenishment with imported water is not, and 3) current ocean desalination technology is getting close to the level of energy intensity of imported supplies.

Further refinement of the data in this study, such as applying an agency's own energy values, may provide a more accurate basis for decision-making tailored to a unique water system. The information presented, however, provides a reasonable basis for water managers to explore energy (and cost) benefits of increased use of local water sources, and it indicates that desalination of ocean water is getting close to the energy intensity of existing supplies.

Sources

[1] Water systems account for roughly 7% of California's electricity use: See Wilkinson, Robert C., 2000. Methodology For Analysis of The Energy Intensity of California's Water Systems, and an Assessment of Multiple Potential Benefits Through Integrated Water-Energy Efficiency Measures, Exploratory Research Project, Ernest Orlando Lawrence Berkeley Laboratory, California Institute for Energy Efficiency.

[2] California Energy Commission, 2005. *Integrated Energy Policy Report*, November 2005, CEC-100-2005-007-CMF.

[3] Franklin Burton, in a recent study for the Electric Power Research Institute (EPRI), includes the following elements in water systems: "Water systems involve the transportation of water from its source(s) of treatment plants, storage facilities, and the customer. Currently, most of the electricity used is for pumping; comparatively little is used in treatment. For most surface sources, treatment is required consisting usually of chemical addition, coagulation and settling, followed by filtration and disinfection. In the case of groundwater (well) systems, the treatment may consist only of disinfection with chlorine. In the future, however, implementation of new drinking water regulations will increase the use of higher energy consuming processes, such as ozone and membrane filtration." Burton, Franklin L., 1996, *Water and Wastewater Industries: Characteristics and Energy Management Opportunities*. (Burton Engineering) Los Altos, CA, Report CR-106941, Electric Power Research Institute Report, p.3-1.

[4] Wilkinson, Robert C., 2000. *Methodology For Analysis of The Energy Intensity of California's Water Systems, and an Assessment of Multiple Potential Benefits Through Integrated Water-Energy Efficiency Measures*, Exploratory Research Project, Ernest Orlando Lawrence Berkeley Laboratory, California Institute for Energy Efficiency.

[5] California Public Utilities Commission, Order Instituting Rulemaking Regarding to Examine the Commission's post-2005 Energy Efficiency Policies, Programs, Evaluation, Measurement and Verification, and Related Issues, Rulemaking 06-04-010 (Filed April 13, 2006)

[6] An AF of water is the volume of water that would cover one acre to a depth of one foot. An AF equals 325,851 gallons, or 43,560 cubic feet, or 1233.65 cubic meters.

[7] Metropolitan Water District of Southern California, *Integrated Resource Plan for Metropolitan's Colorado River Aqueduct Power Operations*, 1996, p.5.

[8] This schematic, based on the original analysis by Wilkinson (2000) has been refined and improved with input from Gary Wolff, Gary Klein, William Kost, and others. It is the basic approach reflected in the CEC IEPR and other analyses.

[9] QEI, Inc., 1992, *Electricity Efficiency Through Water Efficiency*, Report for the Southern California Edison Company, p. 24.

[10] Figures cited are *net* energy requirements (gross energy for pumping minus energy recovered through generation).

[11] Metropolitan Water District of Southern California, *Integrated Resource Plan for Metropolitan's Colorado River Aqueduct Power Operations*, 1996, p.5.

[12] Wilkinson, Robert C., 2000. *Methodology For Analysis of The Energy Intensity of California's Water Systems, and an Assessment of Multiple Potential Benefits Through Integrated Water-Energy Efficiency Measures*, Exploratory Research Project, Ernest Orlando Lawrence Berkeley Laboratory, California Institute for Energy Efficiency.

[13] California Department of Finance. California Statistical Abstract. Tables G-2, "Gross Capacities of Reservoirs by Hydrographic Region," and G-3 "Major Dams and Reservoirs of California." January 2001. (http://www.dof.ca.gov/html/fs_data/stat-abs/toc.htm)

[14] "The SWP, managed by the Department of Water Resources, is the largest state-built, multi-purpose water project in the country. Approximately 19 million of California's 32 million residents receive at least part of their water from the SWP. SWP water irrigates approximately 600,000 acres of farmland. The SWP was designed and built to deliver water, control floods, generate power, provide recreational opportunities, and enhance habitats for fish and wildlife." California Department of Water Resources, *Management of the California State Water Project*. Bulletin 132-96. p.xix.

[15] California Department of Water Resources, 1996, *Management of the California State Water Project*. Bulletin 132-96.p.xix.

[16] Three small reservoirs upstream of Lake Oroville — Lake Davis, Frenchman Lake, and Antelope Lake — are also SWP facilities. California Department of Water Resources, 1996, *Management of the California State Water Project*. Bulletin 132-96.

[17] California Department of Water Resources, 1996, *Management of the California State Water Project*. Bulletin 132-96. Power is generated at the Oroville Dam as water is released down the Feather River, which flows into the Sacramento River, through the Sacramento-San Joaquin Delta, and to the ocean through the San Francisco Bay.

[18] The North Bay Aqueduct was completed in 1988. (California Department of Water Resources, 1996, *Management of the California State Water Project*. Bulletin 132-96.)

[19] The South Bay Aqueduct provided initial deliveries for Alameda and Santa Clara counties in 1962 and has been fully operational since 1965. (California Department of Water Resources, 1996, *Management of the California State Water Project*. Bulletin 132-96.)

[20] Carrie Anderson, 1999, "Energy Use in the Supply, Use and Disposal of Water in California", Process Energy Group, Energy Efficiency Division, California Energy Commission, p.1.

[21] Average deliveries for 1980-89 were just under 2.0 mafy, deliveries for 1990-99 were just over 2.0 mafy. There is disagreement regarding the ability of the SWP to deliver the roughly 4.2 mafy that has been contracted for.

[22] According to MWD, "Metropolitan's annual dependable supply from the Colorado River is approximately 656,000 AF -- about 550,000 AF of entitlement and at least 106,000 AF obtained through a conservation program Metropolitan funds in the Imperial Irrigation District in the southeast corner of the state. However, Metropolitan has been allowed to take up to 1.3 maf of river water a year by diverting either surplus water or the unused portions of other agencies' apportionments." Metropolitan Water District of Southern California, 1999, "Fact Sheet" at: http://www.mwd.dst.ca.us/docs/fctsheet.htm.

[23] Metropolitan Water District of Southern California, 1999, http://www.mwd.dst.ca.us/pr/powres/summ.htm.

[24] The five pumping plants each have nine pumps. The plants are designed for a maximum flow of 225 cubic feet per second (cfs). The CRA is designed to operate at full capacity with eight pumps in operation at each plant (1800 cfs). The ninth pump operates as a spare to facilitating maintenance, emergency operations, and repairs. Metropolitan Water District of Southern California, 1999, Colorado River Aqueduct: http://aqueduct.mwd.dst.ca.us/areas/desert.htm, 08/01/99.

[25] Metropolitan Water District of Southern California, 1996, "Integrated Resource Plan for Metropolitan's Colorado River Aqueduct Power Operations", 1996, p.5.

[26] Metropolitan Water District of Southern California, 1999, "Summary of Metropolitan's Power Operation". February, 1999, p.1, http://aqueduct.mwd.dst.ca.us/areas/desert.htm.

[27] Metropolitan Water District of Southern California, 1999, http://www.mwd.dst.ca.us/pr/powres/summ.htm. MWD provides further important system information as follows: Metropolitan owns and operates 305 miles of 230 kV transmission lines from the Mead Substation in southern Nevada. The transmission system is used to deliver power from Hoover and Parker to the CRA pumps. Additionally, Mead is the primary interconnection point for Metropolitan's economy energy purchases. Metropolitan's transmission system is interconnected with several utilities at multiple

interconnection points. Metropolitan's CRA lies within Edison's control area. Resources for the load are contractually integrated with Edison's system pursuant to a Service and Interchange Agreement (Agreement), which terminates in 2017. Hoover and Parker resources provide spinning reserves and ramping capability, as well as peaking capacity and energy to Edison, thereby displacing higher cost alternative resources. Edison, in turn, provides Metropolitan with exchange energy, replacement capacity, supplemental power, dynamic control and use of Edison's transmission system.

[28] SB 672, Machado, 2001. California Water Plan: Urban Water Management Plans. (The law amended Section 10620 of, and adds Section 10013 to, the Water Code) September 2001.

[29] SEC. 2. Section 10013 to the Water Code, 10013. (a) SB 672, Machado. California Water Plan: Urban Water Management Plans. September 2001, (Emphasis added.)

[30] California Department of Water Resources, 2005. California Water Plan Update 2005. Bulletin 160-05, California Department of Water Resources, Sacramento, CA.

[31] Metropolitan Water District of Southern California, 2000. *The Regional Urban Water Management Plan for the Metropolitan Water District of Southern California*, p.A.2-3.

[32] "About 1.36 maf per year (34 percent) of the region's average supply is developed locally using groundwater basins and surface reservoirs and diversions to capture natural runoff." Metropolitan Water District of Southern California, 1996, "Integrated Resource Plan for Metropolitan's Colorado River Aqueduct Power Operations", 1996, Vol.1, p.1-2.

[33] MWD estimates that reclaimed water will ultimately produce 190,000 AF of water annually. Metropolitan Water District of Southern California, 1999, "Fact Sheet" at: http://www.mwd.dst.ca.us/docs/fctsheet.htm.

[34] Buros notes that "American government, through creation and funding of the Office of Saline Water (OSW) in the early 1960s and its successor organizations like the Office of Water Research and echnology (OWRT), made one of the most concentrated efforts to develop the desalting industry. The American government actively funded research and development for over 30 years, spending about $300 million in the process. This money helped to provide much of the basic investigation of the different technologies for desalting sea and brackish waters." Buros, O.K., 2000. *The ABCs of Desalting, International Desalination Association*, Topfield, Massachusetts, p.5. This very useful summary is available at http://www.ida.bm/PDFS/Publications/ABCs.pdf

[35] Buros, O.K., 2000. *The ABCs of Desalting, International Desalination Association*, Topfield, Massachusetts, p.5. This very useful summary is available at http://www.ida.bm/PDFS/Publications/ABCs.pdf See also; Buros et al.1980. *The USAID Desalination Manual.* Produced by CH2M HILL International for the U.S. Agency for International Development.

[36] Wangnick,Klaus.1998 *IDA Worldwide Desalting Plants Inventory Report No.15.*Produced by Wangnick Consulting for International Desalination Association; and Buros, O.K., 2000. *The ABCs of Desalting, International Desalination Association*, Topfield, Massachusetts, p.5.

[37] Desalination systems with a unit size of 100 m3/d or more. Figures in original cited as 6,000 mgd.

[38] Wangnick Consulting GMBH (http://www.wangnick.com) maintains a permanent desalting plants inventory and publishes the results biennially in co-operation with the International Desalination Association, as the IDA Worldwide Desalting Plants Inventory Report. Thus far, fifteen reports have been published, with the latest report having data through the end of 1997; and see Wangnick,Klaus.*1998 IDA Worldwide Desalting Plants Inventory Report No.15.*Produced by Wangnick Consulting for International Desalination Association. The data cited are as of December 31, 1997.

[39] Cited in original as 9,400,000 m3/d.

[40] Wangnick,Klaus.*1998 IDA Worldwide Desalting Plants Inventory Report No.15.*Produced by Wangnick Consulting for International Desalination Association. (Cited in original in m3d (13,300,000 m3/d).

[41] Wangnick,Klaus.1998 *IDA Worldwide Desalting Plants Inventory Report No.15.*Produced by Wangnick Consulting for International Desalination Association; and Buros, O.K., 2000. *The ABCs of Desalting, International Desalination Association*, Topfield, Massachusetts. The United States ranks second in over-all capacity (16 %) with most of the capacity in the RO process used to treat brackish water. The largest plant, at Yuma, Arizona, is not in use.

[42] Wangnick,Klaus.1998. *IDA Worldwide Desalting Plants Inventory Report No.15.* Produced by Wangnick Consulting for International Desalination Association; and Buros, O.K., 2000. *The ABCs of Desalting, International Desalination Association*, Topfield, Massachusetts.

[43] Salinity levels referenced in metric units.

[44] OTV. 1999. "Desalinating seawater." Memotechnique, Planete Technical Section, No. 31 (February), p.1; and Gleick, Peter H. 2000. *The World's Water: 2000-2001*, Island Press, Covelo, p.94.

[45] Gerry Filteau, Separation Processes, Inc., 2386 Faraday Ave., Suite 100, Calsbad, CA 92008, www.spi-engineering.com

Bureau of Labor Statistics

Average Energy Prices

Los Angeles-Riverside-Orange County

April 2014

BLS
BUREAU OF LABOR STATISTICS
U.S. DEPARTMENT OF LABOR

NEWS RELEASE

WEST INFORMATION OFFICE
San Francisco, Calif.

For release Tuesday, May 20, 2014 **14-910-SAN**

Technical information: (415) 625-2282 • BLSinfoSF@bls.gov • www.bls.gov/ro9
Media contact: (415) 625-2270

AVERAGE ENERGY PRICES, LOS ANGELES-RIVERSIDE-ORANGE COUNTY APRIL 2014

Gasoline prices averaged $4.263 a gallon in the Los Angeles-Riverside-Orange County area in April 2014, the U.S. Bureau of Labor Statistics reported today. Regional Commissioner Richard J. Holden noted that area gasoline prices were down 22.0 cents compared to last April when they averaged $4.043 per gallon. Los Angeles area households paid an average of 17.8 cents per kilowatt hour (kWh) of electricity in April 2014, down from 21.6 cents per kWh in April 2013. The average cost of utility (piped) gas at $1.211 per therm in April was more than the 1.077 cents per therm spent last year. (Data in this release are not seasonally adjusted; accordingly, over-the-year-analysis is used throughout.)

At $4.263 a gallon, Los Angeles area consumers paid 14.7 percent more than the $3.717 national average in April 2014. A year earlier, consumers in the Los Angeles area paid 10.9 percent more than the national average for a gallon of gasoline. The local price of a gallon of gasoline has exceeded the national average by at least 6 percent in the month of April in each of the past five years. (See chart 1.)

Chart 1. Average prices for gasoline, Los Angeles-Riverside-Orange County and the United States, 2010-2014 (as of April)

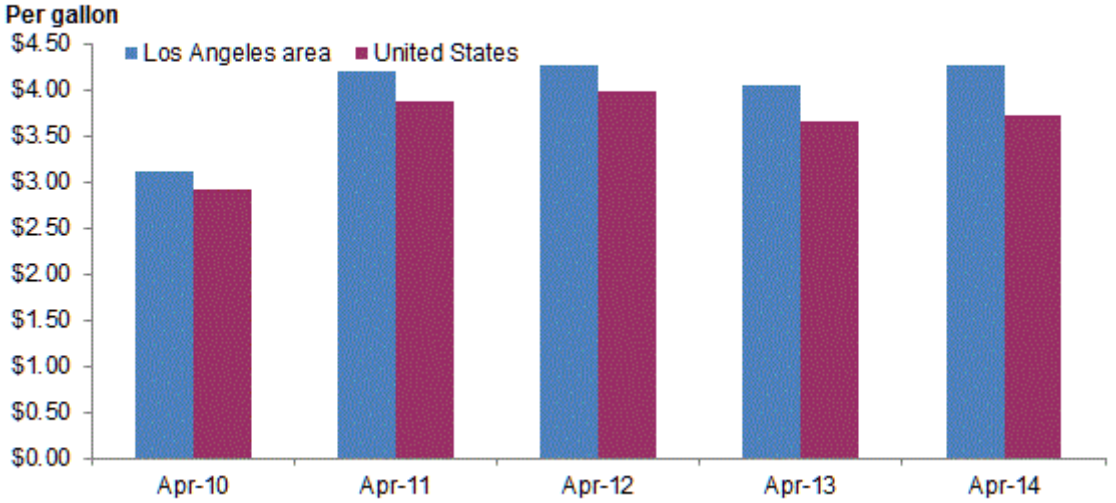

SOURCE: U.S. Bureau of Labor Statistics.

The 17.8 cents per kWh Los Angeles households paid for electricity in April 2014 was 35.9 percent more than the nationwide average of 13.1 cents per kWh. Last April, electricity costs were 68.8 percent higher in Los Angeles compared to the nation. In the past five years, prices paid by Los Angeles area consumers for electricity exceeded the U.S. average by 35.9 percent or more in the month of April. (See chart 2.)

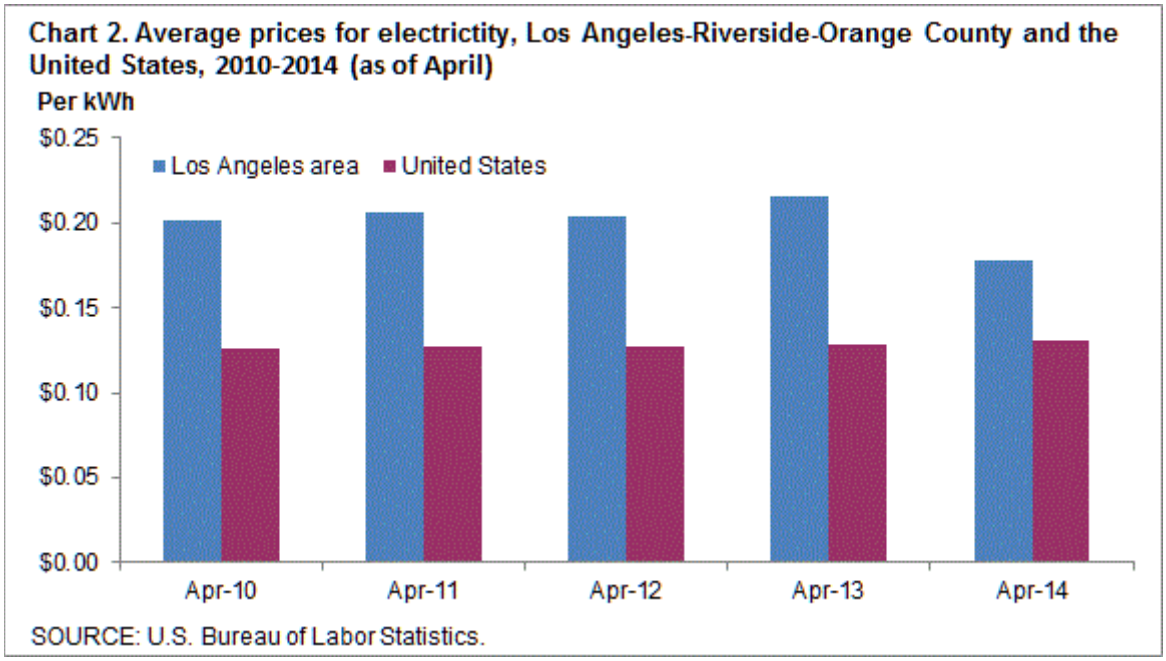

Prices paid by Los Angeles area consumers for utility (piped) gas, commonly referred to as natural gas, were $1.211 per therm, or 6.5 percent more compared to the national average in April 2014 ($1.137 per therm). A year earlier, area consumers paid 5.6 percent more per therm for natural gas compared to the nation. In the Los Angeles area over the past five years, the per therm cost for natural gas in April has varied between 7.2 percent below and 6.5 percent above the U.S. average.
(See chart 3.)

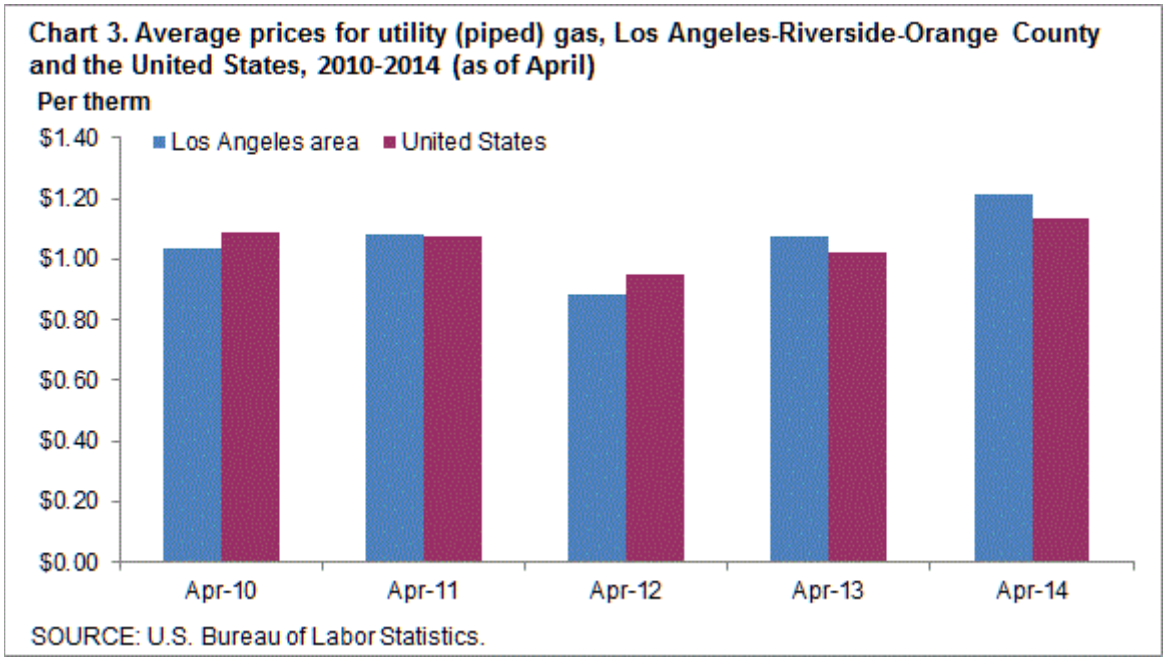

The Los Angeles-Riverside-Orange County, Calif. metropolitan area consists of Los Angeles, Orange, Riverside, San Bernardino and Ventura Counties in California.

Technical Note

Average prices are estimated from Consumer Price Index (CPI) data for selected commodity series to support the research and analytic needs of CPI data users. Average prices for electricity, utility (piped) gas, and gasoline are published monthly for the U.S. city average, the 4 regions, the 3 population size classes, 10 region/size-class cross-classifications, and the 14 largest local index areas. For electricity, average prices per kilowatt-hour (kWh) and per 500 kWh are published. For utility (piped) gas, average prices per therm, per 40 therms, and per 100 therms are published. For gasoline, the average price per gallon is published. Average prices for commonly available grades of gasoline are published as well as the average price across all grades.

Price quotes for 40 therms and 100 therms of utility (piped) gas and for 500 kWh of electricity are collected in sample outlets for use in the average price programs only. Since they are for specified consumption amounts, they are not used in the CPI. All other price quotes used for average price estimation are regular CPI data.

With the exception of the 40 therms, 100 therms, and 500 kWh price quotes, all eligible prices are converted to a price per normalized quantity. These prices are then used to estimate a price for a defined fixed quantity.

The average price per kilowatt-hour represents the total bill divided by the kilowatt-hour usage. The total bill is the sum of all items applicable to all consumers appearing on an electricity bill including, but not limited to, variable rates per kWh, fixed costs, taxes, surcharges, and credits. This calculation also applies to the average price per therm for utility (piped) gas.

Information from this release will be made available to sensory impaired individuals upon request. Voice phone: 202-691-5200, Federal Relay Service: 800-877-8339.

Table 1. Average prices for gasoline, electricty, and utility (piped) gas, Los Angeles-Riverside-Orange County and the United States, April 2013-April 2014, not seasonally adjusted

	Gasoline per gallon		Electricity per kWh		Utillity (piped) gas per therm	
	Los Angeles area	United States	Los Angeles area	United States	Los Angeles area	United States
2013						
April	$4.043	$3.647	$0.216	$0.128	$1.077	$1.020
May	4.060	3.682	0.216	0.131	1.200	1.036
June	4.073	3.693	0.203	0.137	1.275	1.038
July	4.115	3.687	0.203	0.137	1.239	1.025
August	3.955	3.658	0.203	0.137	1.230	1.003
September	4.008	3.616	0.203	0.137	1.183	1.000
October	3.767	3.434	0.215	0.132	1.175	0.999
November	3.651	3.310	0.215	0.130	1.113	0.999
December	3.661	3.333	0.220	0.131	1.109	0.998
2014						
January	3.665	3.378	0.215	0.134	1.195	1.040
February	3.812	3.422	0.215	0.134	1.236	1.078
March	4.046	3.590	0.215	0.135	1.321	1.154
April	4.263	3.717	0.178	0.131	1.211	1.137

60th Street West Wellhead Arsenic Treatment Project

Energy Usage, Greenhouse Gas Emissions, and Arsenic Removal Calculations

Antelope Valley Energy Calculations

	Groundwater Pumping Cost (2014):	**$50**	**per acre-foot**
	Average Annual Imported Water Offset	**3,600**	**AFY**
	Lifespan of Project	**20**	**Years**
	Average Cost of Electricity (2014):	**$0.178**	**per kWh**
	Energy Required for SWP Conveyance and Pumping	**3,000**	**kWh/AF**
Calculated	**Energy Required to Pump GW**	**281**	**kWh/AF**
	Net Energy Savings	**2,719**	**kWh/AF**
	Energy Conserved with Project Annually	**9,788,400**	**kWh/year**
	Energy Used to Import Water (Without Project)	**10,800,000**	**kWh/year**
	Energy Used to Pump GW (With Project)	**1,011,600**	**kWh/year**
	Energy Conserved over Lifespan (20 years)	**195,768,000**	**kWh**

GHG Calculations

	Groundwater Pumping Cost (2014):	50	per acre-foot
	Average Cost of Electricity (2014):	0.178	per kWh
	Energy Required for Conveyance and Pumping	3,000	kWh/AF
	Average Annual Imported Water Offset	3,600	AFY
	Lifespan of Project	20	Years
	Energy Required to Pump GW	281	kWh/AF
	Conversion Factor	0.724	lbs of CO2/kWh
	Net Energy Savings	2,719	kWh/AF
GHG Emissions Avoided	Net Energy Savings x Conversion Factor	1,969	lbs CO2/AF
	Net Energy Savings Converted to Metric Tons	1	metric tons/AF
	Avoided Carbon Emissions Annually	**3,215**	**metric tons**
	Avoided Emissions Over Lifespan	64,290	metric tons
GHG Emissions to Import Water	Energy Required for Importing x Conv. Factor	2,172	lbs CO2/AF
	Energy Required for Importing Conv. To Met Tons	1	metric tons/AF
	GHG Emissions to Import Water Annually (Without Projec	**3,547**	**metric tons**
GHG Emissions to Pump GW	Energy Required for GW Pumping x Conv Factor	203	lbs CO2/AF
	Energy Required for GW Pumping Conv. to Met Tons	0.092	metric tons/AF
	GHG Emissions to Pump GW Annually (With Project)	**332**	**metric tons**

Arsenic Removal Calculations

	ug/L	mg/L	
	57	0.057	
AFY	mgd	lbs/day	**lbs/year**
3600	3.2148	1.53	**558**

California Climate Action Registry General Reporting Protocol

Reporting Entity-Wide Greenhouse Gas Emissions

Version 3.1 | January 2009

Thus, regional/power pool emission factors for electricity consumption can be used to determine emissions based on electricity consumed. If you can obtain verified emission factors specific to the supplier of your electricity, you are encouraged to use those factors in calculating your indirect emissions from electricity generation. If your electricity provider reports an electricity delivery metric under the California Registry's Power/Utility Protocol, you may use this factor to determine your emissions, as it is more accurate than the default regional factor. Utility-specific emission factors are available in the Members-Only section of the California Registry website and through your utility's Power/Utility Protocol report in CARROT.

This Protocol provides power pool-based carbon dioxide, methane, and nitrous oxide emission factors from the U.S. EPA's eGRID database (see Figure III.6.1), which are provided in Appendix C, Table C.2. These are updated in the Protocol and the California Registry's reporting tool, CARROT, as often as they are updated by eGRID.

To look up your eGRID subregion using your zip code, please visit U.S. EPA's "Power Profiler" tool at www.epa.gov/cleanenergy/energy-and-you/how-clean.html.

Fuel used to generate electricity varies from year to year, so emission factors also fluctuate. When possible, you should use emission factors that correspond to the calendar year of data you are reporting. CO_2, CH_4, and N_2O emission factors for historical years are available in Appendix E. If emission factors are not available for the year you are reporting, use the most recently published figures.

U.S. EPA Emissions and Generation Resource Integrated Database (eGRID)

The Emissions & Generation Resource Integrated Database (eGRID) provides information on the air quality attributes of almost all the electric power generated in the United States. eGRID provides search options, including information for individual power plants, generating companies, states, and regions of the power grid. eGRID integrates 24 different federal data sources on power plants and power companies, from three different federal agencies: EPA, the Energy Information Administration (EIA), and the Federal Energy Regulatory Commission (FERC). Emissions data from EPA are combined with generation data from EIA to produce values like pounds per megawatt-hour (lbs/MWh) of emissions, which allows direct comparison of the environmental attributes of electricity generation. eGRID also provides aggregated data to facilitate comparison by company, state or power grid region. eGRID's data encompasses more than 4,700 power plants and nearly 2,000 generating companies. eGRID also documents power flows and industry structural changes. www.epa.gov/cleanenergy/egrid/index.htm.

Figure III.6.1 eGRID Subregions

Source: eGRID2007 Version 1.1, December 2008 (Year 2005 data).

Analytical Results for Arsenic

County of Los Angeles

Department of Agricultural Commissioner/Weights and Measures

May 19-20, 2014

COUNTY OF LOS ANGELES

Department of Agricultural Commissioner/ Weights and Measures

Environmental Toxicology Laboratory
11012 S. Garfield Ave.
South Gate, California 90280
http://acwm.lacounty.gov

Kurt E. Floren
Agricultural Commissioner
Director of Weights and Measures

Richard K. Iizuka
Chief Deputy

CA State DPH Certificate #1430
County Sanitation ID #10240

May 22, 2014

Iwen Tseng
LACo Dept of Public Works-Waterworks.
1000 South Fremont Avenue
Alhambra, CA 91803-1331

RE: Workorder: E1401326 Special-LancasterStatePrison

Dear Iwen Tseng:

Enclosed are the analytical results for sample(s) received by the laboratory on Monday, May 19, 2014. Results reported herein conform to the most current ELAP standards, where applicable, unless otherwise narrated in the body of the report.

If you have any questions concerning this report, please feel free to contact me at (562)622-0437.

Sincerely,

Thant Zin Win

Chief

Enclosures
Note: All results have no blank correction unless otherwise specified

Protecting Consumers and the Environment Since 1881
To Enrich Lives Through Effective and Caring Service

This report shall not be reproduced, except in full,
without the written consent of LA County ACWM Environmental Toxicology Bureau.

3004.1.0.0

COUNTY OF LOS ANGELES

Department of Agricultural Commissioner/ Weights and Measures

Environmental Toxicology Laboratory
11012 S. Garfield Ave.
South Gate, California 90280
http://acwm.lacounty.gov

Kurt E. Floren
Agricultural Commissioner
Director of Weights and Measures

Richard K. Iizuka
Chief Deputy

SAMPLE SUMMARY

Workorder: E1401326 Special-LancasterStatePrison

Lab ID	Sample ID	Location	Matrix	Date Collected	Date Received
E1401326001	#1 (Well 2 A)	Well #2 A -	Drinking Water	5/19/2014 09:35	5/19/2014 15:00
			Collector:	Gary Hilliardo	
E1401326002	#2 (Well 2 A)	Well #2 A -	Drinking Water	5/19/2014 14:01	5/19/2014 15:00
			Collector:	Gary Hilliardo	

Protecting Consumers and the Environment Since 1881
To Enrich Lives Through Effective and Caring Service

This report shall not be reproduced, except in full,
without the written consent of LA County ACWM Environmental Toxicology Bureau.

3004.1.0.0

COUNTY OF LOS ANGELES

Department of Agricultural Commissioner/ Weights and Measures

Environmental Toxicology Laboratory
11012 S. Garfield Ave.
South Gate, California 90280
http://acwm.lacounty.gov

Kurt E. Floren
Agricultural Commissioner
Director of Weights and Measures

Richard K. Iizuka
Chief Deputy

ANALYTICAL RESULTS

Workorder: E1401326 Special-LancasterStatePrison

Lab ID: **E1401326001** Date Received: 5/19/2014 15:00 Matrix: Drinking Water
Sample ID: **#1 (Well 2 A)** Date Collected: 5/19/2014 09:35
System Number: Purpose:
System Name: Sample Type:

Parameters	Results	Units	Report Limit	MDL	DF	Analyzed	By	Qual	MCL
METALS, DISSOLVED									
Analysis Desc: EPA 200.8, Dissolved	Analytical Method: EPA 200.8, Dissolved								
Arsenic	55.0	ug/L	2.00		1	5/21/2014 12:02	GS		8

Lab ID: **E1401326002** Date Received: 5/19/2014 15:00 Matrix: Drinking Water
Sample ID: **#2 (Well 2 A)** Date Collected: 5/19/2014 14:01
System Number: Purpose:
System Name: Sample Type:

Parameters	Results	Units	Report Limit	MDL	DF	Analyzed	By	Qual	MCL
METALS, DISSOLVED									
Analysis Desc: EPA 200.8, Dissolved	Analytical Method: EPA 200.8, Dissolved								
Arsenic	52.0	ug/L	2.00		1	5/21/2014 12:06	GS		8

Protecting Consumers and the Environment Since 1881
To Enrich Lives Through Effective and Caring Service

This report shall not be reproduced, except in full,
without the written consent of LA County ACWM Environmental Toxicology Bureau.

3004.1.0.0

County of Los Angeles
Agricultural Commissioner/Weights & Measures
ENVIRONMENTAL TOXICOLOGY BUREAU
11012 Garfield Avenue, Bldg B, South Gate, CA 90280
Phone# (562)622-0437 Fax# (562)622-0440

Rush profile # 2158

CHAIN-OF-CUSTODY RECORD

PROJECT NAME: LANCASTER STATE PRISON – WELL 2A

COMPANY NAME: LA COUNTY WWD # 40

ADDRESS: W 60th St, LANCASTER, CA

PHONE # / E-MAIL: ghilliard@dpw.lacounty.gov

SAMPLERS SIGNATURE: Gary Hilliard

ANALYSES REQUESTED

WO# E1401326

SAMPLE ID	DATE	TIME	LOCATIONS	ARSENIC	TEMP °C / pH	# OF BOTTLES	PRESERVATIVE	LAB NUMBER
#1	5/14/14	9:35 AM	WELL # 2A	✓	8			001
#2	5/14/14	2:01 PM	WELL # 2A	✓	↓			002

RELINQUISHED SIGNATURE	DATE / TIME	RELINQUISHED SIGNATURE	DATE / TIME	REMARKS
Gary Hilliard	5-19-14 15:00	[signature]	5-19-14 15:00	
PRINT NAME: Gary Hilliard	SAMPLE CONDITION: ICE: YES / NO; SEALED: YES / NO	PRINT NAME: Oleg	SAMPLE CONDITION: ICE: YES / NO; SEALED: YES / NO	
COMPANY: LA County WWD #40		COMPANY: ETL		
RECEIVE SIGNATURE: [signature]	DATE / TIME	RECEIVE SIGNATURE: [signature]	DATE / TIME 5-19-14 / 15:00	
PRINT NAME: Oleg	SAMPLE CONDITION: ICE: YES / NO; SEALED: YES / NO	PRINTED NAME: Carolina Lopez	SAMPLE CONDITION: ICE: YES / NO; SEALED: YES / NO	
COMPANY: ETL		COMPANY: ETL		

SAMPLE MATRIX:
- ☒ DW
- ☐ WW
- ☐ OTHER: _____

TURN AROUND TIME:
- ☒ SPECIAL RUSH
- ☒ REGULAR
- ☐ OTHER: _____

081910

COUNTY OF LOS ANGELES

Department of Agricultural Commissioner/ Weights and Measures

Environmental Toxicology Laboratory
11012 S. Garfield Ave.
South Gate, California 90280
http://acwm.lacounty.gov

Kurt E. Floren
Agricultural Commissioner
Director of Weights and Measures

Richard K. Iizuka
Chief Deputy

CA State DPH Certificate #1430
County Sanitation ID #10240

June 2, 2014

Iwen Tseng
LACo Dept of Public Works-Waterworks.
1000 South Fremont Avenue
Alhambra, CA 91803-1331

RE: Workorder: E1401348 RUSH-LancasterStatePrison

Dear Iwen Tseng:

Enclosed are the analytical results for sample(s) received by the laboratory on Tuesday, May 20, 2014. Results reported herein conform to the most current ELAP standards, where applicable, unless otherwise narrated in the body of the report.

If you have any questions concerning this report, please feel free to contact me at (562)622-0437.

Sincerely,

Thant Zin Win

Chief

Enclosures
Note: All results have no blank correction unless otherwise specified

Protecting Consumers and the Environment Since 1881
To Enrich Lives Through Effective and Caring Service

This report shall not be reproduced, except in full,
without the written consent of LA County ACWM Environmental Toxicology Bureau.

3004.1.0.0

COUNTY OF LOS ANGELES

Department of Agricultural Commissioner/ Weights and Measures

Environmental Toxicology Laboratory
11012 S. Garfield Ave.
South Gate, California 90280
http://acwm.lacounty.gov

Kurt E. Floren
Agricultural Commissioner
Director of Weights and Measures

Richard K. Iizuka
Chief Deputy

SAMPLE SUMMARY

Workorder: E1401348 RUSH-LancasterStatePrison

Lab ID	Sample ID	Location	Matrix	Date Collected	Date Received
E1401348001	Sample #3 (Well 2 A)	Well 2 A -	Drinking Water	5/20/2014 09:00	5/20/2014 15:30
			Collector:	Gary Hillard	
E1401348002	Sample #4 (Well 2 A)	Well 2 A -	Drinking Water	5/20/2014 14:00	5/20/2014 15:30
			Collector:	Gary Hillard	

Protecting Consumers and the Environment Since 1881
To Enrich Lives Through Effective and Caring Service

This report shall not be reproduced, except in full,
without the written consent of LA County ACWM Environmental Toxicology Bureau.

3004.1.0.0

COUNTY OF LOS ANGELES

Department of Agricultural Commissioner/ Weights and Measures

Environmental Toxicology Laboratory
11012 S. Garfield Ave.
South Gate, California 90280
http://acwm.lacounty.gov

Kurt E. Floren
Agricultural Commissioner
Director of Weights and Measures

Richard K. Iizuka
Chief Deputy

ANALYTICAL RESULTS

Workorder: E1401348 RUSH-LancasterStatePrison

Lab ID: **E1401348001** Date Received: 5/20/2014 15:30 Matrix: Drinking Water
Sample ID: **Sample #3 (Well 2 A)** Date Collected: 5/20/2014 09:00
System Number: Purpose:
System Name: Sample Type:

Parameters	Results	Units	Report Limit	MDL	DF	Analyzed	By	Qual	MCL
METALS, DISSOLVED									
Analysis Desc: EPA 200.8, Dissolved	Analytical Method: EPA 200.8, Dissolved								
Arsenic	50.5	ug/L	2.00		1	5/29/2014 11:55	GS		8

Lab ID: **E1401348002** Date Received: 5/20/2014 15:30 Matrix: Drinking Water
Sample ID: **Sample #4 (Well 2 A)** Date Collected: 5/20/2014 14:00
System Number: Purpose:
System Name: Sample Type:

Parameters	Results	Units	Report Limit	MDL	DF	Analyzed	By	Qual	MCL
METALS, DISSOLVED									
Analysis Desc: EPA 200.8, Dissolved	Analytical Method: EPA 200.8, Dissolved								
Arsenic	51.0	ug/L	2.00		1	5/29/2014 11:59	GS		8

Protecting Consumers and the Environment Since 1881
To Enrich Lives Through Effective and Caring Service

This report shall not be reproduced, except in full,
without the written consent of LA County ACWM Environmental Toxicology Bureau.

3004.1.0.0

Rush.

County of Los Angeles
Agricultural Commissioner/Weights & Measures
ENVIRONMENTAL TOXICOLOGY BUREAU
11012 Garfield Avenue, Bldg B, South Gate, CA 90280
Phone# (562)622-0437 Fax# (562)622-0440

CHAIN-OF-CUSTODY RECORD

PROJECT NAME: LANCASTER STATE PRISON Well 2A

COMPANY NAME: LA COUNTY WWD # 40

ADDRESS: 260 E AVE K-8 LANCASTER, CA 93535

PHONE # / E-MAIL:

SAMPLERS SIGNATURE: Gary Hilliard

WC# E1401348

ANALYSES REQUESTED

SAMPLE ID	DATE	TIME	LOCATIONS	ARSENIC												TEMP °C / pH	# OF BOTTLES	PRESERVATIVE	LAB NUMBER
Sample #3	05 20 14	9:00AM	well 2A	✓												5.4°C			001
Sample #4	05 20 14	2:00PM	Well 2A	✓												5.4°C			002
	05 R2 per Iwen Tseng on 05/29																		

RELINQUISHED SIGNATURE:	DATE / TIME	RELINQUISHED SIGNATURE:	DATE / TIME	REMARKS	SAMPLE MATRIX:
Gary Hilliard	4 19.14 2:00PM	[signature]	5-20-14/15:30		☒ DW
PRINT NAME: Gary HILLIARD	SAMPLE CONDITION: ICE: YES / NO	PRINT NAME: Carolina Lopez	SAMPLE CONDITION: ICE: YES / NO		☐ WW
COMPANY: LA COUNTY WWD	SEALED: YES / NO	COMPANY: ETL	SEALED: YES / NO		☐ OTHER: _____
RECEIVE SIGNATURE:	**DATE / TIME**	**RECEIVE SIGNATURE:**	**DATE / TIME**		**TURN AROUND TIME:**
[signature]	5-20-14/16:20	[signature]	05/20/14/15:30		☒ SPECIAL RUSH
PRINT NAME: Carolina Lopez	SAMPLE CONDITION: ICE: YES / NO	PRINTED NAME: Jose Lamacho	SAMPLE CONDITION: ICE: YES / NO		☐ REGULAR
COMPANY: ETL	SEALED: YES / NO	COMPANY: ETL	SEALED: YES / NO		☐ OTHER: _____

081910

COUNTY OF LOS ANGELES

Department of Agricultural Commissioner/ Weights and Measures

Environmental Toxicology Laboratory
11012 S. Garfield Ave.
South Gate, California 90280
http://acwm.lacounty.gov

Kurt E. Floren
Agricultural Commissioner
Director of Weights and Measures

Richard K. Iizuka
Chief Deputy

CA State DPH Certificate #1430
County Sanitation ID #10240

May 19, 2014

Iwen Tseng
LACo Dept of Public Works-Waterworks.
1000 South Fremont Avenue
Alhambra, CA 91803-1331

RE: Workorder: E1401269 Special Lancaster Arsenic

Dear Iwen Tseng:

Enclosed are the analytical results for sample(s) received by the laboratory on Tuesday, May 13, 2014. Results reported herein conform to the most current ELAP standards, where applicable, unless otherwise narrated in the body of the report.

If you have any questions concerning this report, please feel free to contact me at (562)622-0437.

Sincerely,

Thant Zin Win

Chief

Enclosures
Note: All results have no blank correction unless otherwise specified

Protecting Consumers and the Environment Since 1881
To Enrich Lives Through Effective and Caring Service

This report shall not be reproduced, except in full,
without the written consent of LA County ACWM Environmental Toxicology Bureau.

3004.1.0.0

COUNTY OF LOS ANGELES

Department of Agricultural Commissioner/ Weights and Measures

Environmental Toxicology Laboratory
11012 S. Garfield Ave.
South Gate, California 90280
http://acwm.lacounty.gov

Kurt E. Floren
Agricultural Commissioner
Director of Weights and Measures

Richard K. Iizuka
Chief Deputy

SAMPLE SUMMARY

Workorder: E1401269 Special Lancaster Arsenic

Lab ID	Sample ID	Location	Matrix	Date Collected	Date Received
E1401269001	#1 (Well #3 State Prison)	Well #3 State Prison -	Drinking Water	5/12/2014 12:20	5/13/2014 14:15
			Collector:	Gary	
E1401269002	#2 (Well #3 State Prison)	Well #3 State Prison -	Drinking Water	5/12/2014 15:00	5/13/2014 14:15
			Collector:	Gary	

Protecting Consumers and the Environment Since 1881
To Enrich Lives Through Effective and Caring Service

This report shall not be reproduced, except in full,
without the written consent of LA County ACWM Environmental Toxicology Bureau.

3004.1.0.0

COUNTY OF LOS ANGELES

Department of Agricultural Commissioner/ Weights and Measures

Environmental Toxicology Laboratory
11012 S. Garfield Ave.
South Gate, California 90280
http://acwm.lacounty.gov

Kurt E. Floren
Agricultural Commissioner
Director of Weights and Measures

Richard K. Iizuka
Chief Deputy

ANALYTICAL RESULTS

Workorder: E1401269 Special Lancaster Arsenic

Lab ID: **E1401269001** Date Received: 5/13/2014 14:15 Matrix: Drinking Water
Sample ID: **#1 (Well #3 State Prison)** Date Collected: 5/12/2014 12:20
System Number: Purpose:
System Name: Sample Type:

Parameters	Results	Units	Report Limit	MDL	DF	Analyzed	By	Qual	MCL
METALS, DISSOLVED									
Analysis Desc: EPA 200.8, Dissolved	Analytical Method: EPA 200.8, Dissolved								
Arsenic	80.0	ug/L	2.00		1	5/14/2014 12:11	GS		8

Lab ID: **E1401269002** Date Received: 5/13/2014 14:15 Matrix: Drinking Water
Sample ID: **#2 (Well #3 State Prison)** Date Collected: 5/12/2014 15:00
System Number: Purpose:
System Name: Sample Type:

Parameters	Results	Units	Report Limit	MDL	DF	Analyzed	By	Qual	MCL
METALS, DISSOLVED									
Analysis Desc: EPA 200.8, Dissolved	Analytical Method: EPA 200.8, Dissolved								
Arsenic	86.0	ug/L	2.00		1	5/14/2014 12:15	GS		8

Protecting Consumers and the Environment Since 1881
To Enrich Lives Through Effective and Caring Service

This report shall not be reproduced, except in full,
without the written consent of LA County ACWM Environmental Toxicology Bureau.

3004.1.0.0

County of Los Angeles
Agricultural Commissioner/Weights & Measures
ENVIRONMENTAL TOXICOLOGY BUREAU
11012 Garfield Avenue, Bldg B, South Gate, CA 90280
Phone# (562)622-0437 Fax# (562)622-0440

Profile # 2158

Lancaster Special

CHAIN-OF-CUSTODY RECORD

PROJECT NAME: STATE PRISON WELL #3

COMPANY NAME: LA County WWD Well #3

ADDRESS:

PHONE # / E-MAIL: ghilliard@dpw.lacounty.gov

SAMPLERS SIGNATURE: Gary Hilliard

ANALYSES REQUESTED

WO# E1401269

SAMPLE ID	DATE	TIME	LOCATIONS	ARSENIC	TEMP °C / pH	# OF BOTTLES	PRESERVATIVE	LAB NUMBER
#1	5/12/14	12:20 PM	WELL #3	✓	8			-001
#2	5/12/14	3:00 PM	well #3	✓	8			-002

1 RELINQUISHED SIGNATURE	DATE / TIME	2 RELINQUISHED SIGNATURE	DATE / TIME	REMARKS	SAMPLE MATRIX
Gary Hilliard			5-13-14 / 14:15		☒ DW
PRINT NAME: GARY HILLIARD	SAMPLE CONDITION: ICE: YES / NO	PRINT NAME: Carolina Lopez	SAMPLE CONDITION: ICE: YES / NO		☐ WW
COMPANY: LA County WWD	SEALED: YES / NO	COMPANY: ETL	SEALED: YES / NO		☐ OTHER: _____
RECEIVE SIGNATURE:	DATE / TIME 5-13-14 / 14:15	RECEIVE SIGNATURE: CLEI	DATE / TIME 5/13/14 / 4:15		TURN AROUND TIME:
PRINT NAME: Carolina Lopez	SAMPLE CONDITION: ICE: YES / NO	PRINTED NAME: Carmen	SAMPLE CONDITION: ICE: YES / NO		☐ SPECIAL RUSH
COMPANY: ETL	SEALED: YES / NO	COMPANY: ETL	SEALED: YES / NO		☒ REGULAR
					☐ OTHER: _____

081910

COUNTY OF LOS ANGELES

Department of Agricultural Commissioner/ Weights and Measures

Environmental Toxicology Laboratory
11012 S. Garfield Ave.
South Gate, California 90280
http://acwm.lacounty.gov

Kurt E. Floren
Agricultural Commissioner
Director of Weights and Measures

Richard K. Iizuka
Chief Deputy

CA State DPH Certificate #1430
County Sanitation ID #10240

May 19, 2014

Iwen Tseng
LACo Dept of Public Works-Waterworks.
1000 South Fremont Avenue
Alhambra, CA 91803-1331

RE: Workorder: E1401293 Special Lancaster Arsenic

Dear Iwen Tseng:

Enclosed are the analytical results for sample(s) received by the laboratory on Wednesday, May 14, 2014. Results reported herein conform to the most current ELAP standards, where applicable, unless otherwise narrated in the body of the report.

If you have any questions concerning this report, please feel free to contact me at (562)622-0437.

Sincerely,

Thant Zin Win

Chief

Enclosures
Note: All results have no blank correction unless otherwise specified

Protecting Consumers and the Environment Since 1881
To Enrich Lives Through Effective and Caring Service

This report shall not be reproduced, except in full,
without the written consent of LA County ACWM Environmental Toxicology Bureau.

3004.1.0.0

COUNTY OF LOS ANGELES

Department of Agricultural Commissioner/ Weights and Measures

Environmental Toxicology Laboratory
11012 S. Garfield Ave.
South Gate, California 90280
http://acwm.lacounty.gov

Kurt E. Floren
Agricultural Commissioner
Director of Weights and Measures

Richard K. Iizuka
Chief Deputy

SAMPLE SUMMARY

Workorder: E1401293 Special Lancaster Arsenic

Lab ID	Sample ID	Location	Matrix	Date Collected	Date Received
E1401293001	3(Well #3)	Well #3 -	Drinking Water	5/13/2014 09:05	5/14/2014 14:45
			Collector:	Gary Hilliard	
E1401293002	4 (Well #3)	Well #3 -	Drinking Water	5/13/2014 13:30	5/14/2014 14:45
			Collector:	Gary Hilliard	

Protecting Consumers and the Environment Since 1881
To Enrich Lives Through Effective and Caring Service

This report shall not be reproduced, except in full,
without the written consent of LA County ACWM Environmental Toxicology Bureau.

3004.1.0.0

COUNTY OF LOS ANGELES

Department of Agricultural Commissioner/ Weights and Measures

Environmental Toxicology Laboratory
11012 S. Garfield Ave.
South Gate, California 90280
http://acwm.lacounty.gov

Kurt E. Floren
Agricultural Commissioner
Director of Weights and Measures

Richard K. Iizuka
Chief Deputy

ANALYTICAL RESULTS

Workorder: E1401293 Special Lancaster Arsenic

Lab ID: **E1401293001** Date Received: 5/14/2014 14:45 Matrix: Drinking Water
Sample ID: **3(Well #3)** Date Collected: 5/13/2014 09:05
System Number: Purpose:
System Name: Sample Type:

Parameters	Results	Units	Report Limit	MDL	DF	Analyzed	By	Qual	MCL
METALS, DISSOLVED									
Analysis Desc: EPA 200.8, Dissolved	Analytical Method: EPA 200.8, Dissolved								
Arsenic	82.5	ug/L	2.00		1	5/16/2014 10:53	GS		8

Lab ID: **E1401293002** Date Received: 5/14/2014 14:45 Matrix: Drinking Water
Sample ID: **4 (Well #3)** Date Collected: 5/13/2014 13:30
System Number: Purpose:
System Name: Sample Type:

Parameters	Results	Units	Report Limit	MDL	DF	Analyzed	By	Qual	MCL
METALS, DISSOLVED									
Analysis Desc: EPA 200.8, Dissolved	Analytical Method: EPA 200.8, Dissolved								
Arsenic	87.0	ug/L	2.00		1	5/16/2014 10:57	GS		8

Protecting Consumers and the Environment Since 1881
To Enrich Lives Through Effective and Caring Service

This report shall not be reproduced, except in full,
without the written consent of LA County ACWM Environmental Toxicology Bureau.

3004.1.0.0

County of Los Angeles
Agricultural Commissioner/Weights & Measures
ENVIRONMENTAL TOXICOLOGY BUREAU
11012 Garfield Avenue, Bldg B, South Gate, CA 90280
Phone# (562)622-0437 Fax# (562)622-0440

Rush.

CHAIN-OF-CUSTODY RECORD

PROJECT NAME: STATE PRISON WELLS

COMPANY NAME: LANCASTER WWD DISTRICT 40

ADDRESS:

PHONE # / E-MAIL: ghilliard@dpw.lacounty.gov

SAMPLERS SIGNATURE: Gary Hilliard

ANALYSES REQUESTED

WO# E14d293

SAMPLE ID	DATE	TIME	LOCATIONS	ARSENIC												TEMP °C / pH	# OF BOTTLES	PRESERVATIVE	LAB NUMBER
Sample #3	4/13/12	9:05AM	well #3	✓															001
Sample #4	4/13/12	1:30PM	well #3	✓															002

RELINQUISHED SIGNATURE	DATE / TIME	RELINQUISHED SIGNATURE	DATE / TIME	REMARKS
Gary Hilliard		[illegible]	5-14-14 14:45	
PRINT NAME: GARY HILLIARD	SAMPLE CONDITION: ICE: YES / NO	PRINT NAME: Oleg	SAMPLE CONDITION: ICE: YES / NO	
COMPANY: LANCASTER LA/COUNTY	SEALED: YES / NO	COMPANY: ETC	SEALED: YES / NO	
RECEIVE SIGNATURE: [illegible]	DATE / TIME 5-14-14 12:15	RECEIVE SIGNATURE: [illegible]	DATE / TIME 5-14-14 / 14:45	
PRINT NAME: Oleg	SAMPLE CONDITION: ICE: YES / NO	PRINTED NAME Carolina Lopez	SAMPLE CONDITION: ICE: YES / NO	
COMPANY: ETC	SEALED: YES / NO	COMPANY ETL	SEALED: YES / NO	

RECEIVED
MAY 14 2014
ENV TOX LAB

SAMPLE MATRIX:
- ☒ DW
- ☐ WW
- ☐ OTHER: _____

TURN AROUND TIME:
- ☒ SPECIAL RUSH
- ☐ REGULAR
- ☐ OTHER: _____

081910

Product sheet for Bayoxide Arsenic Removal Media/Ferric Oxide Adsorptive Media

Severn Trent

SEVERN TRENT SERVICES

Filtration Products

Bayoxide® Arsenic Removal Media - Ferric Oxide Adsorptive Media

The simple and economical SORB 33® arsenic removal technology uses Bayoxide® E33 granular or Bayoxide® E33P pelletized, ferric oxide media, developed by LANXESS and produced for Severn Trent specifically for groundwater source drinking water adsorption. The Bayoxide® media is long-lasting and once exhausted can be sent to a non-hazardous landfill for disposal.

Bayoxide® media has been successfully removing arsenic from drinking water treatment systems since 1999. The media is NSF Standard 61 approved, and has received regulatory approval from agencies in the United Kingdom, France, Hungary and more.

The Bayoxide® media is dry and designed to remove both arsenic (III) and (V) well below 10 µg/L from drinking water sources. Bayoxide® media has a high capacity for arsenic, providing long operating cycles and low operating costs. The media's life expectancy is dependent on site-specific water quality and operating levels. Bayoxide® media will adsorb arsenic in preference to these other ions. Under high pH conditions, high levels of vanadium, phosphate (>1.0 ppm) and silica (>40 ppm) can present interference and reduce the media's adsorption capacity for arsenic. Therefore, Severn Trent Services offers pre-treatment solutions to minimize the effect of interference from these ions.

As the global provider of Bayoxide®, Severn Trent Services inventories large volumes of the media and can readily meet first install and refill needs of our clients.

Bayoxide® E33 Media

Bayoxide® E33P Media

Features & Benefits

- Removes As (III) and As (V) to < 4 µg/L
- Robust Bayoxide media has high capacity for arsenic
- Long media life under continuous operation
- Very low residual (backwash) effluents: <0.1% of water treated
- No re-pumping required
- No chemicals for regeneration
- Small footprint
- Dry media

Severn Trent Services
5415 W. Sligh Avenue, Suite 102
Tampa, FL 33634
Tel 813 886 9331
Toll 800 364 3931
Fax 813 886 0651
info@severntrentservices.com
www.severntrentservices.com

565.0200.0

Bayoxide® media is filled into the adsorption vessels from sacks by gravity or by hydraulic eduction. The exhausted media is non-hazardous and can be sent to a landfill, passing TCLP or landfill leaching requirements. Spent media can be removed hydraulically or by vacuum.

Bayoxide® E33 Media Specification

The dry, crystalline granular Bayoxide® E33 media was designed with a high capacity for arsenic, providing long operating cycles and low operating costs.

- Chemical Designation: Synthetic Iron Oxide
- Fe_2O_3 Content: >70%
- Specific Surface Area: 120 – 200 m^2/g
- Sieve Analysis:
  - <0.5 mm, 20 % max
  - >2.0 mm, 5% max
- Density: Approx. 3.6 gm/cm^3
- NSF Standard 61 and Drinking Water Inspectorate (DWI) Approved

Adsorption tests on Bayoxide® E33 have shown that it will adsorb antimony, cadmium, chromate, lead, molybdenum, selenium and vanadium.

Bayoxide® E33P Media Specification

Bayoxide® E33P is a pelletized version of the granular Bayoxide® E33 arsenic removal media, and offers advantages over the original granular formulation. The pelletized Bayoxide® E33P media has the same high capacity for arsenic removal as the original media. The pellet composition has a more uniform and sharper pore configuration, which improves product handling. As a result pressure drop is reduced across the media bed requiring less frequent backwashes. Bayoxide® E33P can also be loaded into the vessel in the dry state and creates minimal dust.

- Chemical Designation: Synthetic Iron Oxide
- Fe_2O_3 Content: >70%
- Specific Surface Area: 120 – 200 m^2/g
- Sieve Analysis:
  - <1.0 mm, 20 % max
  - >1.4 mm, 5% max
- Density: Approx. 3.6 gm/cm^3
- NSF Standard 61 and Drinking Water Inspectorate (DWI) Approved

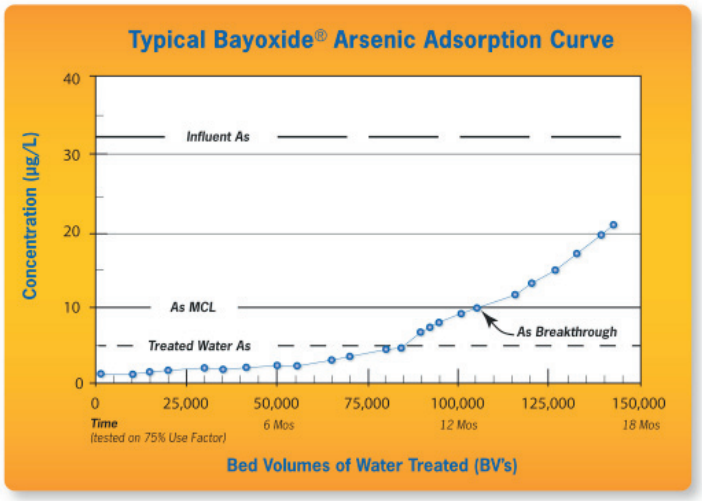

In this illustration, water containing 32 µg/L arsenic can be treated to about 105,000 bed volumes before the treated water's arsenic level exceeds the 10 µg/L MCL. Bayoxide® E33 has a gradual breakthrough curve that allows operators to efficiently manage the system without the need for emergency media exchange due to sharp break through seen from other media.

Bayoxide® E33 is a registered trademark of Bayer, AG

565.0200.0 04/07

SORB 33® As Removal System Sizing & Estimate

Severn Trent

SORB 33® As Removal System Sizing & Estimate

Project Name & General Information

Client:	**LA County, CA**	Average Flow:	**1.80**	MGD Avg
Name of Site:	Well No. 2 & 3 - Combined	Well Capacity:	**2,500**	gpm
Primary Contact:	Iwen Tseng	Treatment Flow:	**2,500**	gpm
Engineer:		Op Factor: 12.0 Hrs/Day or **50%**	0.0%	Bypass

System Design

SORB 33® Model No:	EAS-9014	Contact Time (EBCT) & Bed Depth:	6.2 Min / 3.4 ft
Adsorber No & Size:	Four 14.0 ft Diameter	Average Treatment Rate:	1,800,000 gals/Day
System Footprint:	64'L x 16'W x 14'H	Design Flow Rate per Adsorber:	1,250 gpm
Flow Configuration:	Series	Loading Rate (Specific Velocity):	8.1 gpm/ft^2
Adsorptive Media:	Bayoxide E33 Granules	Estimated Working Capacity:	59,600 BV's
Media Quantity:	66,115 lbs (29.98 MT)	Media Cycle Life:	16.9 Months
	2,076 cubic ft		8.5 Months/Vessel
Backwash Volume:	21,970 gals/vessel	Volume Treated per Cycle:	925.6 million gals
SORB Backwash Rate:	1690 gpm	Arsenic Analysis:	**73.2** µg/L As
pH Adjustment:	pH Adjust from 8.8 to 7.4	HCl Flow: 3.3 gpH	Annual Usage: 14,460 gals 35%
Special Features:		Norm HCl Flow: 3.3 gpH	Pres: 75 psig

System Configuration

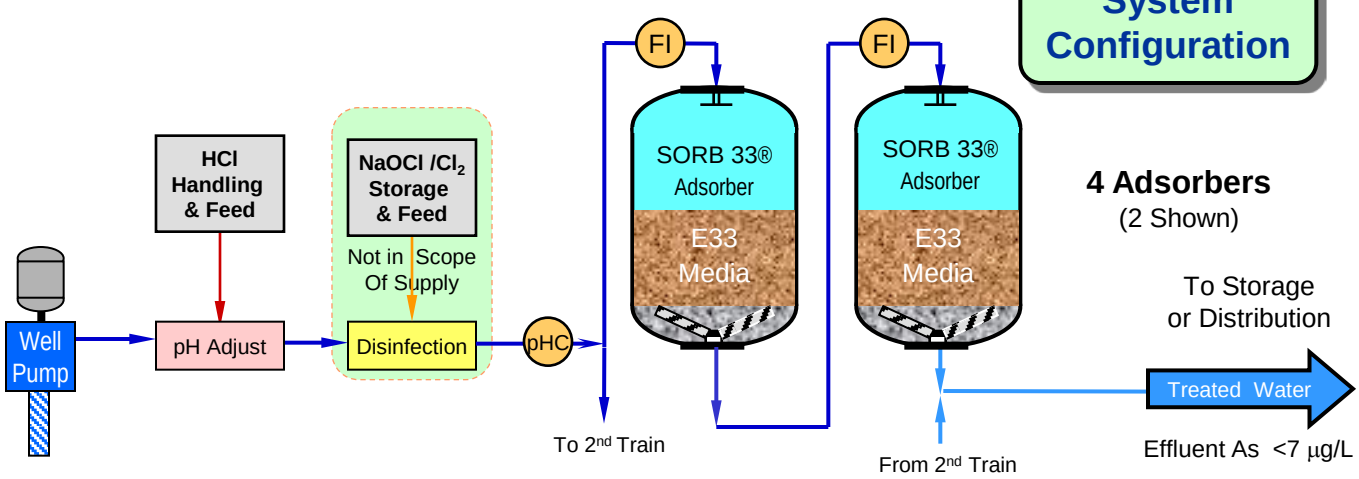

4 Adsorbers
(2 Shown)

To Storage or Distribution

Budgetary Capital & Operating Costs

Annual O&M Costs: **$316,000** per Yr or **$157 / Acre Ft**

Total Water Volume Treated: **926** Million Gallons

Special Notes

No PO_4, SiO_2 or V Assays

Projected BW every 6-9 days

Assumed: Well utilization = 50%

Well Pressure = 75 psig

Issued: 05-Jun-14 MAL : Y13

SEVERN TRENT SERVICES

Inorganics Products

Case Studies for Ferric Oxide Adsorption Technology (Bayoxide)

Arsenic Treatment: Process Optimization Using Granular Ferric Oxide Adsorption

How U.K., U.S. Teams Optimized Arsenic Removal Process and Media Over Nearly a Decade

Teamwork Rids Southern California City of Arsenic Problem

Optimizing Arsenic Treatment System Yields Significant Cost Savings

1 April 2005

Arsenic Treatment: Process Optimization Using Granular Ferric Oxide Adsorption

Introduction

With increasing regulation, the global water treatment market has been tasked with finding commercially available technologies suitable for treating and removing arsenic contamination in drinking water to levels below 10 µg/l. At Severn Trent, initial evaluation of arsenic removal technologies centered on a variety of technologies which were thought to be the best suited for this application (Table 1: Comparison Technologies). However, through detailed lab, pilot and full scale research, the use of iron oxide adsorptive media proved itself as a viable technology for reducing arsenic levels across varying drinking water supplies.

Adsorption is a continuous process conducted at a specific flow rate or velocity, normally about 7 gpm/ft, downward through a fixed bed adsorber. Empty bed contact time (EBCT), which dictates the amount of water resident within the bed required to effect complete arsenic adsorption, is another key process parameter. An attractive characteristic of adsorption technology is its simplicity and relatively low cost. For example, coagulation filtration has higher initial capital costs and is labor intensive, with labor costs often not adequately accounted for in operating cost estimates. In addition, this technology is more complex than adsorption, a key factor for utilities without centralized treatment plants.

Methods

At the onset of developing an arsenic removal research program, Severn Trent approached LANXESS (formerly Bayer AG, Germany) to develop a media that could be used to treat high levels. After lab testing different iron oxide media samples, Bayoxide® E33 demonstrated that it had the most important aspects of a viable iron oxide media, namely: it has a high capacity for arsenic, is mechanically robust, is stable with a uniform grain size, has a low leaching potential, has minimal head-loss build-up and is immediately effective in a start-stop process. Severn Trent also initiated a lab-based research program to characterize the performance of the media in a broad array of waters. A statistically significant array of tests was performed with a background water assay based upon NSF 53 water.

After the successful completion of laboratory testing, pilot plant work was undertaken to further research arsenic removal rates, effect of pH, pre-oxidation requirements, impact on disinfection and the effect of other ions. One of Severn Trent's most challenging pilot programs on the performance of the Bayoxide® E33 media was conducted on a potable water source in New Mexico, United States. The water source was considered challenging due to its high arsenic levels, high pH and high levels of vanadium, a metal that is co-adsorbed by the media. The water analysis, adsorption data and graph for the New Mexico pilot program, which includes a program summary, are shown in Figure 1.

Understanding the effects of other ions is important to the design of an adsorption process because water sources that contain iron, manganese, phosphate, silica, sulfate and vanadium, have been shown to affect process performance. Table 2 details the variations in water quality evaluated during pilot plant testing undertaken by Severn Trent to further refine the predicted full-scale performance of the Bayoxide® E33 media. Hydraulic performance was also studied; evaluating media grain size, empty bed contact time (EBCT), head-loss, differential pressure, bed expansion and backwash volume requirements.

Results and Discussion

The SORB 33™ system, as the adsorption process came to be called, has a relatively small footprint, making it suitable for retrofitting or upgrading existing treatment plants. The system consists of simple adsorber vessels normally operated in parallel flow configuration, (Figure 2: Standard SORB 33™ Adsorption Process). The primary operator functions for the system are monitoring flow, pressure, pressure differential and total flow treated data; collecting effluent samples for arsenic and other analyses; and ensuring each adsorber vessel is backwashed on a periodic basis.

The SORB 33™ systems are designed with an EBCT range of 3.3 – 4.5 minutes. Routine media backwash or service washes – done normally on a monthly basis – can be initiated automatically on a preset date and time, by volume of water treated, differential pressure readings or by operator initiation. Service washes are important as they stratify the media bed and remove fine particulate material, which could cause increased differential pressures during the normal downflow

WATER & WASTEWATER SOLUTIONS

Get expert industry information, key web links to new technologies & new industry regulations.

View Current Issue » Sign up »

Join our community

Get access to white papers & industry insight and information targeted to your needs.

Register »

operational mode.

Full scale SORB 33™ arsenic removal systems have been in commercial operation since 1999, beginning with 16 arsenic removal treatment facilities treating over 46 million gallons per day (MGD) in the United Kingdom. In the United States, over 45 SORB 33™ adsorbers are installed across 14 sites.

Through this extensive commercial application, the knowledge base for how this adsorptive media works and how best to optimize its performance has grown steadily. Service washing has been extended at some sites from 28 days to greater than 50 days. In fact, some full scale plants have achieved 90 days before experiencing significant increases in differential pressure and requiring a service wash. In addition to reducing service wash frequency, significant backwash volume reductions of up to 65% have also been made through process optimization.

Conclusions

Years of lab and field tests have shown that Bayoxide® E33 iron oxide media is a viable product with a high capacity to remove arsenic contamination in potable water sources. Still, continuous improvement is essential. Additional research is focusing on improving the Bayoxide® E33 media in order to manage difficult water qualities and increase process efficiencies.

To this end, LANXESS has developed a pelletized version of their media which is currently undergoing full scale evaluation at one of Severn Trent's well water sites. The trials to date have shown that the pelletized version of the Bayoxide® E33 media has the same high capacity for arsenic removal as the original media, its handling is better, it has lower associated fine levels with low solids release during backwash and it remains 'dust free' when being loaded into a vessel in the dry state.

In addition, the composition of a new media addresses the problems posed by complex water sources in both drinking and non-drinking water applications. Some of the advantages of this new media are predicted to include a higher capacity for arsenic adsorption together with greater robustness. The new media composition, which has increased adsorption capacity and faster kinetics, will help to address difficult water qualities, where high concentrations of arsenic and heavy metals may occur. A media with a higher mechanical stability leads to better handling and overall process efficiencies. Pilot plant testing on this new media is about to be undertaken.

Table 1-Comparison Technologies

Technology	Process	Chemical Use	Waste Generated	Water Wasted
Iron Oxide Adsorption	Simple	None	Low	<0.1%
Reverse Osmosis	Moderate	Cleaning chemicals	Low	10-25%
Ion Exchange	Complex	Regeneration chemicals	High	2%
Activated Alumina	Complex	Regeneration chemicals	High	5%
Coagulation Microfiltration	Complex	Cleaning, coagulation chemicals	Moderate	5%

Table 2-Variations in Water Quality Assay Range From Pilot Programs

Assay	Range
pH	6.5-8.9
Alkalinity	60-400 mg/L
Hardness	7-350 mg/L
Fluoride	<0.1-2.0 mg/L
Phosphate	<0.01-0.90 mg/L
Silica	5-100 mg/L
Sulfate	5-150 mg/L
Total dissolved solids	100-800 mg/L
Metals:	
Arsenic	**11-200 µg/L**

Chromium	2-50 µg/L
Iron	<50-1,500 µg/L
Vanadium	<5-100 µg/L

Figure 1

Figure 2

Test Program Summary

A city well in central New Mexico was selected as the first U.S. site for demonstrating the SORB 33™ As Removal process, and Well #13 was selected out of the 17 sites due to its As level, near that of the current MCL. pH adjustment to <7.0 was employed to improve As removal. Lessons learned at the NM site included: 1) Vanadium (V) is co-adsorption by the GFO media; 2) pH adjustment from high ambient levels will improve GFO adsorption cap for As in waters with adverse qualities, and 3) V breakthrough occurs earlier than As.

Synopsis

Test Duration:	4.0 Months
Contact Time:	3.0 Min EBCT
Well Water As:	49 ˜g/L
Ambient pH:	9.0
Treatment:	40,000 Bed Volumes
pH Adjustment:	Yes
Target pH:	6.7
Reagent:	HCl
Interferents:	Yes
Vanadium:	75 ˜g/L

Bed Volumes Treated	Effluent As (˜g/L)	Effluent V (˜g/L)	Treated Water pH
1,175	5	5	6.9
3,630	5	5	7.1
4,591	5	8	7.3
9,588	3	15	7.2
12,768	6	25	7.1
16,721	5	17	6.5
20,246	2	42	6.7
24,078	7	54	6.6
28,933	8	55	6.8
32,525	5	58	6.6
34,200	9	68	6.7
35,689	9	71	6.5
39,200	9	67	6.5
41,362	15	75	6.5
45,443	14	74	6.7

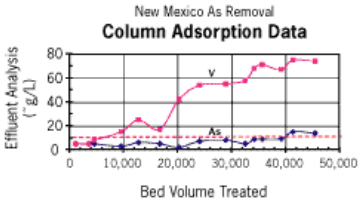

Well Water Analysis

pH	9.00		Fluoride		mg/L F	Chromium	12	˜g/L Cr
Alkalinity	115.0	mg/L $CaCO_3$	Phosphate	<0.05	mg/L PO_4	Iron	<50	˜g/L Fe
Hardness	7.8	mg/L $CaCO_3$	Silica	20.2	mg/L SiO_2	Lead	<3	˜g/L Pb
Suspended Solids	1.0	mg/L	Sulfate	74.2	mg/L SO_4	Manganese	<15	˜g/L Mn
Turbidity	0.16	NTU	Arsenic	49	˜g/L As	Selenium	<5	˜g/L Se
Chloride	4.7	mg/L Cl	As(III)	<1	˜g/L As	Vanadium	78	˜g/L V

Other Key Analyses:

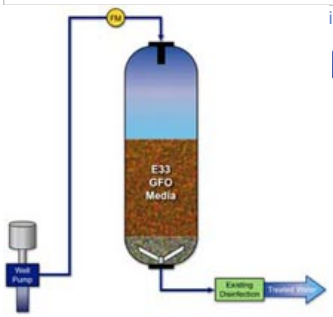

For more information, contact Severn Trent Services at info@severntrentservices.com.

Like 0 Tweet 0 g+1 0

2011-2014© SEVERN TRENT SERVICES

2007 NEWS

1 October 2007

How U.K., U.S. Teams Optimized Arsenic Removal Process and Media Over Nearly a Decade

Arsenic contamination of drinking water is a global concern. The World Health Organization (WHO) recommended in 1993 that the arsenic standard of 50 µg/l be reduced to 10 µg/l. As a result, countries began implementing the 10 µg/l standard on varying time tables. Germany adopted the revised standard in 1996, a European directive was set in 2000 with compliance dates running through 2009, the United Kingdom adopted the standard in 2003 and the United States adopted the standard in 2006.

Facing compliance in December 2003, Severn Trent Water in the United Kingdom started searching in 1994 for a method of arsenic removal that would have high arsenic removal capacity; use a dry medium which was easy to handle, store and ship; and would be tough and reliable both in performance and results, all at an economic cost. Adsorption rapidly appeared as the most effective technology, and the choice of media was then considered.

Earlier research showed that promising results had been achieved on a small scale in a granular form of ferric hydroxide as an adsorption media. A follow-up resulted in a cooperative agreement with German chemical giant, LANXESS (formerly Bayer AG), which had developed a totally new granular ferric oxy hydroxide for Severn Trent Water.

Combining LANXESS's experience with chemicals and Severn Trent's expertise in water treatment resulted in the combination of an adsorption system and ferric oxide media specifically designed for arsenic removal. Following intensive laboratory tests, pilot schemes and full-scale field trials, adsorption systems were installed at 16 affected sites (59 vessels) in the United Kingdom where they have been operating successfully, in some cases since 1999, with arsenic levels consistently lowered to less than 3 µg/l.

The Test

In the course of their investigations, the Severn Trent Water team gathered an immense amount of data on such matters as optimum size and density of the media, adsorption performance, effective hydraulic pressures, backwash intervals and more, enabling them to optimize performance and operating costs.

In an effort to address global demand for a viable arsenic removal treatment technology, Severn Trent Water transferred its knowledge base on adsorption systems and ferric oxide media to its U.S. sister company Severn Trent Services, which then commercialized the SORB 33® arsenic removal system and Bayoxide® E33 adsorptive media. To date, Bayoxide media is the most widely accepted and employed arsenic removal adsorption media in the United States, permitted and operating in more than 26 states.

Tailoring a Proven Product to a New Market

Water quality in the affected areas containing arsenic contamination across the United States varies significantly from the water quality found in the United Kingdom. In the United Sates, a prevalence of interfering ions such as silica and vanadium and high pH can be found in hot spot areas such as in the West. Further, the co-occurrence of elevated arsenic levels with iron and manganese levels is experienced in areas such as the Northeast and Midwest.

As a result of varying water quality and the potential effect on SORB 33 system and Bayoxide media performance, Severn Trent Services established a lab-based research program on U.S. waters, focusing on levels of pH, arsenic, silica, phosphate, vanadium and more across a broad array of waters. Once completed, an extensive series of pilot tests were then undertaken to further predict full-scale operational performance of SORB 33 systems and Bayoxide media on U.S. waters.

The combination of practical experience transferred from Severn Trent Water and investigative back-up conducted by Severn Trent Services to address the U.S. market ensured the introduction of a commercial arsenic removal system with a proven track record, supported by a history of laboratory investigations and actual operational information.

WATER & WASTEWATER SOLUTIONS

Get expert industry information, key web links to new technologies & new industry regulations.

View Current Issue » Sign up »

Join our community

Get access to white papers & industry insight and information targeted to your needs.

Register »

System Optimization
Since the introduction of the SORB process and Bayoxide media in 1998, Severn Trent Water and Severn Trent Services personnel in the United Kingdom and the United States have worked together to develop a number of methods to optimize the performance of the system and media. The issues for which solutions were developed include:

- the “water hammer effect,” which causes media attrition
- interfering ions
- pretreatment to remove particulate matter
- vessel sequencing to optimize media life
- backwash media expansion with temperature

Hammer Effect
The mechanical properties of Bayoxide E33 media can be adversely affected if well water is rapidly brought into contact with the media. This phenomenon is referred to as the “water hammer effect,” whereby the media becomes friable and breaks down to form smaller particles or “fines,” primarily at the interface of the media and the water. The resulting fines cause a high differential pressure across the media bed resulting in a higher frequency of backwashing along with a loss of media.

Over a period of several years, the media depth readings from 64 vessels at U.K. SORB 33 plants were analyzed. The results are summarized below:

- 66% of the vessels in the plants showed no media attrition
- 25% of the vessels showed media attrition between 1% and 10%
- 8% of the vessels showed media attrition between 11% and 20%
- 2% of the vessels showed media attrition between 21% and 30%

The operational experience in the original U.K. plants and newer plants in the United States demonstrated that it is important to minimize the risk of the hammer effect by slowly introducing water when a vessel is brought into normal operation. There are numerous means of controlling the water velocity at start-up. Variable speed pumps with a slow start and motorized valves on the combined vessel inlet have both been used successfully.

It also is important to maintain approximately 24” to 36” of water above the media bed at start-up. The water attenuates the velocity of the incoming water and minimizes the risk of damaging the media.

Interfering Ions
Bayoxide E33 media will remove other cations and anions in addition to arsenic. These ions generally compete for the same adsorption sites as arsenic, and the resulting effect is to reduce the media’s capacity to adsorb arsenic. Experience in the United States has shown that antimony, phosphate, silica, and vanadium reduce the capacity for arsenic adsorption.

In 2006, Severn Trent Services received a U.S. patent for a technology related to a method for removing silica from water treatment adsorption media, including Bayoxide E33. The technology comprises a scrub solution composed of NSF-approved products that can significantly increase the adsorptive capacity of the bed. The arsenic removal media bed soaks in the scrub solution until silica is removed from the media particles, usually 20 minutes at the beginning of a routine backwash cycle. The scrub solution containing the silica is then removed and the media bed flushed during a normal backwash.

Pretreatment to Remove Particulate Matter
In early tests of the SORB system and Bayoxide media, it was discovered that the media will filter out finely divided particulate matter (e.g., precipitated iron, manganese and sand). However, this results in a need for increased frequency of backwashing. The SORB 33 system is designed for limited backwashing, from once every one to four months. As solids are removed by the Bayoxide media, the need to backwash will increase.

If chlorine is used upstream for chlorination or to oxidize arsenite +3 to arsenate +5, other soluble matter (such as iron and manganese) will oxidize to form insoluble solids that get filtered by the media and increase the need to backwash. If wells are prone to have sand, sand separation is a beneficial pretreatment step to limit backwashing requirements on the SORB 33 system and Bayoxide media. When trapped within the Bayoxide media, the abrasive nature of sand can be harmful and cause the media to break down.

In 2005, Severn Trent Services introduced the pretreatment Omni-SORB™ filter media, which is specifically designed to provide removal of iron and manganese compounds from water and wastewater supplies. This pretreatment media enhances the use of Bayoxide, which follows for arsenic removal. Unlike other iron and manganese removal media, Omni-SORB is not a processed mineral. It is an engineered product using refined manganese that has high catalytic activity for oxidation and adsorption of these metals.

Vessel Staggering to Optimize Media Life
Multiple vessels in a SORB 33 treatment plant can be arranged to provide parallel flow or series flow. Depending upon manpower resources or the level of plant automation, vessels can be managed to optimize media life. Provided that one or more vessels contain relatively new media (i.e., treated water from the vessel <5 µg/l arsenic), the vessel containing the oldest media can be kept in operation beyond the statutory arsenic limit of 10 µg/l. Vessel staggering is easier in SORB 33 treatment plants having three or more vessels.

Example:

- Vessel 1 outlet arsenic 1 µg/l

- Vessel 2 outlet arsenic 5 µg/l
- Vessel 3 outlet arsenic 10 µg/l
- Vessel 4 outlet arsenic 16 µg/l
- Combined outlet arsenic (1 + 5 + 10 + 16) / 4 = 8 µg/l

Backwash Media Expansion with Temperature
As with most media, Bayoxide E33 media expands at different rates depending upon backwash water temperatures. This physical property is an important criterion when designing new SORB 33 treatment plants because efficient backwashing of Bayoxide E33 media improves its overall performance. The fines generated in production, transportation, delivery and normal vessel operation are completely removed during a backwash.

Summary of SORB 33 treatment plant benefits
In their use at plants in the United Kingdom and United States, the SORB 33 arsenic removal process and the Bayoxide E33 ferric oxide media have demonstrated a number of operational benefits:

- Plants can be switched off and on to meet water demands
- Treatment plant has a small footprint
- Arsenic removal treatment time is only three minutes
- The wastewater generated is minimal and non-hazardous
- Some of the Severn Trent Water SORB 33 plants have had zero process water loss
- SORB 33 plants are designed with little or no automation, reducing operating complexity by limiting the number of interfacing systems
- If required, SORB 33 plants can be fully automated
- Exhausted Bayoxide E33 and OmniSORB media is generally disposed to landfill but it can be regenerated if deemed necessary.

For more information, e-mail info@severntrentservices.com.

Like 0 Tweet 0 +1 0

2011-2014© SEVERN TRENT SERVICES

2008 NEWS

2008 | Select News Article... | View All Stories

1 October 2008

Teamwork Rids Southern California City of Arsenic Problem

On May 13, 2008, a partnership between the City of Loma Linda, Calif., and one of the City's leading corporate citizens took the next step in the step in an 11-year process to improve the local water system. That's when Lockheed Martin, one of the world's leading aerospace companies, transferred to the City ownership and operations of an arsenic removal facility it had built.

The facility was designed and constructed in 2006 to remove naturally occurring arsenic levels in Loma Linda's groundwater to meet stringent USEPA arsenic level requirements of 10 parts per billion (ppb). Before construction, arsenic levels in two water system wells ranged from 18 to 22 ppb.

Since 1997, the City and Lockheed Martin have worked together to enhance the existing water system. Lockheed Martin became involved in the partnership because a predecessor company, Lockheed Propulsion Company, had operated a rocket fuel testing operation in nearby Mentone, Calif., during the 1960s and 1970s. Contaminants associated with those operations, trichloroethylene and perchlorate, had been discovered in the groundwater, and Lockheed Martin has voluntarily worked with local officials to clean up the water supply. System enhancements have included upgrading equipment and technology; developing new water connections with the Cities of Redlands and San Bernardino; and installing treatment facilities.

"Our goal is to provide Loma Linda with the safest water. Therefore, we knew this facility was a step forward in continuing to provide local residents with the highest quality of water," said Brad Owens, Director of Environmental Remediation for Lockheed Martin. "We are dedicated to our partnership with the City of Loma Linda and these improvements. It's something that is very important to us."

Earth Tech AECOM, a global provider of engineering, construction and operations services to the water and wastewater industry, was hired to select the most suitable arsenic treatment system. Pacific Hydratech, a company that provides construction services for the water and oil refining industries, served as the project's general contractor.

Earth Tech AECOM evaluated a number of arsenic removal technologies and eliminated many of them from consideration due to lack of demonstrated ability to meet the arsenic removal target. These technologies included microfiltration, ultrafiltration, nanofiltration, permeable reactive barriers, electrokinetic, phytoremediation and biological treatment. Reverse osmosis and electrodialysis reversal were rejected based on high cost and complications associated with residuals disposal. The precipitative processes were also eliminated from further consideration because of multiple chemical requirements, significant volumes of sludge processing and skilled operator attention needed for proper operation.

After the initial screening, ion exchange and adsorptive processes were selected for detailed evaluation. Two systems, one each from the ion exchange and adsorptive processes, were established as preferred systems, and proposals were requested for each technology. In the end, the SORB 33® arsenic removal technology and Bayoxide® E33 arsenic removal media were selected for the project.

Severn Trent Services developed the SORB 33 process to reduce arsenic contamination across a range of water treatment application sizes, and the technology has been commercially proven to effectively and economically meet USEPA standards for maximum arsenic contaminant levels. Bayoxide E33 is a dry, robust, granular ferric oxide media designed with a high capacity for arsenic, providing long operating cycles and low operating costs.

The City of Loma Linda SORB system is designed to treat up to 3,000 GPM, making it one of the largest such systems in California. The system serves 21,000 residents and businesses. It consists of four carbon steel pressure adsorbers, piping, instrumentation controls and the Bayoxide E33 adsorption media. The well water is fed in parallel downward flow generally through three of the four vessels containing the media. The fourth vessel is maintained in standby. The system includes a pH adjustment unit that feeds carbon dioxide into the feed water to reduce pH to about 8.0. The system also

WATER & WASTEWATER SOLUTIONS

Get expert industry information, key web links to new technologies & new industry regulations.

View Current Issue » Sign up »

Join our community

Get access to white papers & industry insight and information targeted to your needs.

Register »

has a bypass control loop to flow up to 25% of the well water flow around the pH adjustment and arsenic removal adsorbers, subsequently to be blended with the treated water.

Pressure differential through each vessel is measured and used to determine when it is necessary to backwash or “fluff” the media. It has been found that backwashing and resting the beds periodically extends media life. Periodically, each adsorber is taken offline for backwashing to remove media fines that have built up and to fluff up the compacted bed, and then rested for a few days. The backwash water is decanted and later mixed with the plant influent water.

Aside from backwashing, there are no other steps required until the end of the adsorbent’s capacity when it becomes exhausted.

According to Steve Wood, Severn Trent Services’ arsenic regional sales manager, the SORB system has operated as expected, reducing arsenic levels to less than the Maximum Contaminant Level of 10 ppb. “The Loma Linda/Lockheed Martin partnership was very deliberate in their approach to solving the arsenic problem in Loma Linda,” he said. “They investigated more than a dozen different arsenic removal technologies and then extensively tested the adsorptive technology they selected. Over the past 11 years, the partnership has constructed one of the most robust water treatment systems I’ve seen.”

“Our partnership with Lockheed Martin has led to great improvements to our water infrastructure and improved water quality for our residents now and into the future,” said Jarb Thaipejr, Public Works Director for the City of Loma Linda.

For more information, e-mail info@severntrentservices.com.

Like 0 Tweet 0 g+1 0

2011-2014© SEVERN TRENT SERVICES

2010 NEWS

2010 | Select News Article... | View All Stories

1 October 2010

Optimizing Arsenic Treatment System Yields Significant Cost Savings

Since 1886, American Water has been "maintaining high water quality standards and dependable service" and "finding ways to do it better," according to the company's website. The country's largest investor-owned water and wastewater utility company serves the needs of 16 million customers in more than 1,600 communities across the United States.

Arizona American Water, a wholly-owned subsidiary of America Water, is the largest investor-owned utility in Arizona, serving a population of approximately 350,000 northwest of Phoenix. When the Surprise, Ariz., company committed to meeting the January 2006 federal arsenic MCL of 10 ppb, those responsible for choosing the arsenic removal technology stayed true to the parent company's culture. They selected and piloted two distinctly different technologies and then worked to optimize each through thorough testing and evaluation.

Arsenic, of course, is common throughout Arizona, and many water and wastewater utilities have installed a variety of arsenic removal technologies including reverse osmosis, coagulation filtration, ion exchange and adsorption. Arizona American Water decided to pilot one coagulation filtration system and five adsorption systems to treat arsenic levels ranging from 12 to 82 µg/L. The adsorption system selected was the SORB 33® fixed-bed arsenic treatment system and Bayoxide® E33 arsenic removal media from Severn Trent Services.

Arsenic treatment system design criteria

With a combined capacity of 27.1 mgd, the six Arizona American Water water treatment facilities serve a significant portion of the utility's customer base. In order to minimize the rate impact on customers, the company selected the two treatment technologies based on lowest capital, operating and maintenance requirements. The design criteria for the systems, whose arsenic treatment goal was <8 µg/L, included:

- pre-oxidation to be used at all facilities
- silica, phosphate, manganese and vanadium are present in the water supplies and must be monitored for interference with the arsenic removal
- pH must be adjusted as necessary
- incorporating blending vs. 100 percent source flows to maximize system efficiency
- the adsorption system would incorporate a lead/lag design

In order to maximize each system's performance, Arizona American Water implemented a sampling schedule that included biweekly sampling of treated and combined water and quarterly sampling for regulatory requirements. Dosage and bypass sampling results would be used to optimize system operations.

Arizona American Water's waste management strategy for the coagulation filtration system was to maintain a consistent concentration of discharge into its sewer system and to optimize solids handling processes through polymer dosing and mixing. For the SORB system, backwash water would be recycled when possible, and fines in the backwash effluent discharge would be minimized by increasing settling time.

At the adsorptive treatment plants, which became operational in February and March 2006, plant capacity ranged from the 3.1-mgd Agua Fria Water Plant 5, where arsenic levels measured from 6 to 82 µg/L, to the 8.0-mgd Sun City West Water Plant 2, where arsenic levels were found to be 6 to 25 µg/L. Blending was required at some of the plants to accommodate high levels of fluoride and/or nitrates, while arsenic levels in the 6.8-mgd Agua Fria Water Plant 2's source water were low enough that 100 percent bypass flows were possible.

WATER & WASTEWATER SOLUTIONS

Get expert industry information, key web links to new technologies & new industry regulations.

View Current Issue » Sign up »

Join our community

Get access to white papers & industry insight and information targeted to your needs.

Register »

The adsorptive process

The SORB system employs a simple "pump and treat" process that flows pressurized well or spring water through a fixed-bed pressure vessel containing the iron oxide media where the arsenic removal occurs. Bayoxide is a granular ferric oxide media, and arsenic has a high affinity for iron oxide-based minerals, adsorbing quickly to the surface of the media. This makes granular iron oxide media, such as Bayoxide, excellent for arsenic removal.

Other contaminants common to groundwater also have a high affinity for iron-based minerals. This creates competition among ions, resulting in less arsenic being adsorbed per volume of treated water. Bayoxide E33 is specifically designed to adsorb arsenic while reducing competition with other ions, thus improving the arsenic-adsorbing potential of the media. These characteristics enable systems using the dry, crystalline granular media to achieve long operating cycles, reduce pressure drops and improve the operational cost. The media does not need to be replaced for six months to two years, and the spent media is sent to a non-hazardous landfill.

Evaluating the arsenic treatment systems

As Arizona American Water staff completed monthly and quarterly milestones with the coagulation filtration and adsorption systems, they were impressed with the differences between the two systems. Operation of the coagulation filtration system was more labor intensive than the adsorption systems, requiring more chemicals, more instrumentation on site that needed monitoring and significantly more maintenance time each day. As staff became more familiar with the coagulation filtration system, they identified several operational improvements, including maintaining a more consistent concentration of sludge, preventing the sludge from "caking" in the collection system. This was done by continuously running the recycle pumps rather than operating them in normal duty. In addition, the staff increased the frequency of cleaning the clarifiers to semi-annually.

"By contrast, adsorption is a pretty simple process that was easily adopted by the staff," said Jeremiah Mecham, operations superintendent for Arizona American Water. "And that's what we expected based upon the system's reputation and the experience of others."

Among the enhancements Arizona American Water staff recommended for the adsorption systems was installing high pressure relief valves to replace rupture discs for pressure relief. "Two of our sites are below grade, and a ruptured disc would allow water to continue to flow from the vessels, potentially flooding the treatment area," said Mecham. "In addition, we installed piping to carry any water that was released by the pressure relief valves outside the treatment containment area, further preventing possible flooding.

"Process optimization, primarily by bypassing more of the water while still achieving arsenic levels of <8 µg/L, increased media bed volume performance over the performance guarantee by up to 43 percent at the Agua Fria Plant 1 and up to 160 percent at Agua Fria Plant 5. This led to a reduction in the cost per treated bed volume by 30 percent at Agua Fria Plant 1 and 62 percent at Agua Fria Plant 5. As a result, we achieved a savings of more than $1 million by extending the life of the Bayoxide granular iron media through our process optimization.

"Complying with the new arsenic MCL in the Agua Fria District was made relatively simple through the implementation of the SORB systems," Mecham said. "The systems have exceeded our expectations by enabling us to provide clean, safe, EPA-compliant water to our customers at a reasonable cost to Arizona American Water — and ultimately to ratepayers."

For more information, e-mail info@severntrentservices.com.

Tweet 0 g+1 0

2011-2014© SEVERN TRENT SERVICES

Memorandum of Understanding between the Antelope Valley-East Kern Water Agency and Los Angeles County Waterworks District No. 40

August 2013

MEMORANDUM OF UNDERSTANDING

This Memorandum of Understanding ("MOU") is effective as of 8-13-13 by and between Antelope Valley-East Kern Water Agency ("AVEK") and Los Angeles County Waterworks District No. 40 ("Waterworks District").

RECITALS

A. The Waterworks District provides retail water service to customers located within its service area, all of which is also located within AVEK's boundaries. The sources of supply for such service include the native groundwater supply and imported water supply which AVEK has obtained from the State Water Project for delivery on a wholesale basis to retail water purveyors within AVEK's boundaries, such as the Waterworks District.

B. The native groundwater supply available to the Waterworks District is limited in amount and is the subject of a pending adjudication involving scores of other parties who claim the right to a portion of that limited groundwater supply. The imported water supply available to the Waterworks District from AVEK is likewise limited. Depending upon the results of the pending adjudication, the Waterworks District believes that the total combined water supply available to the Waterworks District from native groundwater sources and from imported water sources is insufficient to satisfy existing water service commitments within its service area and additional anticipated development within its service area. The Waterworks District believes that it cannot make additional commitments to provide retail water service to additional customers within its service area unless arrangements are made to obtain additional imported water supplies to service the additional demand.

C. Additional imported water supplies from the State Water Project cannot be held by the Waterworks District, as it is not a State Water Project Contractor, but can be held by AVEK for the benefit of the Waterworks District.

D. The Waterworks District and AVEK have discussed a cooperative strategy to obtain additional imported water supplies that will be held by AVEK but committed to servicing additional demands caused by new development within the service area of the Waterworks District. The purpose of this MOU is to set forth the procedures to be implemented by the Waterworks District and AVEK, immediately, and the commitments that each will make to the other, to obtain the additional imported water supplies necessary to service additional demands caused by additional development within the Waterworks District's service area.

PROCEDURES

1. An applicant seeking a water service commitment from the Waterworks District shall submit a request to the Waterworks District for review and comment.

2. The Waterworks District will identify the local water resources available to address the anticipated water demand for the connection(s) sought by the applicant, which may include recycled water, or such other local resources that the Waterworks District determines are acceptable. The Waterworks District will determine how much additional imported water must be acquired in order to provide retail water service to the applicant's development.

3. The Waterworks District and AVEK will enter into an agreement by which the Waterworks District may require the applicant to deposit with the Waterworks District the amount of money estimated by AVEK to be necessary to fund AVEK's cost of purchasing the additional imported water supplies required by the Waterworks District as a condition of providing a service commitment to the applicant's development. Upon receipt of that deposit by the applicant, the Waterworks District will then deposit that amount with AVEK. The deposit shall cover the estimated purchase price of the additional water supplies, AVEK's cost of completing the environmental assessment under the California Environmental Quality Act and the National Environmental Policy Act (if required), and AVEK's transactional costs including document preparation and review by AVEK staff and legal counsel ("Costs"). As of the effective date of this MOU, Costs are estimated to equal $10,000 for each acre-foot of additional imported water supplies to be acquired; however, AVEK may revise that estimated dollar amount per acre-foot from time to time to reflect changes in anticipated purchase prices and costs, including litigation costs in the event of a legal challenge related to the purchase of the additional water supplies. AVEK may require the amount of the deposit to be augmented as necessary to cover actual Costs that AVEK expects to incur to complete the purchase of the additional imported water supplies, and in such event the Waterworks District will require the applicant to deposit the additional amount with the Waterworks District, which will then make the additional deposit with AVEK. The Waterworks District will develop a form of agreement to be executed between the applicant and the Waterworks District to implement the terms of this paragraph, including hold harmless and indemnification language to protect AVEK and the Waterworks District. The money provided by the applicant must be deposited directly with the Waterworks District, and not into a third party escrow account. AVEK will credit the Waterworks District with interest earned on the deposit with AVEK at the rate paid by the Local Agency Investment Fund of the State of California during the period that the money remains on deposit with AVEK, prorated as necessary to reflect the date of deposit and the date of expenditure or return to the applicant.

4. Upon receipt of the required deposit, AVEK will confirm to the Waterworks District in writing that AVEK has received the required deposit and is committed to acquiring the additional requested water supplies. The Waterworks District, at its option, may then provide the applicant with a written commitment to provide water service to the applicant's development, conditional upon satisfaction of all requirements set forth in the written agreement between the Waterworks District and the applicant.

5. Although AVEK cannot guarantee success, AVEK will undertake all objectively reasonable steps to identify and purchase additional State Water Project Table A Amounts or other water supply entitlements in the amounts requested by the Waterworks District to service the applicant's anticipated demand, including preparation and review of all agreements necessary to effect the purchase of the additional water supplies and the transportation of such supplies to AVEK, completion of environmental analysis pursuant to the California Environmental Quality Act and the National Environmental Policy Act (if applicable), acquisition of such permits as may be required, compliance with all regulatory requirements that may apply, and the defense of such lawsuits or other legal challenges as may be filed to challenge the acquisition of additional water supplies and the transportation of such supplies to their intended place of use. The Waterworks District will cooperate with AVEK in the defense of such lawsuits or legal challenges, will hold AVEK harmless from any such legal challenges, and will include

provisions in its agreement with the applicant which require the applicant to fully indemnify the Waterworks District, in addition to AVEK, from any such challenges.

6. Upon completion of acquisition of the additional water supplies as requested by the Waterworks District and conclusion of all legal proceedings to challenge the acquisition of such supplies or their transportation to the intended place of use, AVEK will notify the Waterworks District in writing, and will provide the Waterworks District with a final accounting of Costs incurred by AVEK. If a balance remains in the deposit by the Waterworks District, AVEK will deliver that excess deposit to the Waterworks District in exchange for the applicant's execution and transmittal to AVEK of a release which releases AVEK and the Waterworks District from all claims of any sort related to the acquisition of the additional water supplies, upon release to applicant of the remaining balance of applicant's deposit. If a final accounting reveals that the amount on deposit with AVEK was insufficient to fully reimburse AVEK for all Costs incurred, the Waterworks District will deposit with AVEK an amount equal to the amount of the deficit, which will be due and payable within ninety days of the date of the final accounting provided to the Waterworks District, and AVEK will concurrently provide the Waterworks District with a release to be signed by the applicant releasing AVEK and the Waterworks District from all claims of any sort related to the acquisition of the additional water supplies.

7. The additional water supplies acquired on behalf of the Waterworks District shall be held by AVEK for exclusive use by the Waterworks District within its retail distribution system. All annual or periodic charges from the State of California allocable to the additional Table A Amount, or from the seller of other water supply entitlements allocable to those entitlements, for the ongoing use of those entitlements, will be paid by AVEK, and in turn AVEK will invoice the Waterworks District for reimbursement. Each such invoice will identify the nature of the charge and how it was calculated. AVEK will provide the Waterworks District with such backup documentation as the Waterworks District may request, and which AVEK may have, upon request. The Waterworks District will pay the invoice to AVEK within forty-five days after receipt. The Waterworks District will be free to recover these amounts from the applicant's specific development, or from its rates and charges imposed on all customers, as the Waterworks District deems appropriate in its discretion.

8. If a temporary period of time exists between AVEK's acquisition of an additional water supply for use by the Waterworks District to provide service to the applicant, and the setting of service connections with meters for the Waterworks District to commence service to the applicant's development, AVEK itself may bear the expense of ongoing annual or periodic charges attributable to the new water supply, without invoicing to the Waterworks District for reimbursement of such charges to AVEK, and in such event AVEK will be authorized to use the additional water supply on a temporary basis to satisfy the demands of other AVEK customers. However, the additional water supply used by AVEK on a temporary basis to address other demands shall not be permanently committed to those other demands, but shall remain available for use by the Waterworks District to service the demands of the applicant when needed. If such water use requires proration of charges between the period of AVEK's use and the commencement of use by the Waterworks District, AVEK will provide the Waterworks District with a copy of its calculation of the prorated charges. If necessary, AVEK and the Waterworks District will meet to resolve any differences or disputes amicably.

9. The above described procedures and commitments may be revised by mutual consent from time to time as appropriate to adjust to changing circumstances or needs, or to conform to orders or procedures resulting from the pending adjudication of groundwater rights in the Antelope Valley. As a new program, AVEK and the Waterworks District commit to meeting annually to review the MOU and implementing agreements, to make modifications as necessary to improve the procedures and correct any inequities that may arise, and, to deal with each other in good faith to address such circumstances or needs.

LOS ANGELES COUNTY WATERWORKS
DISTRICT NO. 40

By _____

Date: 9/3/13

ANTELOPE VALLEY-EAST KERN WATER
AGENCY

By _____

Date: 8/13/13

KBHOME SM

Utility Site

County Reimbursement Submission
July 21, 2009

Summary

Utility Site

	Billed Amount	Projected Future Billing	Total
Best Drilling & Pump	$804,291.00	$181,358.10	$985,649.10
CSI Services	$14,680.00	$353.00	$15,033.00
Pacific Hydrotech	$2,331,370.44	$496,479.56	$2,827,850.00
South Pac Industries	$4,760.00	-	$4,760.00
High Sierra Engineering	$5,490.00	-	$5,490.00
Action Iron Works	-	$19,454.00	$19,454.00
AGI Geotechnical-Geotechnical	$10,300.00	-	$10,300.00
AGI Geotechnical-Concrete	$1,066.55	-	$1,066.55
Power Plus	$9,468.63	$1,052.07	$10,520.70
Edison	$12,754.50	-	$12,754.50
Forma Engineering	$850.00	-	$850.00
Brockmeier	$609,079.05	-	$609,079.05
Pinnacle Land Surveying	$820.00	-	$820.00
Risk Management Professionals	-	$8,630.00	$8,630.00
Certified Payroll			
Total	$3,804,930.17	$707,326.73	$4,512,256.90