BAR SIZE	DIAMETER (db) (INCHES)	WALLS AND SLABS: DEVELOPMENT LENGTH (L_d)(INCHES) "TOP" BARS	WALLS AND SLABS: DEVELOPMENT LENGTH (L_d)(INCHES) OTHER	WALLS AND SLABS: CLASS B LAP SPLICE (INCHES) "TOP" BARS	WALLS AND SLABS: CLASS B LAP SPLICE (INCHES) OTHER	BEAMS AND COLUMNS: DEVELOPMENT LENGTH (L_d)(INCHES) "TOP" BARS	BEAMS AND COLUMNS: DEVELOPMENT LENGTH (L_d)(INCHES) OTHER	BEAMS AND COLUMNS: CLASS B LAP SPLICE (INCHES) "TOP" BARS	BEAMS AND COLUMNS: CLASS B LAP SPLICE (INCHES) OTHER
#3	0.375	12	12	16	16	19	15	24	19
#4	0.5	15	12	20	16	25	19	32	25
#5	0.625	19	15	24	19	31	24	40	31
#6	0.75	22	17	29	22	37	29	48	37
#7	0.875	33	25	42	33	54	42	70	54
#8	1.0	37	29	48	37	62	48	80	62
#9	1.125	46	36	60	46	70	54	91	70
#10	1.25	57	44	74	57	79	61	102	79
#11	1.375	68	53	89	68	87	67	113	87

NOTES:
1 "TOP" BARS IS HORIZONTAL REINFORCEMENT PLACED SO THAT MORE THAN 12" OF FRESH CONCRETE IS CAST IN THE MEMBER BELOW THE DEVELOPMENT LENGTH OR SPLICE.
2 CLEAR SPACING OF BARS BEING DEVELOPED OR SPLICED SHALL
A) NOT BE LESS THAN d_b, HAVE CLEAR COVER NOT LESS THAN d_b, AND STIRRUPS OR TIES THROUGHOUT L_d NOT LESS THAN THE CODE MINIMUM OR;
B) CLEAR SPACING OF BARS WHERE d_b=DIAMETER OF REINFORCING BAR AND L_d=DEVELOPMENT LENGTH.
3 FOR SPECIAL SPLICE REQUIREMENTS FOR COLUMNS AND END BEARING SPLICES IN COMPRESSION SEE ACI 318 CHAPTER 12.
4 TABLE IS BASED ON f'c = 4000 PSI AND fy = 60,000 PSI. LAP SPLICE AND DEVELOPMENT LENGTHS SHALL BE INCREASED FOR LOWER CONCRETE COMPRESSIVE STRENGTH AS FOLLOWS:

	MULTIPLIER		MULTIPLIER
f'c 2500 PSI	1.27	f'c 3500 PSI	1.07
f'c 3000 PSI	1.16	f'c 4500 PSI	0.94

STANDARD HOOK AND LAP SPLICE IN CONCRETE

DETAIL A
NOT TO SCALE

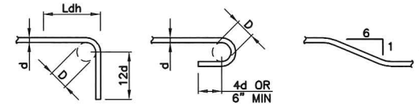

90° STD HOOK 180° STD HOOK MAX OFFSET BEND

D=6d FOR #3 TO #8
D=8d FOR #9 TO #11
D=12d FOR #14 AND #18

PRINCIPAL REINFORCING

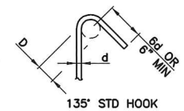

135° STD HOOK

MIN D=1 1/2" FOR #3
MIN D=2" FOR #4
MIN D=2 1/2" FOR #5

STIRRUPS AND TIES

BAR SIZE	DIAMETER (db) (INCHES)	90° STD HOOK (L_{dh}) (INCHES)
#3	0.375	6
#4	0.5	7
#5	0.625	9
#6	0.75	10
#7	0.875	12
#8	1.0	14
#9	1.125	15
#10	1.25	17
#11	1.375	19

NOTES:
1 ALL BENDS SHALL BE MADE COLD.
2 #14 AND #18 BARS SHALL BE BEND TESTED AND LAB APPROVED PRIOR TO BENDING.

BAR BENDS

DETAIL B
NTS

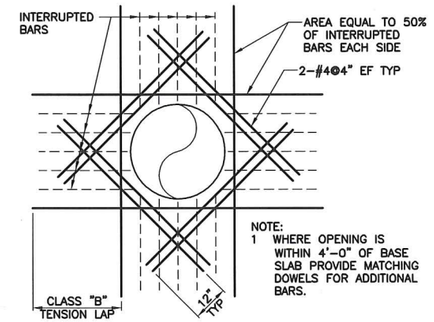

NOTE:
1 WHERE OPENING IS WITHIN 4'-0" OF BASE SLAB PROVIDE MATCHING DOWELS FOR ADDITIONAL BARS.

REINFORCEMENT AT CIRCULAR OPENINGS GREATER THAN 12"

DETAIL C
NTS

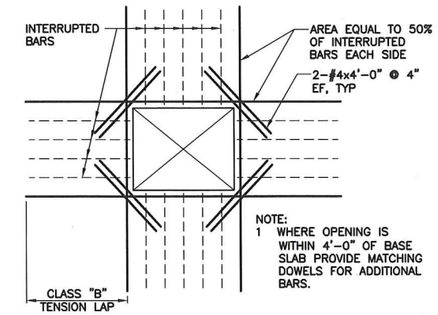

NOTE:
1 WHERE OPENING IS WITHIN 4'-0" OF BASE SLAB PROVIDE MATCHING DOWELS FOR ADDITIONAL BARS.

REINFORCEMENT AT RECTANGULAR OPENINGS GREATER THAN 12"

DETAIL D
NTS

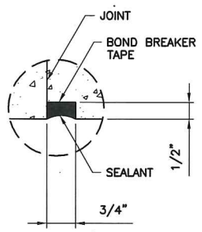

JOINT SEALANT

DETAIL E
NTS

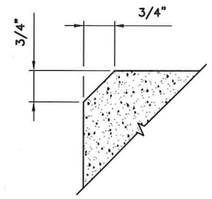

NOTES:
1 SEE CAST-IN-PLACE CONCRETE NOTES.
2 NO CHAMFER REQUIRED WHERE FLUSH EXTERIOR CMU OR BRICK MASONRY ABOVE.

CHAMFER

DETAIL F
NTS

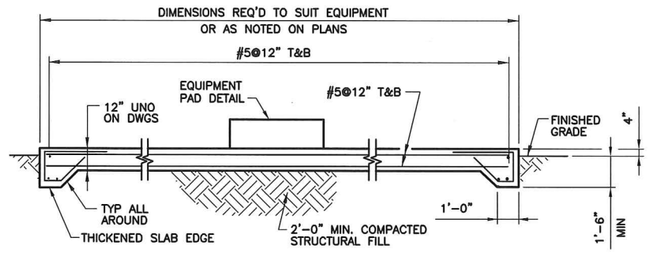

NOTE:
1 PADS FOR PUBLIC UTILITY EQUIPMENT SHALL BE CONSTRUCTED IN ACCORDANCE WITH THE APPROPRIATE AGENCY REQUIREMENTS.

EXTERIOR EQUIPMENT SLAB

DETAIL G
NTS

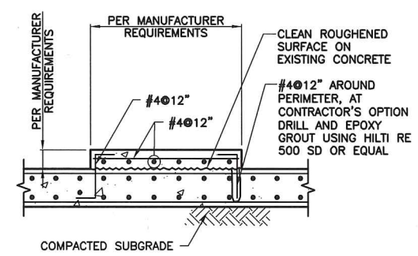

HOUSEKEEPING PAD

DETAIL H
NTS

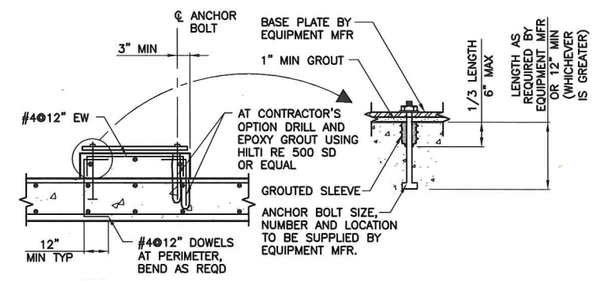

NOTE:
1 DIMENSIONS OF PAD AS REQUIRED TO SUIT EQUIPMENT (4" MIN UNLESS PAD IS CAST INTEGRALLY WITH SLAB).

EQUIPMENT PAD

DETAIL J
NTS

© 2014 CDM SMITH ALL RIGHTS RESERVED.
REUSE OF DOCUMENTS: THESE DOCUMENTS AND DESIGNS PROVIDED BY PROFESSIONAL SERVICE, INCORPORATED HEREIN, ARE THE PROPERTY OF CDM SMITH AND ARE NOT TO BE USED, IN WHOLE OR PART, FOR ANY OTHER PROJECT WITHOUT THE WRITTEN AUTHORIZATION OF CDM SMITH.

REV. NO.	DATE	DRWN	CHKD	REMARKS

DESIGNED BY: A. HAHN
DRAWN BY: A. JOHNSON
SHEET CHK'D BY: –
CROSS CHK'D BY: –
APPROVED BY: –
DATE: JUNE, 2014

WARNING
0 1/2" 1"
IF THIS BAR SCALE DOES NOT MEASURE 1" THIS DWG HAS BEEN REDUCED SCALE ACCORDINGLY

CDM Smith
111 Academy Way, Suite 150
Irvine, California 92617
Tel: (949) 752-5452

CAMBRIA EMERGENCY WATER SUPPLY PROJECT
CAMBRIA COMMUNITY SERVICE DISTRICT

AWTP STRUCTURAL DETAILS

PROJECT NO. 138760-104133
FILE NAME: S-02.dwg
SHEET NO.
S-02

NOT FOR CONSTRUCTION

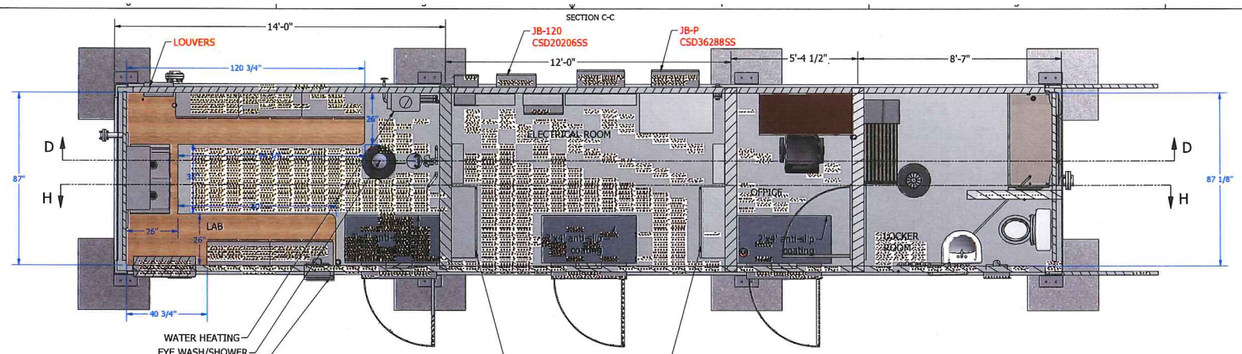

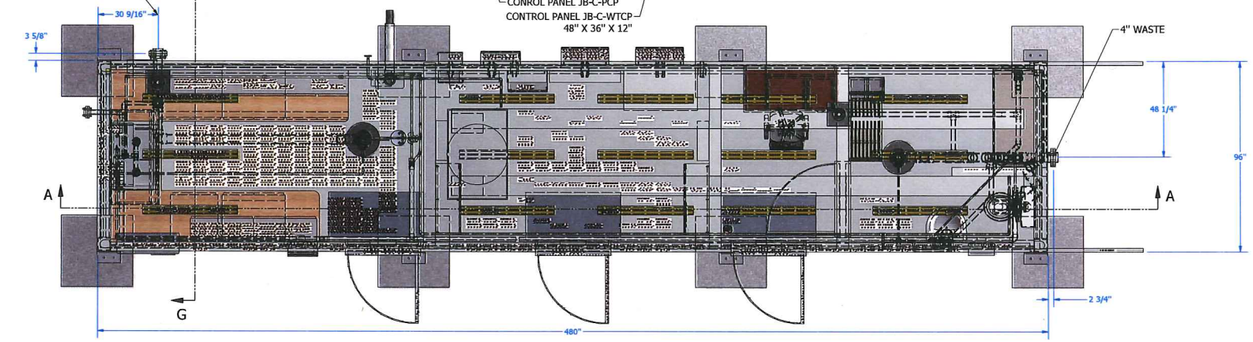

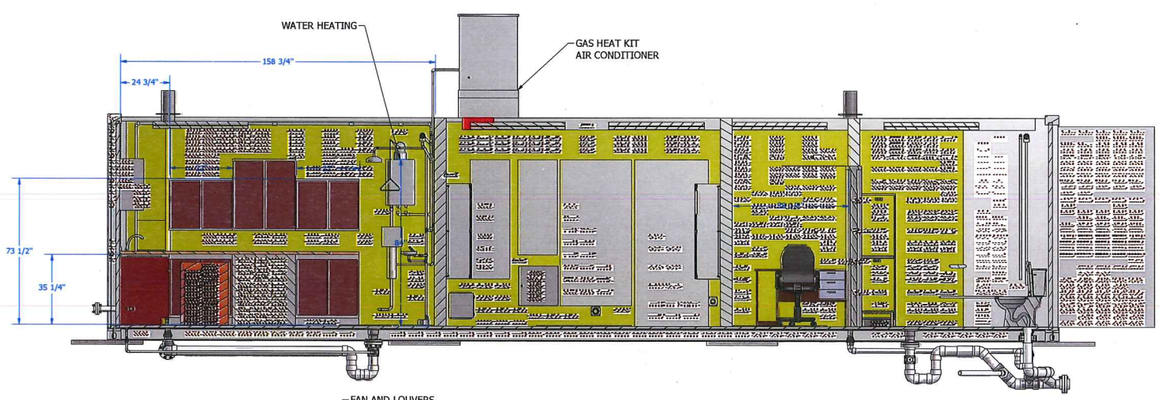

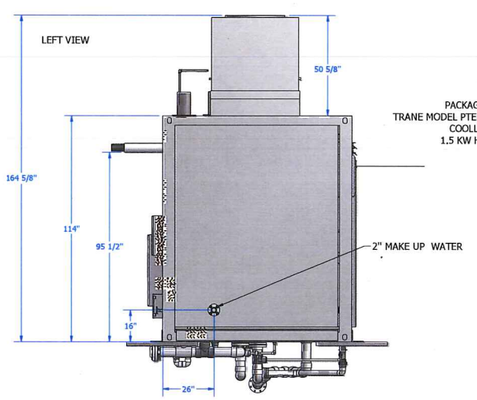

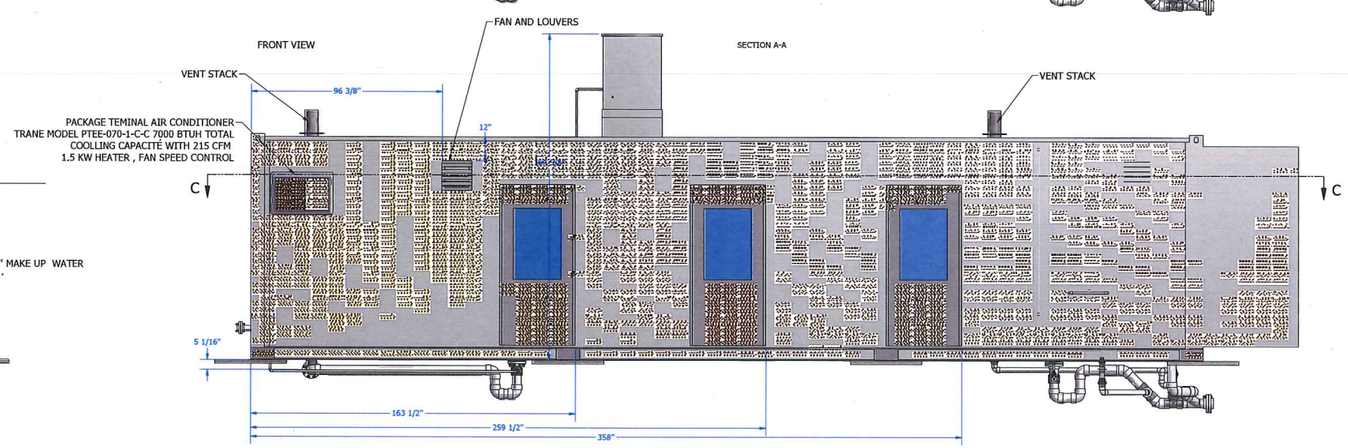

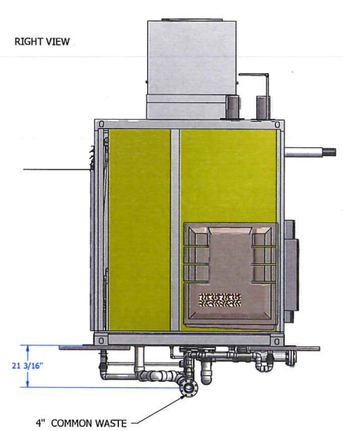

APPROXIMATE WEIGHT
SHIPPING WEIGHT = 14 250 LBS

DRAWING REVISION				

h2o innovation

SPENCERVILLE
PRELIMINARY LAYOUT
OPERATION BLDG

PRELIMINARY LAYOUT

H.G.	2012-10-03	P12069-D06-0008-01.04	02

M-03-UF GENERAL ARRANGEMENT-EY-060914-V001

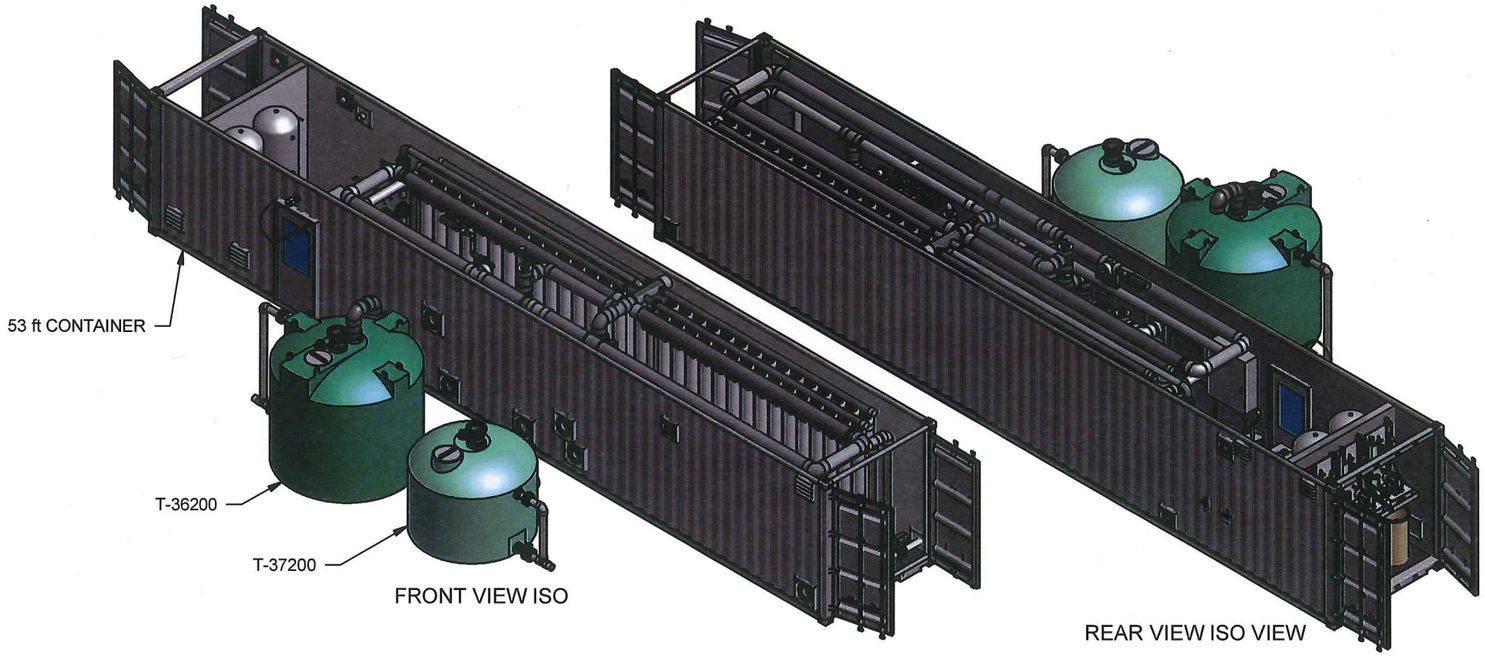

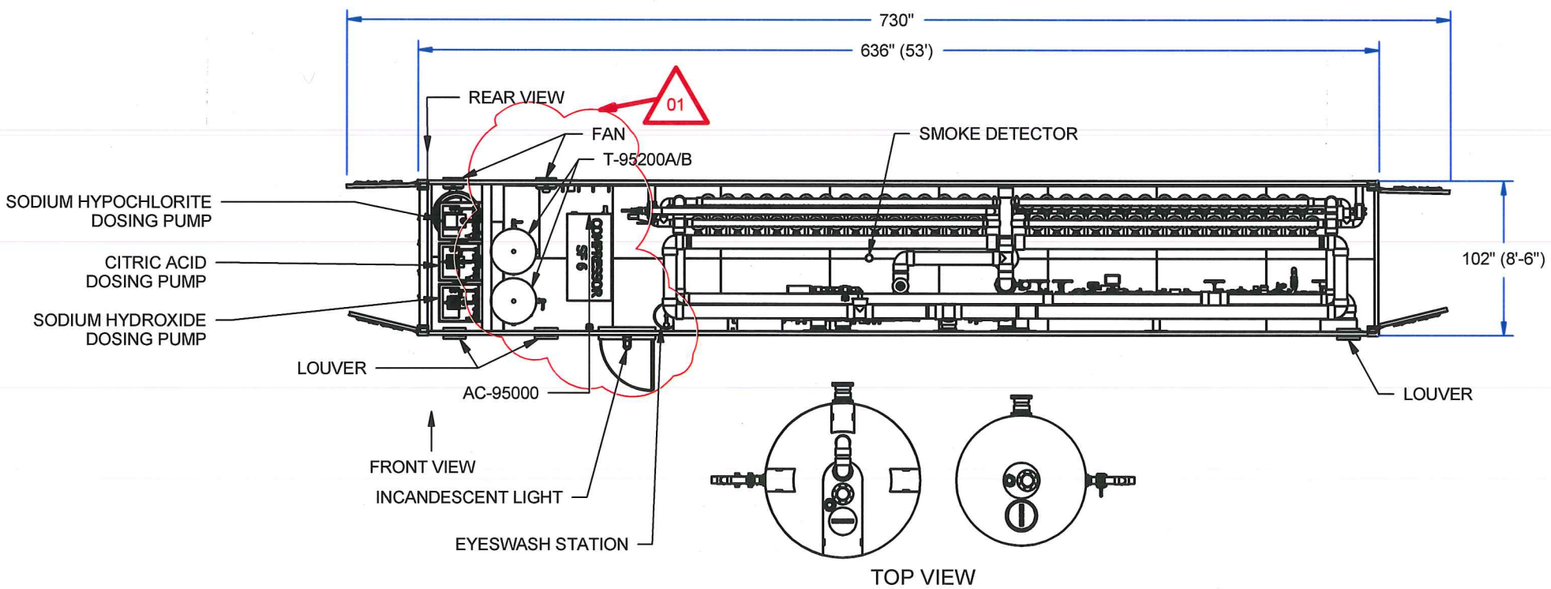

NOTES:

1. REFERENCE P&ID #P14761-C01-0001.
2. ALL WELDING TO CONFORM TO: AWS D1.1.
3. NO VERTICAL DOWN WELDS ARE ALLOWED UNLESS CERTIFIED PER AWS D1.1.
4. STITCH WELDS NOT ALLOWED UNLESS APPROVED BY H_2O INNOVATION.
5. WELDER CERTIFICATION FOR ALL WELDERS MUST BE PROVIDED TO H_2O INNOVATION.
6. BOLTS AND NUTS ARE STAINLESS STEEL TYPE 18-8 SS. WASHERS AND LOCK WASHERS ARE STAINLESS STEEL TYPE 18-8 SS. DIMENSIONS PER ASME B18.2.1. MECHANICAL PROPERTIES PER CONDITION CW OF ASTM F593. THREADS PER ANSI B1.1 CLASS 2A.
7. ALL STAINLESS STEEL TO BE PASSIVATED TO ASTM 380-06. TEST REPORT REQUIRED.
8. SAND BLAST TO SSPC-SSP6 FINISH, ACCEPTABLE FOR POWDER COAT OR PAINTING.
9. APPLY ONE (1) COAT, WITH MINIMUM DRY FILM THICKNESS (DFT) PER COAT OF 4 TO 7 MILS, OF POLYAMIDE EPOXY PRIMER, PITT-GUARD 95-245 SERIES FROM PPF OR APPROVED EQUAL.
10. APPLY TWO (2) COATS, WITH MINIMUM DRY FILM THICKNESS (DFT) PER COAT OF 2 TO 3 MILS, OF ACRYLIC ALIPHATIC URETHANE PAINT. PITTHANE ULTRA 95-812 SERIES FROM PPG OR APPROVED EQUAL. TO ACHIEVE FINAL 8 TO 13 MILS TOTAL DRY FILM THICKNESS.
11. ALL PVC PIPE TO BE SCHEDULE 80, GRAY, U.N.O. PIPE MATERIAL TO CONFORM TO ASTM D-1784. PHYSICAL DIMENSIONS, SCHEDULES, AND TOLERANCES TO CONFORM TO ASTM D-1785.
12. ALL PVC FITTINGS TO BE SCHEDULE 80, GRAY. SOCKET FITTINGS TO CONFORM TO ASTM D-2467.
13. ALL PVC FLANGED CONNECTIONS TO BE VAN STONE STYLE WITH GLASS FILLED PVC RING, CLASS 150, U.N.O. PVC MATERIAL TO CONFORM TO ASTM D-1784. BOLT HOLE PATTERN PER ANSI B16.5; ASTM D-4024.
14. PRIMER TO CONFORM TO ASTM-656. PVC SOLVENT CEMENT TO CONFORM TO ASTM D-2564.
15. ALL GASKETS TO CONFORM TO ASTM F-447.
16. TAP (½" NPT ONLY) INTO PVC / CPVC FITTING IS ALLOWED BUT ONLY IN SPECIFIC LOCATION WHERE NO ADEQUATE FITTING IS PROVIDED.
17. FINISHED ASSEMBLY (WITHOUT HFUF MODULES) MUST BE HYDROSTATICALLY TESTED TO 70 psi. TESTING MUST BE WITNESSED BY AN H2O INNOVATION REPRESENTATIVE.
18. FITTINGS PROTRUDING THROUGH THE ROOF WILL BE REMOVED FOR SHIPPING TO BE SITE INSTALLED.
19. APPROXIMATE WEIGHT: 82,061 LBS.

TOTAL QUANTITY REQUIRED FOR THE PROJECT:	1

NOTE:
THE INFORMATION, SPECIFICATIONS AND DATA SHOWN ON THIS PRINT ARE FURNISHED BY AND ARE TO REMAIN THE PROPERTY OF H_2O INNOVATION.

THE PURPOSE OF THIS DOCUMENT IS TO FACILITATE THE INSTALLATION, MAINTENANCE AND OPERATION OF THE EQUIPMENT REPRESENTED BY SAID PRINT. NO OTHER USE OF THIS DOCUMENT SHALL BE MADE WITHOUT EXPRESS WRITTEN CONSENT FROM H_2O INNOVATION.

DRAWING REVISION

REV	DATE (YYYY-MM-DD)	REVISION DESCRIPTION	DRAWN	CHKD	ENG	APPVD
01	2014-02-21	REVISED PER COMMENTS	Y.D.	B.K.	R.G.	R.G.
00	2014-02-03	PRELIMINARY	Y.D.	B.K.	R.G.	R.G.

h2o innovation
knowledge to share.du savoir à partager

UNLESS NOTED OTHERWISE
INTERPRETATION: ANSI Y14.5
TOLERANCES
FRACTIONS: ±1/4"
DECIMALS 0.X: ±0.030
0.XX: ±0.015
ANGLES: ±0.5°
HOLE SIZES: ±1/4"
HOLE CENTERS: ±1/4"
DO NOT SCALE PRINTS

WEST BASIN MUNICIPAL WATER DISTRICT, CA.

CONTAINERIZED WATER TREATMENT SYSTEM

TITLE:
LAYOUT
GENERAL ARRANGMENT DRAWING

SCALE:	DRAWING NUMBER:	REVISION
N/A	P14761-B01-0001 SHEET: 1 OF 5	01

TOP VIEW
NANOFILTER BLDG NO.1
PRELIMINARY DRAWING

APPROXIMATE WEIGHTS
SHIPPING WEIGHT = 24 600 LBS

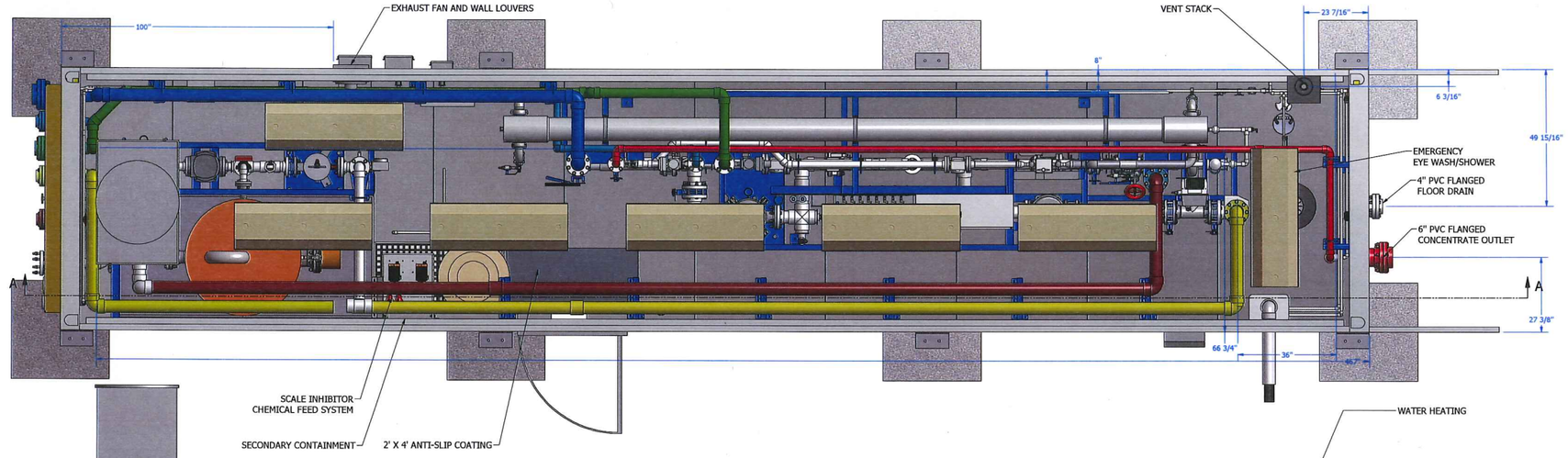

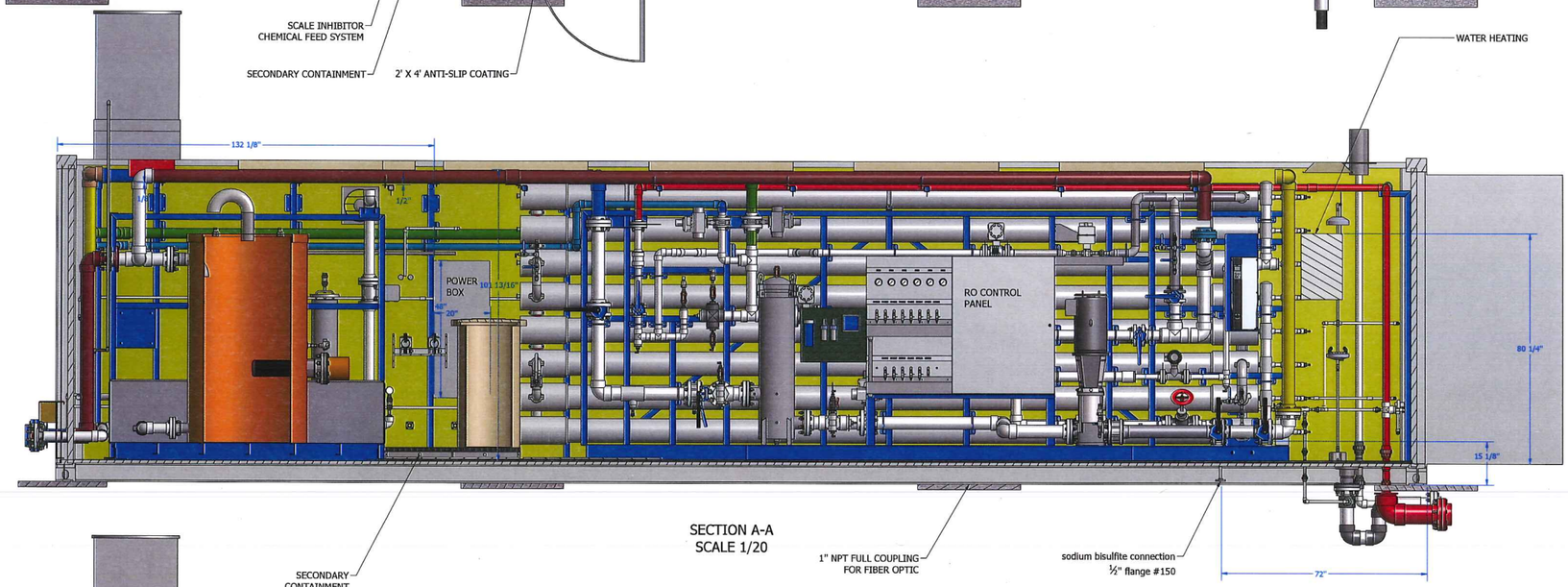

SECTION A-A
SCALE 1/20

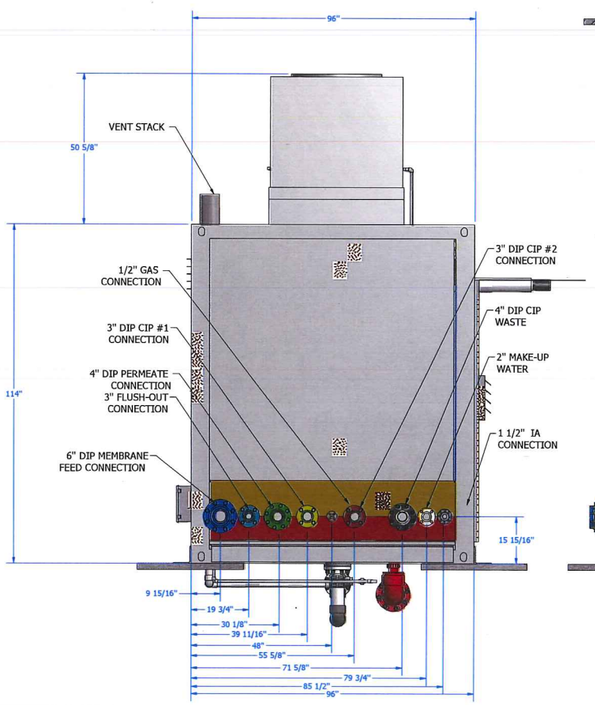

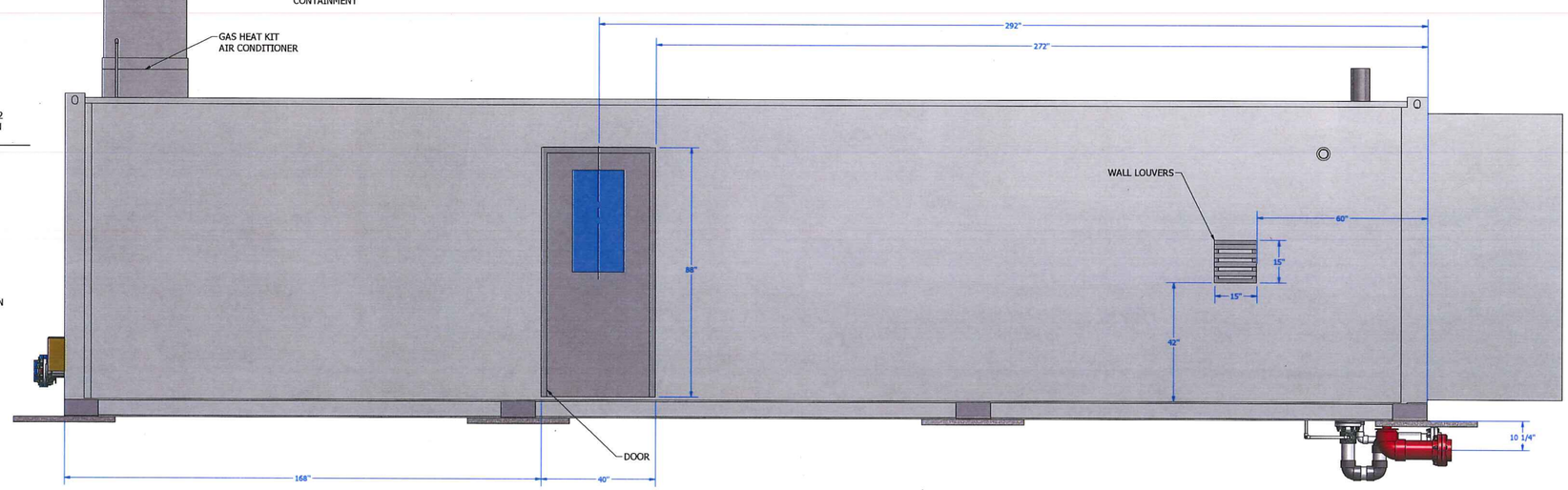

NOTE: THIS DRAWING IS THE PROPERTY OF H2O INNOVATION (2000) INC. AND MUST BE RETURNED UPON REQUEST. ANY REPRODUCTION OR DISTRIBUTION WITHOUT WRITTEN PERMISSION IS PROHIBITED.	DRAWING REVISION REVISIONS DATE	h2o innovation	SPENCERVILLE PRELIMINARY INLET/OUTLET NANOFILTER BLDG NO.01	DRAWN: M.B. 2012-05-24	P12069-D06-0500-01 08

TOP VIEW
NANOFILTER BLDG NO.02
PRELIMINARY DRAWNG

APPROXIMATE WEIGHTS
SHIPPING WEIGHT 21 385 LBS

TOP VIEW

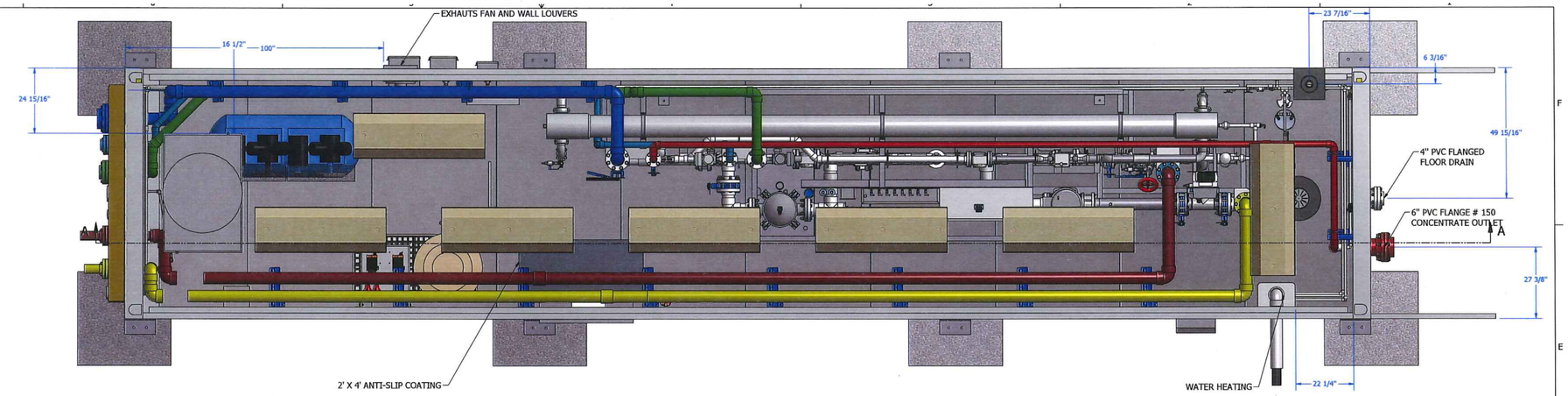

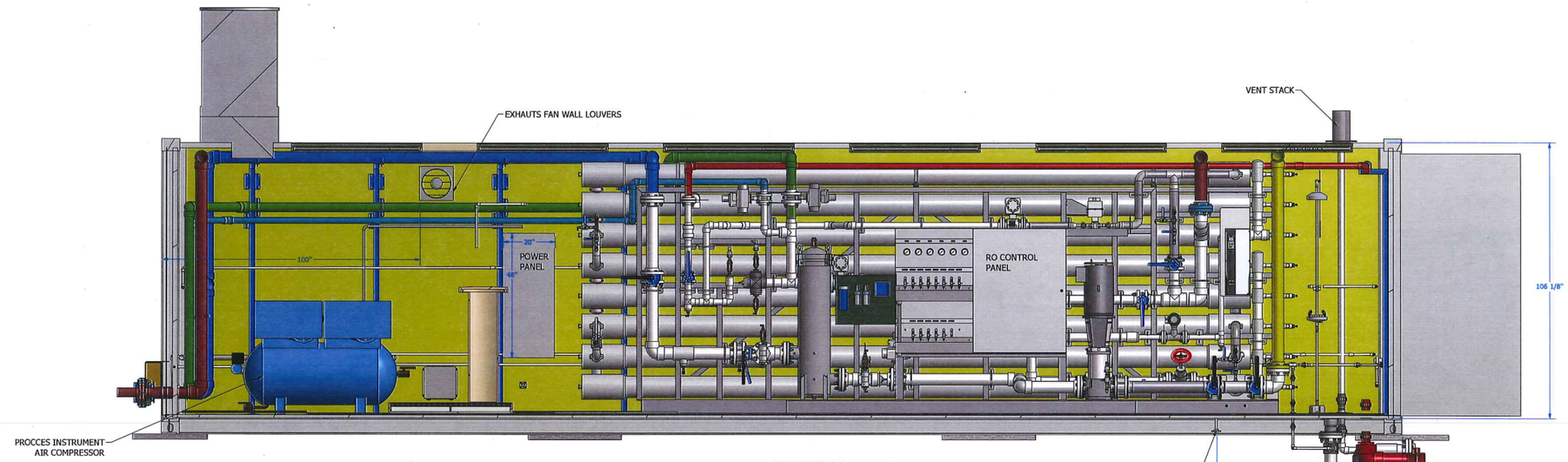

SECTION A-A
SCALE 1/20

FRONT VIEW

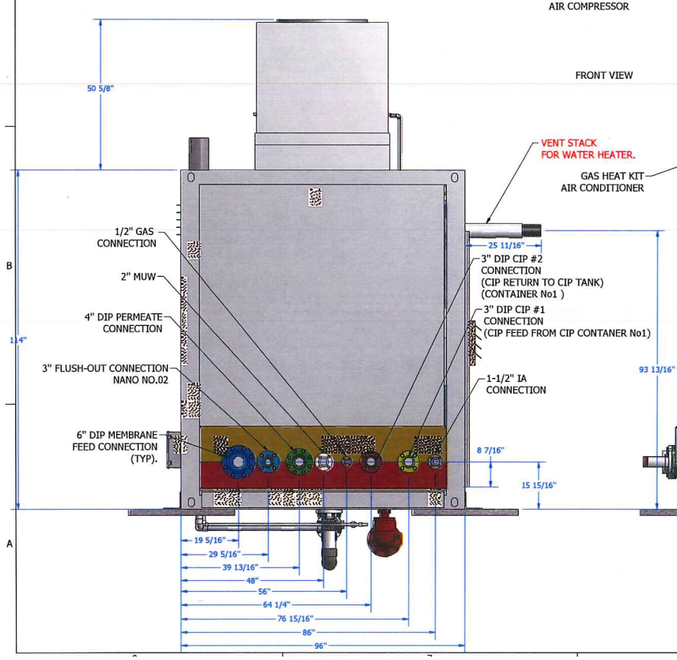

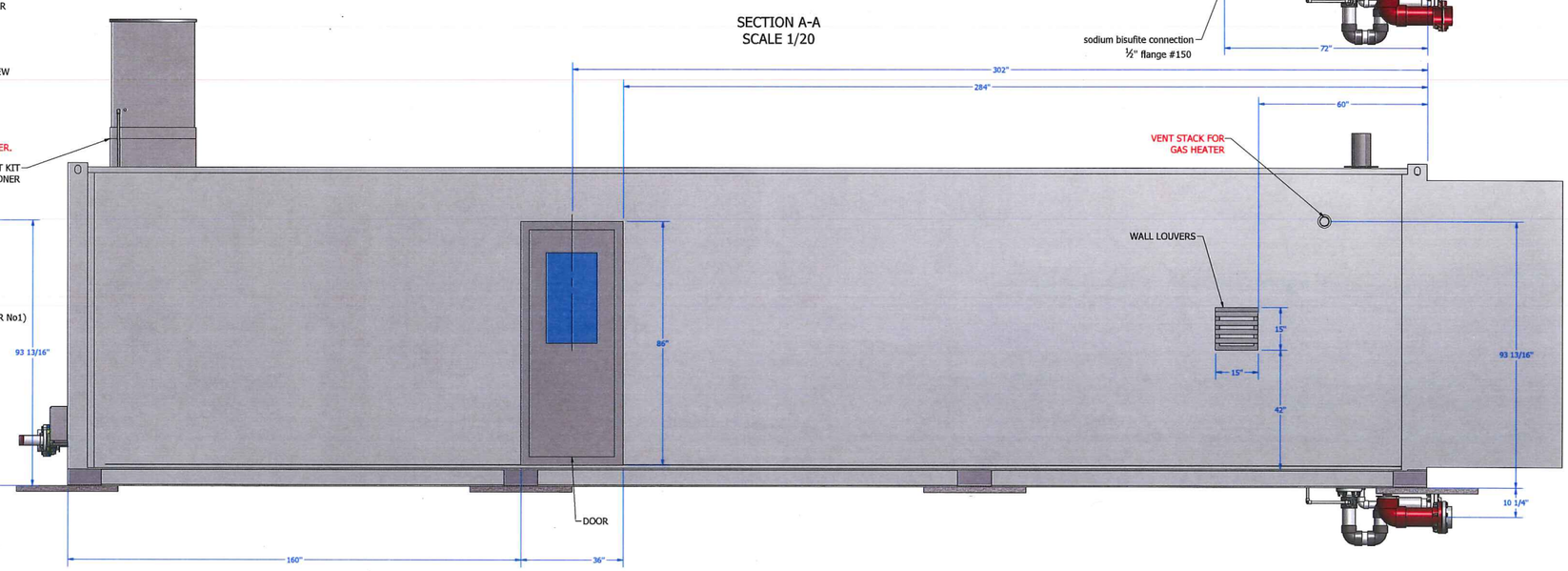

DRAWING REVISION	h2o innovation	SPENCERVILLE PRELIMINARY INLET/OUTLET NANOFILTER BLDG NO.2	P12069-D06-0600-01 07

M-07-UV GENERAL ARRANGEMENT-EY-060914-V001

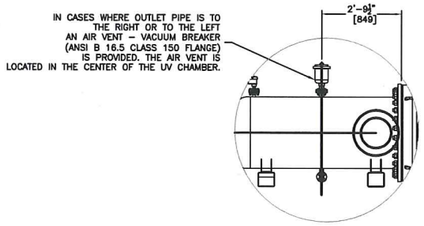

VENT
SCALE: NOT TO SCALE

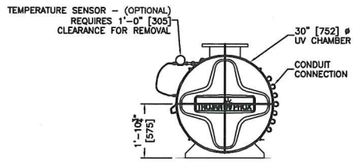

OUTLET END VIEW
SCALE: NOT TO SCALE

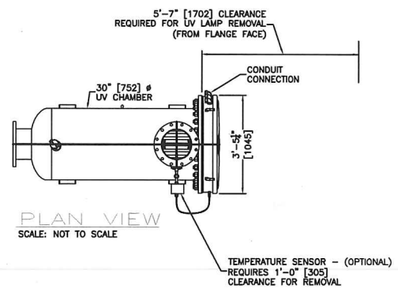

PLAN VIEW
SCALE: NOT TO SCALE

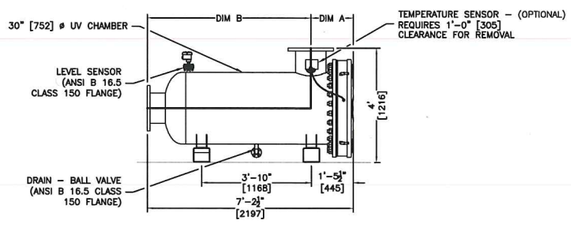

FRONT VIEW
SCALE: NOT TO SCALE

NOTES:

: MAXIMUM OPERATING PRESSURE TO BE 65 psi [4.5 BAR].
: INTERCONNECTING CABLE LENGTH TO BE 12 FT. [3658mm] FROM CONDUIT CONNECTOR ON UV CHAMBER END CAP TO CONDUIT CONNECTOR ON PDC.
: INLET/OUTLET GASKETS AND HARDWARE TO BE SUPPLIED BY CUSTOMER.
: INLET/OUTLET AWWA C207 CLASS D FLANGE.
: HEAT EXCHANGER OR ROOF FANS ARE AVAILABLE METHODS FOR COOLING ON PDC. HEAT EXCHANGER SHOWN FOR CLARITY.
: 72AL75 CHAMBER WEIGHT DRY 2100 lbs. [953 kg.] / WET 3700 lbs. [1678 kg.]
: PDC WEIGHT 800 lbs [362 kg.]
: UV CHAMBER MATERIAL TO BE 316 STAINLESS STEEL.
:: POWER DISTRIBUTION CENTER TO BE PAINTED MILD STEEL (STANDARD) 304 SST (OPTIONAL).
; SCC MATERIAL TO BE MILD STEEL (STANDARD) OR 304 SST (OPTIONAL) OR 316L SST (OPTIONAL).
: INLET AND OUTLET PIPES CAN BE FROM LEFT OR RIGHT ORIENTATIONS. TOP AND BOTTOM PIPE ORIENTATIONS ARE SHOWN FOR CLARITY ONLY.
: SCC TO PDC WIRING MAXIMUM DISTANCE OF 1000 ft. [304.8m] REQUIRING A FIBER OPTIC CABLING – ALL OTHER WIRING HAS A MAXIMUM DISTANCE OF 300 ft. [91.4m].
* INDICATES DIMENSIONS ARE SUBJECT TO CHANGE BASED ON PROJECT SPECIFIC REQUIREMENTS.

INLET / OUTLET PIPE SIZE (SS)	DIM A	DIM B
8	1'–4" [402]	5'–11" [1805]
12	1'–6" [454]	5'–9" [1753]
16	1'–7½" [496]	5'–7½" [1711]
20	1'–9½" [546]	5'–5½" [1660]

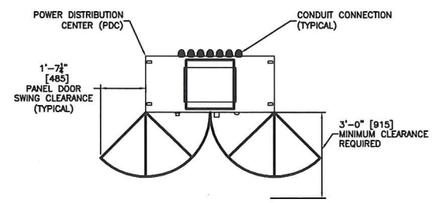

PLAN VIEW OF PDC
SCALE: NOT TO SCALE

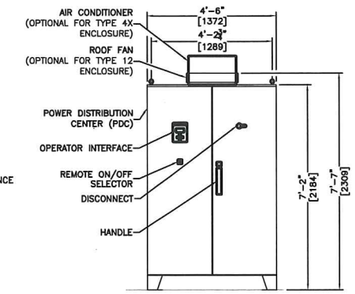

FRONT VIEW OF PDC
SCALE: NOT TO SCALE

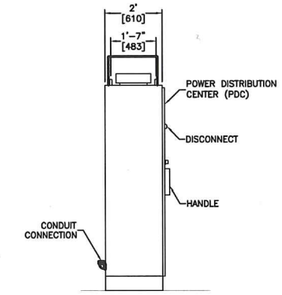

LEFT VIEW OF PDC
SCALE: NOT TO SCALE

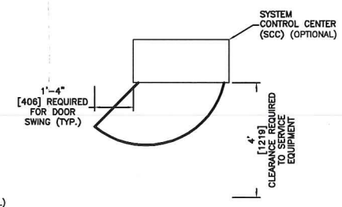

PLAN VIEW OF SCC
SCALE: NOT TO SCALE

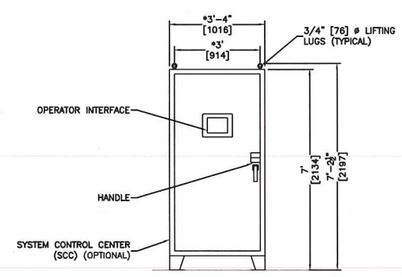

FRONT VIEW OF SCC
SCALE: NOT TO SCALE

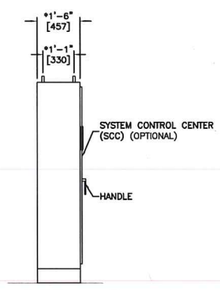

LEFT VIEW OF SCC
SCALE: NOT TO SCALE

TROJANUV

CONFIDENTIALITY NOTICE
Copyright 2012 by Trojan Technologies. All rights reserved. No part of this document may be reproduced, stored in a retrieval system, or transmitted in any form, without the written permission of Trojan Technologies.

DESCRIPTION: STD, TROJANUVPHOX 72AL75 SYSTEM – NON WIPING		STANDARD DRAWING NO. PH0007
DRAWN BY : CAR/CMS/MVW	DATE : 12AU28	REFERENCE NO. N/A
CHECKED BY : SAH	DATE : 12DE17	
APPROVED BY : SLO	DATE : 12DE18	DWG NO. D01 / REV. C
SCALE (11x17) : NOT TO SCALE	LOG NUMBER : N/A	

M-08-CHEMICAL SYSTEM GENERAL ARRANGEMENT-HH-060914-V001

NO CHEMICAL DRUMS WILL BE STORED INSIDE OF THE CONTAINER.

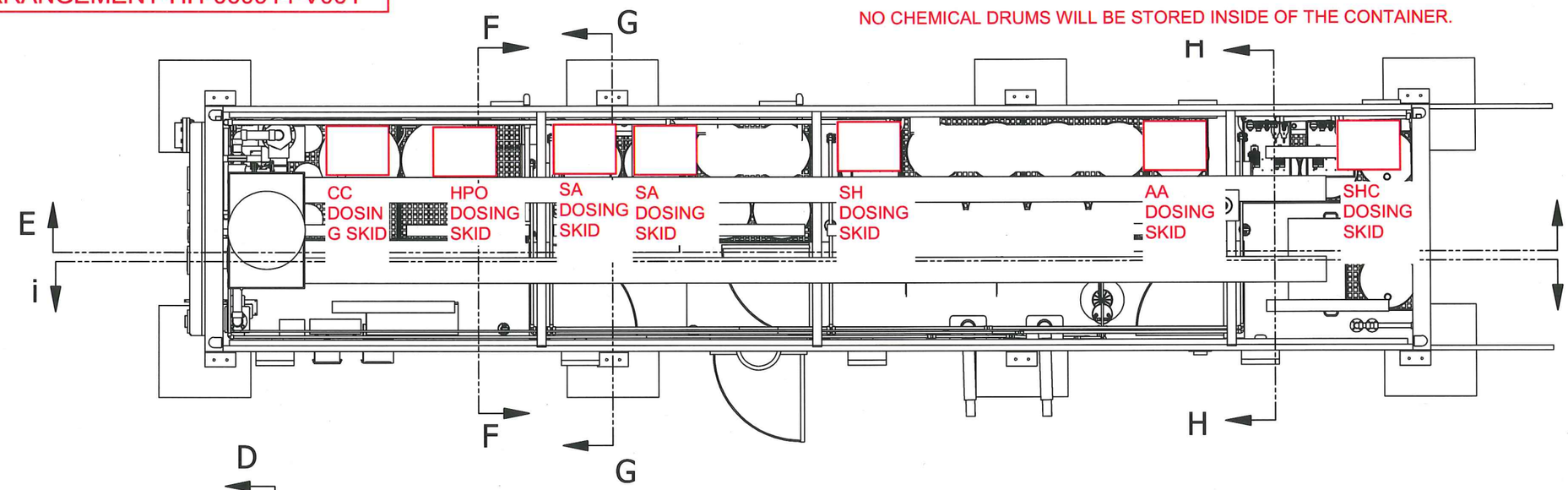

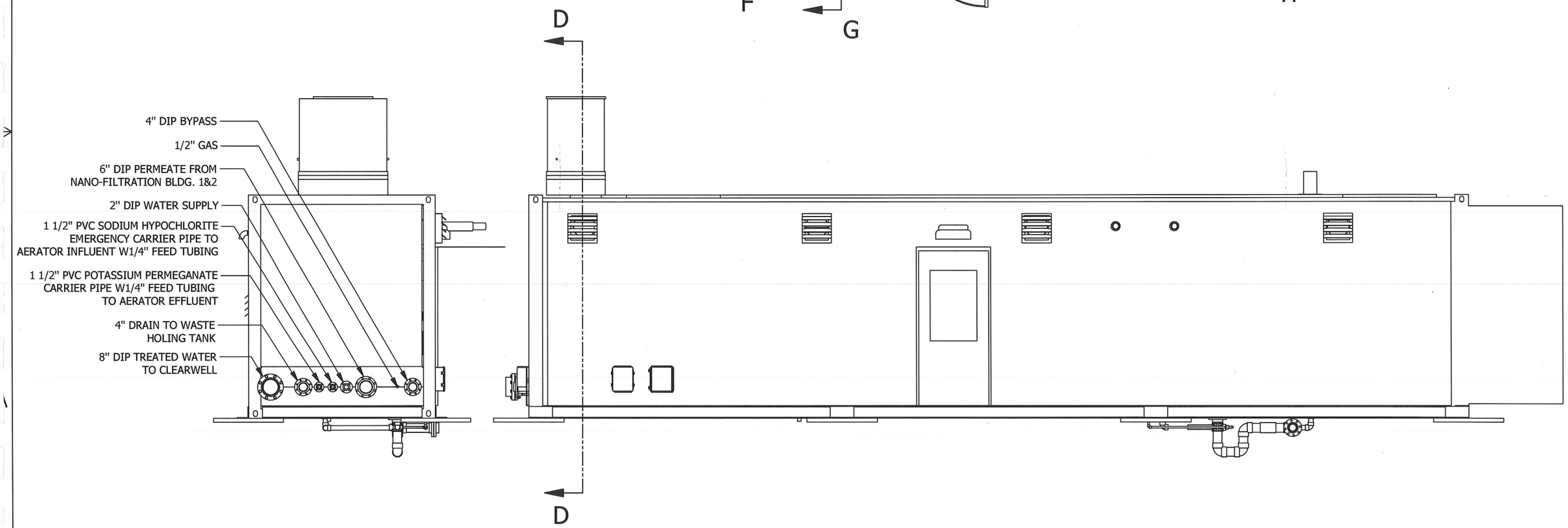

NOTE:
THE INFORMATION, SPECIFICATIONS AND DATA SHOWN ON THIS PRINT ARE FURNISHED BY AND ARE TO REMAIN THE PROPERTY OF H_2O INNOVATION.

THE PURPOSE OF THIS DOCUMENT IS TO FACILITATE THE INSTALLATION, MAINTENANCE AND OPERATION OF THE EQUIPMENT REPRESENTED BY SAID PRINT. NO OTHER USE OF THIS DOCUMENT SHALL BE MADE WITHOUT EXPRESS WRITTEN CONSENT FROM H_2O INNOVATION.

DRAWING REVISION

REV	DATE	REVISION DESCRIPTION	DRAWN	CHKD	ENG	APPVD

h2o innovation

TITLE: CHEMICAL SYSTEM GA (CONTAINER #6)

FILE:	pid
DATE:	2012-10-26
SHEET:	2 OF 4
SCALE:	SCALE

DRAWN BY	CHECKED	DRAWING NUMBER	REVISION
Y.Dube	M.B.	M-08	07
ENGINEER: M.B.	APPROVED		

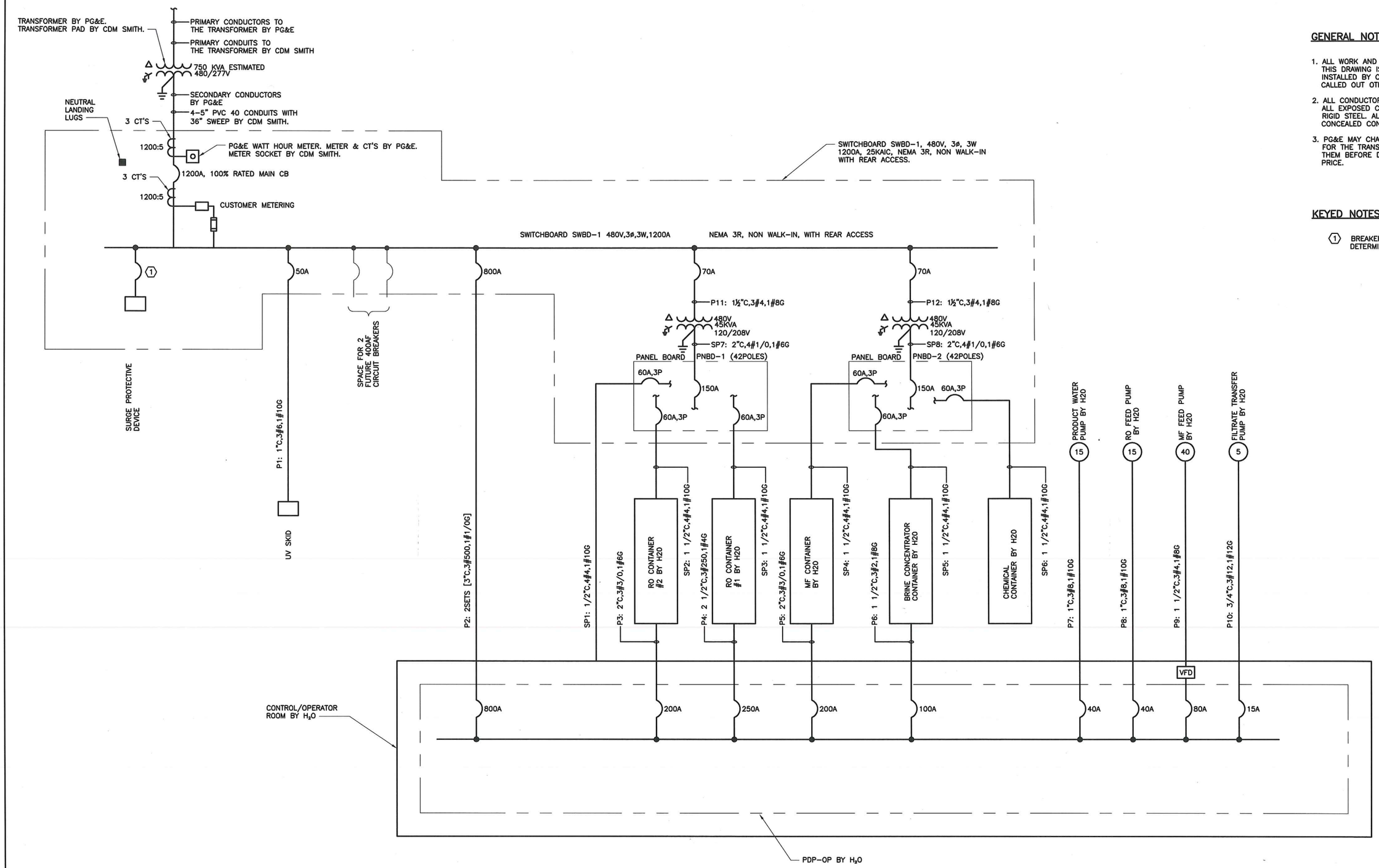

GENERAL NOTES:

1. ALL WORK AND EQUIPMENT SHOWN ON THIS DRAWING IS PURCHASED AND INSTALLED BY CDM SMITH UNLESS CALLED OUT OTHERWISE.
2. ALL CONDUCTOR IS COPPER XHHW-2 ALL EXPOSED CONDUIT IS GALVANIZED RIGID STEEL. ALL BURIED OR CONCEALED CONDUIT IS PVC 40.
3. PG&E MAY CHARGE UP-FRONT COSTS FOR THE TRANSFORMER. CHECK WITH THEM BEFORE DETERMINING FINAL BID PRICE.

KEYED NOTES:

1. BREAKER AMPERAGE SHALL BE DETERMINED BY THE MFR

REV. NO.	DATE	DRWN	CHKD	REMARKS

DESIGNED BY: K.RAY
DRAWN BY: B.J.FRANSEN
SHEET CHK'D BY: –
CROSS CHK'D BY: –
APPROVED BY: –
DATE: JUNE, 2014

WARNING
0 1/2" 1"
IF THIS BAR SCALE DOES NOT MEASURE 1" THIS DWG HAS BEEN REDUCED SCALE ACCORDINGLY

CDM Smith
111 Academy Way, Suite 150
Irvine, California 92617
Tel: (949) 752-5452

CAMBRIA EMERGENCY WATER SUPPLY PROJECT
CAMBRIA COMMUNITY SERVICE DISTRICT

ELECTRICAL SINGLE-LINE DIAGRAM

PROJECT NO. 138760-104133
FILE NAME:
SHEET NO. E-03

NOT FOR CONSTRUCTION

©2014 CDM SMITH ALL RIGHTS RESERVED.
REUSE OF DOCUMENTS: THESE DOCUMENTS AND DESIGNS PROVIDED BY PROFESSIONAL SERVICE, INCORPORATED HEREIN, ARE THE PROPERTY OF CDM SMITH AND ARE NOT TO BE USED, IN WHOLE OR PART, FOR ANY OTHER PROJECT WITHOUT THE WRITTEN AUTHORIZATION OF CDM SMITH.

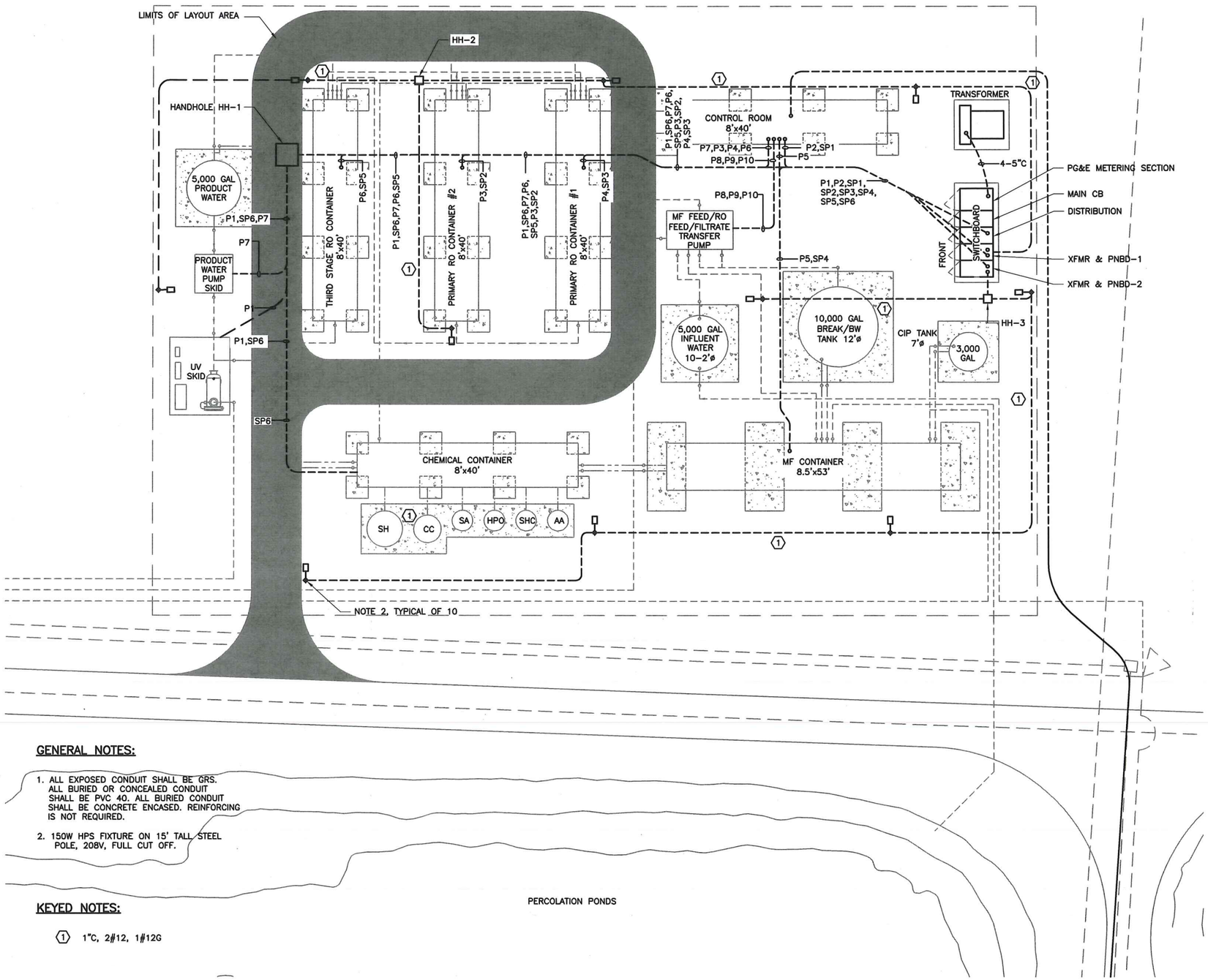

LEGEND

- CONCEALED OR BURIED CONDUIT
- EXPOSED CONDUIT

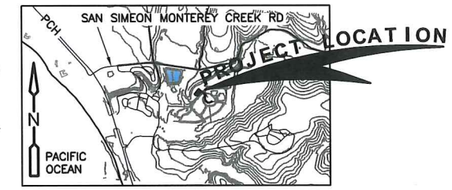

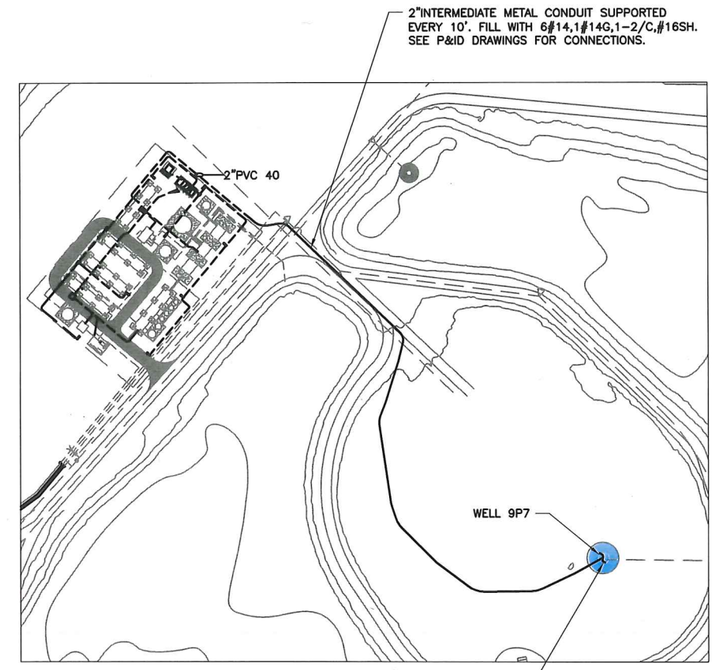

DEMO THE EXISTING WELL PUMP STARTER. PURCHASE & INSTALL A NEW SIZE 3 FVNR COMBINATION STARTER NEMA 3R CONSTRUCTION. STARTER SHALL HAVE AN HOA SWITCH WITH A DRY AUTO CONTACT FOR CONNECTION TO THE PLC.

1" = 60'
30 0 60

GENERAL NOTES:

1. ALL EXPOSED CONDUIT SHALL BE GRS. ALL BURIED OR CONCEALED CONDUIT SHALL BE PVC 40. ALL BURIED CONDUIT SHALL BE CONCRETE ENCASED. REINFORCING IS NOT REQUIRED.
2. 150W HPS FIXTURE ON 15' TALL STEEL POLE, 208V, FULL CUT OFF.

KEYED NOTES:

(1) 1"C, 2#12, 1#12G

N

1" = 10'
5 0 10

REV. NO.	DATE	DRWN	CHKD	REMARKS

DESIGNED BY: K.RAY
DRAWN BY: B.J.FRANSEN
SHEET CHK'D BY: –
CROSS CHK'D BY: –
APPROVED BY: –
DATE: JUNE, 2014

WARNING
0 1/2" 1"
IF THIS BAR SCALE DOES NOT MEASURE 1" THIS DWG HAS BEEN REDUCED SCALE ACCORDINGLY

CDM Smith
111 Academy Way, Suite 150
Irvine, California 92617
Tel: (949) 752-5452

CAMBRIA EMERGENCY WATER SUPPLY PROJECT
CAMBRIA COMMUNITY SERVICE DISTRICT

ELECTRICAL POWER AND CONTROL PLAN

PROJECT NO. 138760-104133
FILE NAME:
SHEET NO. E-04

NOT FOR CONSTRUCTION

pw:\\docpwepp1:PW_XMI\138760\104133\04 Design Services NM_PDR\02 Civil\10 CADD\C-02.dwg
© 2014 CDM SMITH ALL RIGHTS RESERVED.
REUSE OF DOCUMENTS: THESE DOCUMENTS AND DESIGNS PROVIDED BY PROFESSIONAL SERVICE, INCORPORATED HEREIN, ARE THE PROPERTY OF CDM SMITH AND ARE NOT TO BE USED, IN WHOLE OR PART, FOR ANY OTHER PROJECT WITHOUT THE WRITTEN AUTHORIZATION OF CDM SMITH.

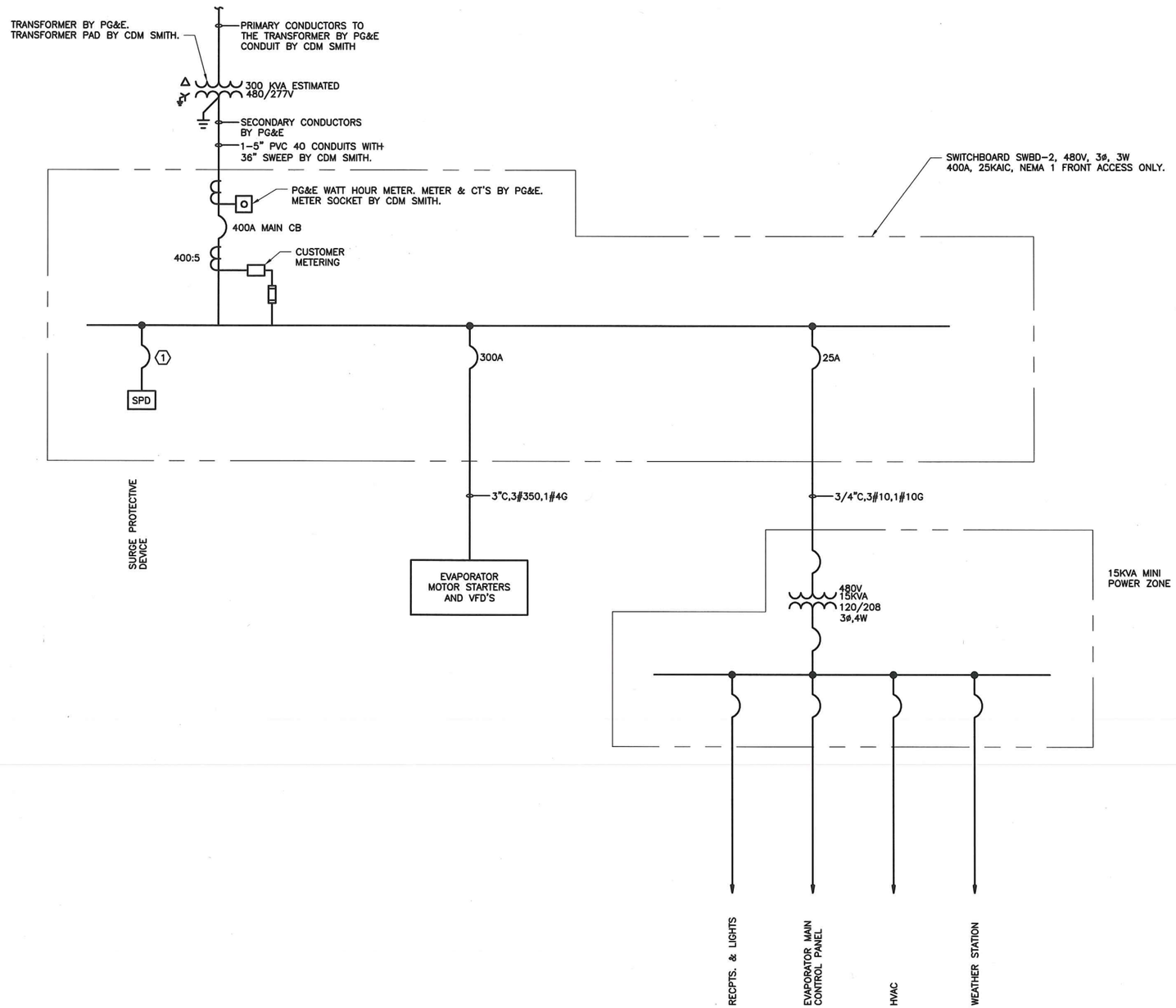

GENERAL NOTES:

1. ALL WORK AND EQUIPMENT SHOWN ON THIS DRAWING IS PURCHASED AND INSTALLED BY CDM SMITH UNLESS CALLED OUT OTHERWISE.
2. ALL CONDUCTOR IS COPPER XHHW-2 ALL EXPOSED CONDUIT IS GALVANIZED RIGID STEEL. ALL BURIED OR CONCEALED CONDUIT IS PVC 40.
3. PG&E MAY CHARGE UP-FRONT COSTS FOR THE TRANSFORMER. CHECK WITH THEM BEFORE DETERMINING FINAL BID PRICE.

KEYED NOTES:

1. BREAKER AMPERAGE SHALL BE DETERMINED BY THE MFR

© 2014 CDM SMITH ALL RIGHTS RESERVED.
REUSE OF DOCUMENTS: THESE DOCUMENTS AND DESIGNS PROVIDED BY PROFESSIONAL SERVICE, INCORPORATED HEREIN, ARE THE PROPERTY OF CDM SMITH AND ARE NOT TO BE USED, IN WHOLE OR PART, FOR ANY OTHER PROJECT WITHOUT THE WRITTEN AUTHORIZATION OF CDM SMITH.

REV. NO.	DATE	DRWN	CHKD	REMARKS

DESIGNED BY: K.RAY
DRAWN BY: B.J.FRANSEN
SHEET CHK'D BY: –
CROSS CHK'D BY: –
APPROVED BY: –
DATE: JUNE, 2014

WARNING
0 1/2" 1"
IF THIS BAR SCALE DOES NOT MEASURE 1" THIS DWG HAS BEEN REDUCED SCALE ACCORDINGLY

CDM Smith
111 Academy Way, Suite 150
Irvine, California 92617
Tel: (949) 752-5452

CAMBRIA EMERGENCY WATER SUPPLY PROJECT
CAMBRIA COMMUNITY SERVICE DISTRICT

ELECTRICAL
EVAPORATORS SINGLE-LINE DIAGRAM

PROJECT NO. 138760-104133
FILE NAME:
SHEET NO.
E-05

NOT FOR CONSTRUCTION

TYPICAL PIPE TAG NUMBERS & DESIGNATION

6"–RW–DI

- FLOW DIRECTION
- PIPE MATERIALS (SEE D2–003)
- SERVICE (SEE D2–003)
- SIZE

PIPE LINE SYMBOLS

- PIPE UNION
- FLEXIBLE BELLOWS TYPE COUPLING
- FLEXIBLE COUPLING (GENERAL SYMBOL)
- QUICK CONNECT TYPE COUPLING
- HOSE CONNECTION
- Y–STRAINER
- REDUCER/ENLARGER
- BLIND FLANGE
- CONTINUED PIPE
- DIAPHRAGM SEAL
- OPEN EQUIPMENT DRAIN
- DIFFUSER
- BASKET STRAINER
- FILTER
- PULSATION DAMPENER
- MAJOR PROCESS LINE
- MINOR PROCESS LINE
- DOUBLE WALLED PIPE
- E (S) — ELECTRIC (OR STEAM) TRACING
- XXX | XXX — PIPE MATERIAL TRANSITION

VALVE SYMBOLS

- GATE VALVE (GV)
- BUTTERFLY VALVE (BFV)
- BALL VALVE (BV)
- GLOBE VALVE (GLV)
- DIAPHRAGM VALVE (DV)
- SWING CHECK VALVE (CV)
- BALL CHECK VALVE (BCV)
- SOLENOID VALVE (SV)
- HAND VALVE (HV)
- PRESSURE REGULATING VALVE (PREGV)
- BACK PRESSURE REGULATING VALVE (BPV)
- DIFFERENTIAL PRESSURE REGULATING VALVE W/ EXTERIOR TAPS
- SELF–CONTAINED DIFFERENTIAL PRESSURE REGULATING VALVE
- SELF–CONTAINED DIFFERENTIAL PRESSURE REGULATING VALVE (SOLENOID OPERATED)
- PRESSURE RELIEF VALVE (PRV)
- VACUUM RELIEF VALVE (VRV)
- AIR/VAC VALVE
- BACK FLOW PREVENTER VALVE (BFPV)

TYPICAL EQUIPMENT TAG NUMBERS & DESIGNATION

DDD–1234

- LOOP NUMBER
- EQUIPMENT

LOOP RANGE:

1000–1099	SUPPLY WELL AND AWT INFLUENT TANK & PUMPS
2000–2099	UF SYSTEM
3000–3099	RO SYSTEM
4000–4099	UV SYSTEM
5000–5099	BRINE EVAPORATION SYSTEM

TYPICAL TAG NUMBERS & DESIGNATION

HS 1000 01 HOA

- INSTRUMENT TYPE SEE " INSTRUMENTATION FUNCTIONAL CODE" TABLE
- ADDITIONAL INSTRUMENTATION SEE " HAND SWITCH ABBREVIATION
- LOOP NUMBER
- UNIT NUMBER

HAND SWITCH ABBREVIATIONS

AO = AUTO/OFF
AM = AUTO/MANUAL
CM = COMPUTER/MANUAL
ES = EMERGENCY STOP
FR = FORWARD/REVERSE
FOR = FORWARD/OFF/REVERSE
FS = FAST/SLOW
FOS = FAST/OFF/SLOW
HOA = HAND/OFF/AUTO
LLS = LEAD/LAG/STANDBY
LOC = LOCAL/OFF/COMPUTER
LOR = LOCAL/OFF/REMOTE
LOS = LOCKOUT/STOP
LA = LOCAL/AUTO
L/R = LOCAL/REMOTE
OC = OPEN/CLOSE
OCA = OPEN/CLOSE/AUTO
OO = ON/OFF
OOA = ON/OFF/AUTO
OSC = OPEN/STOP/CLOSE
RSL = RAISE/STOP/LOWER
RST = RESET
SS = START/STOP
SOR = START/OFF/RESET

ELECTRICAL / AIR SOURCES

- UPS — UPS POWER VIA PCSS PROVIDED UPS DIRECT CONNECTION
- UPS — UPS POWER VIA PCSS PROVIDED UPS LIGHTING PANEL
- ES — PCSS SUPPLIED PANEL ELECTRICAL SOURCE
- ES — VENDOR SUPPLIED PANEL ELECTRICAL SOURCE
- ES — NON–PCSS SUPPLIED PANEL ELECTRICAL SOURCE
- IA — INSTRUMENT AIR SOURCE

NOTE 1: ALL POWER SOURCES ARE 120 VAC UNLESS OTHERWISE STATED ON THE DRAWINGS

NOTE 2: REFER TO UPS SPECIFICATIONS FOR POWER REQUIREMENTS OF PANEL

NOTE 3: REFER TO OTHER SPECIFICATION SECTIONS FOR POWER REQUIREMENTS OF INSTRUMENTS

ABBREVIATIONS AND LETTER SYMBOLS

AC	ALTERNATING CURRENT
DC	DIRECT CURRENT
HMI	HUMAN–MACHINE INTERFACE
PLC	PROGRAMMABLE LOGIC CONTROLLER

INSTRUMENT LINE SYMBOLS

- ELECTRICAL SIGNAL
- TELEPHONE SIGNAL
- ELECTROMAGNETIC OR SONIC SIGNAL (GUIDED)
- ELECTROMAGNETIC OR SONIC SIGNAL (UNGUIDED)
- PNEUMATIC SIGNAL
- CAPILLARY TUBE
- HYDRAULIC SUPPLY
- VENDOR SUPPLIED CABLE
- SOFTWARE I/O
- CAT–6 COMMUNICATION CABLE
- FIBER–OPTIC CABLE

GENERAL NOTES

1. THIS LEGEND APPLIES TO P&IDS ONLY AND MAY DIFFER FROM LEGENDS FOR OTHER SHEETS.
2. IN GENERAL THIS LEGEND SHEET AND THE P&IDS ARE BASED ON INTERNATIONAL SOCIETY OF AUTOMATION (ISA) STANDARDS FOR PRACTICES FOR INSTRUMENTATION. SOME MODIFICATIONS, ADDITIONS AND ALTERATIONS HAVE BEEN MADE AS REQUIRED TO ACCOMODATE PROJECT REQUIREMENTS.
3. SOME PROCESS ITEMS, SUCH AS EQUIPMENT ISOLATION VALVES, BYPASS LINES, ETC., WHICH ARE NOT CRITICAL FOR AN UNDERSTANDING OF THE INSTRUMENTATION FUNCTIONS ARE NOT SHOWN ON THE P&IDS.
4. SEE ELECTRICAL AND MECHANICAL SHEETS AND SPECIFICATIONS FOR ADDITIONAL CONTROL AND INTERLOCK REQUIREMENTS.
5. LIGHTER WEIGHT LINES, SHOWN AS ——— ,INDICATE EQUIPMENT, INSTRUMENTS OR PIPING THAT ARE EXISTING. WEIGHTED LINES, SHOWN AS ——— , OR HEAVIER ——— , INDICATE EQUIPMENT, INSTRUMENTS OR PIPING THAT ARE NEW.

GENERAL INSTRUMENT OR FUNCTION SYMBOLS

	LOCATION NORMALLY ACCESSIBLE TO OPERATOR	FIELD MOUNTED	LOCATION NORMALLY NOT ACCESSIBLE TO OPERATOR
PRIMARY LOCATION OR CONTROL PANEL			
SECONDARY LOCATION OR CONTROL PANEL			

- INSTRUMENTS SHARING COMMON HOUSING
- PILOT LIGHT

VALVE ACTUATORS

- HAND (MANUALLY) OPERATED
- DIAPHRAGM, SPRING OPPOSED
- DIAPHRAGM, PRESSURE–BALANCED
- M — ROTARY MOTOR. (SHOWN TYPICALLY WITH ELECTRIC SIGNAL. MAY BE HYDRAULIC OR PNEUMATIC)
- S — SOLENOID
- EH — ELECTROHYDRAULIC SOLENOID
- CYLINDER, SINGLE–ACTING, SPRING OPPOSED WITHOUT POSITIONER OR PILOT.
- CYLINDER, DOUBLE ACTING, WITHOUT POSITIONER OR PILOT
- EXAMPLE OF CYLINDER WITH POSITIONER
- SOLENOID VALVE, SIGNAL CONVERTER, etc. ANY CYLINDER THAT IS ASSEMBLED WITH A PILOT SO THAT ASSEMBLY IS ACTUATED BY ONE CONTROLLED INPUT. PILOT MAY BE POSITIONER,
- FLOAT ACTUATOR

PRIMARY ELEMENTS

- LE — FLOAT SWITCH
- LE — ULTRASONIC LEVEL SENSOR
- LE — CAPACITANCE LEVEL SENSOR
- PI — PRESSURE GAUGE
- DPI — DIFFERENTIAL PRESSURE GAUGE
- TI — TEMPERATURE GAUGE
- AE X — GENERAL ANALYZER
  - pH = pH
  - DO = DISSOLVED OXYGEN
  - H2S = HYDROGEN SULFIDE
  - CH4 = METHANE
  - O2 = OXYGEN
  - NH_4 = AMMONIA
  - NO_3 = NITRATE
- FE M — MAGNETIC FLOW METER
- FE 8 — TURBINE OR PROPELLER FLOW METER
- FE — ROTAMETER

I/O SIGNALS

MEASURED VARIABLE OR OUTPUT FUNCTION FROM "INSTRUMENTATION FUNCTIONAL CODE" TABLE.

- ANALOG INPUT (AI)
- ANALOG OUTPUT (AO)
- DIGITAL INPUT (DI) — X — BLANK = CLOSE ON ACTIVATION; O = OPEN ON ALARM
- DIGITAL OUTPUT (DO) — X — BLANK = MAINTAINED (ELECTRICALLY HELD); M = MOMENTARY; L = LATCHED
- THERMOCOUPLE INPUT — X — K=K–TYPE; J=J–TYPE; N=N–TYPE
- RTD INPUT

REV. NO.	DATE	DRWN	CHKD	REMARKS

DESIGNED BY: H.NGUYEN
DRAWN BY: J. ISIDORO
SHEET CHK'D BY: –
CROSS CHK'D BY: –
APPROVED BY: –
DATE: JUNE, 2014

WARNING
0 1/2" 1"
IF THIS BAR SCALE DOES NOT MEASURE 1" THIS DWG HAS BEEN REDUCED SCALE ACCORDINGLY

CDM Smith
111 Academy Way, Suite 150
Irvine, California 92617
Tel: (949) 752-5452

CAMBRIA EMERGENCY WATER SUPPLY PROJECT
CAMBRIA COMMUNITY SERVICE DISTRICT

PROCESS AND INSTRUMENTATION LEGEND, SYMBOLS, AND ABBREVIATIONS

PROJECT NO. XXXXX–XXXXXX
FILE NAME: I–1.DWG
SHEET NO. I-1

NOT FOR CONSTRUCTION

©2014 CDM SMITH. ALL RIGHTS RESERVED.
REUSE OF DOCUMENTS: THESE DOCUMENTS AND DESIGNS PROVIDED BY PROFESSIONAL SERVICE, INCORPORATED HEREIN, ARE THE PROPERTY OF CDM SMITH AND ARE NOT TO BE USED, IN WHOLE OR PART, FOR ANY OTHER PROJECT WITHOUT THE WRITTEN AUTHORIZATION OF CDM SMITH.

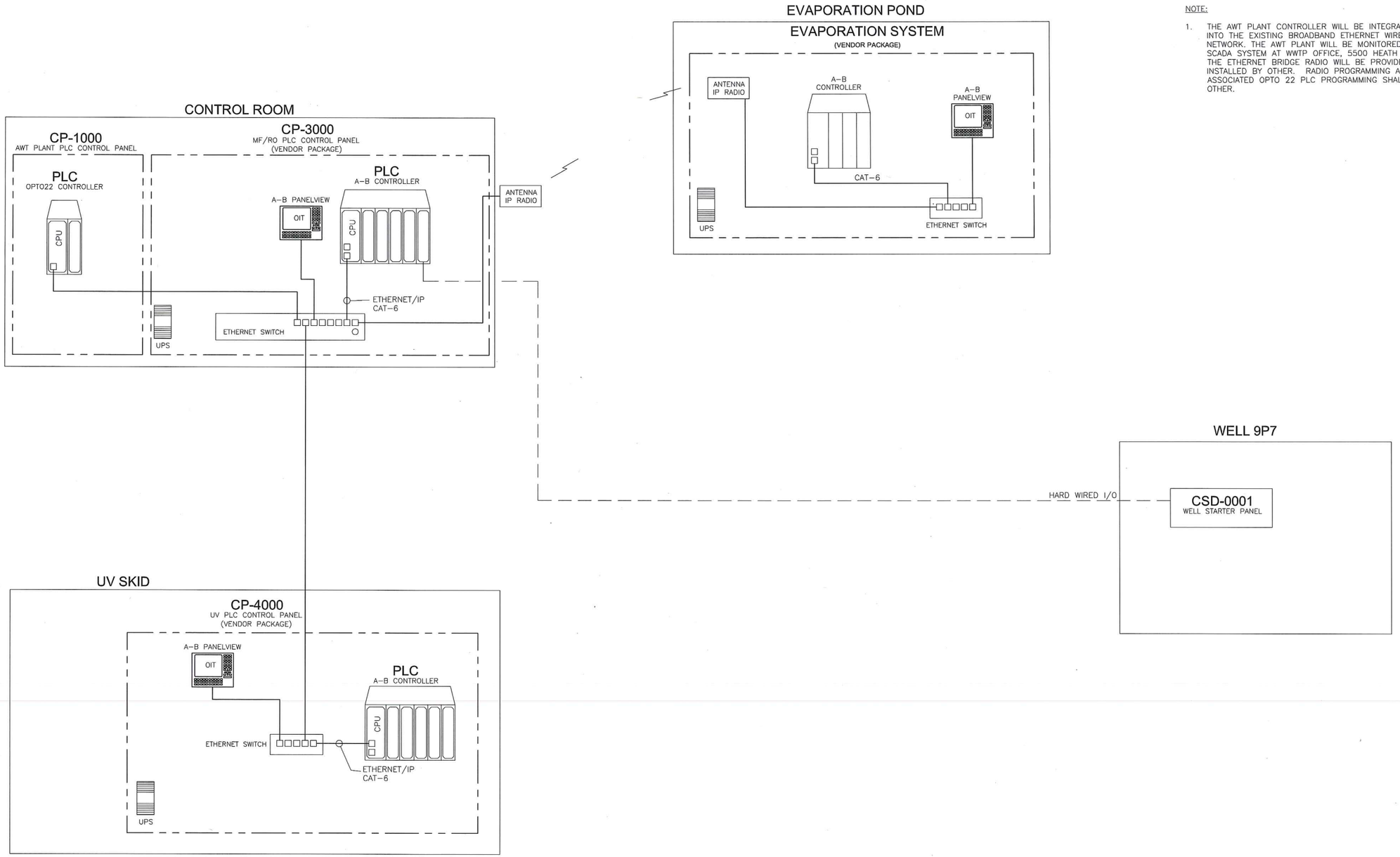

NOTE:

1. THE AWT PLANT CONTROLLER WILL BE INTEGRATED INTO THE EXISTING BROADBAND ETHERNET WIRELESS NETWORK. THE AWT PLANT WILL BE MONITORED BY SCADA SYSTEM AT WWTP OFFICE, 5500 HEATH LANE. THE ETHERNET BRIDGE RADIO WILL BE PROVIDED AND INSTALLED BY OTHER. RADIO PROGRAMMING AND ASSOCIATED OPTO 22 PLC PROGRAMMING SHALL BE BY OTHER.

©2014 CDM SMITH ALL RIGHTS RESERVED.
REUSE OF DOCUMENTS: THESE DOCUMENTS AND DESIGNS PROVIDED BY PROFESSIONAL SERVICE, INCORPORATED HEREIN, ARE THE PROPERTY OF CDM SMITH AND ARE NOT TO BE USED, IN WHOLE OR PART, FOR ANY OTHER PROJECT WITHOUT THE WRITTEN AUTHORIZATION OF CDM SMITH.

REV. NO.	DATE	DRWN	CHKD	REMARKS

DESIGNED BY: H.NGUYEN
DRAWN BY: J. ISIDORO
SHEET CHK'D BY: –
CROSS CHK'D BY: –
APPROVED BY: –
DATE: JUNE, 2014

WARNING
0 1/2" 1"
IF THIS BAR SCALE DOES NOT MEASURE 1" THIS DWG HAS BEEN REDUCED SCALE ACCORDINGLY

CDM Smith
111 Academy Way, Suite 150
Irvine, California 92617
Tel: (949) 752-5452

CAMBRIA EMERGENCY WATER SUPPLY PROJECT
CAMBRIA COMMUNITY SERVICE DISTRICT

PROCESS AND INSTRUMENTATION OVERALL SYSTEM ARCHITECTURE

PROJECT NO. 138760-104133
FILE NAME: I-2.DWG
SHEET NO.
I-2

NOT FOR CONSTRUCTION

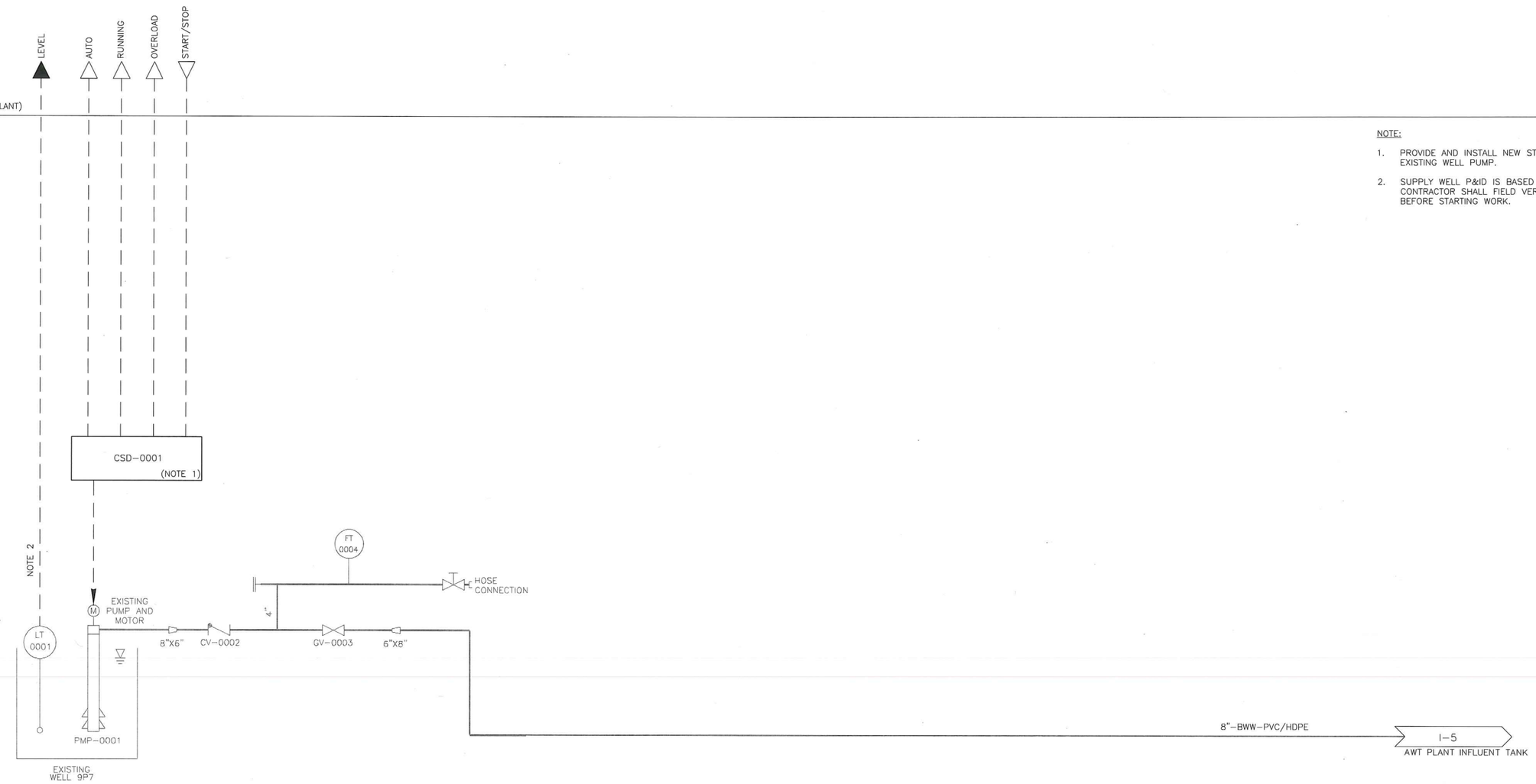

NOTE:

1. PROVIDE AND INSTALL NEW STARTER PANEL FOR THE EXISTING WELL PUMP.
2. SUPPLY WELL P&ID IS BASED ON FIELD PHOTOGRAPH. CONTRACTOR SHALL FIELD VERIFY INSTRUMENTS BEFORE STARTING WORK.

© 2014 CDM SMITH ALL RIGHTS RESERVED.
REUSE OF DOCUMENTS: THESE DOCUMENTS AND DESIGNS PROVIDED BY PROFESSIONAL SERVICE, INCORPORATED HEREIN, ARE THE PROPERTY OF CDM SMITH AND ARE NOT TO BE USED, IN WHOLE OR PART, FOR ANY OTHER PROJECT WITHOUT THE WRITTEN AUTHORIZATION OF CDM SMITH.

REV. NO.	DATE	DRWN	CHKD	REMARKS

DESIGNED BY: H.NGUYEN
DRAWN BY: J. ISIDORO
SHEET CHK'D BY: –
CROSS CHK'D BY: –
APPROVED BY: –
DATE: JUNE, 2014

WARNING
0 1/2" 1"
IF THIS BAR SCALE DOES NOT MEASURE 1" THIS DWG HAS BEEN REDUCED SCALE ACCORDINGLY

CDM Smith
111 Academy Way, Suite 150
Irvine, California 92617
Tel: (949) 752-5452

CAMBRIA EMERGENCY WATER SUPPLY PROJECT
CAMBRIA COMMUNITY SERVICE DISTRICT

PROCESS AND INSTRUMENTATION
SUPPLY WELL

PROJECT NO. 138760-104133
FILE NAME: I-3.DWG
SHEET NO.
I-3

NOT FOR CONSTRUCTION

NOTE:

1. THE SUBMERSIBLE PUMPS WILL BE ANCHORED AT FLOATING STRUCTURE

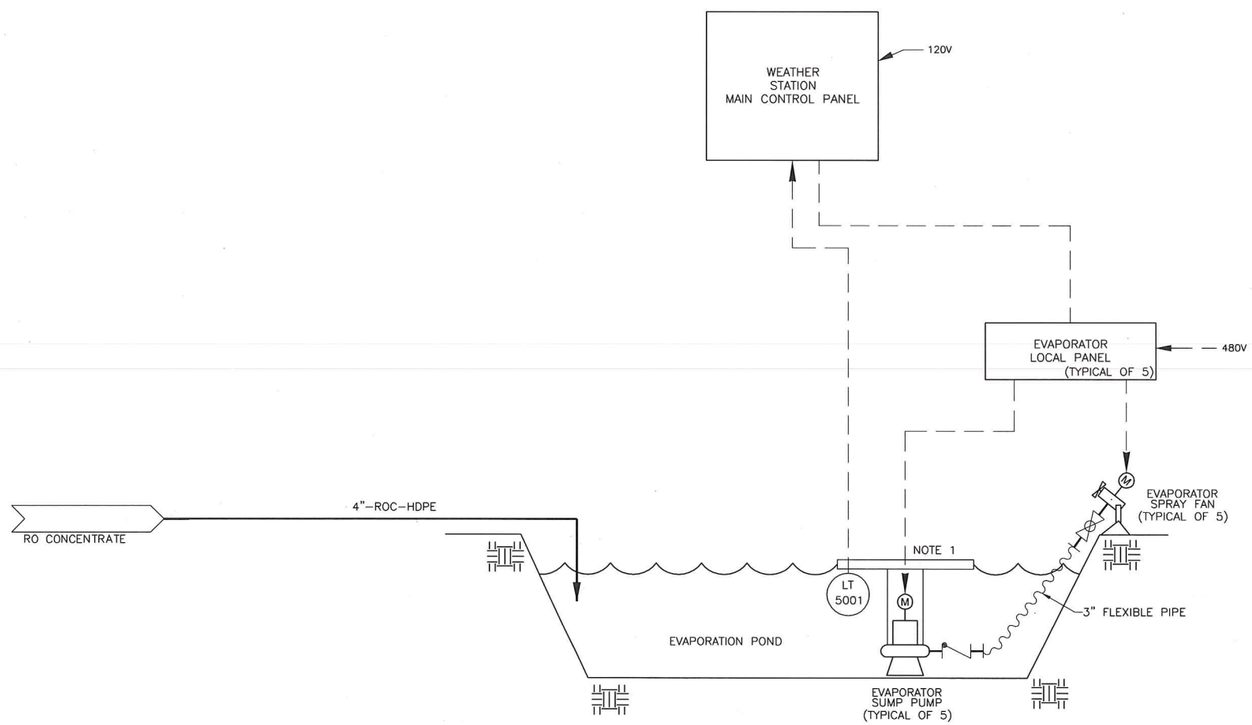

REV. NO.	DATE	DRWN	CHKD	REMARKS

DESIGNED BY: H.NGUYEN
DRAWN BY: J. ISIDORO
SHEET CHK'D BY: –
CROSS CHK'D BY: –
APPROVED BY: –
DATE: JUNE, 2014

WARNING
0 1/2" 1"
IF THIS BAR SCALE DOES NOT MEASURE 1" THIS DWG HAS BEEN REDUCED SCALE ACCORDINGLY

CDM Smith
111 Academy Way, Suite 150
Irvine, California 92617
Tel: (949) 752-5452

CAMBRIA EMERGENCY WATER SUPPLY PROJECT
CAMBRIA COMMUNITY SERVICE DISTRICT

PROCESS AND INSTRUMENTATION
BRINE EVAPORATION SYSTEM

PROJECT NO. XXXXX-XXXXXX
FILE NAME: I-4.DWG
SHEET NO.
I-4

NOT FOR CONSTRUCTION

© 2014 CDM SMITH ALL RIGHTS RESERVED.
REUSE OF DOCUMENTS: THESE DOCUMENTS AND DESIGNS PROVIDED BY PROFESSIONAL SERVICE, INCORPORATED HEREIN, ARE THE PROPERTY OF CDM SMITH AND ARE NOT TO BE USED, IN WHOLE OR PART, FOR ANY OTHER PROJECT WITHOUT THE WRITTEN AUTHORIZATION OF CDM SMITH.

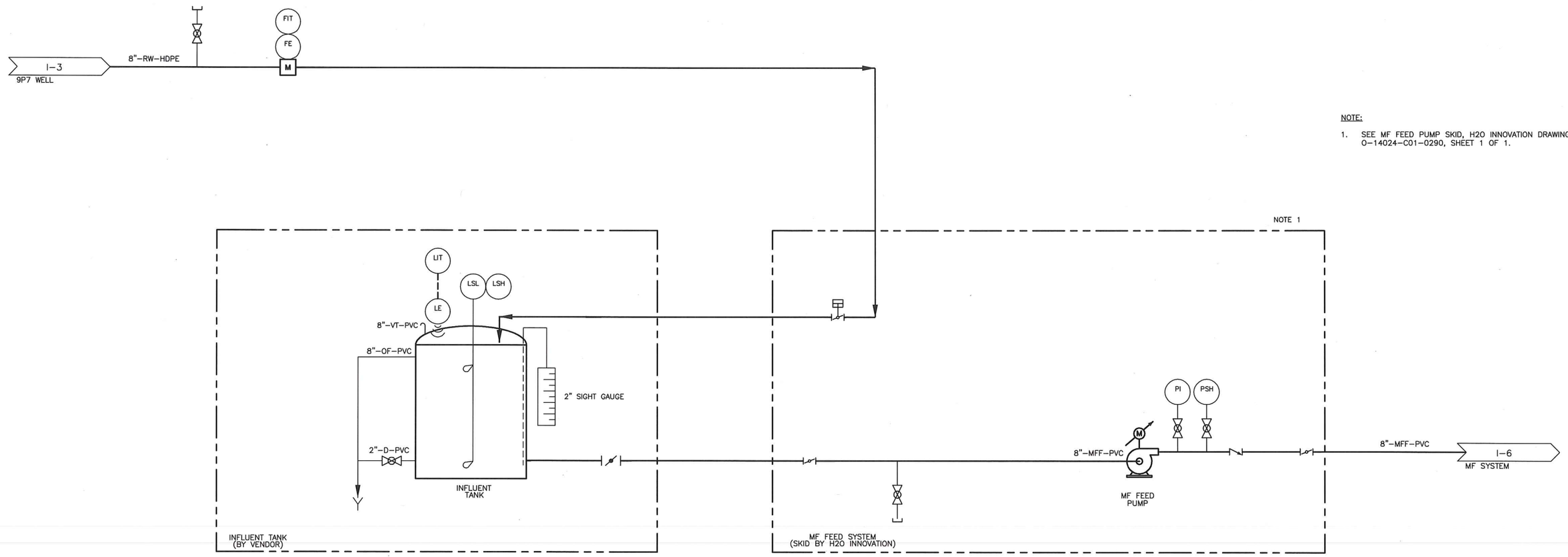

NOTE:

1. SEE MF FEED PUMP SKID, H2O INNOVATION DRAWING O-14024-C01-0290, SHEET 1 OF 1.

REV. NO.	DATE	DRWN	CHKD	REMARKS

DESIGNED BY: H.NGUYEN
DRAWN BY: J. ISIDORO
SHEET CHK'D BY: –
CROSS CHK'D BY: –
APPROVED BY: –
DATE: JUNE, 2014

WARNING
0 1/2" 1"
IF THIS BAR SCALE DOES NOT MEASURE 1" THIS DWG HAS BEEN REDUCED SCALE ACCORDINGLY

CDM Smith
111 Academy Way, Suite 150
Irvine, California 92617
Tel: (949) 752-5452

CAMBRIA EMERGENCY WATER SUPPLY PROJECT
CAMBRIA COMMUNITY SERVICE DISTRICT

PROCESS AND INSTRUMENTATION
AWTP INFLUENT TANK AND
MF FEED PUMP

PROJECT NO. 138760-104133
FILE NAME: I-5.DWG
SHEET NO.
I-5

NOT FOR CONSTRUCTION

©2014 CDM SMITH ALL RIGHTS RESERVED.
REUSE OF DOCUMENTS: THESE DOCUMENTS AND DESIGNS PROVIDED BY PROFESSIONAL SERVICE, INCORPORATED HEREIN, ARE THE PROPERTY OF CDM SMITH AND ARE NOT TO BE USED, IN WHOLE OR PART, FOR ANY OTHER PROJECT WITHOUT THE WRITTEN AUTHORIZATION OF CDM SMITH.

NOTE:

1. SEE MF STRAINER STATION, H2O INNOVATION DRAWING 0-14024-C01-0300, MICROFILTRATION UNIT W/ FCV DRAWING 0-14024-C01-0310 AND MF CIP DRAWING 0-14024-C01-0370.

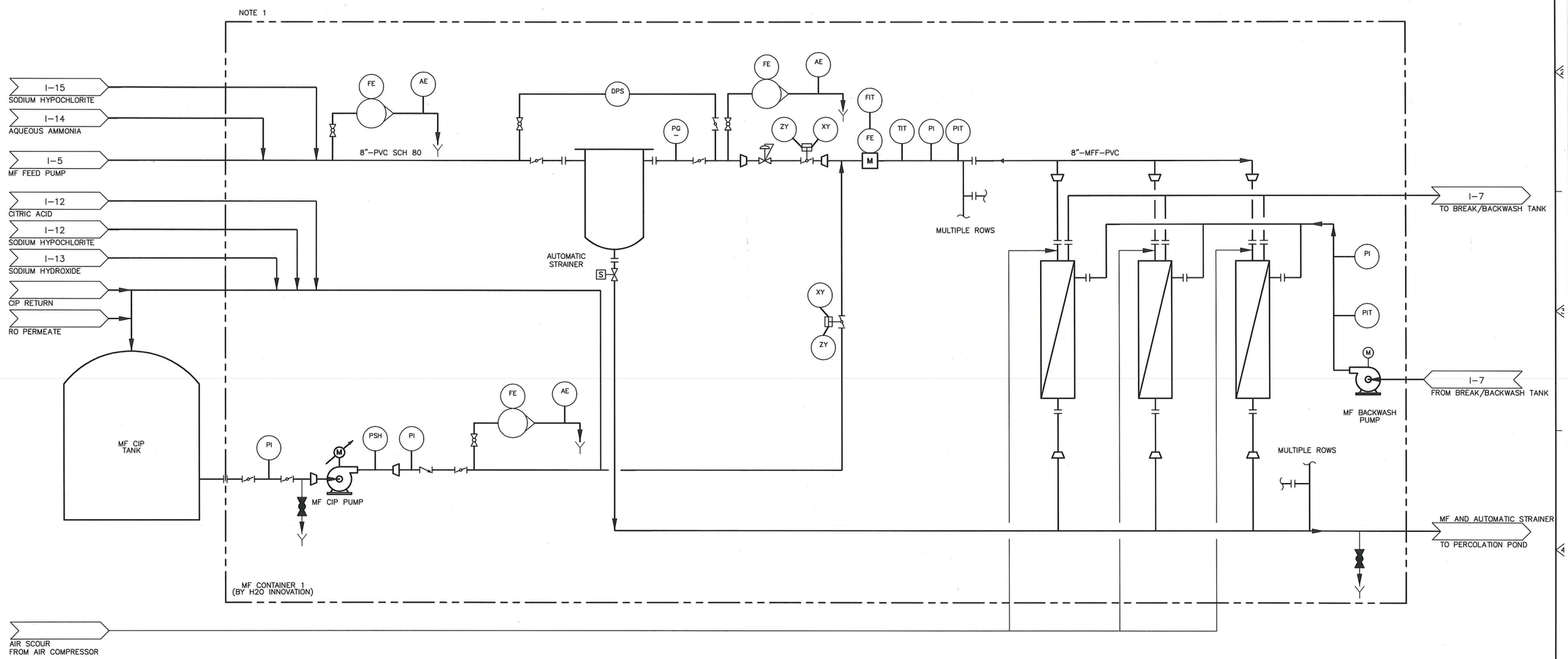

REV. NO.	DATE	DRWN	CHKD	REMARKS

DESIGNED BY: H.NGUYEN
DRAWN BY: J. ISIDORO
SHEET CHK'D BY: –
CROSS CHK'D BY: –
APPROVED BY: –
DATE: JUNE, 2014

WARNING
0 1/2" 1"
IF THIS BAR SCALE DOES NOT MEASURE 1" THIS DWG HAS BEEN REDUCED SCALE ACCORDINGLY

CDM Smith
111 Academy Way, Suite 150
Irvine, California 92617
Tel: (949) 752-5452

CAMBRIA EMERGENCY WATER SUPPLY PROJECT
CAMBRIA COMMUNITY SERVICE DISTRICT

PROCESS AND INSTRUMENTATION
MF STRAINER STATION AND
MICRO FILTRATION UNIT CONTAINER 1

PROJECT NO. 138760-104133
FILE NAME: I-6.DWG
SHEET NO.
I-6

NOT FOR CONSTRUCTION

© 2014 CDM SMITH ALL RIGHTS RESERVED.
REUSE OF DOCUMENTS: THESE DOCUMENTS AND DESIGNS PROVIDED BY PROFESSIONAL SERVICE, INCORPORATED HEREIN, ARE THE PROPERTY OF CDM SMITH AND ARE NOT TO BE USED, IN WHOLE OR PART, FOR ANY OTHER PROJECT WITHOUT THE WRITTEN AUTHORIZATION OF CDM SMITH.

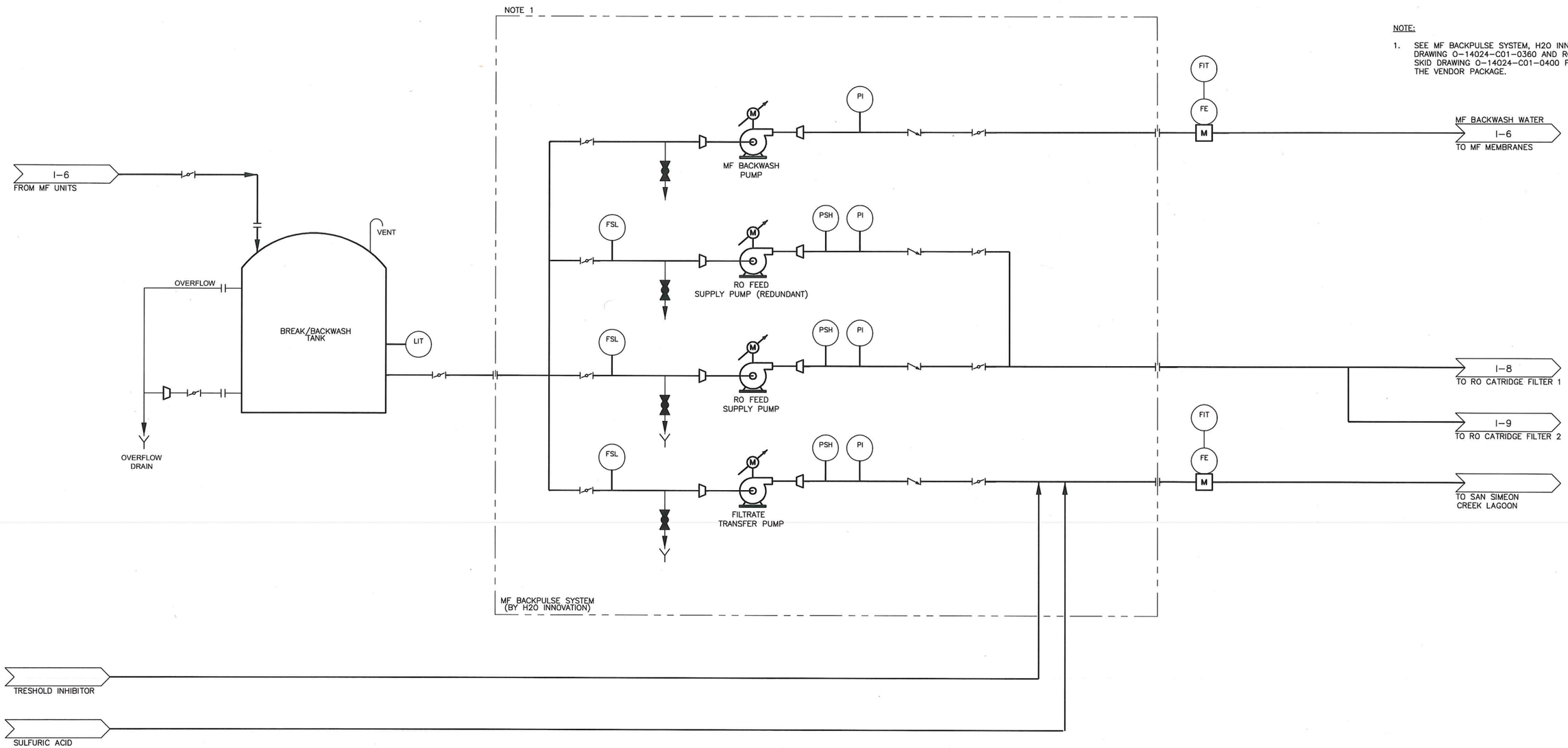

NOTE:

1. SEE MF BACKPULSE SYSTEM, H2O INNOVATION DRAWING O-14024-C01-0360 AND RO FEED PUMP SKID DRAWING O-14024-C01-0400 FOR DETAILS OF THE VENDOR PACKAGE.

© 2014 CDM SMITH ALL RIGHTS RESERVED.
REUSE OF DOCUMENTS: THESE DOCUMENTS AND DESIGNS PROVIDED BY PROFESSIONAL SERVICE, INCORPORATED HEREIN, ARE THE PROPERTY OF CDM SMITH AND ARE NOT TO BE USED, IN WHOLE OR PART, FOR ANY OTHER PROJECT WITHOUT THE WRITTEN AUTHORIZATION OF CDM SMITH.

REV. NO.	DATE	DRWN	CHKD	REMARKS

DESIGNED BY: H.NGUYEN
DRAWN BY: J. ISIDORO
SHEET CHK'D BY: –
CROSS CHK'D BY: –
APPROVED BY: –
DATE: JUNE, 2014

WARNING
0 1/2" 1"
IF THIS BAR SCALE DOES NOT MEASURE 1" THIS DWG HAS BEEN REDUCED SCALE ACCORDINGLY

CDM Smith
111 Academy Way, Suite 150
Irvine, California 92617
Tel: (949) 752-5452

CAMBRIA EMERGENCY WATER SUPPLY PROJECT
CAMBRIA COMMUNITY SERVICE DISTRICT

PROCESS AND INSTRUMENTATION DIAGRAM BREAK/BACKWASH TANK, FILTRATE TRANSFER AND RO FEED SUPPLY PUMPS

PROJECT NO. 138760-104133
FILE NAME: I-7.DWG
SHEET NO.
I-7

NOT FOR CONSTRUCTION

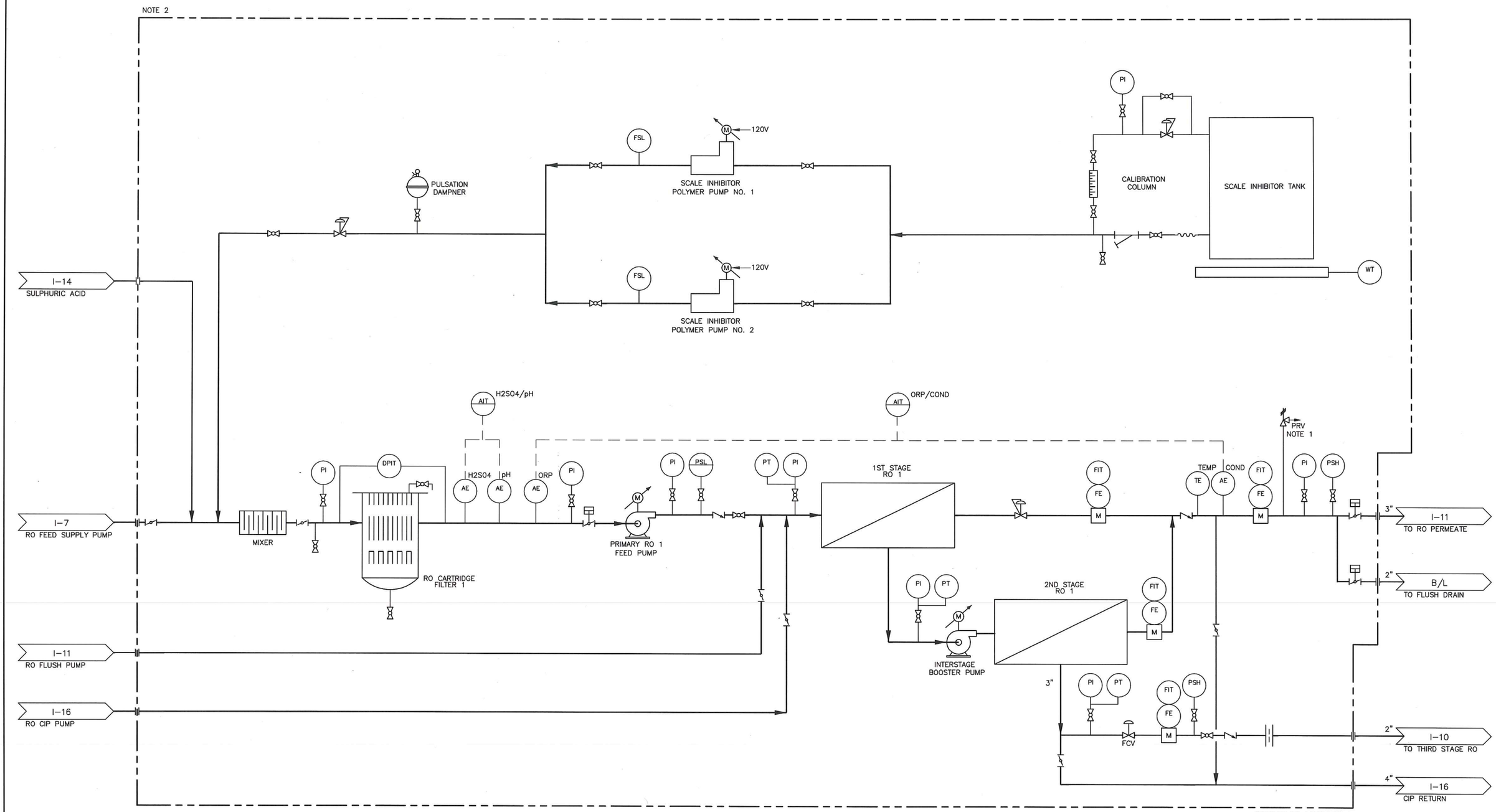

NOTE:

1. AIR RELIEF VALVE IS LOCATED AT THE HIGHEST POINT.
2. SEE PRIMARY RO CONTAINER 1, H2O INNOVATION DRAWING O-14024-C01-0410.

REV. NO.	DATE	DRWN	CHKD	REMARKS

DESIGNED BY: H.NGUYEN
DRAWN BY: J. ISIDORO
SHEET CHK'D BY: –
CROSS CHK'D BY: –
APPROVED BY: –
DATE: JUNE, 2014

WARNING
0 1/2" 1"
IF THIS BAR SCALE DOES NOT MEASURE 1" THIS DWG HAS BEEN REDUCED SCALE ACCORDINGLY

CDM Smith
111 Academy Way, Suite 150
Irvine, California 92617
Tel: (949) 752-5452

CAMBRIA EMERGENCY WATER SUPPLY PROJECT
CAMBRIA COMMUNITY SERVICE DISTRICT

PROCESS AND INSTRUMENTATION
PRIMARY RO CONTAINER 2

PROJECT NO. 138760-104133
FILE NAME: I-8.DWG
SHEET NO.
I-8

NOT FOR CONSTRUCTION

©2014 CDM SMITH. ALL RIGHTS RESERVED.
REUSE OF DOCUMENTS: THESE DOCUMENTS AND DESIGNS PROVIDED BY PROFESSIONAL SERVICE, INCORPORATED HEREIN, ARE THE PROPERTY OF CDM SMITH AND ARE NOT TO BE USED, IN WHOLE OR PART, FOR ANY OTHER PROJECT WITHOUT THE WRITTEN AUTHORIZATION OF CDM SMITH.

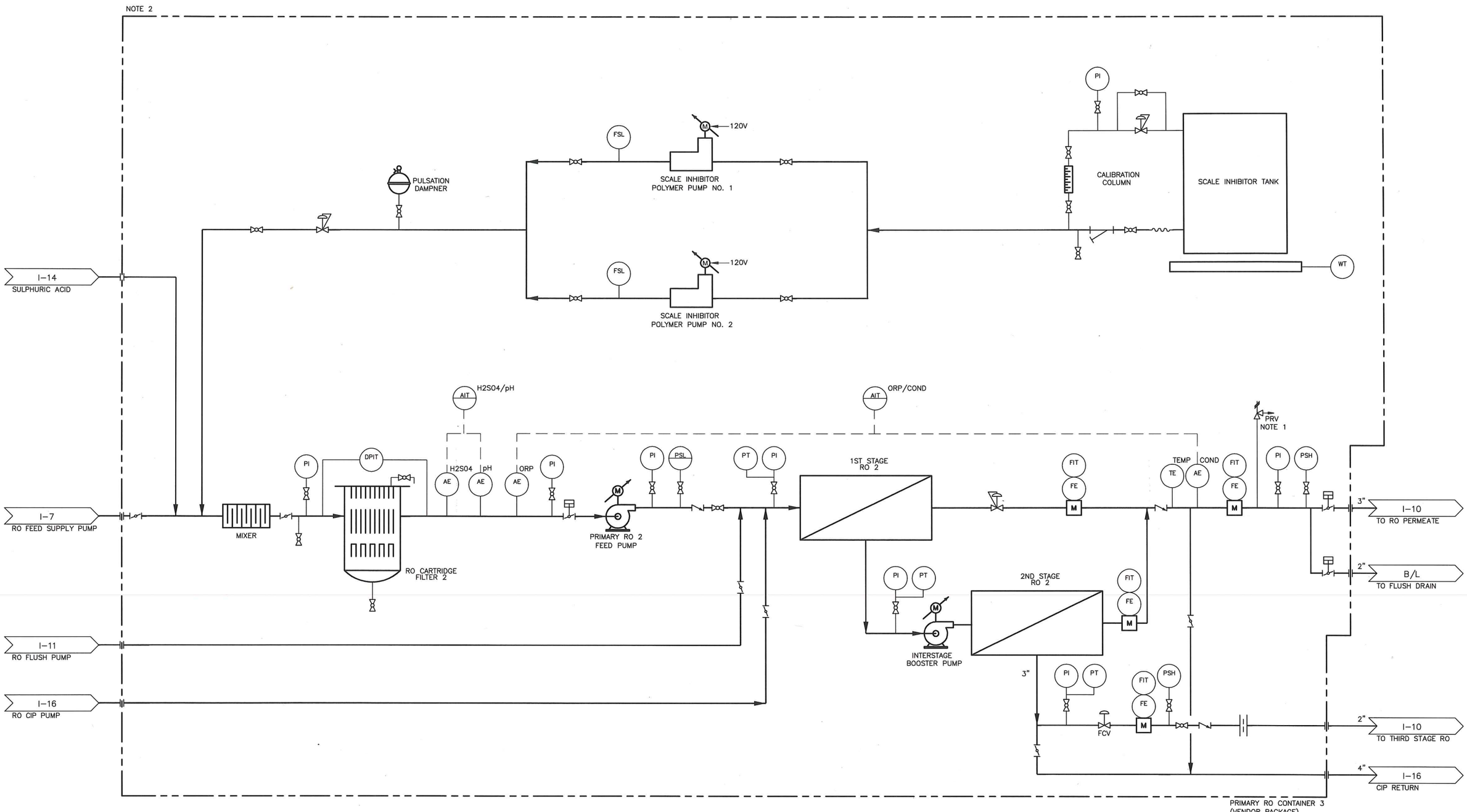

NOTE:

1. AIR RELIEF VALVE IS LOCATED AT THE HIGHEST POINT.
2. SEE PRIMARY RO CONTAINER 2, H2O INNOVATION DRAWING 0-14024-C01-0411.

REV. NO.	DATE	DRWN	CHKD	REMARKS

DESIGNED BY: H.NGUYEN
DRAWN BY: J. ISIDORO
SHEET CHK'D BY: –
CROSS CHK'D BY: –
APPROVED BY: –
DATE: JUNE, 2014

WARNING
0 1/2" 1"
IF THIS BAR SCALE DOES NOT MEASURE 1" THIS DWG HAS BEEN REDUCED SCALE ACCORDINGLY

CDM Smith
111 Academy Way, Suite 150
Irvine, California 92617
Tel: (949) 752-5452

CAMBRIA EMERGENCY WATER SUPPLY PROJECT
CAMBRIA COMMUNITY SERVICE DISTRICT

PROCESS AND INSTRUMENTATION
RO CONTAINER 3

PROJECT NO. 138760-104133
FILE NAME: I-9.DWG
SHEET NO.
I-9

NOT FOR CONSTRUCTION

© 2014 CDM SMITH ALL RIGHTS RESERVED.
REUSE OF DOCUMENTS: THESE DOCUMENTS AND DESIGNS PROVIDED BY PROFESSIONAL SERVICE, INCORPORATED HEREIN, ARE THE PROPERTY OF CDM SMITH AND ARE NOT TO BE USED, IN WHOLE OR PART, FOR ANY OTHER PROJECT WITHOUT THE WRITTEN AUTHORIZATION OF CDM SMITH.

©2014 CDM SMITH ALL RIGHTS RESERVED.
REUSE OF DOCUMENTS: THESE DOCUMENTS AND DESIGNS PROVIDED BY PROFESSIONAL SERVICE, INCORPORATED HEREIN, ARE THE PROPERTY OF CDM SMITH AND ARE NOT TO BE USED, IN WHOLE OR PART, FOR ANY OTHER PROJECT WITHOUT THE WRITTEN AUTHORIZATION OF CDM SMITH.

NOTE:

1. SEE THIRD STAGE RO, H2O INNOVATION DRAWING 0-14024-C01-0410.

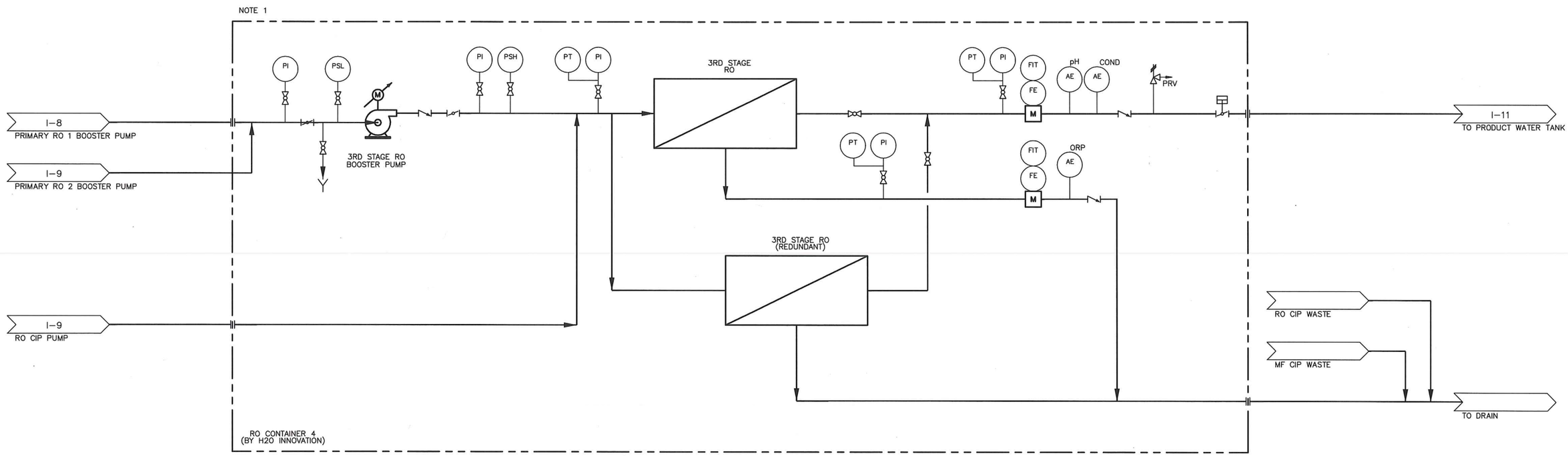

REV. NO.	DATE	DRWN	CHKD	REMARKS

DESIGNED BY: H.NGUYEN
DRAWN BY: J. ISIDORO
SHEET CHK'D BY: –
CROSS CHK'D BY: –
APPROVED BY: –
DATE: JUNE, 2014

WARNING
0 1/2" 1"
IF THIS BAR SCALE DOES NOT MEASURE 1" THIS DWG HAS BEEN REDUCED SCALE ACCORDINGLY

CDM Smith
111 Academy Way, Suite 150
Irvine, California 92617
Tel: (949) 752-5452

CAMBRIA EMERGENCY WATER SUPPLY PROJECT
CAMBRIA COMMUNITY SERVICE DISTRICT

PROCESS AND INSTRUMENTATION
THIRD STAGE RO CONTAINER 4

PROJECT NO. 138760-104133
FILE NAME: I-10.DWG
SHEET NO.
I-10

NOT FOR CONSTRUCTION

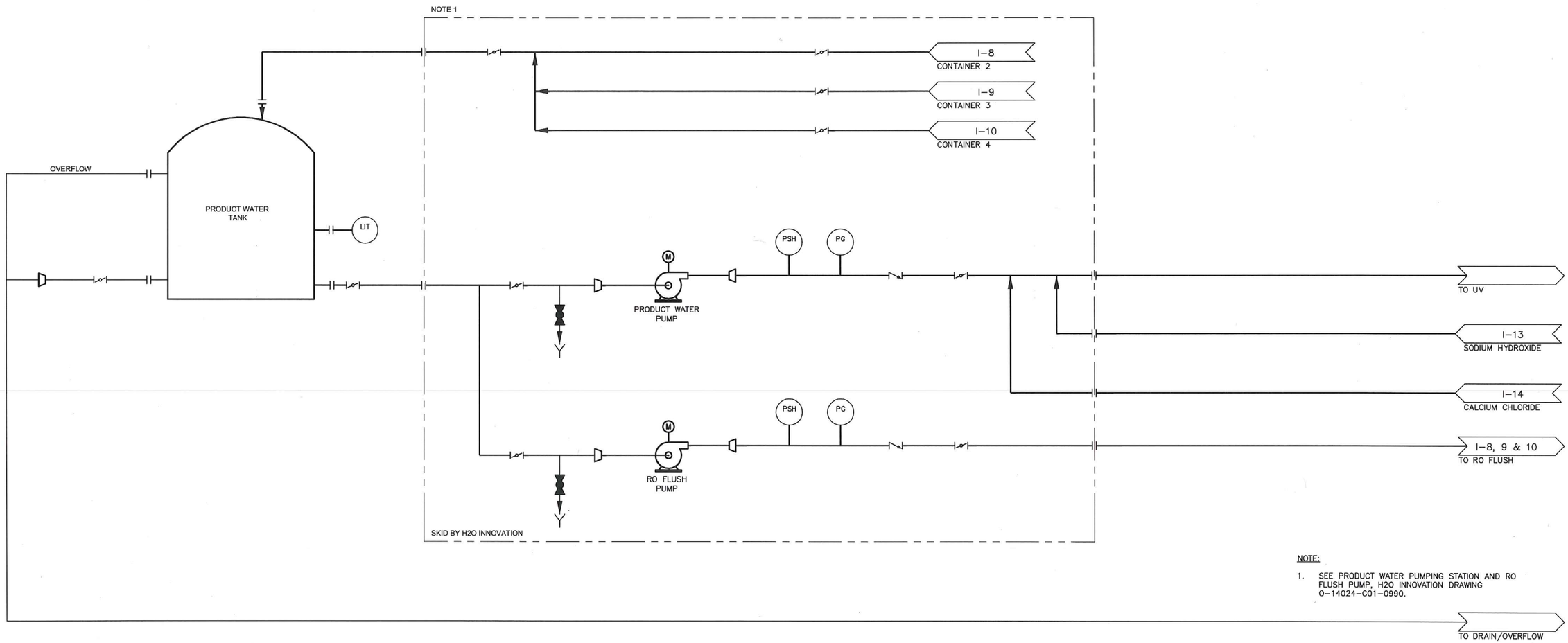

NOTE:

1. SEE PRODUCT WATER PUMPING STATION AND RO FLUSH PUMP, H2O INNOVATION DRAWING 0-14024-C01-0990.

REV. NO.	DATE	DRWN	CHKD	REMARKS

DESIGNED BY: H.NGUYEN
DRAWN BY: J. ISIDORO
SHEET CHK'D BY: –
CROSS CHK'D BY: –
APPROVED BY: –
DATE: JUNE, 2014

WARNING
0 1/2" 1"
IF THIS BAR SCALE DOES NOT MEASURE 1" THIS DWG HAS BEEN REDUCED SCALE ACCORDINGLY

CDM Smith
111 Academy Way, Suite 150
Irvine, California 92617
Tel: (949) 752-5452

CAMBRIA EMERGENCY WATER SUPPLY PROJECT
CAMBRIA COMMUNITY SERVICE DISTRICT

PROCESS AND INSTRUMENTATION DIAGRAM
PRODUCT WATER PUMPING STATION
AND RO FLUSH PUMP

PROJECT NO. 138760-104133
FILE NAME: I-11.DWG
SHEET NO.
I-11

NOT FOR CONSTRUCTION

© 2014 CDM SMITH ALL RIGHTS RESERVED.
REUSE OF DOCUMENTS: THESE DOCUMENTS AND DESIGNS PROVIDED BY PROFESSIONAL SERVICE, INCORPORATED HEREIN, ARE THE PROPERTY OF CDM SMITH AND ARE NOT TO BE USED, IN WHOLE OR PART, FOR ANY OTHER PROJECT WITHOUT THE WRITTEN AUTHORIZATION OF CDM SMITH.

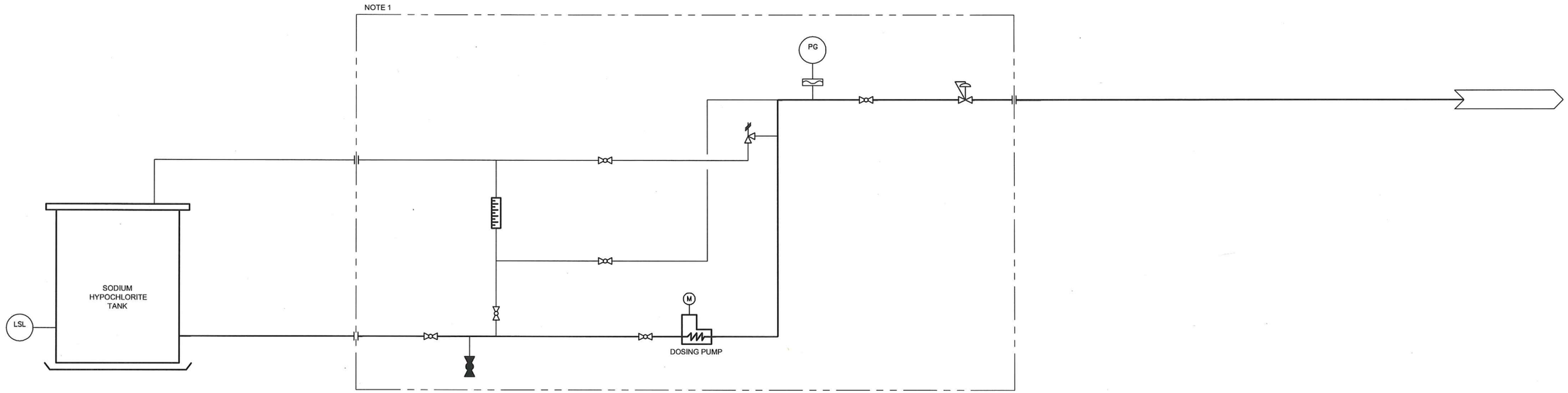

SODIUM HYPOCHLORITE DOSING SYSTEM
(VENDOR PACKAGE)

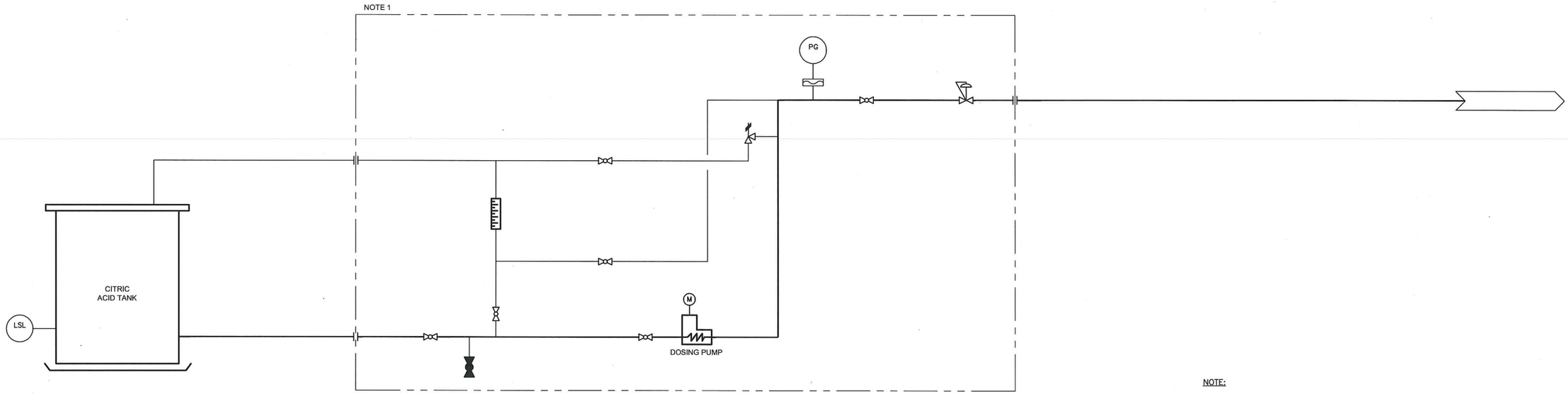

CITRIC ACID DOSING SYSTEM
(VENDOR PACKAGE)

NOTE:

1. SEE MF CLEANING SODIUM HYPOCHLORITE AND CITRIC ACID DOSING SYSTEMS, H2O INNOVATION DRAWING O-14024-C01-0800.

REV. NO.	DATE	DRWN	CHKD	REMARKS

DESIGNED BY: H.NGUYEN
DRAWN BY: T. KARTHICK
SHEET CHK'D BY: –
CROSS CHK'D BY: –
APPROVED BY: –
DATE: JUNE, 2014

WARNING
0 1/2" 1"
IF THIS BAR SCALE DOES NOT MEASURE 1" THIS DWG HAS BEEN REDUCED SCALE ACCORDINGLY

CDM Smith
111 Academy Way, Suite 150
Irvine, California 92617
Tel: (949) 752-5452

CAMBRIA EMERGENCY WATER SUPPLY PROJECT
CAMBRIA COMMUNITY SERVICE DISTRICT

PROCESS AND INSTRUMENTATION DIAGRAM MF CLEANING SODIUM HYPOCHLORITE AND CITRIC ACID DOSING SYSTEMS

PROJECT NO. 138760-104133
FILE NAME: I-12.DWG
SHEET NO.
I-12

NOT FOR CONSTRUCTION

© 2014 CDM SMITH ALL RIGHTS RESERVED.
REUSE OF DOCUMENTS: THESE DOCUMENTS AND DESIGNS PROVIDED BY PROFESSIONAL SERVICE, INCORPORATED HEREIN, ARE THE PROPERTY OF CDM SMITH AND ARE NOT TO BE USED, IN WHOLE OR PART, FOR ANY OTHER PROJECT WITHOUT THE WRITTEN AUTHORIZATION OF CDM SMITH.

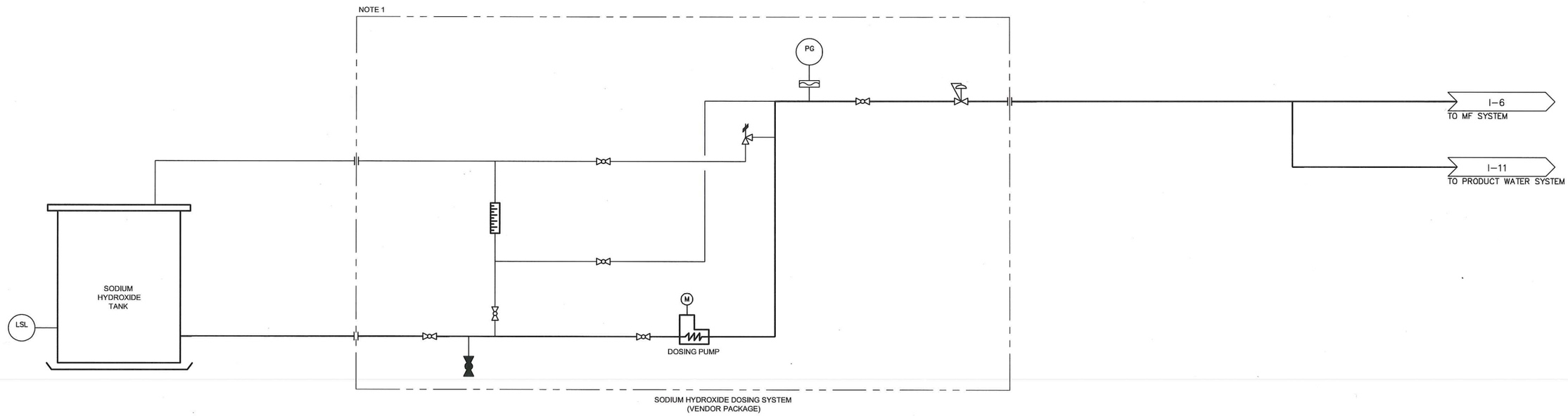

NOTE:

1. SEE MF CLEANING SODIUM HYDROXIDE DOSING SYSTEM, H2O INNOVATION DRAWING 0-14024-C01-08XX.

REV. NO.	DATE	DRWN	CHKD	REMARKS

DESIGNED BY: H.NGUYEN
DRAWN BY: T. KARTHICK
SHEET CHK'D BY: –
CROSS CHK'D BY: –
APPROVED BY: –
DATE: JUNE, 2014

WARNING
0 1/2" 1"
IF THIS BAR SCALE DOES NOT MEASURE 1" THIS DWG HAS BEEN REDUCED SCALE ACCORDINGLY

CDM Smith
111 Academy Way, Suite 150
Irvine, California 92617
Tel: (949) 752-5452

CAMBRIA EMERGENCY WATER SUPPLY PROJECT
CAMBRIA COMMUNITY SERVICE DISTRICT

PROCESS AND INSTRUMENTATION DIAGRAM
MF CLEANING SODIUM HYDROXIDE
DOSING SYSTEMS

PROJECT NO. 138760-104133
FILE NAME: I-13.DWG
SHEET NO.
I-13

NOT FOR CONSTRUCTION

©2014 CDM SMITH ALL RIGHTS RESERVED
REUSE OF DOCUMENTS: THESE DOCUMENTS AND DESIGNS PROVIDED BY PROFESSIONAL SERVICE, INCORPORATED HEREIN, ARE THE PROPERTY OF CDM SMITH AND ARE NOT TO BE USED, IN WHOLE OR PART, FOR ANY OTHER PROJECT WITHOUT THE WRITTEN AUTHORIZATION OF CDM SMITH.

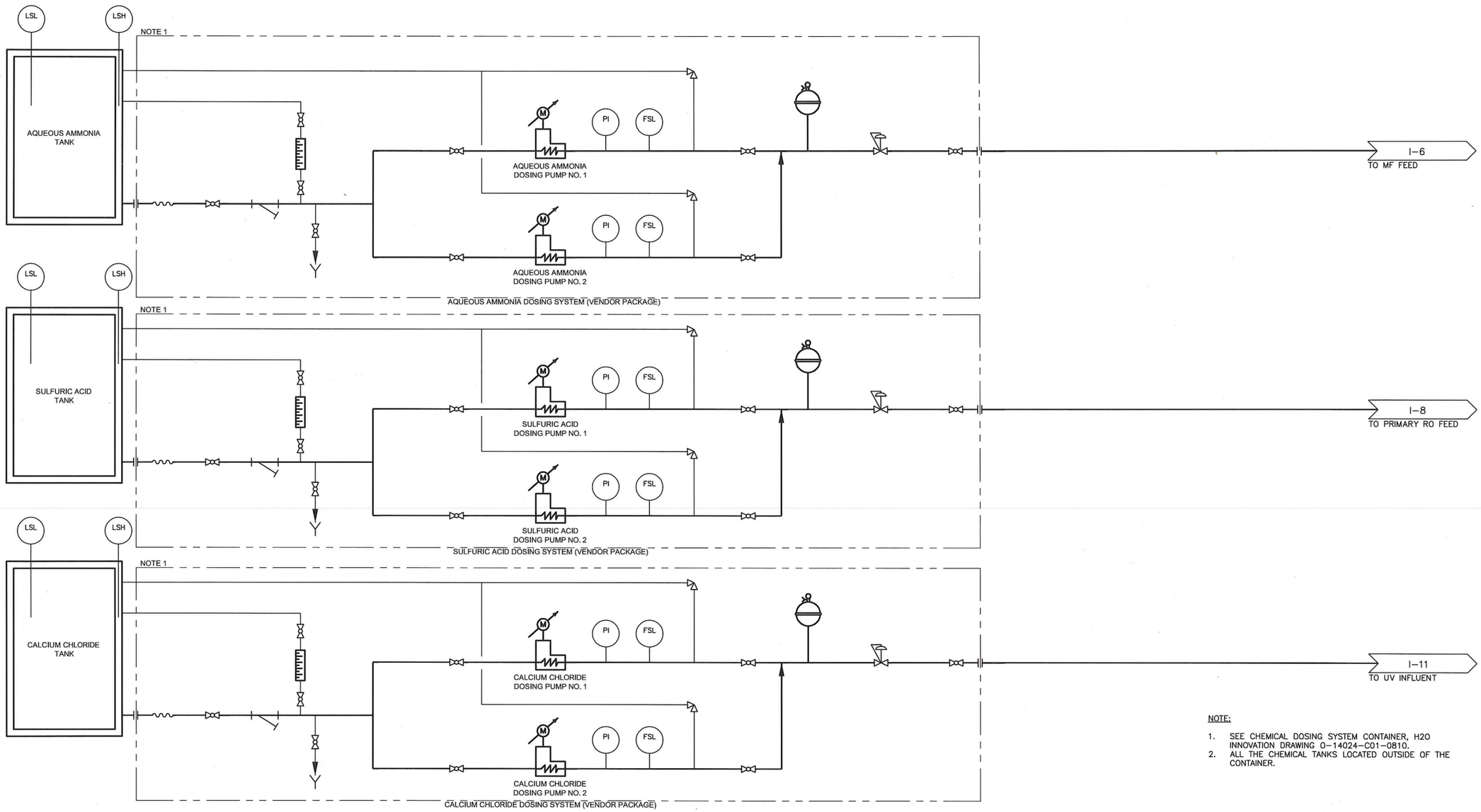

NOTE:

1. SEE CHEMICAL DOSING SYSTEM CONTAINER, H2O INNOVATION DRAWING O-14024-C01-0810.
2. ALL THE CHEMICAL TANKS LOCATED OUTSIDE OF THE CONTAINER.

REV. NO.	DATE	DRWN	CHKD	REMARKS

DESIGNED BY: H.NGUYEN
DRAWN BY: T. KARTHICK
SHEET CHK'D BY: –
CROSS CHK'D BY: –
APPROVED BY: –
DATE: JUNE, 2014

WARNING
0 1/2" 1"
IF THIS BAR SCALE DOES NOT MEASURE 1" THIS DWG HAS BEEN REDUCED SCALE ACCORDINGLY

CDM Smith
111 Academy Way, Suite 150
Irvine, California 92617
Tel: (949) 752-5452

CAMBRIA EMERGENCY WATER SUPPLY PROJECT
CAMBRIA COMMUNITY SERVICE DISTRICT

PROCESS AND INSTRUMENTATION DIAGRAM
CHEMICAL DOSING SYSTEM CONTAINER-1

PROJECT NO. 138760-104133
FILE NAME: I-14.DWG
SHEET NO.
I-14

NOT FOR CONSTRUCTION

© 2014 CDM SMITH ALL RIGHTS RESERVED.
REUSE OF DOCUMENTS: THESE DOCUMENTS AND DESIGNS PROVIDED BY PROFESSIONAL SERVICE, INCORPORATED HEREIN, ARE THE PROPERTY OF CDM SMITH AND ARE NOT TO BE USED, IN WHOLE OR PART, FOR ANY OTHER PROJECT WITHOUT THE WRITTEN AUTHORIZATION OF CDM SMITH.

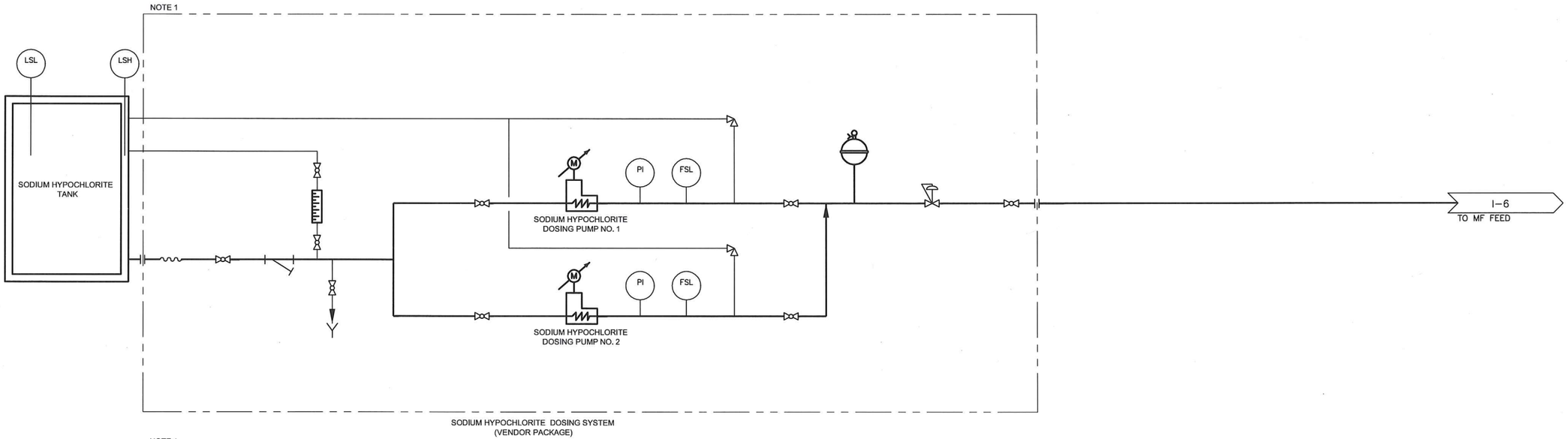

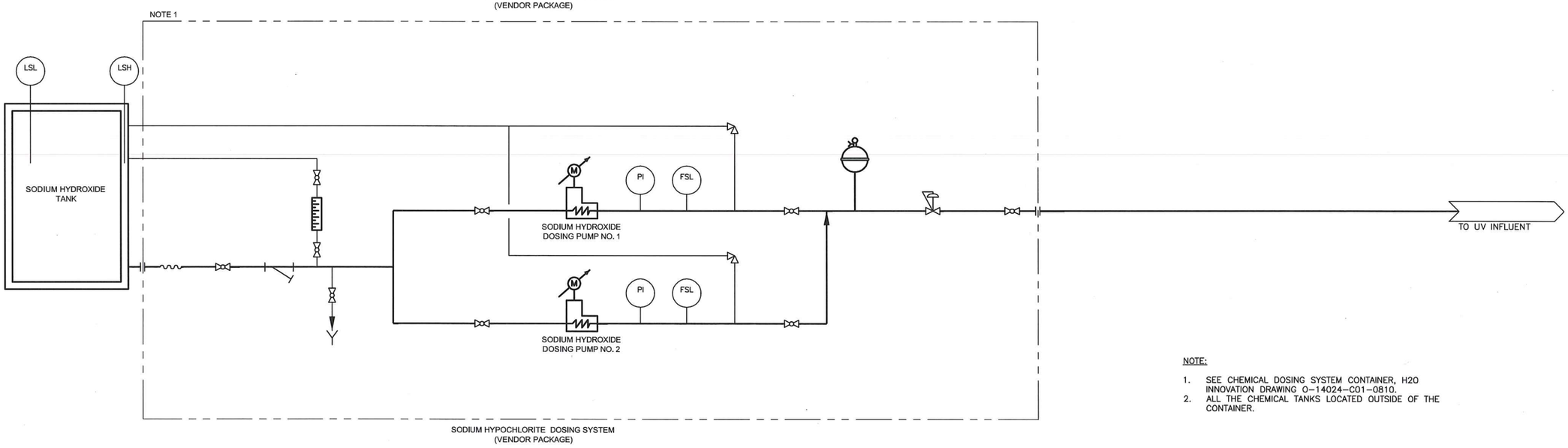

NOTE:

1. SEE CHEMICAL DOSING SYSTEM CONTAINER, H2O INNOVATION DRAWING O-14024-C01-0810.
2. ALL THE CHEMICAL TANKS LOCATED OUTSIDE OF THE CONTAINER.

REV. NO.	DATE	DRWN	CHKD	REMARKS

DESIGNED BY: H.NGUYEN
DRAWN BY: T. KARTHICK
SHEET CHK'D BY: –
CROSS CHK'D BY: –
APPROVED BY: –
DATE: JUNE, 2014

WARNING
0 1/2" 1"
IF THIS BAR SCALE DOES NOT MEASURE 1" THIS DWG HAS BEEN REDUCED SCALE ACCORDINGLY

CDM Smith
111 Academy Way, Suite 150
Irvine, California 92617
Tel: (949) 752-5452

CAMBRIA EMERGENCY WATER SUPPLY PROJECT
CAMBRIA COMMUNITY SERVICE DISTRICT

PROCESS AND INSTRUMENTATION DIAGRAM
CHEMICAL DOSING SYSTEM CONTAINER-2

PROJECT NO. 138760-104133
FILE NAME: I-15.DWG
SHEET NO.
I-15

NOT FOR CONSTRUCTION

© 2014 CDM SMITH ALL RIGHTS RESERVED.
REUSE OF DOCUMENTS: THESE DOCUMENTS AND DESIGNS PROVIDED BY PROFESSIONAL SERVICE, INCORPORATED HEREIN, ARE THE PROPERTY OF CDM SMITH AND ARE NOT TO BE USED, IN WHOLE OR PART, FOR ANY OTHER PROJECT WITHOUT THE WRITTEN AUTHORIZATION OF CDM SMITH.

NOTE:

1. SEE RO CIP SYSTEM, H2O INNOVATION DRAWING 0-14024-C01-12.

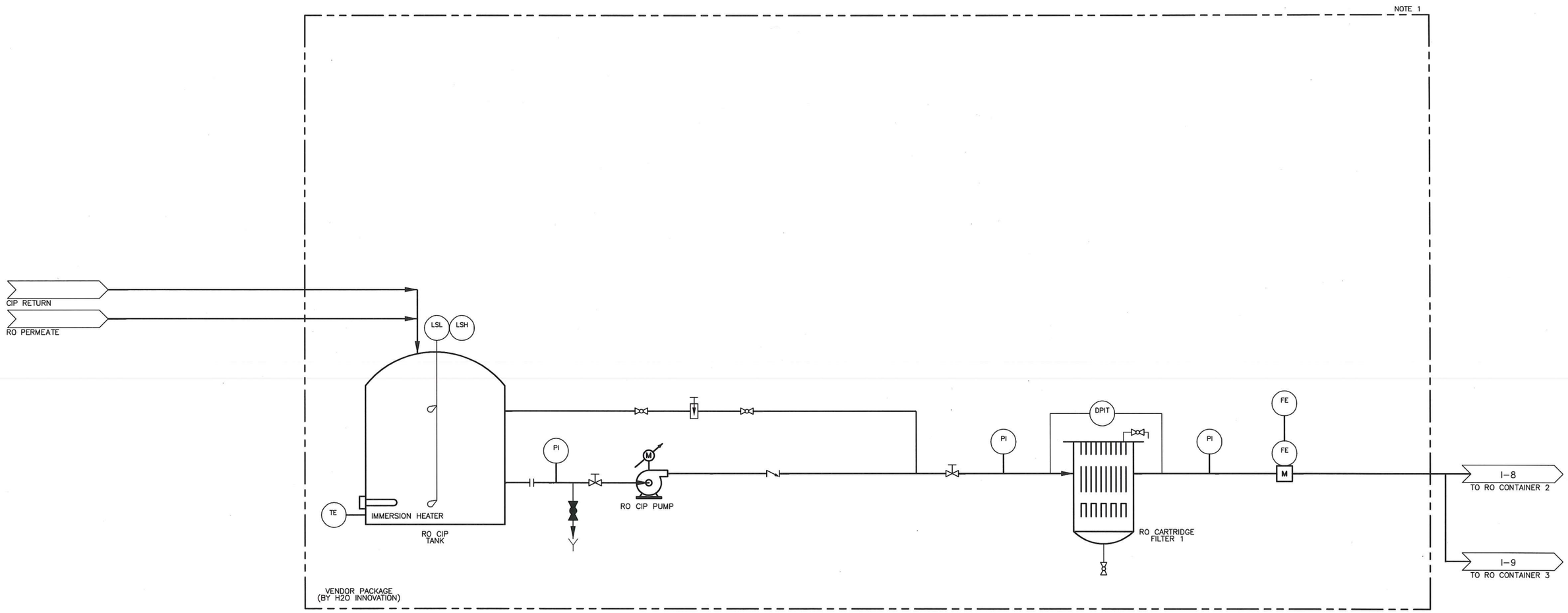

REV. NO.	DATE	DRWN	CHKD	REMARKS

DESIGNED BY: H.NGUYEN
DRAWN BY: J. ISIDORO
SHEET CHK'D BY: –
CROSS CHK'D BY: –
APPROVED BY: –
DATE: JUNE, 2014

WARNING
0 1/2" 1"
IF THIS BAR SCALE DOES NOT MEASURE 1" THIS DWG HAS BEEN REDUCED SCALE ACCORDINGLY

CDM Smith
111 Academy Way, Suite 150
Irvine, California 92617
Tel: (949) 752-5452

CAMBRIA EMERGENCY WATER SUPPLY PROJECT
CAMBRIA COMMUNITY SERVICE DISTRICT

PROCESS AND INSTRUMENTATION
RO CIP SYSTEM

PROJECT NO. 138760-104133
FILE NAME: I-16.DWG
SHEET NO.
I-16

NOT FOR CONSTRUCTION

© 2014 CDM SMITH ALL RIGHTS RESERVED.
REUSE OF DOCUMENTS: THESE DOCUMENTS AND DESIGNS PROVIDED BY PROFESSIONAL SERVICE, INCORPORATED HEREIN, ARE THE PROPERTY OF CDM SMITH AND ARE NOT TO BE USED, IN WHOLE OR PART, FOR ANY OTHER PROJECT WITHOUT THE WRITTEN AUTHORIZATION OF CDM SMITH.

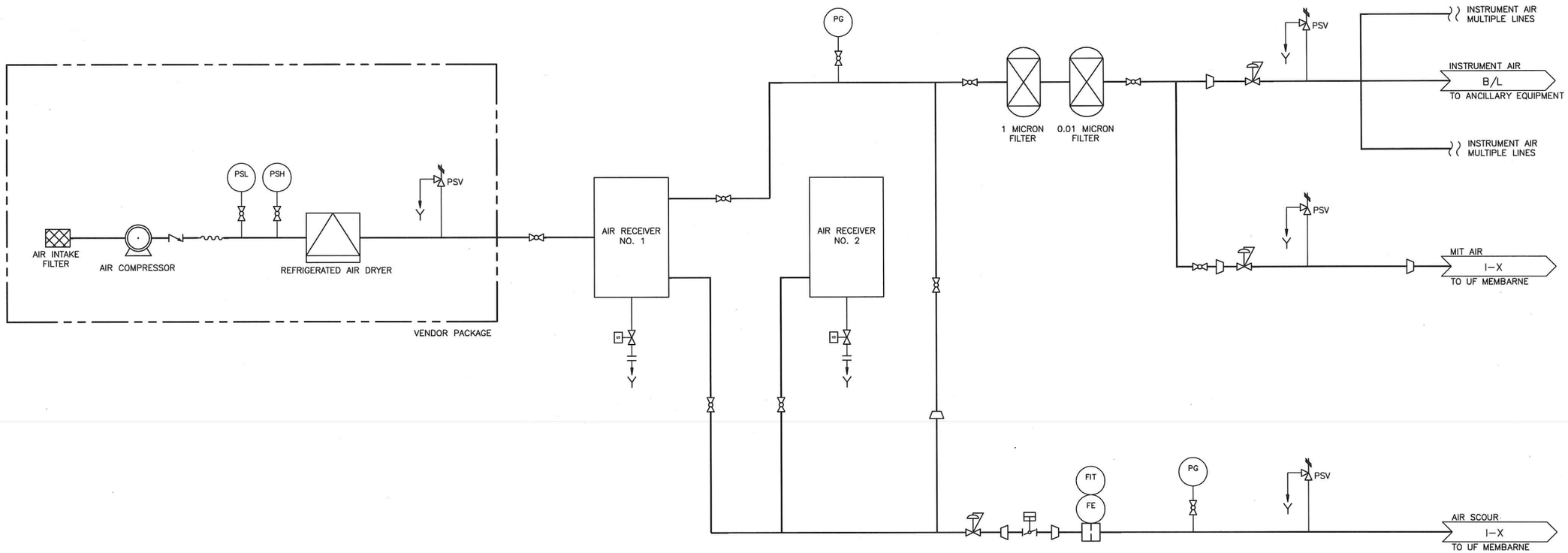

REV. NO.	DATE	DRWN	CHKD	REMARKS

DESIGNED BY: H.NGUYEN
DRAWN BY: J. ISIDORO
SHEET CHK'D BY: –
CROSS CHK'D BY: –
APPROVED BY: –
DATE: JUNE, 2014

WARNING
0 1/2" 1"
IF THIS BAR SCALE DOES NOT MEASURE 1" THIS DWG HAS BEEN REDUCED SCALE ACCORDINGLY

CDM Smith
111 Academy Way, Suite 150
Irvine, California 92617
Tel: (949) 752-5452

CAMBRIA EMERGENCY WATER SUPPLY PROJECT
CAMBRIA COMMUNITY SERVICE DISTRICT

PROCESS AND INSTRUMENTATION
AIR COMPRESSOR SYSTEM

PROJECT NO. 138760-104133
FILE NAME: I-17.DWG
SHEET NO.
I-17

NOT FOR CONSTRUCTION

© 2014 CDM SMITH ALL RIGHTS RESERVED.
REUSE OF DOCUMENTS: THESE DOCUMENTS AND DESIGNS PROVIDED BY PROFESSIONAL SERVICE, INCORPORATED HEREIN, ARE THE PROPERTY OF CDM SMITH AND ARE NOT TO BE USED, IN WHOLE OR PART, FOR ANY OTHER PROJECT WITHOUT THE WRITTEN AUTHORIZATION OF CDM SMITH.

VENDOR PACKAGE
H2OI SUPPLY

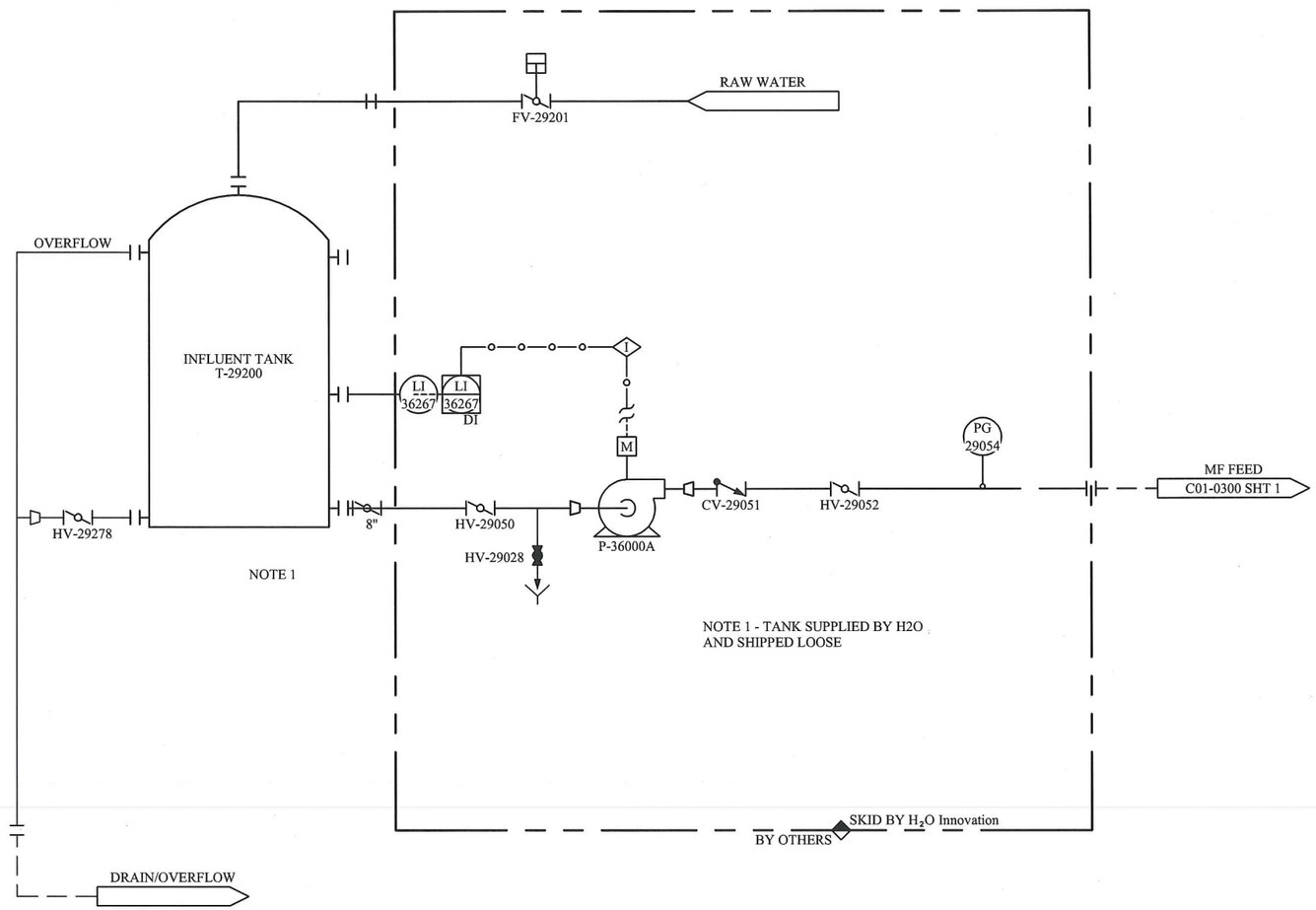

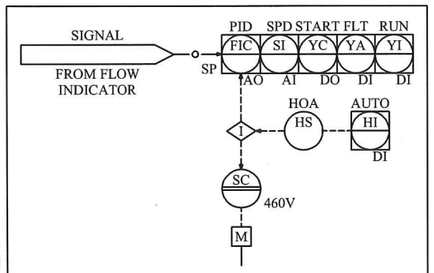

TYPICAL PUMP MOTOR (WITH VFD)

NOTE:
THE INFORMATION, SPECIFICATIONS AND DATA SHOWN ON THIS PRINT ARE FURNISHED BY AND ARE TO REMAIN THE PROPERTY OF H_2O INNOVATION.

THE PURPOSE OF THIS DOCUMENT IS TO FACILITATE THE INSTALLATION, MAINTENANCE AND OPERATION OF THE EQUIPMENT REPRESENTED BY SAID PRINT. NO OTHER USE OF THIS DOCUMENT SHALL BE MADE WITHOUT EXPRESS WRITTEN CONSENT FROM H_2O INNOVATION.

DRAWING REVISION

REV	DATE (DD/MM/YYYY)	REVISION DESCRIPTION	DRAWN	CHKD	ENG	APPVD
A	08/07/2013	PRELIMINARY	-	-	-	-

h2O innovation
knowledge to share.du savoir à partager

UNLESS NOTED OTHERWISE
INTERPRETATION: ANSI Y14.5
TOLERANCES
FRACTIONS: ±1/16"
DECIMALS 0.X: ±0.030
0.XX: ±0.015
ANGLES: ±0.5°
HOLE SIZES: ±1/32"
HOLE CENTERS: ±1/32"
DO NOT SCALE PRINTS

CAMBRIA COMMUNITY SERVICE DISTRICT EMERGENCY WATER

SUPPLY PROJECT

TITLE:
MF FEED PUMP SKID
PROCESS & INSTRUMENTATION DIAGRAM

SCALE: N/A
DRAWING NUMBER: O-14024-C01-0290
SHEET: 1 of 1
REVISION: A

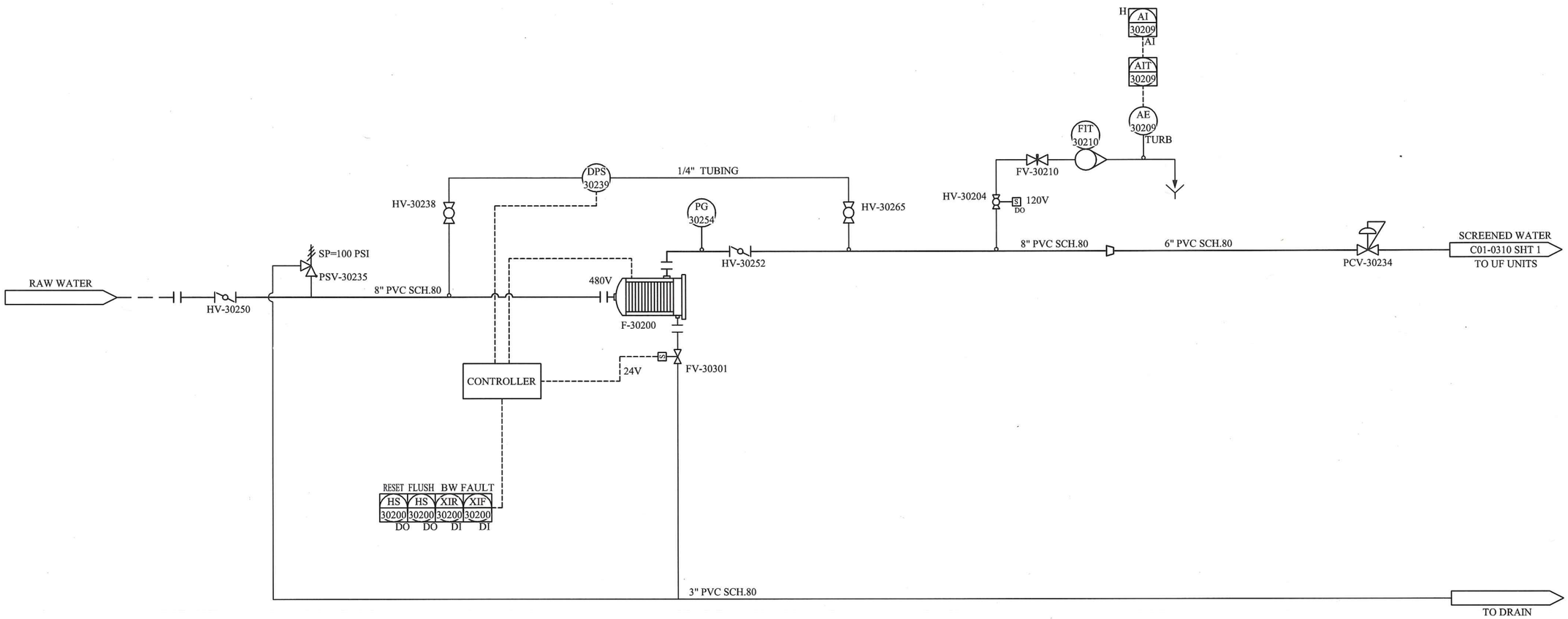

NOTE:
THE INFORMATION, SPECIFICATIONS AND DATA SHOWN ON THIS PRINT ARE FURNISHED BY AND ARE TO REMAIN THE PROPERTY OF H_2O INNOVATION.

THE PURPOSE OF THIS DOCUMENT IS TO FACILITATE THE INSTALLATION, MAINTENANCE AND OPERATION OF THE EQUIPMENT REPRESENTED BY SAID PRINT. NO OTHER USE OF THIS DOCUMENT SHALL BE MADE WITHOUT EXPRESS WRITTEN CONSENT FROM H_2O INNOVATION.

DRAWING REVISION

REV	DATE (DD/MM/YYYY)	REVISION DESCRIPTION	DRAWN	CHKD	ENG	APPVD
0	12/06/2014	PRELIMINARY	M.C	M.B	M.B	-

h2o innovation
knowledge to share.du savoir à partager

UNLESS NOTED OTHERWISE
INTERPRETATION: ANSI Y14.5
TOLERANCES
FRACTIONS: ±1/16"
DECIMALS 0.X: ±0.030
0.XX: ±0.015
ANGLES: ±0.5°
HOLE SIZES: ±1/32"
HOLE CENTERS: ±1/32"
DO NOT SCALE PRINTS

CAMBRIA COMMUNITY SERVICES
DISTRICT EMERGENCY WATER
SUPPLY PROJET

TITLE:
MF STRAINER STATION
PROCESS & INSTRUMENTATION DIAGRAM

SCALE: N/A
DRAWING NUMBER: O-14024-C01-0300
SHEET: 1 of 1
REVISION: A

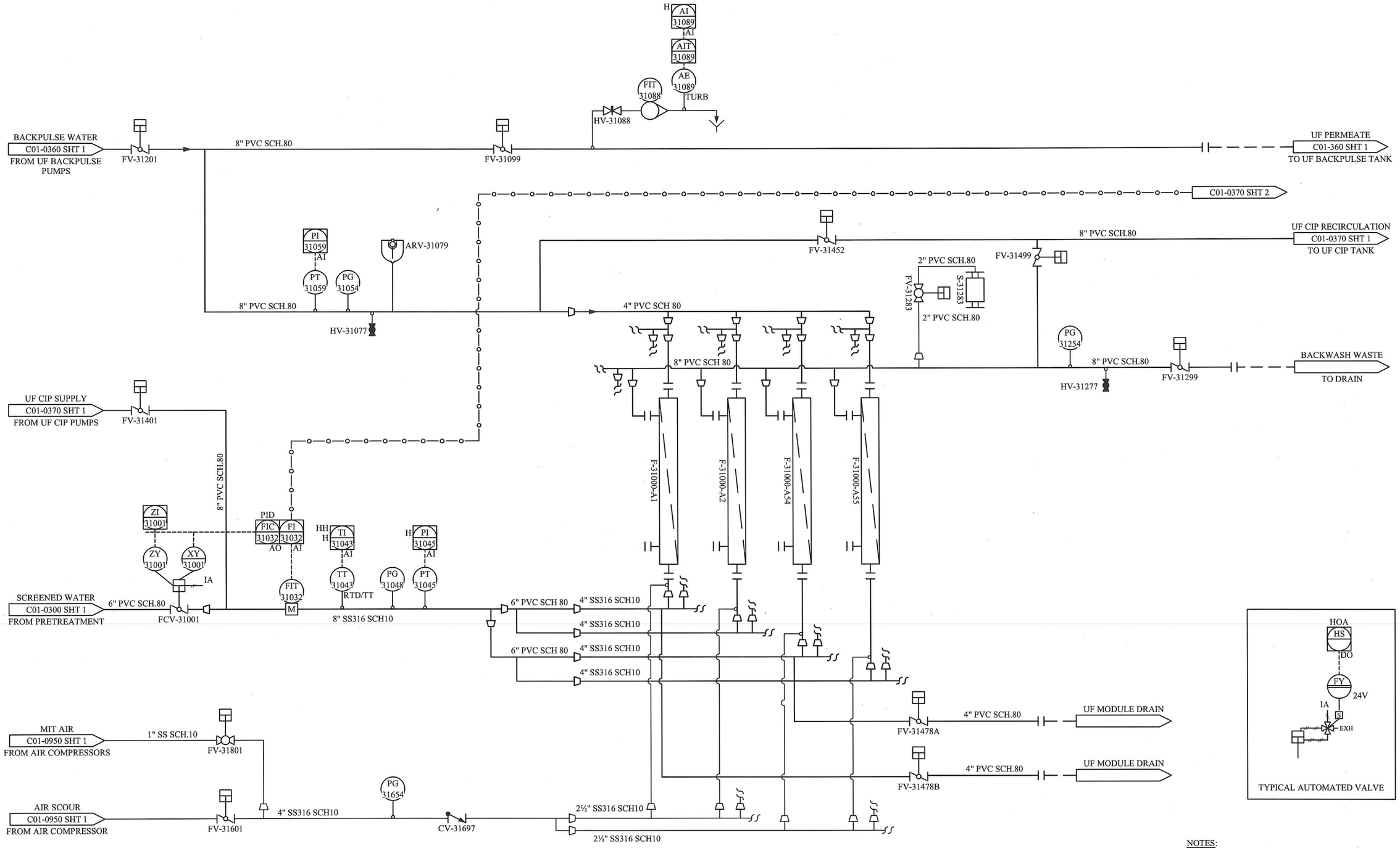

NOTES:

1. GRAVITY DRAIN FOR THE ENTIRE SKID IS REQUIRED.

NOTE:
THE INFORMATION, SPECIFICATIONS AND DATA SHOWN ON THIS PRINT ARE FURNISHED BY AND ARE TO REMAIN THE PROPERTY OF H_2O INNOVATION.

THE PURPOSE OF THIS DOCUMENT IS TO FACILITATE THE INSTALLATION, MAINTENANCE AND OPERATION OF THE EQUIPMENT REPRESENTED BY SAID PRINT. NO OTHER USE OF THIS DOCUMENT SHALL BE MADE WITHOUT EXPRESS WRITTEN CONSENT FROM H_2O INNOVATION.

DRAWING REVISION

REV	DATE (DD/MM/YYYY)	REVISION DESCRIPTION	DRAWN	CHKD	ENG	APPVD
0	12/06/2014	PRELIMINARY	M.C	M.C	M.C	-

h2o innovation
knowledge to share.du savoir à partager

UNLESS NOTED OTHERWISE
INTERPRETATION: ANSI Y14.5
TOLERANCES
FRACTIONS: ±1/16"
DECIMALS 0.X: ±0.030
0.XX: ±0.015
ANGLES: ±0.5°
HOLE SIZES: ±1/32"
HOLE CENTERS: ±1/32"
DO NOT SCALE PRINTS

CAMBRIA COMMUNITY SERVICES
DISTRICT EMERGENCY WATER

SUPPLY PROJET

TITLE:
MICRO FILTRATION UNIT W/FCV
PROCESS & INSTRUMENTATION DIAGRAM

SCALE:	DRAWING NUMBER:	REVISION
N/A	O-14024-C01-0310 SHEET: 1 of 1	A

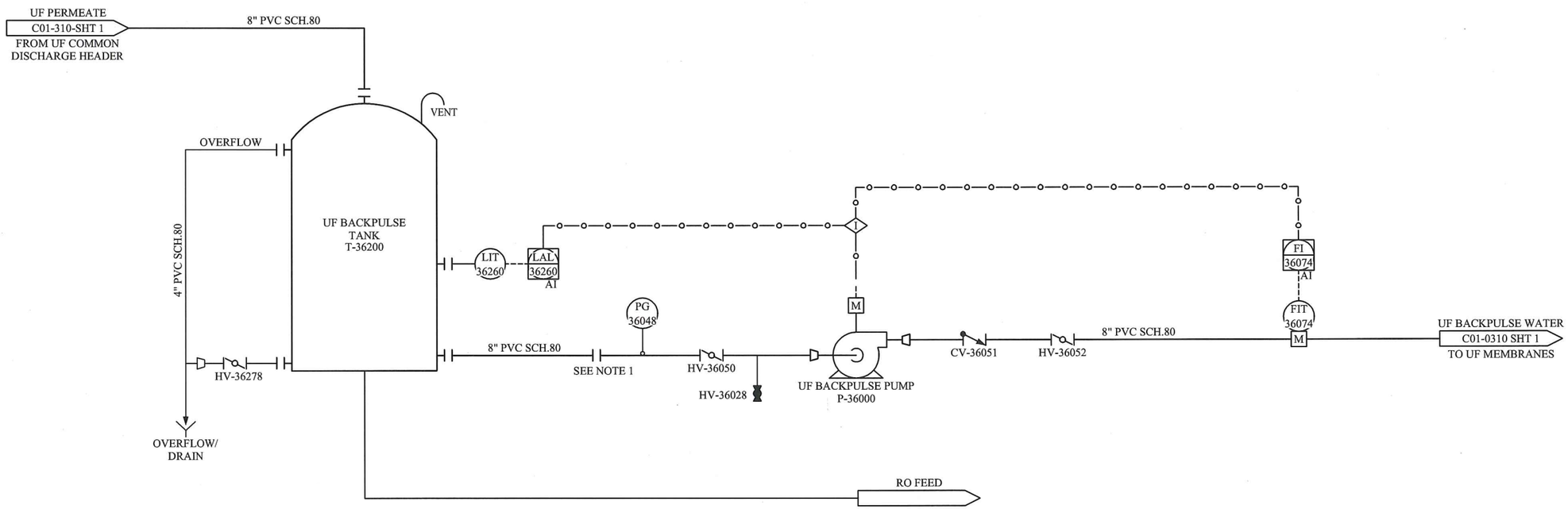

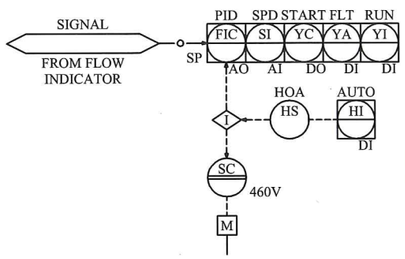

TYPICAL PUMP MOTOR WITH VFD

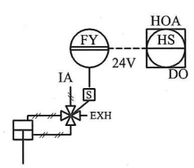

TYPICAL AUTOMATED VALVE

NOTES:

1. THE BACKPULSE TANK IS LOCATED OUTSIDE THE CONTAINER. ALL VALVES, INSTRUMENTS, AND PIPING ARE SHIPPED LOOSE TO BE INSTALLED BY OTHERS.

NOTE:
THE INFORMATION, SPECIFICATIONS AND DATA SHOWN ON THIS PRINT ARE FURNISHED BY AND ARE TO REMAIN THE PROPERTY OF H_2O INNOVATION.

THE PURPOSE OF THIS DOCUMENT IS TO FACILITATE THE INSTALLATION, MAINTENANCE AND OPERATION OF THE EQUIPMENT REPRESENTED BY SAID PRINT. NO OTHER USE OF THIS DOCUMENT SHALL BE MADE WITHOUT EXPRESS WRITTEN CONSENT FROM H_2O INNOVATION.

DRAWING REVISION

REV	DATE (DD/MM/YYYY)	REVISION DESCRIPTION	DRAWN	CHKD	ENG	APPVD
A	12/06/2014	PRELIMINARY	M.C	M.B	M.B	-

h2o innovation
knowledge to share.du savoir à partager

UNLESS NOTED OTHERWISE
INTERPRETATION: ANSI Y14.5
TOLERANCES
FRACTIONS: ±1/16"
DECIMALS 0.X: ±0.030
0.XX: ±0.015
ANGLES: ±0.5°
HOLE SIZES: ±1/32"
HOLE CENTERS: ±1/32"
DO NOT SCALE PRINTS

CAMBRIA COMMUNITY SERVICES
DISTRICT EMERGENCY WATER
SUPPLY PROJECT

TITLE:
MF BACKPULSE SYSTEM
PROCESS & INSTRUMENTATION DIAGRAM

SCALE:	DRAWING NUMBER:	REVISION
N/A	O-14024-C01-0360 SHEET: 1 of 1	A

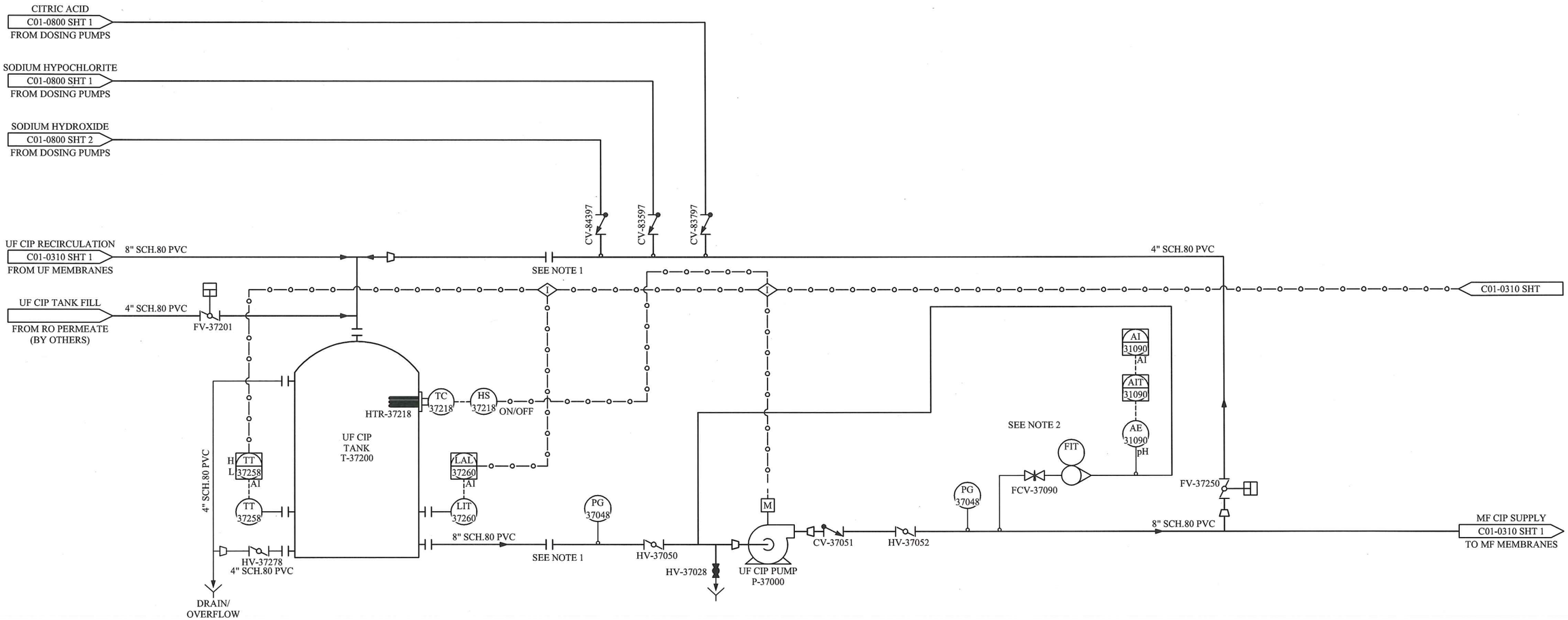

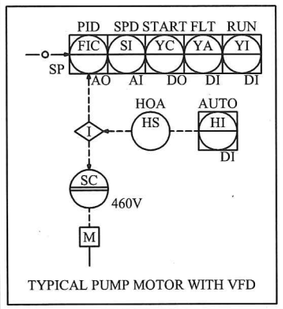

TYPICAL PUMP MOTOR WITH VFD

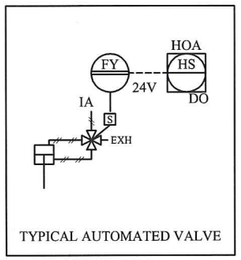

TYPICAL AUTOMATED VALVE

NOTES:

1. THE CIP TANK IS LOCATED OUTSIDE THE CONTAINER. ALL VALVES, INSTRUMENTS, AND PIPING ARE SHIPPED LOOSE TO BE INSTALLED BY OTHERS.
2. INSTRUMENT TO BE PLUMBED SO IT STAYS FLOODED

NOTE:
THE INFORMATION, SPECIFICATIONS AND DATA SHOWN ON THIS PRINT ARE FURNISHED BY AND ARE TO REMAIN THE PROPERTY OF H_2O INNOVATION.

THE PURPOSE OF THIS DOCUMENT IS TO FACILITATE THE INSTALLATION, MAINTENANCE AND OPERATION OF THE EQUIPMENT REPRESENTED BY SAID PRINT. NO OTHER USE OF THIS DOCUMENT SHALL BE MADE WITHOUT EXPRESS WRITTEN CONSENT FROM H_2O INNOVATION.

DRAWING REVISION

REV	DATE (DD/MM/YYYY)	REVISION DESCRIPTION	DRAWN	CHKD	ENG	APPVD
A	12/06/2014	PRELIMINARY	M.C	M.B	M.B	-

h2O innovation
knowledge to share.du savoir à partager

UNLESS NOTED OTHERWISE
INTERPRETATION: ANSI Y14.5
TOLERANCES
FRACTIONS: ±1/32"
DECIMALS 0.X: ±0.030
0.XX: ±0.015
ANGLES: ±0.5°
HOLE SIZES: ±1/32"
HOLE CENTERS: ±1/32"
DO NOT SCALE PRINTS

CAMBRIA COMMUNITY SERVICES
DISTRICT EMERGENCY WATER

SUPPLY PROJECT

TITLE:
MF CIP SYSTEM
W/ VFD CONTROLLED PUMP
PROCESS & INSTRUMENTATION DIAGRAM

SCALE: N/A
DRAWING NUMBER: O-14024-C01-0370
SHEET: 1 of 1
REVISION: A

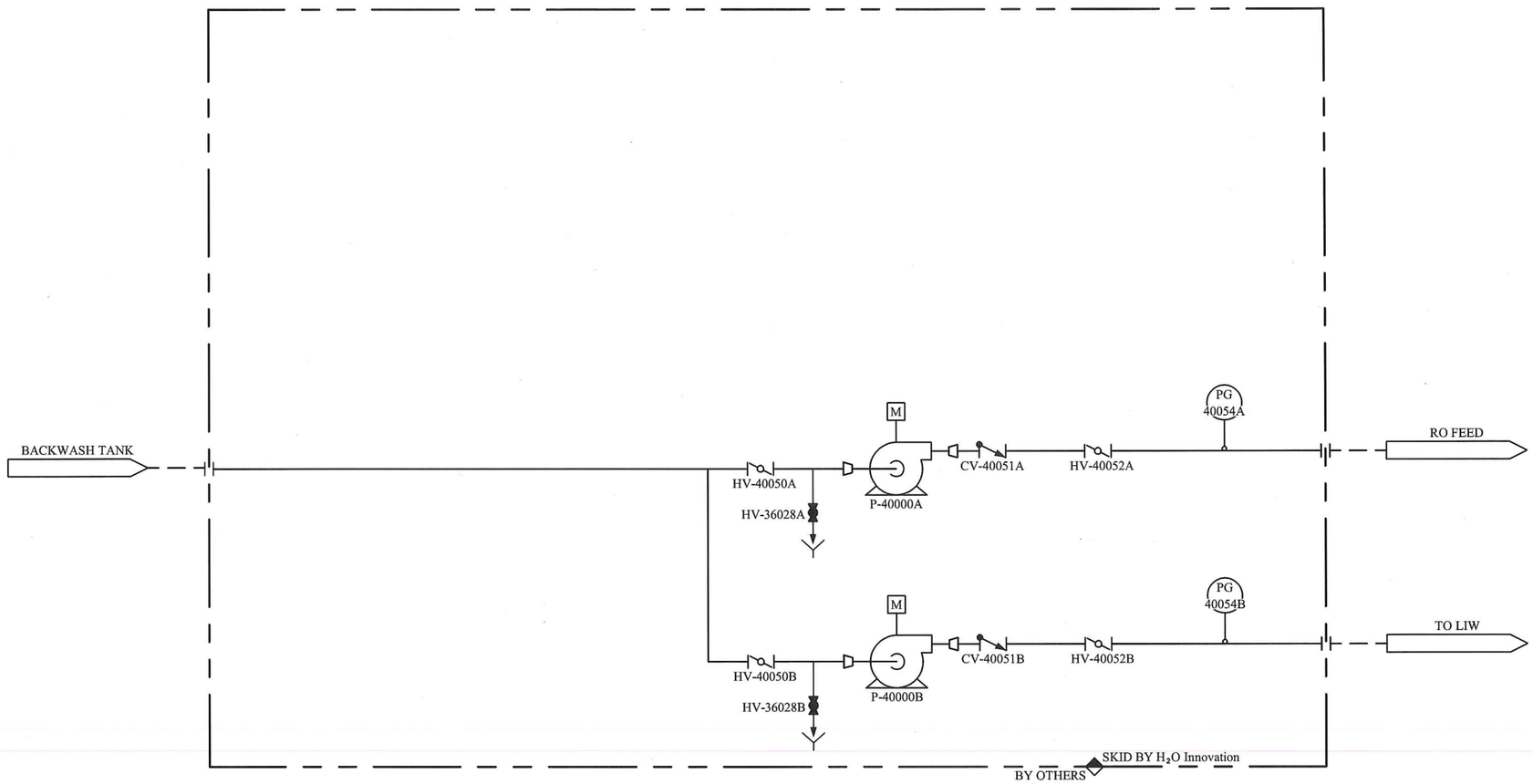

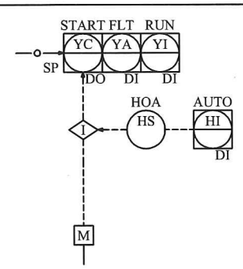

TYPICAL PUMP MOTOR (WITH VFD)

NOTE:
THE INFORMATION, SPECIFICATIONS AND DATA SHOWN ON THIS PRINT ARE FURNISHED BY AND ARE TO REMAIN THE PROPERTY OF H_2O INNOVATION.

THE PURPOSE OF THIS DOCUMENT IS TO FACILITATE THE INSTALLATION, MAINTENANCE AND OPERATION OF THE EQUIPMENT REPRESENTED BY SAID PRINT. NO OTHER USE OF THIS DOCUMENT SHALL BE MADE WITHOUT EXPRESS WRITTEN CONSENT FROM H_2O INNOVATION.

DRAWING REVISION

REV	DATE (DD/MM/YYYY)	REVISION DESCRIPTION	DRAWN	CHKD	ENG	APPVD
A	12/06/2014	PRELIMINARY	M.C	M.B	M.B	-

h2O innovation
knowledge to share.du savoir à partager

UNLESS NOTED OTHERWISE
INTERPRETATION: ANSI Y14.5
TOLERANCES
FRACTIONS: ±1/16"
DECIMALS 0.X: ±0.030
0.XX: ±0.015
ANGLES: ±0.5°
HOLE SIZES: ±1/32"
HOLE CENTERS: ±1/32"
DO NOT SCALE PRINTS

CAMBRIA COMMUNITY SERVICES
DISTRICT EMERGENCY WATER

SUPPLY PROJECT

TITLE:
RO FEED PUMP SKID
PROCESS & INSTRUMENTATION DIAGRAM

SCALE: N/A
DRAWING NUMBER: O-14024-C01-0400
SHEET: 1 of 1
REVISION A

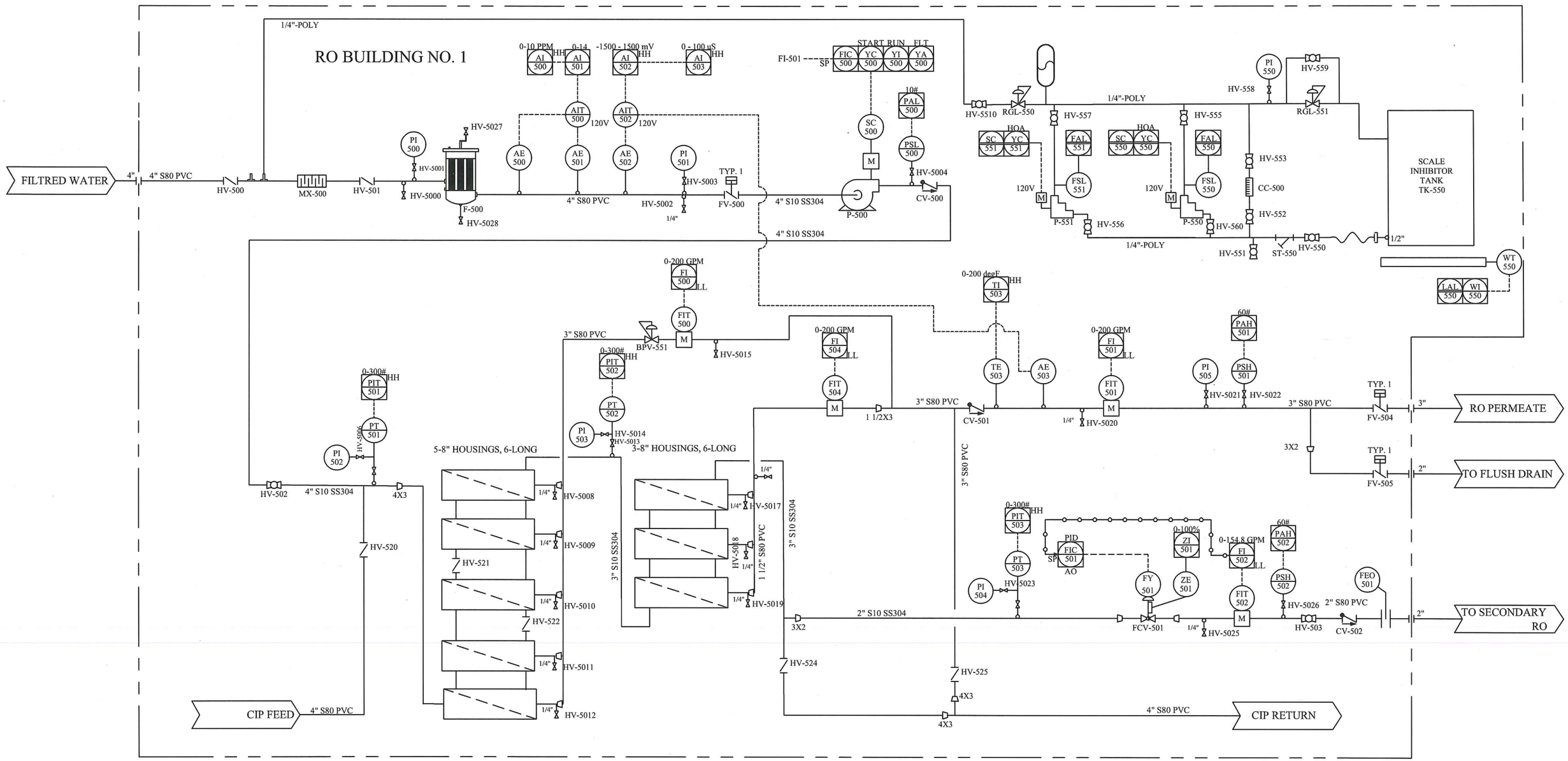

NOTE:
INFORMATION, SPECIFICATIONS AND DATA SHOWN THIS PRINT ARE FURNISHED BY AND ARE TO REMAIN PROPERTY OF h_2o Innovation.

THE ACCEPTOR WARRANTS THAT NO USE WILL BE MADE OF THE SAME EXCEPT TO FACILITATE THE INSTALLATION, NTENANCE AND OPERATION OF THE EQUIPMENT RESENTED BY SAID PRINT.

DRAWING REVISION

REV	DATE	REVISION DESCRIPTION	DRAWN	CHKD	ENG	APPVD
A	12-14	PRELIMINARY	M.C	M.C	M.C	

h2o Innovation

CAMBRIA COMMUNITY SERVICE DISTRICT EMERGENCY

SUPPLY PROJECT

TITLE: RO BLDG. #1 PROCESS & INSTRUMENTATION DIAGRAM

FILE: O-14024-C01-0410
DATE: 7/9/12
SHEET: 1 OF 1
SCALE: N.T.S.

DRAWN BY: M.C
CHECKED: M.B
ENGINEER: M.B
APPROVED:
DRAWING NUMBER: O-14024-C01-0410
REVISION: A 7/9/12

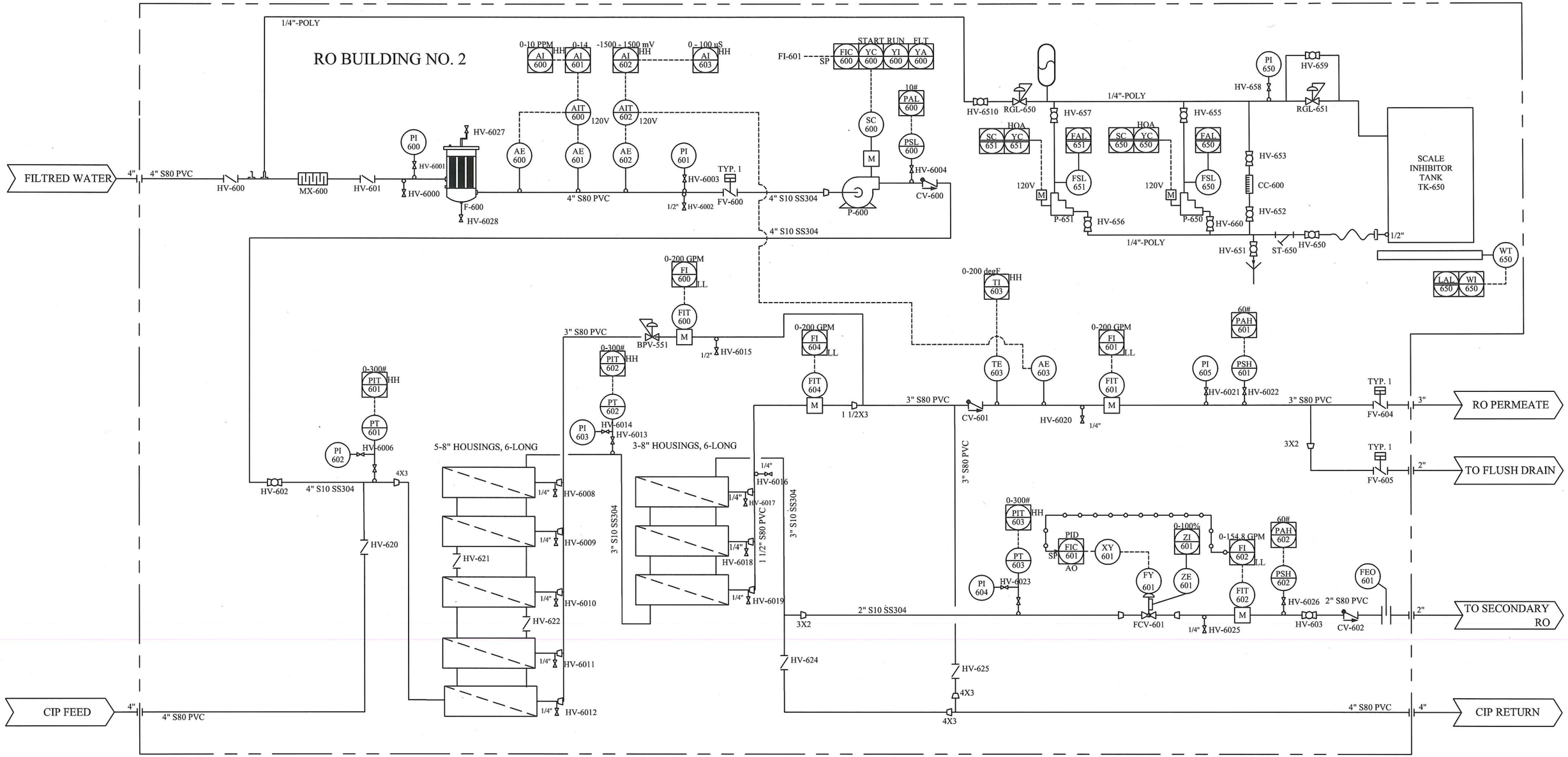

NOTE:
THE INFORMATION, SPECIFICATIONS AND DATA SHOWN ON THIS PRINT ARE FURNISHED BY AND ARE TO REMAIN THE PROPERTY OF h_2o Innovation.

THE ACCEPTOR WARRANTS THAT NO USE WILL BE MADE OF THE SAME EXCEPT TO FACILITATE THE INSTALLATION, MAINTENANCE AND OPERATION OF THE EQUIPMENT PRESENTED BY SAID PRINT.

DRAWING REVISION

REV	DATE	REVISION DESCRIPTION	DRAWN	CHKD	ENG	APPVD
A	12-6	PRELIMINARY	M.C	M.C	M.C	

h2o Innovation

CAMBRIA COMMUNITY SERVICES
DISTRICT EMERGENCY

SUPPLY PROJECT

TITLE: RO. #2 PROCESS & INSTRUMENTATION DIAGRAM

FILE: O-14024-C01-411
DATE: 2014-06-12
SHEET:
SCALE: N.T.S.

DRAWN BY: RMG
CHECKED: GJM
ENGINEER: RMG
APPROVED:
DRAWING NUMBER: O-14024-C01-C01-0411
REVISION: A 7/9/12

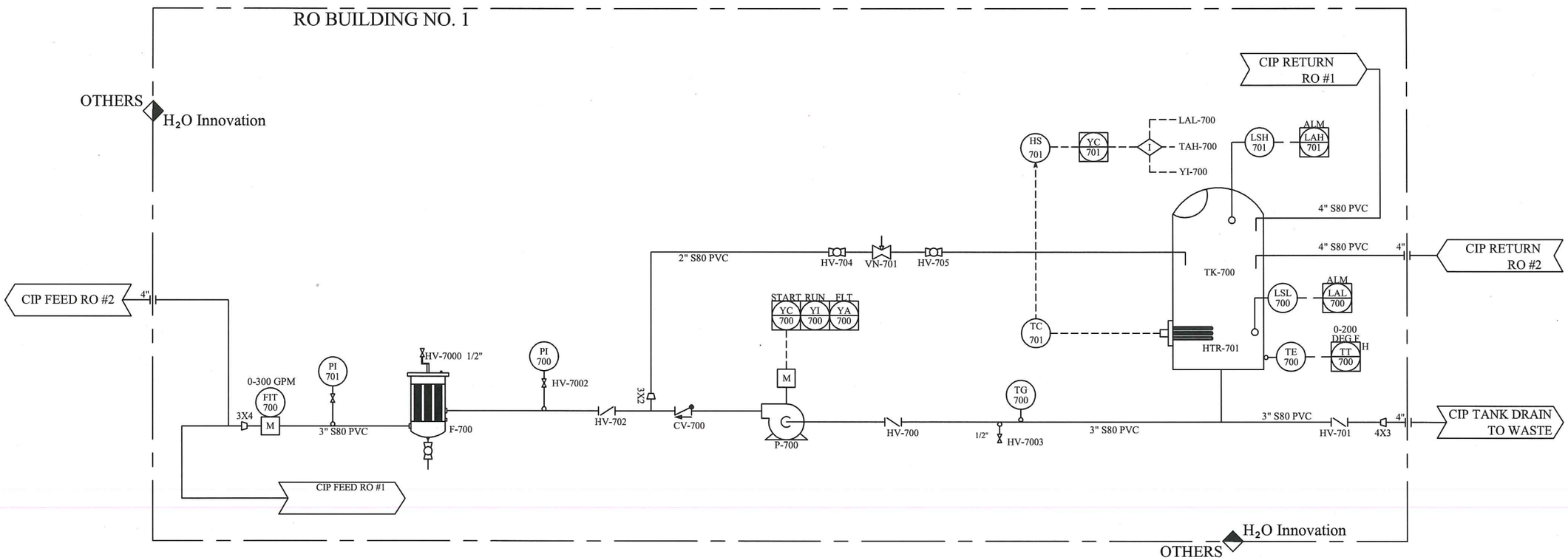

NOTE:
E INFORMATION, SPECIFICATIONS AND DATA SHOWN THIS PRINT ARE FURNISHED BY AND ARE TO REMAIN E PROPERTY OF h_2o Innovation.

THE ACCEPTOR WARRANTS THAT NO USE WILL BE MADE OF THE SAME EXCEPT TO FACILITATE THE INSTALLATION, NTENANCE AND OPERATION OF THE EQUIPMENT RESENTED BY SAID PRINT.

DRAWING REVISION

REV	DATE	REVISION DESCRIPTION	DRAWN	CHKD	ENG	APPVD
A	7/9/12	PRELIMINARY	M.C	M.B	M.B	

h2o innovation

CAMBRIA COMMUNITY SERVICES
EMERGENCY WATER

SUPPLY PROJECT

TITLE: RO CIP SYSTEM PROCESS & INSTRUMENTATION DIAGRAM

FILE: O-14024-C01-470
DATE:
SHEET: 1 OF 1
SCALE: N.T.S.

DRAWN BY: RMG
CHECKED: GJM
ENGINEER: RMG
APPROVED:
DRAWING NUMBER: P12069-C01-12
REVISION: A 7/9/12

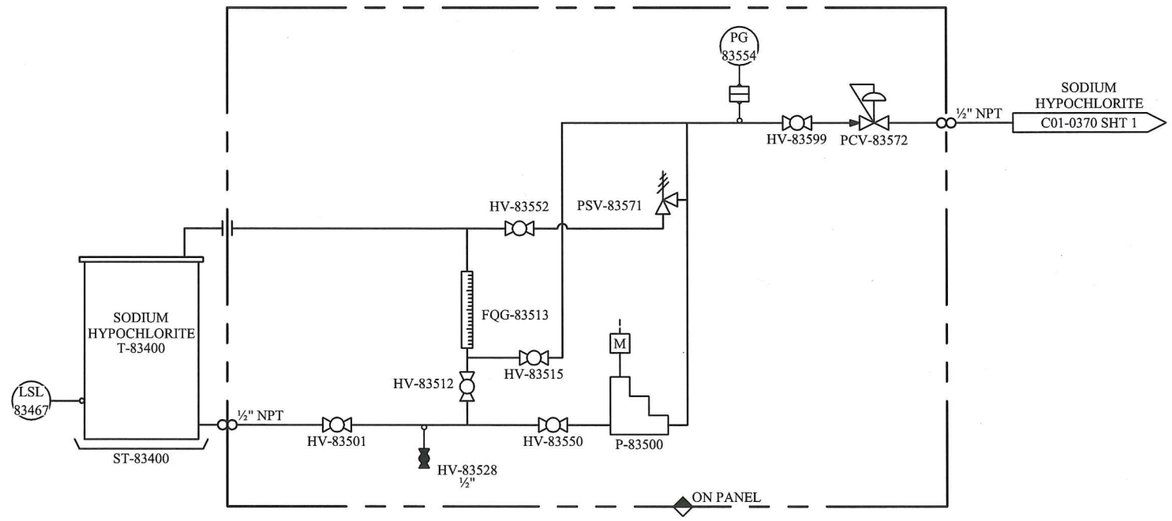

SODIUM HYPOCHLORITE DOSING SYSTEM

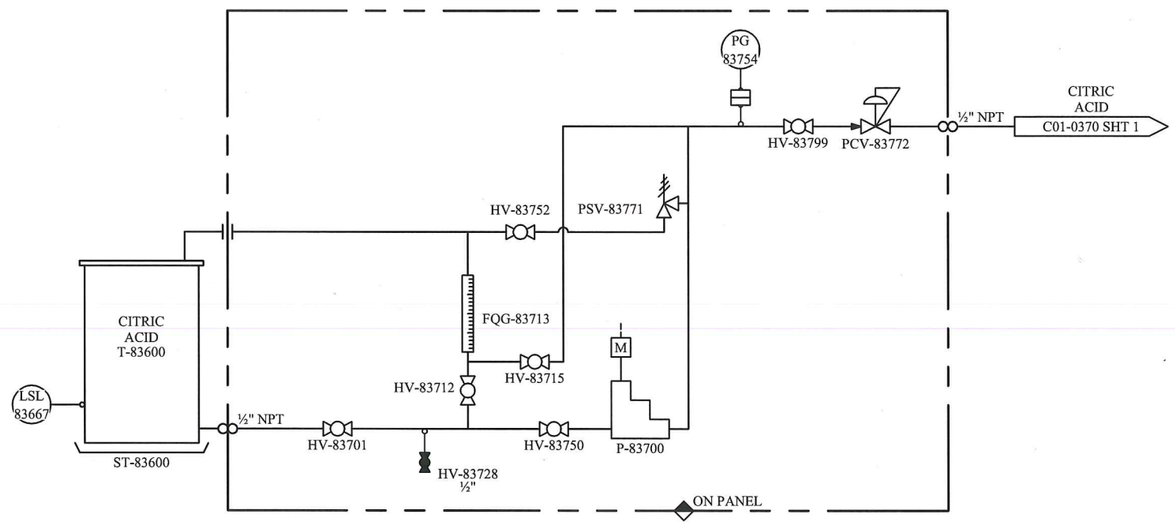

CITRIC ACID DOSING SYSTEM

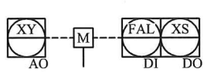

TYPICAL PUMP MOTOR

NOTE:
THE INFORMATION, SPECIFICATIONS AND DATA SHOWN ON THIS PRINT ARE FURNISHED BY AND ARE TO REMAIN THE PROPERTY OF H_2O INNOVATION.

THE PURPOSE OF THIS DOCUMENT IS TO FACILITATE THE INSTALLATION, MAINTENANCE AND OPERATION OF THE EQUIPMENT REPRESENTED BY SAID PRINT. NO OTHER USE OF THIS DOCUMENT SHALL BE MADE WITHOUT EXPRESS WRITTEN CONSENT FROM H_2O INNOVATION.

DRAWING REVISION

REV	DATE (DD/MM/YYYY)	REVISION DESCRIPTION	DRAWN	CHKD	ENG	APPVD
A	12/06/2014	PRELIMINARY	M.C	M.B	M.B	-

h2o innovation
knowledge to share.du savoir à partager

UNLESS NOTED OTHERWISE
INTERPRETATION: ANSI Y 14.5
TOLERANCES:
FRACTIONS: ±1/16"
DECIMALS 0.X: ±0.030
0.XX: ±0.015
ANGLES: ±0.5°
HOLE SIZES: ±1/32"
HOLE CENTERS: ±1/32"
DO NOT SCALE PRINTS

CAMBRIA COMMUNITY SERVICES DISTRICT EMERGENCY

SUPPLY PROJECT

TITLE:
DOSING SKIDS - SINGLE PUMP SKID
PROCESS & INSTRUMENTATION DIAGRAM

SCALE: N/A
DRAWING NUMBER: O-14024-C01-0800
SHEET: 1 of 2
REVISION: A

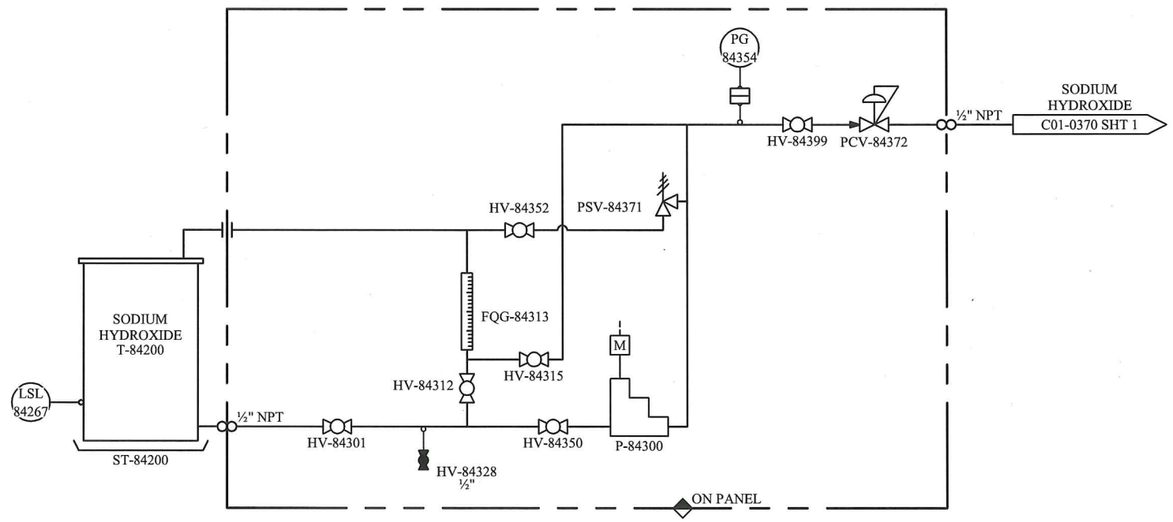

SODIUM HYDROXIDE DOSING SYSTEM

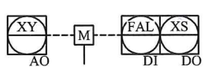

TYPICAL PUMP MOTOR

NOTE:
THE INFORMATION, SPECIFICATIONS AND DATA SHOWN ON THIS PRINT ARE FURNISHED BY AND ARE TO REMAIN THE PROPERTY OF H_2O INNOVATION.

THE PURPOSE OF THIS DOCUMENT IS TO FACILITATE THE INSTALLATION, MAINTENANCE AND OPERATION OF THE EQUIPMENT REPRESENTED BY SAID PRINT. NO OTHER USE OF THIS DOCUMENT SHALL BE MADE WITHOUT EXPRESS WRITTEN CONSENT FROM H_2O INNOVATION.

DRAWING REVISION

REV	DATE (DD/MM/YYYY)	REVISION DESCRIPTION	DRAWN	CHKD	ENG	APPVD
A	12/06/2014	PRELIMINARY	M.C	M.B	M.B	-

h2o innovation
knowledge to share.du savoir à partager

UNLESS NOTED OTHERWISE
INTERPRETATION: ANSI Y14.5
TOLERANCES:
FRACTIONS: ±1/32"
DECIMALS 0.X: ±0.030
0.XX: ±0.015
ANGLES: ±0.5°
HOLE SIZES: ±1/32"
HOLE CENTERS: ±1/32"
DO NOT SCALE PRINTS

CAMBRIA COMMUNITY SERVICES
DISTRICT EMERGENCY

SUPPLY PROJECT

TITLE:
DOSING SKIDS - SINGLE PUMP SKID
PROCESS & INSTRUMENTATION DIAGRAM

SCALE: N/A
DRAWING NUMBER: O-14024-C01-0800
SHEET: 2 of 2
REVISION: A

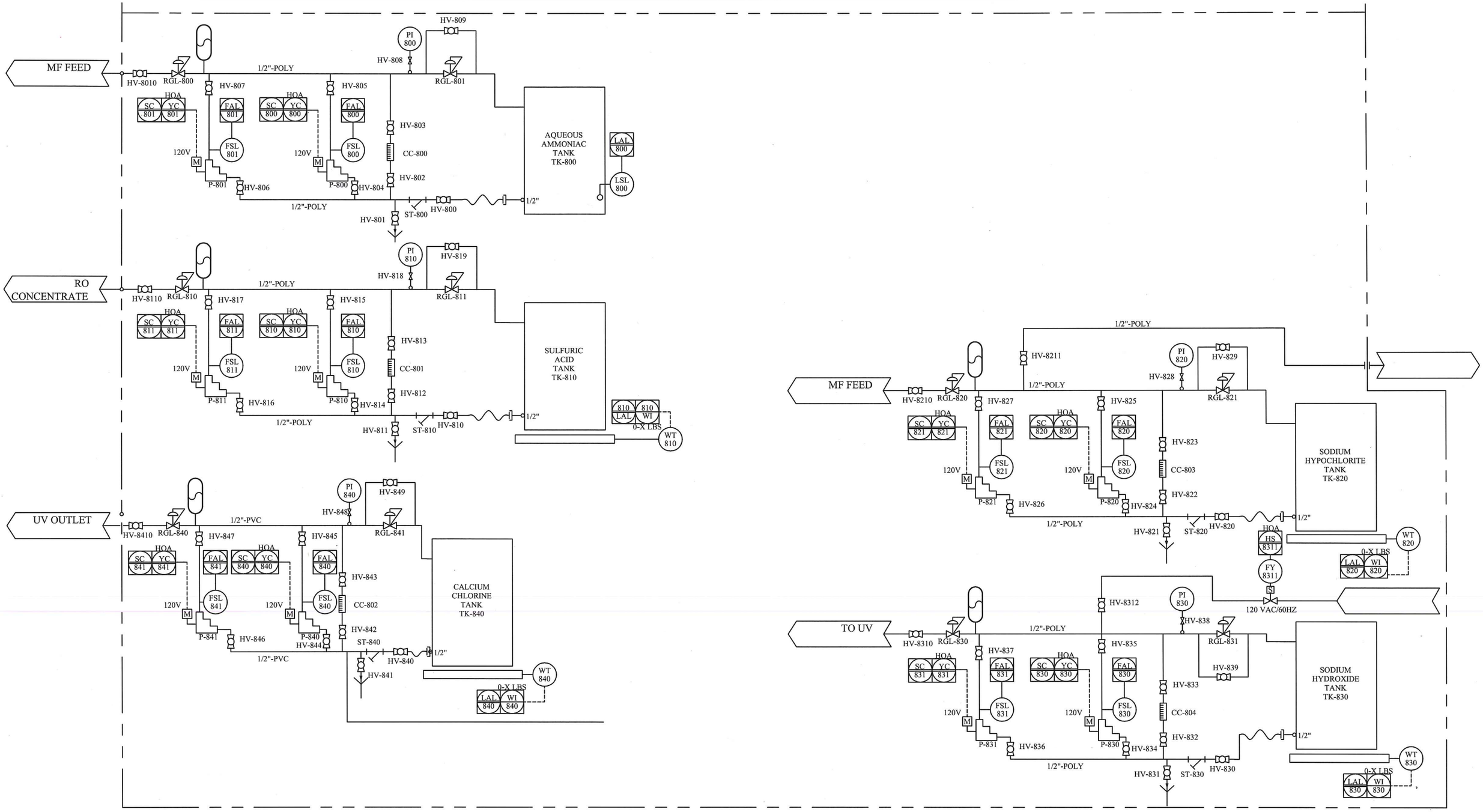

NOTE:
E INFORMATION, SPECIFICATIONS AND DATA SHOWN THIS PRINT ARE FURNISHED BY AND ARE TO REMAIN E PROPERTY OF h_2o Innovation.

THE ACCEPTOR WARRANTS THAT NO USE WILL BE MADE OF THE SAME EXCEPT TO FACILITATE THE INSTALLATION, INTENANCE AND OPERATION OF THE EQUIPMENT PRESENTED BY SAID PRINT.

DRAWING REVISION

REV	DATE	REVISION DESCRIPTION	DRAWN	CHKD	ENG	APPVD
A	06-12	PRELIMINARY	M.C	M.B	M.B	

h2o innovation

CAMBRIA COMMUNITY SERVICES DISTRICT EMERGENCY

SUPPLY PROJECT

TITLE: CHEMICAL TREATMENT BLDG. PROCESS & INSTRUMENTATION DIAGRAM

FILE: O-14024-C01-0410
DATE: 2014-06-12
SHEET: 1 OF 1
SCALE: N.T.S.

DRAWN BY: M.B
CHECKED: M.B
ENGINEER: M.B
APPROVED:
DRAWING NUMBER: O-14024-C01-0810
REVISION: A

NOTE : LOCATED MF CONTAINER

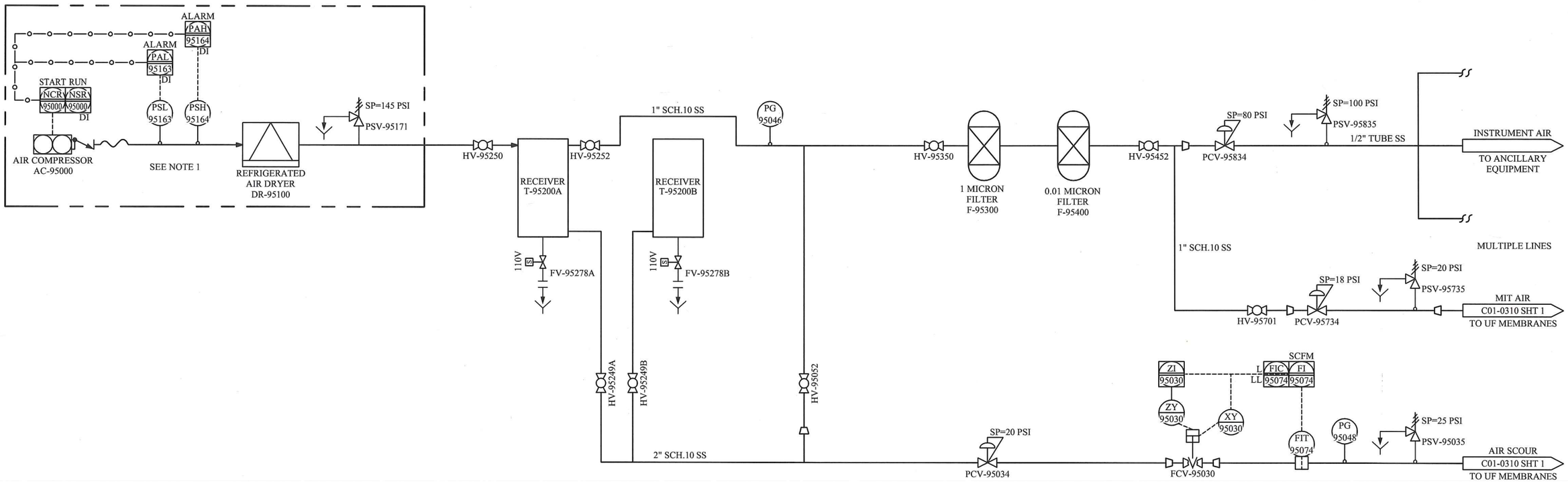

NOTES:

1. ALL THIS EQUIPMENT AND INSTRUMENTATION ARE PROVIDED AS PART OF THE COMPRESSOR PACKAGE.

NOTE:
THE INFORMATION, SPECIFICATIONS AND DATA SHOWN ON THIS PRINT ARE FURNISHED BY AND ARE TO REMAIN THE PROPERTY OF H_2O INNOVATION.

THE PURPOSE OF THIS DOCUMENT IS TO FACILITATE THE INSTALLATION, MAINTENANCE AND OPERATION OF THE EQUIPMENT REPRESENTED BY SAID PRINT. NO OTHER USE OF THIS DOCUMENT SHALL BE MADE WITHOUT EXPRESS WRITTEN CONSENT FROM H_2O INNOVATION.

DRAWING REVISION

REV	DATE (DD/MM/YYYY)	REVISION DESCRIPTION	DRAWN	CHKD	ENG	APPVD
A	12/06/2014	PRELIMINARY	M.C	M.B	M.B	-

h2O innovation
knowledge to share.du savoir à partager

UNLESS NOTED OTHERWISE
INTERPRETATION: ANSI Y14.5
TOLERANCES
FRACTIONS: ±1/4"
DECIMALS 0.X: ±0.030
0.XX: ±0.015
ANGLES: ±0.5°
HOLE SIZES: ±1/64"
HOLE CENTERS: ±1/32"
DO NOT SCALE PRINTS

CAMBRIA COMMUNITY SERVICES
DISTRICT EMERGENCY WATER

SUPPLY PROJECT

TITLE:
AIR COMPRESSOR SYSTEM -
AIR SCOUR & MIT AS SEPARATE LINES
PROCESS & INSTRUMENTATION DIAGRAM

SCALE: N/A
DRAWING NUMBER: P14761-C01-0950
SHEET: 1 of 1
REVISION: A

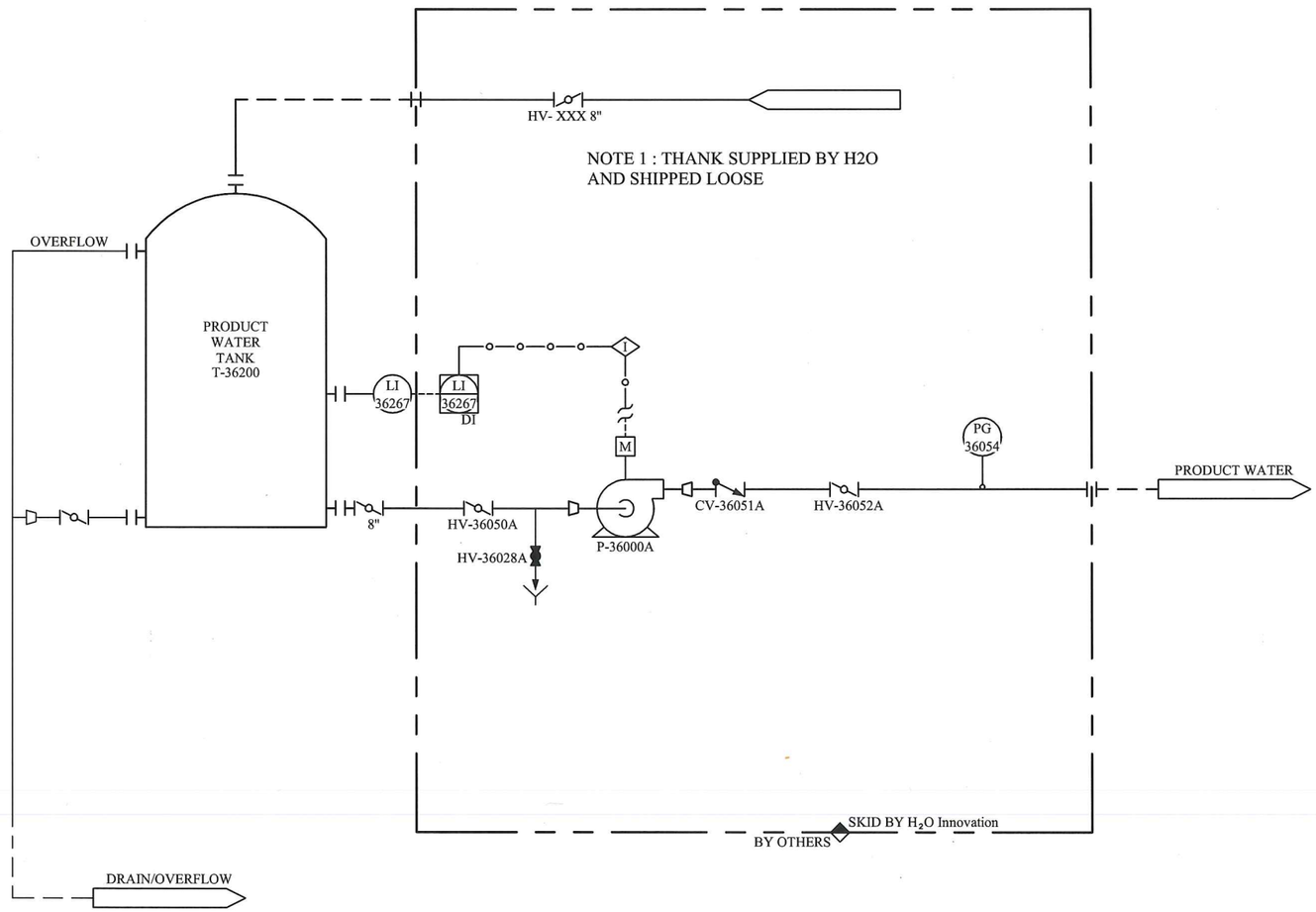

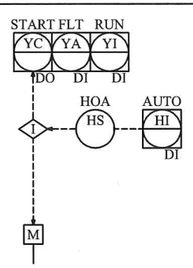

TYPICAL PUMP MOTOR (WITH VFD)

NOTE:
THE INFORMATION, SPECIFICATIONS AND DATA SHOWN ON THIS PRINT ARE FURNISHED BY AND ARE TO REMAIN THE PROPERTY OF H_2O INNOVATION.

THE PURPOSE OF THIS DOCUMENT IS TO FACILITATE THE INSTALLATION, MAINTENANCE AND OPERATION OF THE EQUIPMENT REPRESENTED BY SAID PRINT. NO OTHER USE OF THIS DOCUMENT SHALL BE MADE WITHOUT EXPRESS WRITTEN CONSENT FROM H_2O INNOVATION.

DRAWING REVISION

REV	DATE (DD/MM/YYYY)	REVISION DESCRIPTION	DRAWN	CHKD	ENG	APPVD
A	12/06/2014	PRELIMINARY	-	-	-	-

h2O innovation
knowledge to share.du savoir à partager

UNLESS NOTED OTHERWISE
INTERPRETATION: ANSI Y14.5
TOLERANCES
FRACTIONS: ±1/64"
DECIMALS 0.X: ±0.030
0.XX: ±0.015
ANGLES: ±0.5°
HOLE SIZES: ±1/32"
HOLE CENTERS: ±1/32"
DO NOT SCALE PRINTS

CAMBRIA COMMUNITY SERVICES
DISTRICT EMERGENCY WATER
SUPPLY PROJECT

TITLE:
UF BACKPULSE SYSTEM
PROCESS & INSTRUMENTATION DIAGRAM

SCALE: N/A
DRAWING NUMBER: O-14024-C01-0990
SHEET: 1 of 1
REVISION: A

VENDOR PACKAGE
TROJAN SUPPLY

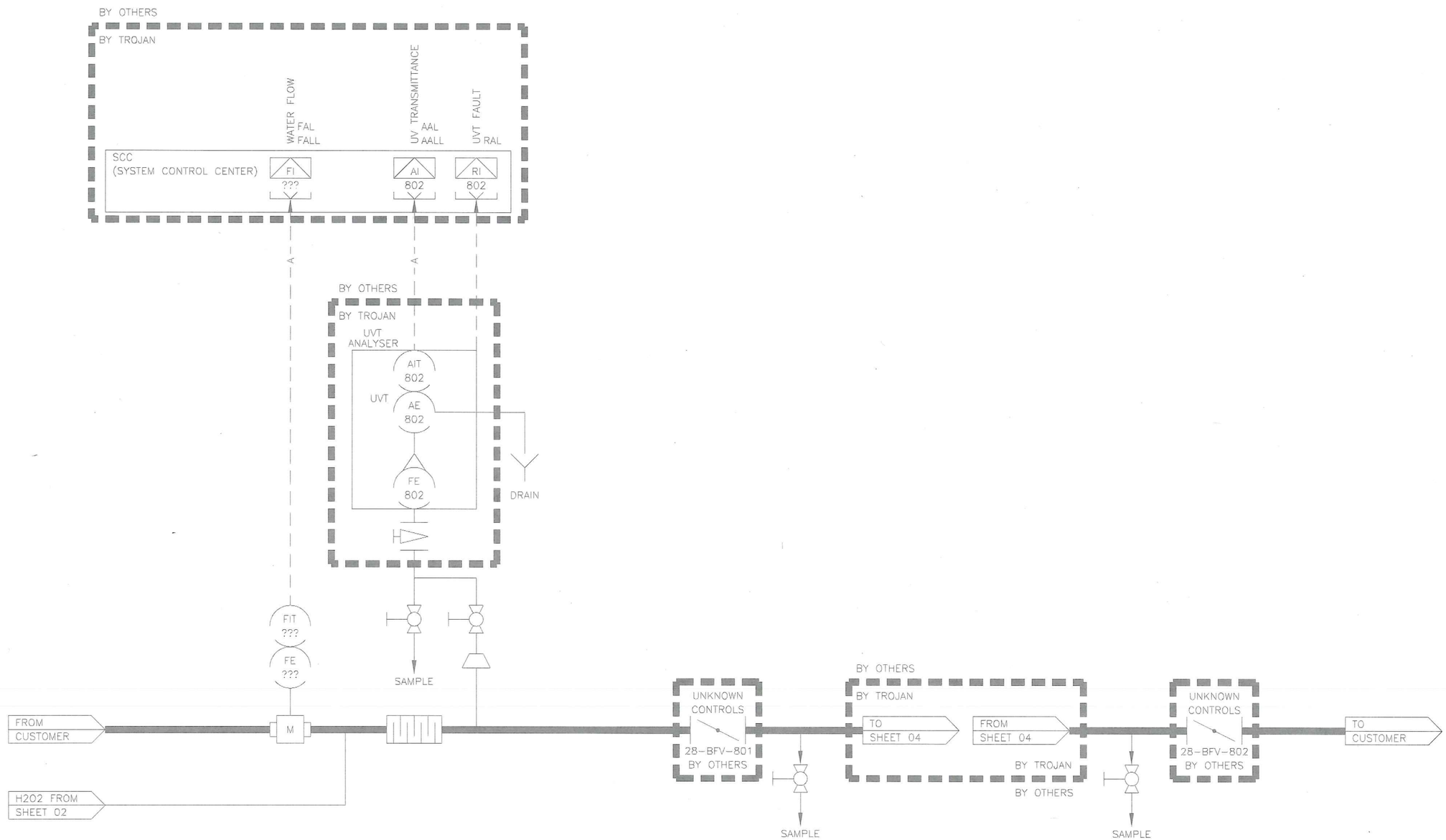

NOTES
1. TROJAN SUPPLY IS LIMITED TO THE UV TREATMENT TRAINS
2. SUPPLY OF ALL OTHER EQUIPMENT IS BY THE CONTRACTOR

TROJANUV

COPYRIGHT © 2011 BY TROJAN TECHNOLOGIES, LONDON, ONTARIO, CANADA. ALL RIGHTS RESERVED. NO PART OF THIS DOCUMENT MAY BE REPRODUCED, STORED IN A RETRIEVAL SYSTEM, OR TRANSMITTED IN ANY FORM, WITHOUT THE WRITTEN PERMISSION OF TROJAN TECHNOLOGIES.

DESCRIPTION	P&ID, DEMO SAN DIEGO CA SYSTEM LAYOUT		
0 0.5 1.0 (1.0" ON ORIGINAL DWG)	REVISED BY HHG	DWG NO. 932277	REV. B
	CHECKED BY MTB		
	APPROVED BY HHG		
SCALE: NTS	APPROVAL DATE YYYY-MM-DD 2011-01-14	SHEET 03 OF 04	SIZE D

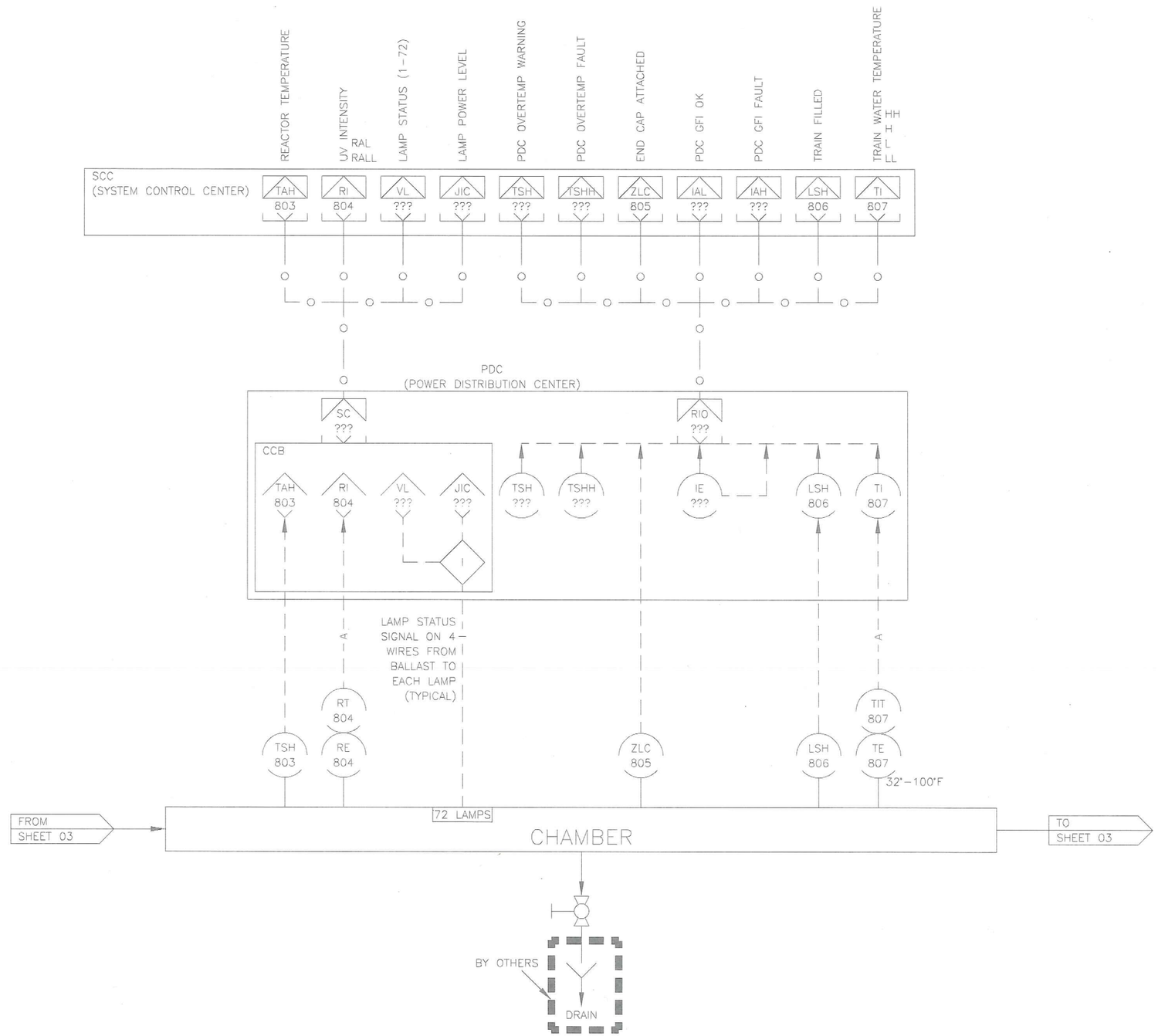

TROJAN UV

COPYRIGHT © 2011 BY TROJAN TECHNOLOGIES, LONDON, ONTARIO, CANADA. ALL RIGHTS RESERVED. NO PART OF THIS DOCUMENT MAY BE REPRODUCED, STORED IN A RETRIEVAL SYSTEM, OR TRANSMITTED IN ANY FORM, WITHOUT THE WRITTEN PERMISSION OF TROJAN TECHNOLOGIES.

DESCRIPTION	P&ID, DEMO SAN DIEGO CA TRAIN LAYOUT		
0 0.5 1.0 / 1.0" ON ORIGINAL DWG	REVISED BY HHG	DWG NO. 932277	REV B
	CHECKED BY MTB		
SCALE: NTS	APPROVED BY HHG		
	APPROVAL DATE YYYY-MM-DD 2011-01-14	SHEET 04 OF 04	SIZE D

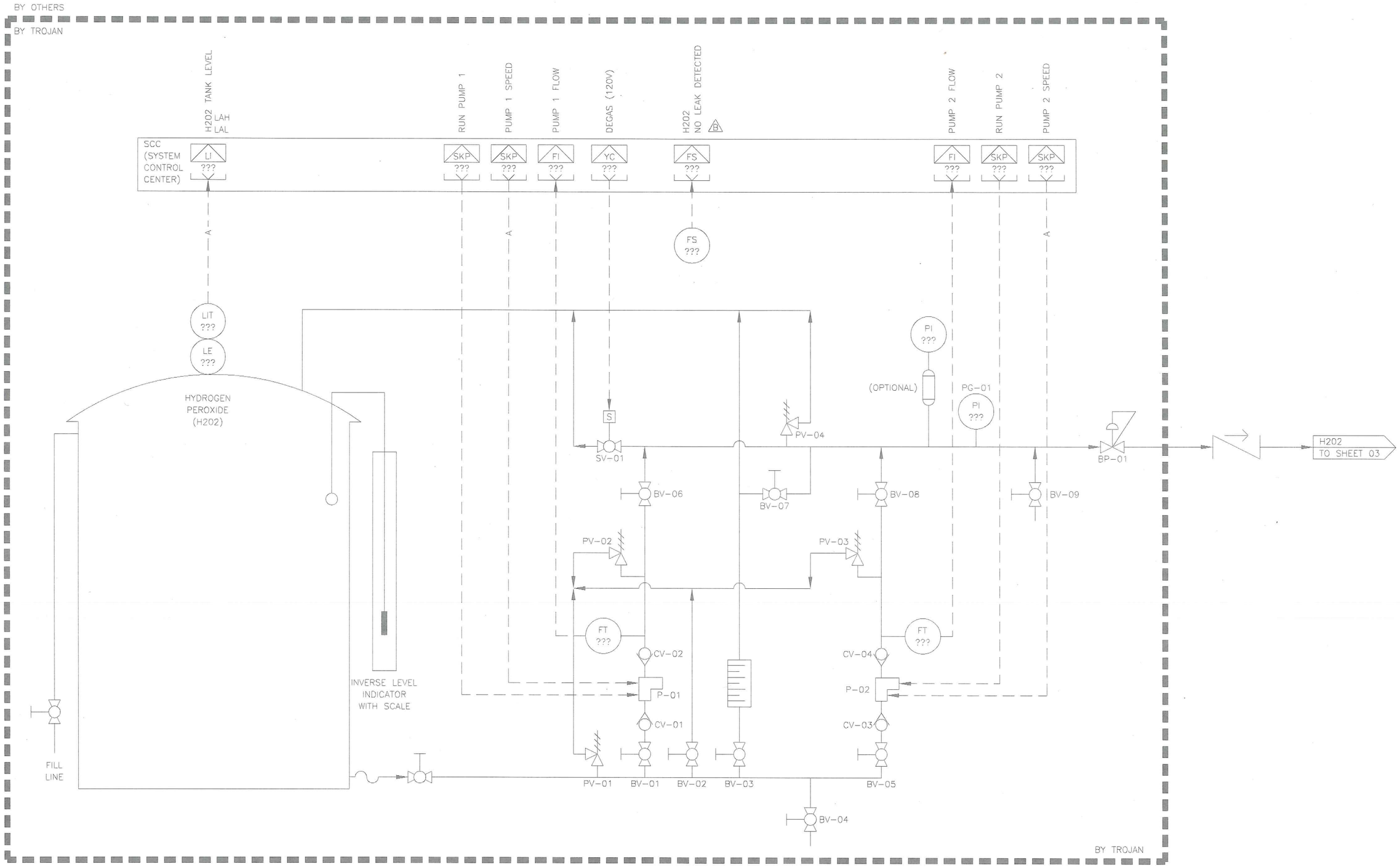

TROJANUV

COPYRIGHT © 2011 BY TROJAN TECHNOLOGIES, LONDON, ONTARIO, CANADA. ALL RIGHTS RESERVED. NO PART OF THIS DOCUMENT MAY BE REPRODUCED, STORED IN A RETRIEVAL SYSTEM, OR TRANSMITTED IN ANY FORM, WITHOUT THE WRITTEN PERMISSION OF TROJAN TECHNOLOGIES.

DESCRIPTION: P&ID, DEMO SAN DIEGO CA
SYSTEM LAYOUT

REVISED BY	HHG	DWG NO.	REV
CHECKED BY	MTB	932277	B
APPROVED BY	HHG		
APPROVAL DATE YYYY-MM-DD	2011-01-14	SHEET 02 OF 04	SIZE D

0 0.5 1.0
1.0" ON ORIGINAL DWG
SCALE: NTS

Appendix B
Specifications

Working Document

11-UV Arrangement-HH-060914-V001

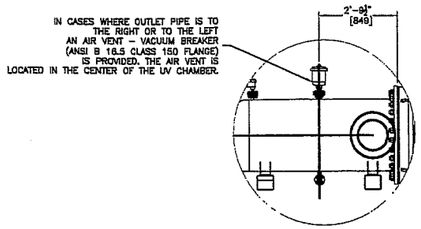

VENT
SCALE: NOT TO SCALE

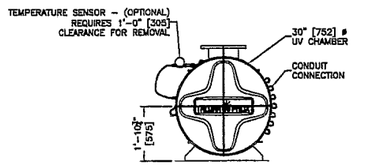

OUTLET END VIEW
SCALE: NOT TO SCALE

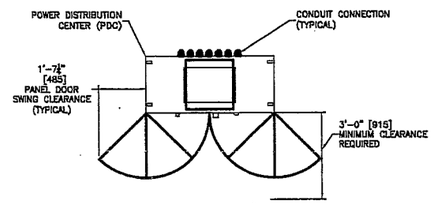

PLAN VIEW OF PDC
SCALE: NOT TO SCALE

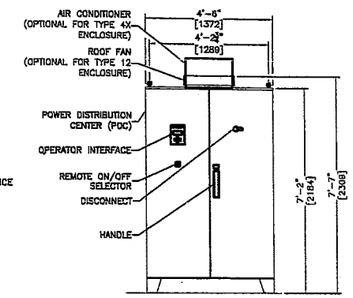

FRONT VIEW OF PDC
SCALE: NOT TO SCALE

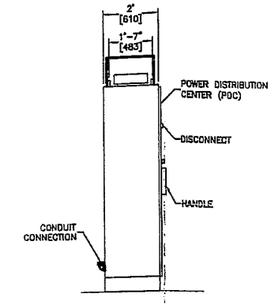

LEFT VIEW OF PDC
SCALE: NOT TO SCALE

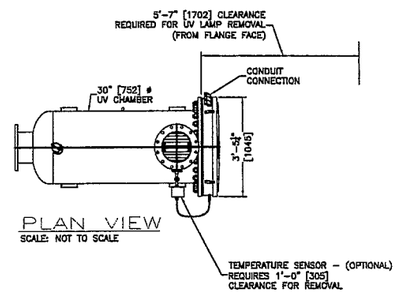

PLAN VIEW
SCALE: NOT TO SCALE

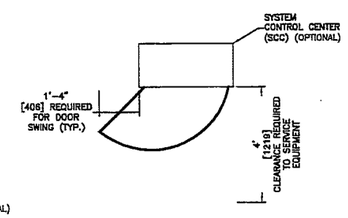

PLAN VIEW OF SCC
SCALE: NOT TO SCALE

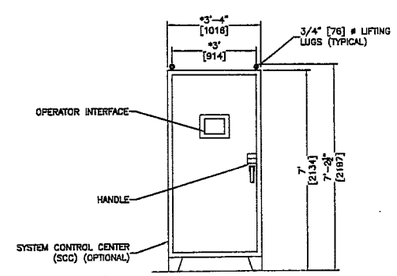

FRONT VIEW OF SCC
SCALE: NOT TO SCALE

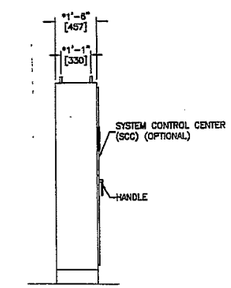

LEFT VIEW OF SCC
SCALE: NOT TO SCALE

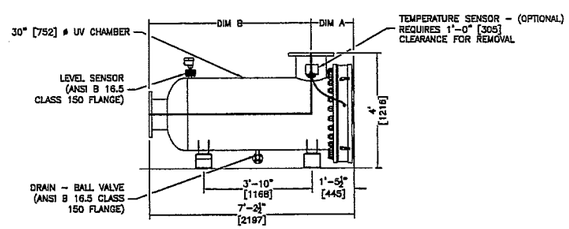

FRONT VIEW
SCALE: NOT TO SCALE

NOTES:

: MAXIMUM OPERATING PRESSURE TO BE 65 psi [4.5 BAR].
: INTERCONNECTING CABLE LENGTH TO BE 12 FT. [3658mm] FROM CONDUIT CONNECTOR ON UV CHAMBER END CAP TO CONDUIT CONNECTOR ON PDC.
: INLET/OUTLET GASKETS AND HARDWARE TO BE SUPPLIED BY CUSTOMER.
: INLET/OUTLET AWWA C207 CLASS D FLANGE.
: HEAT EXCHANGER OR ROOF FANS ARE AVAILABLE METHODS FOR COOLING ON PDC. HEAT EXCHANGER SHOWN FOR CLARITY.
: 72AL75 CHAMBER WEIGHT DRY 2100 lbs. [953 kg.] / WET 3700 lbs. [1678 kg.]
: PDC WEIGHT 800 lbs [362 kg.]
: UV CHAMBER MATERIAL TO BE 316 STAINLESS STEEL.
: POWER DISTRIBUTION CENTER TO BE PAINTED MILD STEEL (STANDARD) 304 SST (OPTIONAL).
: SCC MATERIAL TO BE MILD STEEL (STANDARD) OR 304 SST (OPTIONAL) OR 316L SST (OPTIONAL).
: INLET AND OUTLET PIPES CAN BE FROM LEFT OR RIGHT ORIENTATIONS. TOP AND BOTTOM PIPE ORIENTATIONS ARE SHOWN FOR CLARITY ONLY.
: SCC TO PDC WIRING MAXIMUM DISTANCE OF 1000 ft. [304.8m] REQUIRING A FIBER OPTIC CABLING – ALL OTHER WIRING HAS A MAXIMUM DISTANCE OF 300 ft. [91.4m].
* INDICATES DIMENSIONS ARE SUBJECT TO CHANGE BASED ON PROJECT SPECIFIC REQUIREMENTS.

INLET / OUTLET PIPE SIZE (SS)	DIM A	DIM B
8	1'-4" [402]	5'-11" [1805]
12	1'-6" [454]	5'-9" [1753]
16	1'-7½" [496]	5'-7½" [1711]
20	1'-9½" [546]	5'-5½" [1660]

TROJAN UV

CONFIDENTIALITY NOTICE
Copyright 2012 by Trojan Technologies. All rights reserved. No part of this document may be reproduced, stored in a retrieval system, or transmitted in any form, without the written permission of Trojan Technologies.

DESCRIPTION: STD. TROJANUVPHOx 72AL75 SYSTEM – NON WIPING		STANDARD DRAWING NO. PH0007
DRAWN BY : CAR/CMS/MVW	DATE : 12AU28	REFERENCE NO. N/A
CHECKED BY : SAH	DATE : 12DE17	DWG NO. 001 / REV. C
APPROVED BY : SLO	DATE : 12DE18	
SCALE (11x17) : NOT TO SCALE	LOG NUMBER : N/A	

APPENDIX 3-3D – CCSD'S GROUNDWATER MODELING REPORT

Cambria Community
Services District

Cambria Emergency Water Supply Project

San Simeon Creek Basin Groundwater Modeling Report

Cambria, California

May 2014

CDM Smith

The information contained in the document titled "Cambria Emergency Water Supply Project San Simeon Creek Basin Groundwater Modeling Report" dated May 2014 has received appropriate technical review and approval. The conclusions and recommendations presented represent professional judgments and are based upon findings from the investigations and sampling identified in the report and the interpretation of such data based on our experience and background. This acknowledgement is made in lieu of all warranties, either expressed or implied. The activities outlined in this report were performed under the supervision of a California Registered Professional Engineer.

Prepared by:

Michael Smith, P.G.
Technical Director

Reviewed and Approved by:

Sava Nedic, PE, PMP, BCEE
Project Manager

REGISTERED PROFESSIONAL ENGINEER
SAVA S. NEDIC
C 053455
Ex. 06/13/2015
CIVIL
STATE OF CALIFORNIA

Sava Nedic, PE, PMP, BCEE
Project Manager

Contributing Authors

Mike Smith
Mike Hoffman
Mark McCluskey
Sava Nedic
Whitney Treadway

Technical Advisors QA/QC Review

Robert Fitzgerald
Gus Yates, Todd Groundwater

Graphics and Production

Wendy Coyne
Juan Ramirez
Kimberly Scheller

Table of Contents

Section 1 Introduction 1-1
1.1 General Setting 1-1
1.2 Study Objectives 1-1

Section 2 Conceptual Model 2-1
2.1 Aquifer System Framework 2-1
2.2 Groundwater Occurance and Flow 2-2
2.3 Hydraulic Properties 2-2
2.4 Boundary Conditions 2-3
2.4.1 Recharge 2-3
2.4.1.1 Recharge from Precipitation 2-3
2.4.1.2 Recharge from Irrigation Return Flows 2-4
2.4.1.3 Lateral Boundary Inflow 2-4
2.4.1.4 Stream Channel Seepage 2-4
2.4.1.5 Waste Water Percolation Pond Recharge 2-4
2.4.2 Discharge 2-4
2.4.2.1 Municipal Pumping 2-4
2.4.2.2 Agricultural Pumping 2-4
2.4.2.3 Evapotranspiration from Groundwater 2-5
2.4.2.4 Discharge to Surface Water 2-5
2.5 Water Budget 2-5

Section 3 Computer Model Code Selection 3-1

Section 4 Ground-Water Flow Model Construction 4-1
4.1 Model Grid 4-1
4.2 Hydraulic Parameters 4-1
4.3 Boundary Conditions 4-2
4.3.1 Recharge Package 4-2
4.3.2 Stream Flow Routing Package 4-3
4.3.3 Lake (Fresh Water Lagoon) Package 4-3
4.3.4 Constant Head Package 4-3
4.3.5 Well Package 4-4
4.4 Transport Packages 4-4
4.5 Selection of Calibration Targets 4-4

Section 5 Calibration 5-1
5.1 Model Calibration 5-1
5.2 Calibration results 5-1
5.3 Water Budget 5-2
5.4 Sensitivity Analysis 5-3
5.5 Model Uncertainties and Limitations 5-3

Section 6 Alternatives Analysis 6-1
6.1 Emergency Alternative 1 (Direct Potable Supply) 6-1
6.2 Emergency Alternative 2 (Direct Potable Supply) 6-2
6.3 Emergency Alternative 3 (Indirect Potable Reuse) 6-2

6.4 Emergency Alternative 4 (Indirect Potable Reuse) 6-3
6.5 Emergency Alternative Recommendation 6-6
6.7 Conclusions 6-6

Section 7 References 7-1

List of Figures

Figure 1-1 Location of Study Area with Significant Site Features 1-3
Figure 2-1 Location of Wells and Borings with Lithologic Data 2-7
Figure 2-2 Geologic Longintudinal-Section of San Simeon Valley Alluvium 2-9
Figure 2-3 Geologic Map of the San Simeon Creek Area 2-11
Figure 2-4 Interpreted Bedrock Surface Elevation Below the San Simeon Basin Alluvial Aquifer 2-13
Figure 2-5 Generalized Water Table-Winter 1989 2-15
Figure 2-6 Location of Aquifer Tests 2-17
Figure 2-7 Hydraulic Conductivity Statistical Distribution 2-19
Figure 2-8 Precipitation and Cumulative Departure from the Long Term Average at San Luis Obispo-Poly Station 2-21
Figure 2-9 Streamflow in San Simeon Creek and Groundwater Level Hydrographs in the 2001-2002 Period 2-23
Figure 2-10 Percolation Pond Discharge 2009-2013 2-25
Figure 2-11 San Simeon Basin Well Field Pumping 2009-2013 2-27
Figure 2-12 Location of Surface Water-February 2012 2-29
Figure 4-1 Model Grid 4-7
Figure 4-2 Detail Area Showing Model Grid 4-9
Figure 4-3 Upper Zone Hydraulic Conductivity Distribution 4-11
Figure 4-4 Middle Zone Hydraulic Conductivity Distribution 4-13
Figure 4-5 Deep Zone Hydraulic Conductivity Distribution 4-15
Figure 4-6 Location of Wastewater Percolation ponds 4-17
Figure 4-7 San Simeon Creek, 9K2 and 9L1 Hydrographs 4-19
Figure 4-8 Location of Stream and Lake Boundary conditions 4-21
Figure 4-9 Location of Constant Head Boundary Conditions 4-23
Figure 4-10 Location of Pumping Wells 4-25
Figure 4-11 Location of Wells with Water Level Measurements 4-27
Figure 5-1 Specific Yield Sensitivity Analysis 5-5
Figure 5-2 Comparison of Modeled and Field Measured Water Levels During the 2001-2002 Calibration Period 5-7
Figure 5-3 Histogram of Model Residuals 5-9
Figure 5-4 Observed and Modeled Hydrographs at Well 10A1 5-11
Figure 5-5 Observed and Modeled Hydrographs at Well 10F2 5-13
Figure 5-6 Observed and Modeled Hydrographs at Well 10G1 5-15
Figure 5-7 Observed and Modeled Hydrographs at Well 10G2 5-17
Figure 5-8 Observed and Modeled Hydrographs at Well 10M2 5-19
Figure 5-9 Observed and Modeled Hydrographs at Well 9J3 5-21
Figure 5-10 Observed and Modeled Hydrographs at Well 9K1 5-23
Figure 5-11 Observed and Modeled Hydrographs at Well 9K2 5-25
Figure 5-12 Observed and Modeled Hydrographs at Well 9L1 5-27
Figure 5-13 Observed and Modeled Hydrographs at Well SS4 5-29

Figure 5-14 Observed and Modeled Hydrographs at Well 9P2 5-31
Figure 5-15 Observed and Modeled Hydrographs at Well 16D1 5-33
Figure 6-1 Emergency Alternative 1 Summary 6-7
Figure 6-2 Simulated Extent of Treated Wastewater After 270 Days of Operation 6-9
Figure 6-3 Emergency Alternative 2 Summary 6-11
Figure 6-4 Emergency Alternative 3 Summary 6-13
Figure 6-5 Emergency Alternative 4 Summary 6-15
Figure 6-6 Simulated Tracer Extent at 30 Days-Emergency Alternative 6-17
Figure 6-7 Simulated Tracer Extent at 60 Days-Emergency Alternative 6-19
Figure 6-8 Simulated Tracer Extent at 90 Days-Emergency Alternative 6-21
Figure 6-9 Simulated Tracer Extent at 120 Days-Emergency Alternative 6-23
Figure 6-10 Simulated Tracer Extent at 150 Days-Emergency Alternative 6-25
Figure 6-11 Simulated Tracer Extent at 180 Days-Emergency Alternative 6-27
Figure 6-12 Simulated Tracer Extent at 210 Days-Emergency Alternative 6-29
Figure 6-13 Simulated Water Levels After One Year of Operations 6-31
Figure 6-14 Simulated Tracer Breakthrough at Wells SS1 and SS2 6-33
Figure 6-15 Simulated Shallow Water Table Adjacent to Fresh Water Lagoon 6-35
Figure 6-16 Simulated Basin Storage Depletion and Ocean Inflows and Outflows 6-37
Figure 6-17 TDS profile from Well Samples 6-39
Figure 6-18 Simulated TDS at Brackish Extraction Well 6-41

List of Tables

Table 2-1 Alluvial Aquifer Annual Water Budget Estimates from 1988 USGS Study 2-6
Table 5-1 Summary of Water Budget Components for 2001-2002 Calibration Period 5-2

This page intentionally left blank.

Acronyms/Abbreviations

AF	acre-feet
CCSD	Cambria Community Services District
MGD	million gallons per day
MSL	mean sea level
NAVD 1988	North American Vertical Datum
NOAA	National Oceanic and Atmospheric Administration
TDS	total dissolved solids
USGS	Unites States Geological Survey
VDF	Variable-Density Flow Process
WRIR	Water Resources investigation Report

This page intentionally left blank.

Section 1
Introduction

1.1 General Setting

This investigation is being conducted for the Cambria Community Services District (CCSD), which provides water, and collects and treats wastewater for the town of Cambria and adjacent service areas. The area of specific interest in this investigation is the lower portion of the San Simeon Creek valley, extending about 3.5 miles upstream from the Pacific Ocean. The study area and major features are shown on **Figure 1-1**.

The study area includes areas underlain by a significant alluvial aquifer along San Simeon Creek, including the Van Gordon Creek tributary. Near the headwaters, the creek valley forms a steep, narrow canyon. Along the final three to five miles before reaching the ocean, the valley widens to a floodplain that is up to approximately one thousand feet wide. The floodplain is underlain by the groundwater basin and is flanked by steep hillsides that rise 200 to 800 feet above the valley floor. A fresh water lagoon is present in the lower portion of the valley that serves as an important ecological resource. This lagoon forms behind an ocean beach berm and is supported by groundwater discharge and surface water inflows.

CCSD and agricultural water users along San Simeon Creek use wells in the alluvial aquifer. Groundwater occurs in the alluvial deposits beneath the creek, which drains the western flanks of the Santa Lucia Range in San Luis Obispo County and discharges into the Pacific Ocean. The alluvial deposits form flat valley floors, which are used for irrigated agriculture. The alluvial aquifer is recharged primarily by seepage from San Simeon Creek, which typically flows during the winter and spring rainy season.

The CCSD has a well field consisting of four potable water supply wells located approximately one mile inland from the ocean. They also utilize a series of percolation ponds between the well field and the ocean where secondary treated waste water is recharged back to the aquifer. Pumping during the dry season results in seasonal declines in groundwater levels since production is supported by removal of water from storage in the aquifer when the stream is not flowing.

Numerous private wells are present that irrigate farmlands on flat areas adjacent to the creek bottoms. Native vegetation consists of trees, grass, and shrubs that grow along the creeks and field borders. Grassy hillsides along the sides of the valleys are used for grazing. San Simeon State Park occupies the western extent of the basin and includes a large campground, which obtains its water supply from the CCSD.

1.2 Study Objectives

Extended drought conditions in the central coastal area of California have persisted over the past year, which have resulted in a limited water supply for the CCSD well field. Studies have been ongoing to identify additional water sources for the CCSD including indirect potable reuse of the percolated secondary effluent. However, the persistent drought conditions have elevated concern on availability of a reliable water supply since water levels continue to decline as aquifer storage is depleted. This groundwater modeling study has been developed to support evaluation of the basin water management alternatives to develop additional water supplies for CCSD to meet the emergency

conditions. The specific objectives of this San Simeon Basin Groundwater Modeling study are provided below.

1. Develop a groundwater model that is consistent with data from the United States Geological Survey (USGS) WRIR 98-4061 model (Yates and Van Konyenburg, 1998) and the 2007 modeling analysis (Yates, 2007) to allow assessment of potential emergency water supply alternatives focusing on recovery of brackish basin water near the current percolation ponds.
2. The evaluation will consider the impacts of vertical flow and density driven flow in the evaluation of alternatives.
3. The evaluation will assess residence times prior to recovery of treated wastewater effluent as part of the alternatives evaluation.
4. The model will evaluate impacts of emergency water supply alternatives on San Simeon Creek, and the fresh water lagoon area.

The evaluation will be based on available existing data, as supplemented by stream elevation survey and select water quality data that are currently being collected.

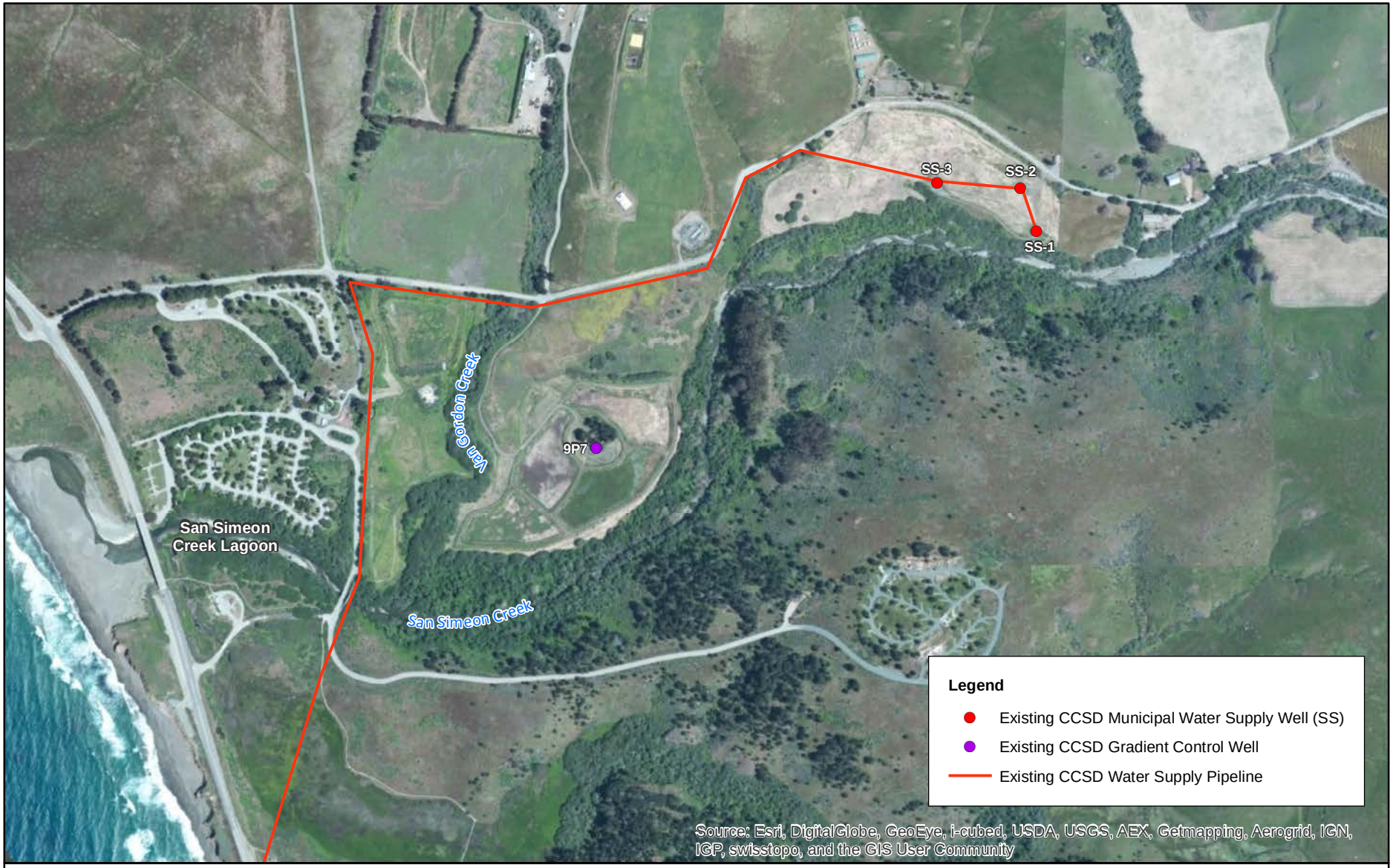

0 250 500 1,000
Feet

Cambria Emergency Water Supply Project
TO1: Geo-Hydrological Model

Figure 1-1
Location of Study Area with Significant Site Features

CDM Smith

ramirezjj O:\51115_USACE-KansasCity\102849\Figure1-1_Location of Study Area with Significant Site Features.mxd 4/28/2014

This page intentionally left blank.

Section 2
Conceptual Model

The basin conceptual model documents the current understanding of the aquifer system at the site and includes the data that are available to support this interpretation. This site conceptual model is based on the 1998 USGS report (Yates and Van Konynenburg, 1998), supplemented by additional data that have been collected since the late 1980s. This conceptual model is used to support development of the groundwater model that will be used for assessment of emergency water supply alternatives. Subsequent sections describe the nature and extent of the aquifer system, sources of recharge and discharge, current aquifer use and a water budget.

2.1 Aquifer System Framework

The aquifer system framework describes the physical configuration of the alluvial aquifer, including its areal extent, thickness and the lithology of the aquifer materials. The alluvial aquifer in the San Simeon valley consists of sands and gravels with interbedded finer grain lithologies filling the bedrock valley of San Simeon Creek and the lower portion of Van Gordon Creek. This alluvial aquifer extends to approximately elevation -120 feet or deeper in its western extent, and likely extends to the off-shore area, since the extent of the bedrock valley was influenced by lower sea level elevations in the geologic past.

Figure 2-1 shows the location of wells and borings for which geologic information is available, with the path of the cross-section provided on **Figure 2-2**, which show information based on boring logs, with generalized interpretation of lithology between the boring locations. The alluvium west of the confluence with Van Gordon Creek contains a larger percentage of fine grain material interbedded with more permeable zones and may act as a confining to semi-confining unit for the deeper zones.

Figure 2-3 provides a geologic map produced by the US Geological Survey (Hall, et. al., 1979). This map shows the extent of alluvial deposits in the San Simeon valley and adjacent areas, along with the bedrock geology. Several faults have been mapped or inferred in the bedrock units, however, the USGS concluded that they do not impact the alluvial deposits, so they are not expected to impact the hydrogeology of the alluvial aquifer (Yates and Van Konynenburg, 1998).

The Hosgri fault zone is located sub-parallel to the coastline is this area and is about two miles off-shore. This zone was identified as seismically active (Yates and Van Konynenburg, 1998). However, due to its distance from the San Simeon valley alluvial aquifer, it is not anticipated to impact the hydrology of the basin.

Bedrock units consist of highly fractured Franciscan rocks that are hydraulically connected to the alluvial basin, however, their permeability is much lower than the alluvial aquifer and the bedrock has a limited role in the hydrology of the basin, providing a limited amount of recharge to the alluvium that is described in a later section.

Figure 2-4 shows the elevation of the bedrock surface that was interpreted from borings in the basin in the 1998 USGS report (Yates and Van Konynenburg, 1998). This bedrock surface forms the lower boundary of the alluvial groundwater system.

2.2 Groundwater Occurance and Flow

The alluvium in the San Simeon basin is saturated, with groundwater near the ground surface at its western extent. During the periods when water is present in San Simeon Creek, groundwater levels are similar to those observed in the creek. The depth to groundwater increases away from the creek, since in many areas of the valley the creek is incised below the adjacent terrace areas.

Groundwater levels decline during the dry periods of the year and in response to pumping. Water levels are mounded in the vicinity of the percolation ponds that are operated by the CCSD. A generalized water table configuration for the winter of 1989 is provided on **Figure 2-5**, showing the down valley flow direction.

The average hydraulic gradient down the valley is about 0.006 ft/ft, with increased gradients in areas where the width of the bedrock valley narrows (Yates and Van Konynenburg, 1998). Water level elevations monitored at wells range from about 52 feet (NAVD 1988) to slightly above sea level at the western extent. Vertical head differences can be observed at two locations, near the shoreline at well 8R3, and at adjacent shallow and deep piezometers at 9N2 and 9N3.

The 8R3 well has one interval screened in bedrock at depth of 130 to 140 feet, and a shallower zone screened in the deep portion of the alluvial aquifer from 92 to 102 feet. Water levels in the two intervals at 8R3 were very similar and do not suggest the presence of a significant gradient between the fractured bedrock and the alluvial aquifer.

Water levels at the 9N2/9N3 location showed a significant downward gradient present, with the shallow well showing an elevation of 18.37 feet, while the deep well had a water level elevation of 8.29 feet (NAVD 1988). The water table elevation at the shallow well is considerably higher than other wells, suggesting that this is a perched interval that is affected by the nearby percolation pond or Van Gordon Creek and not representative of the principal aquifer system. This is consistent with the inter-bedded lithology logged in the adjacent well in the upper 20 feet, where well 9N3 is screened.

A fresh water lagoon is present at the western extent of the valley that appears to be in hydraulic communication with groundwater, since it has water present through most years and has a water level similar to the adjacent well 8R3.

2.3 Hydraulic Properties

Hydraulic characteristics of interest include the hydraulic conductivity, storage coefficient, specific yield and effective porosity. Limited characterization has been conducted in past studies, primarily quantifying hydraulic conductivity using pumping tests at seven wells located along the length of the valley. **Figure 2-6** shows the location of aquifer tests and the hydraulic conductivity that was reported in the 1998 USGS report (Yates and Van Konynenburg, 1998).

Responses of water levels in wells to stream stage changes were also used to estimate hydraulic properties, however, these estimates yield a composite of storage coefficient and transmissivity, so it is difficult to estimate hydraulic conductivity due to the highly variable storage coefficient, which could range from the specific yield to a confined or semi-confined range.

The results of the stream interaction estimates did indicate that the aquifer is highly permeable. The horizontal hydraulic conductivity estimated from pumping tests ranged from 99 to 413 ft/day. The geometric mean of the hydraulic conductivity is 220 ft/day. **Figure 2-7** shows the statistical distribution of hydraulic conductivity values.

The reported storage coefficients in the USGS Study were low compared to typical estimates for an unconfined sand and gravel aquifer. This is likely due to the short term nature of the aquifer tests, use of the pumping well response for analysis and the presence of finer grain interbeds, which would lead to a confined to semi-confined response rather than physical drainage of pore space in the aquifer. Based on the lithology of the aquifer, an estimate of 0.1 to 0.2 is estimated for the specific yield and the effective porosity of the aquifer at the site, based on typical values estimated for this type of aquifer.

Estimating the effective porosity from the specific yield is a conservative approach, since the effective porosity is likely to be higher than specific yield, which is the drainable portion of the pore space. Some moisture will be retained under gravity drainage that will contribute to groundwater flow. A lower effective porosity will result in a higher groundwater velocity, which is conservative for this analysis.

2.4 Boundary Conditions

Boundary conditions describe sources of water inflow and outflow to the basin, and include recharge, subsurface inflow from surrounding bedrock areas, pumping, stream inflows, outflows and seepage, evapotranspiration from groundwater, interaction with the ocean and percolation from wastewater treatment plant effluent disposal ponds. This section describes each of these elements, while the following section presents estimates of each of the water budget components.

2.4.1 Recharge

2.4.1.1 Recharge from Precipitation

Precipitation is estimated using the data from the San Luis Obispo–Poly Station, which was selected for use in the 1998 USGS report (Yates and Van Konynenburg, 1998). Mean annual precipitation for the period 1870–2013 was 21.93 inches. Rainfall increases with distance from the shoreline in this area, estimates increasing to 40 to 50 inches in headwater areas east of the basin of interest.

Figure 2-8 shows the long term precipitation trend near the site, indicating that precipitation has been significantly lower than the long term average for the last decade. The majority of the annual rainfall occurs between November and April. Deep percolation of precipitation past the root zone will recharge the aquifer and only occurs during significant precipitation events when soil moisture is above field capacity and available moisture exceeds evapotranspiration demands.

Most recharge from precipitation occurs in irrigated areas, since the native vegetation areas only meet these conditions during periods of average or greater precipitation. Evaluations during the USGS study period for the 1998 report, using data from 1988 and 1989, indicated no significant recharge occurred in the native vegetation areas (Yates and Van Konynenburg, 1998). This report estimated that the quantity of recharge under average conditions originating from precipitation within the basin at 50 acre-feet (AF)/year, which corresponds to 0.75 inches of recharge, or 3.4 percent of the precipitation.

2.4.1.2 Recharge from Irrigation Return Flows

Irrigated agriculture is practiced within a significant portion of the basin. The 1998 USGS report estimated that 37 percent of the applied water returned to the groundwater system as deep percolation, which is reasonable for the flood irrigation practices in the late 1980s. Since that period, irrigation practices have changed and more efficient sprinkler and drip systems are now used. A return flow percentage of 15 percent of the applied water for current irrigation practices is estimated, based on professional judgment.

2.4.1.3 Lateral Boundary Inflow

An additional source of water entering the system originates as discharge from surrounding fractured bedrock. This term is difficult to determine from field measurements, but was estimated in the 1998 USGS report at 150 AF/year (Yates and Van Konynenburg, 1998). This term was estimated from the contributing tributary areas of bedrock adjacent to the study area and modified downward based on the calibration conducted by the USGS.

2.4.1.4 Stream Channel Seepage

The most significant source of recharge to the aquifer system is seepage from the San Simeon Creek channel during runoff periods. Water levels in the basin recover rapidly with the onset of stream flow in the fall and winter and decline when stream flow ceases in the spring. Stream flows during the 2009 to 2013 time period are shown on **Figure 2-9.** The quantity of recharge from the stream is a function of the period of time that the stream is flowing and the amount of pumping that is occurring in the aquifer.

2.4.1.5 Waste Water Percolation Pond Recharge

Much of the water that is produced by the CCSD is returned after receiving secondary treatment to the lower part of the basin by discharging to a series of four percolation ponds. The quantity of water discharged to the percolation ponds during the period 2009–2013 is shown on **Figure 2-10**. This water infiltrates to the alluvial aquifer except for a small percentage that is lost to evaporation. The average discharge during the 2009 to 2013 period was 0.56 million gallons per day (MGD).

2.4.2 Discharge

2.4.2.1 Municipal Pumping

The CCSD maintains a potable water supply well field in the San Simeon basin that provides a significant portion of the water to the Cambria community. Additional water for the CCSD system is obtained from the Santa Rosa basin. In addition to the water supply pumping, a gradient control well is periodically pumped as needed to maintain an adequate westerly gradient from the CCSD well field toward the percolation ponds to avoid inducing flow of treated wastewater back toward the well field. **Figure 2-11** shows the average monthly pumping rates from the CCSD well field during 2009–2013. The average production rate from the San Simeon well field over this period was 0.51 MGD.

2.4.2.2 Agricultural Pumping

The alluvial aquifer is used for irrigation within the valley. The agricultural pumping during the late 1980s was estimated in the USGS report at 450 AF/year (Yates and Van Konynenburg, 1998). During an update to this analysis in 2007, this production was estimated at 180 AF/year, based on changes in irrigation practices and interviews with water users. (Yates, 2007)

2.4.2.3 Evapotranspiration from Groundwater

Limited evapotranspiration from groundwater occurs in areas where groundwater levels are near the surface in riparian areas near the channel of San Simeon Creek. This term was estimated at 30 AF/year in the USGS report (Yates and Van Konynenburg, 1998).

2.4.2.4 Discharge to Surface Water

Water in the aquifer will discharge to the surface water system during periods when the groundwater levels are higher than adjacent stream levels. This occurs primarily in the lower extent of the basin extending from the location of the percolation ponds to the ocean. **Figure 2-12** shows the locations where water was present in the San Simeon Creek channel during February 2014, indicating that groundwater discharge was occurring in these reaches. Elevations of the water surface (NAVD 1988) are shown on the figure.

These observations were made during a period when there had been no precipitation for multiple months. In addition, there is significant subsurface outflow to the ocean that occurs from the basin. This quantity was estimated by the USGS at 320 AF/year by calibration of their model (Yates and Van Konynenburg, 1998). Mean sea level in this area is 2.82 feet referenced to the NAVD 1988 datum used in this report. Mean seawater level was interpolated between the primary NOAA tidal stations at Port San Luis and Monterey (Yates, 2014 personal communication).

2.5 Water Budget

A basin water budget summarizes the components of inflow and outflow to the aquifer at the project site. The water budget from the 1998 WRIR report is summarized on **Table 2-1** and represents averages for the late 1980s period that was used in the USGS analysis.

Current practices have decreased agricultural pumping and return flows, and the CCSD now uses percolation ponds rather than the spray irrigation that was used in the late 1980s. The net inflows and outflows were balanced using estimates of the uncertain terms, primarily ocean outflow, resulting in an overall net inflow to the basin of 1760 AF/year with an equivalent outflow of the same quantity. The USGS estimates of areal recharge and lateral boundary inflow were retained for the current study, the remaining components were based on updates from the 2007 study (Yates, 2007), and flow records maintained by the CCSD. Components that cannot be measured with available field data, such as the ocean outflow and stream gains and losses were calculated in the model.

Table 2-1 Alluvial Aquifer Annual Water Budget Estimates from 1988 USGS Study

Budget Item	Inflow (AF)	Outflow (AF)	Net flow (AF)
Rainfall recharge	50		50
Stream Seepage	950	-410	540
Subsurface Inflow and Outflow			
Lateral Boundary Inflow	150		150
Ocean Boundary Outflow		-320	-320
Agricultural Water Use			
Pumping		-450	-450
Irrigation Return Flow	170		170
Nonagricultural Water Use			
CCSD Pumping		-550	-550
Rural Pumping		<-10	<-10
CCSD Percolation	440		440
Septic Tanks	<10		<10
Evapotranspiration		-30	-30
Change in Storage			0
Totals:	**1760**	**-1760**	**0**

Note: From Yates(1998)

0 380 760 1,520
Feet

Cambria Emergency Water Supply Project
TO1: Geo-Hydrological Model

Figure 2-1
Location of Wells and Borings with Lithologic Data

CDM Smith

hoffmanmj L:\51115_USACE-KansasCity\102849\Figure2-1_Location of Wells and Borings with Available Lithologic Data.mxd 4/3/2014

This page intentionally left blank.

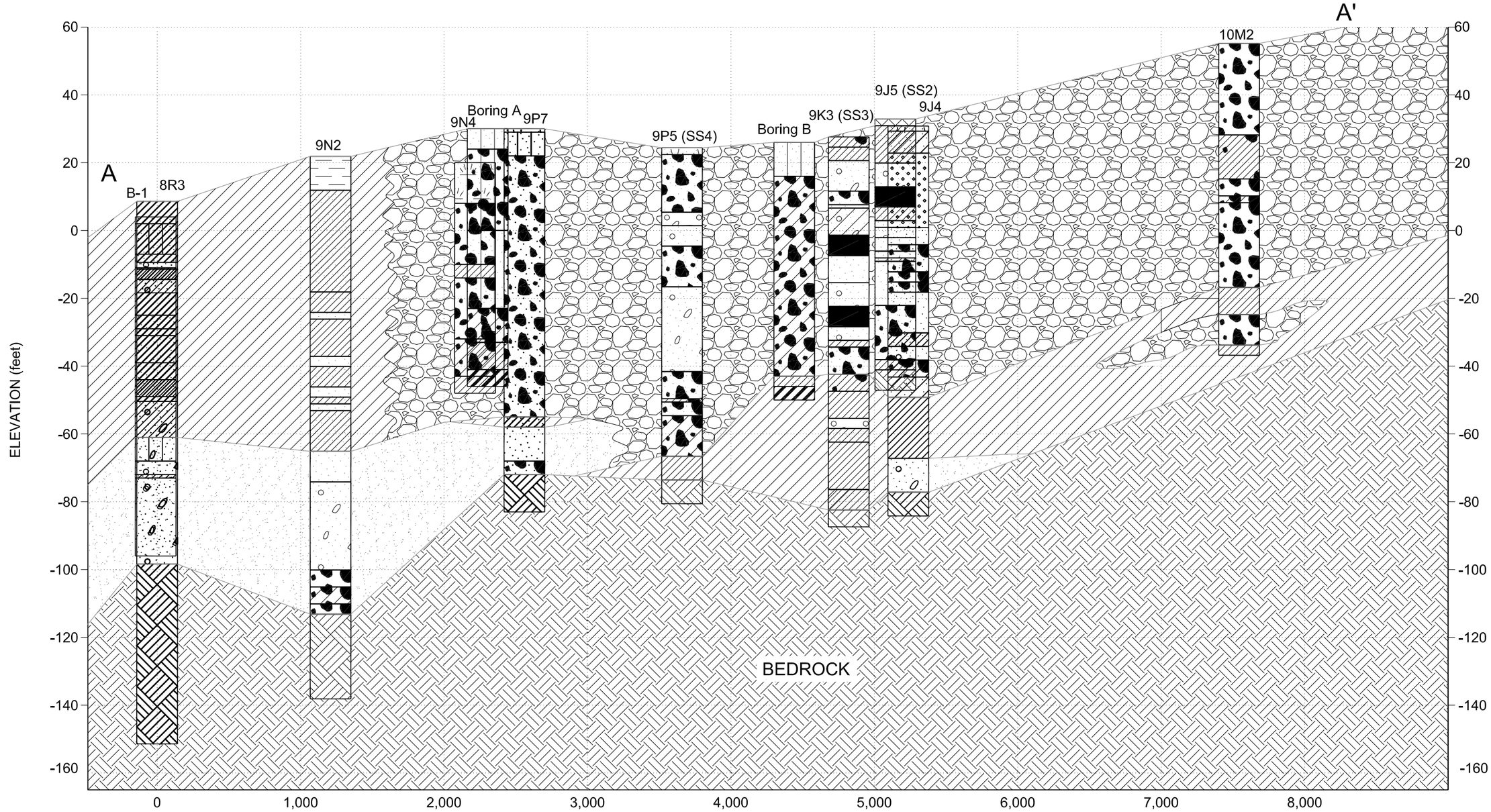

LEGEND

Poorly-graded Gravel	Clayey Gravel	Poorly-graded Sand	Bedrock	Clayey Sand	Water Level
Low Plasticity Gravelly Clay	Low Plasticity Clay	Poorly-graded Gravelly Sand	Topsoil		

Note: Geologic interpretation based on boring logs developed by the USGS and from Drillers logs.

NOT TO SCALE

CDM Smith

Cambria Emergency Water Supply Project
T01: Geo-Hydrological Model

Figure 2-2
Geologic Cross-Section of San Simeon Valley Alluvium

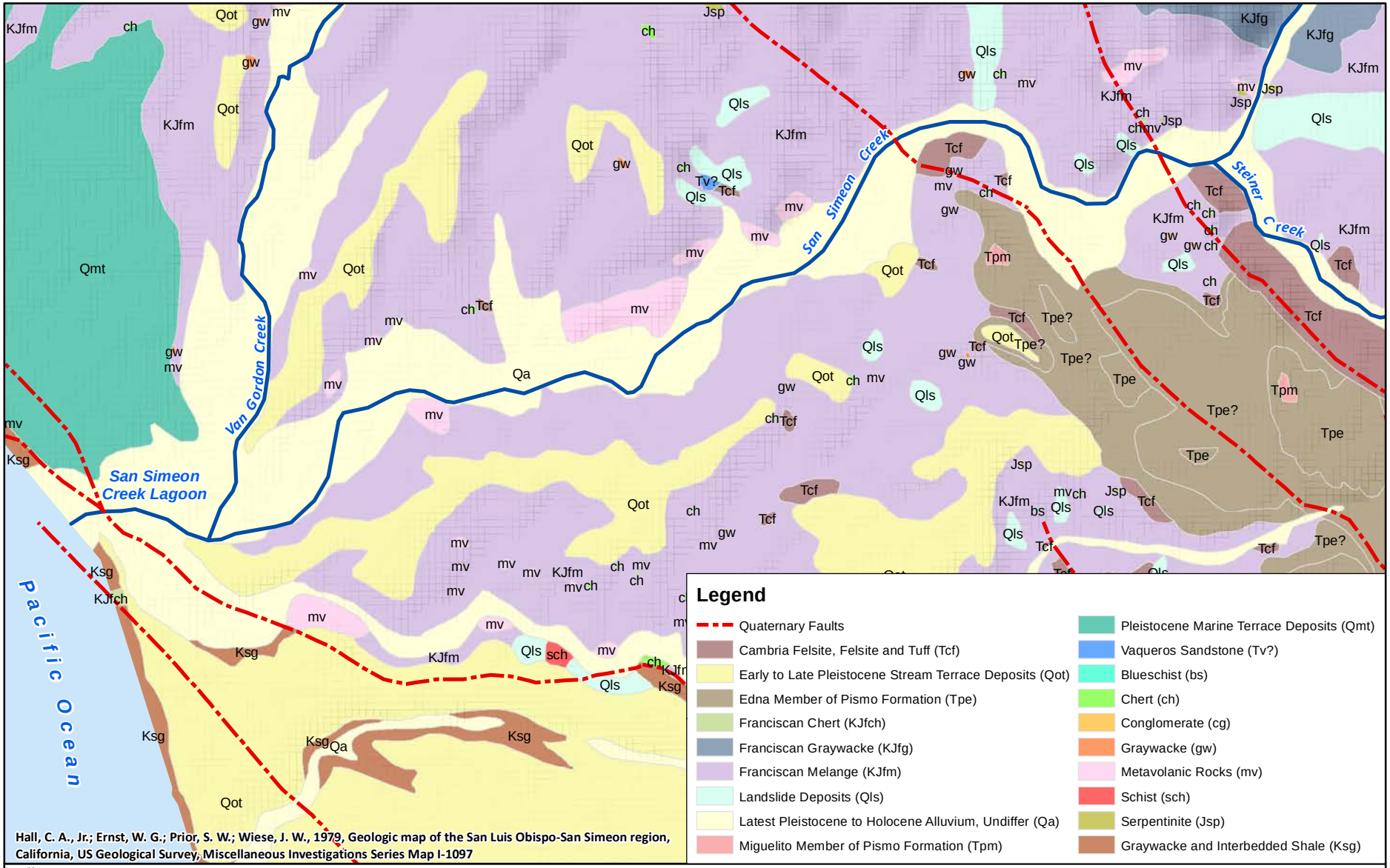

Hall, C. A., Jr.; Ernst, W. G.; Prior, S. W.; Wiese, J. W., 1979, Geologic map of the San Luis Obispo-San Simeon region, California, US Geological Survey, Miscellaneous Investigations Series Map I-1097

0 600 1,200 2,400
Feet

CDM Smith

Cambria Emergency Water Supply Project
TO1: Geo-Hydrological Model

Figure 2-3
Geologic Map of the San Simeon Creek Area

ramirezjj O:\51115_USACE-KansasCity\102849\Figure2-3_GeologicMapoftheSanSimeonCreek Area.mxd 4/28/2014

This page intentionally left blank.

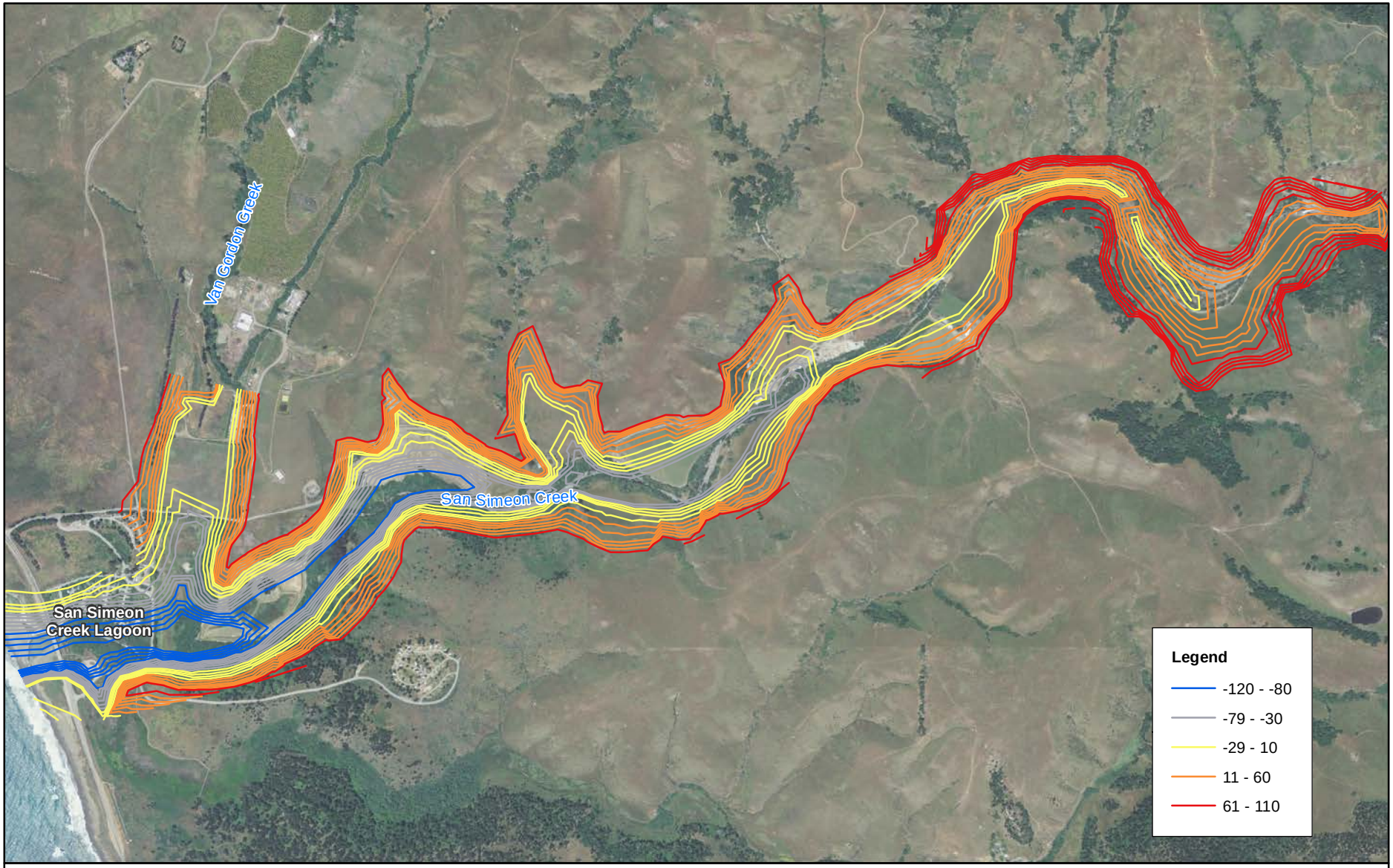

0 500 1,000 2,000
Feet

CDM Smith

Cambria Emergency Water Supply Project
TO1: Geo-Hydrological Model

Figure 2-4
Interpreted Bedrock Surface Elevation
below the San Simeon Basin Alluvial Aquifer

ramirezjj C:\Users\ramirezjj\Desktop\Figure 2-4_Interpreted Bedrock Surface Elevation.mxd 3/21/2014

This page intentionally left blank.

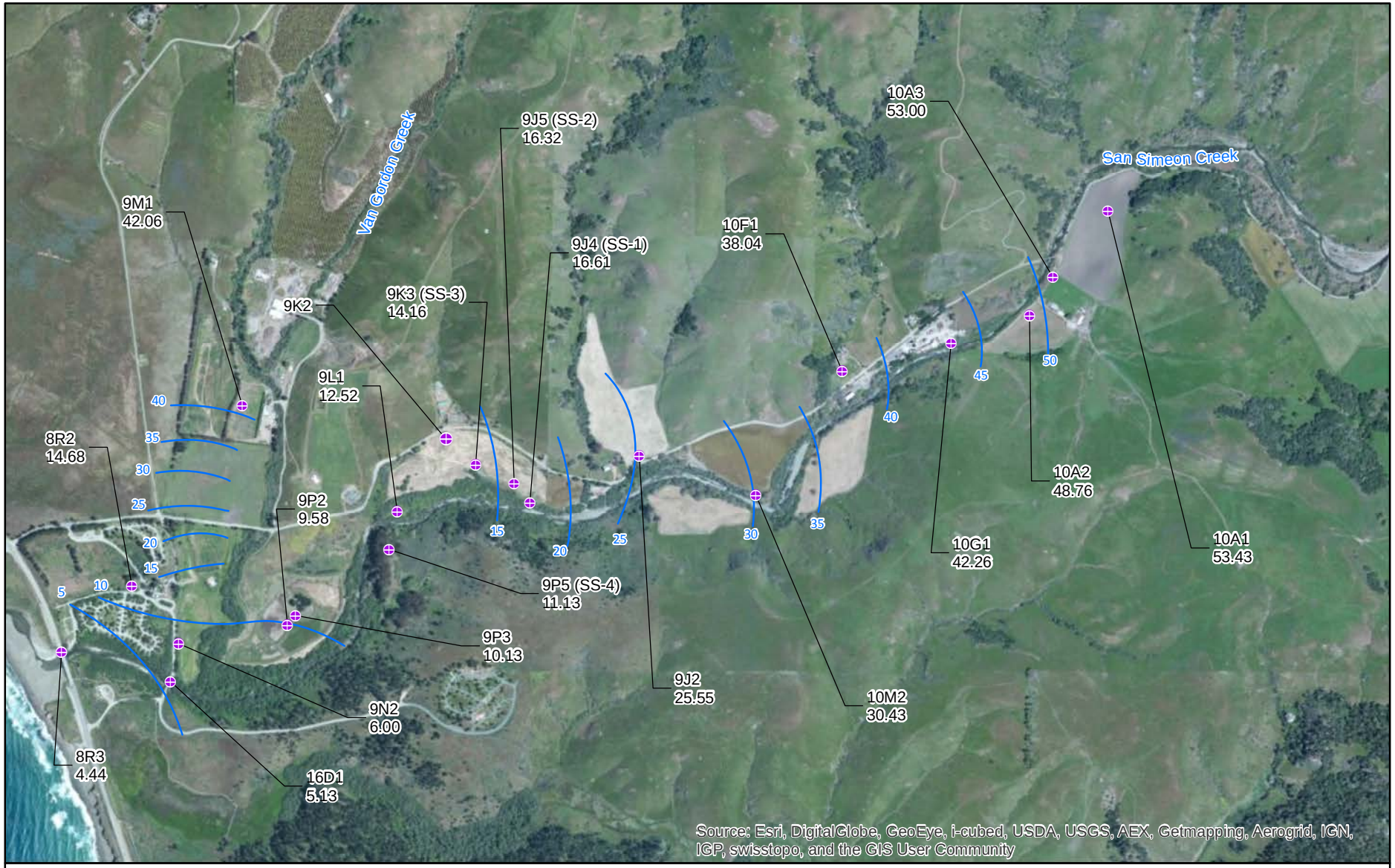

N

0 500 1,000 2,000

Feet

CDM Smith

Elevations are in NAVD88 datum.

Cambria Emergency Water Supply Project
TO1: Geo-Hydrological Model

Figure 2-5

Generalized Water Table – Winter 1989

ramirezjj O:\51115_USACE-KansasCity\102849\Figure2-5_Generalize Water Table – Winter 1989.mxd 4/28/2014

This page intentionally left blank.

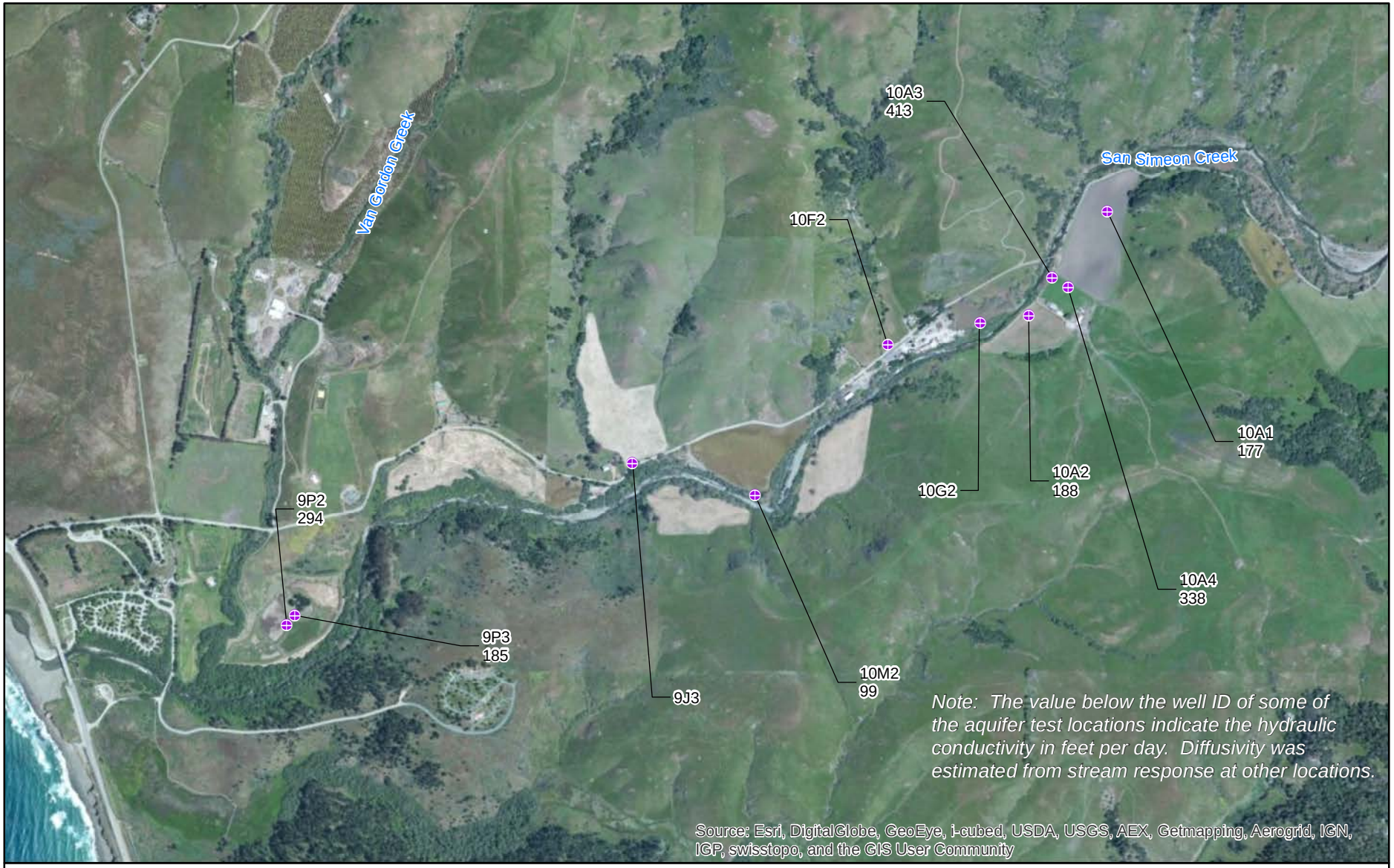

0 500 1,000 2,000
Feet

Cambria Emergency Water Supply Project
TO1: Geo-Hydrological Model

Figure 2-6
Location of Aquifer Tests

CDM Smith

hoffmanmj L:\51115_USACE-KansasCity\102849\Updated 4.3.14\Figure2-6_Location of Aquifer Tests.mxd 4/3/2014

This page intentionally left blank.

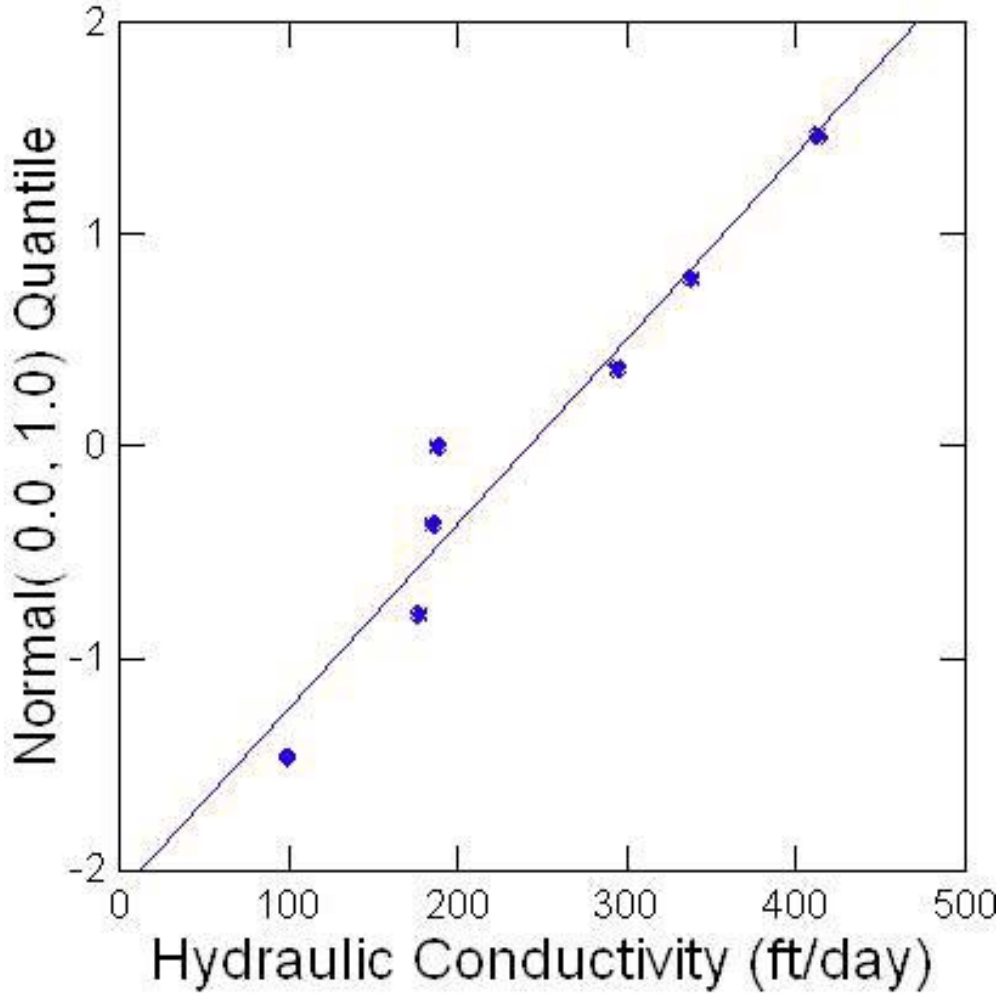

Note: Blue dots represent conductivity value from the 1998 USGS Report.

Cambria Emergency Water Supply Project
TO1: Geo-Hydrological Model

CDM Smith

Figure 2-7
Hydraulic Conductivity Statistical Distribution

ramirezjj C:\Users\ramirezjj\Documents\51115 USACE\102849 Cambria\Figure 1-1_Location of Study Area with Significant Site Features.mxd 3/28/2014

This page intentionally left blank.

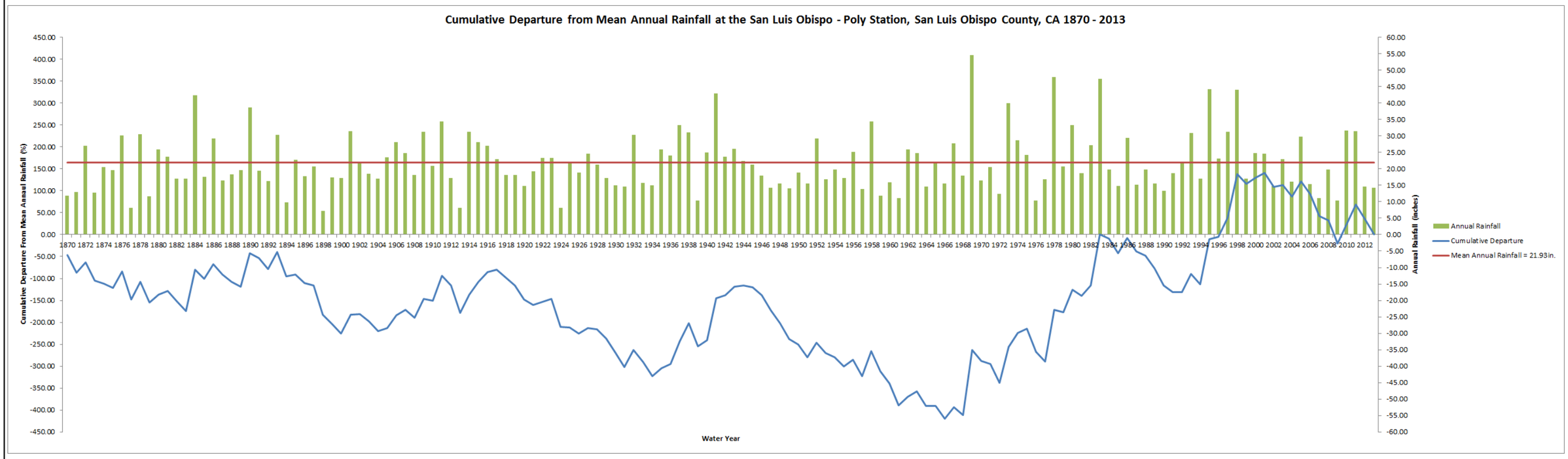

Cambria Emergency Water Supply Project
TO1: Geo-Hydrological Model

Figure 2-8
Precipitation and Cumulative Departure
from the Long Term Average at San Luis Obispo - Poly Station

CDM Smith

ramirezjj O:\51115_USACE-KansasCity\102849\Figure2-2_Geologic Cross-Section of San Simeon Valley Alluvium.mxd 4/28/2014

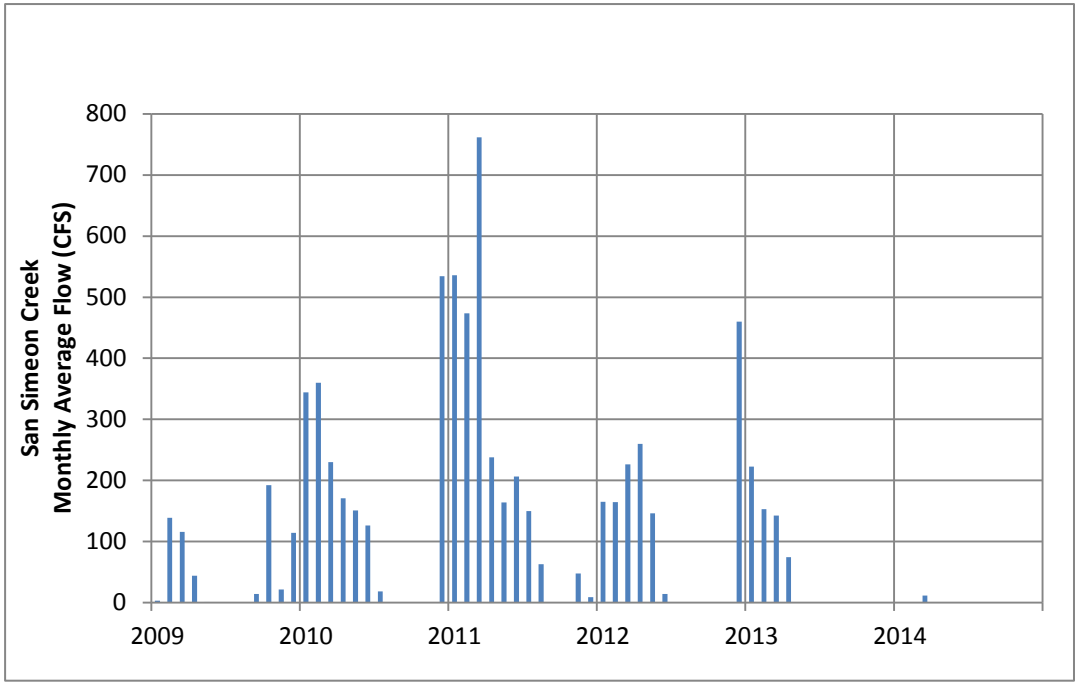

Cambria Emergency Water Supply Project

TO1: Geo-Hydrological Model

Figure 2-9

Streamflow in San Simeon Creek and Groundwater Level Hydrographs in the 2009 - 2013 Period

CDM Smith

ramirezjj C:\Users\ramirezjj\Documents\51115 USACE\102849 Cambria\Figure 2-6_Location of Aquifer Tests.mxd 3/28/2014

This page intentionally left blank.

Percolation Pond Discharge
2009 to 2013

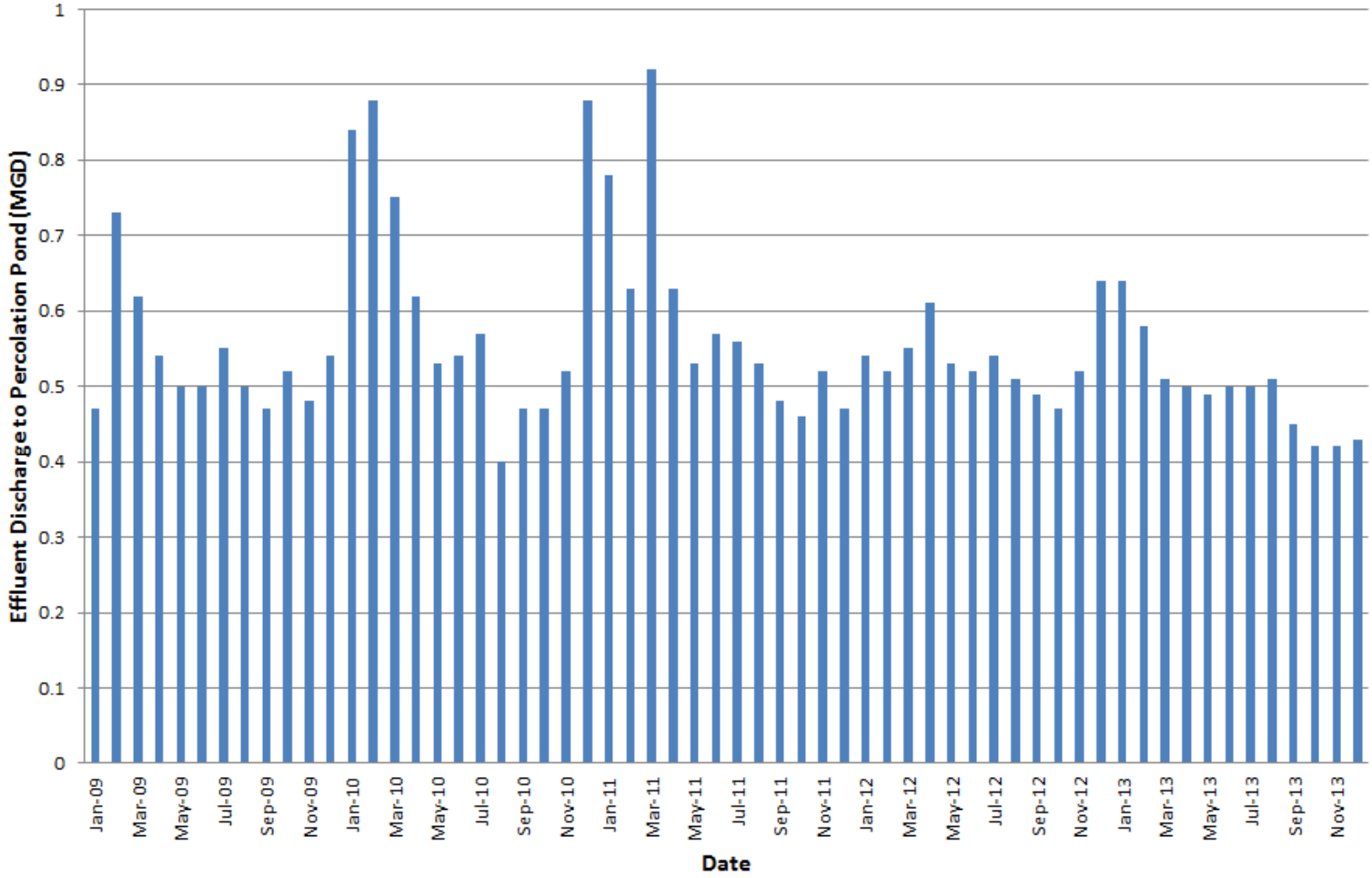

Cambria Emergency Water Supply Project
TO1: Geo-Hydrological Model

CDM Smith

Figure 2-10
Pecolation Pond Secondary Effluent Discharge 2009 to 2013

ramirezjj C:\Users\ramirezjj\Documents\51115 USACE\102849 Cambria\Figure 2-6_Location of Aquifer Tests.mxd 3/28/2014

This page intentionally left blank.

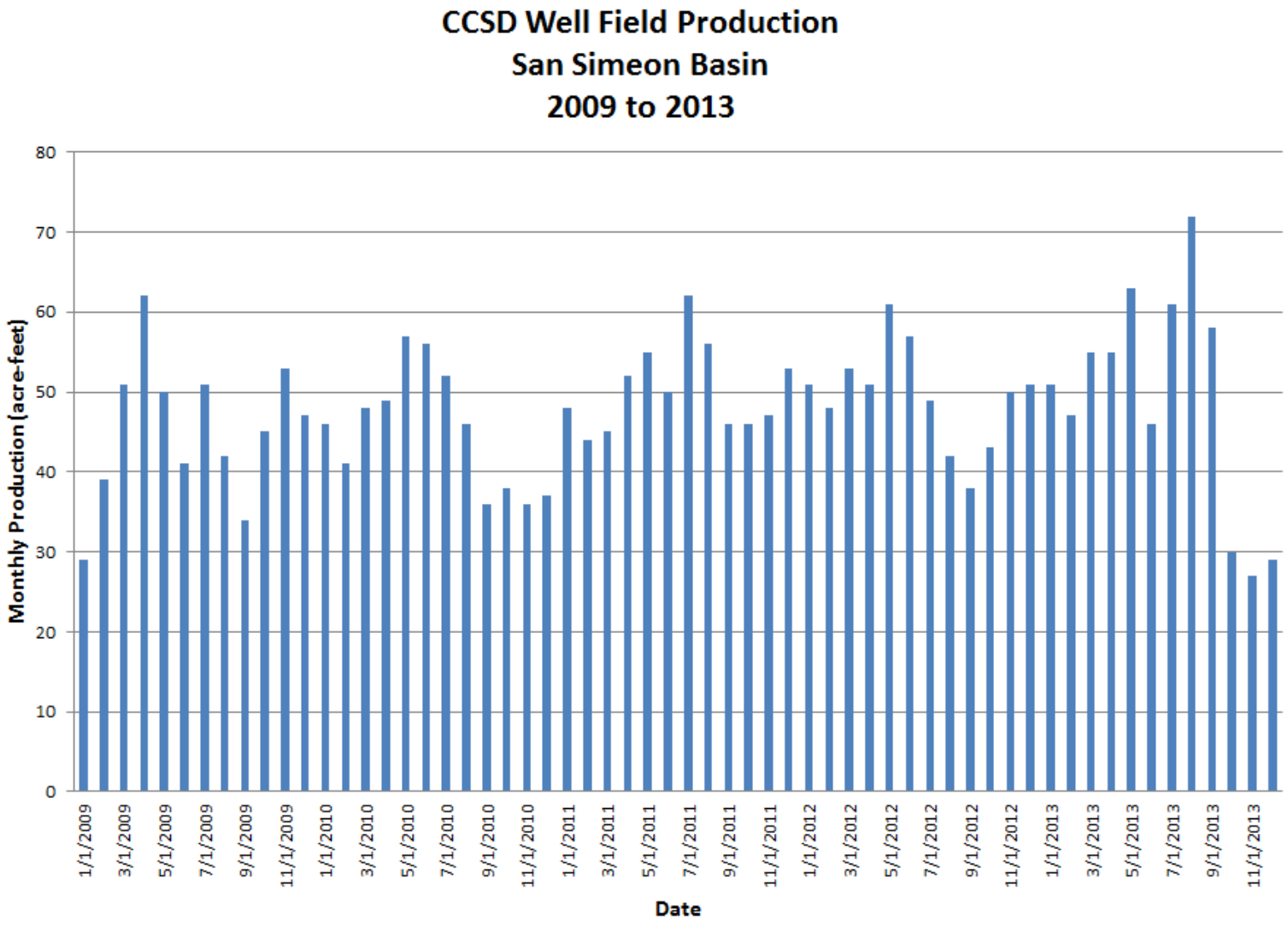

Cambria Emergency Water Supply Project
TO1: Geo-Hydrological Model

CDM Smith

Figure 2-11
CCSD San Simeon Basin Well Field Production 2009 to 2013

ramirezjj C:\Users\ramirezjj\Documents\51115 USACE\102849 Cambria\Figure 2-6_Location of Aquifer Tests.mxd 3/28/2014

This page intentionally left blank.

0 150 300 600
Feet

Cambria Emergency Water Supply Project
TO1: Geo-Hydrological Model

Figure 2-12
Location of Surface Water - February 2012

CDM Smith

ramirezjj C:\Users\ramirezjj\Documents\51115 USACE\102849 Cambria\Figure 2-12_Location of Surface Water.mxd 3/28/2014

This page intentionally left blank.

Section 3
Computer Model Code Selection

This modeling evaluation has been conducted using industry standard, open source, government developed computer programs that are able to mathematically represent the processes of interest. Detailed descriptions of these modeling programs are provided in the cited references and will not be repeated. The specific elements that are used in this application are described in the model development section. In addition, preparation of model data sets and post processing of model output was facilitated through use of a commercial graphical user interface. The selected programs are listed below.

MODFLOW-2000 (Harbaugh, 2000), this finite difference model is the most widely used program for modeling of groundwater flow and serves as the basis for flow calculations in the additional programs that are used in the analysis. This program was developed by the US Geological Survey and includes capabilities for simulation of all of the components of interest in this investigation, except for density driven flow, which is handled in the companion program SEAWAT. MODFLOW-2000 is well documented by the USGS.

MT3DMS. (Zheng, 1999), this code was developed under contract from the US Environmental Protection Agency and the US Army Corps of Engineers. This model is an industry standard model used for simulation of transport of dissolved constituents in groundwater. This code is incorporated into the SEAWAT model.

SEAWAT. (Langevin, 2003), SEAWAT is a modification of MODFLOW-2000 and MT2DMS that allow simulation of groundwater flow, including the effects of variable density and transport of solutes. This industry standard model was developed by the USGS. This model was used to assess the importance of density driven flow for comparison with the primary simulations in MODFLOW and MT3DMS.

This page intentionally left blank.

Section 4
Ground-Water Flow Model Construction

The basin conceptual model described in Section 2 was used to configure a numerical flow model in MODFLOW-2000 and to set up transport capabilities in MT3DMS and SEAWAT. This section describes the configuration of the model framework, selection of simulation packages to represent the site processes and parameter selection.

4.1 Model Grid

A very fine computational grid was defined to represent the aquifer system at the site, since a major concern is the simulation of transport and consideration of vertical movement of recharge or injected water. The alluvial aquifer is represented by 18 vertical layers at the western limit of the site, decreasing to 8 active layers in the eastern portion of the site where the aquifer is thinner and more distant from the area of interest. The horizontal spacing for grid cells was maintained at a uniform size of 40 by 40 feet, resulting in a grid with 120 rows and 460 columns.

The grid was rotated to approximately parallel the trend of the San Simeon basin. Cells outside of the aquifer footprint and in deeper portions of the grid in the eastern part of the model were inactivated. **Figure 4-1** shows the extent of the model, while **Figure 4-2** shows the model grid in the area of primary concern between the CCSD well field and the wastewater percolation ponds.

4.2 Hydraulic Parameters

A groundwater model must define hydraulic characteristics for each active cell in the grid in order to evaluate flow and transport. These hydraulic characteristics include horizontal and vertical hydraulic conductivity and storage characteristics of the aquifer material. A detailed calibration of hydraulic characteristics was done for a model of the basin in 2007 (Yates, 2007) that was used as the basis for initial configuration of hydraulic characteristics for the alluvial aquifer.

This model was configured in a similar manner to leverage the calibration that was done at that time. Minor refinements were incorporated in some areas, however, variation in hydraulic conductivity during the evaluation of calibration did not result in significant improvements, so the hydraulic conductivity distribution remained very similar to the 2007 configuration. A detailed calibration for development of specific yield, which is important in assessing the volume of water in storage, for assessment of groundwater velocities and estimation of residence time of injected fluids was done.

The hydraulic properties were grouped vertically for definition of hydraulic properties, with an upper zone incorporating layers 1–8, and intermediate zone represented by layers 9–12, and a deep zone for layers 13–18. Properties within each of the layer groupings were uniform. The base of the upper zone was set at an elevation-20, or the bedrock elevation for cases where bedrock was above this elevation. The intermediate zone extended from elevation -20 to elevation -60, again truncating at the bedrock contact if it was shallower. The deep zone extended from -60 to the bedrock contact. In cases where the bedrock contact was above the noted elevations, then underlying layers were inactivated in the model. The active extent of the model grid therefore extended from the water table to the bedrock contact.

Figure 4-3, thru **Figure 4-5** show the distribution of horizontal hydraulic conductivity for the upper, middle and deep zones respectively. The distribution of hydraulic conductivity incorporates the conceptual model characteristic of a lower permeability zone in shallow materials in the western extent of the model down-gradient of the confluence of Van Gordon Creek. A constant ratio of horizontal to vertical hydraulic conductivity of 10:1 was used throughout the model domain. The initial specific yield was set to 0.12, with changes that were incorporated during calibration described in subsequent sections.

4.3 Boundary Conditions

Boundary conditions describe characteristics that control inflow and outflows of water to and from the aquifer system. As described in the conceptual model, the primary sources of water entering the system are recharge from stream seepage, infiltration of precipitation and irrigation return flows, waste water percolation and lateral boundary inflow.

The primary discharge from the aquifer includes stream seepage in the western portion of San Simeon Creek, municipal and agricultural pumping and subsurface discharge to the ocean. These boundary conditions are configured in standard packages within MODFLOW-2000, as described below.

Boundary conditions are specified for individual stress periods, which are a duration over which a given stress is assumed to be constant. For this model, the stress periods for both calibration and assessment of alternatives was specified as a calendar month. These stress periods are subdivided during computations into smaller time increments to facilitate the calculations.

4.3.1 Recharge Package

The recharge package in MODFLOW-2000 allows specification of a time variant rate of flow, expressed as a depth of water per unit of time that is applied to the model at the highest active layer. This model package was used to represent the following sources of recharge:

- Recharge from native precipitation,
- Recharge from irrigation return flows,
- Recharge from lateral boundary inflows, and
- Waste water percolation.

Waste water percolation was the only parameter in the recharge package that incorporated time variation, annual averages for the other parameters were used, since transport time through the unsaturated zone will tend to even out the small surface recharge sources. The recharge from native precipitation and irrigation return flows was evenly allocated through the basin, with an estimated 50 AF of recharge from precipitation, and the irrigation return flows estimated at 15 percent of the applied water. This recharge quantity was set to a constant value of 2.05 inches/year. The lateral boundary inflow component, representing subsurface inflows from surrounding bedrock areas was estimated at 150 AF/year (Yates and Van Konynenburg, 1998), and this quantity was distributed to the outermost cells in the model. During drought simulations, described in later sections, these recharge quantities were reduced.

The CCSD maintains records of discharge to the waste water percolation ponds, see **Figure 4-6**, that were used to determine the recharge quantity infiltrating to the aquifer. These recorded quantities were applied to the entire footprint of the ponds. Some consumptive use of this water would occur due to evaporation, however, it is a relatively small percentage of the applied water, so this was not included. Previously presented Figure 2-10 shows the quantity of wastewater that was discharged to the ponds during the 2009 to 2013 period. This quantity of flow was converted to a depth for use in the model, allocating the flow over the entire area of the pond. Actual operations tend to use only a single pond, moving the discharge to different ponds to maintain infiltration capacity.

4.3.2 Stream Flow Routing Package

The stream flow routing package in MODFLOW-2000 is used to simulate the surface water component in the model. This package maintains a mass balance between the stream flow and gains and losses to groundwater. When the groundwater level is below the stream stage, as occurs during the beginning of the runoff season, water will infiltrate from the stream into groundwater. Conversely, during times when the groundwater level is above the stream stage, groundwater will discharge to the stream. This occurs in the lower reaches of San Simeon Creek as a result of operations at the percolation pond.

Water level observations show that groundwater is rapidly replenished when runoff begins in San Simeon Creek. **Figure 4-7** shows the groundwater elevations at wells 9K2 and 9L1 compared with flows in San Simeon Creek demonstrating this rapid recharge. The stream flow routing package is configured to provide little resistance to flow between groundwater and surface water. **Figure 4-8** shows the location of the stream boundary conditions. Channel and water surface elevations were surveyed to obtain accurate information for the model. Flow rates for San Simeon Creek were obtained from a stream gage maintained by San Luis Obispo County located near the CCSD well field. This flow was assumed to be representative of inflow at the upper reach of the model, since during times when the stream is flowing the discharge rates are significantly higher than potential seepage rates. The stream conductance term was set to a high value based on the observed rapid response of water levels to stream flow. No calibration was done for this parameter.

4.3.3 Lake (Fresh Water Lagoon) Package

The fresh water lagoon is highly connected with the groundwater and surface water systems at the site. Flow in San Simeon Creek discharges to the upper extent of the lagoon. When groundwater is higher than the lagoon stage, discharge will occur from the aquifer to the lagoon. Since the berm impounding the lagoon is periodically breached during higher flow periods or storms, low permeability sediment is potentially eroded from the base of the lagoon, resulting in probable high connectivity between the lagoon and groundwater in some areas.

The lake package was configured to reflect a high degree of connection between the lake and groundwater. Figure 4-8 shows the location of the fresh water lagoon and associated streams. An outlet stream was used to simulate conditions when the lagoon discharges to the ocean. The water surface and lagoon bottom was surveyed to obtain accurate location and elevation information. No data were available to allow calibration of leakage parameters for the lagoon. During transport and variable density simulations the stream package was used to represent this feature to maintain compatibility with the model codes.

4.3.4 Constant Head Package

The hydraulic connection with the ocean is simulated using constant head boundary conditions in the off-shore area. The boundary associated with the ocean was simulated using the equivalent fresh

water head to account for the density difference with sea water. For the SEAWAT simulations, the density is internally accounted for in the program. **Figure 4-9** shows the location of the constant head boundaries. The constant head in layer 1 was set over the off-shore portion of the model, while deeper zones were represented as line sources at the western extent of the model. Since sea water is denser than fresh water, the pressure in deeper zones is greater than would be present if the overlying water were fresh. For example, the equivalent fresh water head in the aquifer at a depth of 100 feet in the sea water saturated portion of the aquifer would be 2.57 feet higher.

4.3.5 Well Package

Pumping of groundwater for irrigation and municipal use is simulated using the MODFLOW-2000 well package. This package removes a specified quantity of water that is distributed across model layers corresponding to well screen intervals. The flow was specified proportional to the hydraulic conductivity and thickness of individual layers that correspond to the reported screen intervals.

Estimates of agricultural pumping were developed in the 2007 study based on land use and water user interviews (Yates, 2007). Production records from CCSD were used for the municipal pumping rates. **Figure 4-10** shows the location of pumping wells that were included in the model. Total agricultural pumping occurs during the growing season from June through October, with an average of 180 AF per year of groundwater produced. The CCSD production from the San Simeon basin is limited to 454 gpm (0.635 MGD) during the dry season. The recent pumping was previously presented on Figure 2-11. Well 9P7, located in the percolation pond area, is periodically pumped to maintain a seaward gradient from the well field. However, detailed records of pumping from this well are not available.

4.4 Transport Packages

Analysis of transport of dissolved constituents was conducted using MT3DMS, which uses information from MODFLOW to define flow terms and physical characteristics. The primary additional parameters necessary for transport analysis include effective porosity, which is important in determine groundwater velocity, and dispersivity. Dispersivity is a parameter used to describe the spread of a solute in three dimensions due to small scale variations in groundwater velocity and localized flow directions.

Literature data were used to estimate the dispersivity parameter as a function of transport distance for sensitivity analysis. The selected value for longitudinal dispersivity was 67 feet, 6.7 feet for transverse dispersivity and .67 feet for vertical dispersivity. Effective porosity, which is a measure of the open pore space through which water actively flows, was estimated based on specific yield, which provides a lower limit estimate of the effective porosity.

Simulation of the selected emergency water supply alternative using the variable density package in SEAWAT was also conducted to assess the importance of variable density flow to confirm results of fresh water equivalent head simulations.

4.5 Selection of Calibration Targets

Model calibration is the process of adjustment of model parameters to match model results with field observations. The available information at the site was assessed to identify field measurements that can be used to assess model calibration. The model is configured with known information, as identified in the site conceptual model and in the descriptions provided above.

Parameters in the model that have the greatest uncertainty are selected for adjustment in the process of calibration. The principal data available for comparisons between field measurements and model calculated results are water levels at wells. The CCSD has a comprehensive water level monitoring program in place that records water levels twice per month at available wells. Climatic information was examined to select a period that encompassed a range in rainfall quantity during a period where information on pumping and wastewater discharge was available, along with water level measurements.

The 2001–2002 period was selected for this analysis. **Figure 4-11** shows the location of wells with water level measurement. The water level records were screened to remove wells that had been recently pumped to obtain a data set representative of aquifer conditions for use in the calibration process. This resulted in a total of 411 water level measurements at 13 wells distributed in the San Simeon basin.

This page intentionally left blank.

Cambria Emergency Water Supply Project
TO1: Geo-Hydrological Model

CDM Smith

Figure 4-1
Model Grid

ramirezjj C:\Users\ramirezjj\Documents\51115 USACE\102849 Cambria\Figure 1-1_Location of Study Area with Significant Site Features.mxd 3/28/2014

This page intentionally left blank.

Cambria Emergency Water Supply Project
TO1: Geo-Hydrological Model

Figure 4-2
Detail Area Showing Model Grid

CDM Smith

ramirezjj C:\Users\ramirezjj\Documents\51115 USACE\102849 Cambria\Figure 1-1_Location of Study Area with Significant Site Features.mxd 3/28/2014

This page intentionally left blank.

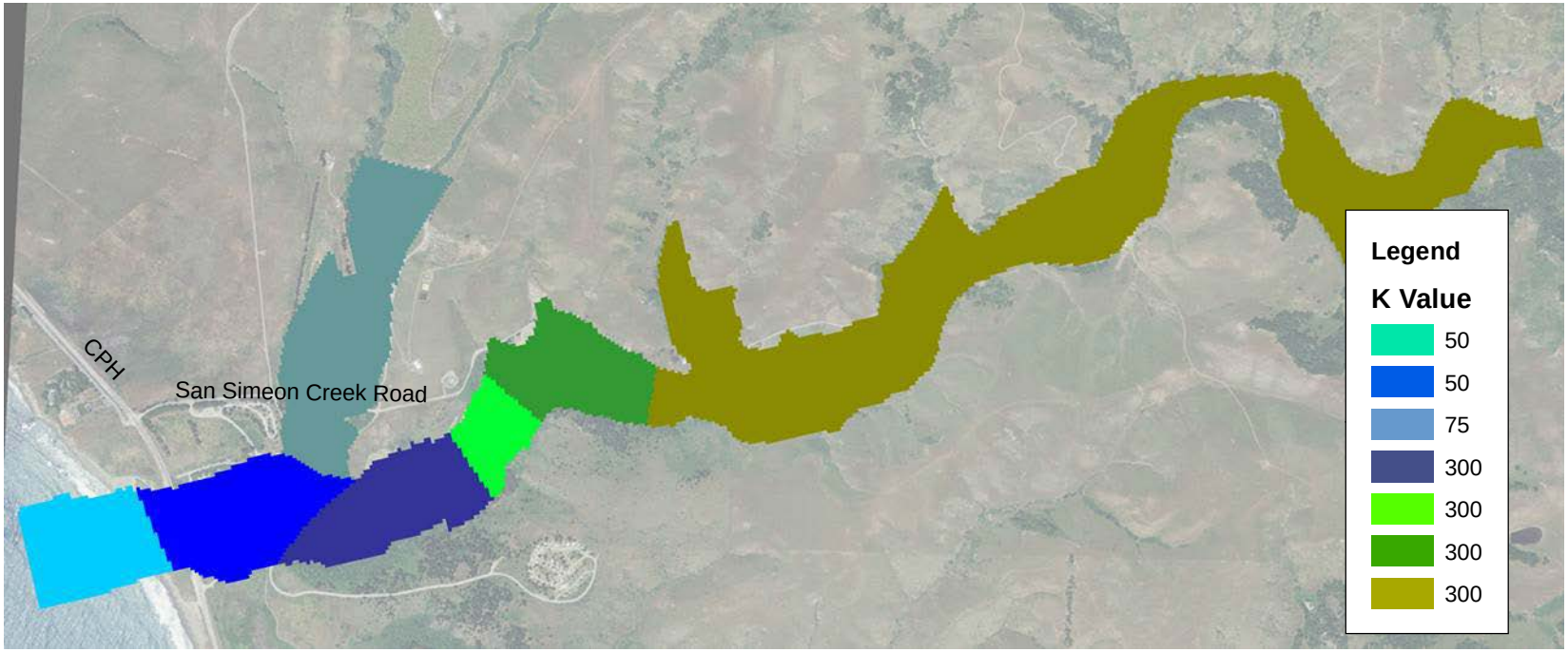

Cambria Emergency Water Supply Project

TO1: Geo-Hydrological Model

Figure 4-3

Upper Zone Hydraulic Conductivity Distribution

CDM Smith

ramirezjj C:\Users\ramirezjj\Documents\51115 USACE\102849 Cambria\Figure 2-6_Location of Aquifer Tests.mxd 3/28/2014

This page intentionally left blank.

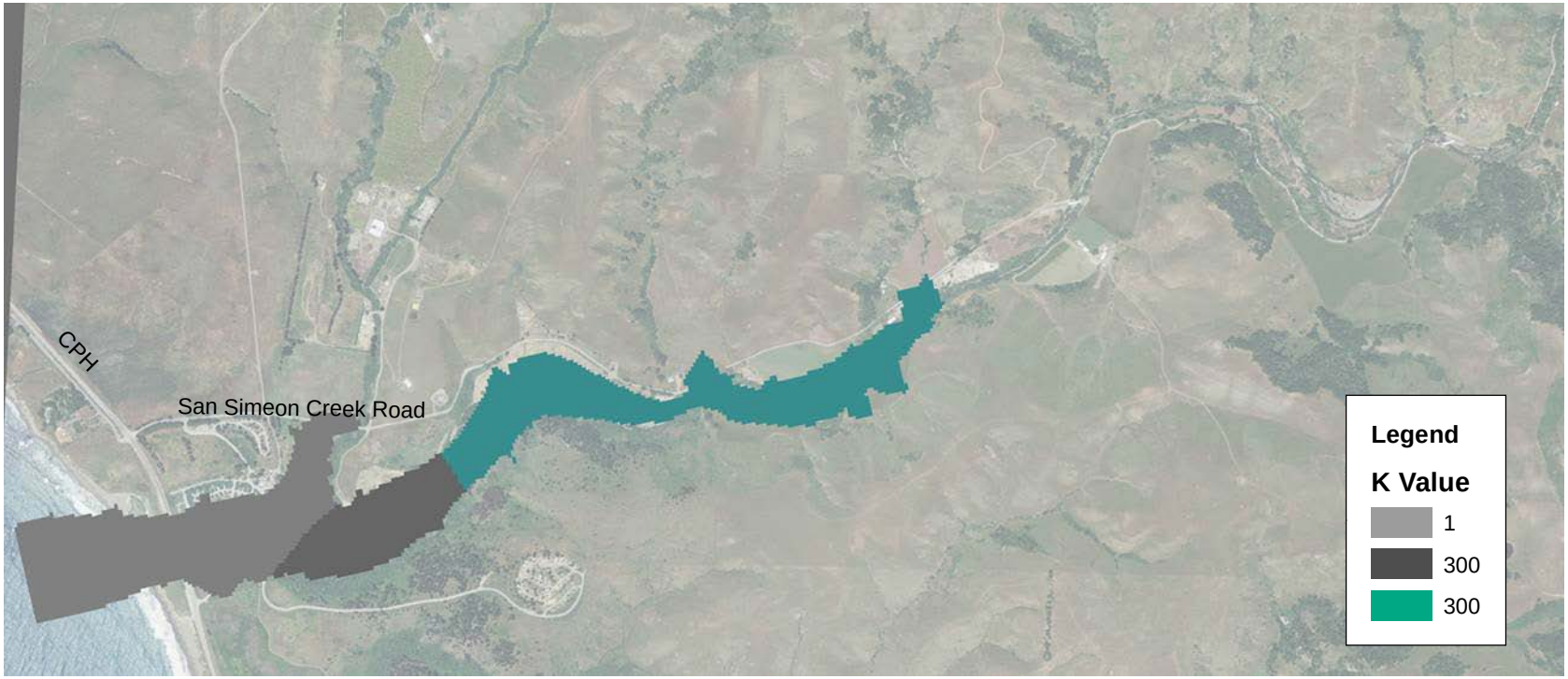

Cambria Emergency Water Supply Project
TO1: Geo-Hydrological Model

CDM Smith

Figure 4-4
Middle Zone Hydraulic Conductivity Distribution

ramirezjj C:\Users\ramirezjj\Documents\51115 USACE\102849 Cambria\Figure 2-6_Location of Aquifer Tests.mxd 3/28/2014

This page intentionally left blank.

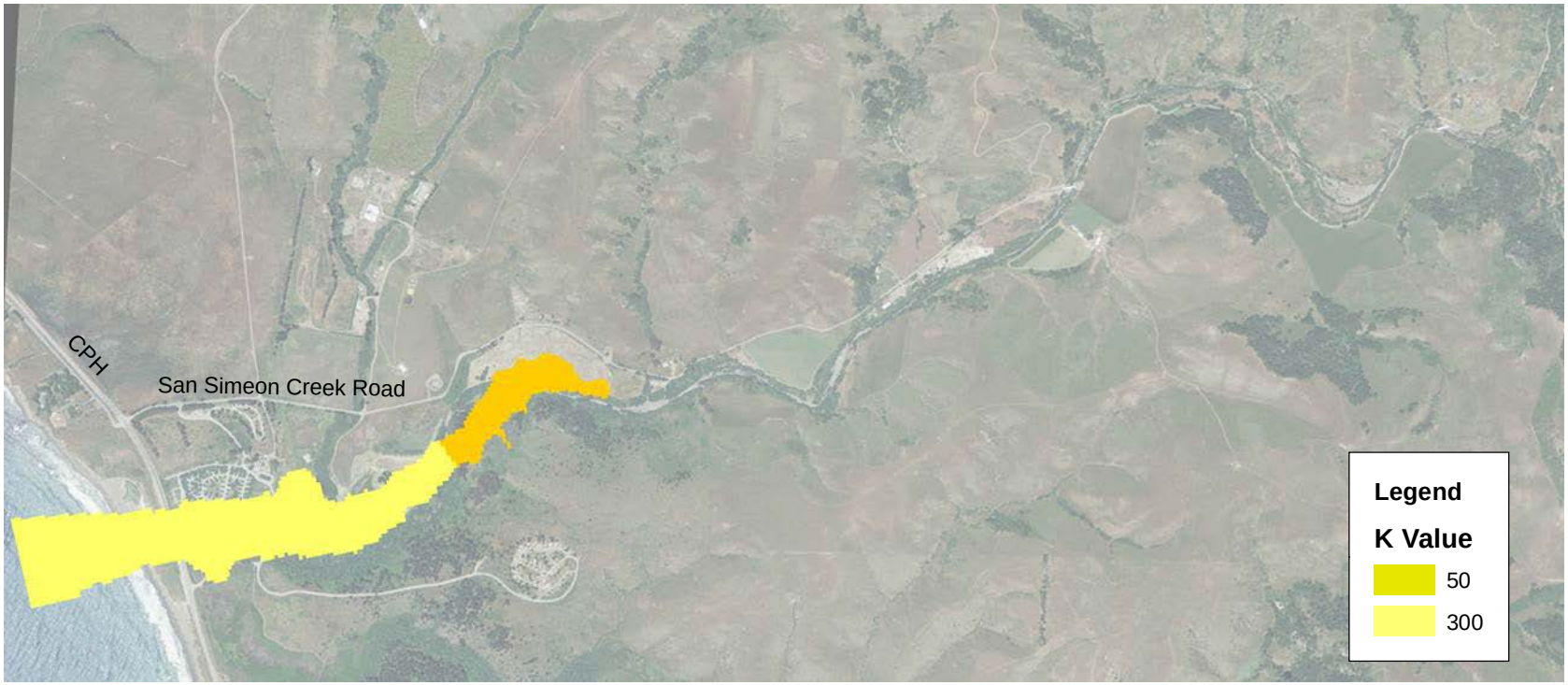

Cambria Emergency Water Supply Project
TO1: Geo-Hydrological Model

CDM Smith

Figure 4-5
Deep Zone Hydraulic Conductivity Distribution

ramirezjj C:\Users\ramirezjj\Documents\51115 USACE\102849 Cambria\Figure 2-6_Location of Aquifer Tests.mxd 3/28/2014

This page intentionally left blank.

0 250 500 1,000
Feet

Cambria Emergency Water Supply Project
TO1: Geo-Hydrological Model

Figure 4-6
Location of Wastewater Percolation Ponds

CDM Smith

schellerka K:\51115_USACE-KansasCity\102849\Figure4-6_WastewaterPerchlorationPonds.mxd 4/3/2014

This page intentionally left blank.

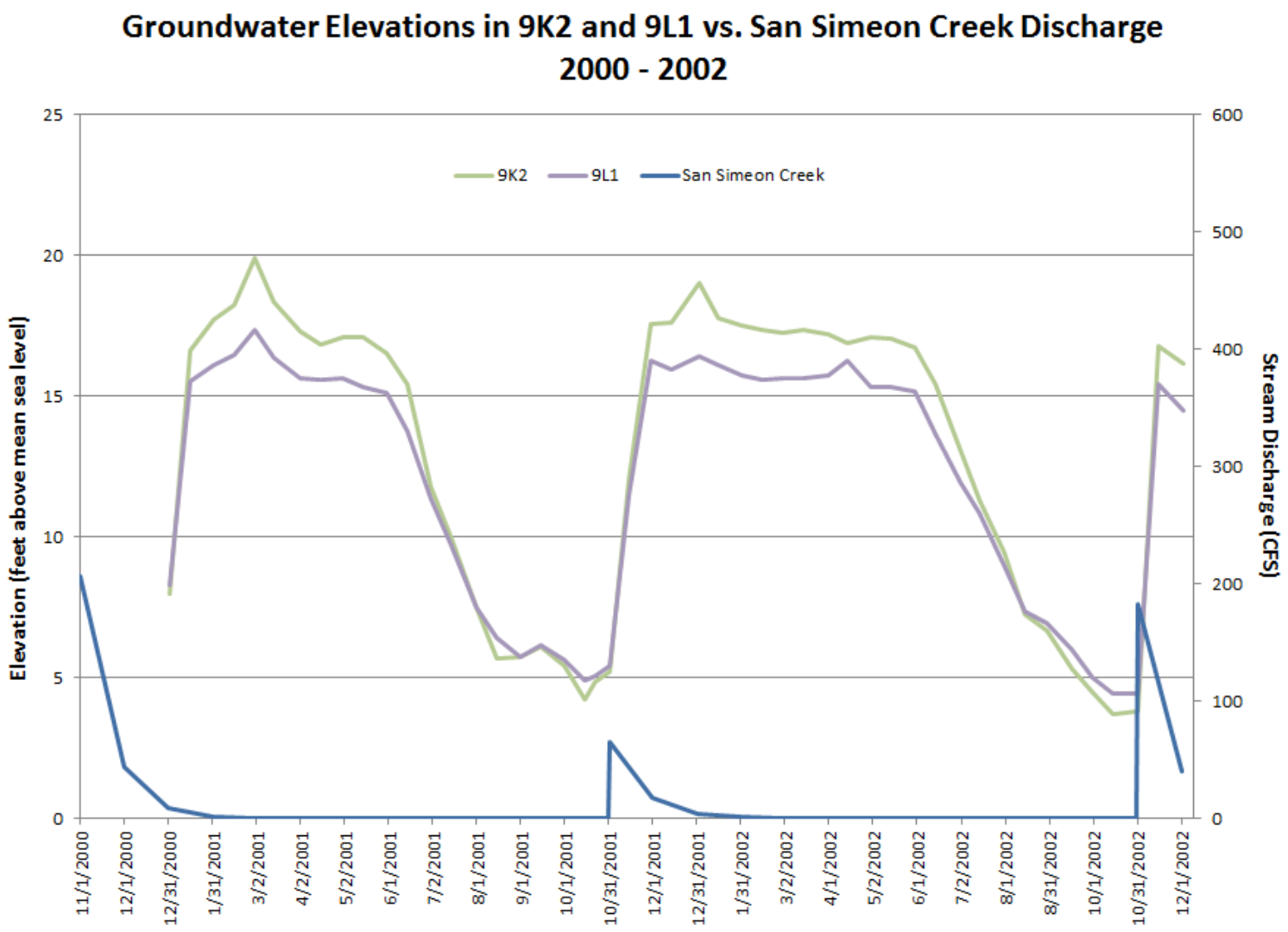

Cambria Emergency Water Supply Project
TO1: Geo-Hydrological Model

CDM Smith

Figure 4-7
San Simeon Creek, 9K2 and 9L1 Hydrographs

ramirezjj C:\Users\ramirezjj\Documents\51115 USACE\102849 Cambria\Figure 2-6_Location of Aquifer Tests.mxd 3/28/2014

This page intentionally left blank.

Stream Boundary

Lagoon Boundary

Cambria Emergency Water Supply Project
TO1: Geo-Hydrological Model

CDM Smith

Figure 4-8

Location of Stream and Lake Boundary Conditions

ramirezjj C:\Users\ramirezjj\Documents\51115 USACE\102849 Cambria\Figure 2-6_Location of Aquifer Tests.mxd 3/28/2014

This page intentionally left blank.

Constant head deep layers

Constant head layer 1

Cambria Emergency Water Supply Project
TO1: Geo-Hydrological Model

CDM Smith

Figure 4-9
Location of Constant Head Boundary Conditions

ramirezjj C:\Users\ramirezjj\Documents\51115 USACE\102849 Cambria\Figure 2-6_Location of Aquifer Tests.mxd 3/28/2014

This page intentionally left blank.

0 250 500 1,000
Feet

Cambria Emergency Water Supply Project
TO1: Geo-Hydrological Model

Figure 4-10
Location of Pumping Wells

CDM Smith

ramirezjj O:\51115_USACE-KansasCity\102849\Figure4-10_LocationPumpingWells.mxd 4/28/2014

This page intentionally left blank.

0 250 500 1,000
Feet

CDM Smith

Cambria Emergency Water Supply Project
TO1: Geo-Hydrological Model

Figure 4-11
Location of Wells with Water Level Measurements

ramirezjj O:\51115_USACE-KansasCity\102849\Figure4-11_WellswWaterLevelMeasurements.mxd 4/28/2014

This page intentionally left blank.

Section 5
Calibration

5.1 Model Calibration

A well calibrated model was developed in 2007 (Yates and Van Konynenburg, 1998) that was used as the basis for development of the current model. The groundwater flow model was calibrated by identifying sensitive characteristics with the greatest uncertainties, and varying those parameters systematically within this range of uncertainty to obtain a reasonable match between field observations and model simulated results. Hydraulic characteristics have the greatest uncertainty, since initial estimates are made at a limited number of locations, using a variety of testing methods. The initial distribution of hydraulic conductivity from the 2007 provided a reasonable match to field observations and was largely retained for this model. Additional calibration was conducted for specific yield, due to its importance for this project.

Conditions for the 2000 to 2002 period for pumping and recharge were configured from the site data and used to simulate the corresponding period. Since stream-flow occurred during 2000, prior to the formal calibration period, stable conditions prevailed in the model for the 2001 and 2002 periods that were used for the calibration. Simulations were run varying hydraulic characteristics and no significant improvement was obtained by changing hydraulic conductivity from the configuration consistent with the 2007 model.

Figure 5-1 shows a sensitivity analysis for variation of specific yield, which indicates a minimum error measure (mean of absolute value of residuals) was obtained at a specific yield of 0.16. The current model has considerably greater discretization to facilitate the transport analysis, but retains many of the characteristics of the 2007 model. A significant update included the incorporation of surveyed elevations for stream channels and the lagoon area.

5.2 Calibration results

Figure 5-2 provides an overall comparison of the final calibrated model results for corresponding field measurements. This figure plots model calculated water levels versus the field measurements for the corresponding locations and times. The 45 degree line shows a perfect agreement between the model and field measurements, while the actual scatter around this line represents the difference between modeled and measured conditions. This difference is the residual. **Figure 5-3** shows a histogram of the residuals (modeled – measured) for the calibration data set.

Several statistical measures of residuals were computed to summarize the ability of the model to represent field conditions. The mean residual value (Σ(modeled – observed)/n) was -0.48 feet, with a standard deviation of 1.72 feet. The median residual value was -0.2 feet. The range in water levels observed in the data set was from 5.4 to 57.8 feet. A standard measure of calibration is given by the RMS error/ data range, which should be less than ten percent. The RMS error in the calibration data set is 1.78, yielding a value for RMS error/data range of 3.4 percent, which meets the acceptance criteria.

Another comparison measure for the calibration is comparisons of observed water levels and modeled water levels plotted as hydrographs at individual wells. These hydrographs are available at the locations previously shown on Figure 4-11**. Figures 5-4** through **Figures 5-15** provide hydrographs from the eastern portion toward the western limit just upgradient of the fresh water lagoon.

The irrigation wells in the eastern portion of the basin typically show the greatest residuals, particularly during the later portion of 2002. This may be due to overestimation of the quantity of lateral boundary inflow or underestimation of the quantity of pumping in the upper basin. These wells are upgradient of the area of primary concern where water supply alternatives will be implemented. The area from immediately upgradient of the CCSD well field to the fresh water lagoon show very good agreement between the model and observed water levels. Limited data were available in the upper reaches of Van Gordon Creek. However, inconsistencies between estimated pumping and responses at the single well with periodic measurements indicate that a reliable calibration of this drainage is not possible. This area also has minimal interaction with the area of interest due to the lower permeability and limited groundwater flow.

The model calibration is acceptable for use in the assessment of alternatives.

5.3 Water Budget

The water budget for the model for the 2001–2002 period is summarized in **Table 5-1.** The components that are specified input values are in a bold font on this table. A negative value, (in parenthesis), indicates a net removal from the aquifer, while a positive is an inflow to the aquifer.

Table 5-1 Summary of Water Budget Components for 2001-2002 Calibration Period

Component	Annual Volume (AF)
Storage	(315)
Ocean Boundary	(251)
Recharge	**881**
Stream Seepage	806
Fresh Water Lagoon Seepage	(103)
Well Pumping	**(1015)**
Difference	2

During the calibration period, the sources of recharge, including precipitation recharge, irrigation return flows, percolation pond infiltration, lateral boundary inflow and seepage from San Simeon Creek, was 1687 AF/year. The primary outflow from the aquifer was associated with pumping for municipal and agricultural use. Outflows of groundwater to the ocean and to the fresh water lagoon were 354 AF/year, with a decrease in storage of 315 AF/year during this period.

On a long-term average basis, the change in storage is expected to be negligible, since the basin is recharged each season from stream seepage. The water budget components differ from the 1988-1989 conditions simulated in the USGS report, since many of the model inputs, including stream flow duration and pumping rates were updated.

5.4 Sensitivity Analysis

A sensitivity analysis was conducted assessing sensitivity to specific yield and to hydraulic conductivity. As noted above, specific yield was a sensitive parameter and a value of 0.16 was selected since this resulted in the minimum RMS error. A sensitivity run was also conducted to assess the impact of decreasing hydraulic conductivity throughout the model by 20 percent. This sensitivity test showed that when the hydraulic conductivity was decreased by 20 percent, the average absolute value of the residuals increased by 16 percent compared to the selected calibration values.

5.5 Model Uncertainties and Limitations

All mathematical models are simplified representations of very complex natural systems. The model is configured using a limited number of borings to assess the distributions of lithologies in the subsurface. Factors such as the lateral boundary inflow, connection with the ocean, configuration of the aquifer west of the shoreline and other factors are uncertain and have no direct field data for their characterization. The model provides a reasonable approximation of the aquifer response during calibration periods and provides a tool for assessing alternatives. The model should be refined in the future when significant changes in water use in the basin occur after implementation of the selected emergency water supply alternative to refine operational parameters.

This page intentionally left blank.

Cambria Emergency Water Supply Project
TO1: Geo-Hydrological Model

CDM Smith

Figure 5-1
Specific Yield Sensitivity Analysis

ramirezjj C:\Users\ramirezjj\Documents\51115 USACE\102849 Cambria\Figure 2-6_Location of Aquifer Tests.mxd 3/28/2014

This page intentionally left blank.

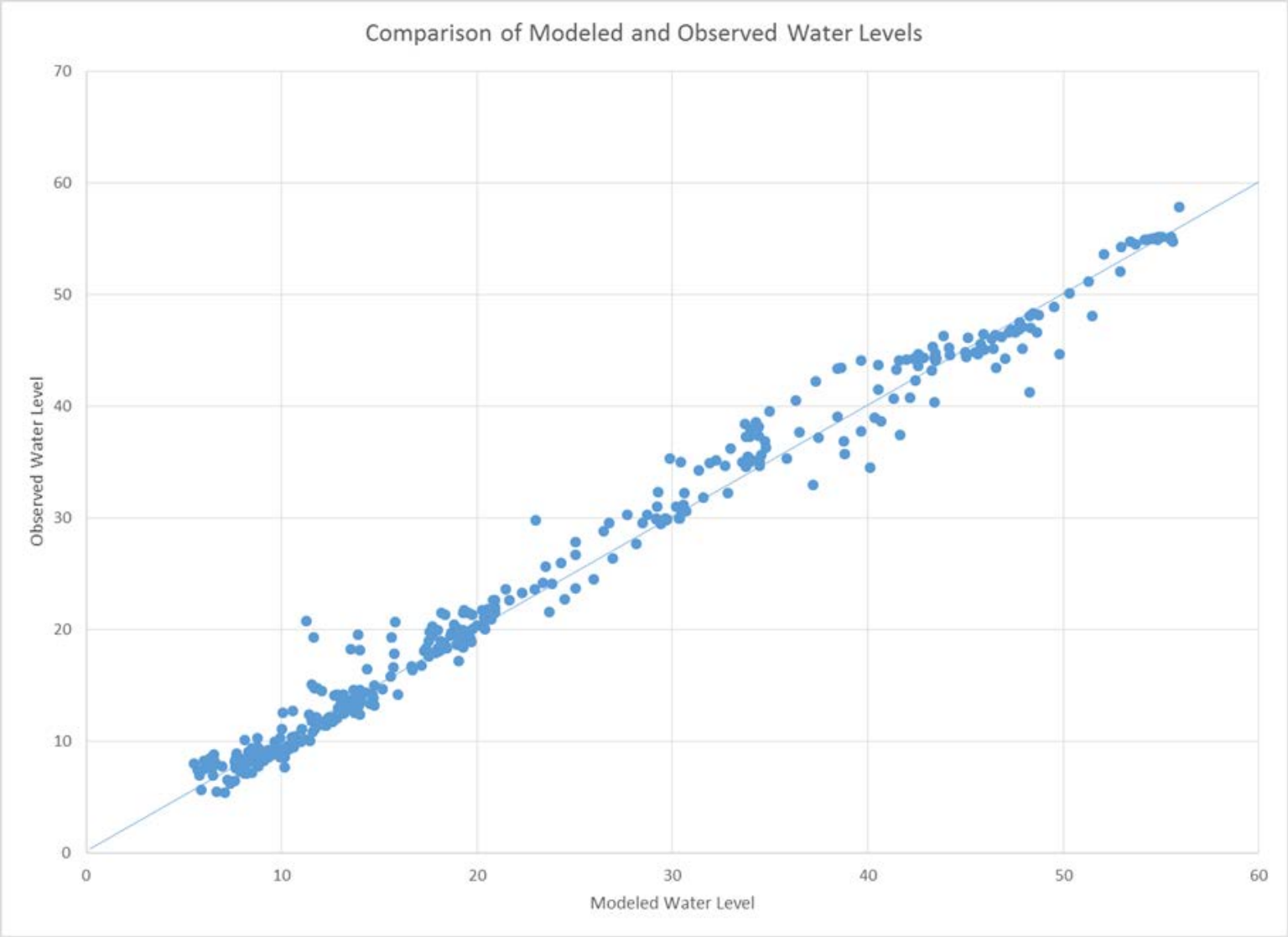

Cambria Emergency Water Supply Project
TO1: Geo-Hydrological Model

CDM Smith

Figure 5-2

Comparison of Modeled and Field Measured Water Levels During the 2001 to 2002 Calibration Period

ramirezjj C:\Users\ramirezjj\Documents\51115 USACE\102849 Cambria\Figure 2-6_Location of Aquifer Tests.mxd 3/28/2014

This page intentionally left blank.

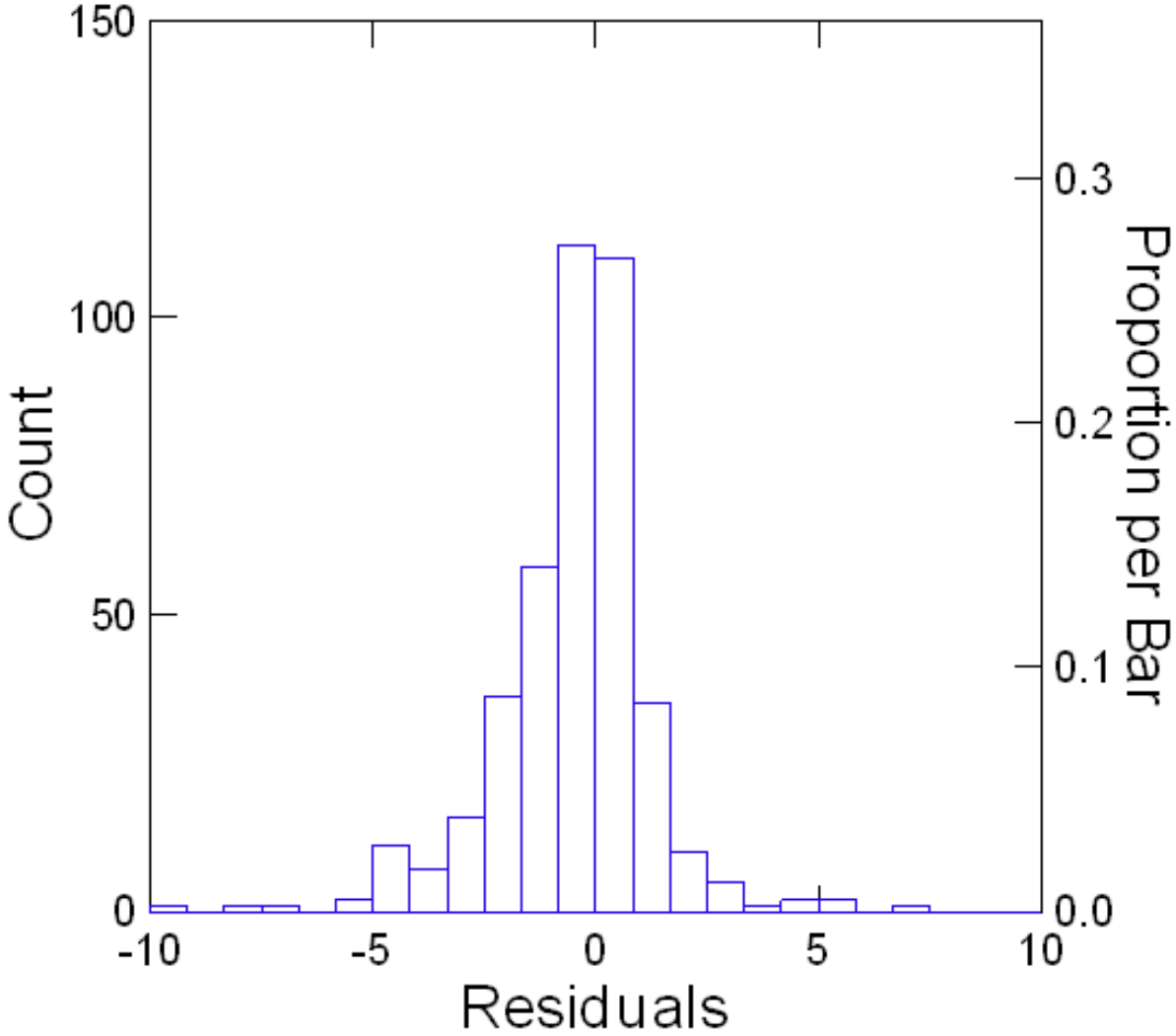

Cambria Emergency Water Supply Project
TO1: Geo-Hydrological Model

CDM Smith

Figure 5-3
Histogram of Model Residuals

ramirezjj C:\Users\ramirezjj\Documents\51115 USACE\102849 Cambria\Figure 2-6_Location of Aquifer Tests.mxd 3/28/2014

This page intentionally left blank.

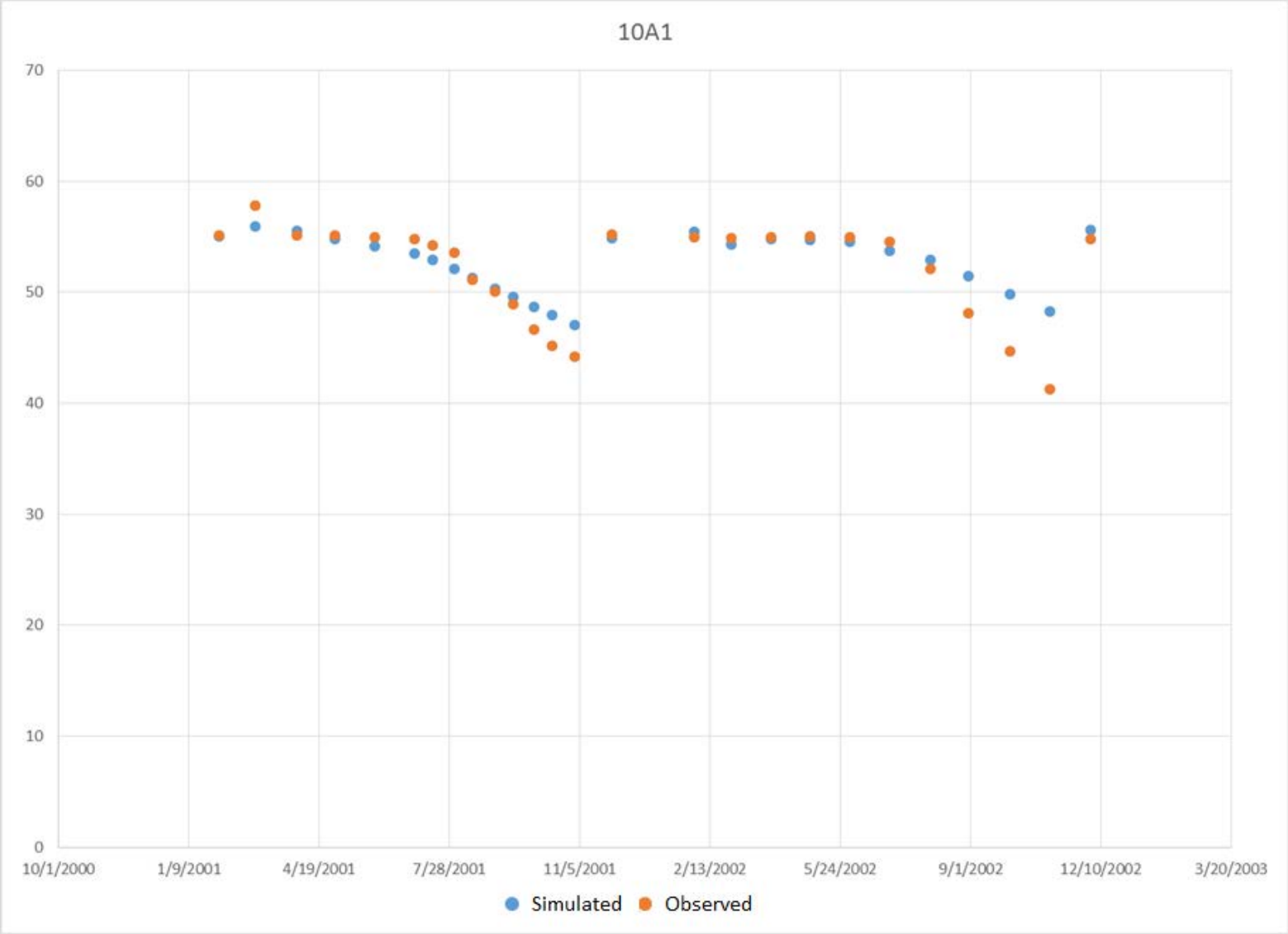

Cambria Emergency Water Supply Project

TO1: Geo-Hydrological Model

Figure 5-4

Observed and Modeled Hydrographs at Well 10A1

CDM Smith

ramirezjj C:\Users\ramirezjj\Documents\51115 USACE\102849 Cambria\Figure 1-1_Location of Study Area with Significant Site Features.mxd 3/28/2014

This page intentionally left blank.

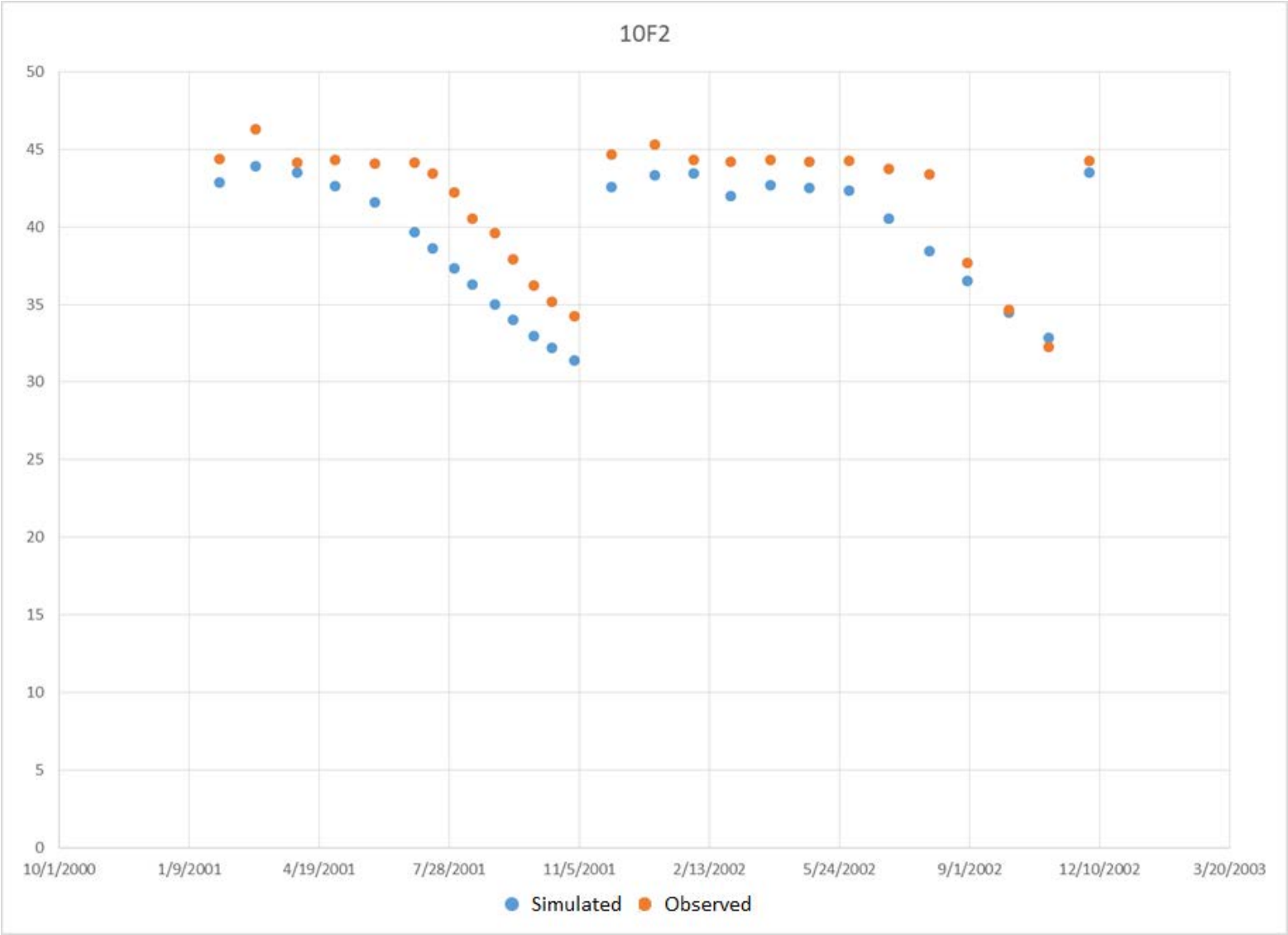

Cambria Emergency Water Supply Project

TO1: Geo-Hydrological Model

Figure 5-5

Observed and Modeled Hydrographs at Well 10F2

CDM Smith

ramirezjj C:\Users\ramirezjj\Documents\51115 USACE\102849 Cambria\Figure 1-1_Location of Study Area with Significant Site Features.mxd 3/28/2014

This page intentionally left blank.

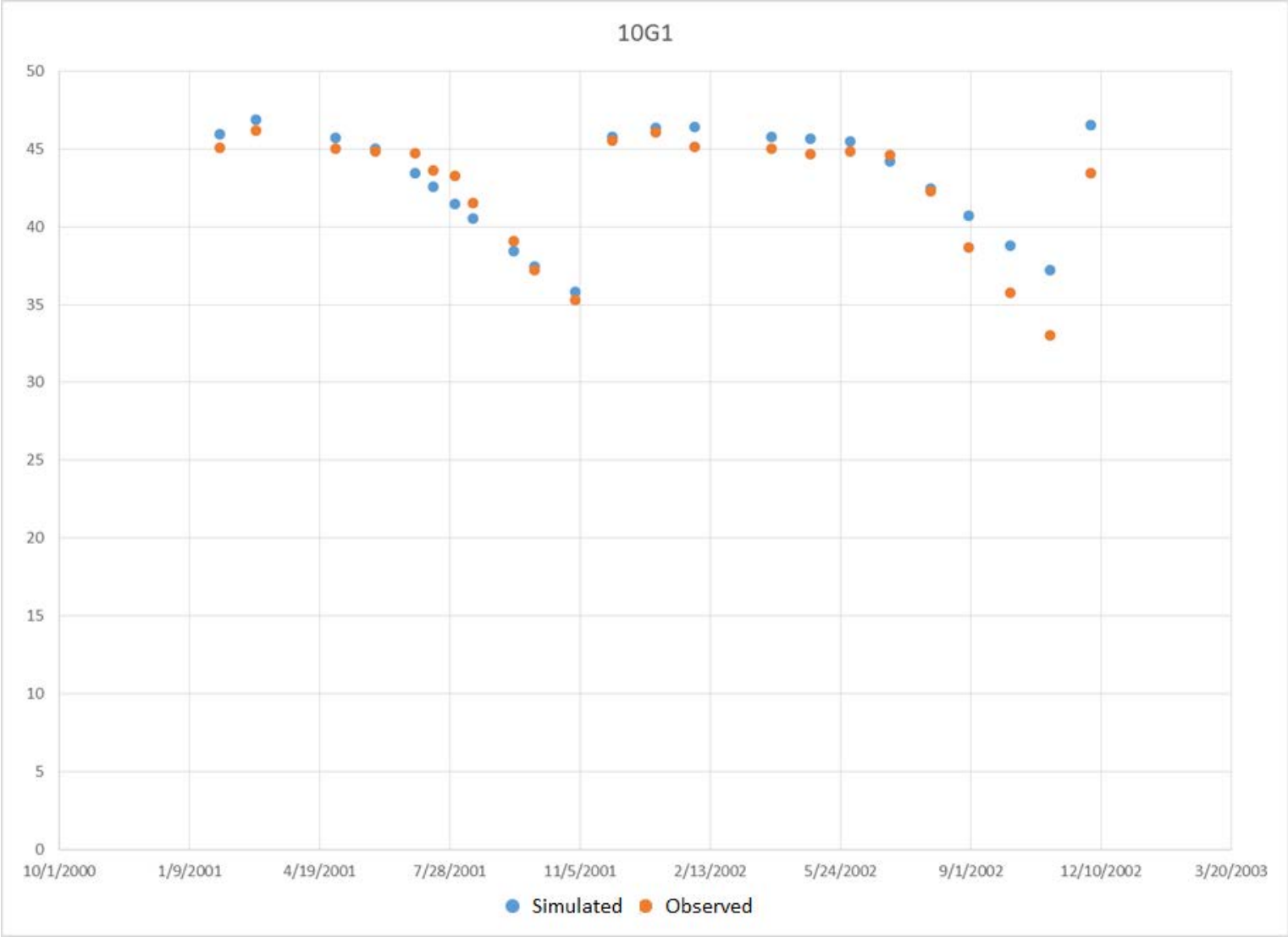

Cambria Emergency Water Supply Project

TO1: Geo-Hydrological Model

Figure 5-6

Observed and Modeled Hydrographs at Well 10G1

CDM Smith

ramirezjj C:\Users\ramirezjj\Documents\51115 USACE\102849 Cambria\Figure 1-1_Location of Study Area with Significant Site Features.mxd 3/28/2014

This page intentionally left blank.

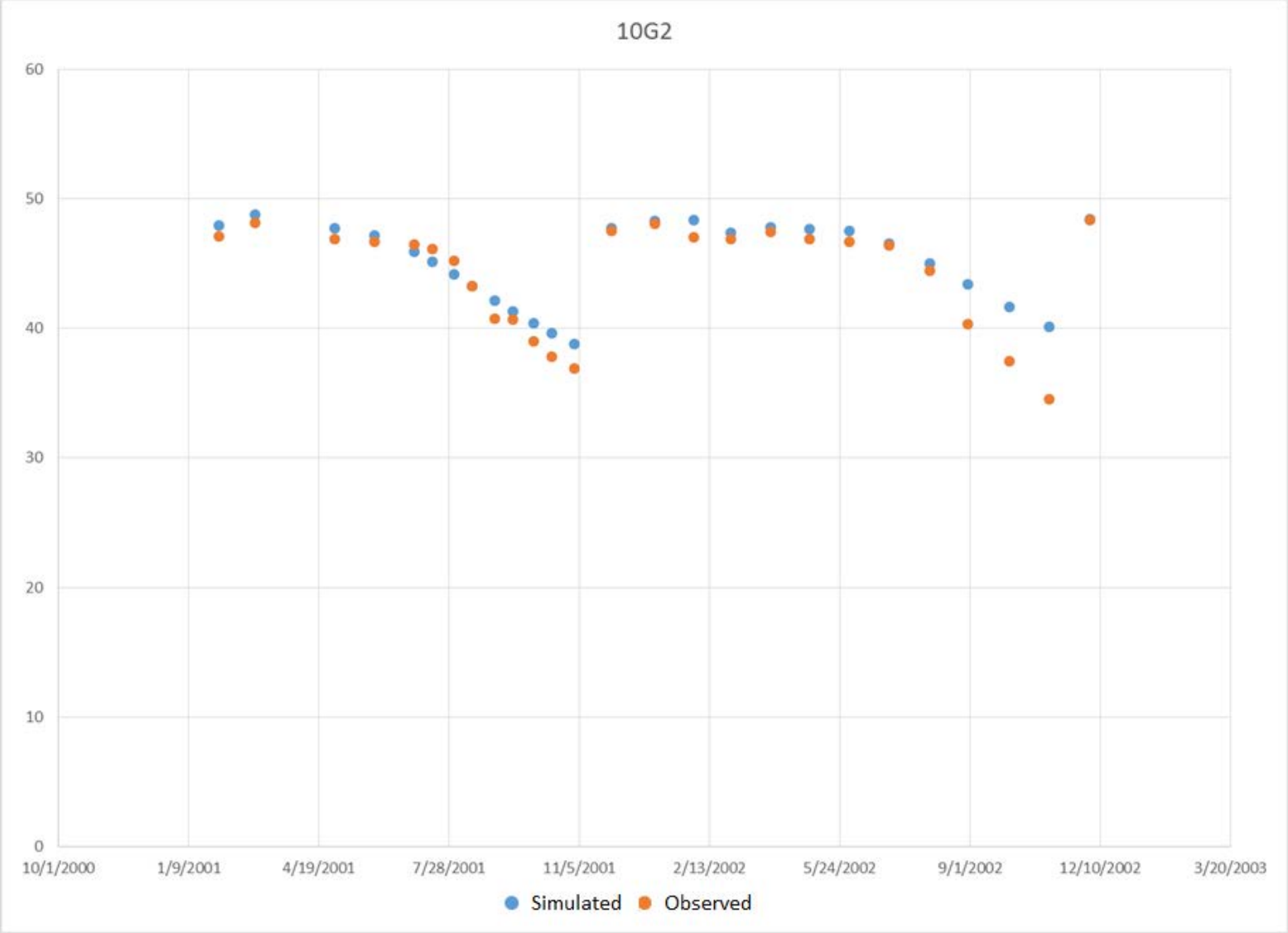

Cambria Emergency Water Supply Project

TO1: Geo-Hydrological Model

Figure 5-7

Observed and Modeled Hydrographs at Well 10G2

CDM Smith

ramirezjj C:\Users\ramirezjj\Documents\51115 USACE\102849 Cambria\Figure 1-1_Location of Study Area with Significant Site Features.mxd 3/28/2014

This page intentionally left blank.

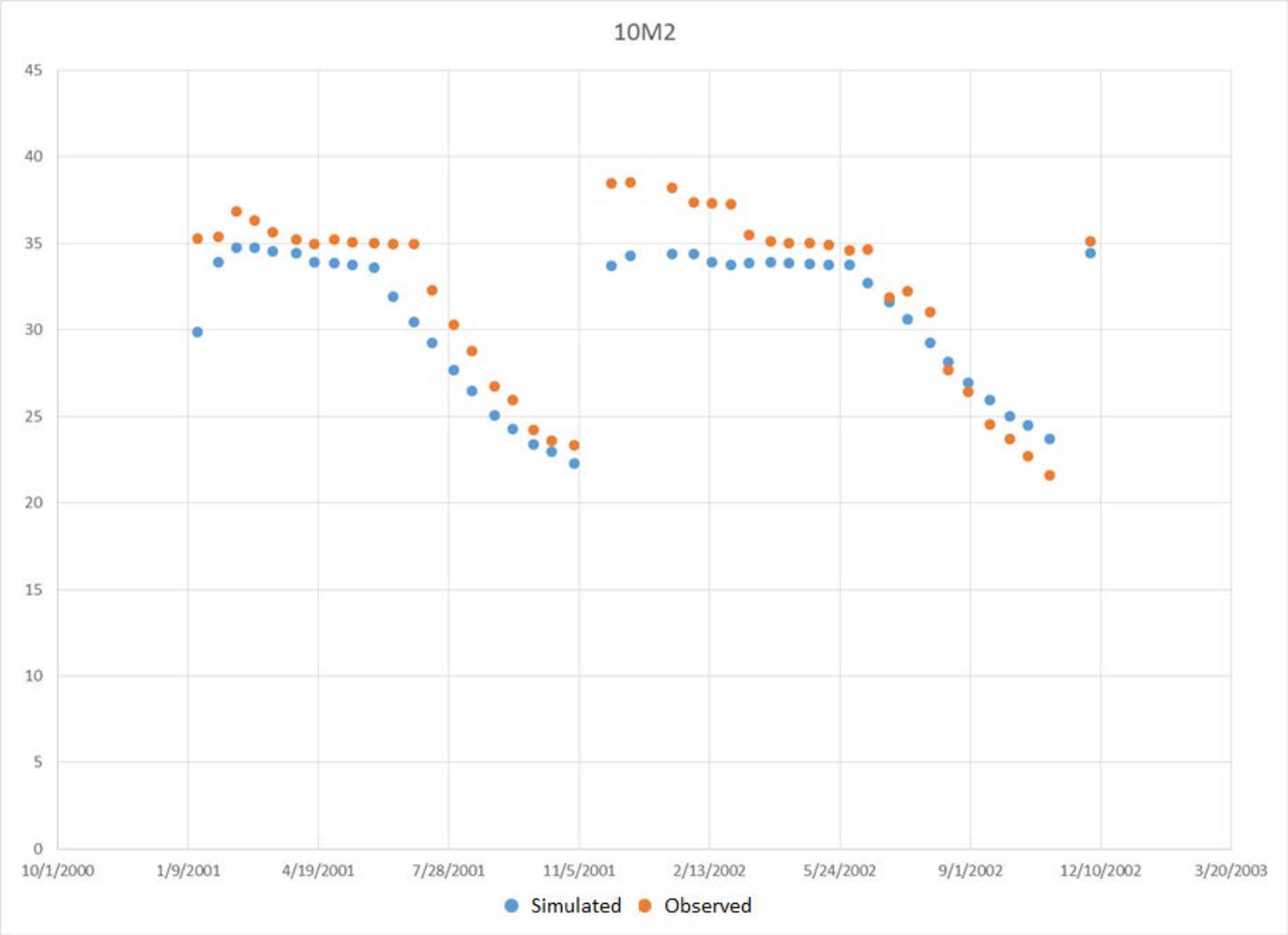

Cambria Emergency Water Supply Project

TO1: Geo-Hydrological Model

Figure 5-8

Observed and Modeled Hydrographs at Well 10M2

CDM Smith

ramirezjj C:\Users\ramirezjj\Documents\51115 USACE\102849 Cambria\Figure 1-1_Location of Study Area with Significant Site Features.mxd 3/28/2014

This page intentionally left blank.

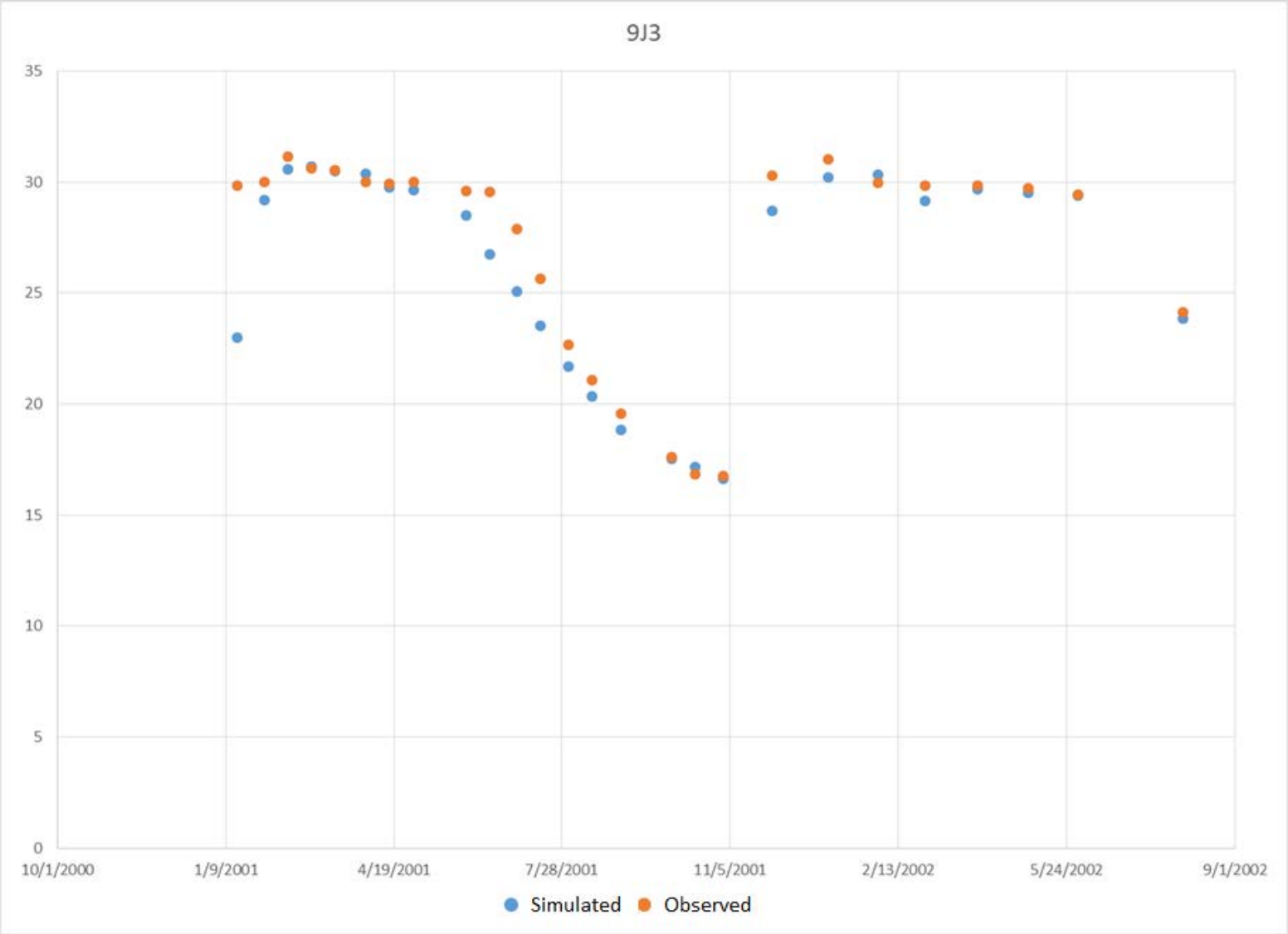

Cambria Emergency Water Supply Project
TO1: Geo-Hydrological Model

Figure 5-9
Observed and Modeled Hydrographs at Well 9J3

CDM Smith

ramirezjj C:\Users\ramirezjj\Documents\51115 USACE\102849 Cambria\Figure 1-1_Location of Study Area with Significant Site Features.mxd 3/28/2014

This page intentionally left blank.

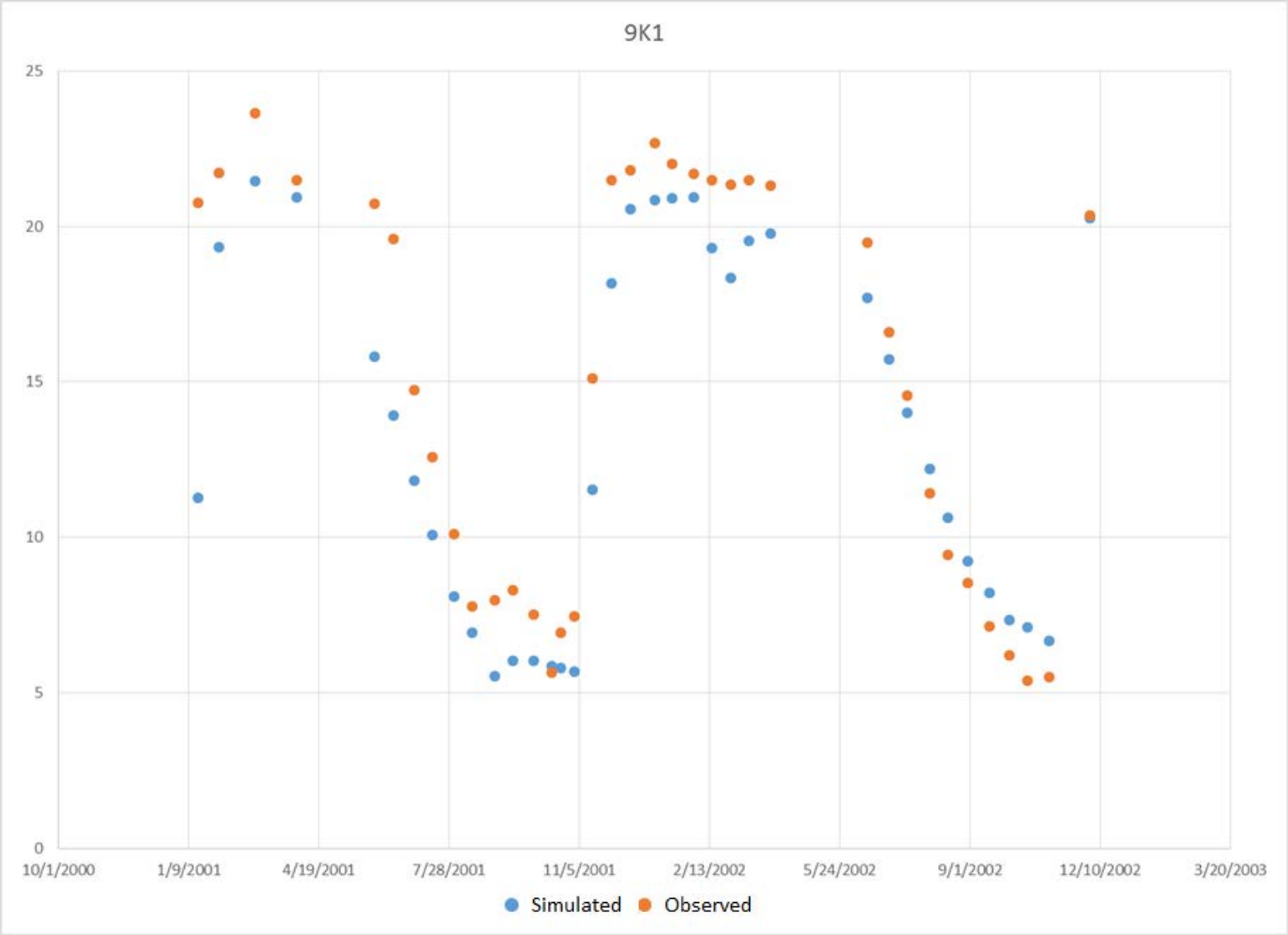

Cambria Emergency Water Supply Project

TO1: Geo-Hydrological Model

Figure 5-10

Observed and Modeled Hydrographs at Well 9K1

CDM Smith

ramirezjj C:\Users\ramirezjj\Documents\51115 USACE\102849 Cambria\Figure 1-1_Location of Study Area with Significant Site Features.mxd 3/28/2014

This page intentionally left blank.

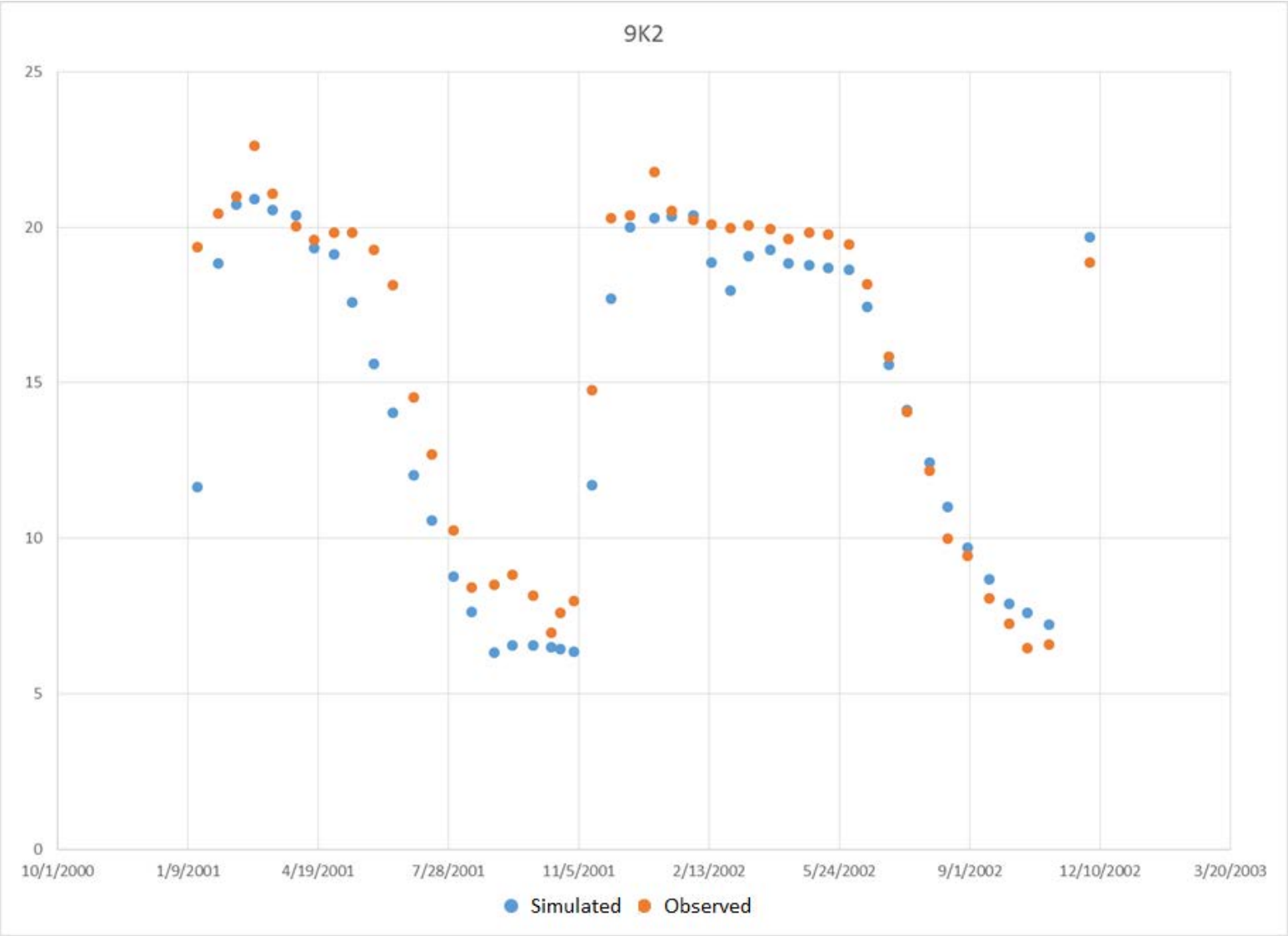

Cambria Emergency Water Supply Project

TO1: Geo-Hydrological Model

Figure 5-11

Observed and Modeled Hydrographs at Well 9K2

CDM Smith

ramirezjj C:\Users\ramirezjj\Documents\51115 USACE\102849 Cambria\Figure 1-1_Location of Study Area with Significant Site Features.mxd 3/28/2014

This page intentionally left blank.

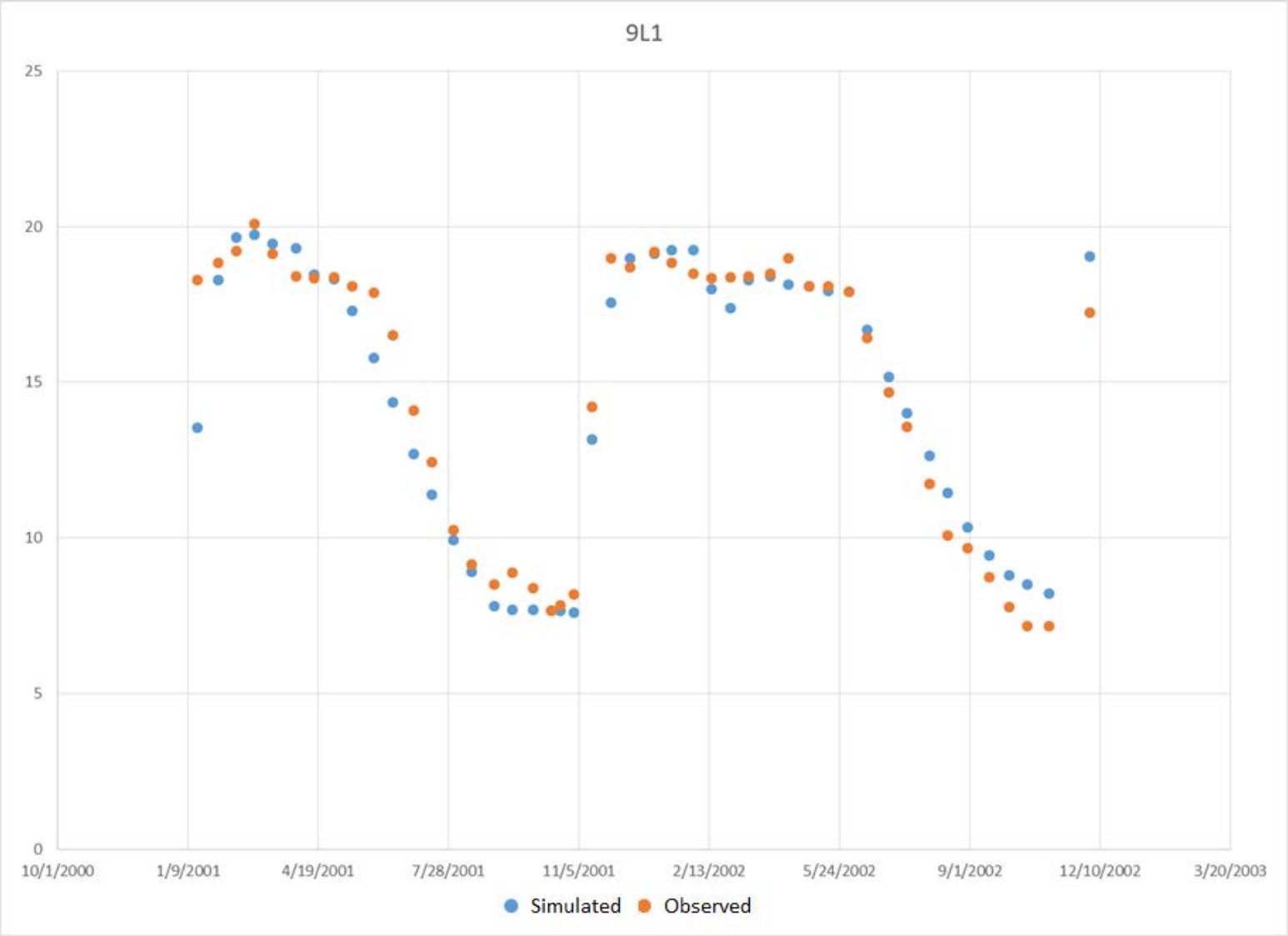

Cambria Emergency Water Supply Project

TO1: Geo-Hydrological Model

Figure 5-12

Observed and Modeled Hydrographs at Well 9L1

CDM Smith

ramirezjj C:\Users\ramirezjj\Documents\51115 USACE\102849 Cambria\Figure 1-1_Location of Study Area with Significant Site Features.mxd 3/28/2014

This page intentionally left blank.

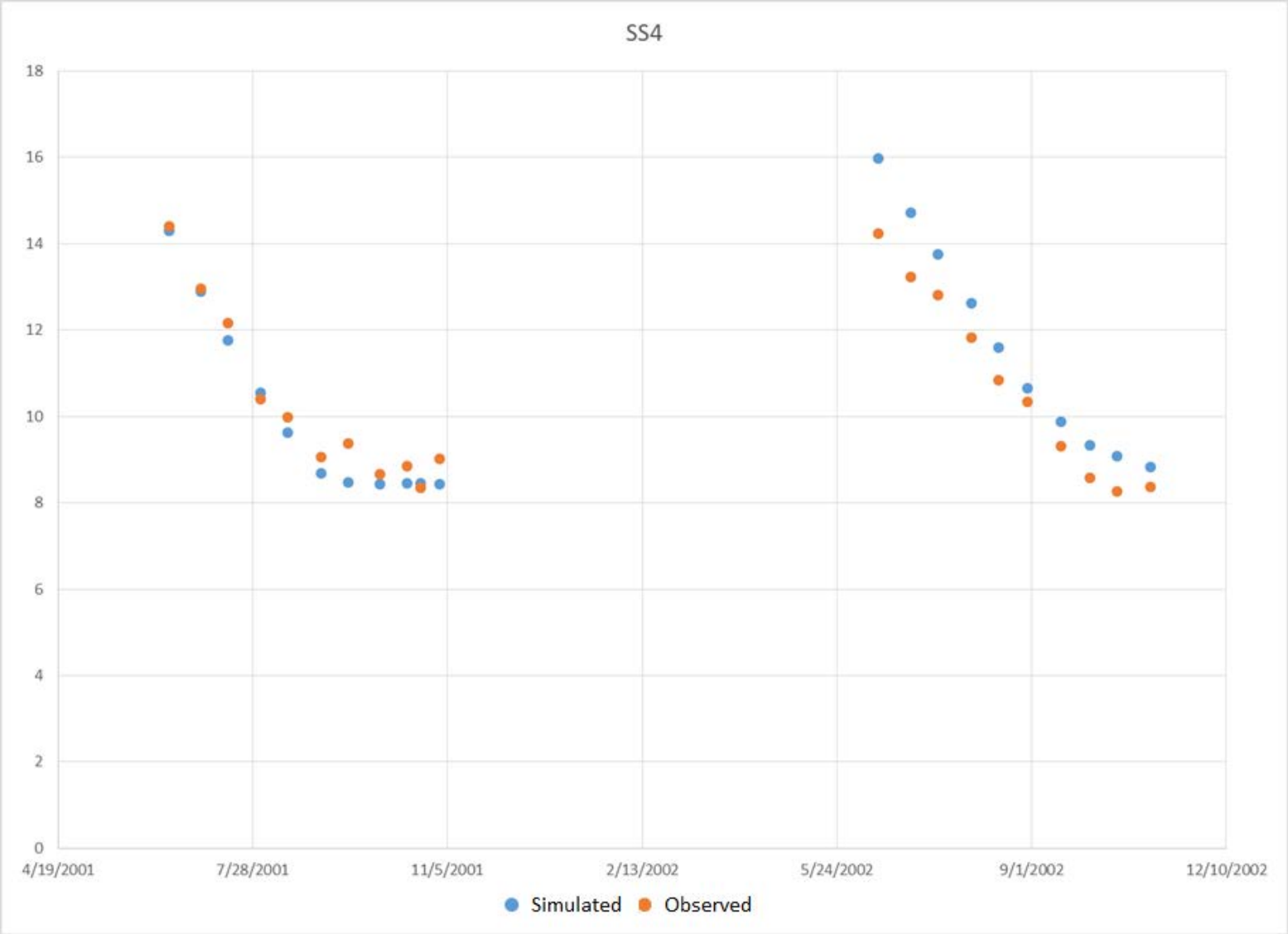

Cambria Emergency Water Supply Project

TO1: Geo-Hydrological Model

Figure 5-13

Observed and Modeled Hydrographs at Well SS4

CDM Smith

ramirezjj C:\Users\ramirezjj\Documents\51115 USACE\102849 Cambria\Figure 1-1_Location of Study Area with Significant Site Features.mxd 3/28/2014

This page intentionally left blank.

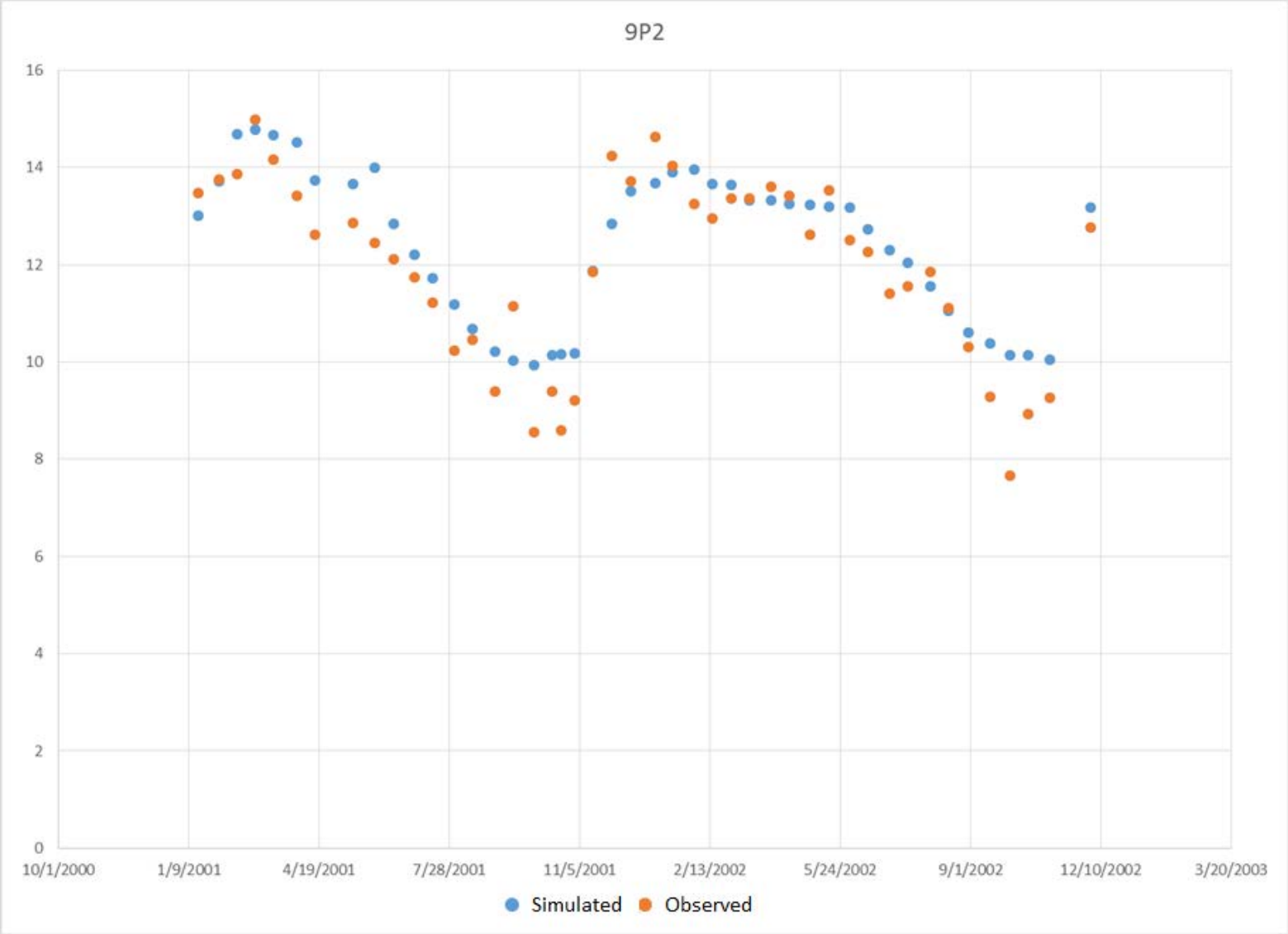

Cambria Emergency Water Supply Project

TO1: Geo-Hydrological Model

Figure 5-14

Observed and Modeled Hydrographs at Well 9P2

CDM Smith

ramirezjj C:\Users\ramirezjj\Documents\51115 USACE\102849 Cambria\Figure 1-1_Location of Study Area with Significant Site Features.mxd 3/28/2014

This page intentionally left blank.

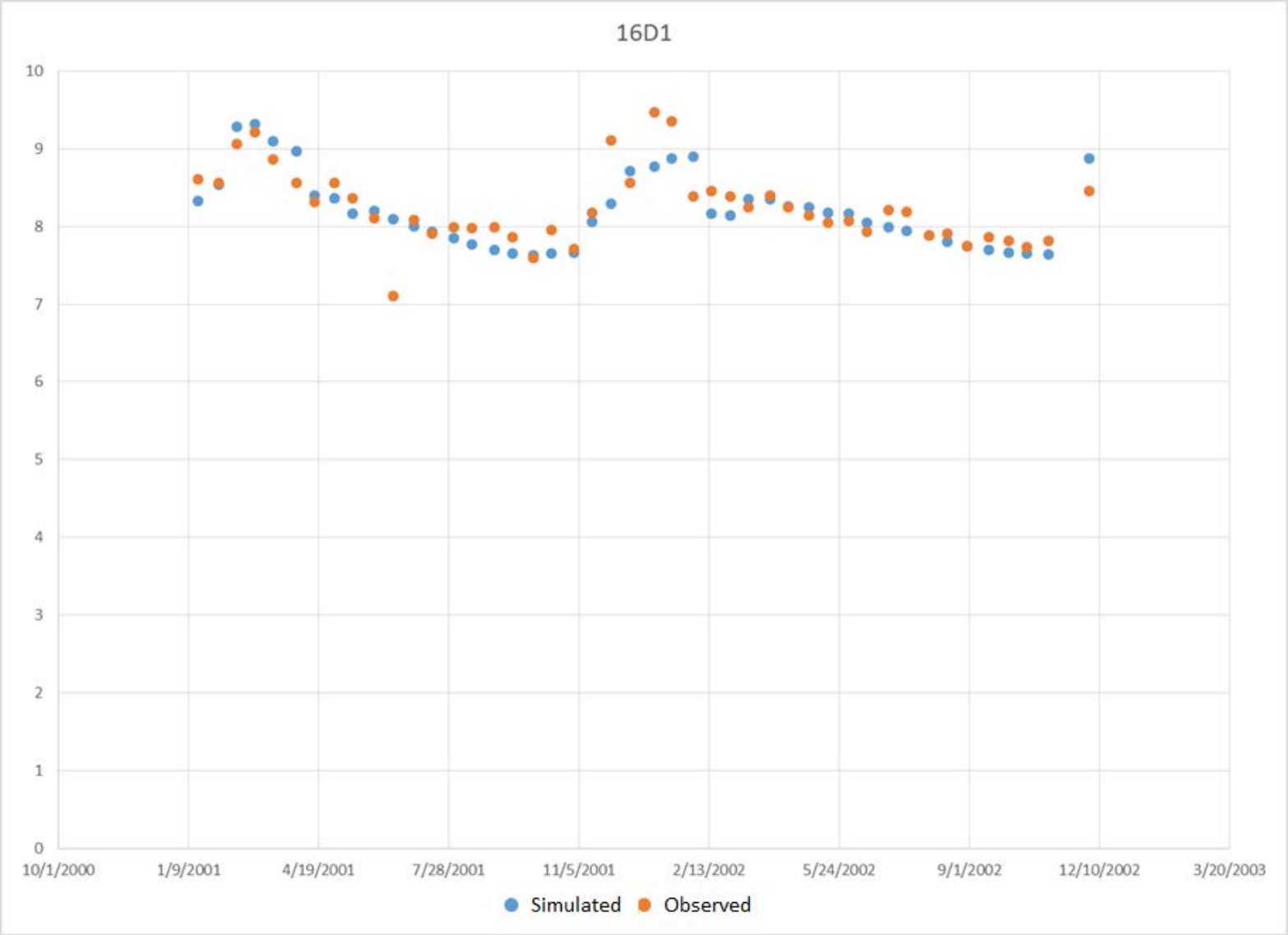

Cambria Emergency Water Supply Project
TO1: Geo-Hydrological Model

Figure 5-15
Observed and Modeled Hydrographs at Well 16D1

CDM Smith

ramirezjj C:\Users\ramirezjj\Documents\51115 USACE\102849 Cambria\Figure 1-1_Location of Study Area with Significant Site Features.mxd 3/28/2014

This page intentionally left blank.

Section 6
Alternatives Analysis

A series of alternatives were defined to address short term emergency water supply for CCSD in the San Simeon basin. These alternatives are focused on development of additional emergency water supply by optimizing recovery of fresh and brackish water in the basin. Currently, significant quantities of fresh water discharge to the ocean. The secondary treated wastewater that is percolated into the aquifer is lost to the ocean or discharges to surface water in the western portion of the basin. A series of simulations were defined to assess the ability to recover additional groundwater and meet requirements for residence time for indirect potable reuse of wastewater affected groundwater in the basin, while also providing for habitat mitigation in the fresh water lagoon.

The assumptions for basin recharge for all of the emergency supply alternatives were identical to allow comparisons to be made. The period incorporated stream flow conditions starting in December 2012 through March 2014 using records from the gaging station in the lower portion of San Simeon Creek. Agricultural pumping rates and return flows were assumed to remain at the rates estimated in the 2007 analysis (Yates, 2007), which were also used during the calibration period. Operational data from CCSD for pumping and percolation pond discharge were obtained from records for the period through February 2014. This simulation period was selected for evaluation of the emergency water supply alternatives since it represents the current drought conditions.

Each of the alternatives will also require disposal of brines from the treatment process. However, brine disposal for the emergency supply alternatives assumes brine evaporation processes from lined ponds and does not interact with the aquifer and is not simulated. Alternatives were simulated using monthly stress periods. The solute transport model tracked the fate of secondary treated waste water and highly treated injected water by simulating movement of a hypothetical tracer compound at a concentration of 100 mg/L. The extent of the tracer over time was assessed by examination of contour maps. The calculated concentrations of the hypothetical tracer at CCSD potable water supply wells was tracked in the model to assess the residence time that the highly treated water remained in the aquifer prior to recovery at the supply wells.

Two sets of emergency water supply alternatives have been considered including two direct potable supply alternatives and two indirect potable reuse alternatives. To qualify for direct potable supply, content of the percolated secondary effluent in the basin water needs to be less than five percent. Otherwise, the basin water will be considered as reclaimed wastewater requiring treatment as it is required for the indirect potable reuse.

For wells that receive recharge from injection of the highly treated basin water, a residence time estimated by modeling needs to be greater than 120 days, which is a safety factor of two over the required field verified residence time of 60 days. The alternatives are described and results of the analysis are presented in following sections. Detailed presentation of simulation results is only presented for the potentially viable alternatives.

6.1 Emergency Alternative 1 (Direct Potable Supply)

This alternative would recover water from the deep portion of the alluvial aquifer for advanced treatment and direct potable supply in the system. This alternative would require that the produced

water contain less than five percent water that originated from the percolation ponds. **Figure 6-1** shows the location of the new supply well for this alternative, which would be located on CCSD owned property just east of Van Gordon Creek and in the vicinity of the existing Wells 9N2 and 9N3.

This alternative was simulated using the standard conditions by configuring a new pumping well in only the lower portion of the aquifer and pumping the new supply well at 185 gpm, which would yield 150 gpm after advanced treatment. The design concept for this alternative was to assess the potential for obtaining water from the deeper portion of the aquifer in order to minimize production of secondary treated effluent from the percolation ponds. The existing CCSD well field would be pumped at 260 gpm, for a total potable yield of 410 gpm. Shallow recharge to support the fresh water lagoon would be done by injecting 100 gpm into the shallow aquifer near the upper extent of the lagoon, resulting in a potable water supply of 310 gpm for the CCSD distribution system.

The simulation results indicate that pumping at this location would result in development of significant vertical gradients that would induce movement of the percolated secondary treated wastewater to this well. The natural gradients also indicate that past operations at the percolation ponds have likely impacted these deeper zones, thus the criteria for less than five percent wastewater content will not be met with this alternative.

Figure 6-2 illustrates the movement of percolated wastewater in the groundwater system for a hypothetical tracer injected in the percolating treated wastewater after 270 days. Since the percolation ponds have been operating for several decades, this wastewater is present through the thickness of the aquifer and insufficient isolating strata are present to prevent this downward movement. This alternative is not viable.

6.2 Emergency Alternative 2 (Direct Potable Supply)

This alternative is similar to alternative 1, with the exception that the supplemental production well is sited near the beach area on property that is not controlled by CCSD, as shown on **Figure 6-3**. This supplemental well would also have to be pumped at a higher rate, since the TDS is higher, which will decrease the recovery efficiency of the treatment system. This well would also have to meet the criteria of not producing water with more than a five percent content of the percolated waste water in order for the treated water to be directly used.

The results of this simulation also indicate that significant quantities of waste water are present throughout the aquifer, and operation of the well would induce vertical movement of groundwater from the entire thickness of the aquifer. This alternative is also not viable due to a wastewater content greater than five percent. This well location would also produce very high TDS water, which would result in a lower recovery percentage for treated water. Recent measurements at well 8R3 in the area of this alternative indicates that the groundwater has a TDS of about 5,000 mg/L, and pumping in this area would lead to an increase in TDS.

6.3 Emergency Alternative 3 (Indirect Potable Reuse)

This alternative would pump groundwater near the percolation ponds at a rate of about 500 gpm, use advanced treatment with an estimated 92 percent recovery efficiency and re-inject this water up-gradient of the existing well field. **Figure 6-4** shows the configuration of this alternative. This water would be injected down-gradient of existing irrigation wells and upstream of the CCSD well field to minimize loss of the treated water to other users.

The objective of this alternative is to provide a source of recharge for beneficial use of the secondary treated waste water that would otherwise be lost to the ocean. The simulation results indicated that travel times to the closest CCSD production well will not meet the criteria of 120 days of residence time with an injection well located down-gradient of the irrigation wells. This is due to the short distance available to avoid losses to the irrigation wells and a narrowing of the bedrock valley that result in higher groundwater velocities in this area. The criteria could be met by moving the injection well up-gradient of these irrigation wells, however, this would result in loss of injected water under drought conditions to the irrigation wells when they are pumping. This alternative is potentially viable with a move to a further up-gradient location and resolution of the potential loss of highly treated water to irrigators.

6.4 Emergency Alternative 4 (Indirect Potable Reuse)

This alternative is designed to maximize recovery of the percolated secondary treated wastewater while maintaining a mound to avoid movement of percolated waste water toward the existing well field. This alternative is summarized on **Figure 6-5**. Existing well 9P7, located within the percolation pond area, will be pumped at 710 gpm and will undergo advanced water treatment. A new injection well located between the percolation ponds and the existing CCSD well field will receive 485 gpm, while 100 gpm will be infiltrated near the fresh water lagoon to maintain its viability. Wells SS1 and SS2 would be pumped at 227 gpm each to supply CCSD demands. Well SS3 will not be operational when the basin receives the injected water from the advanced water treatment plant due to its proximity to the recharge well. This conservative assessment assumes that the emergency operations would continue for over a year, assuming that no significant runoff occurs in San Simeon Creek.

Since this alternative meets the selection criteria, detailed simulation results are presented. In order to assess the residence time, a hypothetical tracer was injected with the water at the new injection well location. The areal extent of this tracer was tracked in the model and the simulated tracer concentration in CCSD wells SS1 and SS2 summarized. **Figure 6-6** through **Figure 6-12** show a plan view extent of simulated tracer concentration greater than ten percent of the injected concentration the aquifer at 30 day intervals through 210 days of operations. These figures are a visualization through all of the model layers and represent the maximum extent of the ten percent contour in all of the layers. **Figure 6-13** shows the simulated water level after one year of operations, illustrating the mounding at the injection well with radial flow along the aquifer extent both toward the CCSD supply wells and toward the percolation ponds.

Figure 6-14 shows the simulated breakthrough curve for simulated tracer concentration at wells SS1 and SS2 under pure advective flow conditions. Based on this simulation, the estimated residence time from the injection well to well SS2 is 133 days, which exceeds the criteria time of 120 days, which include the 2 times safety factor over the regulatory target residence time of 60 days. The current draft regulations indicate that with the degree of treatment proposed, a residence time of 60 days, confirmed by a tracer study, will meet the requirements for indirect potable reuse. This alternative has the disadvantage of recirculating a significant quantity of water back to the source well at the percolation ponds where it would be repumped and retreated. Some of this recirculated water would also maintain water levels in the lower basin, which will be beneficial for habitat mitigation at the fresh water lagoon. Approximately 60 percent of the water produced at wells SS1 and SS2 would originate from the injection well during the simulated 1.25 years of operation. The breakthrough curves on Figure 6-14 indicate that half of the water produced at wells SS1 and SS2 would originate from the highly treated water recharged to the basin by between 160 and 200 days for the range of assumptions simulated. The percentage of recovery would increase for longer durations under more

extreme drought conditions, as basin inflow decreases. If the emergency alternative is operated for only a period of 3 months, all of the water produced by wells SS1 and SS2 would originate from the basin, since the reinjected water would still be in transit from the recharge well, however, the mounding created at the recharge well would serve to maintain a protective westward gradient, and decrease the rate of water level decline at the production wells.

In order to assess uncertainties in the projections of residence time for this alternative, a series of sensitivity analyses were conducted. The sensitivity analyses included assessing the impact of a significant decline in basin sources of recharge, including native precipitation and lateral boundary inflow. These factors were decreased to half the value used in calibration. The effect of variations in groundwater velocity in the aquifer was assessed by adding the effect of dispersion. As noted earlier, the dispersion process accounts for uncertainties in groundwater velocity associated with small scale variations in the aquifer.

An additional sensitivity simulation decreased the effective porosity and included dispersion. This reasonable worst case simulation included a longitudinal dispersivity of 67 feet and an effective porosity of 0.14. This is a very conservative assessment. Figure 6-14 also shows the simulated tracer breakthrough curves for the base alternative and the three sensitivity simulations. The worst case simulations show that the ten percent breakthrough could occur in less than 120 days with the simulated location of the injection well. The location of the well will be moved slightly down-gradient during preliminary design so that a simulated breakthrough for the worst case simulation is beyond the criteria 120 days.

Maintaining the viability of the fresh water lagoon that is present in the lower reach of San Simeon is an important goal of the project. This viability will be maintained by infiltrating treated water in an area adjacent to the channel on CCSD property to support flow into the upper reach of the lagoon area. A preliminary estimate of 100 gpm was used as a basis to assess the potential for maintaining fresh water in the lagoon area during the drought conditions. The intention of mitigation is to avoid or minimize to the extent feasible negative impacts on the fresh water lagoon.

This fresh water lagoon support was assessed by comparing simulated water levels near the channel and fresh water injection wells to determine the extent to which this injection rate could support discharge to the channel and flow into the lagoon area. The lower extent of the lagoon near the beach has an invert elevation that is below mean sea level, so under extreme drought conditions, this lower reach will maintain a water level near mean seal level (~2.81 feet on the site datum), however, as the quantity of fresh water diminishes, the lagoon will become more saline.

Figure 6-15 shows a comparison of simulated shallow groundwater levels and the channel invert, which indicates that some discharge to the channel will occur for up to a year after commencement of the alternative. This plot assumes that alternative operations would start in late summer 2014. The quantity of water actually entering the channel will diminish over time as the drawdown in the shallow aquifer increases due to the drought and continued pumping of the basin. The rate of decline in water levels increases when irrigation pumping starts around day 300. The permeability of the lagoon deposits is unknown, so it may be necessary to provide increased discharge to the wells or directly to the channel if the drought persists for an extended period. If additional mitigation flow are required, then additional pumping from well 9P7 would be required.

The impact of the emergency operations on movement of brackish water inland from the ocean was assessed using the flow and transport model. A water balance from the simulation is shown on

Figure 6-16, which indicates that a small net discharge to the ocean will occur during the initial year of operations of the emergency alternative as storage is depleting in the basin. This figure also presents the net storage decline in the basin, since pumping will exceed the sources of recharge to the basin. The negative values for ocean outflow indicate a net discharge to the ocean, while the positive rates at month 12 of emergency operations indicate a reversal of flow and inducing a net inflow to the basin from the ocean. Depletions from storage occur through the simulated operating period.

Recent sampling of wells at the site indicated that the total dissolved solids (TDS) in groundwater have been elevated due to probable limited salt water intrusion. The secondary treated wastewater has helped to attenuate the increased TDS of the basin water. A profile of specific conductance was run at well 9P7 at the percolation ponds that indicated a TDS indicative of the treated waste water in the upper 25 feet of the aquifer, with deeper zones indicating possible impacts from limited saltwater intrusion. **Figure 6-17** shows a profile of TDS (primarily estimated based on specific conductance) extending from the beach area to the CCSD well field. A well cluster (9N2/9N3) did not indicate vertical differences in TDS. The values ranged from about 5000 mg/L at well 8R3 near the beach, to a range of 350 to 540 mg/L from the CCSD supply wells. The vertical profile data at 8R3 suggested that the well had been impacted by salt water in the past, either from flow within the aquifer or surface flooding, since the interval below the screen openings showed a TDS of about 23,500 mg/L.

Simulation of the effects of variable density was conducted using the SEAWAT model for this alternative, including the impacts of lower basin recharge, in order to validate the primary simulations using MODFLOW and MT3DMS. These simulations confirmed simulation results that were obtained using the equivalent fresh water head approach. The variable density model did show stratification of high TDS water near the base of the aquifer, however, for the 1.25 year simulated duration of emergency operations, the high TDS water did not migrate inland by a significant distance, and the closest wells near the percolation ponds are not impacted.

The simulations of TDS during operation of the emergency supply alternative was assessed using the equivalent fresh water head approach, since the more compute intensive variable density simulations indicated that this process was not required for the duration of the emergency water supply simulations. The ocean boundary was defined for the simulations as an equivalent fresh water head for each of the zones. Since the density of salt water is higher than for fresh water, as the height of the water column increases, the pressure at depth will be higher in salt water than in fresh water. The current distribution of concentrations of TDS in the aquifer was configured in MT3DMS and the emergency alternative was simulated to assess the water quality that would be produced at well 9P7, which is used as the supply well for the advanced treatment system. This provides a reasonable assessment of water quality since a net outflow to the ocean occurs through most of the simulation period. In order to develop a reasonable estimate of the impact of flow reversals from the ocean toward the 9P7 brackish extraction well, a constant concentration boundary was configured in the model between wells 8R3 and 9N2, with a concentration of 3,000 mg/L, which represents an average between these wells. The current observed data represents a long term average condition during a period when little recharge to the aquifer occurred.

Figure 6-18 shows the simulated TDS concentration at the brackish extraction well 9P7 for the emergency alternative. The simulated TDS at the start is about 800 mg/L, similar to what is observed in the percolated secondary treated wastewater. Over time, the concentration drops, since the capture zone of 9P7 includes up-gradient areas that have groundwater not impacted by either wastewater percolation and eventually recharge water that was injected at RIW1, which has a very low TDS

(simulated at 100 mg/L). Flow is induced up-gradient from the west off the ocean. However the higher TDS water that is in this area does not reach 9P7 over the 1.25 year duration of the assumed emergency operations. If emergency operations were to continue into the future with no runoff in San Simeon Creek, then this higher TDS water and eventually sea water would be induced to the area of 9P7. If this extreme drought condition were to occur, the steady-state TDS would be a blend of the percolated waste water, return flows from injection at RIW1 and sea water, with minor basin flow from up-gradient after several years. Under this extreme condition, the TDS could rise as high as 8,500 mg/L when this equilibrium is reached after several years of no stream flow recharging the system.

Based on the simulations, the planned TDS should include a safety factor for design and use a design value of 1200 mg/L to account for uncertainties. If the drought extends into 2017 with no stream flow, then the TDS values will increase, potentially resulting in decreased recovery efficiency from the treatment system.

6.5 Emergency Alternative Recommendation

Based on the modeling simulations emergency water supply Alternative 4 is feasible, though there is significant recirculation of the highly treated water. Alternative 3, with a modification to the location of the injection well further up-gradient is also feasible. However, this would require access to property not owned by CCSD.

A key element of this feasibility is the use of an injection well between the CCSD well field and the percolation ponds. Use of this approach allows maintenance of a gradient that protects the well field from impacts from the percolated effluent and brackish water present in the lower basin. Emergency water supply Alternative 4 increases sustainability of the water supply under the current drought conditions, since the previously lost percolated effluent is captured, highly treated, and produced for water supply after appropriate residence time in the aquifer. The brackish water that is pumped from the basin for treatment will be diluted with percolated secondary effluent and a portion of highly treated water that is injected will maintain a protective gradient between the percolation ponds and the potable water well field.

Use of the injection well to create a mound near the freshwater lagoon has limited benefits later in the season as basin water levels are drawn down below the channel invert, precluding discharge of the mounded groundwater to the lagoon. Mitigation would be more effective by discharging the treated water directly in the open channel.

6.7 Conclusions

The modeling analysis indicates that enhancing water supplies for both emergency and long-term conditions is feasible in the San Simeon Creek Basin.

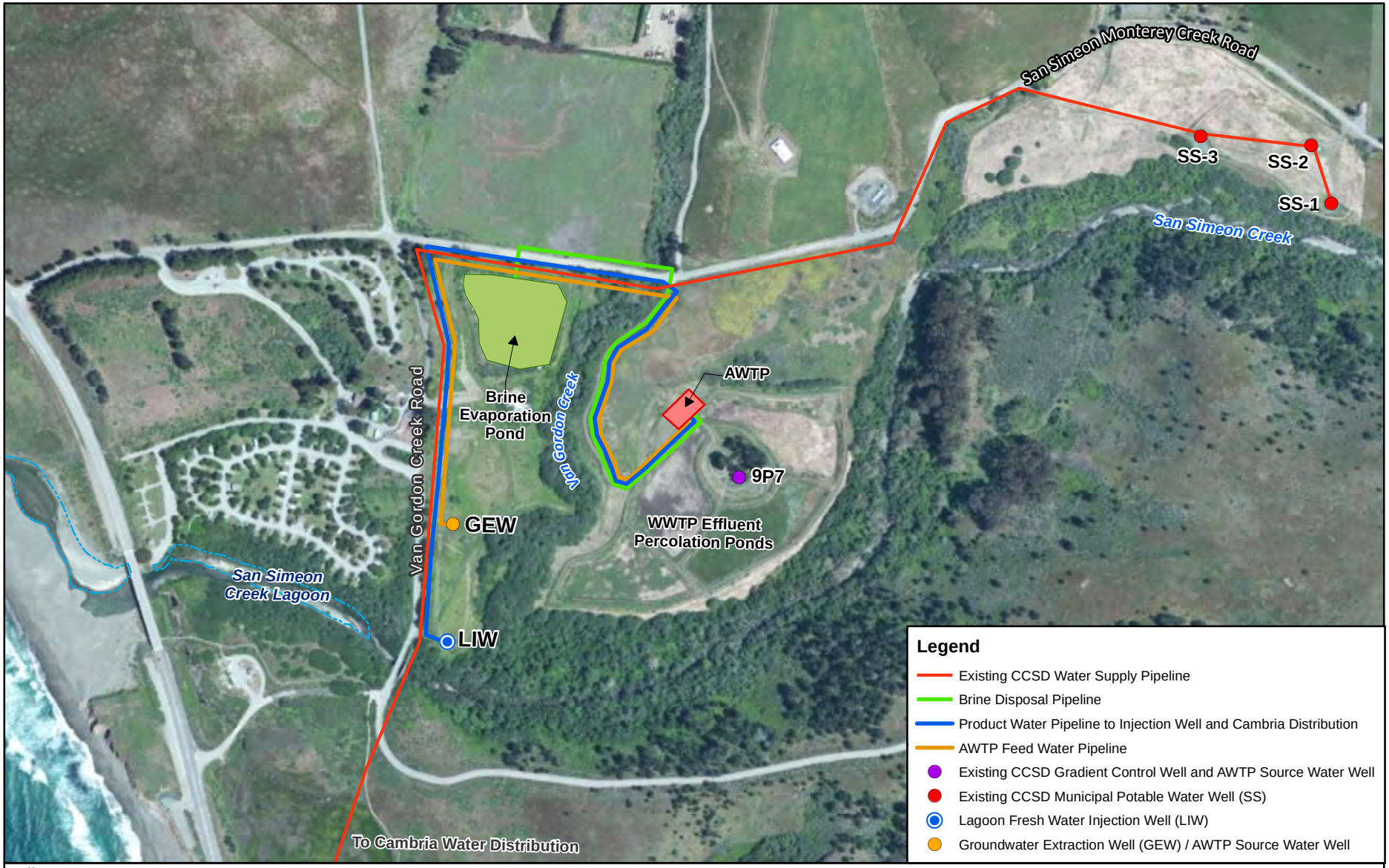

N

300 0 600
Feet

CDM Smith

Cambria Emergency Water Supply Project
TO1: Geo-Hydrological Model

Figure 6-1
Emergency Alternative 1 Summary

schellerka K:\51115_USACE-KansasCity\102849\Figure6-1_Alternative1.mxd 4/3/2014

This page intentionally left blank.

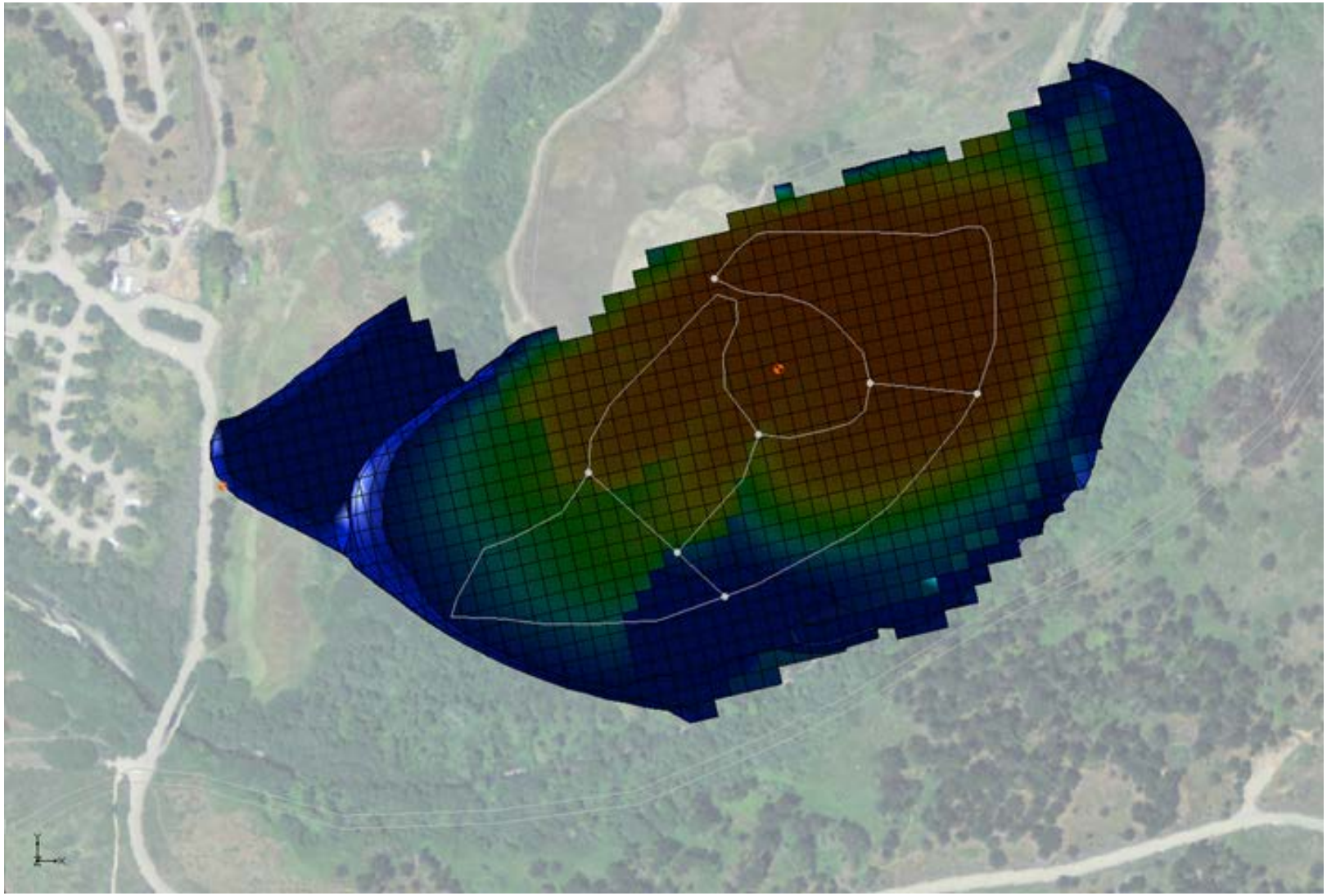

Cambria Emergency Water Supply Project
TO1: Geo-Hydrological Model

Figure 6-2

Alternative 1: Simulated Extent of Treated Wastewater after 270 days of operation Emergency

CDM Smith

ramirezjj C:\Users\ramirezjj\Documents\51115 USACE\102849 Cambria\Figure 1-1_Location of Study Area with Significant Site Features.mxd 3/28/2014

This page intentionally left blank.

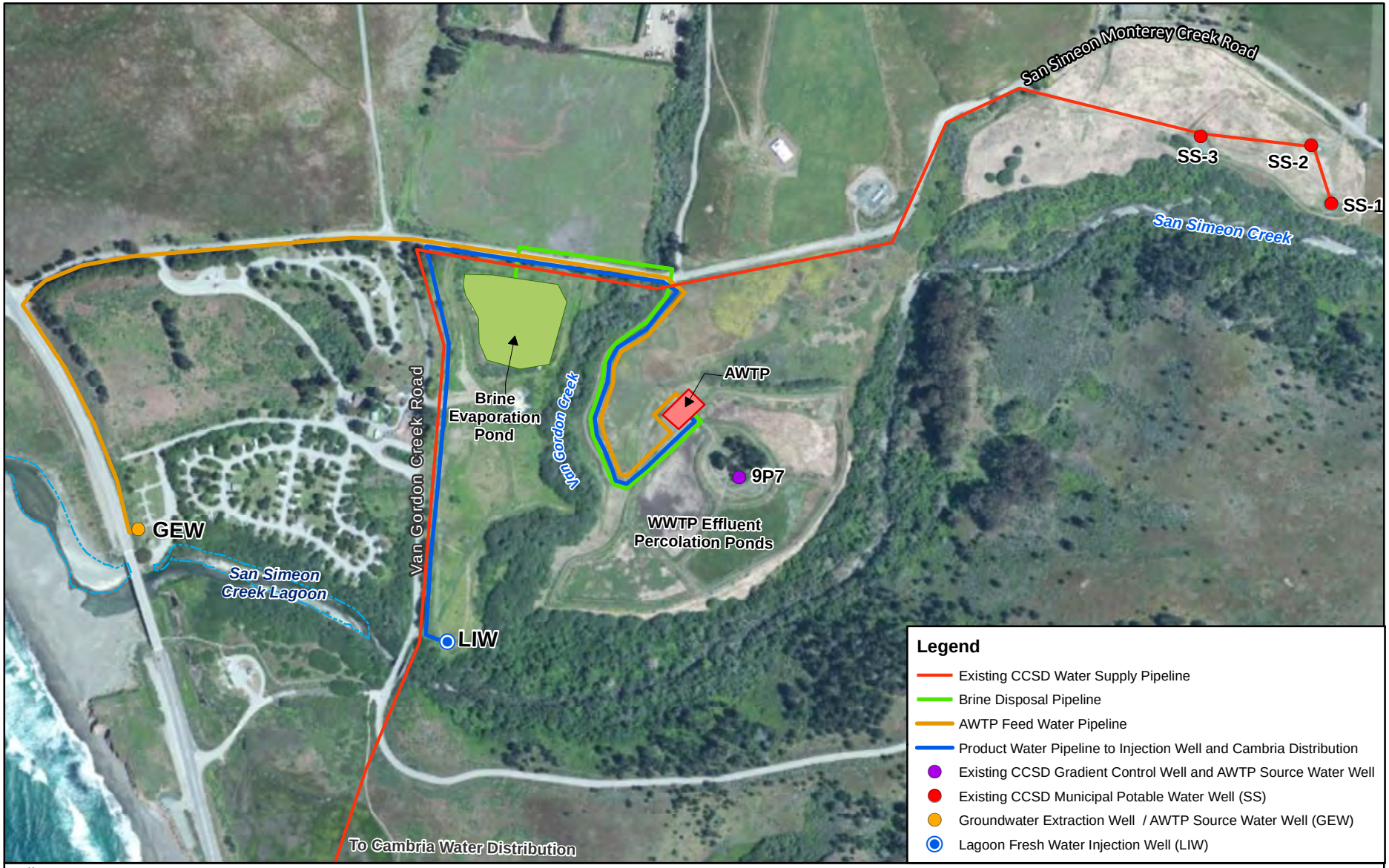

N

300 0 600
Feet

CDM Smith

Cambria Emergency Water Supply Project
TO1: Geo-Hydrological Model

Figure 6-3
Emergency Alternative 2 Summary

schellerka K:\51115_USACE-KansasCity\102849\Figure6-2_Alternative2.mxd 4/3/2014

This page intentionally left blank.

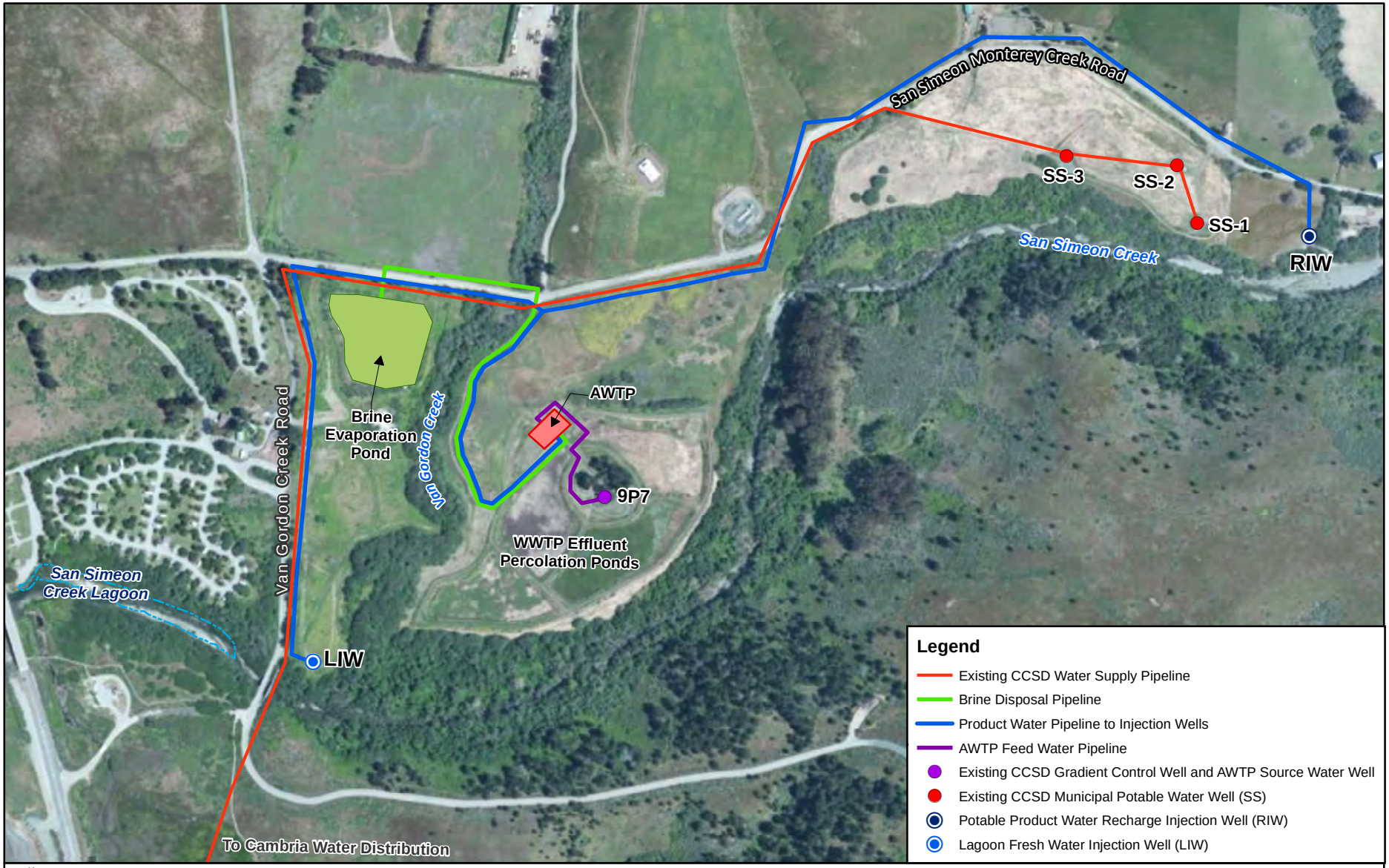

N

300 0 600
Feet

CDM Smith

Cambria Emergency Water Supply Project
TO1: Geo-Hydrological Model

Figure 6-4
Emergency Alternative 3 Summary

schellerka K:\51115_USACE-KansasCity\102849\Figure6-3_Alternative3.mxd 4/3/2014

This page intentionally left blank.

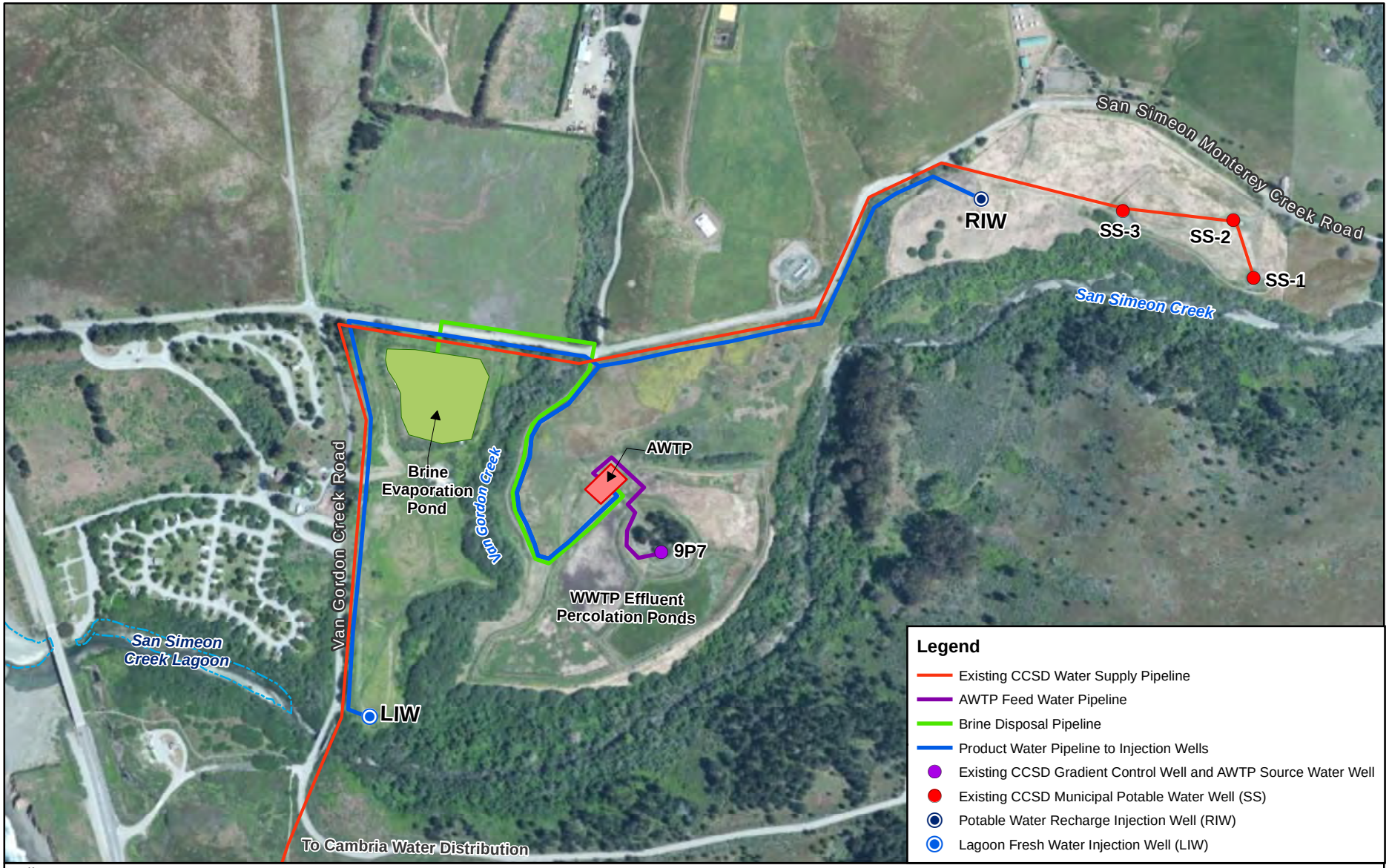

300 0 600
Feet

Cambria Emergency Water Supply Project
TO1: Geo-Hydrological Model

Figure 6-5
Emergency Alternative 4 Summary

CDM Smith

schellerka K:\51115_USACE-KansasCity\102849\Figure6-4_Alternative4.mxd 4/3/2014

This page intentionally left blank.

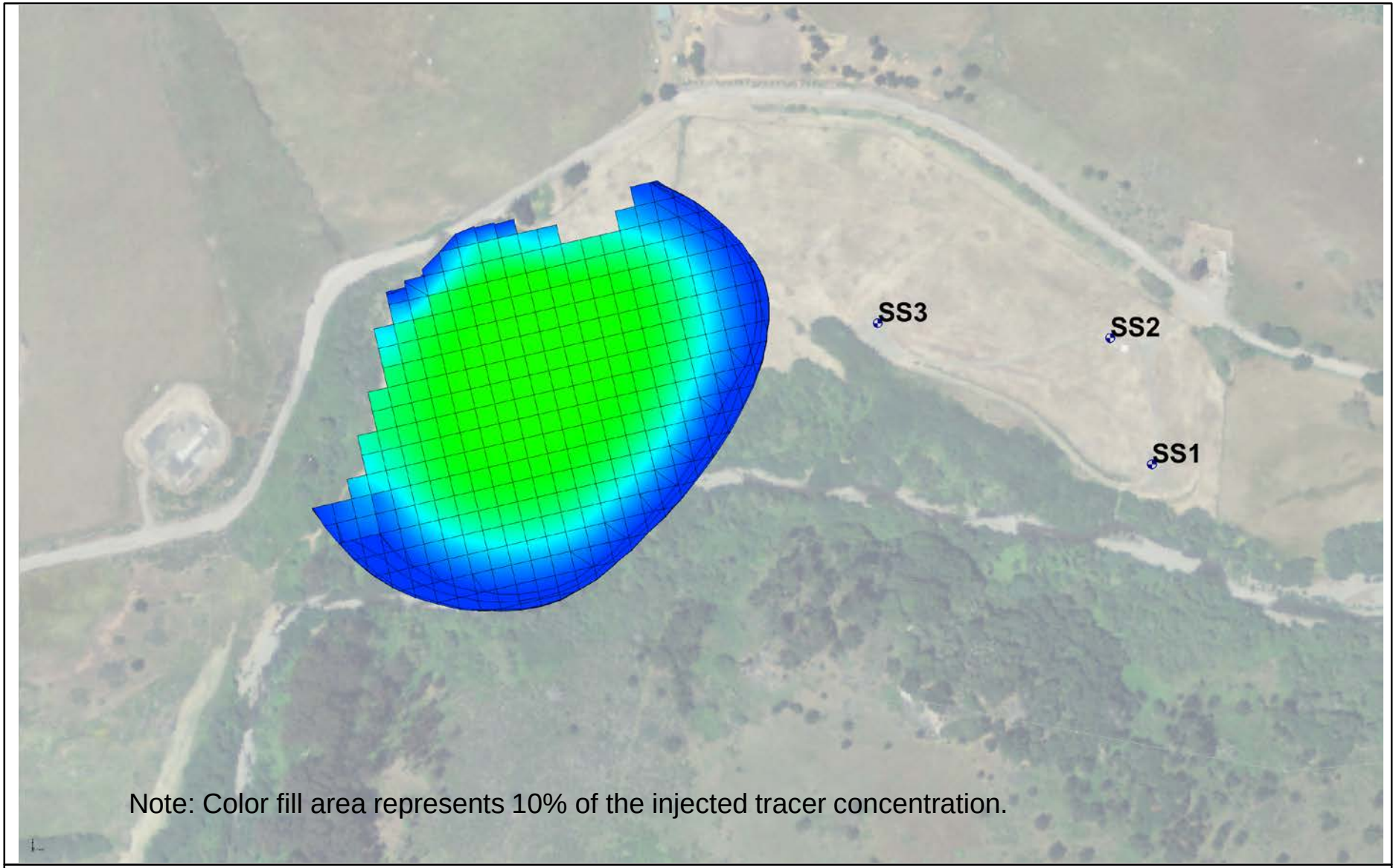

Cambria Emergency Water Supply Project
TO1: Geo-Hydrological Model

CDM Smith

Figure 6-6
Simulated Tracer Extent at 30 Days

ramirezjj C:\Users\ramirezjj\Documents\51115 USACE\102849 Cambria\Figure 1-1_Location of Study Area with Significant Site Features.mxd 3/28/2014

This page intentionally left blank.

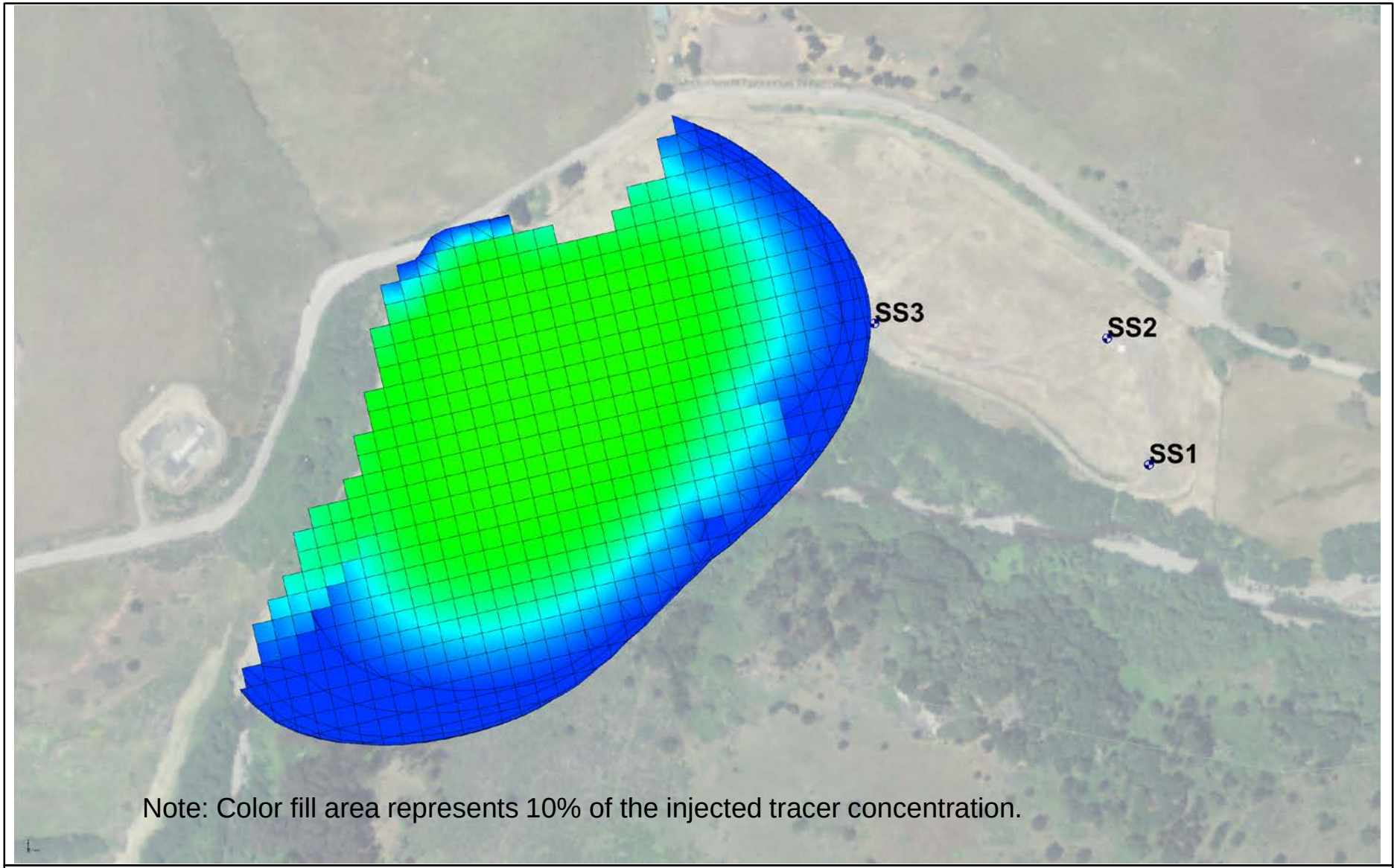

Cambria Emergency Water Supply Project
TO1: Geo-Hydrological Model

Figure 6-7
Simulated Tracer Extent at 60 Days

CDM Smith

ramirezjj C:\Users\ramirezjj\Documents\51115 USACE\102849 Cambria\Figure 1-1_Location of Study Area with Significant Site Features.mxd 3/28/2014

This page intentionally left blank.

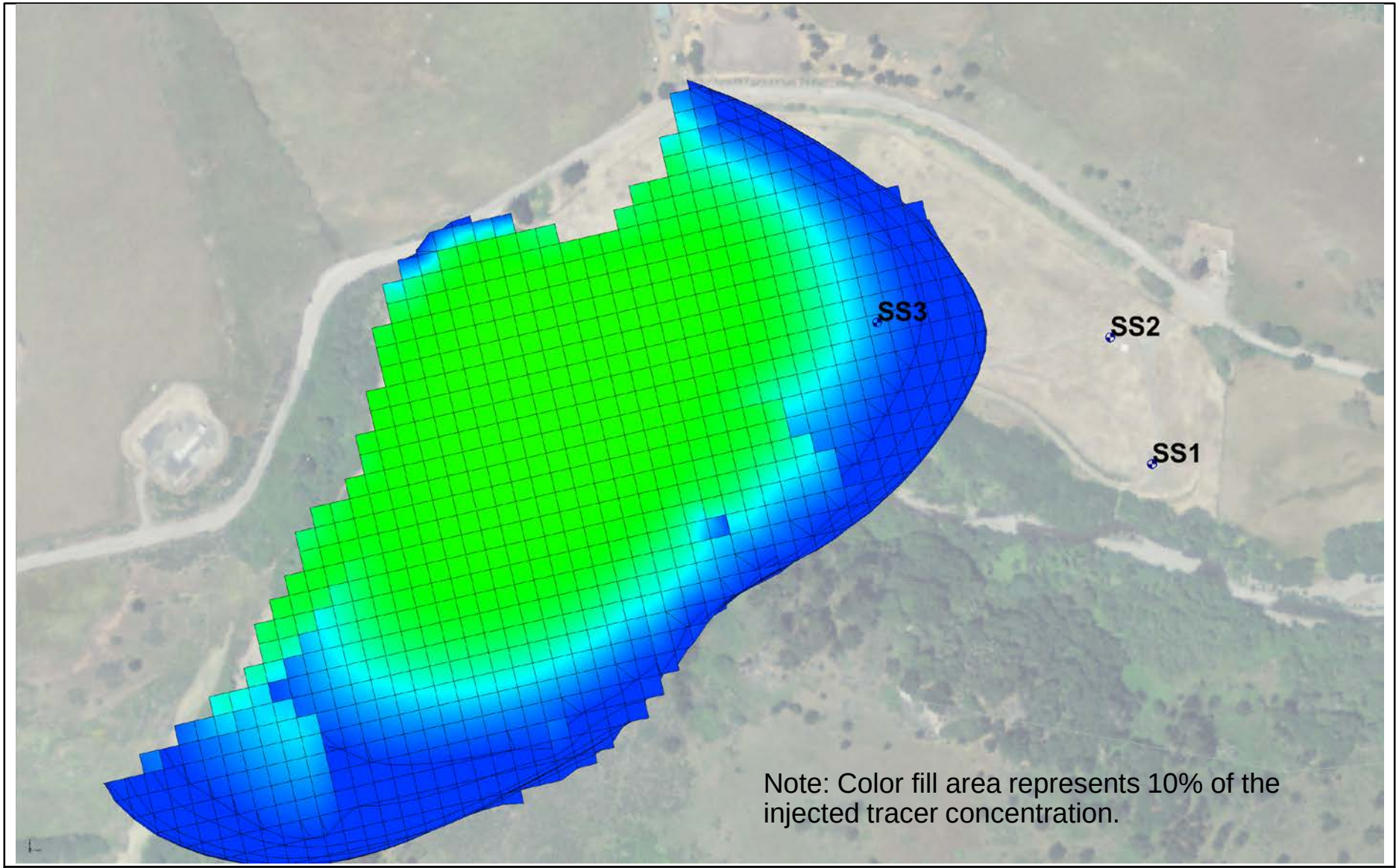

Cambria Emergency Water Supply Project
TO1: Geo-Hydrological Model

CDM Smith

Figure 6-8
Simulated Tracer Extent at 90 Days

ramirezjj C:\Users\ramirezjj\Documents\51115 USACE\102849 Cambria\Figure 1-1_Location of Study Area with Significant Site Features.mxd 3/28/2014

This page intentionally left blank.

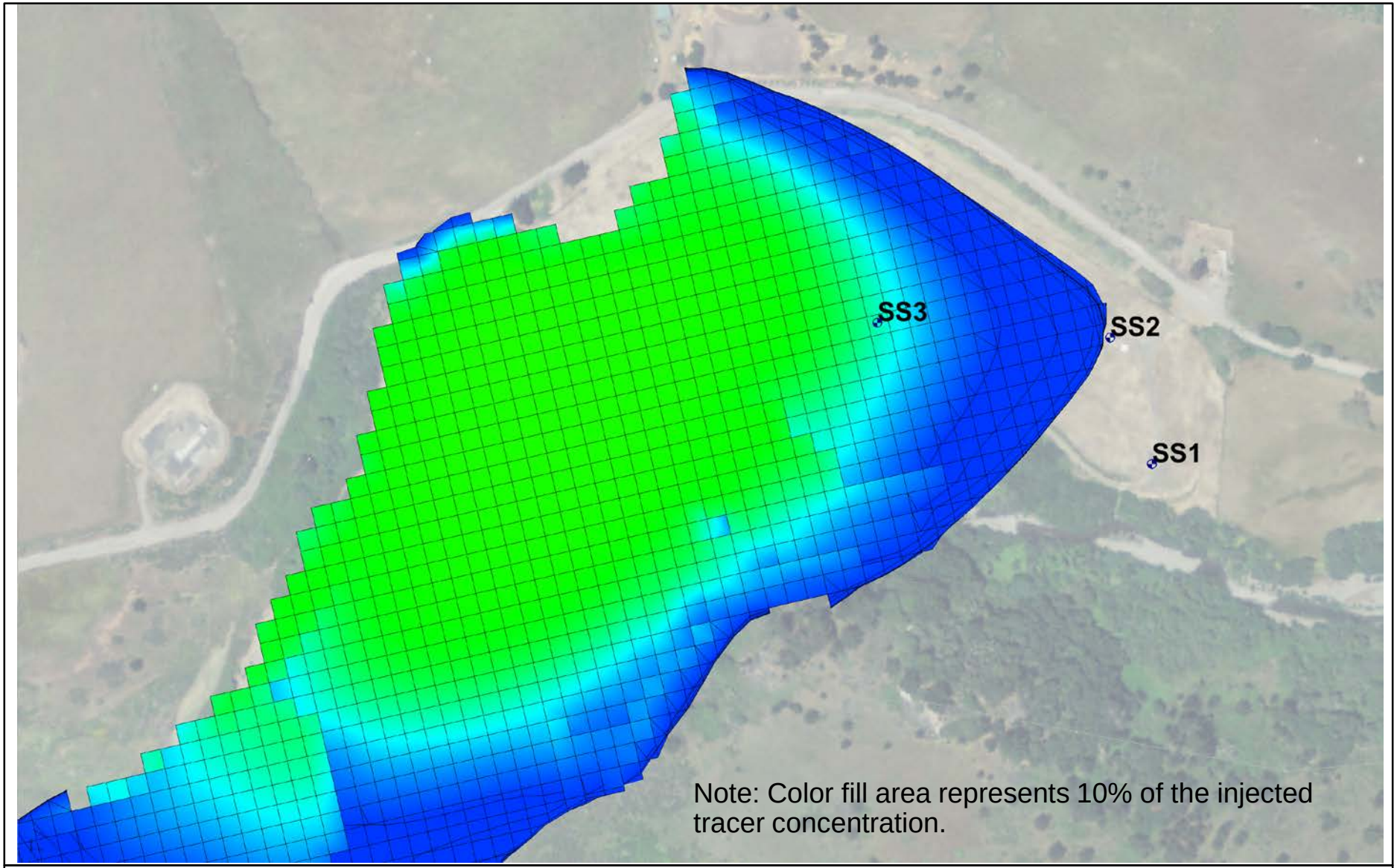

Cambria Emergency Water Supply Project
TO1: Geo-Hydrological Model

CDM Smith

Figure 6-9
Simulated Tracer Extent at 120 Days

ramirezjj C:\Users\ramirezjj\Documents\51115 USACE\102849 Cambria\Figure 1-1_Location of Study Area with Significant Site Features.mxd 3/28/2014

This page intentionally left blank.

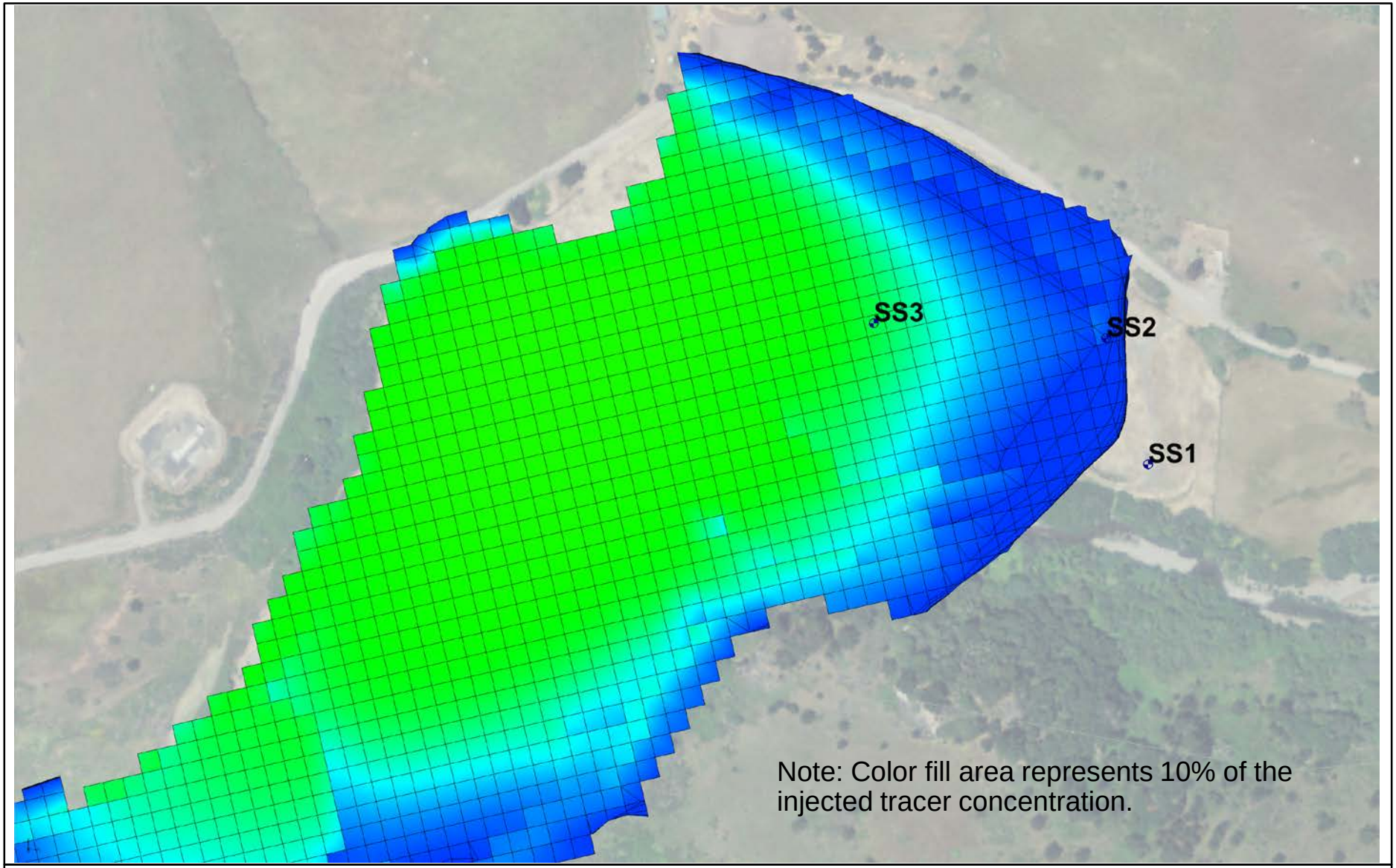

Cambria Emergency Water Supply Project

TO1: Geo-Hydrological Model

CDM Smith

Figure 6-10

Simulated Tracer Extent at 150 Days

ramirezjj C:\Users\ramirezjj\Documents\51115 USACE\102849 Cambria\Figure 1-1_Location of Study Area with Significant Site Features.mxd 3/28/2014

This page intentionally left blank.

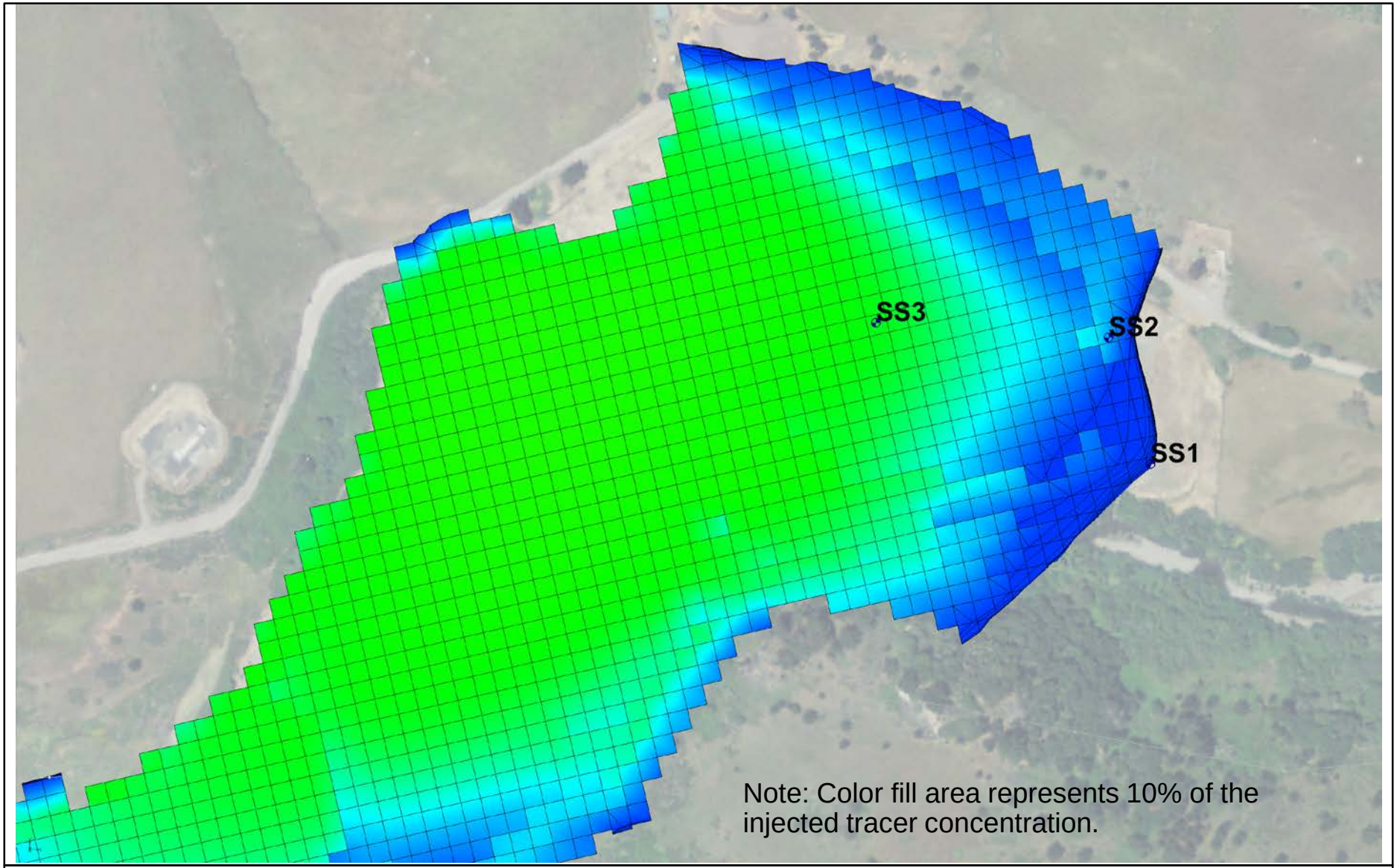

Cambria Emergency Water Supply Project
TO1: Geo-Hydrological Model

CDM Smith

Figure 6-11
Simulated Tracer Extent at 180 Days

ramirezjj C:\Users\ramirezjj\Documents\51115 USACE\102849 Cambria\Figure 1-1_Location of Study Area with Significant Site Features.mxd 3/28/2014

This page intentionally left blank.

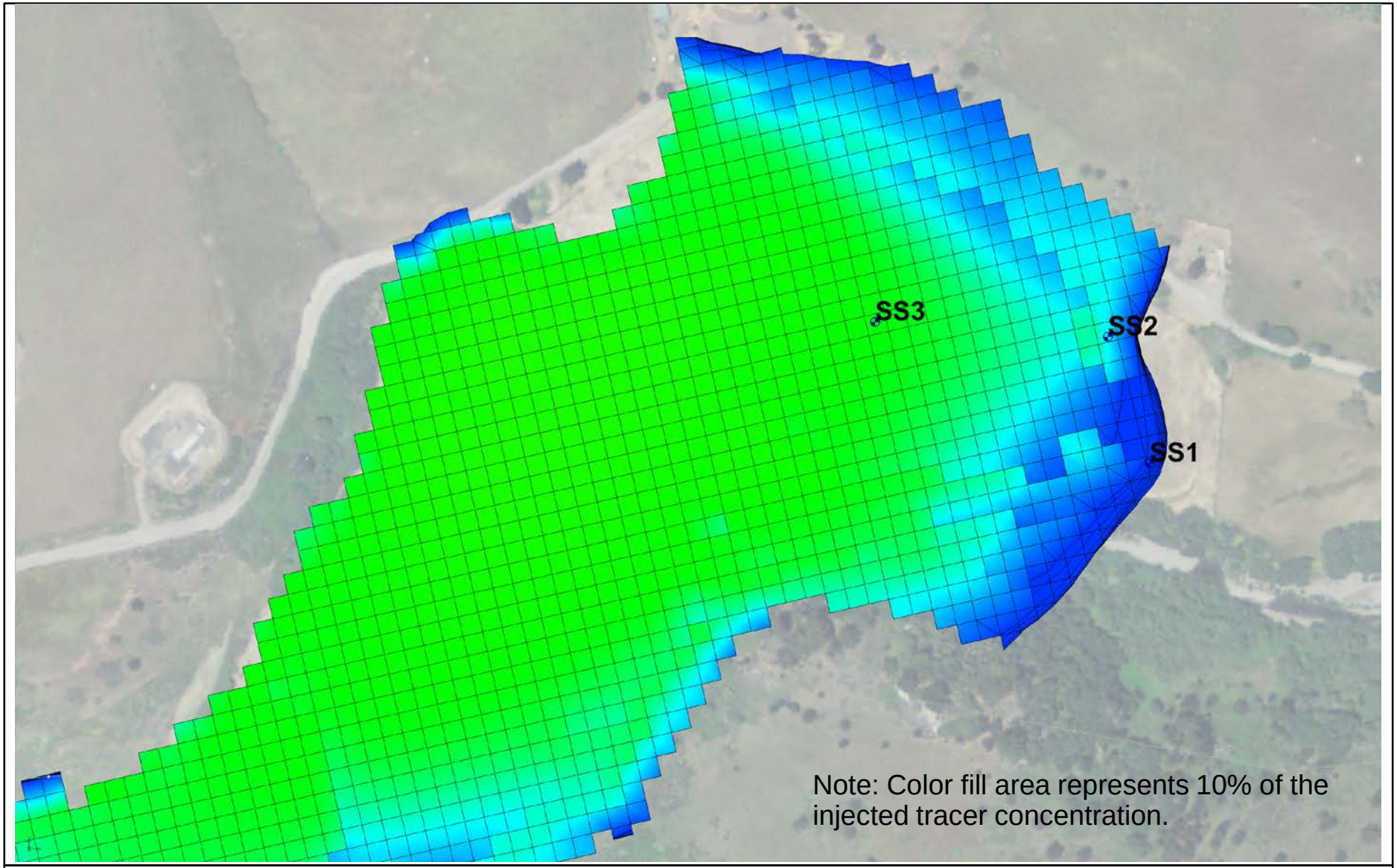

Cambria Emergency Water Supply Project
TO1: Geo-Hydrological Model

Figure 6-12
Simulated Tracer Extent at 210 Days

CDM Smith

ramirezjj C:\Users\ramirezjj\Documents\51115 USACE\102849 Cambria\Figure 1-1_Location of Study Area with Significant Site Features.mxd 3/28/2014

This page intentionally left blank.

Cambria Emergency Water Supply Project
TO1: Geo-Hydrological Model

Figure 6-13

Simulated Water Levels After One Year of Operation

CDM Smith

ramirezjj C:\Users\ramirezjj\Documents\51115 USACE\102849 Cambria\Figure 1-1_Location of Study Area with Significant Site Features.mxd 3/28/2014

This page intentionally left blank.

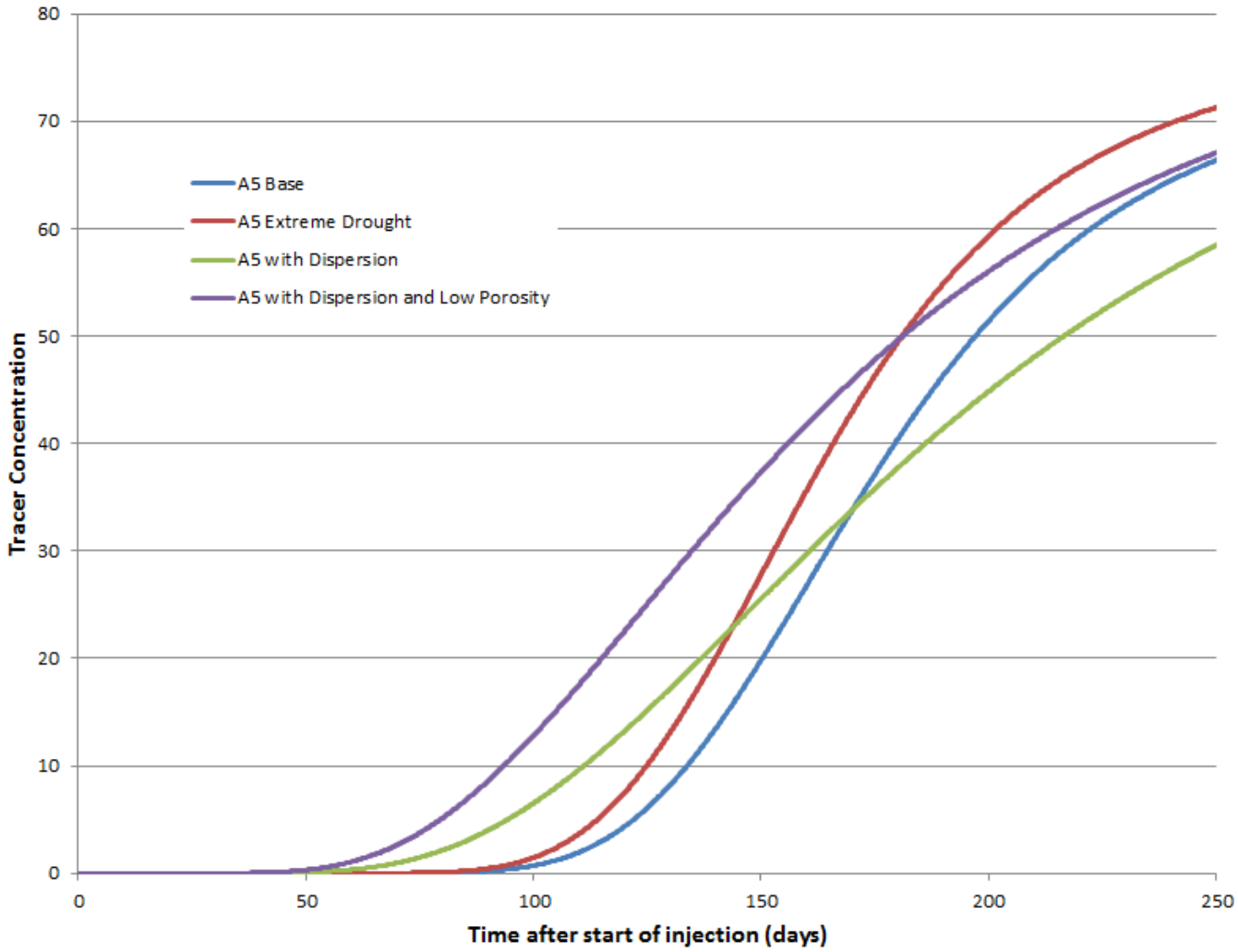

Cambria Emergency Water Supply Project

TO1: Geo-Hydrological Model

Figure 6-14

Simulated Tracer Breakthrough at wells SS1 and SS2

CDM Smith

ramirezjj C:\Users\ramirezjj\Documents\51115 USACE\102849 Cambria\Figure 1-1_Location of Study Area with Significant Site Features.mxd 3/28/2014

This page intentionally left blank.

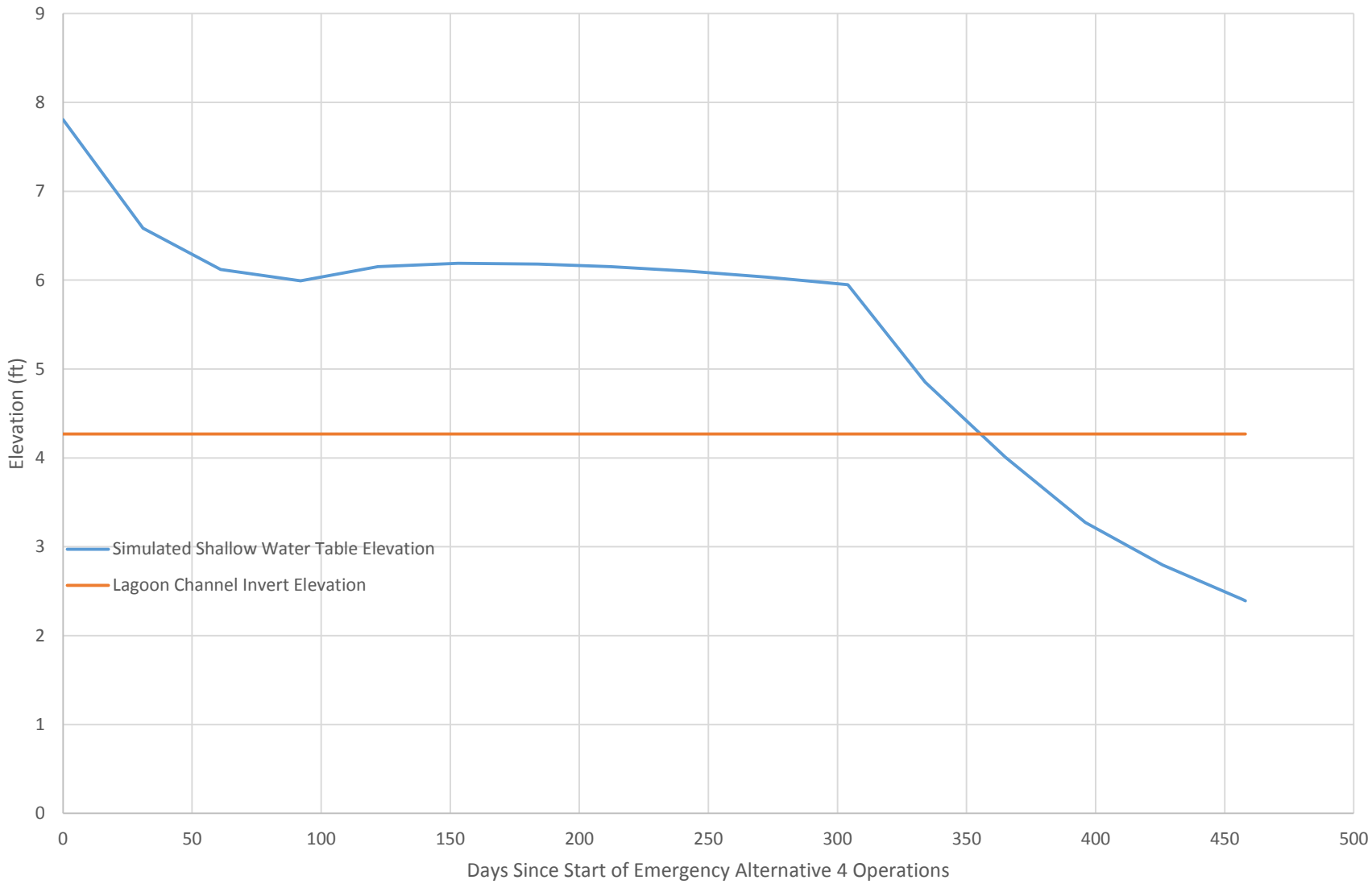

Cambria Emergency Water Supply Project

TO1: Geo-Hydrological Model

Figure 6-1p

Simulated {KI·ff2ø ² I·ûŜℕ ¢I·ōfŜ !Řƻ I·ŏŜyŭ ŭ2 CMŜăK ² I·ûŜℕ [I·∃22y˜

CDM Smith

This page intentionally left blank.

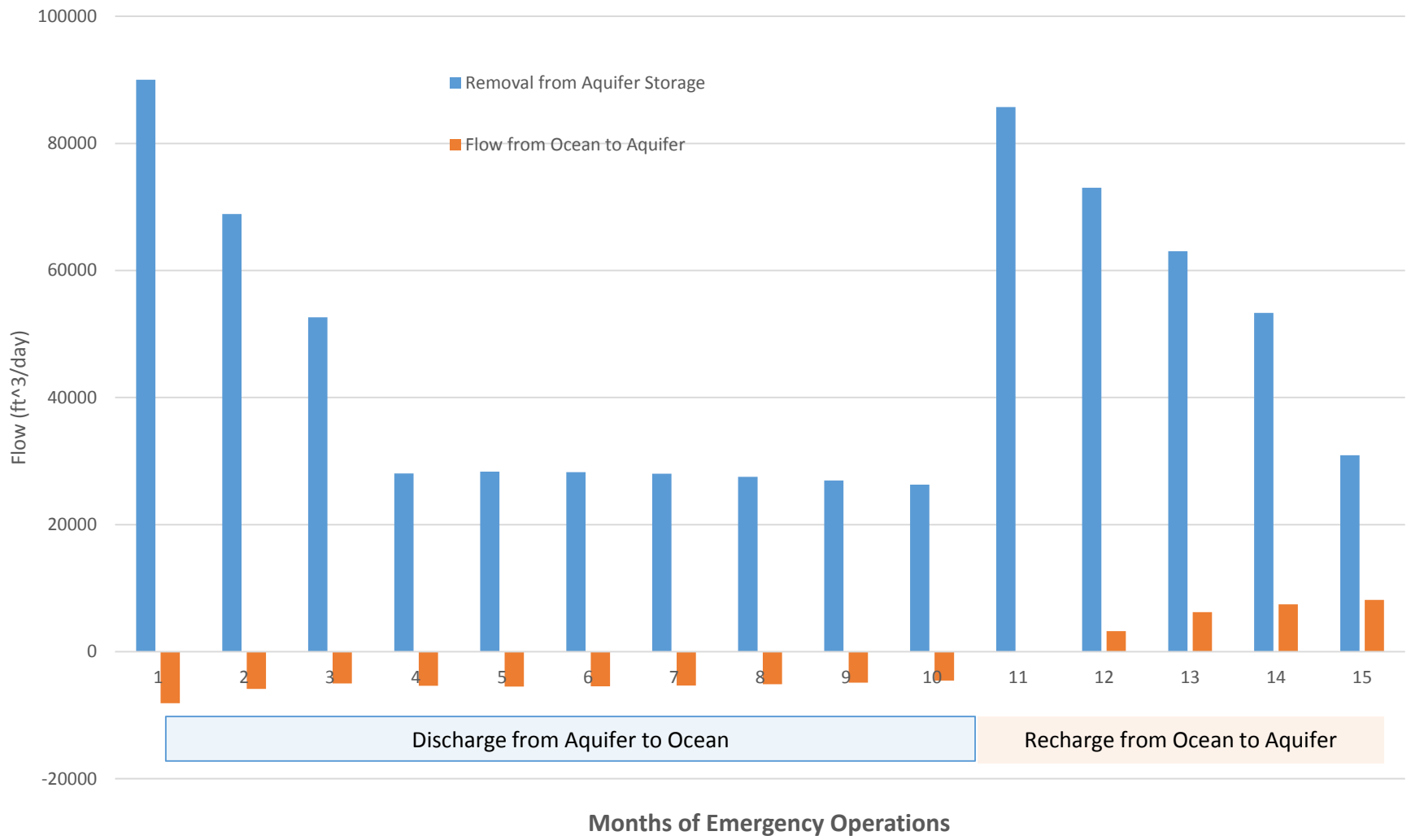

Cambria Emergency Water Supply Project

TO1: Geo-Hydrological Model

CDM Smith

Figure 6-16

Simulated Basin Storage Depletion and Ocean Inflows and Outflows

This page intentionally left blank.

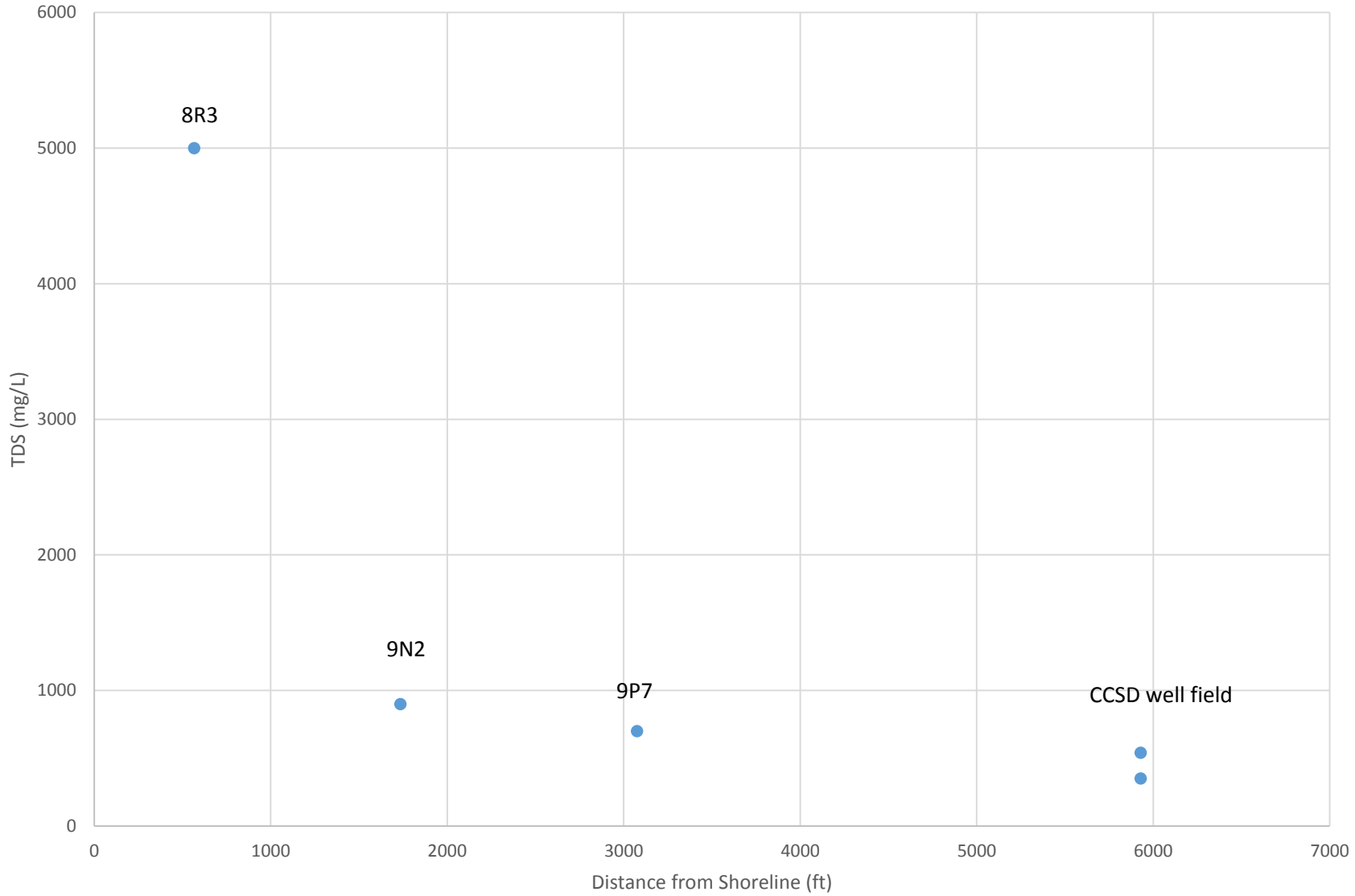

Cambria Emergency Water Supply Project
TO1: Geo-Hydrological Model

CDM Smith

Figure 6-1T
TDS Profile from Well Samples

This page intentionally left blank.

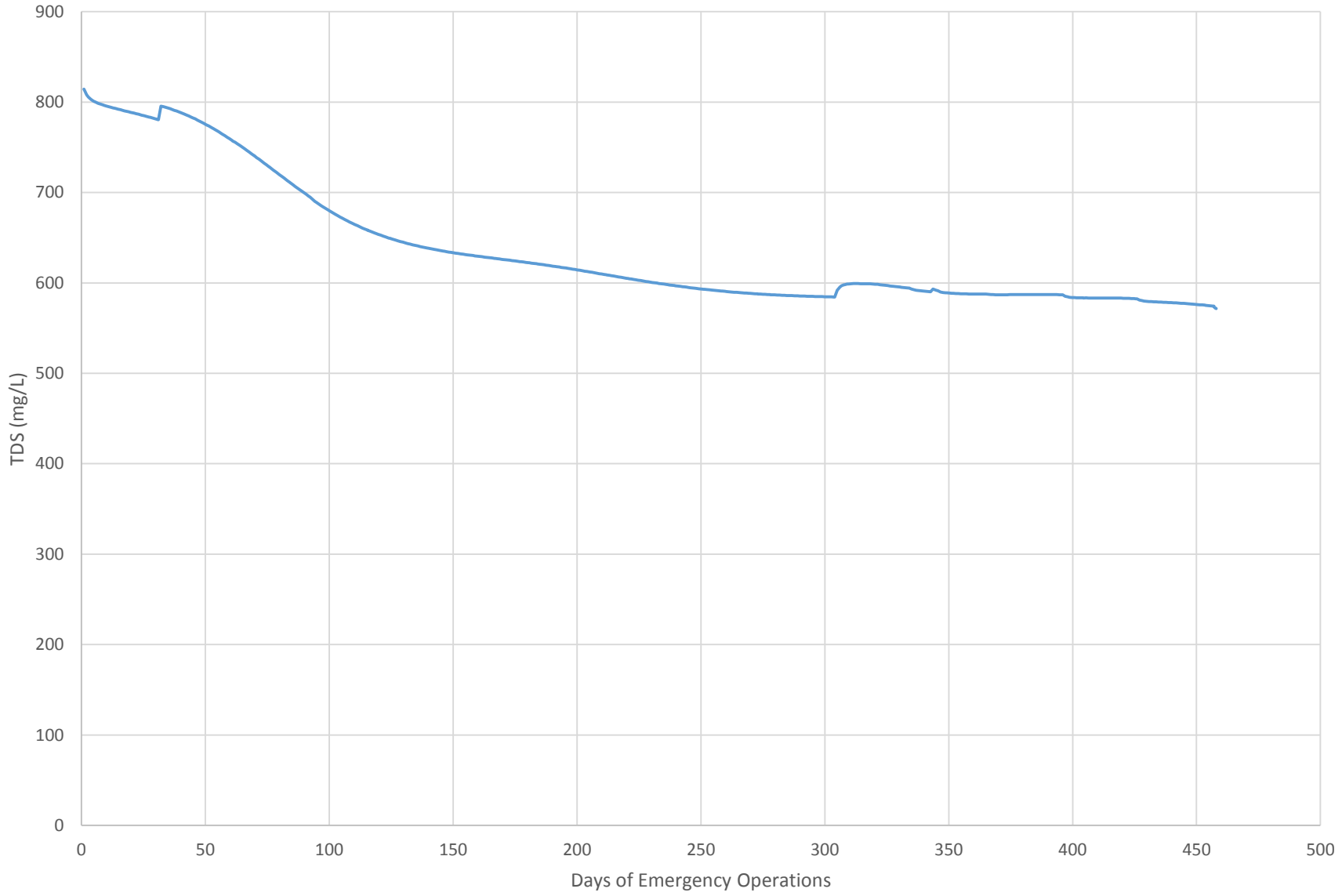

Cambria Emergency Water Supply Project
TO1: Geo-Hydrological Model

CDM Smith

Figure 6-18
Simulated TDS at Brackish Extraction Well

This page intentionally left blank.

Section 7
References

Hall, C. A., Jr.; Ernst, W. G.; Prior, S. W.; Wiese, J. W., 1979, *Geologic map of the San Luis Obispo-San Simeon Region*, *California,* US Geological Survey, Miscellaneous Investigations Series Map I-1097.

Harbaugh, Arlen W.; Banta, Edward R.; Hill, Mary C.; McDonald, Michael G., *2000 MODFLOW-2000 The U.S. Geological Survey Modular Ground-Water Model - User Guide to Modularization Concepts and the Ground-Water Flow Process*, USGS Open-File Report: 2000-92.

Langevin, C.D., Shoemaker, W.B., and Guo, Weixing, 2003, *MODFLOW-2000, the U.S. Geological Survey Modular Ground-Water Model–Documentation of the SEAWAT-2000 Version with the Variable-Density Flow Process (VDF) and the Integrated MT3DMS Transport Process (IMT):* U.S. Geological Survey Open-File Report 03-426, 43 p.

Yates, Eugene B.; Van Konyenburg, Kathryn M., 1998, *Hydrogeology, Water Quality, Water Budgets, and Simulated Responses to Hydrologic Changes in Santa Rosa and San Simeon Creek Ground-Water Basins, San Luis Obispo County, California*, U S Geological Survey, Water Resources Investigations Report 98-4061.

Yates, Eugene B., 2007, *Water Master Plan EIR: Draft Description of Groundwater Model and Simulation Results,* unpublished technical memorandum from Gus Yates to Bob Gresens, May 26, 2007.

Zheng, Chunmiao, and P. Patrick Wang, 1999, *MT3DMS, A Modular Three-Dimensional Multi-Species Transport Model for Simulation of Advection, Dispersion and Chemical Reactions of Contaminants in Groundwater Systems;* documentation and user's guide, U.S. Army Engineer Research and Development Center Contract Report SERDP-99-1, Vicksburg, MS, 202 p.

This page intentionally left blank.

APPENDIX 3-3E – SUBMITTED MITIGATED NEGATIVE DECLARATION

PUBLIC REVIEW DRAFT | JUNE 2014

Cambria Emergency Water Supply Project

INITIAL STUDY/ MITIGATED NEGATIVE DECLARATION

PREPARED FOR:

Cambria Community Services District

PREPARED BY:

RBF Consulting

A Company of Michael Baker International

PUBLIC REVIEW DRAFT
INITIAL STUDY/MITIGATED NEGATIVE DECLARATION

CAMBRIA EMERGENCY WATER SUPPLY PROJECT

Lead Agency:

CAMBRIA COMMUNITY SERVICES DISTRICT
1316 Tamson Drive, Suite 201
Cambria, California 93428
Contact: Mr. Robert C. Gresens, P.E.
805.927.6223

Prepared by:

RBF CONSULTING,
A COMPANY OF MICHAEL BAKER INTERNATIONAL
14725 Alton Parkway
Irvine, California 92618-2069
Contacts: Mr. Glenn Lajoie, AICP
Ms. Rita Garcia
949.472.3505

June 20, 2014

JN 141290

This document is designed for double-sided printing to conserve natural resources.

TABLE OF CONTENTS

1.0 Introduction 1-1

1.1 Statutory Authority and Requirements 1-1
1.2 CEQA Document Tiering 1-2
1.3 Purpose 1-3
1.4 Incorporation by Reference 1-4

2.0 Project Description 2-1

2.1 Project Location 2-1
2.2 Background and History 2-1
2.3 Environmental Setting 2-5
2.4 County of San Luis Obispo General Plan Land Use and Combining Designations 2-8
2.5 Project Characteristics 2-10
2.6 Project Construction and Phasing 2-22
2.7 Project Approvals 2-24

3.0 Initial Study Checklist 3-1

3.1 Background 3-1
3.2 Environmental Factors Potentially Affected 3-2

4.0 Environmental Analysis 4-1

4.1 Aesthetics 4.1-1
4.2 Agriculture and Forestry Resources 4.2-1
4.3 Air Quality 4.3-1
4.4 Biological Resources 4.4-1
4.5 Cultural Resources 4.5-1
4.6 Geology and Soils 4.6-1
4.7 Greenhouse Gases 4.7-1
4.8 Hazards and Hazardous Materials 4.8-1
4.9 Hydrology and Water Quality 4.9-1
4.10 Land Use and Planning 4.10-1
4.11 Mineral Resources 4.11-1
4.12 Noise 4.12-1
4.13 Population and Housing 4.13-1
4.14 Public Services 4.14-1
4.15 Recreation 4.15-1
4.16 Transportation/Traffic 4.16-1
4.17 Utilities and Service Systems 4.17-1
4.18 Mandatory Findings of Significance 4.18-1

5.0 References 5-1

6.0 Report Preparation Personnel 6-1

7.0 Inventory of Existing Regulations and Project Mitigation Measures 7-1

7.1 Local Coastal Program Policies 7-1
7.2 North Coast Area Plan Standards 7-8
7.3 Coastal Zone Land Use Ordinance Standards 7-9
7.4 San Luis Obispo County Building and Construction Ordinance 7-19
7.5 San Luis Obispo Air Pollution Control District Standards 7-19
7.6 Project Mitigation Measures 7-20

8.0 Consultant Recommendation 8-1

9.0 Lead Agency Determination 9-1

10.0 Mitigation Monitoring and Reporting Program (in Final IS/MND) 10-1

APPENDICES (provided on CD following the Table of Contents)

A. Air Quality/Greenhouse Gas Analysis Data
B. Biological Resources Assessment
C. Cultural Resources Assessment
D. Groundwater Modeling Report

LIST OF EXHIBITS

Exhibit 2-1 Regional Context 2-2
Exhibit 2-2 Local Context 2-3
Exhibit 2-3 Existing Site Conditions 2-6
Exhibit 2-4 Existing Well 9P7 2-7
Exhibit 2-5 AWTP Site 2-9
Exhibit 2-6 Project Overview 2-11
Exhibit 2-7 AWTP Process Flow Diagram 2-13
Exhibit 2-8 AWTP Site Layout 2-14
Exhibit 2-9 Brine Pond Plan 2-17
Exhibit 2-10 Spray Evaporator 2-19
Exhibit 2-11 Conveyance Piping Plan 2-21
Exhibit 2-12 Construction Laydown/Staging Areas 2-23
Exhibit 4.4-1 Project Site Map 4.4-2
Exhibit 4.4-2 Vegetation Map 4.4-4
Exhibit 4.4-3 Critical Habitat and Essential Fish Habitat 4.4-10
Exhibit 4.4-4 Environmentally Sensitive Habitat 4.4-22
Exhibit 4.9-1 FEMA 100-year Flood Zones 4.9-11

LIST OF TABLES

Table 2-1 Membrane Filtration Water Quality Goals....2-15

Table 2-2 Conveyance Pipeline Schedule....2-20

Table 4.3-1 Construction Air Emissions Thresholds....4.3-2

Table 4.3-2 Operational Air Emissions Thresholds....4.3-2

Table 4.3-3 Construction Air Emissions....4.3-4

Table 4.5-1 Previous Studies Within a 0.5-Mile Radius of the Project....4.5-2

Table 4.5-2 Archaeological and Historic Resources Within a 0.5-Mile Radius of the Project....4.5-3

Table 4.7-1 Estimated Greenhouse Gas Emissions....4.7-3

Table 4.12-1 Maximum Noise Levels Generated by Construction Equipment....4.12-3

Table 4.12-2 Exterior Noise Level Standards....4.12-5

Table 4.12-3 Typical Vibration Levels for Construction Equipment....4.12-6

Table 4.12-4 CZLUO Vibration Standards....4.12-7

INITIAL STUDY, MITIGATED NEGATIVE DECLARATION AND TECHNICAL APPENDICES ON CD

This page intentionally left blank.

1.0 INTRODUCTION

The Cambria Community Services District (CCSD) is proposing the Cambria Emergency Water Supply Project (Project), in response to the CCSD Board of Directors' January 30, 2014 declaration of a Stage 3 Water Shortage Emergency in Cambria.[1] The Project involves construction and operation of emergency water facilities at the CCSD's existing San Simeon well field and percolation pond system property, located at 990 San Simeon - Monterey Creek Road. The Project proposes to construct and operate: one extraction well (existing Well 9P7); an Advanced Water Treatment Plant (AWTP); an injection well (RIW) to the groundwater basin at San Simeon well field; an evaporation pond (rehabilitate/modify an existing storage pond); three injection wells (LIWs), which would serve as mitigation to protect San Simeon Creek and downstream lagoon; and four monitoring wells. As an option to the three LIWs, the existing Well 9P7 discharge pipeline and discharge structure may be utilized to discharge directly into Van Gordon Creek adjacent to the AWTP. The emergency Project is needed to treat brackish water and fully recharge the San Simeon Creek coastal stream aquifers with advance treated water. The brackish water contains a combination of creek underflow, percolated wastewater treatment plant effluent, and a mixture of freshwater with saltwater that has migrated inland within an underground saltwater wedge. The Project is proposed to avoid projected water supply shortages anticipated by the end of summer/early fall 2014. Project benefits would include: preventing the migration of secondary wastewater effluent into the San Simeon well field production wells; preventing seawater from intruding into the CCSD's San Simeon well field production wells; avoiding possible ground subsidence; and maintaining adequate groundwater levels at the San Simeon well field to ensure the production wells operate properly (do not loose suction). To support the Project's regular Coastal Development Permit, the CCSD has determined that the Project is subject to the requirements of the California Environmental Quality Act (CEQA). This Initial Study/Mitigated Negative Declaration (IS/MND) addresses the direct, indirect, and cumulative environmental effects associated with the Cambria Emergency Water Supply Project, as proposed.

1.1 STATUTORY AUTHORITY AND REQUIREMENTS

In accordance with CEQA (Public Resources Code Section 21000-21177) and pursuant to Section 15063 of Title 14 of the California Code of Regulations (CCR), the CCSD, acting in the capacity of Lead Agency, is required to undertake the preparation of an Initial Study to determine if a proposed project would have a significant environmental impact. If the Lead Agency finds that there is no evidence that a project, either as proposed or as modified to include the mitigation measures identified in the Initial Study, may cause a significant effect on the environment, the Lead Agency shall prepare a Negative Declaration (or Mitigated Negative Declaration) for the project. Such determination can be made only if "there is no substantial evidence in light of the whole record before the Lead Agency" that such impacts may occur (Section 21080(c), Public Resources Code).

The environmental documentation, which is ultimately approved and/or certified by the CCSD in accordance with CEQA, is intended as an informational document undertaken to provide an environmental basis for subsequent discretionary actions upon the proposed Project. The resulting documentation is not; however, a policy document, and its approval and/or certification neither presupposes nor mandates any actions on the part of those agencies and its approval and/or certification neither presupposes nor mandates from whom permits and other discretionary approvals would be required.

[1] Governor Jerry Brown declared a drought emergency for the State of California in January 2014 and the San Luis Obispo County Board of Supervisors declared a local drought emergency for the County on March 11, 2014.

1.2 CEQA DOCUMENT TIERING

The Public Resources Code and the CEQA Guidelines discuss the use of "tiering" environmental impact reports by lead agencies. Public Resources Code Section 21068.5 defines "tiering" as:

> *The coverage of general matters and environmental effects in an environmental impact report prepared for a policy, plan, program or ordinance followed by narrower or site-specific environmental impact reports which incorporate by reference the discussion in any prior environmental impact report and which concentrate on the environmental effects which: (a) are capable of being mitigated, or (b) were not analyzed as significant effects on the environment in the prior environmental impact report.*

Tiering is further discussed in Public Resources Code Section 21094, as follows:

(a) Where a prior environmental impact report has been prepared and certified for a program, plan, policy, or ordinance, the lead agency for a later project that meets the requirements of this section shall examine significant effects of the later project upon the environment by using a tiered environmental impact report, except that the report on the later project is not required to examine those effects that the lead agency determines were either of the following:

(1) Mitigated or avoided pursuant to paragraph (1) of subdivision (a) of Section 21081 as a result of the prior environmental impact report.

(2) Examined at a sufficient level of detail in the prior environmental impact report to enable those effects to be mitigated or avoided by site-specific revisions, the imposition of conditions, or by other means in connection with the approval of the later project.

(b) This section applies only to a later project that the lead agency determines is all of the following:

(1) Consistent with the program, plan, policy, or ordinance for which an environmental impact report has been prepared and certified.

(2) Consistent with applicable local land use plans and zoning of the city, county, or city and county in which the later project would be located.

(3) Not subject to Section 21166.

(c) For purposes of compliance with this section, an initial study shall be prepared to assist the lead agency in making the determinations required by this section. The initial study shall analyze whether the later project may cause significant effects on the environment that were not examined in the prior environmental impact report.

(d) All public agencies that propose to carry out or approve the later project may utilize the prior environmental impact report and the environmental impact report on the later project to fulfill the requirements of Section 21081.

(e) When tiering is used pursuant to this section, an environmental impact report prepared for a later project shall refer to the prior environmental impact report and state where a copy of the prior environmental impact report may be examined.

Tiering is a method to streamline EIR preparation by allowing a Lead Agency to focus on the issues that are ripe for decision and exclude from consideration issues already decided or not yet ready for decisions (CEQA Guidelines Section 15152 and 15385). According to CEQA Guidelines Section 15152 (a), "tiering" is defined as:

> *Tiering refers to using the analysis of general matters contained in a broader EIR (such as one prepared for a general plan or policy statement) with later EIRs and negative declarations on narrower projects; incorporating by reference the general discussions from the broader EIR; and concentrating the later EIR or negative declaration solely on the issues specific to the later project.*

According to CEQA Guidelines Section 15385: "Tiering is appropriate when the sequence of EIRs is (a) from a general plan, policy, or program EIR to a program, plan, or policy EIR of a lesser scope or to a site-specific EIR . . . ."

The concept of tiering anticipates a multi-tiered approach to preparing EIRs. The first-tier EIR covers general issues in a broader program-oriented analysis, including important program resource and mitigation commitments required to be implemented at the project-level. Subsequent tiers incorporate by reference the general discussions from the broader document, concentrating on the issues specific to the proposed action being evaluated (CEQA Guidelines Section 15152).

When an EIR has been prepared and certified for a program or plan consistent with CEQA requirements, a Lead Agency, should, for a later project pursuant to or consistent with the program or plan, concentrate on the environmental effects that were not examined as significant effects on the environment in the prior EIR; refer to Public Resources Code Section 21068.5. In those situations where a programmatic document does not specifically address and analyze the impacts and mitigation measures necessary for a project-level action, the project-level environmental review can be streamlined by tiering from the program-level documents. Agencies are encouraged to tier their CEQA analysis to avoid repetition of issues and to focus on the issues for decision at each level of review. Subsequent CEQA compliance involves either the preparation of a further EIR (subsequent or supplemental) or a Negative Declaration.

Pursuant to CEQA Guidelines Section 15152, for purposes of tiering, significant environmental effects have been "adequately addressed" if the Lead Agency determines that the significant environmental effects:

- Have been mitigated or avoided as a result of the prior EIR and adopted findings in connection with that prior EIR; or

- Have been examined at a sufficient level of detail in the prior EIR to enable those effects to be mitigated or avoided by site-specific revisions, the imposition of conditions, or by other means with the approval of the later project.

Where appropriate, this Initial Study tiers off the earlier environmental documentation, as presented in Section 1.4 below. As discussed above, under CEQA Guidelines Section 15152, tiering is appropriate when the sequence of analysis follows from an EIR prepared for a general plan, policy, or program to an EIR of lesser scope, or to a site-specific EIR. Under CEQA, the earlier environmental documentation is considered a first tier and this Initial Study for the proposed Project is considered a second tier. This Initial Study will discuss any changed circumstances or new information that might alter the first tier analysis.

1.3 PURPOSE

Section 15063 of the *CEQA Guidelines* identifies specific disclosure requirements for inclusion in an Initial Study. Pursuant to those requirements, an Initial Study shall include:

- A description of the project, including the location of the project;
- Identification of the environmental setting;

- Identification of environmental effects by use of a checklist, matrix or other method, provided that entries on
- a checklist or other form are briefly explained to indicate that there is some evidence to support the entries;
- Discussion of ways to mitigate significant effects identified, if any;
- Examination of whether the project is compatible with existing zoning, plans, and other applicable land use controls; and
- The name(s) of the person(s) who prepared or participated in the preparation of the Initial Study.

1.4 INCORPORATION BY REFERENCE

Pertinent documents relating to this IS/MND have been cited and incorporated by reference, in accordance with CEQA Guidelines, Sections 15148 and 15150, to eliminate the need for inclusion of voluminous engineering and technical reports within the Initial Study. Of particular relevance are previous environmental and other documents that describe the environmental setting, and biological and cultural resources, and evaluate potential impacts.

This IS/MND has incorporated by reference the documents that are presented below. These planning, engineering, and environmental clearance documents include data and standards related to the Project. The documents were utilized throughout this IS/MND and are available for review on the Cambria Community Services District's website (www.cambriacsd.org/cm/Home.html) and at the CCSD offices located at 1316 Tamson Drive, Suite 201, Cambria, California 93428. The following summarizes the referenced reports:

Local Coastal Program Documents. In accordance with the 1976 Coastal Act, the County of San Luis Obispo (SLO County) has been implementing a Local Coastal Program (LCP). The policies and guidelines within the LCP are intended to protect coastal resources. The County's LCP is part of the County General Plan and Zoning Ordinance, and applies to those areas within the Coastal Zone. Generally, the County applies its Coastal Zone Land Use Ordinance (CZLUO) while reviewing and evaluating projects within areas subject to the Coastal Act. Consistent with State law, the County's LCP also functions as the mandatory General Plan Land Use and Circulation Elements. Key LCP documents that are incorporated by reference include the following, as amended:

- *Local Coastal Program Policy Document* provides overall policy direction for the management of land use within the coastal zone.

- *Framework for Planning* serves as an organizational document, linking land use, resource management, and circulation. The Framework also provides general goals for County decisions on land use, development, and circulation.

- *Coastal Zone Land Use Ordinance (CZLUO)* supplements the established Coastal Zone Land Use Element. The CZLUO also provides provisions typically found in zoning ordinances, including permit and appeal requirements, site design, development, and operational standards, and enforcement provisions.

- *Area Plans* work with the other elements of the LCP and County General Plan. The Area Plans replaced the former community general plans and provide goals, objectives, policies, programs, and standards unique to each area. Key provisions found in the Area Plans are land use maps, programs, and standards guiding development. The County's Coastal Zone is divided into four planning areas- the Project site is located in the North Coast (NC) Planning Area, within the Rural North Coast (RNC) community. The NC Planning Area is addressed in the North Coast Area Plan (NCAP).

North Coast Area Plan. The NCAP was adopted by the SLO County Board of Supervisors on September 22, 1980 (Resolution 80-350) and subsequently revised on August 24, 2008. The NCAP constitutes the County's General Plan Land Use and Circulation Elements for the NC Planning Area. The NCAP describes County land use policies

for the NC Planning Area, including regulations, which are also adopted as part of the Land Use Ordinances and Local Coastal Program. The NCAP allocates land use throughout the planning area by land use categories, which determine the varieties of land use that may be established on a parcel of land, as well as defining their allowable density and intensity. The NCAP is referenced for baseline data and RNC standards throughout this IS/MND.

Cambria Water Supply Alternatives Engineering Technical Memorandum. Cambria Water Supply Alternatives Engineering Technical Memorandum (TM) (CDM Smith, November 27, 2013) (TM), was prepared to present a range of water supply alternatives for the CCSD for the purpose of providing long-term drought protection and seasonally augmenting Cambria's potable water supply. The TM also summarizes the four facilitated public workshops that were conducted on water supply alternatives and describes the technical two-step screening process that was applied. Through the screening process, 8 out of 28 original water supply concepts were selected for further evaluation through formal environmental review. The TM ranked the brackish water alternative (Alternative Concept 5 - San Simeon Creek Road Brackish Water) the highest technically. The proposed Project used Alternative Concept 5 as a starting point. The TM was used in this IS/MND to develop the Project Description.

Draft EIR for Cambria County Water District Water System Improvements. This Draft EIR (Coastal Valley Engineering, Inc., May 1976) was prepared as part of a feasibility report within the formal application for Davis-Grunsky Act funds. This Draft EIR analyzes potential environmental impacts from multiple CCSD-wide improvements including the following: 1) replacement of all deteriorated and undersized mains (approximately 276,630 feet); 2) provision of proper pressure zone separation; 3) installation of new fire hydrants; and 4) provision of a new system of wells near San Simeon Creek to mitigate requirements for water treatment and provide a supplemental water source. The system of wells noted in this 1976 Draft EIR involved construction of a well field in the San Simeon Creek basin, in order to provide water from a larger storage basin than what was then utilized (the Santa Rosa Creek basin). This well field, which was ultimately constructed in 1979, is the well field located at the eastern portion of the current Project site, where the Project's potable water recharge injection well (RIW) is proposed. Therefore, this 1976 Draft EIR was utilized in this IS/MND as a source of baseline data for the Project site.

Preliminary Draft EIR for Proposed Van Gordon Creek Effluent Reservoir for Cambria Community Services District. The project analyzed in this EIR (Boyle Engineering Corporation, June 1979) was part of a larger project involving expansion and modification of wastewater treatment and disposal facilities serving Cambria. An EIR was prepared for the larger project in 1975. Subsequent changes to the original project involving the location of the effluent storage reservoir and method of effluent disposal necessitated the preparation of this EIR as a Supplement to the 1975 EIR. This 1979 Supplemental EIR analyzes impacts associated with a wastewater effluent reservoir and discharging treated effluent from the reservoir to nearby agricultural land (Bonomi Ranch) and Van Gordon Creek. The project included construction of an 80 acre-foot effluent storage reservoir on a 17-acre portion of Molinari Ranch, northeast of the San Simeon Monterey Creek Road/Van Gordon Creek Road intersection. The treated effluent from the CCSD's wastewater treatment plant (WWTP) would be stored at the proposed reservoir and allowed to percolate to the groundwater basin through the bottom of the reservoir. During periods of heavy rain, the treated effluent would be disposed of by spray irrigation on Bonomi Ranch and surface discharge to Van Gordon Creek located southeast/southwest of the San Simeon Monterey Creek Road/Van Gordon Creek Road intersection. This reservoir which was eventually constructed immediately south of the location originally proposed in this 1979 Supplemental EIR, is the Van Gordon Reservoir located at the western portion of the current Project site, where the Project proposes to dispose of the brine generated by the proposed AWTP. Additionally, Bonomi Ranch encompasses (in part) the western portion of the current Project site. Therefore, this 1979 Supplemental EIR was utilized in this IS/MND as a source of baseline and potential impact data associated with the Project's proposed the effluent storage reservoir.

Draft Supplemental EIR for Proposed Van Gordon Creek Reclaimed Water Reservoir for Cambria Community Services District. This Supplemental EIR (Boyle Engineering Corporation, May 1980) was part of the larger project, analyzed in the 1975 EIR. Subsequent to preparation of the 1979 Supplemental EIR discussed above, the proposed site of the effluent storage reservoir was relocated from Molinari Ranch (northeast of the San Simeon Monterey Creek Road/Van Gordon Creek Road intersection) to Bonomi Ranch (southeast of the San Simeon Monterey Creek Road/Van Gordon Creek Road intersection). Additionally, the size of the proposed reservoir was reduced from 80 acre-feet to 45 acre-feet. This 1980 Supplemental EIR addresses the impacts associated with the effluent storage reservoir's changed location and size. This reservoir (Van Gordon Reservoir) is the reservoir where the Project proposes to dispose of the brine generated by the proposed AWTP. Therefore, this 1980 Supplemental EIR was utilized in this IS/MND as a source of baseline and potential impact data associated with the Project's proposed the effluent storage reservoir.

Groundwater Recharge Project Environmental Impact Report. This EIR (Robert Bein, William Frost & Associates, December 1991) analyzes environmental impacts resulting from recharging the San Simeon Creek groundwater basin by discharging reclaimed water extracted from the Van Gordon [effluent storage] Reservoir. Reclaimed water would be treated through a reverse osmosis facility. A negotiation impasse with local landowners to recharge the basin resulted in the CCSD placing the project on hold.

Draft Environmental Impact Report and Appendices Effluent Disposal Field and Stream Restoration Improvements Project. The project analyzed in this EIR (Robert Bein, William Frost & Associates, August 1993) consisted of two components. The first component involved the conversion of a portion of the existing effluent spray disposal fields located generally southeast of the San Simeon Monterey Creek Road/Van Gordon Creek Road intersection into a percolation pond system. The second component involved restoration of two sites along San Simeon Creek containing unstable channel conditions and riverbank erosion which threatened CCSD facilities. The percolation pond system proposed in this 1993 EIR, which was constructed in 1994, was converted from effluent spray disposal fields. This is the pond system located at the southwestern portion of the current Project site. Therefore, this 1993 Supplemental EIR was utilized in this IS/MND as a source of baseline data associated with the Project site.

2.0 PROJECT DESCRIPTION

2.1 PROJECT LOCATION

Cambria is located in central California's coastal region, in the northwest portion of San Luis Obispo County (SLO County); refer to Exhibit 2-1, *Regional Context*. Cambria lies within the Santa Rosa Creek Valley, south of San Simeon. The Project site is located in unincorporated SLO County, north of Cambria, north and east of the Hearst San Simeon State Park (State Park). The Project site is more specifically located southeast of the San Simeon Monterey Creek Road/Van Gordon Creek Road intersection, at 990 San Simeon Monterey Creek Road, Cambria; refer to Exhibit 2-2, *Local Context*.

The approximately 96-acre Project site involves two parcels of land (APNs 013-051-024 and 013-051-008) owned by the Cambria Community Services District (CCSD). Access to the Project site is provided along the northern site boundary, via San Simeon Monterey Creek Road.

2.2 BACKGROUND AND HISTORY

2.2.1 BACKGROUND

All of Cambria's potable water is supplied from groundwater wells in the San Simeon and Santa Rosa Creek aquifers. The San Simeon and Santa Rosa aquifers are relatively shallow and porous, with the groundwater levels typically recharged every year during the rainy season. With pumping, groundwater levels generally exhibit a consistent pattern of high levels during the wet season, steady decline during the dry season, and rapid rise when the wet season resumes. To minimize potable groundwater losses at the aquifer and ocean interface, treated wastewater effluent is percolated into the San Simeon Creek aquifer downstream from its production wells. This practice also helps prevent saltwater intrusion into the freshwater water aquifer. If the groundwater level drops too far, treated effluent and seawater could migrate toward the water supply wells, deteriorating the water quality and potentially rendering the freshwater non-potable. The CCSD operations maintain a positive differential between the up-gradient groundwater levels at its potable well field and the down-gradient wastewater effluent percolation ponds. During later parts of the summer dry season, and depending upon the prior year's precipitation, the CCSD may occasionally operate with a negative gradient, and will periodically pump groundwater from its percolation pond area, in order to control this differential.

For water Year 2013/2014, the total rainfall in Cambria was approximately 80 percent of the minimum rainfall needed to fully recharge the two coastal stream aquifers that are the sole water supply for Cambria. This severe drought condition has placed Cambria's water supply in immediate jeopardy. Consequently, on January 30, 2014, the CCSD Board of Directors declared a Stage 3 Water Shortage Emergency, the most stringent of three water shortage levels.[1] Reflecting the severity of the severe drought conditions experienced in Cambria, as well as the rest of the state of California,[2] on January 17, 2014, Governor Jerry Brown declared a drought emergency for the State of California, and on March 11, 2014, the San Luis Obispo (SLO) County Board of Supervisors proclaimed a local emergency due to the County's drought conditions. The Governor issued a subsequent drought declaration on April 24, 2014.

[1] The Cambrian, http://www.sanluisobispo.com/2014/01/31/2902954/cambria-water-shortage-emergency.html, Accessed June 10, 2014.

[2] State of California Office of Governor Edmond G. Brown Jr. – Newsroom, http://gov.ca.gov/news.php?id=18368, Accessed June 10, 2014.

NOT TO SCALE

RBF CONSULTING A Baker Company

06/14 • JN 141290

CAMBRIA EMERGENCY WATER SUPPLY PROJECT
INITIAL STUDY/MITIGATED NEGATIVE DECLARATION

Regional Context

Exhibit 2-1

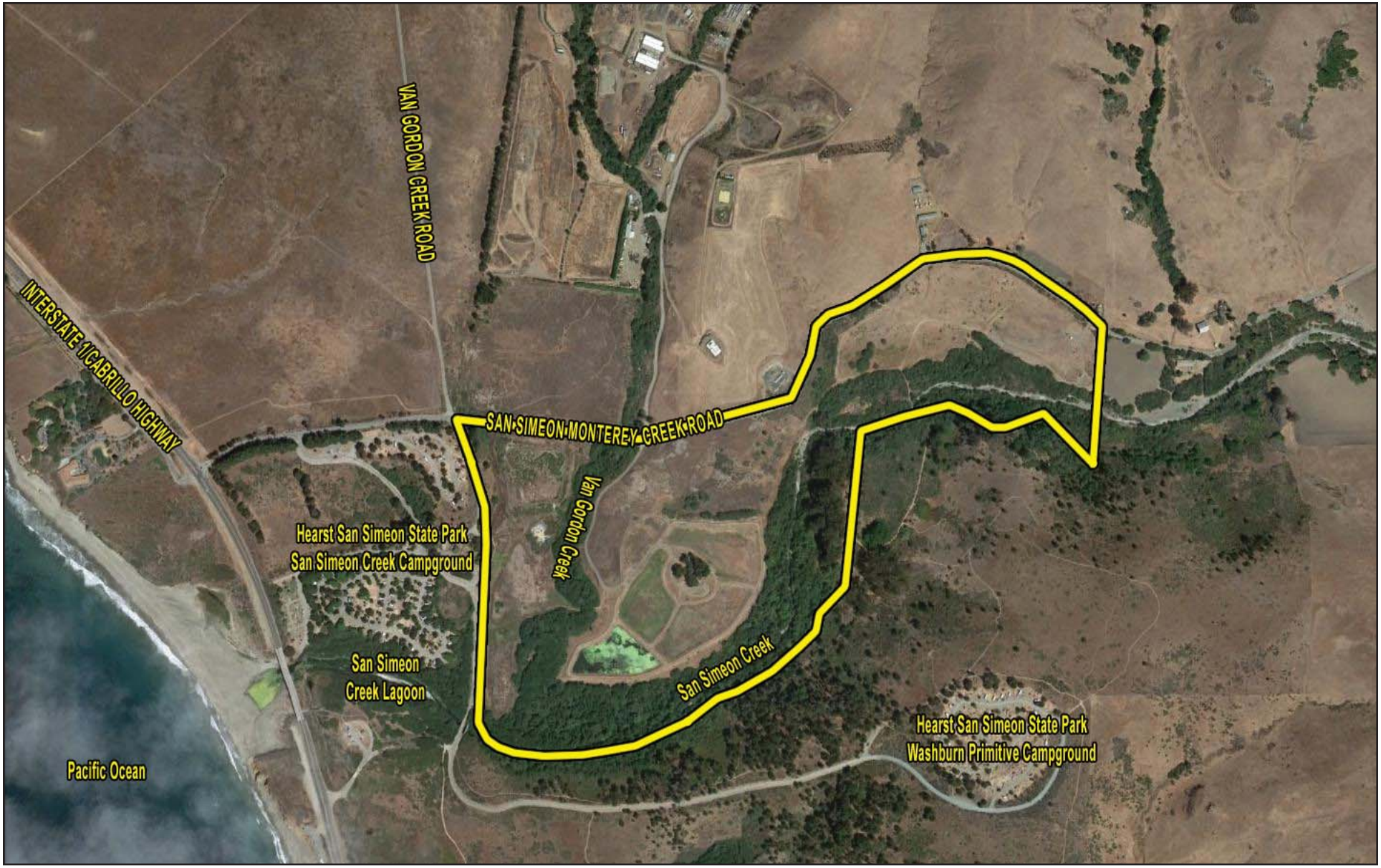

Source: Google Earth, 2014.
- Project Boundary

NOT TO SCALE

RBF CONSULTING A Baker Company

06/14 • JN 141290

CAMBRIA EMERGENCY WATER SUPPLY PROJECT
INITIAL STUDY/MITIGATED NEGATIVE DECLARATION

Local Context

Exhibit 2-2

Uncertainty remains as to whether upper springs that provide underflow to the creeks during the dry season will cease earlier than normal due to the very dry conditions within each watershed. This could result in CCSD well levels dropping at an accelerated rate during the late summer to early fall period, which could lead to water supply shortages, seawater intrusion, pumps losing suction, and potential subsidence.

In response to the ongoing severe drought emergency, and in combination with very stringent water conservation measures, the CCSD is proposing the Cambria Emergency Water Supply Project. The Project proposes to construct and operate emergency water supply facilities at the CCSD's existing San Simeon well field and effluent percolation ponds property. The emergency water supply system would be used to treat brackish water to fully recharge the San Simeon Creek coastal stream aquifers with advance treated water. The brackish water would contain a combination of creek underflow, percolated wastewater treatment plant effluent, and a mixture of freshwater with saltwater that has migrated inland within an underground saltwater wedge.

The Project is proposed to avoid projected water supply shortages by the end of summer/early fall 2014. Benefits would include: preventing the migration of secondary wastewater effluent into the San Simeon well field production wells; preventing seawater from intruding into the CCSD's San Simeon well field production wells; avoiding potential ground subsidence; and maintaining adequate groundwater levels at the San Simeon well field to ensure the production wells operate properly (do not loose suction). The CCSD anticipates continued water shortages and drought conditions over the course of the next 20 years, as a result of climate change impacts, and the likely need for use of the emergency water supply facilities in 8 to 10 years of the next 20 years.[3]

On April 22, 2014, the CCSD submitted an application to SLO County for an Emergency Coastal Development Permit (CDP), in order to construct and operate the proposed Project. On May 15, 2014, the County issued an Emergency CDP (ZON2013-00589), authorizing construction and operation of the proposed emergency Project, subject to various conditions. Construction of the emergency Project began on May 20, 2014. As of the writing of this Initial Study, the Recharge Injection Well (RIW) and its associated monitoring well (MIW) have been constructed. Emergency CDP Condition 5 requires the construction work to be completed within 180 days from issuance of the Emergency CDP.

The Emergency CDP includes a list of conditions that address Project construction/operations, and general land use entitlement matters, as well as hydrology/water quality, light/glare, noise, air quality, cultural resources, and biological resources. As required by Emergency CDP Condition 6, a CDP application for a regular CDP was submitted to the County on June 13, 2014. This Initial Study/Mitigated Negative Declaration has been prepared to satisfy the CEQA requirements for the emergency Project's regular CDP.

2.2.2 PROJECT HISTORY

Under a project cooperation agreement between the CCSD and United States Army Corps of Engineers (ACOE), a study for Cambria's water supply was conducted in 2012-2013. The principal objective of this study was to identify, evaluate, and recommend the best water supply alternative that would provide Cambria with a supplemental water supply during the six dry months of the year (May 1 through October 31). The findings and results of the study were presented in a Cambria Water Supply Alternatives Engineering Technical Memorandum (2013 Engineering TM) (CDM Smith, November 27, 2013). During a series of facilitated public workshops with Cambria residents, 28 water supply alternative concepts and options were identified and further screened Through a tiered evaluation, eight alternative water supply concepts were selected and recommended for further development and evaluation, while the other 20 were rejected based on fatal flaws.

[3] CDM Smith, *Cambria Emergency Water Supply Project Description*, Page 1, June 2014.

The 2013/2014 year drought prompted the CCSD's decision to provide an emergency water supply for Cambria that would be quickly implemented. The technical concept of the highest ranked alternative (San Simeon Creek Road Brackish Water Alternative – Concept 5) was used as a starting point in the development of the proposed Emergency Water Supply Project, which is the subject of this Initial Study.

The Cambria Emergency Water Supply Project San Simeon Creek Basin Groundwater Modeling Report (GMR) (CDM Smith, May 14, 2014) was prepared to support evaluation of the basin water management alternatives to develop additional water supplies for the CCSD to meet the emergency conditions; see Appendix D, *Groundwater Modeling Report*. Among the Report's objectives is to evaluate the potential impacts of the emergency water supply alternatives on San Simeon Creek, and the fresh water lagoon areas to allow for the development of avoidance and mitigation measures.

2.2.3 PROJECT PURPOSE

The Emergency Water Supply Project was proposed in response to Stage 3 Water Shortage Emergency to avoid potentially disastrous consequences to Cambria. The Project is being designed and constructed to treat brackish water using advanced treatment technologies and recharge the CCSD's San Simeon well field aquifer with advance treated water. Through groundwater augmentation, the Project would provide 250 acre-foot of water supply to Cambria over six dry months, or shorter, if the basin is replenished naturally during the pending winter season. In addition to water supply augmentation, the Project will prevent seawater intrusion into the groundwater aquifer and potential subsidence, and protect well pumps from losing suction. Further, to mitigate potential impacts from additional pumping from the Project's extraction well, the Project is being designed to provide up to100 gallons per minute (gpm) of freshwater for purposes of protecting the San Simeon Creek and downstream San Simeon Creek lagoon area when the emergency water supply Project is operational.

2.3 ENVIRONMENTAL SETTING

2.3.1 ON-SITE LAND USES

The Project site is situated on CCSD-owned property, which is currently used for various water and wastewater facilities including a potable water well field (San Simeon well field), an underground potable water supply pipeline, a treated wastewater percolation pond system, and a wastewater effluent storage reservoir); see Exhibit 2-3, *Existing Site Conditions*.

San Simeon Well Field. The San Simeon well field is located at the eastern portion of the Project site. The property is a 92-acre open field, vegetated with grass, shrubs, and some trees. The site varies in elevation, ranging from approximately 20 to 25 feet above mean sea level. This well field contains three municipal potable water wells (SS-1, SS-2, and SS-3), which are used to extract potable water from the San Simeon aquifer. A gravel road connects the wells and traverses this portion of the property. An underground potable water supply pipeline, which generally parallels the northern and western site boundaries, is used to transport the potable water from the well field to Cambria.

Well 9P7, Discharge Pipeline, and Discharge Structure. Well 9P7 is an existing groundwater gradient control well is located in a small stand of Monterey pine in the western portion of the Project site. Well 9P7 is manually controlled and includes a 20 horsepower pump; see Exhibit 2-4, *Existing Well 9P7*. An existing 8-inch PVC discharge pipeline and surface discharge structure are used to discharge pumped groundwater from existing Well 9P7 to Van Gordon Creek. The existing pipeline is used intermittently when water table at the potable water supply well area drops to 1.0 foot above a monitoring well, which is located in between the existing ponds and potable water well field. The pump capacity is about 700 gpm.

Source: CDM Smith, June 2014.

NOT TO SCALE

RBF CONSULTING A Baker Company

06/14 • JN 141290

CAMBRIA EMERGENCY WATER SUPPLY PROJECT
INITIAL STUDY/MITIGATED NEGATIVE DECLARATION

Existing Site Conditions

Exhibit 2-3

NOT TO SCALE

RBF CONSULTING
A Baker Company

06/14 • JN 141290

CAMBRIA EMERGENCY WATER SUPPLY PROJECT
INITIAL STUDY/MITIGATED NEGATIVE DECLARATION

Existing Well 9P7

Exhibit 2-4

Percolation Pond System. The existing wastewater effluent percolation pond system located at the southwestern portion of the Project site involves multiple effluent percolation ponds, which are used for percolation of the secondary effluent from Cambria's Wastewater Treatment Plant (WWTP). Treated effluent from the WWTP is allowed to percolate to the groundwater basin through the ponds, in order to maintain a hydraulic mound and barrier in the lower reach of San Simeon Creek. The Advanced Water Treatment Plant (AWTP) is proposed to be located within this area, on a level vacant lot north of the ponds; see Exhibit 2-5, *AWTP Site*. The flat area of the site is approximately 60,000 square feet (sf) (approximately 15,000 square feet would be used for the AWTP). This area is bordered by a chain link fence to the north and access road for the percolation ponds to the south.

Van Gordon Reservoir. The Van Gordon Reservoir, which has not been in use since about 2005, is an earthen pond originally constructed for the storage of secondary effluent from the WWTP prior to surface spraying on property to the south of the pond. The surface spray operation was stopped following construction of the percolation ponds in 1994. As a result, the pond was used as an intermediate storage basin prior to discharge into the percolation ponds. Effluent piping allows direct discharge into the percolation ponds without using the reservoir, which is the current operating practice being followed. The pond is trapezoidal with a length and width of approximately 300 feet and a surface area of between 105,000 square feet to 137,000 square feet, depending on water level in the pond. The berm elevation is approximately 47 feet with an interior slope of 4:1, an exterior slope of 3:1, and an overall depth varying from 8 to 10 feet.[4] Cambria Emergency Water Supply Project Description (CDM PD) (CDM Smith, June 2014) Figure 2-9, *Brine Pond Section*, shows the existing brine pond and groundwater elevation.

The CCSD owns a vacant single-family dwelling, which is located on the east side of Van Gordon Road, approximately 750 feet south of San Simeon Monterey Creek Road. This dwelling is being considered by the CCSD for use as instrumentation and communications equipment storage. San Simeon Creek and Van Gordon Creek traverse the southeastern and western portions of the property, respectively.

2.3.2 SURROUNDING LAND USES

The land uses surrounding the Project site are illustrated on Exhibit 2-2 and summarized, as follows:

- *North:* San Simeon Monterey Creek Road (aka San Simeon Creek Road) forms the Project site's northern boundary. Agricultural uses are located further north, beyond the road.
- *South:* San Simeon Creek and State Park Washburn Primitive Campground are located to the south.
- *East:* Agricultural uses are located to the east.
- *West:* Van Gordon Creek Road forms the Project site's western boundary. The State Park's San Simeon Creek Campground extends along the west side of Van Gordon Creek Road. There are two single-family dwellings within the campground, which provide housing for State Park personnel (State Park camp hosts). The dwellings are located further west beyond Van Gordon Creek Road, approximately 750 feet south of San Simeon Monterey Creek Road.

2.4 COUNTY OF SAN LUIS OBISPO GENERAL PLAN LAND USE AND COMBINING DESIGNATIONS

The Project site is located in the North Coast (NC) Planning Area, within the Rural North Coast (RNC) community. The NC Planning Area is addressed in the North Coast Area Plan (NCAP), which constitutes the County's General Plan Land Use and Circulation Elements for the NC Planning Area. The NC Planning Area is entirely within

[4] Based on field survey collected by North Coast Engineering, Inc. in May 2014.

NOT TO SCALE

RBF CONSULTING A Baker Company

06/14 • JN 141290

CAMBRIA EMERGENCY WATER SUPPLY PROJECT
INITIAL STUDY/MITIGATED NEGATIVE DECLARATION

AWTP Site

Exhibit 2-5

California's Coastal Zone. The *Coastal Zone North Coast Planning Area Rural Land Use Category Map*[5] separates the NC Planning Area into land use categories, which define regulations for land uses, density, and intensity of use. As shown on the Land Use Category Map, the Project site is designated Agriculture. The *Coastal Zone North Coast Planning Area Rural Combining Designation Map*[6] assigns Combining Designations to NC areas containing hazards, sensitive resource areas, environmentally sensitive habitat areas, historic and archaeologically sensitive areas, and public facilities. As shown on the Combining Designation Map, portions of the Project site are assigned the following Combining Designations:

- Geologic Study Area (GSA);
- San Simeon Creek Flood Hazard (FH);
- Sensitive Resource Area (SRA);
- Environmentally Sensitive Habitat, Terrestrial Habitat (ESH-TH); and
- Environmentally Sensitive Habitat, Coastal Creek (ESH-CC).

Additionally, the Project site (and all of the NC Planning Area) is assigned Local Coastal Program (LCP) Combining Designation.

2.5 PROJECT CHARACTERISTICS

This section is based upon the Cambria Emergency Water Supply Project Description (CDM PD) (CDM Smith, June 2014), which describes the Project in detail. The proposed Cambria Emergency Water Supply Project facilities are shown in Exhibit 2-6, *Project Overview*, and described in the sections below. The emergency water supply Project facilities include the following components:

- *Existing Well 9P7* – The Project's source water is the San Simeon Creek aquifer from existing Well 9P7, which would provide reclaimed water to the AWTP.

- *Pipelines* – An existing eight-inch pipeline and a new extension to this pipeline are proposed to transport the brackish water between Well 9P7 and the AWTP. A product water pipeline is proposed to transport the product water between the proposed AWTP and proposed RIW. A pipeline is proposed to transport the filtrate (product water) between the proposed AWTP and proposed Lagoon Injection Wells (LIWs). A brine disposal pipeline is proposed to transport the brine between the proposed AWTP and the existing Van Gordon Reservoir following its modification to an evaporation pond.

- *Advanced Water Treatment Plant* – An AWTP is proposed to treat brackish water to advance treated water quality suitable for injection into the groundwater basin to augment the potable water supply. The brackish water would be a combination of creek underflow, percolated secondary effluent, and a mix of freshwater and deeper saltwater from an underground saltwater wedge that extends underground. The AWTP's main treatment processes would include membrane filtration (MF), reverse osmosis (RO), and advanced oxidation process (AOP) utilizing ultraviolet (UV) light and hydrogen peroxide.

- *Recharge Injection Well (RIW)* – To meet California Department of Public Health and Regional Water Quality Control Board regulations, the treated AWTP product water would be re-introduced/pumped for injection into the San Simeon groundwater basin, where it would travel no less than 60 days underground before being pumped by the existing San Simeon well field. Monitoring Injection Well-1 (MIW-1) is proposed immediately east of RIW.

[5] County of San Luis Obispo Website, http://www.slocounty.ca.gov/planning/zoning/Map_Image_Download_Center/Land_Use_Maps.htm, Accessed May 15, 2014.
[6] Ibid.

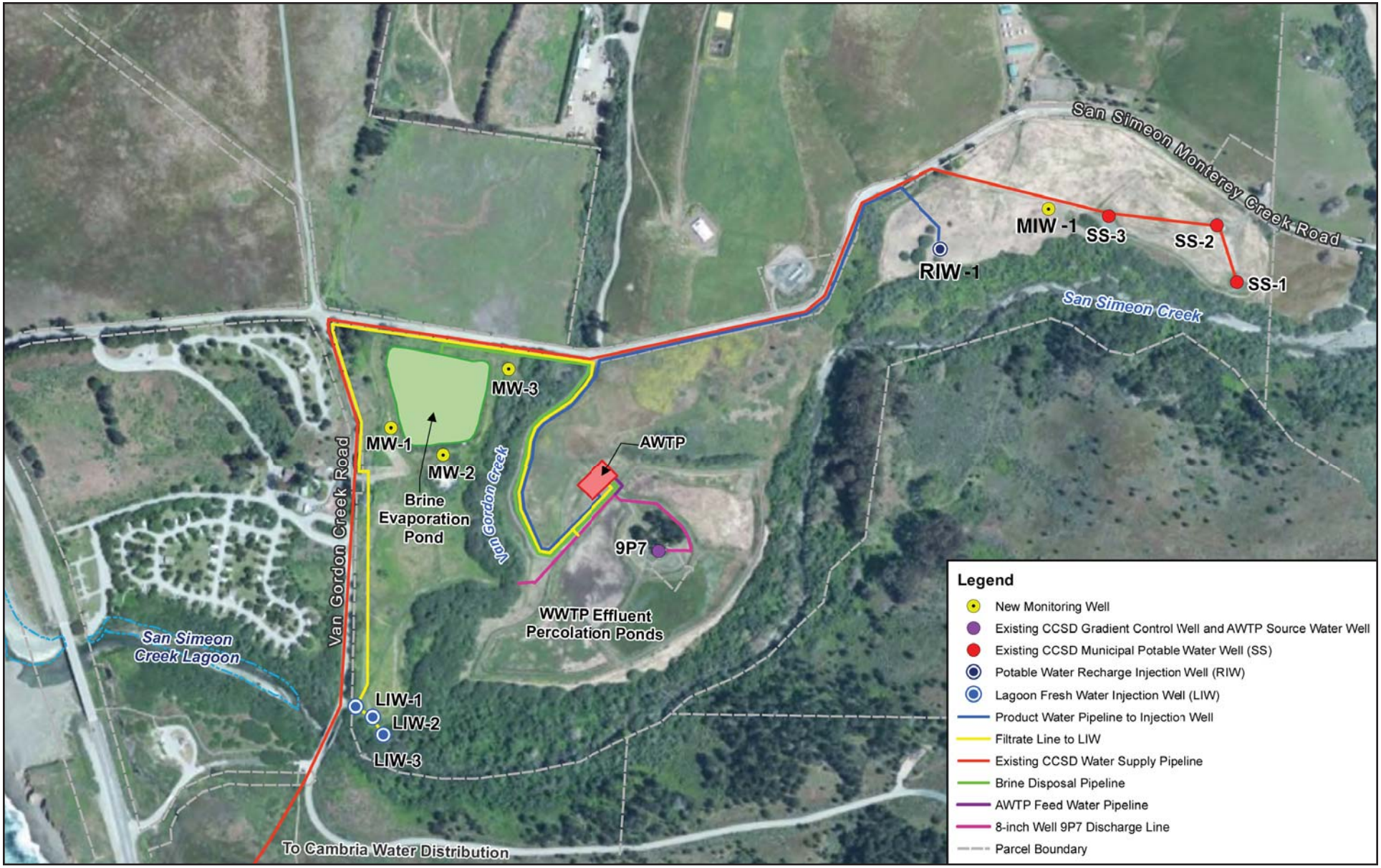

Source: CDM Smith, June 2014.

NOT TO SCALE

RBF CONSULTING A Baker Company

06/14 • JN 141290

CAMBRIA EMERGENCY WATER SUPPLY PROJECT
INITIAL STUDY/MITIGATED NEGATIVE DECLARATION

Project Overview

Exhibit 2-6

- *Existing Van Gordon Reservoir Evaporation Pond* – The AWTP generated waste stream (brine) would be disposed for evaporation in the existing Van Gordon Reservoir after modifying the reservoir into an evaporation pond. The evaporation pond would be constructed to meet State standards for lining and monitoring. The pond liner system would provide containment of brine to protect soil and groundwater beneath. The brine evaporation would be aided with five mechanical spray evaporators. Monitoring Wells MIW-2, MIW-3, and MIW-4 are proposed around the evaporation pond.

- *Lagoon Injection Well (LIW)* – AWTP product water would be pumped for discharge into the San Simeon Creek via three LIWs to mitigate potential impacts to the creek and downstream lagoon area from the operation of extraction well 9P7. The LIWs would be spaced 25 to 40 feet apart. As an alternative to the three LIWs, the existing Well 9P7 discharge pipeline and discharge structure may be utilized to discharge directly into Van Gordon Creek adjacent to the AWTP.

- *Monitoring Wells* – A new monitoring well is proposed at the San Simeon well field between RIW and the San Simeon wells. Three monitoring wells are proposed upgradient and downgradient from the evaporation pond.

The Project would be capable of generating 400 gpm of water, out of which 300 gpm would be used for emergency water supply to Cambria and 100 gpm would be used to mitigate potential impacts to the San Simeon Creek and down gradient fresh water lagoon. These Project facilities are further described below.

2.5.1 SOURCE WATER – EXISTING WELL 9P7

The source water for the Project would be groundwater from San Simeon basin pumped using existing Well 9P7. The extracted groundwater would be conveyed to the AWTP using an existing eight-inch PVC pipeline originally constructed to discharge pumped groundwater from Well 9P7 to Van Gordon Creek. A pipeline extension (AWTP feed water pipeline) is proposed to transport the brackish water between the existing pipeline and the AWTP.

Key water quality data for Cambria Wastewater Treatment Plant (WWTP) effluent and groundwater extracted from Well 9P7 is summarized in CDM PD Table 2-1. As shown, water quality for Well 9P7 is improved when compared to wastewater effluent, which is likely due to the influence from the creek underflow.

2.5.2 ADVANCED WATER TREATMENT PLANT (AWTP)

The AWTP would consist of multiple unit processes, including microfiltration (MF) or ultrafiltration (UF), reverse osmosis (RO), advance oxidation process (AOP) utilizing ultraviolet (UV) light and hydrogen peroxide (H_2O_2) and post-treatment chemical addition designed to stabilize the treated water before it is conveyed to the RIW for recharge. The overall treatment process flow diagram is shown in Exhibit 2-7, *AWTP Process Flow Diagram*.

CDM PD Table 2-2 summarizes recoveries, waste flows, and treatment process capacities for MF and RO systems required to meet the target potable water augmentation of 250 AF and San Simeon Creek fresh water recharge of 100 AF. CDM PD Table 2-3 summarizes the projected water quality of RO permeate and concentrate. Since MF does not remove any ionic species (e.g., salt), it is expected that the MF filtrate and backwash waste would retain ionic water qualities similar to the source water.

Key AWTP unit processes equipment would be pre-packaged and mounted in shipping containers. UV vessels, water tanks, pump skids and self-contained chemical totes would be installed outdoors on concrete housekeeping pads. The AWTP layout is shown is Exhibit 2-8, *AWTP Site Layout*.

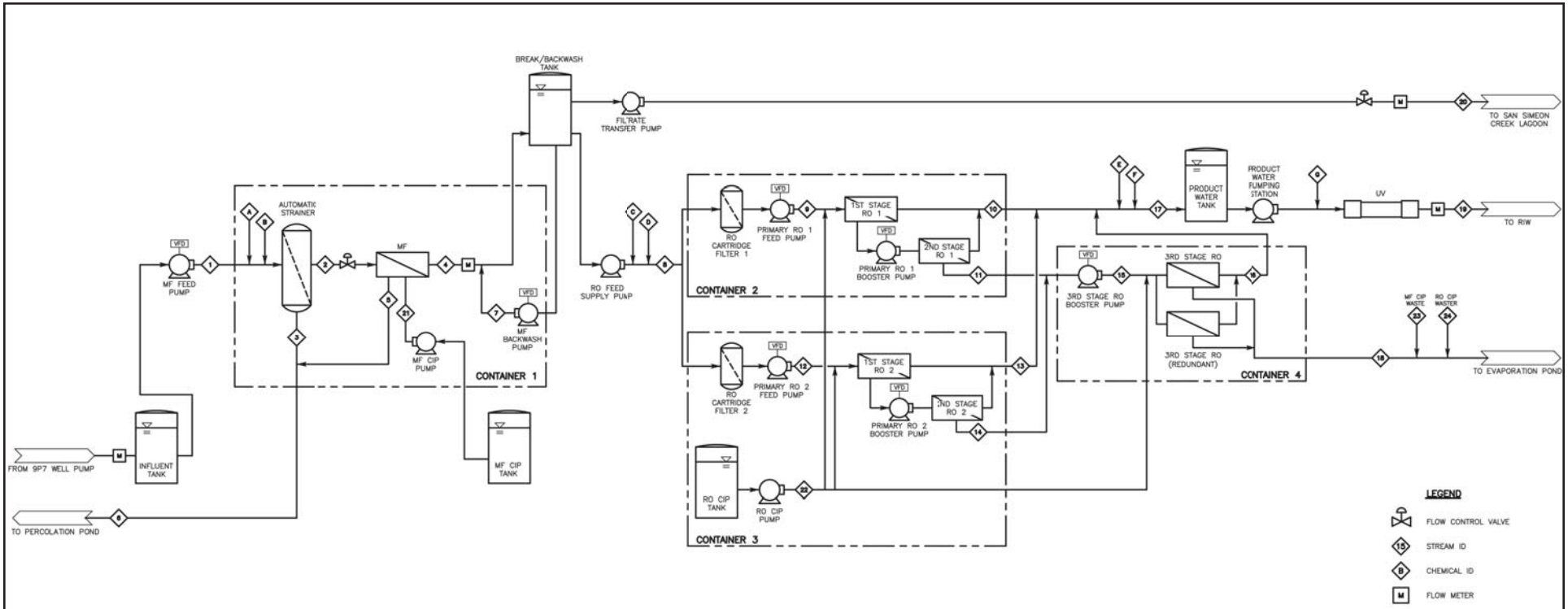

FLOW BALANCE

AUTOMATIC STRAINER RECOVERY	99%
MF RECOVERY	97%
OVERALL RO RECOVERY	92%
CIP WASTE	0.5%

FLOW STREAM	AWTP FEED	MF FEED	AUTOMATIC STRAINER WASTE	MF FILTRATE	MF BACKWASH WASTE (NOTE 1)	MF AND AUTOMATIC STRAINER COMBINED WASTE	MF BACKWASH FEED (NOTE 1)	COMBINED RO FEED	PRIMARY RO 1 FEED	PRIMARY RO 1 PERMEATE	PRIMARY RO 1 CONCENTRATE	PRIMARY RO 2 FEED	PRIMARY RO 2 PERMEATE	PRIMARY RO 2 CONCENTRATE	THIRD STAGE RO FEED	THIRD STAGE RO PERMEATE	COMBINED RO PERMEATE	THIRD STAGE RO CONCENTRATE	PRODUCT WATER TO RECHARGE (INJECTION WELL (RIW)	MF FILTRATE TO SAN SIMEON CREEK LAGOON	MF CIP FEED (NOTE 1)	RO CIP FEED (NOTE 1)	MF CIP WASTE (NOTE 1)	RO CIP WASTE (NOTE 1)
FLOW STREAM ID	**1**	**2**	**3**	**4**	**5**	**6**	**7**	**8**	**9**	**10**	**11**	**12**	**13**	**14**	**15**	**16**	**17**	**18**	**19**	**20**	**21**	**22**	**23**	**24**
Average Flow (GPM)	691	684	7	629	55	62	55	529	265	212	53	265	212	53	106	64	487	42	484	100	2	1	2	1
Pressure (psi)	40	30	5	5	5	5	30	30	122	15	115	122	15	115	215	15	15	20	30	30	20	20	20	20
TDS (mg/L)	1374	1374	1374	1374	-	1374	1374	1374	1366	101	6756	1366	101	6756	6756	1108	222	14529	222	1374	-	-	-	-

CHEMICAL	AQUEOUS AMMONIA	SODIUM HYPOCHLORITE	THRESHOLD INHIBITOR	SULFURIC ACID	SODIUM HYDROXIDE	CALCIUM CHLORIDE	HYDROGEN PEROXIDE
CHEMICAL STREAM ID	A	B	C	D	E	F	G
Bulk Chemical Concentration	19.00%	12.50%	100.00%	50.00%	25.00%	34.70%	27.00%
Chemical Dose, Max	1.5 mg/L	6.0 mg/L	3.0 mg/L	180 mg/L	50 mg/L	35 mg/L	5.0 mg/L
Dosing Rate, Max	8.3 gpd	38 gpd	1.8 gpd	49.0 gpd	112 gpd	52 gpd	11.8 gpd

NOTES
1. INTERMITTENT FLOW.
2. ALL THE CHEMICAL DOSING SKIDS EXEPT THRESHOLD INHIBITOR WILL BE INSTALLEDIN CONTAINER 5 (NOT SHOWN). THRESHOLD INHIBITOR DOSING SKIDS WILL BE INSTALLED IN CONTAINER 2 AND CONTAINER 3.
3. MAIN CONTROL ROOM AND OFFICE SPACE WILL BE SUPPLIED IN CONTINER 6 (NOT SHOWN).
4. RO FLOW CONDITIONS ARE BASED ON AN AVERAGE MEMBRANE AGE OF 3 YEARS.

Source: CDM Smith, June 2014.

AWTP Process Flow Diagram

Exhibit 2-7

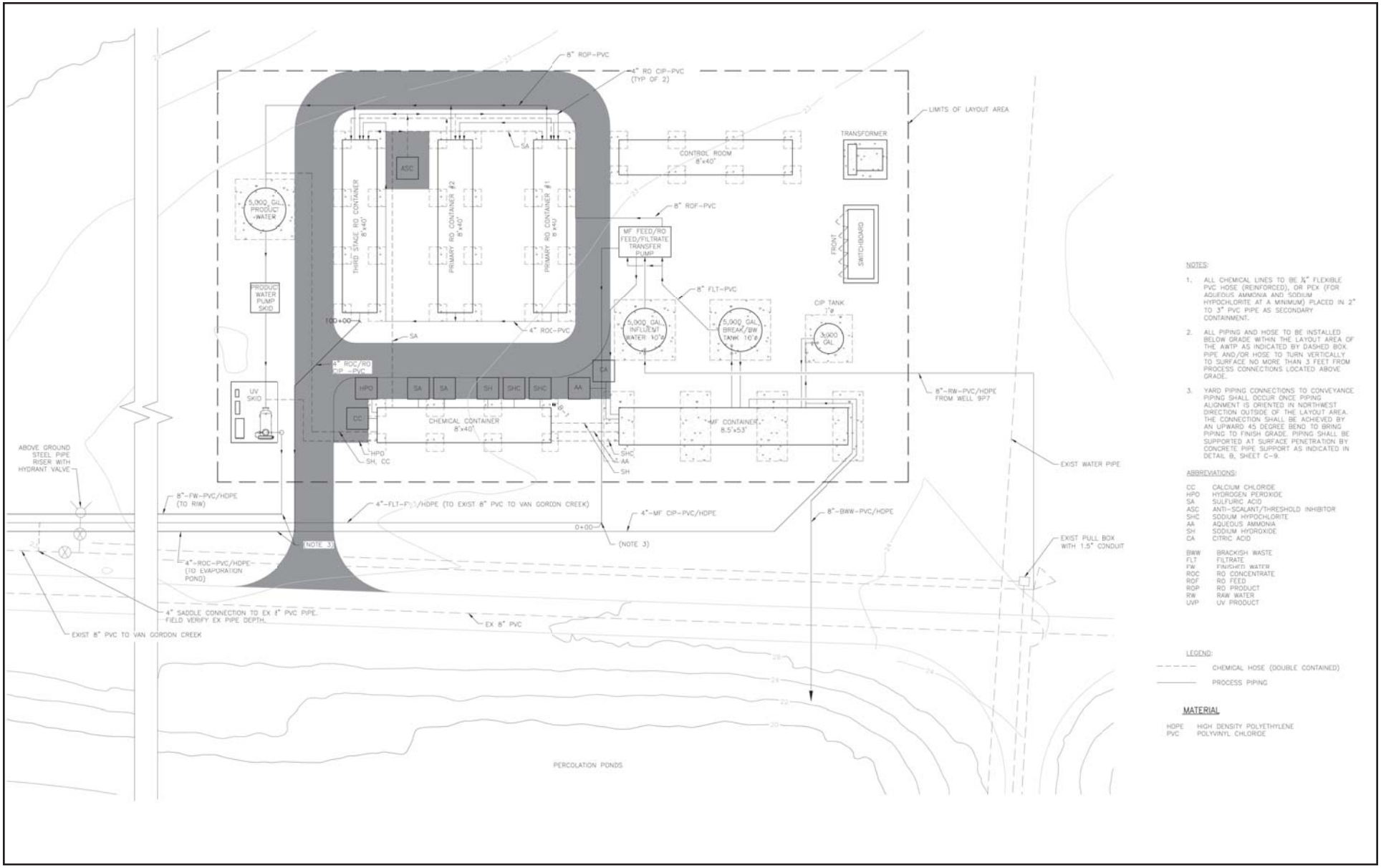

Source: CDM Smith, June 2014.

NOT TO SCALE

RBF CONSULTING A Baker Company

06/14 • JN 141290

CAMBRIA EMERGENCY WATER SUPPLY PROJECT
INITIAL STUDY/MITIGATED NEGATIVE DECLARATION

AWTP Site Layout

Exhibit 2-8

MAIN TREATMENT PROCESSES

Membrane Filtration

The membrane filtration system provides pretreatment for the RO system to reduce the particulate and biological fouling of the RO membranes. The membrane filtration system would remove inert particulates, organic particulates, colloidal particulates, pathogenic organisms, bacteria and other particles by the membrane's size-exclusion sieve action. Table 2-1, *Membrane Filtration Water Quality Goals*, presents the membrane filtration water quality goals.

Table 2-1
Membrane Filtration Water Quality Goals

Constituent	Design Criteria
Cryptosporidium	Undetectable[1]
Giardia	Undetectable[2]
Suspended Solids	Undetectable[3]
95th Percentile Filtrate Turbidity	<0.1 NTU
Filtrate Silt Density Index (SDI)	<3
Source: CDM Smith, *Cambria Emergency Water Supply Project Description*, June 2014.	

Pre-Treatment Chemical Addition. Ammonium hydroxide and sodium hypochlorite would be added downstream of the membrane feed pumps and upstream of the membrane filtration pre-filters for chloramination to control the biological fouling of the membrane filtration membranes.

Membrane Filtration Pre-Filters. Membrane filtration pre-filters or strainers would be provided immediately upstream of the membrane filtration membranes to protect the membranes from damage and/or fouling due to larger particles.

Membrane Filtration Systems. Both the MF and UF are capable of achieving the membrane filtration water quality goals described in Table 2-1 above. CDM PD Figure 2-5 shows the membrane filtration system layout. The microfilter backwash associated with AWTP operations would be returned to the existing percolation ponds adjacent to the AWTP.

Membrane Filtration Break Tank. The membrane filtration break tank would serve as a flow equalization reservoir for the membrane filtration filtrate prior to being pumped to the RO system.

Reverse Osmosis

While reverse osmosis (RO) is used for purification and desalination in water treatment, it is also used effectively in drinking water and wastewater treatment processes for removal of a wide array of dissolved constituents, including CECs. RO is generally recognized as the best available treatment for reducing TDS and many CECs in brackish water, which will include treated wastewater effluent. The RO process further serves as an effective barrier against potential pathogens. Therefore, the RO process is included within the AWTP for the Project the RO treatment includes the following processes:

- RO feed supply pump;
- RO pre-treatment chemical addition (antiscalant and sulfuric acid for scale control);
- Cartridge filters;
- RO feed pumps; and
- RO.

Antiscalant would be added to control scaling of the RO membranes. Sulfuric acid would be added to lower the pH of the RO feed water, in order to control the calcium carbonate, sulfates of calcium, barium, and strontium from limiting the RO recovery. Each RO train would be paired with a dedicated feed pump, which would be required in addition to the RO booster pumps. A three-stage RO configuration would be provided to increase recovery and reduce brine flow. CDM PD Figures 2-6a through 2-6c show the RO system layout. All chemicals will be stored in double containment to prevent leaks from entering the environment.

Advanced Oxidation Process (AOP)

The final advanced water purification process is disinfection and advanced oxidation, as required by the most current State Groundwater Recharge Regulations. A disinfection process is needed to meet the pathogenic microorganism control requirements included in the regulations. The UV reactors serve a dual purpose: disinfection; and, with addition of hydrogen peroxide upstream, advanced oxidation. Advanced oxidation processes (AOPs) AOPs are considered the best available technology to address the destruction of CECs that are not fully removed by the RO membranes. As with the RO unit process, all chemicals will be stored in double containment to prevent leaks from entering the environment.

As noted above, the UV/H2O2 system, which has been used extensively for removal of microconstituents, found in treated water, is the most common AOP technology for indirect potable reuse (IPR). The UV/H2O2 system would be designed to meet the most current groundwater recharge regulations that provide a minimum performance criteria for AOP systems used for a groundwater recharge system. The UV system layout is shown on CDM PD Figure 2-7.

Post-Treatment/Stabilization

Product water quality is required to minimize corrosion of the conveyance pipeline and the pumping equipment (Langelier Saturation Index). CDM PD Table 2-5 summarizes the stabilization goals for the purified water. The post-treatment strategy assumed includes the addition of calcium chloride to increase hardness and the addition of caustic soda to increase pH. All chemicals used for post-stabilization will be stored in double containment to prevent leaks from entering the environment.

POWER SUPPLY AND CONSUMPTION

Power demand for the AWTP is estimated to be 650 kilovolt-amps (KVA). Power for the AWTP would be obtained from a PG&E supplied pad mount transformer connected to an existing PG&E power line servicing Well Site 9P7 via a new power drop from the well site along the well site access road. The estimated capacity of the transformer would be 750 KVA at 480/277 volts. PG&E would provide primary power to the transformer and supply and set the transformer. It is estimated the service would be 1200 amperes. CDM PD Table 2-6 summarizes an estimated electrical load from the AWTP's major process equipment.

TIME AND HOURS OF OPERATION

The AWTP is assumed to operate continuously for six months of the year, while the drought conditions are most severe.

2.5.3 EVAPORATION POND

The AWTP-generated waste streams, primarily RO brine, would be sent to Van Gordon evaporation pond for disposal via evaporation. The brine would be added to the pond via a pipe on the northeast side of the pond. Refer to Exhibit 2-9, *Brine Pond Plan*. The existing Van Gordon Reservoir, originally constructed for storage of the secondary effluent from the CCSD's wastewater treatment plant, would be lined with an impermeable liner system to meet the State's Title 27 Class II waste discharge standards. In addition, to accelerate evaporation of the evaporation pond disposed RO brine, the Project proposes five (four duty and one standby) mechanical spray evaporators.

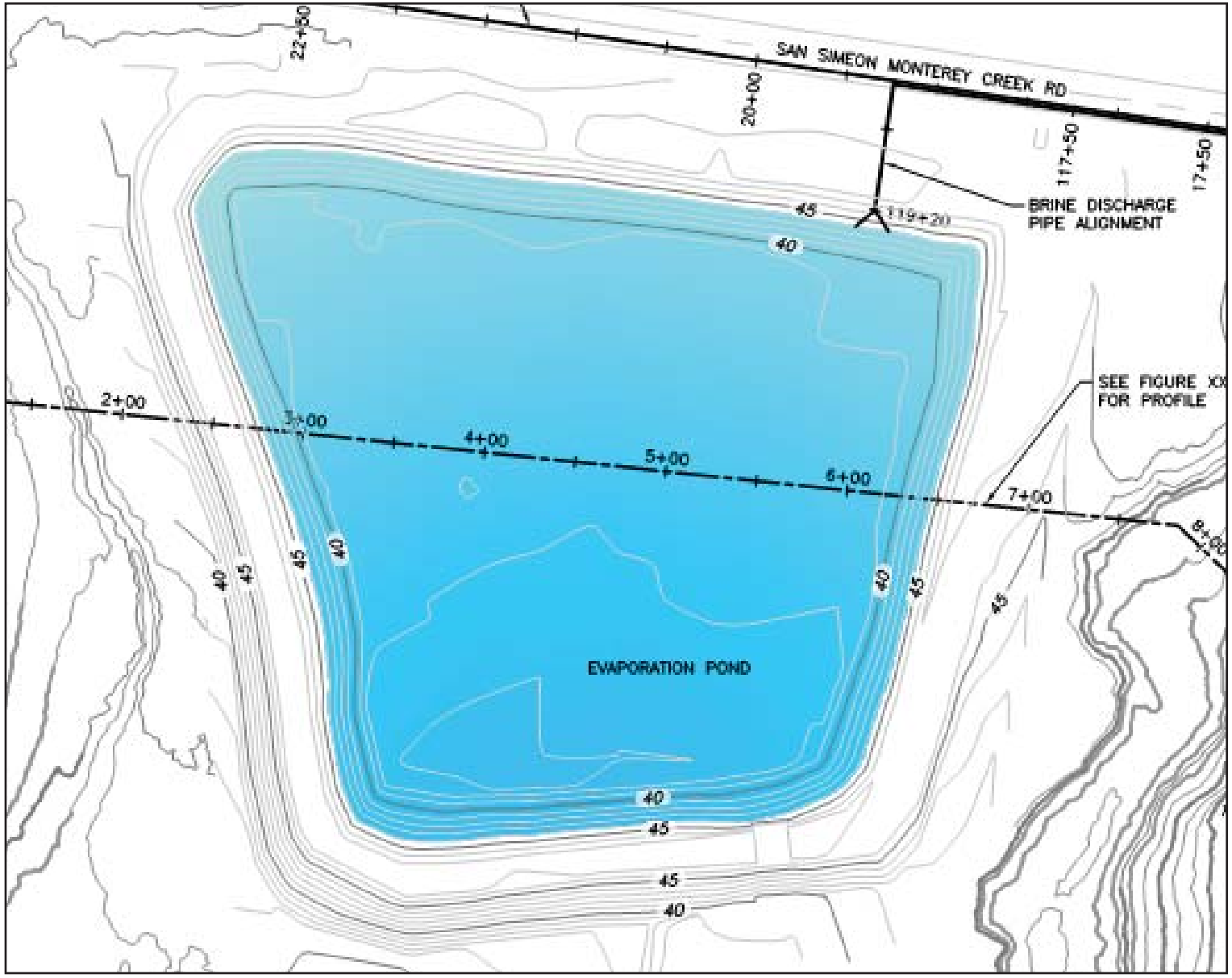

Source: CDM Smith, June 2014.

CAMBRIA EMERGENCY WATER SUPPLY PROJECT
INITIAL STUDY/MITIGATED NEGATIVE DECLARATION

Brine Pond Plan

RBF CONSULTING A Baker Company

06/14 • JN 141290

Exhibit 2-9

An existing spillway along the pond's southern berm would be demolished and regraded to provide a uniform top of slope elevation around the pond. The pond would operate with a minimum freeboard of 2.0 feet, per the Title 27 requirements. The pond would be designed to provide for a 5.0-foot minimum separation between the groundwater elevation and bottom of the pond, also per Title 27 requirement. CDM PD Figure 2-9, Brine Pond Section, shows the existing brine pond and groundwater elevation.

Title 27 requires installation of an impermeable liner, a leachate collection and removal system (LCRS), and a vadose zone monitoring system. The primary liner and textured drain liner materials would be impermeable. The LCRS would include a perforated conductor pipe and trench along the pond bottom terminating into a collection sump. The LCRS would be designed to maintain less than 1.0 foot of head on the secondary liner. The LCRS sump would have a surface entry pipe for monitoring and removal of any accumulated leachate.

Minimal earthwork would be performed to grade the bottom of the pond and install the LCRS, vadose zone monitoring system. The pond would be designed to withstand the maximum credible earthquake[7] and the 100-year flood. Based on the FEMA map of the 100-year flood plain, the water surface elevation would rise to approximately the bottom of the exterior berm around elevation.

The brine waste would be evaporated via natural evaporation as well as mechanical spray evaporators. Over time, the dissolved salt concentration in the pond would increase until it begins to precipitate from solution. The super-concentrated waste, whether liquid or solid, would be removed from the site for disposal. In concentrated slurry form, the waste would be pumped to trucks and hauled away for disposal at a licensed disposal site. In dried solids form, the solids accumulated on pond bottoms would be removed manually using shovels and barrels and disposed offsite at a licensed disposal site.

SPRAY EVAPORATORS

Based on the estimated annual evaporation rate in the region and 42 gpm of average RO brine generation, the Van Gordon evaporation pond does not have sufficient surface area to naturally evaporate the full RO brine flow. Therefore, enhanced evaporation utilizing mechanical spray evaporators is proposed at the Van Gordon evaporation pond. To accelerate evaporation of the disposed RO brine, the Project proposes five (four duty and one standby) mechanical spray evaporators. The evaporators are proposed along the pond's west berm, in order to provide the greatest setback from the Van Gordon Creek corridor. The design criteria of the spray evaporator are summarized in CDM PD Table 2-7. Sound enclosures are proposed around three sides of the mechanical evaporators to reduce noise. Exhibit 2-10, *Spray Evaporator*, shows a spray evaporator and sound enclosure, and the proposed locations.

Drift would be controlled with onsite weather stations, which would turn the evaporators on or off depending on wind speed and/or direction to control drift. The evaporators would be operated only when wind direction, wind velocity, temperature and humidity are within the preset ranges. CDM PD Figure 2-11 shows a weather station control panel.

POWER SUPPLY AND CONSUMPTION

Power demand for the evaporation ponds estimated to be 250 KVA. Power for the evaporation ponds would be obtained from a PG&E supplied pad mount transformer connected to an existing PG&E overhead power line along San Simeon Road via a new power drop along Van Gordon Creek Road. The estimated capacity of the transformer would be 300 KVA at 480/277 volts. CDM PD Table 2-8 summarizes an estimated electrical load from the spray evaporators at the brine evaporation pond.

[7] Based on a recent geotechnical investigation, the existing embankments appear to be able to withstand the maximum credible earthquake (CDM PD, Page 20).

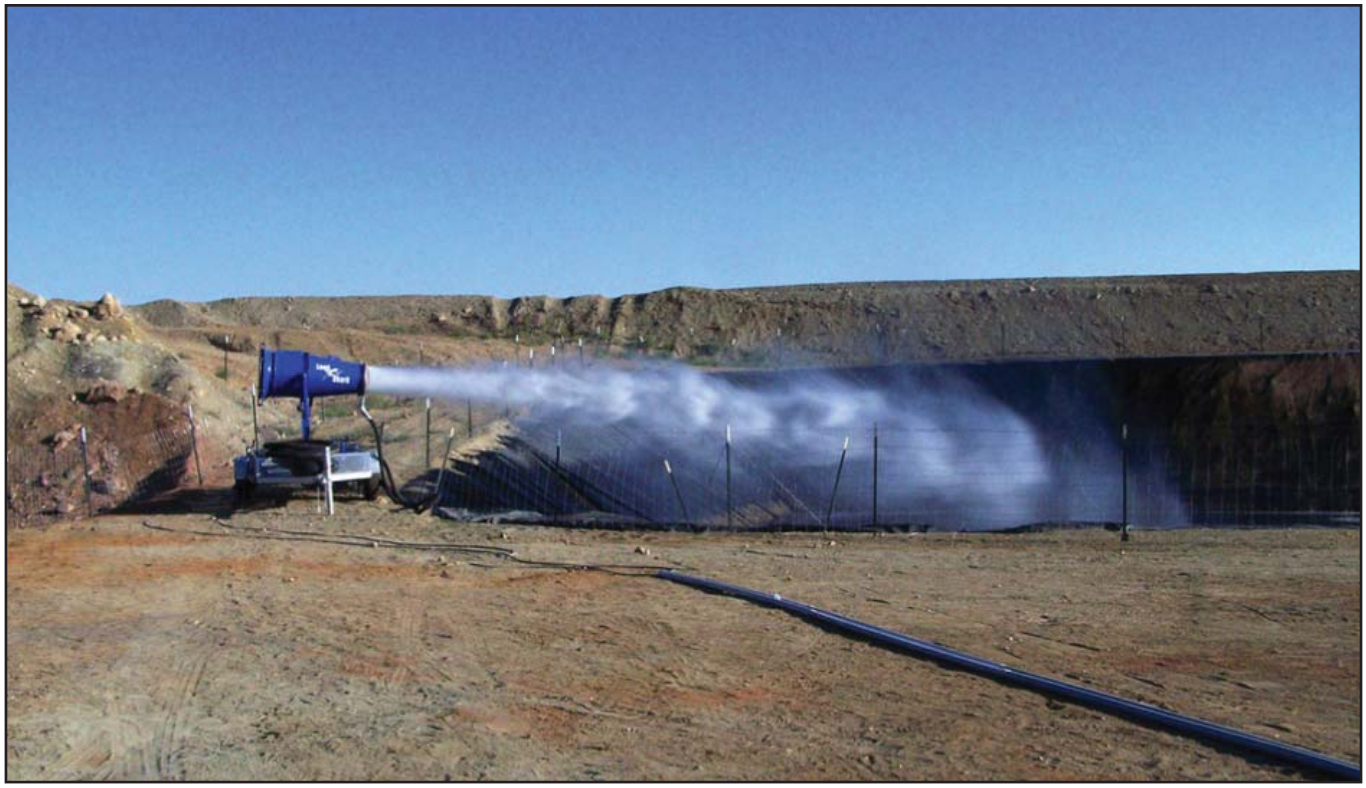

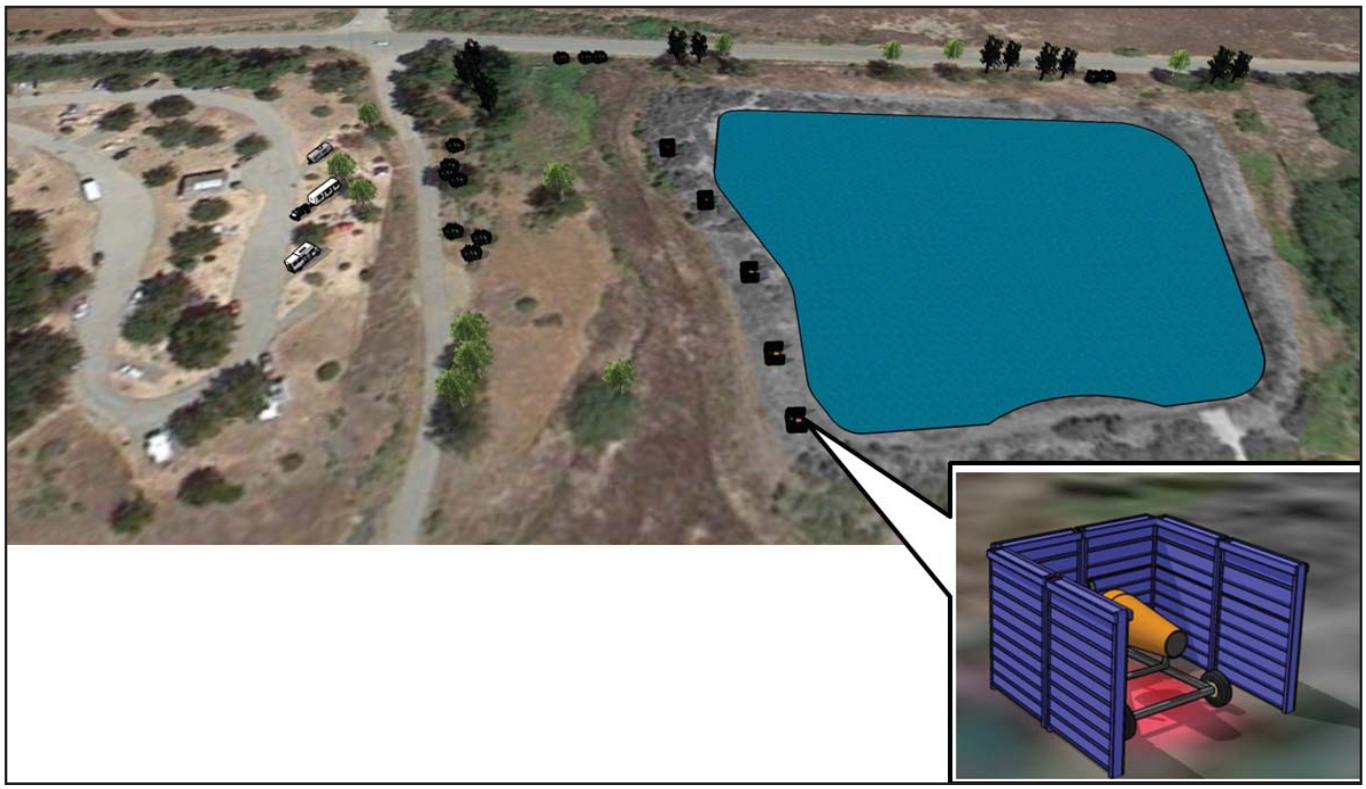

NOT TO SCALE

RBF CONSULTING A Baker Company

06/14 • JN 141290

CAMBRIA EMERGENCY WATER SUPPLY PROJECT
INITIAL STUDY/MITIGATED NEGATIVE DECLARATION

Spray Evaporator

Exhibit 2-10

TIME AND HOURS OF OPERATION

The spray evaporator operation would be controlled by the weather stations and would operate only when wind direction and velocity, temperature, and humidity are within the preset ranges. Considering the local weather, it is assumed the spray evaporators would operate approximately 12 hours per day, during day time, and year round (i.e., 50 percent of the time on annual average).

2.5.4 PROJECT PIPING SYSTEMS

YARD PIPING

The schedule of yard piping, which would be contained within the AWTP, is provided in CDM PD Table 2-9 and shown in CDM PD Figure 2-4. All yard piping would be installed below ground, under the AWTP.

CONVEYANCE PIPING

The schedule of conveyance piping, which would be installed above-ground, is provided in Table 2-2, *Conveyance Pipeline Schedule*, and shown in Exhibit 2-11, *Conveyance Piping Plan*.

Table 2-2
Conveyance Pipeline Schedule

Pipe	Size	Material	Pressure Rating	Length
Product Water (Existing Well 9P7 pipeline to AWTP)	8 inches	PVC or HDPE[1]	150 psi	200 feet
Product Water (AWTP to RIW)	8 inches	PVC or HDPE	150 psi	3,400 feet
Brine (AWTP to Brine Evaporation Pond)	4 inches	PVC or HDPE	150 psi	2,000 feet
MF Filtrate (AWTP to LIW)	4 inches	PVC or HDPE	150 psi	4,400 feet

Notes:
1. HDPE – High density polyethylene; and PVC – Polyvinyl chloride

2.5.5 RECHARGE INJECTION WELL (RIW)

The stabilized AWTP finished product water would be pumped for injection into the groundwater basin at the San Simeon well field utilizing a new recharge injection well (RIW). RIW is proposed west of existing potable supply water Well SS-3. In addition, a monitoring well (MIW) is proposed between RIW and the SS-3 Well.

RIW would be 100 feet deep and constructed of 10-inch diameter mild steel well casing with 45 feet of type 304L stainless steel, wire-wrap screen with 0.08-inch wide slot openings. It is screened from 50 to 95 feet below ground surface (bgs). RIW would have a 5.0-foot, stainless steel sediment trap below the well screen. It is anticipated that 454 gpm would be injected into RIW.

The wellhead facilities would be completed above grade. Wellhead facilities would include steel pipe, a control valve to control the flow into RIW, a flow meter to measure the flow, and isolation valves for removal of above ground equipment. No pumps or noise generating equipment are proposed at RIW. A small control panel is proposed at the wellhead.

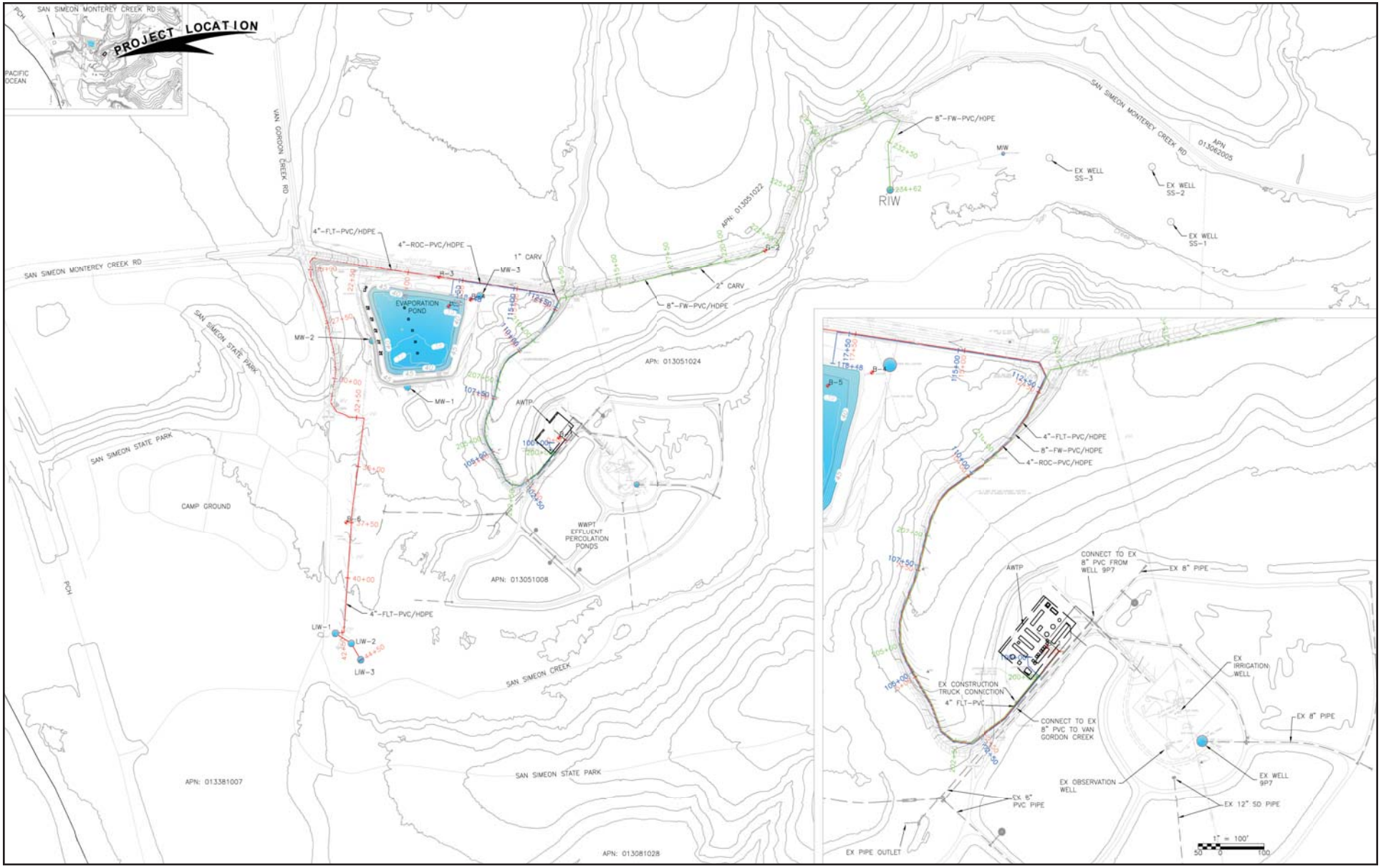

Source: CDM Smith, June 2014.

CAMBRIA EMERGENCY WATER SUPPLY PROJECT
INITIAL STUDY/MITIGATED NEGATIVE DECLARATION

Conveyance Piping Plan

RBF CONSULTING A Baker Company

06/14 • JN 141290

Exhibit 2-11

2.5.6 LAGOON INJECTION WELLS (LIWS)

In order to maintain and improve fresh water conditions in the San Simeon lagoon, AWTP product water would be pumped and discharged into Van Gordon Creek at 100 gpm via three LIWs. For this purpose, a new product water pipeline may be routed to the LIWs, or the existing discharge piping of Well 9P7 may be utilized to discharge to Van Gordon Creek adjacent to the AWTP. For the option utilizing LIWs, the MF treated side stream water would be conveyed using an on-grade laid pipeline to the shallow LIWs. The LIWs would be installed north of San Simeon Creek and on the west bank of the Van Gordon Creek.

The LIWs would be approximately 40 feet deep and constructed of 6-inch diameter PVC well casing and mill slot screen with 0.04-inch wide slot openings. They would be screened from approximately 30 to 40 feet bgs. It is anticipated that between 25 and 33 gpm would be injected into each well.

The lagoon injection wellhead facilities are proposed above grade. Wellhead facilities would include steel pipe, control valve to control the flow into the injection well, a flow meter to measure the flow, and isolation valves for removal of above ground equipment. No pumps or noise generating equipment are proposed at the LIWs. A small control panel would be provided at the wellhead.

2.5.7 PROJECT OPERATIONS

Operating and maintaining the equipment would not require onsite full-time staff, since the AWTP would be designed to operate automatically with no operators onsite. However, up to two employees would visit the site daily to visually inspect and maintain the AWTP. The AWTP operation information would be connected to CCSD's WWTP control room for off-site monitoring and control. Because the AWTP will be more expensive to operate than the current use of groundwater wells, it is anticipated that the Project may not operate during wet or normal rainfall periods. During such periods of inactivity, the AWTP would be maintained in a ready state, which may include routinely exercising equipment and valves, as well as pickling of the RO elements.

2.6 PROJECT CONSTRUCTION AND PHASING

This Project proposed a design-build construction delivery method, which includes construction and installation of the proposed facilities described above. Construction activities include grading, trenching and excavation, as well as installation of equipment on structural footings and concrete housekeeping pads. The Project would be constructed within existing CCSD boundaries.

Approximately 50 yards of cut and 50 yards of fill would be generated during construction of the proposed wells and AWTP. Additionally, installation of the impermeable liner at Van Gordon Reservoir would require removal of vegetation. Additionally, no excavation would be necessary for the proposed pipelines, since they would be above ground.

Exhibit 2-12, *Construction Laydown/Staging Areas*, shows the locations of the proposed construction laydown/staging areas. As shown, the laydown/staging areas would be located in the northern and western portions of the Project site, adjacent to the proposed water facilities.

CONSTRUCTION TIME AND HOURS

As discussed in Section 2.2.1 above, the County issued an Emergency CDP on May 15, 2014, authorizing construction and operation of the proposed emergency Project, subject to various conditions. Construction of the emergency Project began on May 22, 2014. As of the writing of this Initial Study, RIW and MIW have been constructed.

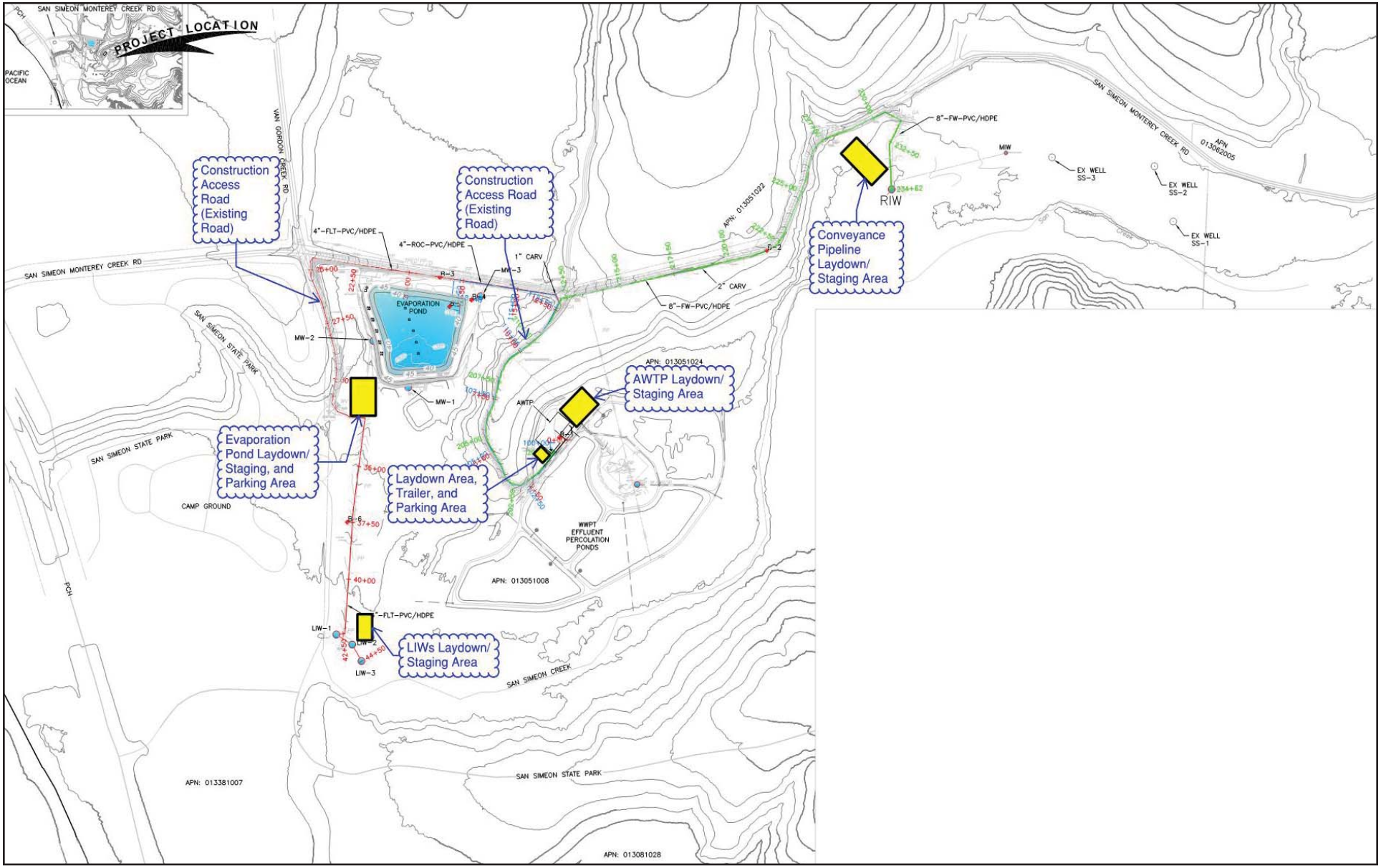

Source: CDM Smith, June 2014.

NOT TO SCALE

RBF CONSULTING A Baker Company

06/14 • JN 141290

CAMBRIA EMERGENCY WATER SUPPLY PROJECT
INITIAL STUDY/MITIGATED NEGATIVE DECLARATION

Construction Laydown/Staging Areas

Exhibit 2-12

Emergency CDP Condition 5 requires the construction work to be completed within 180 days from issuance of the Emergency CDP. The estimated construction period is six months, from May 15, 2014 to November 14, 2014. Construction work times would be 7:00 a.m. to 5:00 p.m. Mondays to Fridays, and 8:00 a.m. to 5:00 p.m. Saturdays, as permitted by CZLUO Section 23.06.042.

2.7 PROJECT APPROVALS

The Project would require the following approvals, among others:

- Cambria Community Services District Board of Directors:
  - Public Hearing and Adoption of IS/MND.

- County of San Luis Obispo:
  - Regular Coastal Development Permit;
  - Grading Permit;
  - Single-Trip Transportation Permit; and
  - Encroachment Permit.

- Other public agencies whose approval may be required:
  - San Luis Obispo County Air Pollution Control District (Rule 202 Permits);
  - Regional Water Quality Control Board Title 27 Permit and Waste Discharge Requirements; and
  - California Department of Public Health, Drinking Water Division Title 22 - Ground Water Recharge Findings of Facts and Conditions Clearance.

3.0 INITIAL STUDY CHECKLIST

3.1 BACKGROUND

1.	**Project Title:** Cambria Emergency Water Supply Project
2.	**Lead Agency Name and Address:** Cambria Community Services District (CCSD) 1316 Tamson Drive, Suite 201 Cambria, California 9342
3.	**Contact Person and Phone Number:** Mr. Robert C. Gresens, P.E. Tel.: 805.927.6223 Fax: 805.927.5584
4.	**Project Location:** 990 San Simeon Creek Road, Cambria
5.	**Project Sponsor's Name and Address:** Cambria Community Services District 1316 Tamson Drive, Suite 201 Cambria, California 934284
6.	**General Plan Designation:** Land Use Category: • Agriculture (AG) Combining Designations: • Local Coastal Program (LCP); • Geologic Study Area (GSA); • San Simeon Creek Flood Hazard (FH); • Sensitive Resource Area (SRA); • Environmentally Sensitive Habitat, Terrestrial Habitat (ESH-TH); and • Environmentally Sensitive Habitat, Coastal Creeks (ESH-CC).
7.	**Zoning:** Refer to Item 6 above.
8.	**Description of the Project:** Refer to Section 2.5, *Project Characteristics*.
9.	**Surrounding Land Uses and Setting:** Refer to Section 2.3.2, *Surrounding Land Uses*.
10.	**Other public agencies whose approval is required (e.g., permits, financing approval or participation agreement).** • Cambria Community Services District; • County of San Luis Obispo; • San Luis Obispo County Air Pollution Control District; • Regional Water Quality Control Board; and • California Department of Public Health, Drinking Water Division.

3.2 ENVIRONMENTAL FACTORS POTENTIALLY AFFECTED

The environmental factors checked below would be potentially affected by this project, involving at least one impact that is "Less Than Significant Impact With Mitigation Incorporated," as indicated by the Initial Study Checklist questions in Section 4.1 through Section 4.18.

✓	Aesthetics		Land Use and Planning
	Agriculture and Forestry Resources		Mineral Resources
✓	Air Quality	✓	Noise
✓	Biological Resources		Population and Housing
✓	Cultural Resources		Public Services
	Geology and Soils		Recreation
	Greenhouse Gas Emissions		Transportation/Traffic
	Hazards and Hazardous Materials	✓	Utilities and Service Systems
	Hydrology and Water Quality	✓	Mandatory Findings of Significance

4.0 ENVIRONMENTAL ANALYSIS

ENVIRONMENTAL IMPACTS

Sections 4.1 through 4.18, which address the environmental issue areas outlined below, analyze the potential environmental impacts resulting from the proposed Project.

- Aesthetics;
- Agriculture and Forestry Resources;
- Air Quality;
- Biological Resources
- Cultural Resources;
- Geology and Soils;
- Greenhouse Gas Emissions;
- Hazards and Hazardous Materials;
- Hydrology and Water Quality;
- Land Use and Planning;
- Mineral Resources;
- Noise;
- Population and Housing;
- Public Services;
- Recreation;
- Transportation/Traffic;
- Utilities and Service Systems; and
- Mandatory Findings of Significance.

The environmental analysis in Sections 4.1 through 4.18 is patterned after the Initial Study Checklist recommended by the *CEQA Guidelines* and used by the CCSD in its environmental review process. For the preliminary environmental assessment undertaken as part of this Initial Study's preparation, a determination that there is a potential for significant effects indicates the need to more fully analyze the Project's impacts and to identify mitigation.

For the evaluation of potential impacts, the questions in the Initial Study Checklist are stated and an answer is provided according to the analysis undertaken as part of the Initial Study. The analysis considers the Project's long-term, direct, indirect, and cumulative impacts. To each question, there are four possible responses:

- *No Impact*. The Project will not have any measurable environmental impact on the environment.

- *Less Than Significant Impact*. The Project will have the potential for impacting the environment, although this impact will be below established thresholds that are considered to be significant.

- *Less Than Significant With Mitigation Incorporated*. The Project will have the potential to generate impacts which may be considered as a significant effect on the environment, although mitigation measures or changes to the Project's physical or operational characteristics can reduce these impacts to levels that are less than significant.

- *Potentially Significant Impact*. The Project will have impacts which are considered significant, and additional analysis is required to identify mitigation measures that could reduce these impacts to less than significant levels.

EXISTING REGULATIONS

The existing regulations presented in Sections 4.1 through 4.18 involves compliance with the established local, state, and federal regulatory framework, which includes San Luis Obispo County's Local Coastal Program (LCP) and Coastal Zone Land Use Ordinance, as described below.

LOCAL COASTAL PROGRAM COMPLIANCE

The San Luis Obispo County Local Coastal Program (LCP) is a four-part program that is intended to manage and protect the coastal zone, and ensure compliance with the California Coastal Act. The LCP is comprised of four key documents: Area Plans; Framework for Planning; Coastal Plan Policies; and Coastal Zone Land Use Ordinance.

Local Coastal Program Policy Document

The LCP Policy Document is part of the County's LCP and Land Use Element. Many of its policies include programs and standards. Some of the policies have been implemented in the Coastal Zone Land Use Ordinance (CZLUO) and planning areas standards. The LCP policies relative to the Project are presented under each environmental issue area.

North Coast Area Plan

Key provisions found in Area Plans are land use maps, programs, and standards guiding development. The County's Coastal Zone is divided into four planning areas- the Project site is located in the North Coast (NC) Planning Area, within the Rural North Coast (RNC) community. The NC Planning Area is addressed in the North Coast Area Plan (NCAP). NCAP Chapter 7 contains standards for the NC Planning Area that are mandatory requirements for development. The Planning Area standards (Areawide and Combining Designation) apply to the planning and development of new land uses, and must be satisfied before a new land use permit is approved. The Areawide and Combining Designation standards relative to the Project are presented below.

Coastal Zone Framework for Planning

This document provides designations, descriptions of land use types, and density of dwellings-per-acre allowed in mapped land use categories.

Coastal Zone Land Use Ordinance

Title 23 of the San Luis Obispo County Code is known as the Coastal Zone Land Use Ordinance (CZLUO). These regulations were adopted to protect and promote the public health, safety, and welfare, and to: minimize adverse effects on the public resulting from the inappropriate creation, location, use or design of building sites, buildings, land uses, parking areas, or other forms of land development by providing appropriate standards for development; and protect and enhance the significant natural, historic, archeological and scenic resources within the County as identified by the County General Plan, among other objectives.

MITIGATION MEASURES

In addition to the established regulatory framework described above, this Initial Study recommends feasible mitigation measures to minimize significant adverse impacts, where potential impacts are anticipated to be significant. Mitigation measures are not required for effects which are not found to be significant. The recommended mitigation measures are required to be: fully enforceable through permit conditions, agreements, or other legally binding instruments; consistent with all applicable constitutional requirements (there must be an essential nexus (i.e., connection) between the mitigation measure and a legitimate governmental interest); and "roughly proportional" to the Project impacts.

4.1 AESTHETICS

Would the project:	Potentially Significant Impact	Less Than Significant With Mitigation Incorporated	Less Than Significant Impact	No Impact
a. Have a substantial adverse effect on a scenic vista?			✓	
b. Substantially damage scenic resources, including, but not limited to, trees, rock outcroppings, and historic buildings within a state scenic highway?				✓
c. Substantially degrade the existing visual character or quality of the site and its surroundings?		✓		
d. Create a new source of substantial light or glare, which would adversely affect day or nighttime views in the area?			✓	

IMPACT ANALYSIS

4.1.a Have a substantial adverse effect on a scenic vista?

Less Than Significant Impact. According to the SLO County Conservation and Open Space Element (page 9.1), visual resources consist of open areas, scenic corridors, and the built environment. Open area and scenic corridor visual resources are discussed below. No built environment (urban landscape) is located in the immediate Project vicinity, thus, no visual impact would occur in this regard.

To recognize visual resources with scenic value, the County applies Combining Designations. Portions of the Project site are designated Sensitive Resource Area (SRA), Environmentally Sensitive Habitat, Terrestrial Habitat (ESH-TH), and Environmentally Sensitive Habitat, Coastal Creeks (ESH-CC); see Coastal Zone North Coast Planning Area Rural Combining Designation Map.[1]

Open Areas

The Conservation and Open Space Element (page 9.1) defines open area visual resources as "agricultural and natural, undeveloped lands."

The Coastal Zone North Coast Planning Area Rural Combining Designation Map shows the boundaries of the Project areas designated SRA, ESH-TH, and ESH-CS. The Project site's open areas and features that are considered visual resources involve the San Simeon Creek and Van Gordon Creek corridors (ESH-CS) that traverse the southeastern and western portions of the Project site, respectively. As shown on Exhibit 2-6, *Project Overview*, the Project's areas of disturbance would be located entirely outside of the creek corridors; thus, the Project would not have an adverse visual effect on the creek corridors.

Additional visual resources in the Project's vicinity involve the Monterey pine forest and State Park foot trail situated between the San Simeon Creek corridor and State Park Washburn Primitive Campground, south of the Project site. A minimal portion of the Project site's southwestern corner is designated SRA and ESH-TH to recognize these visual resources. However, the forest and trail do not extend onto the site's southwestern corner. Additionally, due to topographical variations and the San Simeon Creek corridor vegetation, the proposed water facilities would not be visible from the Washburn Primitive Campground sites, which are located south of the Project site. Therefore, the

[1] County of San Luis Obispo Website, http://www.slocounty.ca.gov/planning/zoning/Map_Image_Download_Center/Land_Use_Maps.htm, Accessed May 15, 2014.

Project would not have an adverse visual effect on the Monterey pine forest and State Park foot trail located to the south.

The small stand of Monterey pine that is located on the Project site (where existing Well 9P7 is located) is isolated and does not form part of the ESH-TH-designated Monterey pine forest to the south. The Project proposes to utilize Well 9P7 as the advanced water treatment plant (AWTP) source water well. No Monterey pine would be removed to implement this improvement. Given the scale and nature of the proposed improvements to Well 9P7, and since no Monterey pine would be removed, the Project would not have an adverse visual effect on this isolated stand.

The San Simeon well field, percolation pond system, and percolation pond (Van Gordon Reservoir) where the Project proposes new facilities contain ruderal vegetation, which is not considered a unique or attractive landscape feature, and not within the boundaries of the designated SRA, ESH-TH, and ESH-CS.

The Pacific Ocean coastline is located approximately 0.30 mile west of the Project site. Due to topographical changes and intervening vegetation, the Project would not be visible from the ocean or scenic coastal areas. Therefore, the Project would not have an adverse effect on a scenic vista.

Scenic Corridors

The COSE (page 9.1) defines scenic corridors as areas that have scenic or historic qualities that are visible from recognized roadways. Scenic corridors are further defined (COSE page 9.3) as view areas, or "viewsheds" from popular public roads and highways that have unique or outstanding scenic qualities. There are no popular public roads or highways located in the Project's immediate vicinity. Highway 1, which is designated an All-American Road (San Luis Obispo North Coast Byway - Route 1) and a State Scenic Highway (Route 1 Scenic Highway), is located approximately 0.2 mile west of the Project site. Due to topographical changes and intervening vegetation, the Project would not be visible from Highway 1. San Simeon - Monterey Creek Road and Van Gordon Creek Road, which form the Project site's northern and western boundaries, are remote rural roads. The topographical variations and vegetation that align the roadways would also partially screen motorists' views of the Project. Therefore, the Project would not have an adverse effect on a scenic corridor or views from adjacent roads.

Overall, the Project is consistent with the relevant LCP Policies (see *Existing Regulations* Section below) that address protection and preservation of visual and scenic resources: unique/attractive features of the landscape are preserved (LCP 1); views to/along the ocean and scenic coastal areas are not impacted (LCP 2); public view [popular public road] corridors are not impacted (LCP 4); and Monterey pine trees would not be removed (LCP 7). The Project is consistent with NCAP Standard AW-6, since it would not be visible from Highway 1. Finally, because the Project would not be visible from the shoreline, public beaches, the Morro Bay estuary, or any of the roads specified in the NCAP for Critical Viewsheds, Scenic Corridors, or SRA's, the Project would be exempt from Coastal Zone Land Use Ordinance (CZLUO) Section 23.04.210, *Visual Resources*; see CZLUO Section 23.04.210a.

EXISTING REGULATIONS

Local Coastal Program Policies:

Visual and Scenic Resources

LCP 1 Protection of Visual and Scenic Resources. Unique and attractive features of the landscape, including but not limited to unusual landforms, scenic vistas and sensitive habitats are to be preserved protected, and in visually degraded areas restored where feasible.

LCP 2 Site Selection for New Development. Permitted development shall be sited so as to protect views to and along the ocean and scenic coastal areas. Wherever possible, site selection for new development is to emphasize locations not visible from major public view corridors….

LCP 4 New Development in Rural Areas. New development shall be sited to minimize its visibility from public view corridors. Structures shall be designed (height, bulk, style) to be subordinate to, and blend with, the rural character of the area. New development which cannot be sited outside of public view corridors is to be screened utilizing native vegetation; however, such vegetation, when mature, must also be selected and sited in such a manner as to not obstruct major public views. New land divisions whose only building site would be on a highly visible slope or ridgetop shall be prohibited.

LCP 7 Preservation of Trees and Native Vegetation. The location and design of new development shall minimize the need for tree removal. When trees must be removed to accommodate new development or because they are determined to be a safety hazard, the site is to be replanted with similar species or other species which are reflective of the community character.

North Coast Area Plan Standards:

Site Design and Building Construction

AW-6 Site Selection. Primary site selection for new development shall be locations not visible from Highway 1 as follows:

a. Sites shall be selected where hills and slopes would shield development unless no alternative location exists or the new development provides visitor-serving facilities.

b. New development shall be located so that no portion of a structure extends above the highest horizon line of ridgelines as seen from Highway 1.

MITIGATION MEASURES

No mitigation is required.

4.1.b Substantially damage scenic resources, including, but not limited to, trees, rock outcroppings, and historic buildings within a state scenic highway?

No Impact. The Project site is not located within a State scenic highway. Therefore, the Project would not substantially damage scenic resources within a State scenic highway.

MITIGATION MEASURES

No mitigation is required.

4.1.c Substantially degrade the existing visual character or quality of the site and its surroundings?

Less Than Significant With Mitigation Incorporated. The Project site contains various water facilities including the San Simeon well field, a percolation pond system, and an effluent storage reservoir; see Exhibit 2-3, *Existing Site Conditions*. As shown on Exhibit 2-3, the Project site's existing visual character is dominated by natural undeveloped lands, which are comprised primarily of ruderal vegetation, some willow riparian forest, and the percolation pond system and reservoir. The single stand of Monterey Pine that exists on the Project site contributes only nominally to the site's visual character. Areas to the north and east of the Project site are characterized by

undulating hillsides with undeveloped lands used for agriculture. Areas to the south and west of the Project site involve natural undeveloped lands and recreational areas that are characterized by willow riparian forest within the creek corridor and ruderal vegetation within and surrounding the campgrounds.

A project is generally considered to have a significant visual/aesthetic impact if it substantially changes the character of a project site such that it becomes visually incompatible or visually unexpected when viewed in the context of its surroundings. Such changes would degrade the existing visual character or quality of the site and its surroundings.

Short-Term Impacts

Short-term construction-related activities associated with Project construction would temporarily alter the Project site's visual character. Construction materials/equipment would be staged at various locations throughout the site, depending on the component under construction; see Exhibit 2-12, *Construction Laydown/Staging Areas*. The "window" of construction-related activities at the Project site would be approximately 180 days.

Construction activities would not be visible from most of San Simeon Creek Campground's camp sites, which are located west of the Project site. The Campground's northeastern most camp sites (Nos. 18, 19, 21, 23, and 24) would have intermittent/partial views of construction activities associated with the evaporation pond and LIWs, temporarily degrading the site's visual character. With implementation of Mitigation Measure AES-1, which addresses construction staging areas and routine maintenance, impacts in this regard would be less than significant. Additionally, due to intervening vegetation, the Campground's easternmost camp sites would not have views of the AWTP or RIW occurring east of the Van Gordon Creek corridor.

Construction activities would not be visible from any Washburn Primitive Campground sites, which are located south of the Project site, due to topographical variations and the San Simeon Creek corridor vegetation.

Therefore, given the short duration (approximately 180 days) of construction activities and the limited construction activities that would occur just east of the San Simeon Creek Campground, with Mitigation Measure AES-1 incorporated, the Project's construction activities would not substantially degrade the existing visual character or quality of the site and its surroundings. A less than significant impact would occur in this regard.

Long-Term Impacts

The Project proposes water facilities as described in Section 2-5, *Project Characteristics*, and shown on Exhibit 2-6. The proposed water facilities, which would be located entirely within the existing public utility facilities site, would be of varying heights and scales:

- *Pipelines:* Three above-grade pipelines are proposed at a maximum height of 12 inches;
- *Wells:* Similar to existing Well 9P7 (see Exhibit 2-4, *Existing Well 9P7*), four injection and four monitoring wells are proposed at a maximum height of 3.0 feet;
- *Advanced Water Treatment Plant (AWTP):* An AWTP (approximately 100 by 170 feet) is proposed at a maximum height of 15 feet;
- *Impermeable Liner:* An impermeable liner is proposed within the evaporation pond; and
- *Mechanical Spray Evaporators:* Five mechanical spray evaporators within sound enclosures (three sides) are proposed along the pond's west berm, each approximately 13 by 13 feet, at a maximum height of 12.6 feet; see Exhibit 2-10, *Spray Evaporator*).

Additionally, two overhead power drops (lines) are proposed along Van Gordon Creek Road and along the well access road.

The Project would not substantially change the character of the Project site such that it becomes visually incompatible or visually unexpected when viewed in the context of the existing CCSD public utility site where the proposed facilities would be located. The San Simeon Creek Campground's northeastern most camp sites would have intermittent/partial views of the power drop along the well access road and the evaporation pond, similar to existing views. These camp sites would also have intermittent/partial views of the spray evaporators, which are proposed along the western berm. With implementation of Mitigation Measure AES-2, which requires that: areas of the site where native vegetation was removed and where water facilities would not be located, be revegetated with indigenous plants to minimize changes in visual character; and vegetation comprised of indigenous plants be provided along the Project site's western boundary to screen the proposed Project facilities from campground views and minimize changes in visual character, impacts in this regard would be less than significant.

Due to topographical changes and intervening vegetation, the northeastern most camp sites would not have views of the proposed LIWs. Additionally, the proposed water facilities would not be visible from any Washburn Primitive Campground sites, which are located south of the Project site, due to topographical variations and the San Simeon Creek corridor vegetation. Therefore, no impacts involving long-term visual character would occur in this regard.

Overall, the Project is consistent with the relevant LCP Policies that address visual character: unique/attractive features of the landscape are preserved (LCP 1); structures would be designed (height, bulk, style) to be subordinate to, and blend with, the rural character of the area (through compliance with CZLUO Chapter 23.04, see below); and Monterey pine trees would not be removed (LCP 7). The Project is subject to compliance with CZLUO Chapter 23.04, *Site Design Standards*, which establishes standards for the design and layout of sites for land uses. The purpose of these standards is to support, through careful site evaluation and design, the establishment of land uses in a manner that is compatible with existing land uses and neighborhoods, and the natural environment. Site development standards, including minimum site area, setbacks, heights, and fencing/screening, that are relevant to visual resources are specified. Following compliance with the County's regulatory requirements, the Project would not substantially degrade the visual character or quality of the site and its surroundings.

EXISTING REGULATIONS

Local Coastal Program Policies: See LCP Policies 1, 4, and 7 above.

Coastal Zone Land Use Ordinance Standards:

CZLUO Chapter 23.04 (Site Design Standards). This Chapter establishes standards for the design and layout of sites for land uses. The purpose of these standards is to support, through careful site evaluation and design, the establishment of land uses in a manner that is compatible with existing land uses and neighborhoods, and the natural environment. Standards are provided for the following site development features that are relevant to visual resources:

- Parcel size;
- Minimum site area;
- Setbacks;
- Heights; and
- Fencing and screening.

MITIGATION MEASURES

AES-1 Prior to Grading Permit issuance, the CCSD shall confirm that the plans and specifications stipulate that, Project construction shall implement standard practices to minimize potential adverse impacts to the site's visual character, including the following:

- Construction staging areas shall be located as far as practicable from sensitive receptors; and
- Construction areas shall receive appropriate routine maintenance to minimize unnecessary debris piles.

AES-2 Prior to Grading Permit issuance: areas of the site where native vegetation has been removed and where water facilities are not proposed, shall be revegetated with indigenous plants; and vegetation comprised of indigenous plants shall be provided along the Project site's western boundary to screen the proposed water facilities from San Simeon Creek Campground view (northeastern most camp sites 18, 19, 21, 23, and 24). Prior to revegetation and new vegetation, a Landscape Plan (for the areas of revegetation and along the site's western boundary) shall be prepared for review and approval by the County.

4.1.d Create a new source of substantial light or glare which would adversely affect day or nighttime views in the area?

Less Than Significant Impact. There are two primary sources of light: light emanating from building interiors that pass through windows and light from exterior sources (i.e., street lighting, parking lot lighting, building illumination, security lighting, and landscape lighting). Depending upon the location of the light source and its proximity to adjacent light sensitive uses, light introduction can be a nuisance, affecting adjacent areas and diminishing the view of the clear night sky. Lighting associated with non-residential uses may cause spillover impacts to nearby sensitive receptors.

Light and glare are not currently being emitted from the Project site. Nighttime construction would not be required and the construction equipment would not create a substantial source of daytime light or glare.

The Project would include lighting features at the AWTP and spray evaporators solely for security purposes. The nearest light sensitive receptors to the Project site are the State Park recreational uses to the south and west. Lighting introduced by the Project is not anticipated to cause significant spillover impacts to these receptors, due to the distance that exists between the AWTP and evaporators and these existing uses, and the intervening vegetation. Further, the Project would be subject to compliance with CZLUO Section 23.04.320 (Outdoor Lights), which establishes standards for all outdoor night-lighting sources. Compliance with NCAP CW Standard 13 (*Exterior Lighting*) would further minimize potential impacts in this regard. Following compliance with County requirements, the Project would result in less than significant light and glare impacts.

EXISTING REGULATIONS

Coastal Zone Land Use Ordinance Standards:

CZLUO Section 23.04.320 (Outdoor Lights). This Section establishes standards relative to the following lighting features that are applicable to all outdoor night-lighting sources:

- Illumination;
- Light directed onto lot;
- Minimization of light intensity;
- Light sources to be shielded;
- Ground illuminating lights;
- Elevated feature illumination;
- Height of light fixtures; and
- Street lighting.

MITIGATION MEASURES

No mitigation is required.

4.2 AGRICULTURE AND FORESTRY RESOURCES

In determining whether impacts to agricultural resources are significant environmental effects, lead agencies may refer to the California Agricultural Land Evaluation and Site Assessment Model (1997) prepared by the California Department of Conservation as an optional model to use in assessing impacts on agriculture and farmland. In determining whether impacts to forest resources, including timberland, are significant environmental effects, lead agencies may refer to information compiled by the California Department of Forestry and Fire Protection regarding the state's inventory of forest land, including the Forest and Range Assessment Project and the Forest Legacy Assessment project; and forest carbon measurement methodology provided in Forest Protocols adopted by the California Air Resources Board. Would the project:	**Potentially Significant Impact**	**Less Than Significant With Mitigation Incorporated**	**Less Than Significant Impact**	**No Impact**
a. Convert Prime Farmland, Unique Farmland, or Farmland of Statewide Importance (Farmland), as shown on the maps prepared pursuant to the Farmland Mapping and Monitoring Program of the California Resources Agency, to non-agricultural use?			✓	
b. Conflict with existing zoning for agricultural use, or a Williamson Act contract?			✓	
c. Conflict with existing zoning for, or cause rezoning of, forest land (as defined in Public Resources Code section 12220(g)), timberland (as defined by Public Resources Code section 4526), or timberland zoned Timberland Production (as defined by Government Code section 51104(g))?				✓
d. Result in the loss of forest land or conversion of forest land to non-forest use?				✓
e. Involve other changes in the existing environment, which, due to their location or nature, could result in conversion of Farmland, to non-agricultural use or conversion of forest land to non-forest use?				✓

IMPACT ANALYSIS

4.2.a Convert Prime Farmland, Unique Farmland, or Farmland of Statewide Importance (Farmland), as shown on the maps prepared pursuant to the Farmland Mapping and Monitoring Program of the California Resources Agency, to non-agricultural use?

Less Than Significant Impact. The SLO County Prime Farmland Map[1] depicts areas of land according to their land use capability classifications and indicates the Project site is classified Prime and Non-Prime Agricultural Soils, including Class I, II, and III soils. The SLO County General Plan Agriculture Element (Appendix F, *Glossary* (page F-2)) defines Non-Prime Agricultural Soils as "areas of land that do not contain prime agricultural soils but are classified in the Agriculture land use category by the Land Use Element." Prime Coastal Zone Agricultural Soils are defined as "all land which qualifies for rating as Class I or II in the Natural Resources Conservation Service land use capability classifications." However, the Project site is not currently in agricultural use. The site has been in public utility use,

[1] County of San Luis Obispo Website, http://www.slocounty.ca.gov/planning/zoning/Map_Image_Download_Center/Natural_Resources_Maps.htm, Accessed May 16, 2014.

since the CCSD constructed its San Simeon well field in 1979 and percolation pond system in 1994.[2] The site's existing water facilities are shown on Exhibit 2-3, *Existing Site Conditions*, and described in Section 2.3.1, *On-Site Land Uses*. Therefore, the Project would not convert farmland to non-agricultural use.

MITIGATION MEASURES

No mitigation is required.

4.2.b Conflict with existing zoning for agricultural use, or a Williamson Act contract?

Less Than Significant Impact. The Project site is designated Agriculture (AG). However, the Project would not conflict with the site's existing AG zoning, since Public Utility Facilities[3] are allowable uses in AG-designated sites, according to Coastal Table O. Additionally, the proposed water facilities would be constructed within an existing CCSD public utility site. Further, the AG-designated areas outside of the Project site would not be disturbed, and the Project site is not under a Williamson Act contract. Therefore, the Project would not conflict with existing zoning for agricultural use or a Williamson Act contract.

MITIGATION MEASURES

No mitigation is required.

4.2.c Conflict with existing zoning for, or cause rezoning of, forest land (as defined in Public Resources Code section 12220(g)), timberland (as defined by Public Resources Code section 4526), or timberland zoned Timberland Production (as defined by Government Code section 51104(g))?

No Impact. The Project site is designated Agriculture (AG). Therefore, the Project would not conflict with existing zoning for, or cause rezoning of, forest land or timberland.

MITIGATION MEASURES

No mitigation is required.

4.2.d Result in the loss of forest land or conversion of forest land to non-forest use?

No Impact. The Project site is not currently, nor has been in the past, in forest use. The site contains various water facilities; see Exhibit 2-3 and Section 2.3.1. Therefore, the Project would not result in the loss of forest land or conversion of forest land to non-forest use.

MITIGATION MEASURES

No mitigation is required.

[2] Written Communication: Robert C. Gresens, P.E., District Engineer, Cambria Community Services District, June 5, 2014.

[3] Public Utility Facilities [J5] include public water system wells, treatment plants, and storage, and community wastewater treatment plants, settling ponds, and disposal fields, among other (see Coastal Zone Framework for Planning Excerpts Land Use Definitions).

4.2.e Involve other changes in the existing environment, which, due to their location or nature, could result in conversion of Farmland, to non-agricultural use or conversion of forest land to non-forest use?

No Impact. Agricultural uses are located north and east of the Project site, and a Monterey pine forest is located south of the site, beyond the San Simeon Creek corridor. However, the Project involves construction of water facilities entirely within an existing public utility facility site. Therefore, the Project would not involve other changes in the existing environment which, could result in conversion of Farmland, to non-agricultural use or conversion of forest land to non-forest use.

MITIGATION MEASURES

No mitigation is required.

This page intentionally left blank.

4.3 AIR QUALITY

Where available, the significance criteria established by the applicable air quality management or air pollution control district may be relied upon to make the following determinations. Would the project:	**Potentially Significant Impact**	**Less Than Significant With Mitigation Incorporated**	**Less Than Significant Impact**	**No Impact**
a. Conflict with or obstruct implementation of the applicable air quality plan?			✓	
b. Violate any air quality standard or contribute substantially to an existing or projected air quality violation?		✓		
c. Result in a cumulatively considerable net increase of any criteria pollutant for which the project region is non-attainment under an applicable federal or state ambient air quality standard (including releasing emissions which exceed quantitative thresholds for ozone precursors)?		✓		
d. Expose sensitive receptors to substantial pollutant concentrations?		✓		
e. Create objectionable odors affecting a substantial number of people?			✓	

INTRODUCTION

The Project site is located within the South Central Coast Air Basin (Basin), and is under the jurisdiction of the San Luis Obispo County Air Pollution Control District (SLOAPCD). SLOAPCD's current guidelines and emission thresholds established in the *CEQA Air Quality Handbook* (CEQA Handbook) (updated April 2012) were adhered to in the assessment of the Project's air quality impacts.

Both the State of California and the Federal government have established health-based Ambient Air Quality Standards (AAQS) for six criteria air pollutants:

- Carbon monoxide (CO);
- Ozone (O_3);
- Nitrogen oxides (NO_X);
- Sulfur oxides (SO_X);
- Particulate matter less than 10 and 2.5 microns in diameter (PM_{10} and $PM_{2.5}$, respectively); and
- Lead (Pb).

Ozone is formed by a photochemical reaction between NO_X and reactive organic gasses (ROGs). Thus, impacts from O_3 are assessed by evaluating impacts from NO_X and ROGs.

Table 4.3-1, *Construction Air Emissions Thresholds*, presents the SLOAPCD significance thresholds for construction emissions that have been established by the CEQA Handbook. Mitigation of construction activities is required when the emission thresholds are equaled or exceeded by fugitive and/or combustion emissions.

Table 4.3-1
Construction Air Emissions Thresholds

Pollutant	Threshold[1]		
	Daily[3]	Quarterly Tier 1[4]	Quarterly Tier 2[5]
ROG + NO_X (combined)	137 lbs	2.5 tons	6.3 tons
Diesel Particulate Matter	7 lbs	0.13 tons	0.32 tons
Fugitive Particulate Matter (PM_{10}), Dust[2]	-	2.5 tons[5]	-

Notes:
1. Daily and quarterly emission thresholds are based on the California Health & Safety Code and the CARB Carl Moyer Guidelines.
2. Any project with a grading area greater than 4.0 acres of continuously worked area will exceed the 2.5 ton PM_{10} quarterly threshold
3. For construction projects expected to be completed in less than one quarter (90 days) exceedance of the daily thresholds requires standard mitigation measures.
4. For construction projects lasting more than one quarter, exceedance of Quarterly Tier 1 thresholds requires standard mitigation measures, Best Available Control Technology (BACT) for construction equipment. If implementation of standard mitigation and BACT measures cannot bring the Project below thresholds, off-site mitigation may be necessary.
5. For construction projects lasting more than one quarter, exceedance of Quarterly Tier 2 threshold requires the implementation of Construction Activity Management Plan (CAMP) in addition to Tier 1 requirements.

Source: SLOAPCD, *CEQA Air Quality Handbook,* April 2012.

The threshold criteria established by the SLOAPCD to determine the significance level for long-term operational emissions from a project are presented in Table 4.3-2, *Operational Air Emissions Thresholds*.

Table 4.3-2
Operational Air Emissions Thresholds

Pollutant	Threshold[1]	
	Daily	Annual
ROG + NO_x (combined)[2]	25 lbs	25 tons
Diesel Particulate Matter[2]	1.25 lbs	-
Fugitive Particulate Matter (PM_{10}), Dust[2]	25 lbs	25 tons
CO	550 lbs	-

Notes:
1. Daily and annual emission thresholds are based on the California Health & Safety Code Division 26, Part 3, Chapter 10, Section 40918 and the CARB Carl Moyer Guidelines for Diesel Particulate Matter.
2. CalEEmod – Use winter operational emission data to compare to operational thresholds.

Source: SLOAPCD, *CEQA Air Quality Handbook,* April 2012.

IMPACT ANALYSIS

4.3.a Conflict with or obstruct implementation of the applicable air quality plan?

Less Than Significant Impact. The purpose of a consistency finding is to determine whether a project is inconsistent with the assumptions and objectives of regional air quality plans, and thus whether it would interfere with the region's ability to comply with Federal and State Ambient Air Quality Standards (AAQS). Therefore, it is

necessary to assess the proposed Project's consistency with the land use and transportation control measures and strategies outlined in the Clean Air Plan (CAP) for the Basin. If the project is consistent with these measures, the project is considered consistent with the CAP. Assumptions programmed within the CAP are based on the growth assumptions and land use designations in local general plans. Therefore, consistency with the CAP is analyzed in regard to the Project's consistency with the *County of San Luis Obispo General Plan*.

San Luis Obispo County (County) is classified as a State and Federal attainment area for CO and $PM_{2.5}$. The County is also classified as a Federal attainment area for ozone and PM_{10}. However, the Project site is located within a classified State non-attainment area for ozone and PM_{10}. The Project would generate short-term construction emissions from stationary and mobile equipment, typical of infrastructure construction projects. However, standard emission control measures would be implemented, in order to minimize such emissions to below a level of significance. Short-term construction emissions are further addressed under Response 4.3.b, below. Construction-related emissions would cease following completion of Project construction activities. The Project does not involve amendments to the County's General Plan, or conflict with the CAP assumptions regarding growth and long-term air quality. Additionally, the Project would not generate a significant increase in pollutant emissions due to additional vehicular traffic or stationary sources (operational emissions). Therefore, due to the Project's nature and scope, the Project would not conflict with or obstruct implementation of the CAP and a less than significant impact would occur in this regard.

MITIGATION MEASURES

No mitigation is required.

4.3.b Violate any air quality standard or contribute substantially to an existing or projected air quality violation?

Less Than Significant With Mitigation Incorporated. The proposed water facilities are described in Section 2.0, *Project Description*. Project construction would include grading, excavation, construction, as well as installation of equipment on structural footings and concrete pads. It is anticipated that only a minimal amount of earthmoving activities would occur due to construction of the proposed water supply facilities. Construction would occur over 180 days. Installation of the leachate collection and removal system (LCRS), and the vadose zone monitoring system at the evaporation pond would require minimal grading, while the installation of the impermeable liner would require removal of the pond's vegetation. Along the evaporation pond's southern berm, an existing spillway would be demolished to provide a uniform slope elevation around the pond. Minimal excavation would be necessary for the proposed Advanced Water Treatment Plant (AWTP), since it would be within a container. Additionally, no excavation would be necessary for the proposed pipelines, since they would be above ground.

Stationary or mobile powered on-site construction equipment would include trucks, excavator, loader, paver, paving equipment, roller, rubber tired dozer, rubber-tired loaders, skid-steer loaders, crane, trencher, and other equipment. Based on the nominal amount of daily work trips required for Project construction, construction worker trips are not anticipated to substantially contribute to or affect traffic flow on local roadways, and are therefore not considered notable emission sources. The analysis of daily construction emissions has been prepared utilizing the California Emissions Estimator Model (CalEEMod) computer model. Refer to Appendix A, Air Quality/Greenhouse Gas Data, for the CalEEMod modeling outputs and results. Table 4.3-3, *Construction Air Emissions*, provides estimates of the short-term construction emissions that are anticipated to occur during the Project's construction phase.

Table 4.3-3
Construction Air Emissions

Pollutant	Pollutant[1]		
	ROG + NO_X (pounds per day)[2]	Diesel Particulate Matter (pounds per day)[2]	Fugitive Particulate Matter (PM_{10}) (tons/quarter-year)[3]
Unmitigated Construction Emissions	82.94	6.954	0.20
Mitigated Construction Emissions	82.94	6.95	0.20
SLOAPCD Threshold	137	7	25
Is Threshold Exceeded?	**No**	**No**	**No**

ROG = reactive organic gas; PM_{10} = fine particulate matter (up to 10 microns in diameter)
NO_X = nitrogen oxides; tons/quarter-year = tons per quarter of a year

1. Emissions calculated using the CalEEMod, as recommended by the San Luis Obispo County Air Pollution Control District (SLOAPCD).
2. Construction would be completed in approximately 92 days. Therefore, the daily threshold was conservatively used.
3. The SLOAPCD does not have a daily threshold for fugitive particulate matter, there for the Quarterly Tier 1 threshold was used.

Fugitive Dust Emissions

Construction activities are a source of fugitive dust emissions that may have a substantial, temporary impact on local air quality. In addition, fugitive dust may be a nuisance to those living and working in the project area. Fugitive dust emissions are associated with land clearing, ground excavation, cut-and-fill, and truck travel on unpaved roadways (including demolition as well as construction activities). Fugitive dust emissions vary substantially from day to day, depending on the level of activity, specific operations, and weather conditions. Fugitive dust from grading, excavation and construction is expected to be short-term and would cease upon project completion. Additionally, most of this material is inert silicates, rather than the complex organic particulates released from combustion sources, which are more harmful to health.

Dust (larger than 10 microns) generated by such activities usually becomes more of a local nuisance than a serious health problem. Of particular health concern is the amount of PM_{10} (particulate matter smaller than 10 microns) generated as a part of fugitive dust emissions. PM_{10} poses a serious health hazard alone or in combination with other pollutants. PM_{10} sources include open fields, roadways, storage piles, earthwork, etc. As depicted in Table 4.3-3, total PM_{10} emissions would not exceed the SLOAPCD thresholds during construction. Therefore, impacts would be less than significant.

Construction Equipment and Worker Vehicle Exhaust

Exhaust emissions from construction activities include emissions associated with the transport of machinery and supplies to and from the project site, emissions produced on-site as the equipment is used, and emissions from trucks transporting materials to/from the site. As presented in Table 4.3-3, construction equipment and worker vehicle exhaust emissions would be below the established SLOAPCD thresholds. Therefore, air quality impacts from equipment and vehicle exhaust emission would be less than significant.

ROG Emissions

In addition to gaseous and particulate emissions, the application of asphalt and surface coatings creates ROG emissions, which are O_3 precursors. The ROG emissions associated with paving and painting have been quantified with CalEEMod. As shown in Table 4.3-3, ROG emissions would be below SLOAPCD thresholds and impacts would be less than significant.

Asbestos

Asbestos is a term used for several types of naturally occurring fibrous minerals that are a human health hazard when airborne. The most common type of asbestos is chrysotile, but other types such as tremolite and actinolite are also found in California. Asbestos is classified as a known human carcinogen by state, federal, and international agencies and was identified as a toxic air contaminant by the California Air Resources Board (CARB) in 1986.

Asbestos can be released from serpentinite and ultramafic rocks when the rock is broken or crushed. At the point of release, the asbestos fibers may become airborne, causing air quality and human health hazards. These rocks have been commonly used for unpaved gravel roads, landscaping, fill projects, and other improvement projects in some localities. Asbestos may be released to the atmosphere due to vehicular traffic on unpaved roads, during grading for development projects, and at quarry operations. All of these activities may have the effect of releasing potentially harmful asbestos into the air. Natural weathering and erosion processes can act on asbestos bearing rock and make it easier for asbestos fibers to become airborne if such rock is disturbed. According to the Department of Conservation Division of Mines and Geology, *A General Location Guide for Ultramafic Rocks in California – Areas More Likely to Contain Naturally Occurring Asbestos Report* (August 2000), serpentinite and ultramafic rocks are not known to occur within the project area. As naturally occurring asbestos is not present at the Project site, there would be no impact in this regard.

Total Daily Construction Emissions

In accordance with the SLOAPCD Guidelines, CalEEMod was utilized to model construction emissions for ROG, NO_X, and PM_{10}. As indicated in Table 4.3-3, impacts would be less than significant for all criteria pollutants during construction. Emissions would be further reduced with implementation of Mitigation Measure AQ-1. Table 4.3-3 indicates that the Project's total daily construction emissions would not exceed the SLOAPCD construction thresholds for ROGs, NO_X, and PM_{10}. Therefore, the Project would result in less than significant construction-related air quality impacts.

Long-Term Operational Emissions

Operation of the proposed emergency water facilities would not result in significant impacts, as this type of facility does not directly emit air pollutants. Power for the AWTP would be obtained from a PG&E supplied pad mount transformer with an estimated capacity of 750 Kilovolt-ampere (kVA) at 480/277 volts. In addition, a 300 kVA at 480/277 volts pad mount transformer and associated components would be installed to supply power to the evaporation pond. It is noted that these facilities would not be considered onsite sources of air pollutants, as they would be electrically powered. Should any backup generators be utilized they would be subject to SLOAPCD Rule 431.

In addition, the Project would not result in long-term mobile-source pollutant emissions. The Project would be designed to operate automatically with no operators on-site. The only trips that would be required would be for periodic inspection and maintenance. Therefore, mobile source emissions generated by Project-related trips would be nominal and would result in less than significant impacts.

EXISTING REGULATIONS

San Luis Obispo Air Pollution Control District Standards:

Rule 202 - Permits

A. General

1. Authority to Construct: Any person building, erecting, altering or replacing any article, machine, equipment or other contrivance, the use of which may cause the issuance of air contaminants or the use of which may eliminate or reduce or control the issuance of air contaminants, shall first obtain authorization for such construction from the Air Pollution Control Officer.

2. Permits to Operate: Before any article, machine, equipment or other contrivance, the use of which may cause, increase, eliminate, reduce or control the issuance of air contaminants may be operated or used, a Permit to Operate shall be obtained from the Control Officer, except as provided in subsection A.5.

Rule 401 – Visible Emissions

A. A person shall not discharge into the atmosphere from any single source of emission whatsoever any air contaminant for a period or periods aggregating more than three minutes in any hour which is:

1. As dark or darker in shade as that designated as No. 1 on the Ringlemann Chart, as published by the United States Bureau of Mines.

2. Of such opacity as to obscure an observer's view to a degree equal to or greater than does smoke described in Subsection A.1 of this Rule.

Rule 402 - Nuisance

A. A person shall not discharge from any source whatsoever such quantities of air contaminants or other material which cause injury, detriment, nuisance or annoyance to any considerable number of persons or to the public, or which endanger the comfort, repose, health or safety of any such persons or the public, or which cause, or have a natural tendency to cause, injury or damage to business or property.

Rule 431 - Stationary Internal Combustion Engines

D. Exemptions: With the exception of recordkeeping and reporting requirements necessary to justify an exemption, the provisions of this Rule shall not apply to the operation of stationary internal combustion engines used under the following conditions: 3) Emergency standby engines operated during either an emergency or maintenance operation. Maintenance operation is limited to 100 hours per calendar year.

G. Recordkeeping: The operator of any engine subject to the provisions of Section D of this Rule shall maintain an inspection log that includes, on a monthly basis the following data:

a. Date and results of each engine inspection;
b. A summary of any preventive or corrective maintenance taken;
c. The total hours of operation;
d. The type and quantity of fuel used; and
e. Any additional information required in the Engine Operator Inspection Plan.

The operator shall maintain the inspection log for a period of three (3) years after the date of each entry. The log shall be available for inspection by the District upon request.

MITIGATION MEASURES

AQ-1 General Air Quality. The following measures shall be incorporated into the construction phase of the Project and shown on all applicable plans:

- Maintain all construction equipment in proper tune according to manufacturer's specifications;
- Fuel all off-road and portable diesel powered equipment, including but not limited to bulldozers, graders, cranes, loaders, scrapers, backhoes, generator sets, compressors, auxiliary power units, with ARB certified motor vehicle diesel fuel (non-taxed version suitable for use off-road); and
- Maximize to the extent feasible, the use of diesel construction equipment meeting the CARB's 1996 or newer certification standard for off-road heavy-duty diesel engines.

Fugitive PM_{10} Mitigation Measures

All required PM_{10} measures shall be shown on applicable grading or construction plans. In addition, the Applicant shall designate personnel to insure compliance and monitor the effectiveness of the required dust control measures (as conditions dictate, monitor duties may be necessary on weekends and holidays to insure compliance); the name and telephone number of the designated monitor(s) shall be provided to the SLOAPCD prior to construction/ grading permit issuance

- Reduce the amount of the disturbed area where possible;
- Use of water trucks or sprinkler systems in sufficient quantities to prevent airborne dust from leaving the site. Increased watering frequency would be required whenever wind speeds exceed 15 mph. Only reclaimed (nonpotable) water shall be used;
- All dirt stock-pile areas should be sprayed daily as needed;
- Permanent dust control measures identified in the approved Project revegetation and landscape plans should be implemented as soon as possible following completion of any soil disturbing activities;
- Vehicle speed for all construction vehicles shall not exceed 15 mph on any unpaved surface at the construction site;
- All trucks hauling dirt, sand, soil, or other loose materials are to be covered or should maintain at least two feet of freeboard (minimum vertical distance between top of load and top of trailer) in accordance with CVC Section 23114;
- Install wheel washers where vehicles enter and exit unpaved roads onto streets, or wash off trucks and equipment leaving the site (all water shall be non-potable); and
- Sweep streets at the end of each day if visible soil material is carried onto adjacent paved roads. Water sweepers with reclaimed water should be used where feasible.

4.3.c Result in a cumulatively considerable net increase of any criteria pollutant for which the project region is non-attainment under an applicable federal or state ambient air quality standard (including releasing emissions which exceed quantitative thresholds for ozone precursors)?

Less Than Significant With Mitigation Incorporated. Cumulative projects include local development, as well as general growth in the area. However, as with most development, the greatest source of emissions is from vehicular traffic that can travel well out of the local area. Therefore, in terms of air quality, the cumulative analysis would extend beyond any local projects and when wind patterns are considered, would cover an even larger area. Accordingly, the cumulative analysis for a project's air quality analysis must be regional in nature.

Construction and operation of cumulative projects would further degrade the local air quality, as well as the Basin's air quality. Air quality would be temporarily degraded during construction activities that occur separately or simultaneously. However, the greatest cumulative impact on the quality of regional air would be the incremental addition of pollutants from increased traffic from residential, commercial, and industrial development and the use of heavy equipment and trucks associated with the construction of these projects. The Project involves unmanned water facilities and would not be a direct trip generator. Therefore, due to the Project's nature and scope, the contribution to the Basin air emissions would not be "cumulatively considerable."

Additionally, adherence to SLOAPCD rules and regulations would alleviate potential impacts related to cumulative conditions on a project-by-project basis. Emission reduction technology, strategies, and plans are constantly being developed. As a result, the proposed project would not contribute a cumulatively considerable net increase of any nonattainment criteria pollutant. Therefore, cumulative operational impacts associated with implementation of the proposed project would be less than significant.

MITIGATION MEASURES

Refer to Mitigation Measure AQ-1. No additional mitigation is required.

4.3.d Expose sensitive receptors to substantial pollutant concentrations?

***Less Than Significant With Mitigation Incorporated*.** Sensitive receptors are defined as facilities or land uses that include members of the population that are particularly sensitive to the effects of air pollutants, such as children, the elderly, and people with illnesses. Examples of these sensitive receptors are residences, schools, hospitals, and daycare centers. CARB has identified the following groups of individuals as the most likely to be affected by air pollution: the elderly over 65, children under 14, athletes, and persons with cardiovascular and chronic respiratory diseases such as asthma, emphysema, and bronchitis. The sensitive receptors located on or near the Project site include the following (note these distances are from the Project boundary and not the actual areas of disturbance/construction activities):

- The nearby public recreation sites (the State Park Washburn Primitive Campground located approximately 2,625 feet to the southeast and San Simeon Creek Campground (located approximately 75 feet to the western portion of the Project site, just south of San Simeon – Monterey Creek Road); and

- The two single-family dwellings (State Park camp hosts/employee housing) located approximately 450 feet to the west of the Project site (of the proposed AWTP), approximately 750 feet south of San Simeon - Monterey Creek Road.

Emissions associated with the construction would primarily be due to the use of construction equipment diesel engines. Diesel engines would emit diesel particulate matter, which is defined by the CARB as a carcinogen. Under SLOAPCD, the proximity of sensitive receptors to a construction site constitutes a special condition and may require a more comprehensive evaluation of toxic diesel particulate matter impacts. As discussed previously, the Project is anticipated to result in less than significant construction-related impacts with incorporation of recommended Mitigation Measure AQ-1. The Project would also be subject to compliance with SLOAPCD Section 2.1.1(a): *Idling Restrictions Near Sensitive Receptors for Both On and Off-Road Equipment*. Compliance with the SLOAPCD rules and regulations would ensure that impacts involving toxic air contaminants would be less than significant and no additional mitigation is necessary.

According to the California Air Pollution Control Officers Associations (CAPCOA) *Health Risk Assessments For Proposed Land Use Projects*, adopted by the SLOAPCD, a Health Risk Assessment (HRA) would apply if the Project was considered a new proposed land use project that generates toxic air contaminants (such as gasoline stations, distribution facilities or asphalt batch plants) that impact sensitive receptors; or a new land use project that

will place sensitive receptors (e.g., residential units) in close proximity to existing toxic sources (e.g., freeway). The proposed Project does not include such uses, and thus, due to the lack of stationary source emissions, no health risk assessment is required. As the Project involves unmanned water facilities, which are not a direct trip generator, the Project would be incapable of resulting in localized operational long-term impacts to surrounding sensitive receptors. Impacts in this regard would be less than significant.

MITIGATION MEASURES

Refer to Mitigation Measure AQ-1. No additional mitigation is required.

4.3.e Create objectionable odors affecting a substantial number of people?

Less Than Significant Impact. The Project's construction activities would generate airborne odors from the operation of construction vehicles (i.e., diesel exhaust). However, construction related odors are typically from localized sources and do not emanate far from the source. Thus, odors would be isolated to the immediate vicinity of the construction site. The Project's construction activities would not create objectionable odors affecting a substantial number of people.

The Project involves construction and operation of emergency water supply facilities. Given their nature and scope, the proposed water wells and pipelines would not generate any odors. The AWTP generated waste stream (brine), which would be disposed for evaporation at the evaporation pond, would not create objectionable odors. Additionally, the evaporators would be controlled with weather stations, which would turn the evaporators on or off depending on wind speed and/or direction to control drift. The weather stations, installed onsite, would measure site weather conditions, including wind velocity, wind direction, humidity and temperature. The evaporators would be operated only when wind direction, wind velocity, temperature and humidity are within the preset ranges, which would limit the dispersion of any potential odors from the Project site. Therefore, the Project would not create objectionable odors affecting a substantial number of people.

MITIGATION MEASURES

No mitigation is required.

This page intentionally left blank.

4.4 BIOLOGICAL RESOURCES

This section is based on the Cambria Emergency Water Supply Project Habitat Assessment (HA) (RBF Consulting, June 2014); see Appendix B, *Biological Resources Assessment*. The biological resources *Regulatory Background* discussion is provided in Appendix B Section 2.

Would the project:	Potentially Significant Impact	Less Than Significant With Mitigation Incorporated	Less Than Significant Impact	No Impact
a. Have a substantial adverse effect, either directly or through habitat modifications, on any species identified as a candidate, sensitive, or special status species in local or regional plans, policies, or regulations, or by the California Department of Fish and Game or U.S. Fish and Wildlife Service?		✓		
b. Have a substantial adverse effect on any riparian habitat or other sensitive natural community identified in local or regional plans, policies, regulations or by the California Department of Fish and Game or U.S. Fish and Wildlife Service?		✓		
c. Have a substantial adverse effect on federally protected wetlands as defined by Section 404 of the Clean Water Act (including, but not limited to, marsh, vernal pool, coastal, etc.) through direct removal, filling, hydrological interruption, or other means?		✓		
d. Interfere substantially with the movement of any native resident or migratory fish or wildlife species or with established native resident or migratory wildlife corridors, or impede the use of native wildlife nursery sites?		✓		
e. Conflict with any local policies or ordinances protecting biological resources, such as a tree preservation policy or ordinance?		✓		
f. Conflict with the provisions of an adopted Habitat Conservation Plan, Natural Community Conservation Plan, or other approved local, regional, or state habitat conservation plan?				✓

This section contains the findings of the HA for the Project, which was conducted by RBF Consulting on May 8 and 9, 2014, to identify sensitive habitats and/or species potentially occurring within the boundaries of the Project site and/or adjacent study area that could pose a constraint to development, and assess the potential impacts from Project implementation. Since 1991, there have been several biological studies conducted for projects in the general area surrounding the Project site.

For purposes of this analysis, the Project site involves the CCSD 96-acre property shown on Exhibit 4.4-1, *Project Site Map*. A small section of the San Simeon Creek Lagoon (approximately the uppermost 230 feet) is located within the Project site; the remaining downstream portion continues offsite to the west onto San Simeon State Beach. Therefore, the following analysis addresses the survey area, which is comprised of the Project site and the western portion of the San Simeon Creek Lagoon.

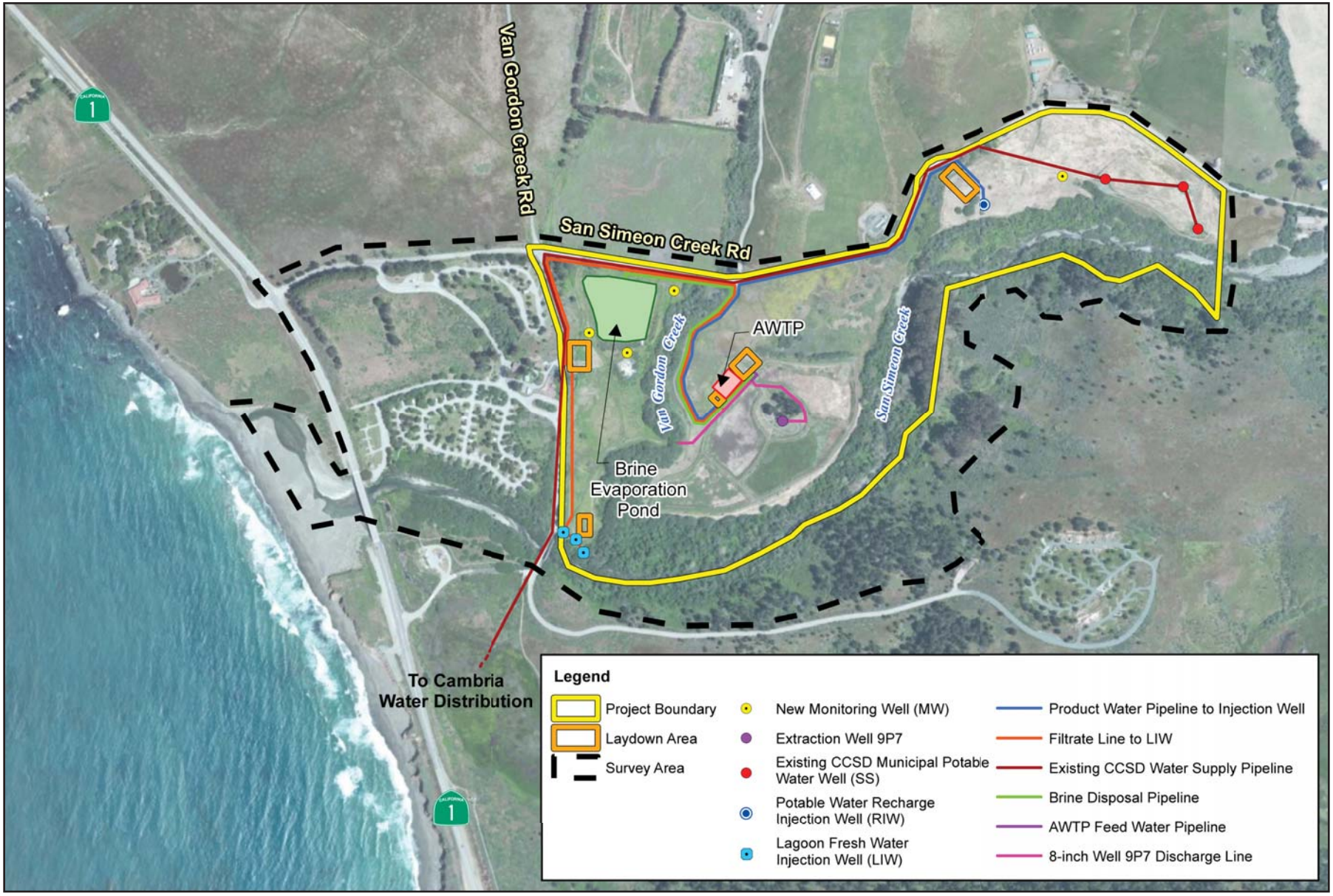

Source: National Hydrography Dataset, CDM Smith, ESRI World Imagery Basemap.

NOT TO SCALE

RBF CONSULTING A Baker Company

06/14 • JN 141290

CAMBRIA EMERGENCY WATER SUPPLY PROJECT
INITIAL STUDY/MITIGATED NEGATIVE DECLARATION

Project Site Map

Exhibit 4.4-1

Special attention was given to the suitability of the habitat onsite to support California red-legged frog (*Rana draytonii*), a federally threatened species and California species of special concern; western pond turtle (*Emys marmorata*), a California species of special concern; tidewater goby (*Eucyclogobius newberryi*), a federally endangered species and California species of special concern; the steelhead (*Oncorhynchus mykiss irideus*) south/central California coast distinct population segment (DPS), a federally threatened species and California species of special concern; western snowy plover (*Charadrius alexandrinus nivosus*), a federally threatened species and California species of special concern; two-striped garter snake, a California species of special concern; and general raptor species.

A literature review and records search was conducted to determine which sensitive biological resources have the potential to occur on the Project site or within its general vicinity. In addition, a general habitat assessment and field investigation of the Project site was conducted. The field investigation provided information on the site's existing conditions and potential for sensitive biological resources to occur. The methodologies used (concerning literature review, habitat assessment/field investigation, soil series assessment, plant communities, plants, wildlife and jurisdictional areas) are discussed in detail in Appendix B Section 3.

The existing site conditions, including the local climate, topography/soils and surrounding land uses are discussed in detail in Appendix B Section 4.

EXISTING CONDITIONS

The Project site is primarily undeveloped, although heavily disturbed. It consists mostly of open fields, with some paved roads and building development along Van Gordon Creek Road.

Vegetation

Seven plant communities were observed within the boundaries of the Project site during the habitat assessment (Exhibit 4.4-2, *Vegetation Map*): Central Coast Arroyo Willow Riparian Forest; Monterey Pine Stand; Lagoon/Estuary; Annual Grassland; Ruderal; Disturbed; and Developed. The Lagoon/Estuary vegetation extends here to the west into the survey area. A Sand Bar is located offsite to the west, within the survey area. The Sand Bar (and western portion of the San Simeon Creek Lagoon) are located offsite. These plant communities are described in further detail below.

Central Coast Arroyo Willow Riparian Forest

The Central Coast Arroyo Willow Riparian Forest is characterized by a dense, low, closed-canopy forest dominated by arroyo willow (*Salix lasiolepis*). It typically occurs in low gradient stream reaches in areas that are moist to saturated sandy or gravelly soil, especially in areas within the coastal fog incursion zone. Other common species along the edge of San Simeon Creek include western sycamore (*Platanus racemosa*), eucalyptus (*Eucalyptus* sp.), and cape ivy (*Delairea odorata*).

Monterey Pine Stand

One small stand of Monterey pine is located within the Project site. It is located in the center of the percolation ponds, with Well 9P7 located underneath the trees. The canopy cover in this area is composed entirely of Monterey pines, with the understory composed mostly of ripgut brome (*Bromus diandrus*) and wild oat (*Avena fatua*).

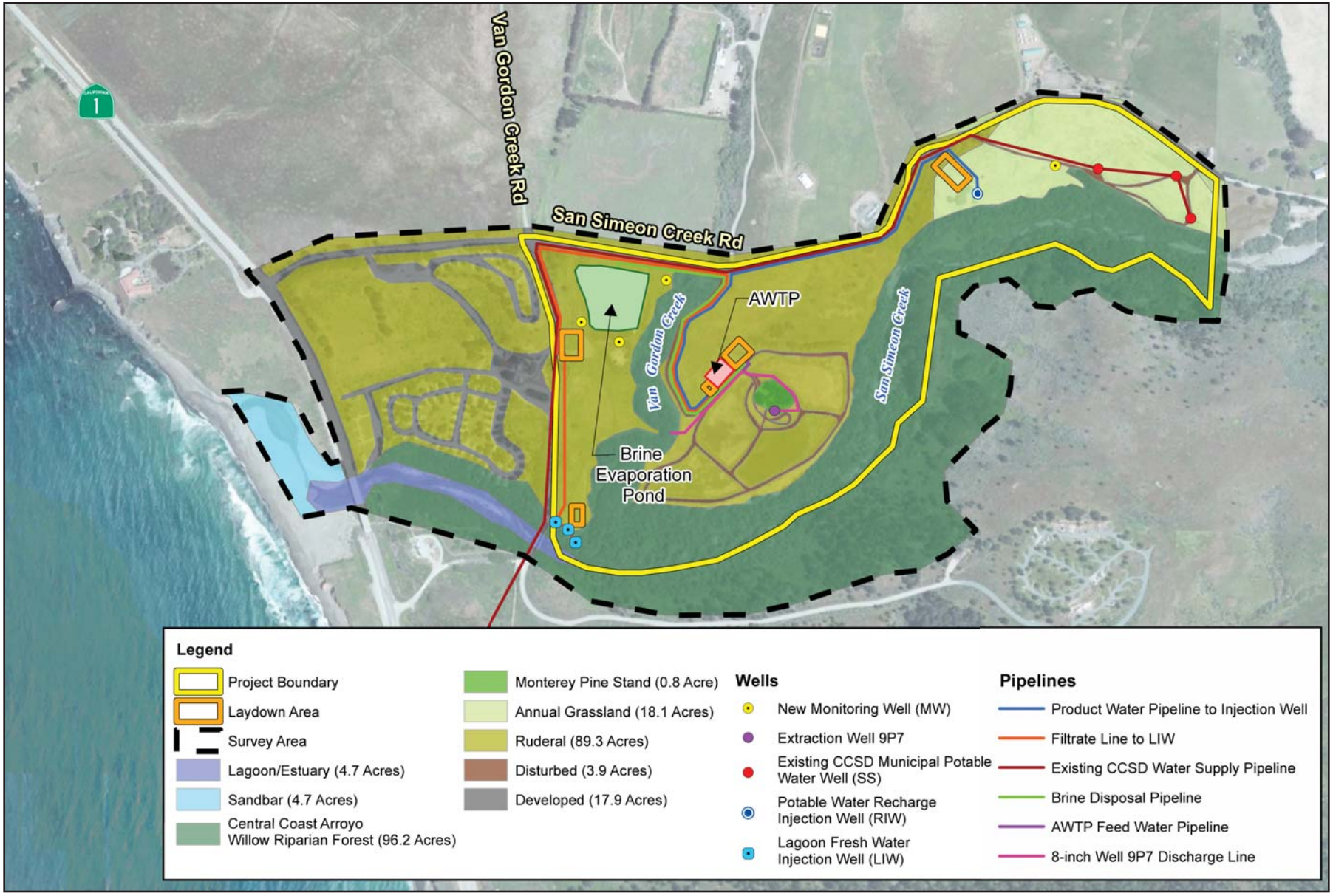

Source: CDM Smith, ESRI World Imagery Basemap.

NOT TO SCALE

RBF CONSULTING A Baker Company

06/14 • JN 141290

CAMBRIA EMERGENCY WATER SUPPLY PROJECT
INITIAL STUDY/MITIGATED NEGATIVE DECLARATION

Vegetation Map

Exhibit 4.4-2

Lagoon/Estuary

San Simeon Creek Lagoon is located west of the Project site, at the downstream end of San Simeon Creek. It crosses under SR-1 and spreads onto San Simeon State Beach, providing valuable habitat for steelhead, tidewater goby, and threespine stickleback. At the time of the habitat assessment, the sand bar restricting the water from the shore was closed, resulting in a freshwater lagoon habitat. The sand bar generally opens in late fall and closes again by mid-spring; while the sand bar is open, oceanic salt water combines with the freshwater of San Simeon Creek to create an estuary. The downstream end of the lagoon is not vegetated, however, the upstream end contains emergent and riparian vegetation, including cattails (*Typha* sp.) and arroyo willow.

Annual Grassland

An annual grassland is located on the eastern side of the Project site between San Simeon Monterey Creek Road and San Simeon Creek. There are three existing wells located in this area, which is also the reinjection well's (RIW's) proposed location. Some of the more common species in this area include canary grass (*Phalaris aquatica*), wild oat, ripgut brome, and coyote bush (*Baccharis pilularis*).

Ruderal

Much of the Project site can be considered ruderal. This includes the percolation ponds, the brine evaporation pond, and the unpaved path from the northeastern corner of the site to the lagoon injection wells' (LIWs') proposed location. Some of the more common species present within these areas include ripgut brome, black mustard (*Brassica nigra*) and shortpod mustard (*Hirschfeldia incana*), giant horse tail (*Equisetum telmateia* ssp. *braunii*), fennel (*Foeniculum vulgare*), plantain (*Plantago* sp.), coyote bush, Italian thistle (*Carduus pycnocephalus*), milk thistle (*Silybum marianum*), and canary grass.

Disturbed

Disturbed areas within the survey area can be described as unpaved dirt roads, particularly those surrounding the percolation ponds and those passing through the well field. These areas are not vegetated.

Developed

Developed areas within the survey area include existing wells and buildings, as well as the main access road to Well 9P7. These areas are not vegetated.

Wildlife

Plant communities provide food sources, along with foraging, nesting and denning sites, cover, and protection from adverse weather or predation. This section provides a discussion of those wildlife species observed, expected or not expected to occur onsite. The discussion is to be used as a general reference and is limited by the season, time of day, and weather condition in which the survey was conducted. Wildlife observations were based on calls, songs, scat, tracks, burrows and actual sightings of animals.

Amphibians

Much of the Project site and its immediate surrounding area would constitute suitable habitat for amphibians. However, only one amphibian was detected during surveys: Sierran chorus frog (*Pseudacris sierrae*). Adult frogs were heard calling in San Simeon Creek and tadpoles of various development stages were observed in several disconnected small pools in the dry portion of the creek. Other common amphibian species that could occur in San Simeon Creek or during heavy rainfall and subsequent ponding of water in the percolation ponds include western

toad (*Anaxyrus boreas*), American bullfrog (*Lithobates catesbeianus*), ensatina (*Ensatina eschscholtzii*), and various species of slender salamander (*Batrachoseps* sp.). The Project site and surrounding area have the potential to support multiple special-status amphibians, including foothill yellow-legged frog (*Rana boylii*), California red-legged frog, and Coast Range newt (*Taricha torosa*). The status and habitat requirements for each of these three species are discussed in greater detail in the *Sensitive Wildlife* Section below.

Reptiles

The Project site has the potential to support both terrestrial and aquatic reptiles. Two reptile species were observed during the habitat assessment: western fence lizard (*Sceloporus occidentalis*); and coast garter snake (*Thamnophis elegans terrestris*). Much of the Project site is primarily composed of disturbed, altered areas that are presently overgrown with vegetation. Two creeks, Van Gordon Creek and San Simeon Creek traverse portions of the Project site. The general Project vicinity has the potential to support a number of reptilian species including gopher snakes (*Pituophis catenifer*), garter snakes (*Thamnophis* ssp.), California kingsnake (*Lampropeltis getula californiae*), northern Pacific rattlesnake (*Crotalus oreganus oreganus*), alligator lizard (*Elgaria multicarinata*), and side-blotched lizard (*Uta stansburiana*). The Project site and surrounding area have the potential to support multiple special-status reptiles, including western pond turtle and two-striped garter snake (*Thamnophis hammondii*). The status and habitat requirements for each of these two species are discussed in greater detail in the *Sensitive Wildlife* Section below.

Avian

The Project site and adjacent area support a high variety of avian species. Because of the high number of species observed, only the most numerous are mentioned here. Those that were observed in the greatest quantities included turkey vulture (*Cathartes aura*), California gull (*Larus californicus*), Pacific-slope flycatcher (*Empidonax difficilis*), bushtit (*Psaltriparus minimus*), cedar waxwing (*Bombycilla cedrorum*), song sparrow (*Melospiza melodia*), red-winged blackbird (*Agelaius phoeniceus*), and house finch (*Haemorhous mexicanus*). The Project site and surrounding area have the potential to support special-status raptors such as ferruginous hawk (*Buteo regalis*) and prairie falcon (*Falco mexicanus*). The status and habitat requirements for each of these two species are discussed in greater detail in the *Sensitive Wildlife* Section below.

Mammals

The plant communities within the Project site are anticipated to provide suitable habitat for a number of mammalian species acclimated to heavy disturbance. However, most mammal species are nocturnal and are difficult to observe during a diurnal field visit. No mammals were directly observed during the habitat assessment, though coyote (*Canis latrans*) and other large mammal scat was observed throughout the survey area, and a woodrat (*Neotoma* sp.) midden was observed on the border of San Simeon Creek. Common mammalian species expected to occur on the Project site include California ground squirrel (*Otospermophilus beecheyi*), Botta's pocket gopher (*Thomomys bottae*), California vole (*Microtis californicus*), deer mouse (*Peromyscus maniculatus*), western skunk (*Mephitis mephitis*), raccoon (*Procyon lotor*), cottontail rabbits (*Sylvilagus audubonii*), and opossum (*Didelphis virginiana*). The Project site and surrounding area have the potential to support special-status mammals, including fringed myotis (*Myotis thysanodes*) and Yuma myotis (*Myotis yumanensis*). The status and habitat requirements for each of these two species are discussed in greater detail in the *Sensitive Wildlife* Section below.

Fish

When wetted, San Simeon Creek, Van Gordon Creek, the San Simeon Creek Lagoon, and their tributaries provide suitable habitat for fish. Threespine stickleback (*Gasterosteus aculeatus*) and the federally endangered tidewater goby (*Eucyclogobius newberryi*) were observed during the habitat assessment in San Simeon Creek and San Simeon Creek Lagoon. In addition to tidewater goby, these waterways have the potential to support another special-status fish species, steelhead trout. The status and habitat requirements for both of these species are discussed in greater detail in the *Sensitive Wildlife* Section below.

Nesting Birds

The plant communities within and adjacent to the Project site, have the potential to provide suitable nesting opportunities for raptors and passerines. The habitat assessment was conducted during the breeding season, and one likely red-tailed hawk (*Buteo jamaicensis*) nest was observed. A pair of red-tailed hawks was observed for a long period circling and flying in the vicinity of a large nest in a tall pine tree on the edge of San Simeon Creek, however, neither bird was observed entering or leaving the nest.

Migratory Corridors and Linkages

The eastern portion of the Project site abuts the foothills of the Santa Lucia Mountains. This mountain range provides a natural corridor to the north and south along the Coast Ranges. However, while the Project vicinity is considered to be a north-south migratory linkage along the mountains, no formal east-west linkage has been recognized along San Simeon Creek or the other waterways by connectivity assessments such as Missing Linkages or the California Essential Habitat Connectivity Project. Regardless, San Simeon Creek and the other waterways are likely to provide valuable migration habitat for birds and fish. San Simeon Creek is recognized by the California Coastal Commission and by CDFW as an essential creek for steelhead migration, and the lagoon that forms at the mouth of San Simeon Creek can host both juvenile steelhead and tidewater goby. While California red-legged frog can migrate or move to upland areas during the nonbreeding season, this is decided by individual frogs and is not necessarily a feature of every frog in a population. Nevertheless, frogs that may be present in San Simeon Creek or other waterways in the Project vicinity may migrate up and down the waterways or leave the water and head to upland grasslands during seasonal migrations.

Sensitive Biological Resources

The CNDDB was queried for reported locations of listed and sensitive plant and wildlife species as well as sensitive natural plant communities in the Cambria, Pebblestone Shut-in, Pico Creek, and San Simeon USGS 7.5-minute quadrangles. A search of published records of these species was conducted within these quadrangles using the CNDDB Rarefind 5 online software. The CNPS Inventory of Rare and Endangered Plants of California supplied information regarding the distribution and habitats of vascular plants in the vicinity of the Project site. The habitat assessment was used to assess the ability of the plant communities found onsite to provide suitable habitat for relevant special-status plant and wildlife species.

The literature search identified 33 sensitive plant species, 16 sensitive wildlife species, and two sensitive habitats as having the potential to occur within the queried quadrangles. Sensitive plant and wildlife species were evaluated for their potential to occur within the Project boundaries based on habitat requirements, availability and quality of suitable habitat, and known distributions. Species determined to have the potential to occur within the general vicinity are presented in Appendix A of Appendix B. Appendix A of Appendix B summarizes conclusions from analysis and field surveys regarding the potential occurrence of listed and sensitive plant and wildlife species within the Project site.

Numerous special-status plant and wildlife species are known to occur or have the potential to occur on the Project site or in its general vicinity. In particular, the percolation ponds, San Simeon Creek, and the San Simeon Creek Lagoon have the highest potential to support special-status species.

Sensitive Plants

Thirty-three (33) special-status plant species have been recorded in the Cambria, Pebblestone Shut-in, Pico Creek, San Simeon USGS quadrangles. Based on habitat requirements for specific species, availability, and quality of habitats needed by sensitive plant species, it was determined that the survey area has a moderate potential to provide suitable habitat for two sensitive plant species, with one additional species that was observed to be present. These species are listed below.

Compact Cobwebby Thistle. Compact cobwebby thistle (*Cirsium occidentale* var. *compactum*) is a perennial herb that flowers between April and June. It is designated by the CNPS with the Rare Plant Rank 1B.2, indicating that it is rare, threatened, or endangered in California and elsewhere, and is fairly endangered in California. It is endemic to California and is primarily known from San Luis Obispo County. It occurs in chaparral, grassland, coastal prairies, and coastal scrub on dunes and in clay soils at elevations between 16 and 492 feet.

There is suitable habitat for this species within the Project site's grassland areas. Many of the soils in the Project area also have clay elements necessary to support this species. This species was detected in 1991 on a coastal bluff approximately 0.25 mile north of the western edge of San Simeon Creek Lagoon and approximately 0.5 miles from the edge of the Project site. This species is expected to have a moderate potential to occur.

Jones' Layia. Jones' layia (*Layia jonesii*) is an annual herb that flowers between March and May. It is designated by the CNPS with the Rare Plant Rank 1B.2, indicating that is rare, threatened, or endangered in California and elsewhere, and is fairly endangered in California. It is endemic to California and is only known to occur in San Luis Obispo County. It occurs in clay and serpentine soils in chaparral and valley and foothill grassland at elevations between 16 and 1,312 feet.

Suitable habitat for this species occurs in the grassland areas. Many of the soils in the Project area also have clay elements needed to support this species. This species is expected to have a moderate potential to occur.

Monterey Pine. Monterey pine (*Pinus radiata*) is a perennial evergreen tree. It is designated by the CNPS with the Rare Plant Rank 1B.1, indicating that is rare, threatened, or endangered in California and elsewhere, and is seriously endangered in California. It is cultivated throughout the world however, only occurs naturally at three locations in California, including one near Cambria. It occurs in closed-cone coniferous forests and cismontane woodlands at elevations between 82 and 607 feet in elevation.

This species was observed onsite during the habitat assessment. It is present in a small stand in the center of the percolation ponds, surrounding Well 9P7.

Sensitive Wildlife

Sixteen (16) special-status wildlife species have been recorded in the Cambria, Pebblestone Shut-in, Pico Creek, San Simeon USGS quadrangles. Based on habitat requirements for specific species, availability and quality of habitats needed by sensitive wildlife species, it was determined that the Project site has a moderate to high potential to provide suitable habitat for ten (10) sensitive wildlife species. One additional sensitive wildlife species was observed onsite.

Amphibian and Reptile Species

Based on the results of the habitat assessment, it was determined that the habitat in and around the Project site has a moderate to high potential to provide suitable habitat for five (5) sensitive amphibian and reptile species listed in the CNDDB as having the potential to occur on or within the general vicinity of the Project site.

Western Pond Turtle. The western pond turtle is designated by the CDFW as a California species of special concern. It typically inhabits slow-moving streams, ponds, and marshes with exposed banks, logs, and other suitable locations for basking. Pond turtles mate and lay eggs in spring and summer in upland grassland habitat, and in most of their range, they will overwinter between October and April.

Western pond turtle has been previously documented in San Simeon Creek and San Simeon Creek Lagoon, however, was not observed during the habitat assessment. Suitable habitat is located within these two areas, particularly in the downstream reaches of San Simeon Creek where the creek substrate gives way from rocks to

sandy or muddy bottoms, which are often utilized by pond turtles for hiding during evasive movements. This species has a high potential to occur in San Simeon Creek, San Simeon Creek Lagoon, and Van Gordon Creek.

Foothill Yellow-legged Frog. Foothill yellow-legged frog is designated by the CDFW as a California species of special concern. It is primarily found in slow-moving rocky streams with open, sunny banks, though it may also be found in isolated pools and backwaters. Surrounding vegetation may include forests, woodlands, chaparral, and meadow communities. Foothill yellow-legged frogs typically breed between April and July after water levels have stabilized and turbidity has decreased.

Suitable habitat for this species is located in the upland portions of San Simeon Creek, where the creek contains a rocky substrate. At the time of the habitat assessment, this area was almost completely dry, with only small pools persisting that contained Sierran chorus frog tadpoles. This species has a moderate potential to occur in San Simeon Creek, San Simeon Creek Lagoon, and Van Gordon Creek.

California Red-legged Frog. The CRLF is federally listed as threatened and is designated by the CDFW as a California species of special concern. The CRLF is primarily found near ponds in humid forests, woodlands, grasslands, coastal scrub, and streamsides with plant cover and is most common in lowlands or foothills. The CRLF breeds typically breeds in winter and spring between February and April in permanent or ephemeral water sources including lakes, ponds, reservoirs, slow streams, marshes, bogs, and swamps.

CRLF have been reported in San Simeon Creek and its tributaries, however, no life forms of this species were recorded during the habitat assessment. The entire Project site is located within CRLF Critical Habitat Unit SLO-2; see Exhibit 4.4-3, *Critical Habitat and Essential Fish Habitat*. Observed wetted habitat within San Simeon Creek during the habitat assessment was highly suitable for this species. This species has a high potential to occur and, in the absence of protocol surveys, should be assumed present in San Simeon Creek, San Simeon Creek Lagoon, and Van Gordon Creek.

Coast Range Newt. The coast range newt is designated by the CDFW as a California species of special concern. It is typically found in rivers, streams, lakes, and ponds, particularly those with rocky substrates. It is never far from water. In most areas this species is terrestrial during most of the year, however, in anticipation of its breeding season (typically December to May) these individuals will migrate back to water and undergo a physiological change into an aquatic form. In areas of permanent water, some individuals may stay in the aquatic phase year-round.

There is suitable habitat for this species in San Simeon Creek, particularly in the upper portions and areas where water may be slow-moving or have distinct and protected pools. This species was not observed during the habitat assessment, however, has a moderate potential to occur in San Simeon Creek, San Simeon Creek Lagoon, and Van Gordon Creek.

Two-striped Garter Snake. The two-striped garter snake is designated by the CDFW as a California species of special concern. It is primarily an aquatic species and is typically found in or near permanent or semi-permanent water including creeks, pools, stockponds, and other areas. Surrounding vegetation is typically made up of chaparral, forest, woodland, and grassland, and may vary according to the season. This species is primarily active between spring and fall, and in many cases will retreat into a burrow for the winter. Breeding occurs in the spring after the snakes emerge into the active season again.

There is suitable habitat for this species in San Simeon Creek. While it is more likely to be found in the downstream sections where there is more water, it could occur throughout the creek. This species was not observed during the habitat assessment, however, has a moderate potential to occur in San Simeon Creek, San Simeon Creek Lagoon, and Van Gordon Creek.

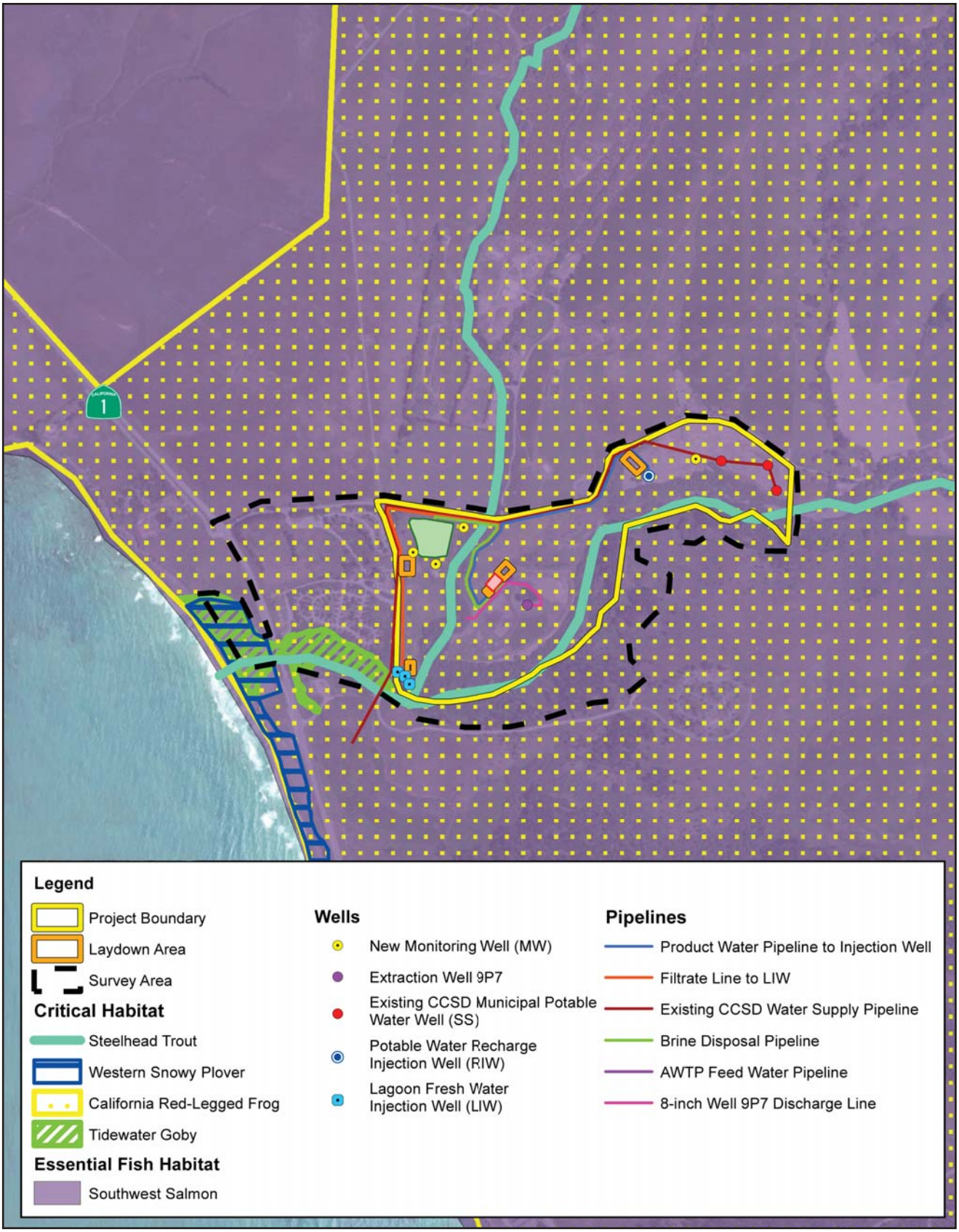

Source: USFWS Critical Habitat, NOAA Fisheries, CDM Smith, ESRI World Topographic Map.

NOT TO SCALE

RBF CONSULTING A Baker Company

06/14 • JN 141290

CAMBRIA EMERGENCY WATER SUPPLY PROJECT
INITIAL STUDY/MITIGATED NEGATIVE DECLARATION

Critical Habitat/Essential Fish Habitat

Exhibit 4.4-3

Avian Species

Based on the results of the habitat assessment, it was determined that the habitat in and around the Project site has a moderate to high potential to provide suitable habitat for two sensitive avian species listed in the CNDDB as having the potential to occur on or within the general vicinity of the Project site.

Ferruginous Hawk. The ferruginous hawk is on the CDFW watch list of sensitive species. This species frequents open grasslands, sagebrush flats, desert scrub, low foothills surrounding valleys, and fringes of pinyon-juniper habitats. It nests in foothills or prairies; on low cliffs, buttes, cut banks, shrubs, trees, or in other elevated structures, natural or human-made. This species requires large, open tracts of grasslands, sparse shrub, or desert habitats. Ferruginous hawk could roost or forage within the general Project vicinity, though it is only present in this area during the fall and winter. This species has a moderate potential to occur.

Prairie Falcon. The prairie falcon is on the CDFW watch list of sensitive species. This species is relatively uncommon and is most often found in dry, open habitats including deserts, shrublands, agricultural areas, and especially grasslands. While it will forage in these areas, it nests on cliff ledges. Along the immediate South/Central Coast, such as the Project site, this species is only present as a wintering bird, however, just inland it is a year-round resident.

This species could forage in the Project vicinity, especially in adjacent agricultural and open fields. It may also perch and roost on transmission structures and tall trees in the area. This species has a moderate potential to occur.

Mammalian Species

Based on the results of the habitat assessment, it was determined that the habitat on the Project site has a moderate to high potential to provide suitable habitat for two sensitive mammal species listed in the CNDDB as having the potential to occur on or within the general vicinity of the project site.

Fringed myotis. Fringed myotis occurs in a wide variety of habitats however, is most often found in pinyon-juniper, valley foothill hardwood, and hardwood-coniferous habitats, generally between 4,265 and 7,218 feet in elevation. However, it can also be found down to sea level, and in 2000 multiple individuals of this species were trapped close to shore, including one only 0.25 mile from the San Simeon Creek Lagoon. This species roosts in caves, mines, buildings, and crevices, and may roost in separate areas during the day from at night. Maternity colonies are located in the same types of roosting habitat between late April and September and may contain up to 200 individuals. This species typically hibernates between October and March, and maternity colonies may hibernate together as well.

There is suitable foraging habitat within the Project site and the surrounding vicinity. It is unknown if suitable roosting habitat is present, however, none was observed during the habitat assessment. This species is nocturnal and was not observed during the habitat assessment, however, is expected to have a moderate potential to occur.

Yuma myotis. Yuma myotis occurs in a wide variety of habitats however, is most often found in open forests and woodlands near water for foraging, generally at elevations between sea level and 10,827 feet. In 2000, three Yuma myotis were trapped close to shore only 0.25 mile from the San Simeon Creek Lagoon. This species roosts in caves, mines, buildings, and crevices, and may also use abandoned swallow nests and bridges as roosts. It may roost in separate areas during the day from at night, with night roosts generally being more open. Maternity colonies are located in the same types of roosting habitat and may contain thousands of individuals, though if temperatures exceed 40°C the individuals tend to roost elsewhere where it will be cooler and situate themselves farther apart from each other. This species probably hibernates, though not much information is available on its habits.

There is suitable foraging habitat within the Project site and the surrounding vicinity. It is unknown if suitable roosting habitat is present, however, none was observed during the habitat assessment. This species is nocturnal and was not observed during the habitat assessment, however, is expected to have a moderate potential to occur.

Fish Species

Tidewater Goby. The tidewater goby is federally listed as endangered and is designated by the CDFW as a California species of special concern. It occurs primarily in coastal lagoons and estuaries and has only been captured in marine environments in very few instances. In their habitat, tidewater gobies are generally present in the upper estuary where the freshwater and saltwater mix, and will range upstream into pure freshwater and downstream into areas of majority salt water (up to about 75 percent). Though they can be present in water where salinity ranges up to 28 parts per thousand, they are predominantly found in areas where salinity is less than 12 parts per thousand, i.e., on the upper edges of tidal bays and in coastal lagoons. Tidewater gobies reproduce throughout the year however, peak reproduction occurs in spring and late summer.

There is occupied habitat for this species downstream in San Simeon Creek Lagoon. This species was observed in the San Simeon Creek Lagoon, which is also tidewater goby designated Critical Habitat Unit SLO-5 during the habitat assessment; see Exhibit 4.4-3.

Steelhead (South/Central California Coast DPS). Steelhead is federally listed as threatened and is designated by the CDFW as a California species of special concern. The population in the Project vicinity ranges from Santa Cruz County south to, however, not including, the Santa Maria River. Typical freshwater steelhead habitat consists of gravel-bottomed, fast-flowing, well-oxygenated rivers and streams. Dissolved oxygen levels should be at least seven parts per million, and streams should have deep, low-velocity pools for wintering. Juveniles will typically spend between one and three years maturing in a freshwater or estuarine environment before migrating out to sea. After a typical span of one to four years of maturation in the ocean, the fish will return to their natal waters to spawn again.

There is suitable habitat for this species in San Simeon Creek. This species has been historically recorded over many years to occur within the creek, both in the creek and downstream in the lagoon. San Simeon Creek and Van Gordon Creek are part of the steelhead designated Critical Habitat unit that is located within the Estero Bay Hydrologic Unit; see Exhibit 4.4-3). While not observed during the habitat assessment, this species is expected to have a high potential for occurrence and should be assumed to be present in San Simeon Creek and Van Gordon Creek, in the absence of any formal surveys.

Sensitive Habitats

The CNDDB lists two sensitive habitats, Monterey Pine Forest and Valley Oak Woodland, as having the potential to occur within the Cambria, Pebblestone Shut-in, Pico Creek, San Simeon USGS quadrangles. Existing Well 9P7 in the center of the percolation ponds is in a small stand of Monterey pines. However, based on the small size of this stand, it is unlikely to be considered an actual “forest” community, rather an isolated stand. There are scattered Monterey pines present on the hillsides south of San Simeon Creek south of the Project site.

Critical Habitat

As discussed previously, Critical Habitat is designated under the authority of the ESA. However, consultation for impacts to Critical Habitat is only required when a project is issued federal permits (e.g., a U.S. Army Corps of Engineers Section 404 Clean Water Act permit). If a project does not have a federal nexus, Critical Habitat consultations are not required.

Designated Critical Habitat for four species is located in and around the Project site; see Exhibit 4.4-3. CRLF Critical Habitat Unit SLO-2 encompasses the entire Project site. This area includes aquatic habitat that is suitable for both breeding (PCE 1) and non-breeding (PCE 2) habitat, as well as upland habitat that could be used for foraging (PCE 3) and dispersal (PCE 4).

Tidewater goby Critical Habitat Unit SLO-5 includes San Simeon Creek Lagoon and the downstream reach of an eastern tributary immediately north of SR-1. This area includes a persistent, shallow lagoon containing soft substrate suitable for the construction of burrows for reproduction (PCE 1a) and with submerged and emergent aquatic vegetation that provides protection from predators and high flow events (PCE 1b).

South Central California Coast steelhead Critical Habitat is located within the Estero Bay Hydrologic Unit and includes an approximately 5.5-mile stretch of San Simeon Creek beginning downstream of the North Fork/South Fork San Simeon Creek convergence and ending at the ocean.

Snowy plover Critical Habitat Unit CA-26 is located along San Simeon State Beach and encompasses most of San Simeon Creek Lagoon downstream (west) of SR-1. This area includes sandy beach above and below the high-tide line (PCE 1) with occasional surf-cast wrack supporting small invertebrates and generally barren to sparsely vegetated terrain (PCEs 2 and 3). It is an important wintering area where up to 143 snowy plovers have been recorded in a single season (at the time of the Critical Habitat designation in 2012).

Essential Fish Habitat

As discussed previously, EFH is designated under the MSA. The proposed Project is located within designated EFH for Coho salmon; see Exhibit 4.4-3. EFH for various species of groundfish is designated near the proposed Project however, ends at the shoreline. Under the provisions of MSA Section 305(b), if the Project has a federal nexus and will be issued a federal permit, the federal agency will be required to consult with NMFS for impacts to EFH. If no federal agency is involved, this consultation will not be necessary.

IMPACT ANALYSIS

4.4.a Have a substantial adverse effect, either directly or through habitat modifications, on any species identified as a candidate, sensitive, or special status species in local or regional plans, policies, or regulations, or by the California Department of Fish and Game or U.S. Fish and Wildlife Service?

Less Than Significant With Mitigation Incorporated. The following discussion provides a summary of survey results; avoidance and minimization efforts; direct, indirect, and cumulative Project impacts; and compensatory mitigation measures for each biological resource area required to be analyzed according to the California Environmental Quality Act (CEQA), based on Appendix G (Environmental Checklist Form) of the CEQA Guidelines.

Species determined to have the potential to occur within the general vicinity are presented in Appendix A of Appendix B.

Listed Plant Species

No federally or State listed plant species occur or have the potential to occur on the Project site or within the riparian habitat associated with San Simeon and Van Gordon Creeks.

Special-Status Plant Species

Survey Results

Three special-status plant species were identified during a CNDDB and CNPS search as potentially occurring in the area: compact cobwebby thistle; Jones' layia; and Monterey pine. Compact cobwebby thistle was identified during surveys in 1991 approximately 0.5 mile northwest of the Project site, and Monterey pine was observed onsite during the habitat assessment. Jones' layia has not been recorded onsite, however, has a low to moderate potential to occur based on availability of suitable habitat.

Avoidance and Minimization Measures

Compact cobwebby thistle and Jones' layia, while not identified during the habitat assessment, can be found in grasslands and scrub habitats on the eastern side of the Project site. This area would have minimal development, with only the installation of the RIW occurring. A Monterey pine stand is present in the center of the percolation ponds, near Well 9P7. The pipeline from Well 9P7 to the AWTP would be sited to avoid this stand.

Direct and Indirect Project Impacts

Direct or indirect impacts could occur to special-status plant species as a result of Project implementation. Excavation and fill for wells and pipelines could result in the loss of sensitive plant species. Construction activity could result in the spread of nonnative weed seeds via clothing, tires, or vehicle undercarriages. In addition, vehicle travel and pedestrian foot traffic within the Project boundaries could result in the trampling of plant species. Mitigation Measures BIO-1 through BIO-5 are proposed to reduce Project impacts to less than significant.

Listed Wildlife Species

Tidewater Goby

Survey Results. Tidewater goby was observed in San Simeon Creek Lagoon during the habitat assessment. It is historically known to be present and to spawn within San Simeon Creek Lagoon; San Simeon Creek Lagoon has also been designated as tidewater goby Critical Habitat Unit SLO-5.

Avoidance and Minimization Efforts. This species occurs in San Simeon Creek Lagoon, however, is unlikely to occur within either San Simeon Creek or Van Gordon Creek, where riffles and even minor turbulence are deterrents. The lagoon would not be directly affected by construction and is located mostly offsite. Only a small section of the lagoon, approximately the uppermost 230 feet, is located within the Project site. BMPs would be implemented to avoid or reduce any sedimentation within the water bodies; see Section 4.9, *Hydrology and Water Quality*.

Direct and Indirect Project Impacts. While direct impacts to special-status wildlife species are expected to be negligible during construction, indirect operational impacts may occur as the result of the Project. The Project proposes to extract 400 gallons per minute (gpm) of groundwater from the San Simeon Creek aquifer (via Well 9P7) upstream of San Simeon Creek Lagoon. The extracted water would be treated at the proposed AWTP and 300 gpm would be reinjected (via RIW) for subsequent distribution to Cambria. To mitigate the extraction of groundwater, the Project proposes to return 100 gpm of treated water to the San Simeon Creek aquifer adjacent to the Lagoon (via LIWs or via existing Well 9P7 discharge pipeline directly into Van Gordon Creek adjacent to the AWTP). If the Project were to result in a water budget deficit, it could result in quicker reduction in stream levels during dry periods. While a perennial section of San Simeon Creek is known to be present upstream of the confluence with Steiner Creek, the lower reaches are intermittent and are generally only inundated from late fall to late spring or early summer. Early reduction in water levels could result in a premature sandbar closure at San Simeon Creek Lagoon. This could reduce the amount of habitat for tidewater goby found in the lagoon habitat. Unexpected habitat

loss could result in decreased food and shelter, resulting in increased competition for resources not just between tidewater gobies, but between gobies and other fish species that may be present in the lagoon. The Project's hydrologic model primarily addresses the potential for Project-related groundwater impacts; see Section 4.9. However, it is unknown what specific connection there is between groundwater and the surface water in San Simeon Creek, San Simeon Lagoon, and the water flowing in from the Pacific Ocean. The modeling suggests that Project effects to the water budget would be limited. However, given the uncertainty that exists regarding the possible effects these actions may have on the supply of surface water in San Simeon Creek and San Simeon Creek Lagoon, monitoring of groundwater and surface water, as well as additional hydrologic modeling, is recommended to track changes in groundwater, surface water, and instream and riparian habitats. The monitoring would be conducted in order to remove remaining uncertainty and fully understand the effects of the changes to the water budget resulting from the Project. An Adaptive Management Program (AMP) (see Mitigation Measure BIO-6) is proposed to gather the needed data and provide an oversight of uncertain effects of removing 300 gpm from the groundwater adjacent to San Simeon Creek. The AMP would allow up to 150 gpm of water to be returned at either the LIWs or the discharge pipe, depending on stream conditions, to avoid potential adverse impacts to aquatic species. In addition to the AMP, Mitigation Measures BIO-1, BIO-2, and BIO-6 are proposed to reduce Project impacts to less than significant. Based on the results of the biological monitoring, the AMP would provide measures to increase or decrease the amount of water injected or discharged back into San Simeon Creek and Lagoon. It is expected that the minimum amount of water returned at any time would be 100 gpm, but that when necessary based on biological monitoring, the amount of continual water would increase to 150 gpm.

Steelhead (South/Central California Coast DPS)

Survey Results. Steelhead trout were not observed during the habitat assessment. This species is known to occur and to spawn in San Simeon Creek, and San Simeon Creek Lagoon is used as habitat for smolts preparing to enter the Pacific Ocean. San Simeon Creek and Van Gordon Creek are part of steelhead designated Critical Habitat in the Estero Bay Hydrologic Unit.

Avoidance and Minimization Efforts. This species occurs in both San Simeon Creek, San Simeon Creek Lagoon, and, if inundated, Van Gordon Creek. These areas would not be directly affected by the Project however, a portion of each is located within the Project site. BMPs would be used as necessary to avoid or reduce any sedimentation within the water bodies.

Direct and Indirect Project Impacts. As described above, direct impacts to aquatic species are expected to be negligible during construction. However, indirect operational impacts could occur, particularly if reductions in the water table result in earlier-than-average seasonal drops in creek surface water. Adult steelhead typically migrate from the ocean into coastal streams between December and May, according to weather patterns and stream flow. On the other hand, smolts typically migrate downstream to lagoons and eventually the ocean between March and June, although low stream flows can block smolts from reaching their destinations. Reduced water in the lower reaches of San Simeon Creek could lead to earlier-than-usual sandbar closures in San Simeon Creek Lagoon, affecting the ability of smolts to migrate to the ocean and prematurely altering the lagoon/estuary temporal interchange. This may result in smolts becoming stranded in San Simeon Creek Lagoon and spending an extra year in the lagoon instead of at sea. Stranded smolts would suffer from increased competition in the lagoon habitat, particularly as upstream areas within San Simeon Creek dry up and leave only an isolated portion of the creek and lagoon. The AMP as described above is proposed to avoid potential adverse impacts to aquatic species, including the steelhead. In addition to the AMP, Mitigation Measures BIO-1, BIO-2, BIO-6, and BIO-7 are proposed to reduce Project impacts to less than significant.

California Red-legged Frog

Survey Results. No CRLF life stages were detected during the habitat assessment. This species is historically known to occur in San Simeon Creek and in addition the entire Project site is included in CRLF designated Critical Habitat Unit SLO-2.

Avoidance and Minimization Efforts. This species occurs in San Simeon Creek, San Simeon Creek Lagoon, and Van Gordon Creek. Some upland habitat present in the percolation ponds may be used by this species. All four areas are located within the Project site and would be avoided during construction. BMPs would be used as necessary to avoid or reduce any sedimentation within the water bodies; see Section 4.9.

Direct and Indirect Project Impacts. As described above, direct impacts to aquatic species are expected to be negligible during construction. However, indirect operational impacts could occur, particularly if reductions in the water table result in earlier-than-average seasonal drops in creek surface water. In San Simeon Creek, because CRLF can breed as late as late April, early drops in water levels could possibly affect the ability of CRLF eggs to hatch. CRLF typically attaches its eggs to floating vegetation or vegetation rooted in the creek substrate; drops in the water level could cause egg masses to desiccate. Tadpoles in turn could be lost if the creek dries too quickly, or increased competition for food from fish (such as stranded smolts) could result in tadpoles being subjected to increased predation. The AMP as described above is proposed to avoid potential adverse impacts to aquatic species, including the CRLF. In addition to the AMP, Mitigation Measures BIO-1, BIO-2, BIO-6, BIO-8, BIO-9 are proposed to reduce Project impacts to less than significant.

Special-Status Wildlife Species

Survey Results

Only one non-listed special-status wildlife species was observed during the habitat assessment: yellow warbler (*Setophaga petechia*). In addition, based on a CNDDB search, eight additional species were determined to have a moderate or higher potential to occur within the Project site: ferruginous hawk; western pond turtle; prairie falcon; fringed myotis; Yuma myotis; foothill yellow-legged frog; Coast Range newt; and two-striped garter snake. Western pond turtle and two-striped garter snake are historically known to occur in San Simeon Creek.

Avoidance and Minimization Measures

Of the nine non-listed special-status wildlife species that could occur on the Project site, all would most likely occur in areas that are likely to be directly avoided by the Project. Yellow warbler would forage and nest in the summer in riparian trees; which are expected to be avoided except for possible light trimming. Ferruginous hawk and prairie falcon would be most likely to occur in the winter around grassy fields such as that on the east side of the Project site or in surrounding agricultural fields; grassy fields would be minimally affected. Also, by constructing the Project in the summer, direct construction effects to these two species would be avoided. Fringed myotis and Yuma myotis are most likely to roost in trees during the day and forage over the water or over fields at night; by constructing during the day, foraging would be unlikely to be affected, and by mostly avoiding arboreal habitat, roosting habitat would be mostly unaffected. Finally, western pond turtle, foothill yellow-legged frog, Coast Range newt, and two-striped garter snake would be most likely to occur in San Simeon Creek, San Simeon Creek Lagoon, and Van Gordon Creek, or in the generally immediate upland areas. These areas would be avoided by Project construction. If the Project is constructed in the summer, these species would be expected to be mostly tied to the water as well.

Direct and Indirect Impacts

Direct impacts to any of these species are expected to be minimal. Construction near trees may result in disturbance to nesting birds or roosting bats, potentially resulting in increased stress or nest failure. In extreme situations,

excessive disturbance may cause individual animals to leave the area, temporarily or permanently. For aquatic species, changes in seasonal water levels can result in habitat degradation and premature life events (e.g., upland breeding, overwintering, migrations). The AMP as described above is proposed to avoid potential adverse impacts to aquatic species, including the western pond turtle, foothill yellow-legged frog, Coast Range newt, and two-striped garter snake. In addition to the AMP, Mitigation Measures BIO-1, BIO-2, and BIO-10 through BIO-13 are proposed to reduce Project impacts to less than significant.

Overall, the Project would have less than significant adverse effects on plant or wildlife species identified as a candidate, sensitive, or special status species with implementation of the AMP and recommended mitigation measures. Further, as discussed in Response 4.4.e below, the Project is subject to compliance with the LCP Policies and CZLUO standards that address potential impacts to biological resources.

EXISTING REGULATIONS

Refer to the LCP Policies and CZLUO standards specified in Response 4.4.e.

MITIGATION MEASURES

BIO-1 All work areas shall be visibly flagged or staked prior to construction. Construction activities shall be limited to these approved work areas except with prior authorization from regulatory agencies.

BIO-2 A Worker Environmental Awareness Program (WEAP) shall be implemented to educate all construction personnel of the area's environmental concerns and conditions and relevant environmental protection measures. The WEAP shall include environmental concerns and appropriate work practices, including spill prevention, emergency response measures, protection of sensitive resources, and proper implementation of BMPs, to all construction and maintenance personnel. All new workers that arrive after construction has started shall be trained under the WEAP within two days' time.

BIO-3 A qualified biologist or botanist shall conduct a preconstruction clearance survey for special-status plant species within the Project site. If present, any special-status plants shall be clearly flagged for avoidance with a suitable buffer zone during construction. If avoidance is not possible, the Project Applicant shall discuss potential relocation strategies with applicable regulatory agencies.

BIO-4 Prior to construction, all heavy equipment to be left onsite in laydown yards shall be washed offsite with non-potable water and cleaned of all potential non-native weed seeds. Worker trucks shall be washed daily if they will be driven offroad or shall otherwise be left parked in laydown yards or on existing roads during construction.

BIO-5 All excavated material shall be removed from the Project site and disposed of properly or reused elsewhere. If left onsite, the material shall be moved into an area where it shall not wash or erode into any riparian areas and shall be suitably covered or watered to reduce the potential for dust during high winds or rain events.

BIO-6 The Project Applicant shall develop and implement an Adaptive Management Program (AMP) for post construction operations. The AMP shall be incorporated indefinitely until the Project facilities are no longer in use or until deemed no longer necessary by applicable regulatory agencies. The AMP is intended to monitor and protect the lagoon and riparian habitats adjacent to the Project site and, by extension, protect the species that inhabit it. The AMP's primary goal shall be to monitor the response of the lagoon and riparian habitats to the Project's proposed reinjection of 100 gpm of extracted water into the aquifer adjacent to the eastern extent of the lagoon. Based on any noted adverse changes in these habitats, the well operations shall be adjusted so that the amount of treated water that is injected

or discharged back into the system, is either increased or decreased to restore affected habitat features. This may require a combination of any of the following:

- Monthly stream surveys during the period that the Project is actively drawing groundwater (currently expected to be May through October). The surveys shall document the upstream extent of inundation in each water body, as well as water depth at predetermined locations to measure changes in water levels;

- Surveys for tidewater goby, steelhead, CRLF, western pond turtle, and/or two-striped garter snake shall be conducted to measure population levels over time; and

- Riparian vegetation in the water bodies and in their upland extents shall be monitored.

BIO-7 The Project Applicant shall delay the annual period of groundwater pumping to the greatest extent possible, preferably after June, in order to maximize the amount of time for steelhead to migrate up and down San Simeon Creek.

BIO-8 Preconstruction diurnal and nocturnal surveys shall be conducted for California Red-legged Frog (CRLF) in the percolation ponds and surrounding area within 48 hours of the start of construction. Any CRLF detected during surveys shall be relocated to areas outside of the construction zone, i.e. to San Simeon Creek, San Simeon Creek Lagoon, or Van Gordon Creek. Exclusion fencing shall be placed around work areas to avoid or minimize the risk of CRLF migrating into work areas during upland movements. The biologist conducting the surveys and performing any relocations shall hold a valid 10(a)(1)(A) recovery permit and Scientific Collecting Permit allowing take of CRLF.

BIO-9 All Project-related trash, food, or otherwise, shall be disposed of after use in appropriate secured containers. These containers shall be emptied offsite regularly.

BIO-10 No more than one week prior to construction, a qualified biologist shall conduct a preconstruction nesting bird clearance survey in all work areas and all areas within 500 feet of the general construction zone. Active nests shall be given an avoidance buffer, typically 300 feet for non-listed, non-raptor species, and 500 feet for listed or raptor species. This buffer shall remain in place until the young fledge or the nest otherwise becomes inactive, and may be reduced with approval from CDFW and/or USFWS.

BIO-11 If deemed necessary by the CDFW, a preconstruction roosting bat survey shall be conducted within one week prior to construction. Any bat roosts found in the Project vicinity shall be protected with coordination from CDFW.

BIO-12 In areas adjacent to riparian habitat, construction noise shall be minimized to the amount necessary to avoid or reduce the risk of adverse impacts to wildlife.

BIO-13 In areas within 100 feet of riparian habitat, BMPs shall be implemented. These should include, but are not limited to, sedimentation control, erosion control, spill prevention and cleanup, and hazardous materials.

4.4.b Have a substantial adverse effect on any riparian habitat or other sensitive natural community identified in local or regional plans, policies, regulations or by the California Department of Fish and Game or U.S. Fish and Wildlife Service?

4.4.c Have a substantial adverse effect on federally protected wetlands as defined by Section 404 of the Clean Water Act (including, but not limited to, marsh, vernal pool, coastal, etc.) through direct removal, filling, hydrological interruption, or other means?

Less Than Significant With Mitigation Incorporated.

Survey Results

The Project site contains two intermittent creeks (San Simeon Creek and Van Gordon Creek) and one wetland (San Simeon Creek Lagoon). San Simeon Creek traverses the site's southern portion and continues along its southern boundary, whereas Van Gordon Creek traverses the site's western portion. San Simeon Creek Lagoon begins in San Simeon Creek approximately 230 feet upstream of Van Gordon Creek Road and extends west to San Simeon State Beach, where it seasonally switches between a lagoon and an estuary. Vegetation within these water bodies is dominated by a Central Coast Arroyo Willow Riparian Forest community as described above. A jurisdictional delineation has not yet been conducted to determine specific acreages of potentially jurisdictional areas. However, based on the habitat assessment, it is expected that both Van Gordon and San Simeon Creeks would qualify as Waters of the U.S. and Waters of the State.

Avoidance and Minimization Efforts

The Project components are proposed outside of these jurisdictional areas. No construction is proposed within the streambeds, lagoon, or within the terrestrial extent of the riparian vegetation. Nearby construction would be shielded from riparian vegetation through the implementation of BMPs.

Direct and Indirect Project Impacts

Few if any direct impacts to riparian habitat are expected to occur. Minor tree trimming may be necessary for areas where the Project is sited close to vegetation. However, potentially significant indirect impacts could occur as a result of Project implementation and groundwater loss; refer to Response 4.4.a above and 4.4.d below in regards to effects on wildlife and effects on movement corridors. In addition to these potential effects, implementation and operation of the Project may result in degradation of riparian habitat. Drawdown of the water table could have adverse effects on riparian vegetation, eventually resulting in loss or conversion of vegetation. If this is a seasonal drawdown, it may only result in seasonal impacts, e.g., temporary browning or loss of vitality of vegetation. However, if Project operation results in permanent, gradual, and cumulatively reduced groundwater levels, riparian vegetation may suffer permanent effects.

If the depth of the water table has any direct correlation to the amount and longevity of surface water, reductions in surface water may lead to reduced growth rates and plant mortality, eventually leading to reduced plant cover and reduced plant species diversity as a result of prolonged low flows. This is because during the dry season, the increased ambient temperatures cause increased transpiration in plants, resulting in increased water loss from leaves. Water replenishment is less crucial during the wet season, as temperatures are cooler, transpiration rates are lower, and rainfall adds to the water that is already present in streambeds. In the dry season, however, plants can become stressed more easily during low water conditions. While phreatophytic—vegetation that draws water from both above and below the surface—and more drought-tolerant vegetation like Fremont's cottonwood (*Populus fremontii*), willows (*Salix* sp.), and mulefat (*Baccharis salicifolia*) may persist longer under dryer conditions, shallow-rooted and streamside vegetation would be expected to be more susceptible to general reductions in water levels (Stromberg et al. 2007). Additionally, nutrient-cycling organic litter decomposition that is normally aided by

downstream water movement may be reduced by low surface flows. The AMP as described above is proposed to avoid potential adverse impacts to riparian vegetation and wetlands. In addition to the AMP, Mitigation Measures BIO-1, BIO-6, BIO-14, and BIO-15 are proposed to reduce Project impacts to less than significant.

EXISTING REGULATIONS

Refer to the LCP Policies and CZLUO standards specified in Response 4.4.e.

MITIGATION MEASURES

See Mitigation Measures BIO-1, BIO-6, and BIO-14 above and the following.

BIO-15 The Project Applicant shall consult with the Corps, CDFW, and Regional Board regarding potential impacts and required mitigation once the final Project design is available. If impacts are anticipated to occur to instream and riparian habitats, wetland permits may be required from these agencies.

4.4.d Interfere substantially with the movement of any native resident or migratory fish or wildlife species or with established native resident or migratory wildlife corridors, or impede the use of native wildlife nursery sites?

Less Than Significant With Mitigation Incorporated.

Survey Results

Although not observed during the habitat assessment, steelhead trout are known to migrate up and down San Simeon Creek. Adult steelhead trouts migrate from the ocean upstream into San Simeon Creek between December and May, and smolts migrate downstream toward the ocean between March and June. Several mule deer (*Odocoileus hemionus*) were observed in the percolation ponds and likely utilize the riparian corridor to make movements up and down the stream between foraging, fawning, and shelter areas, as well as other critical habitat types. Other large mammals may utilize the riparian corridors to move in cover, particularly between habitat near the coast and habitat in the Santa Lucia Mountains. Finally, birds likely use the riparian corridor for movements.

Avoidance and Minimization Efforts

San Simeon Creek and the general riparian zone would be mostly avoided by construction, with any tree trimming and direct disturbance kept to the minimal amount necessary.

Direct and Indirect Project Impacts

Migrating fish species may be deterred from moving through the areas due to active construction. However, movements of terrestrial and avian species are otherwise not expected to be significantly affected. The movement corridors are not expected to be directly affected. However, San Simeon Creek, San Simeon Creek Lagoon, and Van Gordon Creek may experience indirect Project-related effects as a result of the drawdown in the water table. As discussed above, if the depth of the water table has a strong correlation with the amount of surface water available in these water bodies, it may result in early seasonal cuts in aboveground water supplies. This would in turn degrade the quality of the movement corridor and potentially render it unusable by animals that are strictly confined to aquatic movement (e.g., fish). The AMP as described above is proposed to avoid potential adverse impacts to riparian vegetation and wetlands. In addition to the AMP, Mitigation Measures BIO-1, BIO-6, BIO-14, and BIO-15 are proposed to reduce Project impacts to less than significant.

EXISTING REGULATIONS

Refer to the LCP Policies and CZLUO standards specified in Response 4.4.e.

MITIGATION MEASURES

See Mitigation Measures BIO-1, BIO-2, BIO-7, and BIO-14 above.

4.4.e Conflict with any local policies or ordinances protecting biological resources, such as a tree preservation policy or ordinance?

Less Than Significant With Mitigation Incorporated. The *Coastal Zone North Coast Planning Area Rural Combining Designation Map*[1] assigns Combining Designations to North Coast areas containing hazards, sensitive resource areas, environmentally sensitive habitat areas, historic and archaeologically sensitive areas, and public facilities. As shown on the Combining Designation Map (see Exhibit 4.4-4, *Environmentally Sensitive Habitat*), portions of the Project site are assigned the following Combining Designations:

- Sensitive Resource Area (SRA);
- Environmentally Sensitive Habitat, Terrestrial Habitat (ESH-TH); and
- Environmentally Sensitive Habitat, Coastal Creeks (ESH-CC).

Additionally, the Project site (and all of the NC Planning Area) is assigned Local Coastal Program (LCP) Combining Designation.

Coastal Zone Land Use Ordinance Consistency Analysis

The San Luis Obispo County Coastal Zone Land Use Ordinance, Title 23 of the San Luis Obispo County Code, is intended to guide land use and development within the California Coastal Zone established by the California Coastal Act of 1976. It contains a series of permit requirements, design standards, special uses, nonconforming uses, and enforcement provisions. While the CZLUO is only one of four parts of the San Luis Obispo County LCP, the CZLUO incorporates elements of the Framework for Planning, CPP, and NCAP, and serves as the final implementation stage of the LCP, requiring detailed implementation measures and standards for development within the Coastal Zone. The NCAP contains standards for environmentally sensitive habitat (ESH) areas, however, none are relevant to the Project. In addition, the resource protection policies within the CPP (and County LCP) are directly tied to the more detailed provisions within the CZLUO. Therefore, compliance with the LCP's overall environmental goals would be achieved through compliance with the CZLUO. The goal of this section is to describe the Project's state of compliance with the CZLUO's environmental provisions.

San Luis Obispo County Coastal Zone Land Use Ordinance

Sensitive Resource Areas (CZLUO Sections 23.07.160 to 23.07.166)

These CZLUO sections dictate measures for construction located within SRAs. The survey area contains several designated SRAs (see Exhibit 4.4-4), including the following:

- A stand of Monterey pines located on the south side of San Simeon Creek (ESH-TH);
- North Coast Creeks, including San Simeon Creek (ESH-CC); and
- San Simeon Creek Lagoon ((ESH-CC).

[1] Ibid.

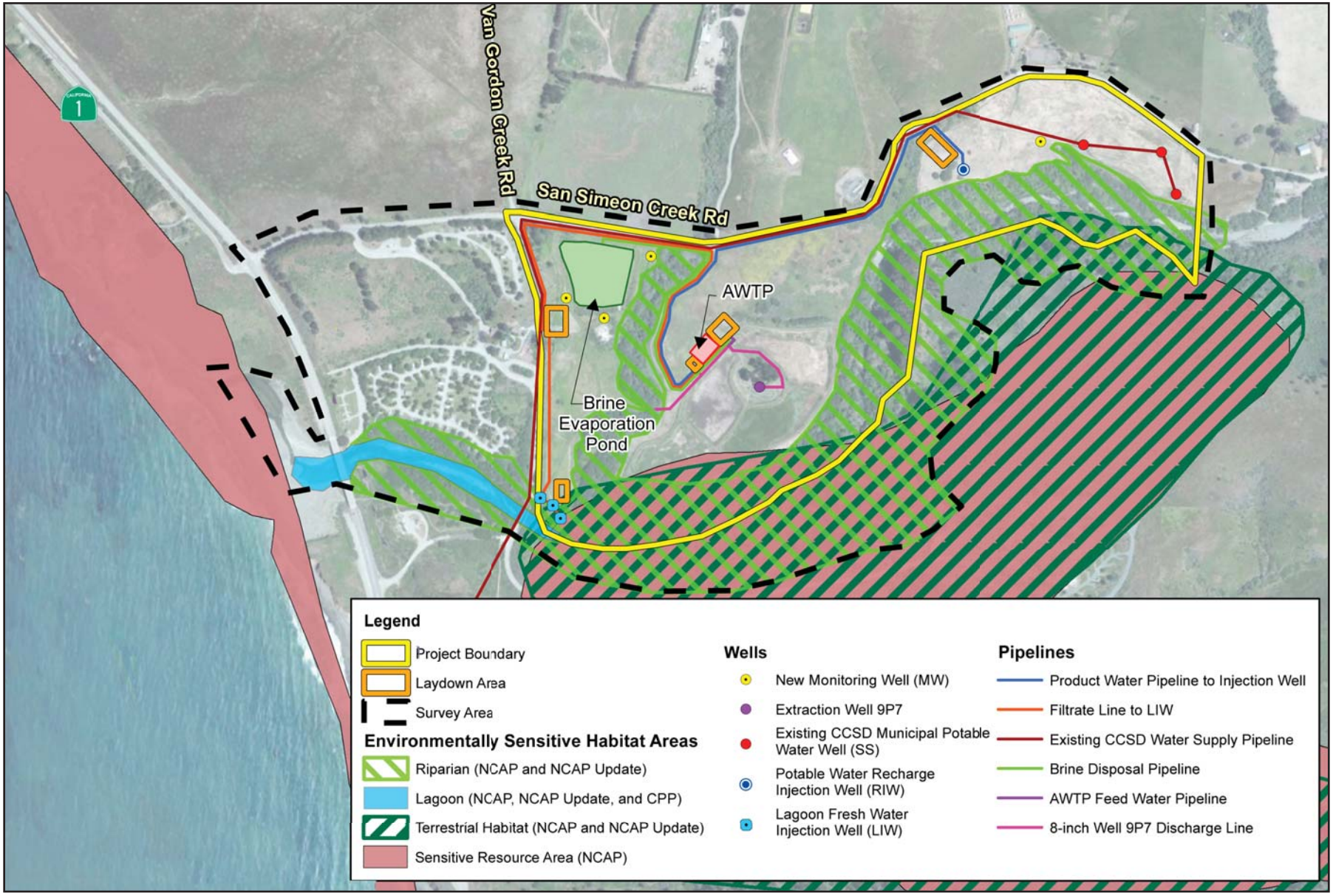

Source: CDM Smith, ESRI World Imagery Basemap.

NOT TO SCALE

RBF CONSULTING A Baker Company

06/14 • JN 141290

CAMBRIA EMERGENCY WATER SUPPLY PROJECT
INITIAL STUDY/MITIGATED NEGATIVE DECLARATION

Environmentally Sensitive Areas

Exhibit 4.4-4

The proposed water facilities are not located within any of these three SRAs. Because CZLUO Sections 23.07.160 to 23.07.166 only pertain to construction within SRAs, the Project would be in compliance with these sections and will not be discussed further.

Environmentally Sensitive Habitat Areas (CZLUO Section 23.07.170)

This CZLUO section dictates measures for construction located within or adjacent to (within 100 feet of the boundary of) ESHAs. The survey area contains several designated ESHAs (Exhibit 4.4-4), including the following:

- North Coast creeks/steelhead streams, including San Simeon Creek (designated by the NCAP);
- General riparian areas (e.g. Van Gordon Creek) (designated by the NCAP); and
- Wetlands (e.g. San Simeon Creek Lagoon) (LCP and NCAP).

The Project is located adjacent to and within 100 feet of both San Simeon Creek and Van Gordon Creek; therefore, Section 23.07.170 would be considered applicable. Only those subsections of Section 23.07.170 that are pertinent to the Project are discussed below.

Steelhead Stream Protection: Net Loss Stream Diversions Prohibited (CZLUO Section 23.07.170e(3))

Subsection 23.07.170e(3) of the CZLUO states that diversions of surface and subsurface water will not be allowed if they will result in a significant adverse impact on steelhead runs. This subsection applies to diversion dams, water supply wells that tap the subflow, and similar water supply facilities that could significantly harm steelhead runs. Exceptions may be considered only where impacts are unavoidable, are fully mitigated, and result in no significant disruption.

The Project proposes to extract 400 gpm of groundwater from the San Simeon Creek aquifer (via Well 9P7) upstream of San Simeon Creek Lagoon. The extracted water would be treated at the proposed AWTP and 300 gpm would be reinjected (via RIW) for subsequent distribution to Cambria.

While enough water may remain in the system with the Project as designed to continue supplying suitable habitat for steelhead runs, it is possible that over time, especially during dry periods, the surface water in San Simeon Creek may dry up quicker than it currently does, possibly resulting in a significant adverse effect to steelhead runs. Adult steelhead typically migrate from the ocean into coastal streams between December and May, according to weather patterns and stream flow. On the other hand, smolts (young steelhead that have prepared to migrate to the ocean) typically migrate downstream to lagoons and eventually the ocean between March and June, although low stream flows can block smolts from reaching their destinations. Reduced water in the lower reaches of San Simeon Creek could lead to earlier-than-usual sandbar closures in San Simeon Creek Lagoon, affecting the ability of smolts to migrate to the ocean and prematurely altering the lagoon/estuary temporal interchange.

To mitigate the extraction of groundwater, the Project proposes to return 100 gpm to the San Simeon Creek aquifer adjacent to the Lagoon (via LIWs or via existing Well 9P7 discharge pipeline directly into Van Gordon Creek adjacent to the AWTP). Therefore, the Project would result in diversions of water. The Project's hydrologic model primarily addresses the potential for Project-related groundwater impacts; see Section 4.9. However, it is unknown what specific connection there is between groundwater and the surface water in San Simeon Creek, San Simeon Lagoon, and the water flowing in from the Pacific Ocean. The modeling suggests that Project effects to the water budget would be limited. However, given the uncertainty that exists regarding the possible effects these actions may have on the supply of surface water in San Simeon Creek and San Simeon Creek Lagoon, monitoring of groundwater and surface water, as well as additional hydrologic modeling, is recommended to track changes in groundwater, surface water, and instream and riparian habitats. The monitoring would be conducted in order to remove remaining uncertainty and fully understand the effects of the proposed changes to the water budget. An AMP is proposed to gather the needed data and provide an oversight of uncertain effects of removing 300 gpm from the groundwater

adjacent to San Simeon Creek. The AMP would allow up to 150 gpm of water to be returned at either the LIWs or the discharge pipe, depending on stream conditions, to avoid potential adverse impacts. In addition to the AMP, Mitigation Measures are proposed to reduce Project impacts to less than significant. Based on the results of the biological monitoring, the AMP would provide measures to increase or decrease the amount of water injected or discharged back into San Simeon Creek and Lagoon. It is expected that the minimum amount of water returned at any time would be 100 gpm, but that when necessary based on biological monitoring, the amount of continual water would increase to 150 gpm.

Adaptive management measures, including biological monitoring, hydrologic monitoring and modeling would be implemented to demonstrate that the Project would be in compliance with this provision and an AMP is recommended to help avoid or reduce impacts to aquatic vertebrates.

Interference with Fish Migration (23.07.170e(4)(iv)

Subsection 23.07.170e(4)iv prohibits any development activity that would raise overall stream temperatures to unfavorable levels, or that would interfere with normal fish migration and movement within the stream. As stated above, the Project may result in decreased water levels in San Simeon Creek and, when applicable, Van Gordon Creek. If Project operations result in decreased water levels regularly, seasonally, or during particularly dry periods, the Project could result in increased water temperatures due to decreased water levels, as well as restrictions on fish migration and movement. The additional hydrologic information that will be gathered as part of the AMP (see BIO-6) is expected to demonstrate that the Project would be in compliance with this provision.

Grading Adjacent to Environmentally Sensitive Habitats (23.07.170e(5))

Subsection 23.07.170e(5) states that grading adjacent to ESHAs shall conform to the provisions of Section 23.05.034c, Grading Standards, which states that:

Grading shall not occur within 100 feet of any Environmentally Sensitive Habitat except:

c) Where a setback adjustment has been granted as set forth in Sections 23.07.172d(2) (Wetlands) or 23.07.174d(2) (Streams and Riparian Vegetation) of this title; or

d) Within an urban service line when grading is necessary to locate a principally permitted use and where the approval body can find that the application of the 100-foot setback would render the site physically unsuitable for a principally permitted use. In such cases, the 100-foot setback shall only be reduced to a point where the principally-permitted use, as modified as much as practical from a design standpoint, can be located on the site. In no case shall grading occur closer than 50 feet from the Environmentally Sensitive Habitat or as allowed by planning area standard, whichever is greater.

Based on current Project plans, there may be multiple proposed laydown yards that are within 100 feet of Van Gordon Creek and San Simeon Creek. If no grading is required within 100 feet of Van Gordon Creek or San Simeon Creek, the Project would be in compliance with this subsection. If grading is required, compliance with this subsection would be dependent on receiving authorization to grade within the 100-foot riparian buffer, as discussed below. Measures would be implemented through the County's development review process to ensure that the Project complies with this subsection.

Wetlands (CZLUO Section 23.07.172)

This section dictates measures for construction within or adjacent to (within 100 feet of the upland extent of) wetland areas. According to the NCAP, San Simeon Creek Lagoon is considered a wetland and an ESHA (see Exhibit 4.4-

4). Based on the habitat assessment, San Simeon Creek Lagoon is believed to extend to an area approximately 100 feet upstream (east) of Van Gordon Creek Road and approximately 230 feet downstream (west) of the confluence of San Simeon Creek and Van Gordon Creek, where the sides of the creek narrow slightly due to natural rock formations. Based on this extent, the Project would be located within 100 feet of the upland extent of the vegetation surrounding the lagoon in a previously disturbed ruderal area alongside Van Gordon Creek Road that is currently associated with an existing distribution alignment. Only those subsections of CZLUO Section 23.07.172 that are pertinent to the Project are discussed.

Location of Development (CZLUO Section 07.172a) and Wetland Setbacks (CZLUO Section 23.07.172d)

CZLUO Section 23.07.172a requires that development be placed as far away from the wetland as feasible, provided that other habitat values on the project site are not more adversely affected by moving it. CZLUO Section 23.07.172d requires a minimum setback of 100 feet from the upland extent of all wetlands. However, Subsection 07.172d(1) also allows certain permitted uses within this setback, including pipelines, given that the following findings can first be made:

- Alternative routes are infeasible or more environmentally damaging; and
- Adverse environmental effects are mitigated to the maximum extent feasible.

The Project proposes a pipeline, an injection well, and a laydown yard within 100 feet of a wetland. However, according to Subsection 07.172d(2), the minimum wetland setback can "in no case" be less than 25 feet. The proposed LIWs and pipeline must be located in proximity to the lagoon, in order to maintain water in the lagoon. Increasing the distance between the LIWs and the lagoon would be contrary to the Project's objective to maintain water in the lagoon. Therefore, alternative locations/routes would be infeasible. As concluded above, the Project's adverse environmental effects are mitigated to less than significant (to the maximum extent feasible). Compliance with this section would be verified through the County's development review process.

Riparian Setbacks (23.07.174d)

Subsection 23.07.174(d) discusses a required setback from riparian vegetation. In rural areas, such as where the Project is located, this setback is required to be a minimum of 100 feet from the upland edge of riparian vegetation. However, this subsection also allows certain permitted uses within this setback, including pipelines, and for the minimum setback to be adjusted, given that the following findings can first be made:

- Alternative locations and routes are infeasible or more environmentally damaging; and
- Adverse environmental effects are mitigated to the maximum extent feasible; and
- The adjustment is necessary to allow a principal permitted use of the property and redesign of the proposed development would not allow the use with the standard setbacks; and
- The adjustment is the minimum that would allow for the establishment of a principal permitted use.

The Project proposes laydown yards, sections of pipeline, LIWs, and MW-3 within 100 feet of the upland extents of Van Gordon Creek and San Simeon Creek. As concluded above, alternative locations/routes would be infeasible. Additionally, the Project's adverse environmental effects are mitigated to less than significant (to the maximum extent feasible). Compliance with this section would be verified through the County's development review process.

California Coastal Act of 1976

San Simeon Creek

San Simeon Creek traverses the southern portion of the Project site. San Simeon Creek is designated as an ESHA by the NCAP, the 1998 NCAP Update, and by the definition in Section 30107.5 of the Coastal Act; refer to Exhibit

4.4-4). Several protected species are known to occur and/or breed in this creek, including at the minimum steelhead, tidewater goby, California red-legged frog, western pond turtle, and two-striped garter snake. The Project would not be sited within San Simeon Creek, however, would be located near to it and in some areas within 100 feet of it. Development in the vicinity of this resource must demonstrate compliance with Sections 30231 and 30240 of the Coastal Act as noted above.

Section 30231

Under this section of the Coastal Act, the Project proponent must demonstrate that the Project would retain the biological productivity and quality of coastal streams (i.e. San Simeon Creek) and, where possible, restore them to better conditions. The Project is not located within the creek or within its upland terrestrial extent and is not expected to result in any direct impacts as a result of construction. However, the Project could result in indirect impacts to San Simeon Creek.

One of the methods suggested by Section 30231 for maintaining the biological integrity of water bodies is "preventing [the] depletion of ground water supplies and substantial interference with surface waterflow."

The Project proposes to extract 400 gpm of groundwater from the San Simeon Creek aquifer (via Well 9P7) upstream of San Simeon Creek Lagoon. The extracted water would be treated at the proposed AWTP and 300 gpm would be reinjected (via RIW) for subsequent distribution to Cambria. To mitigate the extraction of groundwater, the Project proposes to return 100 gpm to the San Simeon Creek aquifer adjacent to the Lagoon (via LIWs or via existing Well 9P7 discharge pipeline directly into Van Gordon Creek adjacent to the AWTP). Therefore, the Project would affect ground water supplies. As discussed above, an AMP is proposed to gather the needed data and provide an oversight of uncertain effects of removing 300 gpm from the groundwater adjacent to San Simeon Creek. The AMP would allow up to 150 gpm of water to be returned at either the LIWs or the discharge pipe, depending on stream conditions, to avoid potential adverse impacts. In addition to the AMP, Mitigation Measures are proposed to reduce Project impacts to less than significant. Based on the results of the biological monitoring, the AMP would provide measures to increase or decrease the amount of water injected or discharged back into San Simeon Creek and Lagoon. It is expected that the minimum amount of water returned at any time would be 100 gpm, but that when necessary based on biological monitoring, the amount of continual water would increase to 150 gpm. The AMP would be developed and mitigation incorporated to ensure that the Project would either be in compliance or adjusted to become compliant with Section 20231 for San Simeon Creek.

Section 30240

Because the Project is not located within San Simeon Creek, Section 30240a does not apply. However, under 30240b, the Project proponent must demonstrate that the Project would be sited and designed to prevent significant impacts to the creek and would be compatible with the continuance of the habitat. The Project is located within 100 feet of the upland extent of the riparian vegetation, and is currently designed to avoid direct impacts to the vegetation and the streambed. Construction may result in sedimentation, however, it is assumed that standard mitigation (e.g., BMPs) would reduce or eliminate the potential for sedimentation to enter the streambed; see Section 4.9. Based on the locations of the proposed pipeline and injection wells in relation to San Simeon Creek, it is not expected that removal of any riparian vegetation would be necessary during construction of the Project. Light tree trimming may be necessary in the immediate construction area to help facilitate construction of the pipeline, however, this would be mitigated through vegetation replacement or re-vegetation if considered a loss. The proposed lagoon injection wells where treated water would be injected back into the creek and the lagoon would result in additional ground impacts. It is not expected that the Project would have any direct significant impacts to the creek. As discussed above for Section 30231, it is possible that the Project may have indirect adverse impacts to the creek through depletion of groundwater. However, as discussed above, an AMP is proposed to gather the needed data and provide an oversight of the Project's effects. In addition to the AMP, Mitigation Measures are proposed to reduce Project impacts to less than significant. Based on the results of the biological monitoring, the AMP would provide measures

to increase or decrease the amount of water injected or discharged back into San Simeon Creek and Lagoon. The Project would not be located within the resource and would not result in the destruction or adverse modification of it. However, the Coastal Commission generally requires a habitat setback to prevent impacts that could degrade the resources; this setback, as with the CZLUO, is generally 100 feet. The LIW alternative does not comply with this, since it is located within 100 feet of the upland extent of this ESHA. The proposed LIWs and pipeline must be located in proximity to the lagoon, in order to maintain water in the lagoon. Increasing the distance between the LIWs and the lagoon would be contrary to the Project's objective to maintain water in the lagoon. Therefore, alternative locations/routes would be infeasible. The Project would be required to demonstrate compliance through the County's development review process.

San Simeon Creek Lagoon

San Simeon Creek Lagoon is located on the downstream end of San Simeon Creek. San Simeon Creek Lagoon is described as a stillwater wetland by the 1998 NCAP Update and is subsequently designated in the same document as an ESHA; refer to Exhibit 4.4-4. San Simeon Creek Lagoon is believed to extend to an area approximately 230 feet upstream (east) of Van Gordon Creek Road and approximately 100 feet downstream (west) of the confluence of San Simeon Creek and Van Gordon Creek, where the sides of the creek narrow slightly due to natural rock formations. Depending on the time of year and the water level in relation to the sandbar, the area may variably be a freshwater lagoon or a fresh/saltwater estuary. This area is used for spawning and/or rearing habitat by multiple species of fish, most significantly steelhead and tidewater goby. The Project would not be sited within San Simeon Creek Lagoon, however, would be located near to it. The proposed LIWs and pipeline must be located in proximity to the lagoon, in order to maintain water in the lagoon. Increasing the distance between the LIWs and the lagoon would be contrary to the Project's objective to maintain water in the lagoon. Therefore, alternative locations/routes would be infeasible. Development in the vicinity of this resource must demonstrate compliance with Sections 30231 and 30240 of the Coastal Act.

Section 30231

Under this section of the Coastal Act, the Project proponent must demonstrate that the Project will retain the biological productivity and quality of wetlands and estuaries (i.e. San Simeon Creek Lagoon) and, where possible, restore them to better conditions. The Project is not located within the creek or within its upland terrestrial extent and is not expected to result in any direct impacts as a result of construction. However, the Project could result in indirect impacts to the lagoon.

The Project could result in a net deficit of groundwater resources, however, that is currently unknown with available hydrologic data. During dry periods, especially during poor rainfall years, this could result in a premature reduction in both groundwater levels and the extent of the lagoon. During particularly wet years a potential reduction in average groundwater levels may be less significant, as during wet years the lagoon may extend over much of San Simeon State Beach. In dry years, such as 2014, the lagoon may be significantly reduced in size; during the habitat assessment, the extent of the lagoon on the beach was only a fraction of what is displayed in available historical imagery since 1994. In situations like this, a premature reduction in water levels and subsequent closure of the sandbar could result in decreased habitat quality for those species that depend on the lagoon. For instance, steelhead smolts attempting to migrate to sea could become stranded in the lagoon if water levels recede too soon. More information on the connection between groundwater, the surface water in San Simeon Creek and San Simeon Creek Lagoon, and the Pacific Ocean is required. As discussed above, an AMP is proposed to gather the needed data and provide an oversight of the Project's effects. In addition to the AMP, Mitigation Measures are proposed to reduce Project impacts to less than significant. Based on the results of the biological monitoring, the AMP would provide measures to increase or decrease the amount of water injected or discharged back into San Simeon Creek and Lagoon. Implementation of the AMP is proposed to ensure that the Project would either be in compliance or adjusted to become compliant.

Section 30240

Because the Project is not located within San Simeon Creek Lagoon, Section 30240a will not apply. However, under 30240b, the Project proponent must demonstrate that the Project will be sited and designed to prevent significant impacts to the lagoon and will be compatible with the continuance of the habitat. The LIW alternative of the Project is located within 100 feet of the upland extent of the riparian vegetation, and is currently designed to avoid direct impacts to the vegetation and the streambed. This does not include any lagoon-related vegetation (e.g., emergent vegetation) however, is instead a willow forest related to the general riparian corridor. Construction may result in sedimentation, however, it is assumed that standard mitigation (e.g., BMPs) would reduce or eliminate the potential for sedimentation to enter the lagoon. Based on the locations of the proposed pipeline and injection wells in relation to San Simeon Creek Lagoon, it is not expected that removal of any riparian vegetation would be necessary during construction of the Project. Light tree trimming may be necessary in the immediate construction area to help facilitate construction of the pipeline, however, this would be mitigated through vegetation replacement or re-vegetation if considered a loss. The proposed LIWs would result in additional ground impacts.

It is not expected that the Project would have any direct significant impacts to the lagoon. As discussed above for Section 30231, it is possible that the Project may have indirect adverse impacts to the lagoon through depletion of groundwater. However, more information on the connection between groundwater, the surface water in San Simeon Creek and San Simeon Creek Lagoon, and the Pacific Ocean is required. As discussed above, an AMP is proposed to gather the needed data and provide an oversight of the Project's effects. In addition to the AMP, Mitigation Measures are proposed to reduce Project impacts to less than significant. Based on the results of the biological monitoring, the AMP would provide measures to increase or decrease the amount of water injected or discharged back into San Simeon Creek and Lagoon. The AMP is proposed to ensure that the Project would be compatible with the continuance of this habitat. The Project would not be located within the resource and would not result in the destruction or direct adverse modification of it. The Coastal Commission generally requires a habitat setback to prevent impacts that could degrade the resources; this setback, as with the CZLUO, is generally 100 feet. The Project as designed would comply with this, as it is not located within 100 feet of the lagoon. Implementation of the AMP is proposed to ensure that the Project would either be in compliance or adjusted to become compliant with Section 30240b for San Simeon Creek Lagoon.

Van Gordon Creek

Van Gordon Creek traverses the western portion of the Project site, separating the percolation ponds from the brine evaporation pond and the LIW. Van Gordon Creek is designated as an ESHA by the 1998 NCAP Update ("Other Riparian"), and is designated as an ESHA ("Blueline Creeks & Streams") on the San Luis Obispo County "Coastal Zone Environmentally Sensitive Habitats" map available from the County website; refer to Exhibit 4.4-4. This creek is a tributary to San Simeon Creek, converging with it just upstream of the start of San Simeon Creek Lagoon. One alternative of the Project would be sited within Van Gordon Creek for water discharge, whereas the LIW alternative would restrict construction to within 100 feet of Van Gordon Creek however, not directly in the creek. Development in the vicinity of this resource must demonstrate compliance with Sections 30231 and 30240 of the Coastal Act.

Section 30231

Under this section of the Coastal Act, the Project proponent must demonstrate that the Project will retain the biological productivity and quality of coastal streams (i.e. Van Gordon Creek) and, where possible, restore them to better conditions. The Project is not located within the creek or within its upland terrestrial extent and is not expected to result in any direct impacts as a result of construction. However, the Project could result in indirect impacts to Van Gordon Creek.

One of the methods suggested by Section 30231 for maintaining the biological integrity of water bodies is "preventing [the] depletion of ground water supplies and substantial interference with surface waterflow." The Project proposes to extract 400 gpm of groundwater from the San Simeon Creek aquifer (via Well 9P7) upstream of San Simeon Creek Lagoon. The extracted water would be treated at the proposed AWTP and 300 gpm would be reinjected (via RIW) for subsequent distribution to Cambria. To mitigate the extraction of groundwater, the Project proposes to return 100 gpm to the San Simeon Creek aquifer adjacent to the Lagoon (via LIWs or via existing Well 9P7 discharge pipeline directly into Van Gordon Creek adjacent to the AWTP). Therefore, the Project would affect ground water supplies. More information on the connection between groundwater, the surface water in San Simeon Creek and San Simeon Creek Lagoon, and the Pacific Ocean is required. As discussed above, an AMP is proposed to gather the needed data and provide an oversight of the Project's effects. In addition to the AMP, Mitigation Measures are proposed to reduce Project impacts to less than significant. Based on the results of the biological monitoring, the AMP would provide measures to increase or decrease the amount of water injected or discharged back into San Simeon Creek and Lagoon. The AMP would retain or improve upon the biological productivity and quality of this creek. Alternatively, discharging water directly into Van Gordon Creek may help to improve the biological productivity. Implementation of the AMP is proposed to ensure that the Project would either be in compliance or adjusted to become compliant with Section 20231 for Van Gordon Creek.

Section 30240

One alternative would be located within Van Gordon Creek for water discharge, and therefore Section 30240a would apply to this alternative. Under Section 30240a, ESHAs must be protected against disruption of habitat values, and only uses dependent on the ESHAs are allowed within them. Under the discharge pipeline alternative, an existing pipeline would be located within the creek. This pipeline, although it is already permitted for discharges, is not dependent on Van Gordon Creek. However, construction and operation of the pipeline presumably would have already been authorized under the Coastal Act prior to being permitted, and therefore the discharge pipeline alternative is presumed to be in compliance with Section 30240a.

Under Section 30240b, the Project proponent must demonstrate that the Project will be sited and designed to prevent significant impacts to the creek and will be compatible with the continuance of the habitat. Both alternatives are located within 100 feet of the upland extent of the riparian vegetation, and are currently designed to avoid direct impacts to the vegetation and the streambed. Although the discharge pipeline alternative is directly within the streambed, the pipeline is already constructed and intermittently in use, and therefore would not require any additional construction. Upland construction of either alternative may result in sedimentation, however, it is assumed that standard mitigation (e.g., BMPs) would reduce or eliminate the potential for sedimentation to enter the streambed. Based on the locations of the proposed pipeline and injection wells in relation to Van Gordon Creek, it is not expected that removal of any riparian vegetation would be necessary during construction of the Project. Light tree trimming may be necessary in the immediate construction area to help facilitate construction of the new pipelines, however, this would likely be mitigated through vegetation replacement or re-vegetation if considered a loss. Under the LIW alternative, construction of the proposed lagoon injection wells would result in additional ground impacts. The brine evaporation pond is proposed in proximity to Van Gordon Creek, however, would be located with an existing basin that is below the creek; use of the pond is not expected to directly affect the creek.

It is not expected that the Project would have any direct significant impacts to the creek. As discussed above for Section 30231, it is possible that the Project may have indirect adverse impacts to the creek through depletion of groundwater. More information on the connection between groundwater, the surface water in San Simeon Creek and San Simeon Creek Lagoon, and the Pacific Ocean is required. As discussed above, an AMP is proposed to gather the needed data and provide an oversight of the Project's effects. In addition to the AMP, Mitigation Measures are proposed to reduce Project impacts to less than significant. Based on the results of the biological monitoring, the AMP would provide measures to increase or decrease the amount of water injected or discharged back into San Simeon Creek and Lagoon. The Project would not result in the destruction or direct adverse modification of it. However, the Coastal Commission generally requires a habitat setback to prevent impacts that could degrade the

resources; this setback, as with the CZLUO, is generally 100 feet. Several pipeline features and a monitoring well are located within 100 feet of the upland extent of this ESHA. The Project would be required to demonstrate compliance with Section 30240b for Van Gordon Creek through the County review process.

Monterey Pine Forests

A Monterey pine forest is located offsite on the southern end of the survey area, on the southern slopes of San Simeon Creek. This area is designated as an ESHA ("Terrestrial Habitat") on the San Luis Obispo County "Coastal Zone Environmentally Sensitive Habitats" map available from the County website; refer to Exhibit 4.4-4. Monterey pine is designated by the CNPS with the Rare Plant Rank 1B.1, indicating that is rare, threatened, or endangered in California and elsewhere, and is seriously endangered in California. Furthermore, "Monterey Pine Forest" is considered a sensitive habitat by the CNDDB. However, the Project is not expected to have any direct or indirect impacts on the formally-mapped Monterey pine forest ESHA located on the south side of San Simeon Creek. The trees are all located in the upland on slopes and bluffs above the creek and are not expected to be affected by construction and operation of the Project. The Project is expected to be in compliance with Section 30240 of the Coastal Act in protecting this ESHA.

However, a small stand of Monterey pines is located within the percolation ponds, and Well 9P7 is located within however, near the southern end of this stand. This is not a mapped ESHA. However, for purposes of this analysis, this area is treated below as if it is an unmapped ESHA.

Section 30240

The Project is located both within and adjacent to this small stand of Monterey pines and is thus subject to both Sections 30240a and 30240b. To show compliance with Section 30240a, the Project proponent must demonstrate that the Project will not disrupt the habitat values of these trees and that it is dependent on this resource. While the existing Well 9P7 is located within the stand of trees, it is located near the southern end of them. The Project as designed shows the pipeline exiting the trees to the west and circumventing them to reach the AWTP. The pipeline is not proposed to be constructed through the stand of trees.

To show compliance with Section 30240b, the Project proponent must demonstrate that the Project is designed to prevent effects that may significantly degrade the habitat, and is compatible with the continuance of the habitat. As stated above, the pipeline has been sited to exit and go around the pine stand, rather than through it. While siting the pipeline through the trees could have significant adverse effects and result in degradation of the habitat, siting the pipeline around the stand avoids major direct impacts and is expected to avoid any major habitat degradation. Because the pipeline would have minimal direct effects and would not cause any significant degradation of this habitat, it can be considered to be compatible with the continuance of the habitat.

EXISTING REGULATIONS

Refer to Response Nos. 4.4.a., 4.4.b., and 4.4.d above.

MITIGATION MEASURES

Refer to Response Nos. 4.4.a., 4.4.b., and 4.4.d above.

4.4.f Conflict with the provisions of an adopted Habitat Conservation Plan, Natural Community Conservation Plan, or other approved local, regional, or state habitat conservation plan?

No Impact. The Project would not conflict with the provisions of an adopted Habitat Conservation Plan, Natural Community Conservation Plan, or other approved local, regional, or state Habitat Conservation Plan. There are

currently no Habitat Conservation Plans that pertain to the Project site. The Project site is located outside of the nearby Hearst Ranch Conservation Plan. Therefore, the Project would not conflict with the provisions of any local, regional, or state Habitat Conservation Plans.

EXISTING REGULATIONS

Refer to Response Nos. 4.4.a., 4.4.b., and 4.4.d above.

MITIGATION MEASURES

No mitigation is required.

This page intentionally left blank.

4.5 CULTURAL RESOURCES

The cultural resources analysis presented below is based on information presented in the Cultural Resources Assessment for the Cambria Emergency Water Project (CRA) (Cogstone, June 2014); refer to Appendix C, *Cultural Resources Assessment*. The purpose of the CRA was to determine the Project's potential effects on paleontological, archaeological, and historic resources. The Regulatory Environment, Background, Geological Setting, Stratigraphy, Natural Setting, Prehistoric Setting, Native Americans at Contact and Historic Setting discussions are found in *Appendix C*, pages 5 to 15.

Would the project:	Potentially Significant Impact	Less Than Significant With Mitigation Incorporated	Less Than Significant Impact	No Impact
a. Cause a substantial adverse change in the significance of a historical resource as defined in CEQA Guidelines §15064.5?		✓		
b. Cause a substantial adverse change in the significance of an archaeological resource pursuant to CEQA Guidelines §15064.5?		✓		
c. Directly or indirectly destroy a unique paleontological resource or site or unique geologic feature?		✓		
d. Disturb any human remains, including those interred outside of formal cemeteries?			✓	

EXISTING CONDITIONS

Archaeological and Historical Records Search

California Historic Resources Inventory System

A search for archaeological and historical records was completed by Cogstone at the Central Coast Information Center (CCIC) of the California Historic Resources Inventory System (CHRIS) on April 28, 2014. The records search covered the entire Project site plus a 0.5-mile radius.

Table 4.5-1, *Previous Studies Within a 0.5-Mile Radius of the Project*, lists the previous studies within a 0.5-mile radius of the Project site. As indicated in Table 4.5-1, eight cultural resource studies were previously conducted that included parts of the Project site/were within a 0.5-mile radius of the site.

Table 4.5-2, *Archaeological and Historic Resources Within a 0.5-Mile Radius of the Project*, lists the archaeological and historic resources within a 0.5-mile radius of the Project site identified through the records search. As indicated in Table 4.5-2, the results of previously conducted studies indicate there are five cultural resources within the Project site: three prehistoric sites; and two multi-component sites. As also indicated in Table 4.5-2, the results of previously conducted studies indicate 15 cultural resources have been previously documented outside of the Project site, within a 0.5-mile radius: ten prehistoric sites; two historic sites; two multi-components sites; and one historic built environment resource.

Table 4.5-1
Previous Studies Within a 0.5-Mile Radius of the Project

Author	Doc No. (E-)	Title	Date	Quad	Distance from Project
Hoover, R.	45	Archaeological Component for the Cambria Wastewater and Sewage Disposal Project Environmental Impact Report	1974	Cambria	Within Project site
Greenwood, R.	76	Culture Resource Management Study for the Hearst Ranch	1976	Pico Creek, Cambria	Within Project site
Gibson, R.	171	Archaeological investigations at SLO-187B; A Mitigation for Cambria Water Transmission Facilities at San Simeon Creek/Van Gordon Road, San Luis Obispo County, CA	1979	Cambria	Within Project site
Gibson, R.	732	Archaeological investigations at SLO-187B, a mitigation project for Cambria water transmission facilities at San Simeon Creek/Can Gordon Road, San Luis Obispo County	1983	Cambria	Within Project site
Gibson, R.	2183	Results of the Archaeological Subsurface Testing at SLO-221 and SLO-1373, San Simeon Creek, San Luis Obispo County	1992	Cambria	Within Project site
Breschini, G.	2305	Impact Assessment of Expanded Waste Water Facilities Adjacent to San Simeon Creek, San Luis Obispo County, CA. Subsurface Testing: Cambria Community Services District Waste Water Treatment Facility	1991	Cambria	Within Project site
Gibson, R.	3722	Archaeological Resources Inventory for the Cambria Community Services District Effluent Disposal Field Improvements, San Simeon Creek, San Luis Obispo County, California	1994	Cambria	Within Project site
Jones, D. et al.	4753	San Simeon State Park Archaeological Site Assessment:2001	2002	Pico Creek, Cambria	Within Project site

Table 4.5-2
Archaeological and Historic Resources Within A 0.5-Mile Radius of the Project

Trinomial (CA-SLO-)	Primary No. (P-40-)	Description	Quad	Distance from Project
72	72	Prehistoric shallow midden with sparse shell, temporary camp area	Pico Creek, Cambria	Within 0.5 Mile
185	185	Prehistoric bedrock mortars and small midden deposit	Cambria	Within 0.5 Mile
186	186	Prehistoric midden deposit (village site)	Cambria	Within 0.5 Mile
187	187	Prehistoric open village site as indicated by midden deposit	Cambria	Onsite
188	188	Prehistoric bedrock mortar on outcrop of hard metamorphic rock	Cambria	Within 0.5 Mile
221	221	Multi-component agricultural area showing surface indications of roofing tile fragments, and many lithic artifacts (Mission San Miguel Estancia?)	Cambria	Onsite
229	229	Prehistoric large occupation site	Pico Creek, Cambria	Within 0.5 Mile
378	378	Prehistoric large permanent camp Site	Cambria	Onsite
383	383	Prehistoric sparse lithic scatter	Pico Creek, Cambria	Within 0.5 Mile
799	799	Prehistoric bedrock mortar	Cambria	Within 0.5 Mile
800	800	Multi-components foundation with historic and prehistoric artifact scatters	Cambria	Within 0.5 Mile
966	966	Historic cabin foundation and associated retaining walls	Cambria	Within 0.5 Mile
967H	967	Historic foundation, trail markers and historic scatter (Whitaker Ranch complex)	Cambria	Within 0.5 Mile
1373	1373	Multi-components extensive midden deposit with shellfish remains, lithics, groundstone and bone. Proto- Historic adobe and Historic scatters	Cambria	Onsite
1374	1374	Prehistoric bedrock mortars and shell fragments	Cambria	Onsite
1551	1551	Multi-component sparse historic and prehistoric scatter of shell, glass, porcelain, brick and few lithics	Cambria	Within 0.5 Mile
1554	15534	Prehistoric sparse lithic scatter	Cambria	Within 0.5 Mile
2197	2197	Prehistoric lithic and groundstone scatter including one steatite pendant	Cambria	Within 0.5 Mile
ISO-36	38036	Prehistoric unifacially worked cobble, core tool	Cambria	Within 0.5 Mile
	40842	Historic steel bridge	Cambria	Within 0.5 Mile

Paleontological Resources Record Search

A search for paleontological records was performed on behalf of Cogstone by the University of California Museum of Paleontology (UCMP). Cogstone staff conducted additional searches in the Paleobiology Database (PBDB) and literature. No fossils are recorded within or in the immediate vicinity of the Project site (UCMP 2014). However, fossils have been recovered from similar sediments in other areas of the County. While the majority of the Franciscan Assemblage is unfossiliferous, it has produced rare, scientifically significant fossils.

Native American Consultation

A Sacred Lands File search was requested from the Native American Heritage Commission (NAHC) on April 24, 2014. On April 29th, the NAHC replied that there are no known sacred lands within 0.5 mile of the Project site, and provided a list of seven Native American tribes or individuals to contact for further information regarding the general Project vicinity (see Appendix B of Appendix C). Ms. Patti Dunton, of the Salinan Tribe of Monterey and San Luis Obispo County, responded on May 13, 2014, stating that the Tribe has concerns that the Project has the potential to impact known cultural resources within the Project site around San Simeon Creek. Ms. Dunton requested that a monitor be present during any ground disturbance activities; see Appendix B of Appendix C. No additional responses have been received.

Survey Methods

The reconnaissance stage is important to verify the exact location of each cultural resource, the condition or integrity of the resource, and the proximity of the resource to areas of sensitivity. Cogstone completed an intensive-level pedestrian survey of the Project site on May 9, 2014. The survey consisted of walking the Project site in parallel transects spaced at approximately 15-meter intervals, while closely inspecting the ground surface.

Archaeological and Historical Survey Results

Ground surface visibility was nonexistent to poor in portions of the Project site due to dense vegetation (see CRA Figure 6). Locating previously recorded sites within these areas was impossible. In areas with fair ground surface visibility, cultural materials were observed at the surface at archaeological sites CA-SLO-187, CA-SLO-221, CA-SLO-378, and CA-SLO-1373.

Ground surface visibility at CA-SLO-187 was poor due to extremely dense vegetation. A small number of flakes were observed at the surface. Previous site records describe the site as a prehistoric open village site as indicated by midden deposit.

Ground surface visibility at CA-SLO-221 was poor due to extremely dense vegetation. One adobe brick fragment was found within the site boundary adjacent to where the AWTP feed water pipeline is proposed. Previous site records describe CA-SLO-221 as a protohistoric site with an outpost from Mission San Miguel. The site has been disturbed by roads, levees, and artificial ponds or basins.

Ground surface visibility at CA-SLO-378 was poor due to extremely dense vegetation. A small number of flakes were observed at the surface along where the product water pipeline to injection wells and the AWTP feed water pipeline to the LIWs are proposed. CA-SLO-378 is a large permanent prehistoric campsite. A large amount of material including choppers, scrapers, broken bowls, and manos have previously been recovered from the site but no subsurface testing has been conducted. The area has been previously disturbed by roads, a house, and the Van Gordon Reservoir.

Ground surface visibility at CA-SLO-1373 was fair and the site appears to be relatively intact. A small amount of ceramic, glass, clams, and faunal bone was visible at the surface (see CRA Figure 9). Previous site records describe the site as a multi-component site with an extensive midden deposit containing lithics, marine shell, Fire Affect Rock, soapstone, and olivella shells. Other site components include a Proto-Historic adobe and Historic artifact scatters.

Ground surface visibility at CA-SLO-1374 was fair but no cultural materials were observed. Previous site records describe the site as a Prehistoric site consisting of bedrock mortars and shell fragments.

Paleontological Survey Results

No paleontological resources are known within the Project site or its immediate vicinity.

IMPACT ANALYSIS

4.5.a Cause a substantial adverse change in the significance of a historical resource as defined in CEQA Guidelines §15064.5?

4.5.b Cause a substantial adverse change in the significance of an archaeological resource pursuant to CEQA Guidelines §15064.5?

Less Than Significant With Mitigation Incorporated. Archaeological and historical resources are considered to be significant if they possess integrity and may contribute information important in prehistory or history. Based on the prior research and survey results, the potential to impact resources is discussed below.

There are five previously recorded archaeological resources within the Project site; see Table 4.5-1. Construction of the above ground pipelines is not anticipated to substantively impact these cultural resources. The proposed LIWs and construction staging area would be within the boundary of site CA-SLO-378 and are expected have an impact on this site. The AWTP is at the northern edge of CA-SLO-221 and the western portion of the AWTP is within the boundary of site CA-SLO-1373. The construction access road to the AWTP passes through sites CA-SLO-1373 and CA-SLO-221; see Exhibit 2-12, *Construction Laydown/Staging Areas*. Grading, trenching and excavations in these areas may adversely impact these sites. Therefore, the Project could cause a substantial adverse change in the significance of a historical or archaeological resource. However, the Project would be subject to compliance with LCP Policies that address protection of archaeological resources: LCP 1 addresses protection of archaeological resources; LCP 3 requires a preliminary survey; and LCP 5 addresses mitigation techniques where substantial archaeological resources are found. These LCP Policies are implemented through compliance with the CZLUO. Pursuant to CZLUO Section 23.07.104.3, archaeologically sensitive areas include any parcel containing a known archaeological site recorded by the California Archaeological Site Survey Office. As discussed above, the Project site contains known archaeological sites, thus, is considered an archaeologically sensitive area. CZLUO Section 23.07.104.c specifies that if the preliminary site survey determines that proposed development may have significant effects on existing archaeological resources, a mitigation plan is required by a qualified archaeologist. The CRA recommends that, prior to the start of construction, earthmoving personnel receive a cultural sensitivity training detailing the types of artifacts and fossils that may be encountered and procedures to follow if finds occur. The CRA also recommends that a qualified archaeologist and Native American monitor be present for drilling, grading, trenching, excavation and any other subsurface impacts within the boundaries of previously recorded sites (CA-SLO-378, CA-SLO-187, CA-SLO-1373, and CA-SLO-221) in the areas of the AWTP and LIWs; see Mitigation Measure CUL-1. The Project is anticipated to have a negligible impact on cultural resources outside of the AWTP and LIW areas. Additionally, the Project is subject to compliance with CZLUO Section 23.07.104.d, which specifies that Section 23.05.140 standards would apply in the event archeological resources are unearthed or discovered during any construction activities; see *Existing Regulations* below. Compliance with LCP Policies 1, 3, and 5 would be achieved through compliance with the CZLUO and recommended mitigation measures. Following compliance with

the LCP, CZLUO, and recommended mitigation measures, the Project would result in a less than significant impact on historical and archaeological resources.

EXISTING REGULATIONS

Local Coastal Program Policies:

LCP 1 Protection of Archaeological Resources. The county shall provide for the protection of both known and potential archaeological resources. All available measures, including purchase, tax relief, purchase of development rights, etc., shall be explored at the time of a development proposal to avoid development on important archaeological sites. Where these measures are not feasible and development will adversely affect identified archaeological or paleontological resources, adequate mitigation shall be required.

LCP 3 Identification of Archaeological Sites. Development within an archaeological sensitive areas shall not occur until a preliminary site survey is conducted for the site, and if necessary, mitigation measures implemented.

LCP 5 Mitigation Techniques for Preliminary Site Survey Before Construction. Where substantial archaeological resources are found as a result of a preliminary site survey before construction, the county shall require a mitigation plan to protect the site. Some examples of specific mitigation techniques include:

a. Project redesign could reduce adverse impacts of the project through relocation of open space, landscaping or parking facilities.

b. Preservation of an archaeological site can sometimes be accomplished by covering the site with a layer of fill sufficiently thick to insulate it from impact. This surface can then be used for building that does not require extensive foundations or removal of all topsoil.

c. When a project impact cannot be avoided, it may be necessary to conduct a salvage operation. This is usually a last resort alternative because excavation, even under the best conditions, is limited by time, costs and technology. Where the chosen mitigation measure necessitates removal of archaeological resources, the county shall require the evaluation and proper deposition of the findings based on consultation with a qualified archaeologist knowledgeable in the Chumash culture.

d. A qualified archaeologist knowledgeable in the Chumash culture may need to be on-site during initial grading and utility trenching for projects within sensitive areas.

Coastal Zone Land Use Ordinance Standards:

CZLUO Chapter 23.04.200 (Protection of Archaeological Resources Not Within the Archaeologically Sensitive Areas Combining Designation). All development applications that propose development that is not located within the Archaeologically Sensitive Areas combining designation and that meets the following location criteria shall be subject to the standards for the Archaeologically Sensitive Areas Combining Designation in Chapter 23.07: development that is either within 100 feet of the bank of a coastal stream (as defined in the Coastal Zone Land Use Ordinance), or development that is within 300 feet of such stream where the slope of the site is less than 10 percent. (NOTE: Project is within 100 feet of stream; therefore subject to Chapter 23.07).

CZLUO Chapter 23.05.140 (Archeological Resources Discovery). In the event archeological resources are unearthed or discovered during any construction activities, the following standards apply:

a. Construction activities shall cease, and the Environmental Coordinator and Planning Department shall be notified so that the extent and location of discovered materials may be recorded by a qualified archeologist, and disposition of artifacts may be accomplished in accordance with state and federal law.

b. In the event archeological resources are found to include human remains, or in any other case when human remains are discovered during construction, the County Coroner is to be notified in addition to the Planning Department and Environmental Coordinator so that proper disposition may be accomplished.

CZLUO Chapter 23.07.104 (Archaeologically Sensitive Areas). To protect and preserve archaeological resources, the following procedures and requirements apply to development within areas of the coastal zone identified as archaeologically sensitive.

a. Archaeologically sensitive areas. The following areas are defined as archaeologically sensitive:

    1. Any parcel within a rural area which is identified on the rural parcel number list prepared by the California Archaeological Site Survey Office on file with the county Planning Department.

    2. Any parcel within an urban or village area which is located within an archaeologically sensitive area as delineated by the official maps (Part III) of the Land Use Element.

    3. Any other parcel containing a known archaeological site recorded by the California Archaeological Site Survey Office.

b. Preliminary site survey required. Before issuance of a land use or construction permit for development within an archaeologically sensitive area, a preliminary site survey shall be required. The survey shall be conducted by a qualified archaeologist knowledgeable in local Native American culture and approved by the Environmental Coordinator. The County will provide pertinent project information to the Native American tribe(s).

c. When a mitigation plan is required. If the preliminary site survey determines that proposed development may have significant effects on existing, known or suspected archaeological resources, a plan for mitigation shall be prepared by a qualified archaeologist. The County will provide pertinent project information to the Native American tribe(s) as appropriate. The purpose of the plan is to protect the resource. The plan may recommend the need for further study, subsurface testing, monitoring during construction activities, project redesign, or other actions to mitigate the impacts on the resource. Highest priority shall be given to avoiding disturbance of sensitive resources. Lower priority mitigation measures may include use of fill to cap the sensitive resources. As a last resort, the review authority may permit excavation and recovery of those resources. The mitigation plan shall be submitted to and approved by the Environmental Coordinator, and considered in the evaluation of the development request by the Review Authority.

d. Archeological resources discovery. In the event archeological resources are unearthed or discovered during any construction activities, the standards of Section 23.05.140 of this title shall apply. Construction activities shall not commence until a mitigation plan, prepared by a qualified professional archaeologist reviewed and approved by the Environmental Coordinator, is completed and implemented. The County will provide pertinent project information to the affected Native American tribe(s) and consider comments prior to approval of the mitigation plan. The mitigation plan shall include measures to avoid the resources to the maximum degree feasible and shall provide mitigation for unavoidable impacts. A report verifying that the approved mitigation plan has been completed shall be submitted to the Environmental Coordinator prior to occupancy or final inspection, whichever occurs first.

MITIGATION MEASURES

CUL-1 Prior to the start of construction, earthmoving personnel shall receive a cultural and paleontological sensitivity training detailing the types of artifacts and fossils that may be encountered and procedures to follow if finds occur.

CUL-2 The Applicant shall retain qualified archaeological monitor and Native American monitor, approved by the County Environmental Coordinator, to be present during all site disturbance activities within the boundaries of previously recorded sites. Monitoring reports shall be retained by the Applicant and shared with the Environmental Coordinator's Office upon request.

4.5.c Directly or indirectly destroy a unique paleontological resource or site or unique geologic feature?

Less Than Significant With Mitigation Incorporated. The Holocene alluvial deposits are not sensitive for fossil resources due to their young age and are given a Potential Fossil Yield Classification (PFYC) sensitivity ranking of two or low. Vertebrate fossils are known to occur intermittently, however, with low predictability in the Franciscan Assemblage and Pleistocene marine terrace deposits resulting in a PFYC ranking of 3a or moderate sensitivity.

Ground disturbance activities for the construction of wells include drilling between 40 and 100 feet in depth. Additionally, installation of the impermeable liner at the evaporation pond would require removal of vegetation. Nominal excavation would be necessary for the proposed AWTP, since it would be within a container. Yard piping would be installed below ground, under the AWTP. Additionally, no excavation would be necessary for the proposed conveyance pipelines, since they would be above ground.

While well excavations could encounter fossil bones or other materials from any of the sensitive sediments identified in the Project site, due to the method of excavation, the specimens would lack context that is critical to scientific significance. These types of unprovenanced fossils would only be significant if they result in identification of new species that are currently not known in the area. If they are identified as already-known species, they would be suitable for educational uses. Excavation for the proposed AWTP is not anticipated to be deep enough to impact paleontologically sensitive sediments.

No paleontological resources are known within the Project or the immediate vicinity. However, the Franciscan Assemblage, which may be encountered at depth, and Pleistocene marine deposits similar to those within the Project site have produced significant paleontological resources within San Luis Obispo County. The Holocene alluvium is not sensitive for fossils, but may be underlain by older, paleontologically sensitive sediments at depth. No fossils meeting significance criteria are anticipated from the deep well excavations due to lack of context of any recovered material. All other excavations are anticipated to be shallow and would not impact paleontologically sensitive sediments. Based on the results of the CRA, the Project is anticipated to have a negligible impact on paleontological resources. Therefore, less than significant impact would occur in this regard. To further minimize potential impacts on paleontological resources, the Project would be subject to compliance with LCP Policy 1, which addresses protection of paleontological resources. Compliance with LCP Policy 1 would be achieved through compliance with recommended Mitigation Measure CUL-1, which addresses sensitivity training. Following compliance with CUL-1, the Project would result in a less than significant impact on paleontological resources.

EXISTING REGULATIONS

Local Coastal Program Policies: See Policy LCP 1 above.

MITIGATION MEASURES

See Mitigation Measure CUL-1 above.

4.5.d Disturb any human remains, including those interred outside of formal cemeteries?

Less Than Significant Impact. The probability that Project construction would impact any human remains appears to be remote, given the degree of past disturbance of the site. Notwithstanding, ground-disturbing activities, such as grading or excavation, could disturb human remains. In the event that human remains are encountered during earth removal or disturbance activities, Health and Safety Code Section 7050.5 requires that all activities cease immediately and a qualified archaeologist and Native American monitor be contacted immediately. The Coroner would also be contacted pursuant to Public Resources Code Sections 5097.98 and 5097.99. Should the Coroner determine the human remains to be of Native American descent, the coroner has 24 hours to notify the Native American Heritage Commission (NAHC). The NAHC would then be required to contact the most likely descendant of the deceased Native American, who would then serve as consultant on how to proceed with the remains. Further, the Project would be subject to compliance with CZLUO standards and Mitigation Measures CUL-1 and CUL-2. Compliance with the established regulatory framework (i.e., California Health and Safety Code Section 7050.5, Public Resources Code Section 5097.98, CZLUO standards) and recommended mitigation would reduce potential impacts to less than significant.

EXISTING REGULATIONS

Local Coastal Program Policies: See Policy LCP 1, 3, and 5 above.

Coastal Zone Land Use Ordinance Standards: See CZLUO Sections 23.04.200, 23.05.140, and 23.07.104 above.

MITIGATION MEASURES

See CUL-1 and CUL-2 above.

This page intentionally left blank.

4.6 GEOLOGY AND SOILS

Would the project:	Potentially Significant Impact	Less Than Significant With Mitigation Incorporated	Less Than Significant Impact	No Impact
a. Expose people or structures to potential substantial adverse effects, including the risk of loss, injury, or death involving:				
1) Rupture of a known earthquake fault, as delineated on the most recent Alquist-Priolo Earthquake Fault Zoning Map issued by the State Geologist for the area or based on other substantial evidence of a known fault? Refer to Division of Mines and Geology Special Publication 42.				✓
2) Strong seismic ground shaking?			✓	
3) Seismic-related ground failure, including liquefaction?				✓
4) Landslides?			✓	
b. Result in substantial soil erosion or the loss of topsoil?			✓	
c. Be located on a geologic unit or soil that is unstable, or that would become unstable as a result of the project, and potentially result in on-or off-site landslide, lateral spreading, subsidence, liquefaction or collapse?			✓	
d. Be located on expansive soil, as defined in Table 18-1-B of the Uniform Building Code (1994), creating substantial risks to life or property?			✓	
e. Have soils incapable of adequately supporting the use of septic tanks or alternative waste water disposal systems where sewers are not available for the disposal of waste water?				✓

IMPACT ANALYSIS

4.6.a.1 Expose people or structures to potential substantial adverse effects, including the risk of loss, injury, or death involving rupture of a known earthquake fault, as delineated on the most recent Alquist-Priolo Earthquake Fault Zoning Map issued by the State Geologist for the area or based on other substantial evidence of a known fault?

No Impact. The Alquist-Priolo Earthquake Fault Zoning Act was passed in 1972 to mitigate the hazard of surface faulting to structures for human occupancy. The Act's main purpose is to prevent the construction of buildings used for human occupancy on the surface trace of active faults. The Act requires the State Geologist to establish regulatory zones, known as "Earthquake Fault Zones," around the surface traces of active faults and to issue appropriate maps. As indicated in the State of California Special Studies Zones Map - San Simeon Quadrangle (July 1, 1986), the Project site is not affected by a State-designated Earthquake Fault Zone.[1] Therefore, the Project would not expose people or structures to potential substantial adverse effects involving rupture of a known earthquake fault.

[1] State of California, Department of Conservation, California Geological Survey, http://www.quake.ca.gov/gmaps/WH/regulatorymaps.htm, Accessed May 27, 2014.

MITIGATION MEASURES

No mitigation is required.

4.6.a.2 Expose people or structures to potential substantial adverse effects, including the risk of loss, injury, or death involving strong seismic ground shaking?

Less Than Significant Impact. According to the SLO County General Plan Safety Element (page 17), San Luis Obispo County is located in a geologically complex and seismically active region. Strong ground shaking resulting from fault movement is one direct effect from an earthquake. The Safety Element concludes that seismic/earthquake-related hazards have the potential to result in significant public safety risks and property damage.

Earthquakes on regional and/or local causative faults could expose people or the proposed water facilities to strong seismic ground shaking. The intensity of ground shaking on the Project site would depend upon the magnitude of the earthquake, distance to the epicenter, and the geology of the area between the epicenter and the Project site. Numerous controls would be imposed on the Project through the permitting process. These controls include those that pertain to the Project site's Geologic Study Area (GSA) Combining Designation (see Coastal Zone North Coast Planning Area Rural Combining Designation Map[2]), which is assigned to geologic hazard areas with moderate to high landslide risk potential and/or moderate to high liquefaction hazard potential; see Responses 4.6.a.3 and 4.6.a.4 below. In general, the County regulates development (and reduces potential seismic and geologic impacts) under requirements of the LCP, CZLUO, and San Luis Obispo County Code Title 19, known as the San Luis Obispo County Building and Construction Ordinance (BCO). These regulations were established to protect and promote the public health, safety, and welfare. The Project is subject to compliance with the relevant LCP Policies that address geologic stability: LCP 1 requires that the Project be designed to minimize risks to human life and property; LCP 2 requires that the new development ensure structural stability while not creating or contributing to erosion or geological instability; and LCP 3 requires a detailed review of development proposed within the GSA, which provides recommendations and conclusions consistent with the LCP. Compliance with the BCO, which is intended to regulate the design and construction of buildings and structures through basic standards, is required. Compliance with CZLUO Section 23.07.084, *Application Content - Geologic and Soils Report Required*, which specifies that all land use permit applications for projects located within a GSA be accompanied by a report prepared by a certified engineering geologist and/or registered civil engineer (as to soils engineering), is also required. The report would identify criteria for corrective measures when necessary and provide recommendations regarding the effect of geologic conditions on the proposed development. Compliance with LCP Policies 1, 2, and 3 would be achieved through compliance with the BCO and CZLUO. Following compliance with the LCP, BCO, and CZLUO, the Project would result in a less than significant impact regarding the exposure of people or structures to substantial adverse effects involving strong seismic ground shaking.

EXISTING REGULATIONS

Local Coastal Program Policies:

Hazards

LCP 1 New Development. All new development proposed within areas subject to natural hazards from geologic or flood conditions (including beach erosion) shall be located and designed to minimize risks to human life and property….

LCP 2 Erosion and Geologic Stability. New development shall ensure structural stability while not creating or contributing to erosion or geological instability.

[2] State of California, Department of Conservation, California Geological Survey, http://www.quake.ca.gov/gmaps/WH/ regulatorymaps.htm, Accessed May 27, 2014.

LCP 3 Development Review in Hazard Areas. The County shall require a detailed review of development proposed within the geologic study area and flood hazard combining designations as indicated on the Land Use Element maps for the coastal zone. The review shall be performed by a qualified registered and/or certified engineering geologist and shall be adequately detailed to provide recommendations and conclusions consistent with this plan….

San Luis Obispo County Building and Construction Ordinance:

In California, construction regulations consist of the California Building Code (CBC) and any additions or modifications to the CBC implemented by the local government. The San Luis Obispo County Building and Construction Ordinance (Title 19 of the San Luis Obispo County Code) (BCO) was established and adopted to protect and promote the public health, safety, and welfare. This ordinance is intended to regulate the design and construction of buildings and structures through basic standards for site preparation, erosion and sedimentation control, construction activities, quality of materials, occupancy classifications, the location and maintenance of buildings and structures and certain equipment associated with buildings and structures. According to BCO Chapter 19.3, *Building Code*, the 2010 CBC was adopted, as modified, amended, and/or supplemented.

Coastal Zone Land Use Ordinance Standards:

CZLUO Section 23.07.084 (Application Content - Geologic and Soils Report Required). This Section specifies that all land use permit applications for projects located within a Geologic Study Area (except those exempted by Section 23.07.082) shall be accompanied by a report prepared by a certified engineering geologist and/or registered civil engineer (as to soils engineering), as appropriate.

MITIGATION MEASURES

No mitigation is required.

4.6.a.3 Expose people or structures to potential substantial adverse effects, including the risk of loss, injury, or death involving seismic-related ground failure, including liquefaction?

No Impact. The Seismic Hazards Mapping Act (SHMA) of 1990 directs the Department of Conservation, California Geological Survey to identify and map areas prone to liquefaction (as well as earthquake-induced landslides and amplified ground shaking). Seismic Hazard Zone Maps are produced to illustrate the designated Zones of Required Investigation (ZORI), which are areas prone to liquefaction and earthquake–induced landslides. Site-specific geotechnical investigations are required within the ZORI to identify and evaluate seismic hazards (i.e., liquefaction and earthquake induced landslides) and formulate mitigation measures prior to permitting most developments designed for human occupancy. According to the Seismic Hazards Zones Map, the Project Site is not located within a ZORI for liquefaction hazard.[3] Additionally, General Plan Safety Element Map 3, *Liquefaction Hazards*, illustrates County lands with potential for liquefaction and indicates the Project site has a "Low Potential" for liquefaction.[4] Therefore, the Project would not expose people or structures to potential substantial adverse effects, including the risk of loss, injury, or death involving seismic-related ground failure, including liquefaction.

[3] State of California, Department of Conservation, California Geological Survey, http://www.quake.ca.gov/gmaps/WH/regulatorymaps.htm, Accessed May 27, 2014.

[4] Although the Coastal Zone North Coast Planning Area Rural Combining Designation Map indicates the Project site is designated GSA, this designation recognizes the potential for landslides that exists on portions of the Project site; see Responses 4.6.a.4 and 4.6.c.

MITIGATION MEASURES

No mitigation is required.

4.6.a.4 Expose people or structures to potential substantial adverse effects, including the risk of loss, injury, or death involving landslides?

4.6.c Be located on a geologic unit or soil that is unstable, or that would become unstable as a result of the project, and potentially result in an on-site or off-site landslide, lateral spreading, subsidence, liquefaction or collapse?

Less Than Significant Impact. The Seismic Hazard Zone Maps, which illustrate the designated ZORI including areas prone to earthquake–induced landslides, indicate that the Project site is not located within a ZORI for earthquake-induced landslide hazard.[5] However, General Plan Safety Element Map 4, *Landslide Hazards*, illustrates County lands with potential for landslides and indicates portions of the Project site have a "High Potential" for landslides. The Project site is designated GSA to recognize this High Potential for landslides; see Coastal Zone North Coast Planning Area Rural Combining Designation Map.

Operating and maintaining the equipment would not require full time staff onsite, since the AWTP would operate automatically. Up to two employees would visit the site daily to visually inspect and maintain the AWTP. Given the Project site's GSA designation, the Project could expose structures to adverse effects involving landslides. However, the proposed AWTP, water wells, and pipelines would not be located on or adjacent to steep slopes. Additionally, although the Project proposes to rehabilitate/modify the existing Van Gordon Reservoir for disposal of the RO brine (by adding impermeable liners, a leachate collection/removal system (LCRS), a vadose zone monitoring system, and mechanical spray evaporators), only nominal earthwork would be required. CDM PD Figure 2-9, *Brine Pond Section*, shows the existing Van Gordon Reservoir, and Exhibit 2-9, *Brine Pond Plan*, shows the proposed evaporation pond. The Project proposes to: demolish/regrade the existing spillway along the pond's southern berm to provide a uniform top of slope elevation around the pond; and grade the bottom of the pond for installation of the proposed liners, LCRS, and monitoring system. Further, as discussed in Response 4.6.a.2, numerous controls would be imposed on the Project through the permitting process, including those specified in the LCP, CZLUO, and BCO. Specifically pursuant to CZLUO Section 23.07.084, projects located within a GSA require preparation of report by a certified engineering geologist and/or registered civil engineer. Compliance with LCP Policies 1, 2, and 3 would be achieved through compliance with the BCO and CZLUO. Following compliance with the LCP, BCO, and CZLUO, the Project would result in a less than significant impact regarding the exposure of people or structures to substantial adverse effects involving landslides.

EXISTING REGULATIONS

Local Coastal Program Policies: See LCP 1, LCP 2, and LCP 3 above.

San Luis Obispo County Building and Construction Ordinance: See BCO above.

Coastal Zone Land Use Ordinance Standards: See CZLUO Section 23.07.084 above.

MITIGATION MEASURES

No mitigation is required.

[5] State of California, Department of Conservation, California Geological Survey, http://www.quake.ca.gov/gmaps/WH/regulatorymaps.htm, Accessed May 27, 2014.

4.6.b Result in substantial soil erosion or the loss of topsoil?

Less Than Significant Impact. Erosion is a natural process that occurs over time and can be caused by either wind or water moving over soils. However, soil erosion can become a problem when human activities accelerate the rate at which soils are displaced.

Based on the USDA Soil Survey, the Project site is underlain by the following soil units: Beaches, Capistrano sandy loam (rolling); Concepcion loam (5 to 9 percent slopes); Lodo clay loam (5 to 15 percent slopes); Los Osos loam (5 to 9 percent slopes); Los Osos loam (30 to 50 percent slopes); Los Osos-Diablo complex (15 to 30 percent slopes); Marimel sandy-clay loam (occasionally flooded); Riverwash; and Salinas silty clay loam (0 to 2 percent slopes); see Appendix D Exhibit 4. Additionally, San Simeon Creek and Van Gordon Creek traverse the southeastern and western portions of the property, respectively.

Project implementation would result in ground-disrupting activities, which would temporarily disturb soils. Disturbed soils are susceptible to higher rates of erosion from wind, rain, and runoff. Earth-disturbing activities associated with Project construction could result in substantial soil erosion or the loss of topsoil. As concluded in Response 4.9.a, the Project is subject to compliance with the National Pollutant Discharge Elimination System (NPDES) permitting process, which is administered through the State Water Resources Control Board Construction General Permit (Water Quality Order No. 2009-0009-DWQ, as amended by 2010-0014-DWQ and 2012-0006-DWQ) since one or more acres of soil would be disturbed. Additionally, the Project is subject to compliance with the relevant LCP Policies that address erosion: Coastal Streams LCP 20 requires that coastal streams and adjoining riparian vegetation be protected; LCP 21 requires evaluation of erosion and runoff concerns for development adjacent to a coastal stream; LCP 23 requires that the State Water Resources Control Board and the County ensure that the beneficial use of coastal stream waters is protected; LCP 28 requires that a buffer setback zone be established between any new development and the upland edge of riparian habitats; and Hazards LCP 2 requires that new development ensure structural stability while not creating or contributing to erosion. The Project is subject to compliance with CZLUO Chapter 23.05, *Site Development Standards*, which establishes standards for the preparation of sites for development and construction activities to protect against soil erosion. Specifically, CZLUO Sections 23.05.022 through 23.05.039 establish standards for grading and excavation activities to protect against erosion and the sedimentation of water courses. CZLUO Section 23.07.174, *Streams and Riparian Vegetation*, establishes standards intended to preserve and protect the natural hydrological system and ecological functions of coastal streams. Compliance with the relevant LCP Policies would be achieved through compliance with the NPDES, BCO, and CZLUO. Following compliance with the NPDES, LCP, and CZLUO regulatory requirements, the Project would result in a less than significant impact involving soil erosion. Refer also to Section 4.4, *Biological Resources*, and Section 4.9, *Hydrology and Water Quality*.

EXISTING REGULATIONS

Local Coastal Program Policies:

Coastal Streams

LCP 20 Coastal Streams and Riparian Vegetation. Coastal streams and adjoining riparian vegetation are environmentally sensitive habitat areas and the natural hydrological system and ecological function of coastal streams shall be protected and preserved.

LCP 21 Development in or Adjacent to a Coastal Stream. Development adjacent to or within the watershed (that portion within the coastal zone) shall be sited and designed to prevent impacts which would significantly degrade the coastal habitat and shall be compatible with the continuance of such habitat areas. This shall include evaluation of erosion and runoff concerns.

LCP 23 County and State Review of Coastal Stream Projects. The State Water Resources Control Board and the County shall ensure that the beneficial use of coastal stream waters is protected, for projects over which it has jurisdiction. For projects which do not fall under the review of the State Water Resources Control Board, the County (in its review of public works and stream alterations) shall ensure that the quantity and quality surface water discharge from streams and rivers shall be maintained at levels necessary to sustain the functional capacity of streams, wetland, estuaries and lakes.

LCP 28 Buffer Zone for Riparian Habitats. In rural areas (outside the USL) a buffer setback zone of 100 feet shall be established between any new development (including new agricultural development) and the upland edge of riparian habitats. In urban areas this minimum standard shall be 50 feet except where a lesser buffer is specifically permitted. The buffer zone shall be maintained in natural condition along the periphery of all streams. Permitted uses within the buffer strip shall be limited to passive recreational, educational or existing nonstructural agricultural developments in accordance with adopted best management practices. Other uses that may be found appropriate are limited to utility lines, pipelines, drainage and flood control facilities, bridges and road approaches to bridges to cross a stream and roads when it can be demonstrated that: 1) alternative routes are infeasible or more environmentally damaging and 2) adverse environmental effects are mitigated to the maximum extent feasible. Lesser setbacks on existing parcels may be permitted if application of the minimum setback standard would render the parcel physically unusable for the principal permitted use. In allowing a reduction in the minimum setbacks, they shall be reduced only to the point at which a principal permitted use (as modified as much as is practical from a design standpoint) can be accommodated.

Coastal Zone Land Use Ordinance Standards:

CZLUO Chapter 23.05 (Site Development Standards). This Chapter establishes standards for the preparation of sites for development and construction activities, to protect the health, safety and welfare of persons living on or near a project site by protecting against unwarranted or unsafe grading, or soil erosion resulting from grading; by defining appropriate circumstances for tree removal; by providing for adequate drainage and fire protection facilities; and by identifying appropriate standards for other aspects of site development.

CZLUO Section 23.05.020 (Grading). Sections 23.05.022 through 23.05.039 establish standards for grading and excavation activities to minimize hazards to life and property; protect against erosion and the sedimentation of water courses; and protect the safety, use and stability of public rights-of-way and drainage channels. Additional standards for grading within a Sensitive Resource Area are in Sections 23.07.160 *et seq.*

CZLUO Section 23.07.174 (Streams and Riparian Vegetation). Coastal streams and adjacent riparian areas are environmentally sensitive habitats. The provisions of this section are intended to preserve and protect the natural hydrological system and ecological functions of coastal streams.

a. Development adjacent to a coastal stream. Development adjacent to a coastal stream shall be sited and designed to protect the habitat and shall be compatible with the continuance of such habitat.

d. Riparian setbacks: New development shall be setback from the upland edge of riparian vegetation the maximum amount feasible. In the rural areas (outside the URL) this setback shall be a minimum of 100 feet. A larger setback will be preferable in both the urban and rural areas depending on parcel configuration, slope, vegetation types, habitat quality, water quality, and any other environmental consideration.

(1) Permitted uses within the setback: Permitted uses are limited to those specified in Section 23.07.172d(1) (for wetland setbacks), provided that the findings required by that section can be made. Additional permitted uses that are not required to satisfy those findings include pedestrian and

equestrian trails, and non-structural agricultural uses. All permitted development in or adjacent to streams, wetlands, and other aquatic habitats shall be designed and/or conditioned to prevent loss or disruption of the habitat, protect water quality, and maintain or enhance (when feasible) biological productivity.

MITIGATION MEASURES

No mitigation is required.

4.6.d Be located on expansive soil, as defined in Table 18-1-B of the Uniform Building Code (1994), creating substantial risks to life or property?

Less Than Significant Impact. Some of the soils identified in Response 4.6.b exhibit a high shrink swell potential, thus, the Project components could be located on expansive soil. As discussed in Response 4.6.a.2, numerous controls would be imposed on the Project through the permitting process, including those specified in the LCP, CZLUO, and BCO. Specifically pursuant to CZLUO Section 23.07.084, projects located within a GSA require preparation of report by a certified engineering geologist and/or registered civil engineer. Following compliance with the LCP, BCO, and CZLUO, the Project would result in a less than significant impact regarding expansive soils.

EXISTING REGULATIONS

Local Coastal Program Policies: See LCP 1, LCP 2, and LCP 3 above.

San Luis Obispo County Building and Construction Ordinance: See BCO above.

Coastal Zone Land Use Ordinance Standards: See CZLUO Section 23.07.084 above.

MITIGATION MEASURES

No mitigation is required.

4.6.e Have soils incapable of adequately supporting the use of septic tanks or alternative waste water disposal systems where sewers are not available for the disposal of waste water?

No Impact. The Project involves construction and operation of water facilities that would not generate wastewater or require disposal of wastewater. The microfilter backwash associated with AWTP operations would be returned to the existing percolation ponds adjacent to the AWTP. In addition, the Project proposes to rehabilitate/modify the existing Van Gordon Reservoir for disposal of the RO brine, see Responses 4.6.a.4 and 4.6.c. Therefore, the Project would not require septic tanks or alternative wastewater disposal systems, and no impact would occur in this regard.

MITIGATION MEASURES

No mitigation is required.

This page intentionally left blank.

4.7 GREENHOUSE GASES

Would the project:	Potentially Significant Impact	Less Than Significant With Mitigation Incorporated	Less Than Significant Impact	No Impact
a. Generate greenhouse gas emissions, either directly or indirectly, that may have a significant impact on the environment?			✓	
b. Conflict with an applicable plan, policy or regulation adopted for the purpose of reducing the emissions of greenhouse gases?			✓	

INTRODUCTION

California is a substantial contributor of global greenhouse gases (GHGs), emitting over 400 million tons of carbon dioxide (CO_2) per year.[1] Climate studies indicate that California is likely to see an increase of three to four degrees Fahrenheit (ºF) over the next century. Methane is also an important GHG that potentially contributes to global climate change. GHGs are global in their effect, which is to increase the earth's ability to absorb heat in the atmosphere. As primary GHGs have a long lifetime in the atmosphere, accumulate over time, and are generally well-mixed, their impact on the atmosphere is mostly independent of the point of emission.

The impact of human activities on global climate change is apparent in the observational record. Air trapped by ice has been extracted from core samples taken from polar ice sheets to determine the global atmospheric variation of CO_2, methane (CH_4), and nitrous oxide (N_2O) from before the start of industrialization (approximately 1750), to over 650,000 years ago. For that period, it was found that CO_2 concentrations ranged from 180 parts per million (ppm) to 300 ppm. For the period from approximately 1750 to the present, global CO_2 concentrations increased from a pre-industrialization period concentration of 280 ppm to 379 ppm in 2005, with the 2005 value far exceeding the upper end of the pre-industrial period range.

IMPACT ANALYSIS

4.7.a Generate greenhouse gas emissions, either directly or indirectly, that may have a significant impact on the environment?

Less Than Significant Impact. Due to the nature of global climate change, it is not anticipated that any single development project would have a substantial effect on global climate change. In actuality, GHG emissions from the Project would combine with emissions emitted across California, the United States, and the world to cumulatively contribute to global climate change.

Regulations and Significance Criteria

State

The Intergovernmental Panel on Climate Change (IPCC) constructed several emission trajectories of GHGs needed to stabilize global temperatures and climate change impacts. It concluded that a stabilization of GHGs at 400 to 450 ppm carbon dioxide equivalent (CO_2eq)[2] concentration is required to keep global mean warming below 2 degrees Celsius (ºC), which in turn is assumed to be necessary to avoid dangerous climate change.

[1] California Energy Commission, *California Greenhouse Gas Inventory for 2000-2011*, August 2013.

[2] Carbon Dioxide Equivalent (CO_2eq) – A metric measure used to compare the emissions from various greenhouse gases based upon their global warming potential.

Executive Order S-3-05 was issued in June 2005, which established the following GHG emission reduction targets:

- 2010: Reduce GHG emissions to 2000 levels;
- 2020: Reduce GHG emissions to 1990 levels; and
- 2050: Reduce GHG emissions to 80 percent below 1990 levels.

Assembly Bill (AB) 32 requires that the California Air Resources Board (CARB) determine what the statewide GHG emissions level was in 1990, and approve a statewide GHG emissions limit that is equivalent to that level, to be achieved by 2020. CARB has approved a 2020 emissions limit of 427 million metric tons (MMT) of CO_2eq.

Senate Bill (SB) 97 acknowledges that climate change is a prominent environmental issue that requires analysis under CEQA. This bill directs the Governor's Office of Planning and Research (OPR), which is part of the State Natural Resources Agency, to prepare, develop, and transmit to CARB guidelines for the feasible mitigation of GHG emissions (or the effects of GHG emissions), as required by CEQA. OPR published a technical advisory recommending that CEQA lead agencies make a good-faith effort to estimate the quantity of GHG emissions that would be generated by a proposed project. Specifically, based on available information, CEQA lead agencies should estimate the emissions associated with project-related vehicular traffic, energy consumption, water usage, and construction activities to determine whether project-level or cumulative impacts could occur, and should mitigate the impacts where feasible. OPR requested CARB technical staff to recommend a method for setting CEQA thresholds of significance as described in *CEQA Guidelines* Section 15064.7 that will encourage consistency and uniformity in the CEQA analysis of GHG emissions throughout the State. The Natural Resources Agency adopted the CEQA Guidelines Amendments prepared by OPR, as directed by SB 97. On February 16, 2010, the Office of Administration Law approved the CEQA Guidelines Amendments, and filed them with the Secretary of State for inclusion in the California Code of Regulations. The CEQA Guidelines Amendments became effective on March 18, 2010.

County of San Luis Obispo Air Pollution Control District

According to the San Luis Obispo County Air Pollution Control District (SLOAPCD) CEQA Air Quality Handbook (April 2012), SLOAPCD established significance thresholds for GHG emissions from project construction and operations. GHGs from construction projects must be quantified and amortized over the life of the project (i.e., 50 years for residential projects and 25 years for commercial projects). The amortized construction emissions are added to the annual average operational emissions and then compared to the operational thresholds of significance. The thresholds of significance for a project's amortized construction plus operational-related GHG emissions are:

- For land use development projects, the threshold is compliance with a qualified GHG Reduction Strategy; or annual emissions less than 1,150 metric tons per year (MT/yr) of CO2eq; or 4.9 MT CO2eq/service population (SP)/yr (residents + employees). Land use development projects include residential, commercial and public land uses and facilities. Lead agencies may use any of the three options above to determine the significance of a project's GHG emission impact to a level of certainty.

- For stationary-source projects, the threshold is 10,000 metric tons per year (MT/yr) of CO2eq. Stationary-source projects include land uses that would accommodate processes and equipment that emit GHG emissions and would require an SLOAPCD permit to operate.

Project-Related Sources of Greenhouse Gases

The proposed water facilities are described in Section 2.4, *Project Characteristics*. Project construction would result in direct emissions of CO_2, CH_4, and N_2O from the operation of construction equipment. Transport of materials and construction workers to and from the Project site would also result in GHG emissions. Construction activities would be short-term in duration and would cease upon Project completion. Project operations would not result in any new

sources of operational GHG emissions, as the proposed facilities would be electronically operated. Vehicle trips would be nominal and only associated with maintenance and inspection activities. Consequently, Project-related GHG emissions would only be from construction activities and energy consumption for equipment operations. The analysis of GHG emissions has been prepared utilizing the California Emissions Estimator Model (CalEEMod) computer model. Table 4.7-1, *Estimated Greenhouse Gas Emissions*, presents the estimated CO_2, N_2O, and CH_4 emissions of the Project. The CalEEMod outputs are contained within the Appendix A, *Air Quality/Greenhouse Gas Data*.

Table 4.7-1
Estimated Greenhouse Gas Emissions

Source	CO_2	CH_4		N_2O		Total $MTCO_2eq/yr$
	MT/yr[1]	MT/yr[1]	$MTCO_2eq/yr$[2]	MT/yr[1]	$MTCO_2eq/yr$[2]	
Direct Emissions[3]						
• Construction (amortized over 25 years)	11.11	0.00	0.05	0.00	0.00	11.16
Total Unmitigated Direct Emissions[4]	***11.11***	***0.00***	***0.05***	***0.00***	***0.00***	***11.16***
Indirect Emissions[5]						
• Energy	114.05	0.01	0.11	0.00	0.33	114.49
Total Unmitigated Indirect Emissions[4]	***114.05***	***0.01***	***0.11***	***0.00***	***0.33***	***114.49***
Total Unmitigated Project-Related Emissions[4]	***125.65 $MTCO_2eq/yr$***					

Notes:
1. Emissions calculated using California Emissions Estimator Model (CalEEMod).
2. Carbon dioxide equivalent values calculated using the United States Environmental Protection Agency Website, *Greenhouse Gas Equivalencies Calculator*, http://www.epa.gov/cleanenergy/energy-resources/calculator.html, accessed June 9, 2014.
3. The Project involves water facilities and would not include other direct emissions including area source or mobile source emissions.
4. Totals may be slightly off due to rounding.
5. Project-related indirect emissions would occur from energy consumption. Refer to Section 2.0, *Project Description*, for a detailed description of the electric load from the proposed equipment. The Project would not include other indirect emissions.

Refer to Appendix A, *Air Quality/Greenhouse Gas Data*, for detailed model input/output data.

Construction Emissions. Per the SLOAPCD *CEQA Air Quality Handbook*, construction GHG emissions are summed and amortized over 25 years. As seen in Table 7-1, the Project would result in 11.16 $MTCO_2eq$ when amortized over 25 years.

Energy Consumption. Energy Consumption emissions were calculated using CalEEMod and Project-specific energy consumption data for all of the proposed equipment. Electricity would be provided to the Project site via Pacific Gas & Electric. The Project would indirectly result in 114.49 $MTCO_2eq$/year due to energy consumption; refer to Table 7-1.

Conclusion

As seen in Table 4.7-1, the Project would result in a total of 125.65 $MTCO_2eq/yr$, which is well below the 10,000 $MTCO_2eq$/year screening threshold. As GHG emissions from construction of the Project would be minimal and less than the GHG emissions threshold adopted by the SLOAPCD, a less than significant impact would occur in this regard.

MITIGATION MEASURES

No mitigation is required.

4.7.b Conflict with an applicable plan, policy or regulation adopted for the purpose of reducing the emissions of greenhouse gases?

Less Than Significant Impact. On November 22, 2011, the County adopted *Energy Wise Plan Designing Energy and Climate Solutions for the Future,* a Climate Action Plan that addresses the challenges of climate change by reducing local GHG emissions and preparing the County to adapt to a changing climate. The Plan outlines the County's approach to reducing GHG emissions through a number of goals, measures, and actions that provide a road map to achieving the County's GHG reduction target of 15 percent below baseline levels by 2020. The Project would not conflict with the CAP, as the Project does not change the County's land use. Furthermore, the Project does not involve generating new vehicle trips or proposing new land uses. Therefore, the Project would not conflict with an adopted plan, policy, or regulation pertaining to GHGs. Also, the Project would result in Project-related GHG emissions that are below the CEQA threshold of 10,000 $MTCO_2eq/yr$. Thus, a less than significant impact would occur in this regard.

MITIGATION MEASURES

No mitigation is required.