Supplemental Documentation

4a CID Land Acquisition Option

4b CID Feasibility Study and Preliminary Design Plans

4c City of Fresno Property Ownership

4d City of Fresno Mitigated Negative Declaration Adoption

4e City of Fresno Preliminary Plans

4f FMFCD / Caltrans Memorandum of Understanding

4g FMFCD Schematic Plans

4h EOCSD Environmental Exemption Form

4i SCSD Labor Compliance Proposal

4j SCSD Environmental Exemption Form

4k Labor Compliance Plan Approved List

Attachment 4a

CID Land Acquisition Option

OPTION AGREEMENT

THIS OPTION AGREEMENT (the "Agreement") is made effective as of _____, 2014 (the ACommencement Date@), by and between FRESNO LAND & CATTLE COMPANY LLC, a Delaware limited liability company ("Optionor") and CONSOLIDATED IRRIGATION DISTRICT, a California Water District, or Optionee=s assignee ("Optionee"). Optionor and Optionee are sometimes collectively referred to herein as the "Parties" and singularly by their individual names as a "Party."

R E C I T A L S:

A. Optionor is the owner of that certain real property located at the southwest corner of Adams and Academy Avenues in Fresno County, State of California, and more particularly described in Exhibit "A" attached hereto and incorporated herein by this reference (the "Property"). The Property, together with all improvements and structures thereon and all appurtenant rights thereto, including, without limitation, houses, wells, pumps, permanent underground irrigation systems, if any, easements, rights-of-way for ingress and egress, minerals, oil, gas and other hydrocarbon substances, and water rights, air rights and development rights and privileges the Property may have, or that Optionor may have, specifically with respect to the Property, if any, shall hereinafter collectively be referred to as the "Real Property."

B. Optionor desires to grant to Optionee, and Optionee desires to receive from Optionor, an option to purchase all or part of the Real Property, on the terms and subject to the conditions of this Agreement.

NOW, THEREFORE, for good and valuable consideration, the receipt and adequacy of which are acknowledged, the parties agree as follows:

1. Option to Purchase. Optionor grants to Optionee an option to purchase the Real Property (the "Option") on the terms and conditions of this Agreement.

2. Consideration for Option. As consideration for the foregoing Option for the period of twelve (12) months from the Commencement Date, Optionee shall pay a total sum of Fifty Thousand and No/100 Dollars ($50,000) (the "Option Consideration") into an escrow account as followed: the sum of Ten Thousand and No/100 Dollars ($10,000.00) in cash, by cashier=s check, wire transfer or other immediately available funds acceptable to Optionor upon execution of this Agreement; and, the sum of Forty Thousand and No/100 Dollars ($40,000.00) in cash, by cashier's check, wire transfer or other immediately available funds acceptable to Optionor by November 15, 2014. After each payment of the Option Consideration is deposited into escrow, each respective payment of such funds shall be made immediately available to Optionor. Should Optionee choose to extend the Option by an additional six (6) months until January 15, 2016 (the "Extension"), as consideration for the Extension, Optionee shall be the sum of Twenty-Five Thousand and No/100 Dollars ($25,000) (the "Option Extension

Consideration") in cash, by cashier's check, wire transfer, or other immediately available funds acceptable to Optionor no later than July 15, 2015. Should Optionee exercise its Option, such Option Consideration and Option Extension Consideration shall be applied to the Purchase Price.

3. Term. The term of this Agreement shall commence on the Commencement Date, and terminate on the earlier of (i) January 15, 2016, or (ii) Optionee=s purchase of all of the Real Property (the "Option Term").

4. Exercise. This Option may be exercised by Optionee's delivery to Optionor, before the expiration of the Option Term, written notice of an election to purchase the Real Property (the "Exercise Notice"), which shall consist of two (2) copies of the Purchase Agreement (as defined in Paragraph 5) executed by Optionee, with the first paragraph of the Purchase Agreement completed by insertion of the date on which the Exercise Notice is given.

5. Purchase and Sale Agreement. The terms and conditions of a definitive purchase and sale agreement for the Real Property or any portion thereof (the "Purchase Agreement") shall incorporate the terms and conditions of this Agreement, in addition to the following terms and conditions:

(a) Purchase Price for all of the Real Property. The total purchase price for the Real Property shall be the lower of (i) Twenty-six Thousand and No/100 Dollars per acre ($26,000.00/acre), and (ii) One Million Three Hundred Ninety-One Thousand and No/100 Dollars ($1,391,000.00) (the "Purchase Price").

(b) Condition of the Real Property. Prior to Optionee paying the Purchase Price and taking title to the Real Property, Optionor shall remove all existing structures on the Real Property, including, but not limited to, the house.

(c) Conveyance of Title to the Real Property. Optionor shall convey fee simple title to the Real Property to Optionee by grant deed. Optionor shall deliver the grant deed on or before the date Optionee pays the Purchase Price. The Real Property shall include, but not be limited to, all of Optionor's interests in the following:

(i) All buildings and structures located on the Real Property, although such buildings and structures shall be removed by Optionor prior to Optionee taking title to the Real Property;

(ii) All water rights of any kind;

(iii) All other entitlements and expectancies to, on, or of the Real Property;

(iv) Any oil, gas, minerals, and hydrocarbons located on or under the Real Property;

(v) Any and all other improvements to the Real Property and any other fixtures or items of personal property that Optionor may have any interest in that are appurtenant or affixed to the Real Property; and

(vi) Any and all easements or rights-of-way appurtenant to the Real Property.

(d) Costs and Expenses. Closing costs for the Real Property, or any portion thereof, shall be borne by the Parties as follows:

(i) Any documentary transfer taxes, sales excise taxes or use taxes shall be paid by Optionor.

(ii) Recording fees shall be paid by Optionee.

(iii) Each Party shall pay its own legal, accounting, and other professionals= fees and costs incurred with respect to the purchase and sale of the Real Property, or any portion thereof, whether or not the closing of any purchase and sale occurs.

(e) Broker. Optionee is aware that Optionor's only broker is Lemley Land Sales, Inc. and that Optionor is solely responsible for payment to such broker. Optionee warrants and represents that it has not caused liability for payment of a broker=s commission or finder=s fee to be incurred with respect to any of the transactions which are the subject of Purchase Agreement, and Optionor agrees to indemnify and hold harmless Optionee from and against any liability for such commission or fee. Furthermore, Optionor warrants and represents that Lemley Land Sales, Inc. is Optionor's only broker and that there are no other brokers involved in the transaction which is the subject of this Agreement.

6. Execution of Purchase Agreement. On receipt by Optionor of the Exercise Notice, Optionor shall execute both copies of the Purchase Agreement within three (3) days.

7. Possession and Use of the Real Property. Except as otherwise provided in this Agreement, Optionor shall have the exclusive right to possess the Real Property and conduct any business thereon during the Option Term. Notwithstanding the foregoing, Optionor shall not execute any lease, easement, license or any other agreement affecting the condition of title to the Real Property or otherwise impair the condition of title to the Real Property without the prior written consent of Optionee which shall not be unreasonably withheld. It is expressly understood and agreed that the relationship of Optionor and Optionee is not one of partnership or joint venture, and that Optionee shall have no rights to any business of Optionor conducted on or about the Property.

8. Confidentiality. Except as may be specifically required by law, the Parties, including their successors, affiliates, subsidiaries, parents, insurers, officers, directors, employees, assigns, agents, accountants, engineers, consultants and attorneys, shall keep the terms of this Agreement and any Purchase Agreement confidential and shall refrain from disclosing, publishing, broadcasting or disseminating, either orally or in writing, the terms or provisions herein.

9. Quitclaim Deed. If this Agreement is terminated, Optionee agrees, if requested by Optionor, to execute, acknowledge, and deliver a quitclaim deed to Optionor within ten (10) days after termination and to execute, acknowledge, and deliver any other documents required by any title company to remove the cloud of this Option from the Real Property or any portion thereof.

10. Memorandum of Option. Upon the execution of this Agreement, the Parties shall execute and acknowledge a Memorandum of Option to Purchase to be recorded in the official records of Fresno County, in the form attached as Exhibit "B" hereto.

11. Costs and Expenses. Optionor and Optionee shall each pay their own respective costs and expenses incurred, or to be incurred, by said party in negotiating and preparing this Agreement, and all exhibits hereto, and in closing and carrying out the transactions contemplated by this Agreement (including, without limitation, attorneys=, paralegals=, and other professionals= fees and costs).

12. Attorneys= Fees. If any legal action or proceeding arising out of or relating to this Agreement is brought by either party to this Agreement, the prevailing party shall be entitled to receive from the other party, in addition to any other relief that may be granted, the reasonable attorneys= fees, costs and expenses in the action or proceeding by the prevailing party.

13. Notices. Except as otherwise expressly provided in this Agreement, all notices, requests, demands, and other communications required under this Agreement shall be in writing and shall be deemed to have been given (i) on the date of service, if served personally on the person to whom notice is to be given, (ii) on the date of receipt, if sent by telecopier to the person to whom notice is to be given at the telecopier number set forth below (provided that notices received after 5 p.m. shall be deemed given on the following business day), or (iii) on the third day after mailing, if mailed to the person to whom notice is to be given, by first class mail, postage prepaid, and properly addressed as follows:

To Optionor at: Fresno Land & Cattle Company LLC
Attn:
6489 Camden Ave., #204
San Jose, CA 95120

To Optionee at:	Consolidated Irrigation District Attn: Phil Desatoff 2255 Chandler Street Selma, CA 93662
With a Copy to:	Douglas B. Jensen, Esq. BAKER, MANOCK & JENSEN 5260 North Palm Avenue, Suite 421 Fresno, CA 93704 Facsimile: (559) 432-5620

Any party or designated recipient may change his address for purposes of this Paragraph 13, by giving written notice of such change to the other party or parties and/or designated recipients, in the manner provided for in this Paragraph 13.

14. Specific Performance. The Parties hereby declare that it is impossible to measure in money the damages that will accrue to Optionee by reason of the failure of Optionor to perform the obligations set forth in this Agreement. Should any dispute arise or any action be instituted by Optionee to enforce the provisions of this Agreement, it is agreed that this Agreement shall be enforceable by an action for specific performance and that an injunction may be issued restraining any sale or transfer of the Real Property or any use thereof contrary to the provisions of this Agreement pending the determination of the dispute. Optionor waives any claim or defense that an adequate remedy at law exists for the performance of this Agreement. An action for specific performance, however, is cumulative and not exclusive, and shall be in addition to any other remedy to which Optionee may otherwise have.

15. Entire Agreement. This Agreement and items incorporated herein, including, but not limited to, the Purchase Agreement, contain all of the agreements of the Parties with respect to the matters contained herein, and no prior agreement or understanding pertaining to any such matter shall be effective for any purpose.

16. Amendments. No provisions of this Agreement may be amended or modified in any manner whatsoever except by an agreement in writing by duly authorized representatives of both Parties.

17. Successors. The terms, covenants, and conditions of this Agreement shall be binding upon and shall inure to the benefit of the heirs, executors, administrators, and assignees of the respective Parties.

18. Assignment. Optionee may assign any or all of his rights under this Agreement, including the right to exercise the Option, at any time.

19. Governing Law. This Agreement and all documents provided for herein and the rights and obligations of the Parties hereto shall be governed in all respects, including validity, interpretation, and effect, by the laws of the State of California.

20. Partial Invalidity. If any provision of this Agreement, or any portion thereof, is held by a court of competent jurisdiction to be invalid, void or unenforceable, the remaining provisions of this Agreement, including, without limitation, the portions thereof not held to be invalid, void or unenforceable, shall nevertheless continue to be in full force and effect without being impaired or invalidated in any way.

21. Headings. The subject headings of the paragraphs of this Agreement are included for purposes of convenience only and shall not affect the construction or interpretation of any of the provisions herein.

22. Construction. All words used in this Agreement shall be construed to include the plural, as well as, the singular number and vice versa, all words used in this Agreement in the present tense shall include the future, as well as, the present, and all words used in this Agreement in masculine gender, shall include the feminine and neuter genders, whenever the context so indicates.

23. Waiver. A waiver of any breach of this Agreement, by any party to this Agreement, shall not constitute a continuing waiver or a waiver of any subsequent breach of the same, or a waiver of any breach of another provision of this Agreement.

24. Further Action. The parties to this Agreement shall execute such other documents, and shall take such other actions, as may be necessary or appropriate to carry out the foregoing.

25. Counterparts. This Agreement may be signed by the Parties in different counterparts, which together shall constitute one agreement, even though all parties may not have signed the same counterpart.

26. Time. Time is of the essence for this Agreement. If the Option is not exercised in the manner provided in Paragraph 4 before the expiration of the Option Term, Optionee shall have no interest in the Real Property and the Option may not be revived by any subsequent payment or further action by Optionee.

[*signatures contained on the following page*]

IN WITNESS WHEREOF, the parties hereto have executed this Agreement as of the day and year first above written.

"**Optionor**"	"**Optionee**"
FRESNO LAND & CATTLE COMPANY LLC, a Delaware limited liability company	CONSOLIDATED IRRIGATION DISTRICT, a California water district
By _____	By _____
Title _____	Title _____

EXHIBIT "A"

THE REAL PROPERTY

Fresno County Assessor's Parcel No.: 353-030-58S

Fresno County Assessor's Parcel No.: 353-030-65

Fresno County Assessor's Parcel No.: 353-030-07

Fresno County Assessor's Parcel No.: 353-030-64S

See attached Assessor's map.

EXHIBIT "B"

RECORDING REQUESTED BY
Consolidated Irrigation District

AND WHEN RECORDED MAIL TO:
Consolidated Irrigation District
2255 Chandler Street
Selma, CA 93662

-- NO FEE—
Benefit of Consolidated Irrigation District
Pursuant to Government Code § 6103

SPACE ABOVE THIS LINE FOR RECORDER=S USE ONLY

MEMORANDUM OF OPTION

This Memorandum of Option is made effective as of _____, 2014, by and between FRESNO LAND & CATTLE COMPANY LLC, a Delaware limited liability company ("Optionor") and CONSOLIDATED IRRIGATION DISTRICT, a California water district ("Optionee"), or Optionee=s assignee.

FOR VALUABLE CONSIDERATION, Optionor hereby grants Optionee an option to purchase the real property described in Exhibit "A" attached hereto and incorporated herein by this reference (the "Real Property"), under the terms and conditions described in detail in that certain Option Agreement dated of even date herewith, and incorporated herein by this reference (the "Option Agreement"). The option term shall commence on the date indicated above and terminate on January 15, 2016 (the "Option Term"), unless terminated earlier pursuant to the terms of the Option Agreement

IN WITNESS WHEREOF, the parties have executed this Memorandum of Option as of the date first above written.

"**Optionor**"	"**Optionee**"
FRESNO LAND & CATTLE COMPANY LLC, a Delaware limited liability company	CONSOLIDATED IRRIGATION DISTRICT, a California water district
By _____	By _____
Title _____	Title _____

ACKNOWLEDGMENTS

STATE OF _____)
)
COUNTY OF _____)

On _____, 2014, before me, _____, Notary Public, personally appeared _____, who proved to me on the basis of satisfactory evidence to be the person whose name is subscribed to the within instrument and acknowledged to me that he/she executed the same in his/her capacity as _____, and that by his/her signature on the instrument the entity upon behalf of which the person acted, executed the instrument.

I certify under PENALTY OF PERJURY under the laws of the State of _____ that the foregoing paragraph is true and correct.

Witness my hand and official seal.

_____
Notary Public
Print Name: _____
My commission expires: _____

Attachment 4b

CID Feasibility Study and Preliminary Design Plans

Adams and Academy Basin Feasibility Study

East of Fowler, CA

May 14, 2014

Prepared for:

Consolidated Irrigation District

Prepared by:

EST. 1968
PROVOST & PRITCHARD
CONSULTING GROUP
An Employee Owned Company

COPYRIGHT 2014 by PROVOST & PRITCHARD ENGINEERING GROUP, INC.
ALL RIGHTS RESERVED

Provost & Pritchard Engineering Group, Inc. expressly reserves its common law copyright and other applicable property rights to this document. This document is not to be reproduced, changed, or copied in any form or manner whatsoever, nor are they to be assigned to a third party without first obtaining the written permission and consent of Provost & Pritchard Engineering Group, Inc. In the event of unauthorized reuse of the information contained herein by a third party, the third party shall hold the firm of Provost & Pritchard Engineering Group, Inc. harmless, and shall bear the cost of Provost & Pritchard Engineering Group, Inc.'s legal fees associated with defending and enforcing these rights.

Contents

1 Introduction 1-1
1.1 Purpose/Scope 1-1
1.2 Project Location 1-1
1.3 Conveyance System Overview 1-1
1.3.1 Mill Ditch and Kingsburg Banch 1-2
2 Geology / Hydrogeology 2-1
2.1 Regional Geology 2-1
2.2 Local Geology 2-2
2.2.1 Top Soils 2-2
2.2.2 Soil Borings 2-3
2.2.3 Subsurface Geologic Cross Sections 2-4
3 Groundwater 3-1
3.1 Regional groundwater conditions 3-1
3.2 Local Groundwater Conditions 3-1
3.3 Groundwater Mounding and Aquifer Parameters 3-2
3.3.1 Estimated Aquifer Parameters 3-3
3.3.2 Estimated Percolation 3-4
3.3.3 Groundwater Mounding 3-4
3.3.4 Estimated Recovery Well Drawdown 3-5
3.4 Groundwater quality 3-6
4 Surface Water Supply and Availability 4-1
4.1 Water supply for project 4-1
4.2 Water availability 4-1
4.3 Basin Site and Improvements 4-1
4.4 Recharge Potential & Operations Analysis 4-1
4.4.1 Mill Ditch and Kingsburg Branch Operations 4-1
4.4.2 Potential performance 4-2
4.4.3 Mill Ditch and Kingsburg Branch improvements 4-2
5 Project Impacts and Issues 5-1
5.1 Environmental Impacts 5-1
5.2 Regulations, Permits, & Licenses 5-1
5.3 Possible Project Benefits 5-2
6 Construction Cost Estimate 6-1
7 Conclusions and Recommendations 7-1
7.1 Conclusions 7-1
7.2 Recommendations 7-1
8 Bibliography 8-1

Attachments

Attachment 1 Vicinity Map
Attachment 2 Project Investigation Map
Attachment 3 Soil Map
Attachment 4 Geologic Cross Section A' – A'
Attachment 5 Geologic Cross Section B' – B'
Attachment 6 Max Potential Yield – Adams and Academy Site
Attachment 7 Estimation of Basin Site Yield
Attachment 9 Preliminary Plan Set

1 INTRODUCTION

1.1 Purpose/Scope

The purpose of this study is to investigate the feasibility of constructing a new basin at one of two optional sites near Adams and Academy Avenues to develop a groundwater banking facility. This feasibility study examines the potential recharge and recovery capacity of the sites, water available to CID to be recharged, and the effects the project may have on the water table and nearby wells. The two options are located in Consolidated Irrigation District on two parcels (APN 353-03-65, Option 1, and APN 353-03-11, Option 2)**.** These sites are of interests to the District because of their strategic location to both receive water to bank and recover water to supply downstream demand on the Mill Ditch and Kingsburg Branch canal systems.

This study also examines the groundwater and subsurface soil conditions in the area, estimates the capacity of recharge and recovery rates of the basins, and develops preliminary site layouts for one of the options.

1.2 Project Location

The potential project sites are located in Consolidated Irrigation District near the southwest corner of Adams and Academy northwest of the City of Parlier (**Attachment 1**). The Fresno-Clovis metropolitan area is located about 15 miles northwest of the sites. Other communities in the area include Del Rey to the northwest, about 3miles, and Selma and Fowler are along Highway 99 west and southwest from the sites, at about 5 miles and 6 miles, respectively. This location is strategically positioned within CID to allow recharged water to flow down gradient to benefit the area south and southwest. As well water recovered from the selected basin site can be diverted into either the Mill Ditch or Kingsburg Banch to augment water supplies to the services of both canal systems (**Attachment 2**).

1.3 Conveyance System Overview

The potential project sites are located near where the C-K No. 103 Canal (C-K) splits into the Mill Ditch (also known at the Selma Branch) and the Kingsburg Branch (**Attachment 2**). More specifically Option 1 is bounded on the west by the C-K with the exception of the southwest corner of the property where the C-K splits into the Mill Ditch and Kingsburg Branch. Option 2 is bounded on the northeast by the Kingsburg Branch and is within about 200 feet of Mill Ditch at the northwest corner of the property. Both potential recharge options should have the ability to be operated to recover banked water and send it into either the Mill Ditch and/or the Kingsburg Branch to make it available to both service areas. Banking facilities at either of these locations will increase the local operational flexibility of Mill Ditch and Kingsburg Branch, but also, when integrated, should promote operational flexibility in other parts of the District's distribution system. The flow capacity of the C-K is at least 600 cfs and maybe more at

Adams Avenue. This indicates that the C-K has sufficient capacity to provide water for a basin and the Mill Ditch and the Kingsburg Branch.

1.3.1 Mill Ditch and Kingsburg Banch

According to District staff both the Mill Ditch and the Kingsburg Branch have flow capacities of 300 cfs. The Mill Ditch system serves the area of the District within the vicinity of Selma. The Kirby Ditch and the Walnut Ditch split off of Mill Ditch about a half mile west of the sites (**Attachment 2**). The Kingsburg Branch serves the area of the District in the vicinity of Kingsburg

.

2 GEOLOGY / HYDROGEOLOGY

2.1 Regional Geology

Consolidated Irrigation District is located in the eastern part of the San Joaquin Valley. More specifically, the Adams and Academy study sites are located on the high alluvial fan of the Kings River (Page and Leblanc, 1969). Located on the high alluvial fan of the Kings River, the study sites are ideally located for both recharge and recovery of banked water. Several geologic and hydrogeologic conditions are present at the study sites, especially Option 1, which indicate that both surface materials and subsurface materials at the sites should efficiently recharge water. Additionally, given the sites locations water recharged in this vicinity will flow down gradient and benefit down gradient groundwater users in the District. The following geologic factors are considered pertinent to recharge and are summarized from published resources for the sites below,

- Top soils – Sandy Loams to Loamy Sands.
- Groundwater Flow Direction – Southwest
- Geologic Facies E & F – between 66 percent to more than 80 percent coarse grained materials within the upper 300 feet.
- Old Alluvium and Continental Deposits – the dominant aquifer materials in the central valley
- Underlain by Cobbles – materials of high transmissivity and storage
- Depth to Saline Water – approximately 1,550 feet below ground surface
- Depth to Bedrock – approximately 2,350 feet below ground surface

Geologic materials near the sites are continental sediments from the Sierra-Nevada Mountains deposited on the alluvial fan of the Kings River. These materials are differentiated with depth into the Old Alluvium and Continental Deposits. The well known lacustrine clay layers, mainly the A clay and E clay are not present in the vicinity of basin (Croft, 1972 and Page, 1986). As mapped by Page, 1986, the sites are located just east of sand dune deposits that extend from east of Helm to between Fowler and Del Rey, and from Malaga in the south to north of Riverdale. Evidence of the sand dune deposits is shown in boring logs and published soils information consulted for this study. These deposits are ideal for recharge and large dune deposits appear to be evident in well logs used for this study and samples retrieved from borings conducted as part of the study. The dune deposits are estimated to be up to 130 feet thick, and locally are underlain by unconsolidated Sierra-Nevada sediments. Intercalated within the coarser grained deposits (both dune sand and continental alluvium) are finer grained, overbank flood deposits which are evident as finer grained silts, silty clays, and

silty sands on boring logs. Due to the lack of near surface, wide spread, lacustrine clays and a preponderance of near surface coarse grained materials, the Option 1 appears suitable for cyclic recharge and recovery of surface water from a regional perspective. Additional study will be needed to ascertain the percolation rate on Option 2, but it appears that the near surface materials on Option 2 are not as conducive to recharge as Option 1.

2.2 Local Geology

2.2.1 Top Soils

Top soils at the sites and surrounding vicinity are comprised of loamy sand and sandy loam (**Attachment 3**). Within the project boundaries, five soil types are present; Delhi Loamy Sand, Dello loamy sand, Hanford Sandy Loam, Hanford fine sandy loam, and Tujunga loamy sand. **Table 1** below shows the approximate percentages of each soil type for each option and the estimated acres for each soils type.

Table 1 - Summary Soil Type Percentages and Estimated Acres of Soil Types

NRCS Soil Name	Option 1 (percent/est. acres)	Option 2 (percent/est. acres)
Delhi Loamy Sand	34 % / 19.7 acres	9 % / 5.5 acres
Dello loamy sand	3 % / 1.7 acres	NA
Hanford Sandy Loam	8 % / 4.5 acres	16 % / 9.4 acres
Hanford fine sandy loam	28.5 % / 16.5 acres	65 % / 38.7 acres
Tujunga loamy sand	27 % / 15.6	10 % / 5.8 acres

These soils are formed on granitic alluvium deposited from the Kings River or dunes on alluvial fan remnants. Based on the literature review and onsite borings there is no indication of hardpan or clay pan at the site. All of the site's soils have moderately rapid to rapid permeability and are Hydrologic Soil Group A soils, which have high infiltration rates and low runoff potential. Brief descriptions of the five soil types present at the site are included below.

The **Delhi loamy sand** soils are deep (60 inches), somewhat excessively drained soils formed in wind modified (dune sands) alluvium weathered from granitic sources, and are found on floodplains, terraces, and fans of major rivers debauching into the San Joaquin Valley. These soils are found on slopes ranging 0 to 3%. They generally have less than 5% clay, and negligible to slow runoff, rapid permeability and high saturated hydraulic conductivity.

The **Dello loamy sand** soils are mapped in small depressions in the Delhi Series soils. Dello soils are on nearly level flood plains, slough remnants and small depressions in the San Joaquin valley and the Sacramento-San Joaquin Delta. The Dello loamy sand consists of very deep (60 inches), somewhat excessively drained soils that formed in old, wind modified, granitic alluvium on alluvial fans in the San Joaquin Valley and Sacramento-San Joaquin Delta. Dello Series soils are relatively flat with slopes of 0 to 2

percent. These soils are indicated to have about 4 percent clay and therefore exhibit slow runoff, rapid permeability, and high saturated hydraulic conductivity.

The **Hanford sandy loam and fine sandy loam** soils consists of very deep (72 inches), well drained soils that formed in deep, moderately coarse textured alluvium dominantly from granite and other quartz bearing rock of similar texture. Hanford sandy loam soils are on floodplains and alluvial fans and have slopes of 0 to 15 percent. These soils have about 12.5% clay, negligible to low runoff characteristics, high saturated hydraulic conductivity and rapid permeability.

The **Tujunga loamy sand** soils consists of deep (60 inches), somewhat excessively drained soils on flood plains and alluvial fans locally formed from predominantly granitic alluvium from the Kings River. The Tujunga loamy sands are relatively flat being on slopes of 3 percent or less. These soils have about 2.5% clay, negligible runoff characteristics, very high to high saturated hydraulic conductivity and rapid permeability.

2.2.2 Soil Borings

Detailed subsurface geologic information was collected through advancing four borings on option 2 and one boring west of but near option 1. The boring logs can be found in **Appendix A** and the boring locations are shown on **Attachment 2**. The materials encountered in the borings are consistent with the geologic provenance of the area which has variably been the active alluvial fan of the Kings River and dune sands. In general, it appears that the near surface materials, down to 15 to 20 feet are finer grained silts and silty sands deposited on the floodplain of the Kings River. These near surface material are underlain by a relatively thick sequence of clean dune sands down to about 50 feet. Beneath the dune sands the subsurface materials indicate a geologic environment that was fluctuating between deposition in the flood plain of the Kings River and the dune sands. As well cobble stones are present in the subsurface, encounter at 86.5 feet in boring B1 and are also noted on several DWR well logs both onsite and near the sites. The cobble stones, interpreted to be relic stream channel deposits, indicate deposition in the area has in the past been in the active channel of the ancient Kings River.

Option 1

Previous subsurface investigations by Central Valley Testing (CVT), 2008, included soil descriptions and percolation tests in 10 shallow borings on Option 1 (**Attachment 2**). The CVT Geotechnical Evaluation and Percolation Tests Report is included in **Appendix A** and summarized here. The borings were completed to variable depths between 17 feet to 40 feet below ground surface (bgs). The soils summary provided in the CVT report indicates that soils from 2-5 feet were loose silty sands, and below 5 feet fine to medium grained sand was encountered. The boring logs indicate that minor amounts of silty sand are also evident below 5 feet, but the majority of the materials below 5 feet are described as sand. With the exception of percolations tests results in boring 5 @ 3 feet, boring 7 @ 4 feet, and boring 9 @ 5 feet, percolation rates appeared to be greater than 0 minutes per inch, i.e., to fast to calculate a viable percolation rate.

At the depths and locations for which measureable percolations rates were obtained, discussed above, percolations rates were between 2 to 5 minutes per inch (60 to 24 feet per day). These percolation rates are considered very fast and are not be indicative of the long term percolation rate of surface soils at the site. However, percolation data in conjunction with the material descriptions indicates that the subsurface conditions for Option 1 have a high recharge potential.

One boring (BA) was advanced to groundwater in May 2014 in the canal road of the C-K Canal close to but west of Option 1 (**Attachment 2**). Borings were not conducted onsite on Option 1 due a discrepancy in ownership. Generally consistent with CVT findings subsurface materials consisted of silty sands to silts with fine sands down to about 18 feet bgs. Beneath the finer grained materials, dune sands were present down to about 52.5 feet bgs with the exception of a 3 foot lens of interbedded silty sand and silt from 38 to 41 feet bgs. From 52.5 feet bgs to the bottom of the boring at 63 feet bgs, interbedded very fine-grained silty sands and silts were encountered (Appendix X). Groundwater was stable in the boring at 61.6 feet bgs. Given that the BA boring location was visually estimated to be about 2 feet higher than the site grade, groundwater beneath the site was probably about 59 feet in May 2014. This depth to water is consistent with the depth to water from Option 2.

Option 2

Four soil borings were conducted on the site in May 2014 to collect information on subsurface materials below depths typically covered in the soils data (from 60 to 72 inches). Borings B1 through B4 were advanced on Option 2 at the locations shown on **Attachment 2**. Boring B1 was completed to 86.5 feet bgs. Borings B2 and B3 were completed to 30 feet bgs, and B4 was completed to 60 feet bgs. The western 21 acres of Option 2 were not accessible at the time of subsurface investigations. Subsurface materials encountered in the four borings were variable and consisted of fine to very fine grained silty sands and silts to depths of between 14 to about 23 feet. Beneath the fine grained materials a layer of poorly graded sand, interpreted to be sand dunes, extended down to the bottom of the borings in B2 and B3, 51 feet bgs in B1 and 48 feet in B4. Below the dune sands interbedded silts and fine grained silty sands were encountered in B1 down to about 86.5 feet. Cobbles were encountered in B1 at 86.5 feet, but were not encountered in B4 to the total depth of 60 feet. The dune sand deposits extended down with to the total depth of 60 feet in B4, with the exception of a silt layer from 48 to 52.5 feet. Below the fine grained silty sands and silts, the dune sands were encountered in B2 and B3 down to the bottom of the borings at 30 feet. There was no percolation data available for Option 2 but it appears that the prevalence of fine grained materials in the near subsurface could negatively impact long term percolation rates.

2.2.3 Subsurface Geologic Cross Sections

Subsurface geologic cross sections were developed from geologic descriptions provided on DWR well completion reports. These cross sections were prepared in order

to evaluate the geology of the area within the aquifer zone most likely to be impacted by the project. Subsurface geologic information from the borings was included as appropriate into the geologic cross sections. Geologic cross section A-A' extends generally east to west through the area, and geologic cross section B-B' trends north to south. The cross sections extend for about one mile from the sites. The cross sections indicate that relatively coarse grained materials including sands, silty sands and cobbles are prevalent beneath the sites. These materials are interpreted to be mainly dune sands and river cobbles. Finer grained materials are present in the area but appear to be more prevalent east and west of the sites. Northward and southward from the sites, there appears to be relatively less finer grained materials and the majority of the subsurface materials appear to be sands and silty sands (**Attachments 4 & 5**).

3 GROUNDWATER

3.1 Regional groundwater conditions

The sites are located in the San Joaquin Valley groundwater basin, Kings subbasin as defined by DWR Bulletin 118, 2003 update. The Kings subbasin extents from the Sierra Nevada foothills on the east to the trough of valley to the west, and from the San Joaquin River on the north to about the Fresno County line on the south. CID occupies a large portion of the east central portion of the Kings subbasin generally south and southeast of Fresno. DWR has identified the Kings subbasin as being critically overdrafted. The base of fresh water, defined by R.W. Page 1973, as 3,000 micromhos, ranges from about 1,500 feet below ground surface in the vicinity of the study area to as deep about 3,400 feet in the area near Highway 43 and the Kings River. The base of fresh water is typically considered to be the maximum depth of the useable aquifer in terms of groundwater pumping and recharge. Groundwater is predominately bicarbonate type with major cations of calcium, sodium, and magnesium (DWR Bulletin 118, 2003). Regionally, groundwater flows west to southwest but is locally affected by groundwater pumping depressions associated with the area's larger cities and agricultural lands with no surface water supplies.

3.2 Local Groundwater Conditions

Local groundwater conditions have been quantified through collection of recent groundwater level information in the 3 borings completed to groundwater (**Appendix A**), recent measurement of water levels in two CID monitoring wells near the sites, review of DWR hydrographs for the two CID monitoring wells near the sites, and Depth to Groundwater maps (**Appendix B**).

Groundwater level information was collected from two CID monitoring wells located along Adams Avenue on April 24, 2014. CID MW 18 (State Well no. 15S22E16A001M) is located about one quarter of a mile west of the north boundary of Option 1 and CID MW 19 (State Well No. 15S22E14A001M) is located about a mile and a half east of the north boundary of Option 1. Hydrographs of the two CID monitoring wells was obtained from the DWR Water Data Library and used to compare the recent depth to water data to the historical trend (**Appendix B**). The DWR hydrographs have water level data from 1946 to 2009, and therefore are useful in evaluating long term trends for the local aquifer. Depth to water was below the bottom of the well, total depth measured at 51.6 feet below ground surface, in CID MW 18 in April 2014. The long term water level data for the well indicates that prior to the April 2014 attempt at measuring water level the deepest water level recorded was in October of 1992 at 49.4 feet bgs. Water level in CID MW 18 was recorded at 11.9 feet bgs in 1946, and while variable has generally declined since.

Depth to water was 26 feet below ground surface in CID MW 19 on April 24, 2014. The long term hydrograph for the well indicates that depth to water has varied over time from a high of 18.9 feet bgs in February 1987 to a low of 57.9 feet bgs in October 1977. Since about the late 1980's water levels have remained fairly stable in the well and the recent depth to water appears to be consistent with the trend since that time. The recent water level information indicates that east of the sites groundwater levels have remained fairly stable but has fluctuated in response to climatic conditions and agricultural demands in closer proximity to the sites. As well this information indicates that there was strong east to west groundwater gradient in the vicinity of the sites at the time of this investigation.

Site specific depth to water data was collected in B1 and B4 on Option 2 during the subsurface investigation in May 2014. Depth to water in B1 stabilized at 61.2 feet bgs and stabilized at 58.6 feet bgs in B4. While boring BA was not completed on Option 1, it was close to the western edge of the site. Groundwater was stable at 61.6 feet bgs at the boring location and therefore was probably about 59 feet bgs for Option 1. Previous depth to water information on a regional scale is available from Depth to Groundwater maps prepared by Kings River Conservation District, the Fresno Area-Regional Groundwater Management Plan and the Department of Water Resources for the springs of 2005, 2009, and 2011. These maps show that depth to water was about 40 feet bgs in the vicinity of the sites in the springs of 2005 and 2009, and appears to be between 40 to 50 feet in the area in spring 2011. The groundwater maps for Spring 2009 and 2011 are included in **Appendix B**. As indicated above groundwater is currently about 60 feet bgs. Within the continuance of the draught into the 2014 growing season and the demand on the local groundwater resources to meet crop water needs, it is quite likely that groundwater levels will continue to decline in the area.

3.3 Groundwater Mounding and Aquifer Parameters

To provide adequate yield, a banking facility must demonstrate both recharge and recovery capabilities. In order to maintain sufficient long-term infiltration rates, there must also be sufficient vertical distance between the basin floor and the groundwater table, or a greater depth of unsaturated zone that can be utilized for infiltration. Infiltration into an unsaturated zone is dependent on how fast existing water in the unsaturated zone and the down gradient water is evacuating. The lack of either hydraulic conductivity or sufficient unsaturated zone may cause mounding of the groundwater table, which may promote groundwater contamination, problems with nearby sewage systems, and poor infiltration rates. To achieve sufficient extraction capabilities, sub-surface materials should promote high transmissivity, or quick refilling of the water table after pumping to counteract the effects of drawdown.

To properly operate the potential basins with respect to the area's groundwater resources, aquifer parameters including transmissivity, specific yield, and infiltration rate are needed. No pumping test or infiltration test data was available to estimate site specific aquifer parameters, therefore these are estimated from the literature. The estimated aquifer parameters were used to derive estimates of groundwater mounding

during recharge operations and the potential affect that a future recovery well may have on the area's ground water levels. Long-term monitoring of the affects of the basins during recharge and recovery operations will be accomplished through measuring of water levels in a monitoring well network and changes in groundwater chemistry will be documented by sampling of specific wells in the monitoring network. Development of a monitoring well network and derivation of site specific aquifer parameters will be completed as part of further development of the selected option. Additional pumping test data will be gathered during the construction phase of the recovery well and if feasible a pilot recharge study will be conducted. These future data will be used to generate aquifer parameters specific to the portion of the aquifer from which the recovery well is perforated allowing for analysis of recovery well pumping affects of the project wells at build out. Additionally, this data will be used to refine estimates of groundwater mounding.

3.3.1 Estimated Aquifer Parameters

Important aquifer parameters needed to estimate the effects of the potential basin include transmissivity and specific yield. Transmissivity is the rate at which water is transmitted through a unit width of an aquifer under a unit hydraulic head. Specific Yield, also known as the drainable porosity, is the amount of water that will drain from the aquifer under the forces of gravity. Specific yield is used in this analysis as it is pertinent to unconfined aquifers as opposed to storativity which is pertinent to confined aquifers. As mentioned above the sites are located outside of the regional confining clay layers and water levels are fairly near shallow. Both of these indicate that the aquifer beneath the sites, especially the upper few hundred feet, is unconfined.

Regional transmissivity data is available from Davis et al., (1964), who summarizes numerous specific capacity values from Pacific Gas & Electric pump tests performed across the San Joaquin Valley. Using water level and discharge data from 83 field tests in T15S, R22E, they estimate a specific capacity of 63 gpm per foot of drawdown for the area. These values are based on early time drawdown data, and probably over estimate long-term specific capacities and transmissivity. Thomasson et al. (1960) developed an empirical relationship between specific capacity and transmissivity, which is also discussed by Driscoll (1986, Appendix 16.D). Using this method, transmissivity for T15S, R22E is about 95,000 gpd/ft based on early time drawdown data. This appears to be a valid estimate of transmissivity, but it should be noted that this estimated value is not based on actual pumping test data from the sites.

Regional specific yield data is available from Page and Leblanc, 1969. They mapped the sites materials to 300 feet as geologic facies E & F. Geologic facies E & F have a high percentage of coarse grained materials and these materials correlate to relatively high estimated values for specific yield. Average specific yields for geologic facies E & F, as estimated by Page and Leblanc, range from 16 to 18.7 percent. Specific yield values from the literature for fine sand are about 21 percent and for silts average about 18 percent. For this analysis a conservative estimate of specific yield of 17 percent is used to calculate groundwater mounding.

3.3.2 Estimated Percolation

The data needed to estimate percolation rates was not available, therefore an estimate is provided here based on estimated percolation rates from the District's South and Highland basin. Utilizing percolation data from South and Highland basin provides a reasonable estimate of percolation rate for the project sites because the sites, especially Option 1, appear to have very similar geologic materials in the near subsurface, i.e., sandy soils. The short-term percolations rate for the South and Highland basin was estimated to be 2 feet per day. However, experience has shown that long term percolation rates, even in sandy materials, will probably be about 0.5 feet per day. Based on the finer grained materials in the near subsurface material encountered in the borings on Option 2, it appears that Option 2 will have a slower long term percolation rate than Option 1. Lacking the data to provide an estimate of percolation rate, a conservative estimate of 0.3 feet per day is a reasonable estimate for a long term percolation rate for Option 2. These estimated percolation rates will be modified as percolation data becomes available.

3.3.3 Groundwater Mounding

Areas underlain by coarse-grained material of moderate to high permeability and specific yield are favorable for recharge and cyclic storage of groundwater. Highly permeable materials permit relatively rapid recharge and high specific yield ensures adequate storage capacity and recovery (Davis, et. al, 1964). In order to maintain sufficient long-term infiltration rates, there must also be sufficient vertical distance between the basin floor and the groundwater table-termed vadose zone, to allow recharged water to continually move vertically to the water table. Infiltration into an unsaturated zone is dependent on how fast existing water in the unsaturated zone is infiltrating or traveling towards the water table and the local groundwater gradient.

A spreadsheet developed by the USGS to solve the Hantush (1967) analytical equation for groundwater mounding beneath a storm basin was used to estimate groundwater mounding beneath Option 1 (Carleton, 2010). As both Option 1 and Option 2 are nearly the same size, the groundwater mounding scenario developed here is only for Option 1. The groundwater mound that develops under Option 2, if this option is selected, will likely be smaller mostly due to the slower estimated percolation rate. Option 1 is split into two cells with a combined total wetted floor area of 37.5 acres. Groundwater mounding was estimated for Option 1 based on the following assumptions and operational scenario;

- Duration of recharge = 120 days
- Recharge Rate = 0.5 feet per day
- Horizontal Hydraulic Conductivity = 95 feet per day (from South and Highland Study)
- Storativity = 0.17 (discussed above)
- Initial thickness of saturated zone = 300 feet, approximate depth of deeper wells in the area
- Basin Dimensions = 1650 feet long by 1200 feet wide

Using the assumptions above the Hantush groundwater mounding equation yields the following estimates for mounding at the selected distances from the basin (Table 1, below). It should be noted that these estimates for groundwater mounding are based on several unknowns and will need refining with actual percolation and pumping test derived aquifer parameters.

Table 2 - Estimated Groundwater Mounding with distance from center of basin

Ground-water Mounding (feet)	**Distance from center of basin (feet)**
14.1	0
10.8	1,000
6.9	2,000
4.9	3,000
3.5	4,000
2.5	5,000
1.9	6,000
Note: Distance 0 is the center of the basin	

3.3.4 Estimated Recovery Well Drawdown

In order to recover recharged water the basin will need a recovery well. It is assumed that the recovery well will have a capacity of 5.5 cfs (~2,450 gpm) and be able to recover about 11 acre feet per day of recharged water. The proposed recovery well location is located on the southwest corner of Option 1. Due to the regional nature of the aquifer parameters drawdown estimates for a recovery well located on Option 2 would be similar to the estimates proved below for a recovery well on Option 1. The recovery well will likely be perforated deeper than the local agricultural and domestic wells from about 150 feet to 500 feet bgs. In order to estimate the potential drawdown affects from recovery well pumping the two key aquifer parameters of Storativity/specific yield and transmissivity are needed. As mentioned above these parameters were not available from actual pumping test data, and therefore were estimated for the area from published sources. For this drawdown analysis a transmissivity of 95,000 gallons per day per foot and a specific yield of 0.17 are used. Below depths of about 200 feet the aquifer in the San Joaquin Valley is considered partially confined to confined, and therefore the Theis method was used to estimate drawdown from pumping the recovery well for 120 days at 5.5 cfs.

Table 3 - Estimated Drawdown after 120 days of Recovery Well Pumping

Distance from Recovery Well (feet)	Estimated Drawdown @ 120 days of pumping (feet)
100	21.3
500	11.9
1,000	7.9
2,000	4.1
3,000	2.2
4,000	1.2

The above estimates for drawdown indicate that the drawdown decreases with distance from the prosed recovery well. It should be noted that with increasing distance from the proposed recovery well it becomes increasingly difficult to determine drawdown affects from the recovery from locally induced drawdown from pumping of agricultural wells.

3.4 Groundwater quality

Groundwater in the area is of good quality for irrigation use. The natural geochemisty of the local groundwater was mapped by Page and Lebanc, 1969 to be of calcium sodium bicarbonate type. Additionally, their report has water quality information from a well about one mile north of the sites which indicates that at the time of their report the Total Dissolved Solid (TDS) in the vicinity of the sites was 70 mg/L. On May 8, 2014 a water sample was taken from a domestic well east of but close to Option 2, and analyzed for general minerals, inorganic chemicals, and EDB/DBCP (**Appendix C**). TDS from the well's water was 440 mg/L with an electrical conductivity of 600 umhos/cm. Nitrate was 75 mg/L which exceeds the maximum contaminant level of 45 mg/L. It is unclear why the well's water has a higher TDS than the historical USGS data would suggests but it may be that water percolating up gradient from the site at the Parlier waste water disposal facility has flowed down gradient into the area of the site. It is also feasible that local inputs from nearby septic systems have contributed to the elevated TDS in the well's water. Due to the time constraints of this study additional water samples were unable to be collected, therefore the extent of the higher TDS water could not be evaluated. However, as mentioned above, water quality sampling in wells in the final monitoring network will be conducted as part of the overall development of the network. Additional groundwater quality information will be collected for the recovery well and from dedicated monitoring wells. This data can be used to evaluate water quality trends in the area. It should be noted that the project will be recharging Kings River water with very low TDS usually less 20 mg/L (KRCD, 2008). The recharged Kings River water should positively impact the local groundwater quality.

4 SURFACE WATER SUPPLY AND AVAILABILITY

4.1 Water supply for project

CID currently has rights to obtain Kings River floodwater and Fisheries Agreement Schedule C flows during the fall and winter months. This water is generally not usable due to low irrigation demand during this time of year. Construction of this project would allow CID to take this otherwise unused water as well as other available surface waters off of the Kings River and divert them into the new basin through CID's C-K Canal and recharge the groundwater aquifer.

4.2 Water availability

A 50 year flow analysis was performed on the Kings River (**Attachment 6 & 7**) to look at available floodwater and fish flows that are currently not being used. Based on the analysis, approximately 2,300 acre-feet of water is available annually to divert into the project. Obviously, some years water would not be available for diversion, however, excluding zero availability years, the annual average is over 3,500 acre-feet.

4.3 Basin Site and Improvements

Two basin site alternatives are proposed in this report. Both options are envisioned to be very similar in operations and in cost so a single site layout was prepared for Option 1 only (**Attachment 8,** preliminary plans). The project would require a turnout structure to divert water from the C-K Canal, into a settlement channel that will settle out fines that could potentially plug the basin floors, into a distribution structure that would distribute water from the settlement channel and into the basins. Monitoring wells would be established to gage impacts from the project and determine if changes need to be made during operations of the project. A recovery well will provide for a way to extract water that has been stored by the project and deliver water to downstream users through CID's canals.

4.4 Recharge Potential & Operations Analysis

4.4.1 Mill Ditch and Kingsburg Branch Operations

According to CID staff, both the Mill Ditch and the Kingsburg Branch have a flow capacity of 300 cfs each near the project site. Water recovered from the project will be able to be diverted into either the Mill Ditch and/or the Kingsburg Branch.

4.4.2 Potential performance

Assuming an infiltration rate of 0.5 ft/day as discussed above, the project has the ability to recharge approximately 6,500 acre-ft of water, if water was available for recharge for the entire year.

With a 5.5 cfs well operating for 120 days (typical irrigation season), the project could extract approximately 1,320 acre-ft of water each year and still recharge about 230 acre-ft per year to the local aquifer. Over the long term, based on the analysis of the historical Kings River water availability, the bank should have an additional ~5,400 acre-ft in storage. This would be water that could be recovered and used to supplement irrigation demand on the Mill Ditch and/or the Kingsburg Branch.

4.4.3 Mill Ditch and Kingsburg Branch improvements

At this time improvements to the C-K, Mill Ditch and Kingsburg Branch are not anticipated. However, the District may want to automate the control structures which would require modifying or constructing new check structures.

5 PROJECT IMPACTS AND ISSUES

5.1 Environmental Impacts

A preliminary checklist has not been prepared as part of this study and it is anticipated that the conversion of agricultural land is likely to be the most significant issue. Similar projects have not had a negative aesthetic effect or interfere with the movement of any resident or migratory fish or wildlife species. Similar basin facilities do not have a significant effect on air quality, transportation or circulation systems, noise, light and glare, or land use. In preparation for the soil borings previously discussed, a categorical notice of exception was filed with the County of Fresno prior to the activities.

A Reconnaissance Level Biological Survey Report and a Phase 1 Environmental Site Assessment were not prepared for the project sites as part of this study. However, based on findings from similar basins in the area, it is anticipated that the project will not significantly impact the environment. Minor impacts could be addressed using common mitigation measures.

5.2 Regulations, Permits, & Licenses

The following is a list of expected federal, state and local laws, statutes, regulations and ordinances governing the proposed project, including any applicable local surface water and groundwater ordinances.

- Options for Purchase and Acquisition of Land – Acquisition of the land will be required for the project to be constructed. CID staff has secured an option to purchase.

- CEQA Requirements – The CEQA process and preparation of the required environmental documentation is required.

- County of Fresno Groundwater Ordinance – The County of Fresno Groundwater Ordinance regulates the delivery of groundwater within the County of Fresno.

- Fresno County General Plan – The county general plan does not currently include the expanded site as a groundwater banking facility and may require amendment.

- Well Drilling Permit from Fresno County (in accordance with Fresno County Well Ordinance) and filing of well log with DWR (in conformance of California Water Well Standards).

- Fresno County Grading Permit – required for construction and grading.

- NPDES Storm Water Permit for Construction – This permit is required for development of properties greater than 1 acre. However, a waiver may be obtained if certain construction criteria are met.

- Additional contractor requirements include California State licensing, OSHA standards, prevailing wage laws, non-discrimination and others.

- Notification of KRWA Member Agencies – Notification is required for exchanges and transfers, but is not subject to other member agency approvals.

- Possible challenges related to existing water rights addressing authority to groundwater storage.

5.3 Possible Project Benefits

Similar to other banking project sites constructed or under construction within CID, the project will provide the following benefits:

- Increase water supply by capturing flood and fish flow water during periods of little irrigation demand, storing it in the underground, and pumping for beneficial use when there is demand.

- Assist in establishing a fishery on the Kings River, by providing a beneficial place of use for waters diverted from storage for that purpose.

- Improve groundwater quality by recharging higher quality surface waters.

- Assume 10% of direct diversion will be left behind to recharge the local aquifer to benefit nearby Disadvantaged Communities

- Extend the agricultural irrigation season in dry years if needed.

- Generate revenue for CID. CID has not raised water rates in several years, and the largely vineyard District has been greatly affected by falling grape prices.

- Reduce water cost to project participants.

- Help to correct groundwater overdraft within CID.

- Create a large water-body that will benefit waterfowl and habitat.

- Improve water delivery and regulation for the Mill Ditch and Kingsburg Branch canal systems.

6 CONSTRUCTION COST ESTIMATE

Conceptual construction cost estimates were prepared for development of Option 1 into a banking facility. The estimate assumes that the construction activities will be contracted out. Refer to **Table 4** below for conceptual cost estimate details. This construction costs estimate is based on similar projects in the area that have recently gone out to construction.

Table 4 - Conceptual Cost Estimate

Consolidated Irrigation District
Adams and Academy Recharge Basin

(revised 5/14/14)

CONCEPTUAL

Item No.	Item Description	Estimated Quantity	Unit	Unit Price	Amount
1	Mobilization/demobilization, bonds & insurance (5%)	1	LS	$110,000	$110,000
2	Worker Protection (5%)	1	LS	$110,000	$110,000
				Sub Total:	**$220,000**
	Basin Earthwork				
3	Clearing and Grubbing	50	AC	$700	$40,000
4	Site Demolition (Buildings, Overhead Electric, etc.)	1	LS	$100,000	$100,000
5	Cell 1 Levee Earthwork (Fill)	55,000	CY	$5	$280,000
6	Cell 2 Levee Earthwork (Fill)	45,700	CY	$5	$230,000
7	Settling Channel	26,800	CY	$5	$130,000
8	Excavate and Export Surplus Earthwork	0	CY	$9	$0
				Sub Total:	**$780,000**
	Control/Diversion Structures				
9	Furnish and Install Basin Turnout Structure w/ 54" Slide Gate, Canal Lining, Standpipe Outfall	3	EA	$108,600	$330,000
10	Flow Measurement (Flow Meter and Control at Basin Turnout)	3	EA	$32,500	$100,000
11	Construct Project Diversion Check Structure and Apurtenances (Misc Metals, Stilling Well, etc.)	1	LS	$250,000	$250,000
				Sub Total:	**$680,000**
	Recovery Wells				
12	Construct Recovery Well (flow meter, well, well head, and discharge)	1	EA	$375,000	$380,000
				Sub Total:	**$380,000**
	Monitoring Wells				
13	Construct Shallow Monitoring Wells	3	EA	$12,500	$40,000
				Sub Total:	**$40,000**
	Other Site Improvements				

Consolidated Irrigation District
Adams and Academy Recharge Basin

(revised 5/14/14)

CONCEPTUAL

Item No.	Item Description	Estimated Quantity	Unit	Unit Price	Amount
14	Furnish and Install Perimeter Wire Fence and Gates	5,750	LF	$10	$60,000
15	Furnish and Install 3/4" Crushed Gravel for Levees (16' Wide, 12,600 LF, 3" Thick, 105 lb/cf)	2,700	TON	$40	$110,000
16	Construct Overhead Electric Lines for Recovery Well	2,000	LF	$25	$50,000
17	Misc Site Electrical	1	LS	$80,000	$80,000
				Sub Total:	**$300,000**
	Subtotal				$2,400,000
	Contingency			15%	$360,000
			PRELIMINARY COST ESTIMATE:		**$2,760,000**

7 CONCLUSIONS AND RECOMMENDATIONS

7.1 Conclusions

The preliminary geologic findings developed in this report indicate that Option 1 should have a higher percolation rate than Option 2. Further study and onsite borings on Option 1 would need to be conducted to evaluate the veracity of the this finding, but the borings and data from the 2008 Central Valley Testing study indicate the site should readily percolate water. However, if the Option 1 site is not available, Option 2 appears to be a viable location for a banking site.

Based on estimates of CID water supply availability and the anticipated performance of the project's percolation and extraction capabilities, the project has the potential to bank up to approximately 6,500 acre-feet and extract up to approximately 1,320 acre-feet on average each year. In addition, an average annual carryover (or end-of-year bank balance) of up to approximately 5,400 acre-feet is anticipated to facilitate the recovery of banked water through most dry years with the use of the recovery well. A larger amount of the annual carryover could be utilized if additional recovery wells are constructed, but would also result in a greater drawdown to the area's groundwater table. A groundwater monitoring network need to be established to monitor groundwater mounding levels to assist in determining an appropriate annual carryover or max annual banking limit once the banking project is in operation.

7.2 Recommendations

With consideration of the construction cost estimate for the development of Option 1, it is recommended that the project be fully built out to maximize the water banking benefits for the money invested. Cost and funding aside, there is generally no advantage in considering a phased approach to the construction. The onsite buildings and structures should be removed to allow more area for recharge (assumed in the conceptual site layout). Onsite wells should be located and evaluated for later use in the monitoring well network.

8 BIBLIOGRAPHY

Geology of the Fresh Ground-Water Basin of the Central Valley, California, with Texture Maps and Sections, USGS Water Supply Paper 1401-C, R.W. Page, 1986

Geology, Hydrology, and Water Quality in the Fresno Area, U.S.G.S. Open File Report, Page and LeBlanc 1969

Kings River Fisheries Management Program Water Quality Monitoring Report 2006-2007, Final Draft. Kings River Conservation District and others, May 2008,

Kings River Fisheries Management Program Framework Agreement, Exhibit "C" (1999)

Kings River Fisheries Management Program Water Quality Monitoring Report 2006-2007, Final Draft, Kings River Conservation District and others, May 2008.

Simulation of Groundwater Mounding Beneath Hypothetical Stormwater Infiltration Basins., USGS-Scientific Investigations Report No. 2010-5102, Carleton, Glen, B., 2010.

Subsurface Geology of the Late Tertiary and Quarternary Water-Bearing Deposits of the Southern Part of the San Joaquin Valley, California, U.S.G.S. Water Supply Paper 1999-H, M.G. Croft, 1972

Soil Survey Eastern Fresno Area (October 1971) U.S. Department of Agriculture Soil Conservation Service

Attachments

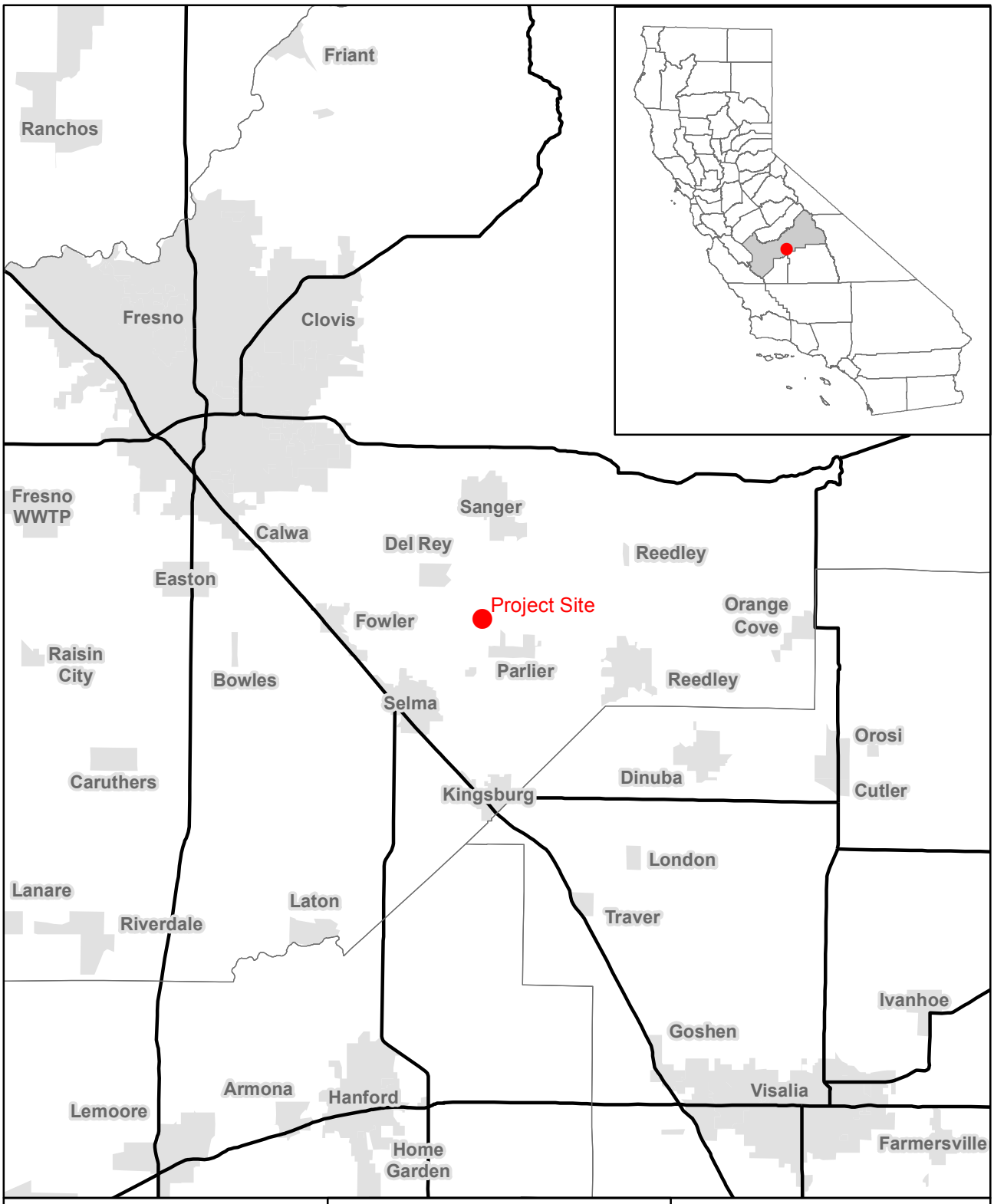

0 2 4 6 Miles

City/Town

EST. 1968
PROVOST & PRITCHARD
CONSULTING GROUP
An Employee Owned Company

286 W. Cromwell Ave.
Fresno, CA 93711-6162
(559) 449-2700

CONSOLIDATED IRRIGATION DISTRICT

Consolidated ID
Adams and Academy
Banking Sites
Vicinity Map
Attachment 1

5/15/2014 : G:\Clients\Consolidated ID-2004\GIS\Map\Vicinity.mxd

Aerial Imagery: USDA NAIP 2012

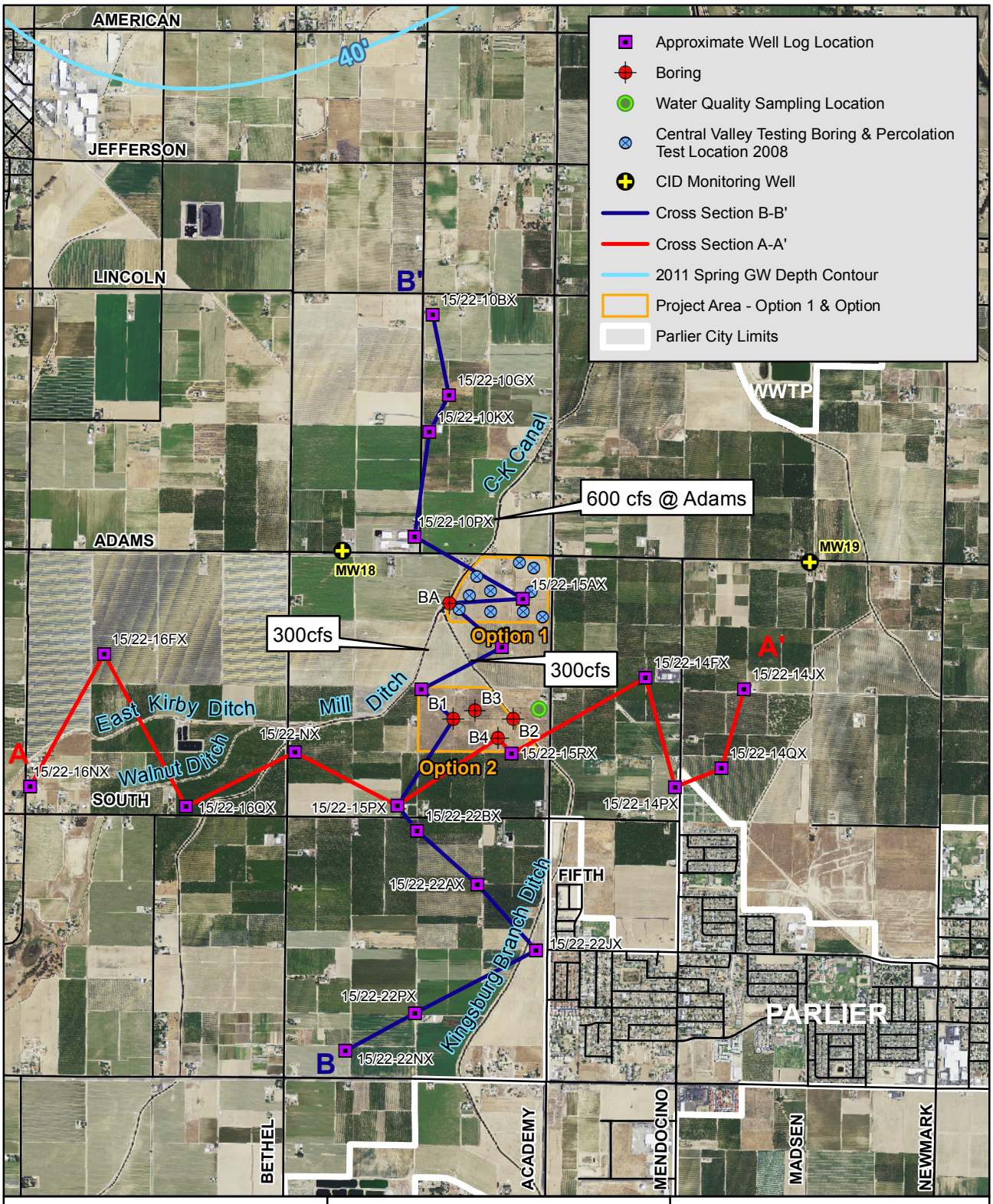

0 1,000 2,000 3,000 Feet

EST. 1968
PROVOST & PRITCHARD
CONSULTING GROUP
An Employee Owned Company

286 W. Cromwell Ave.
Fresno, CA 93711-6162
(559) 449-2700

CONSOLIDATED IRRIGATION DISTRICT

Consolidated ID
Adams and Academy
Banking Sites
Project Investigation Map
Attachment 2

5/15/2014 : G:\Clients\Consolidated ID-2004\GIS\Map\Project_Investigation_Map_v2.mxd

Aerial Imagery: USDA NAIP 2012

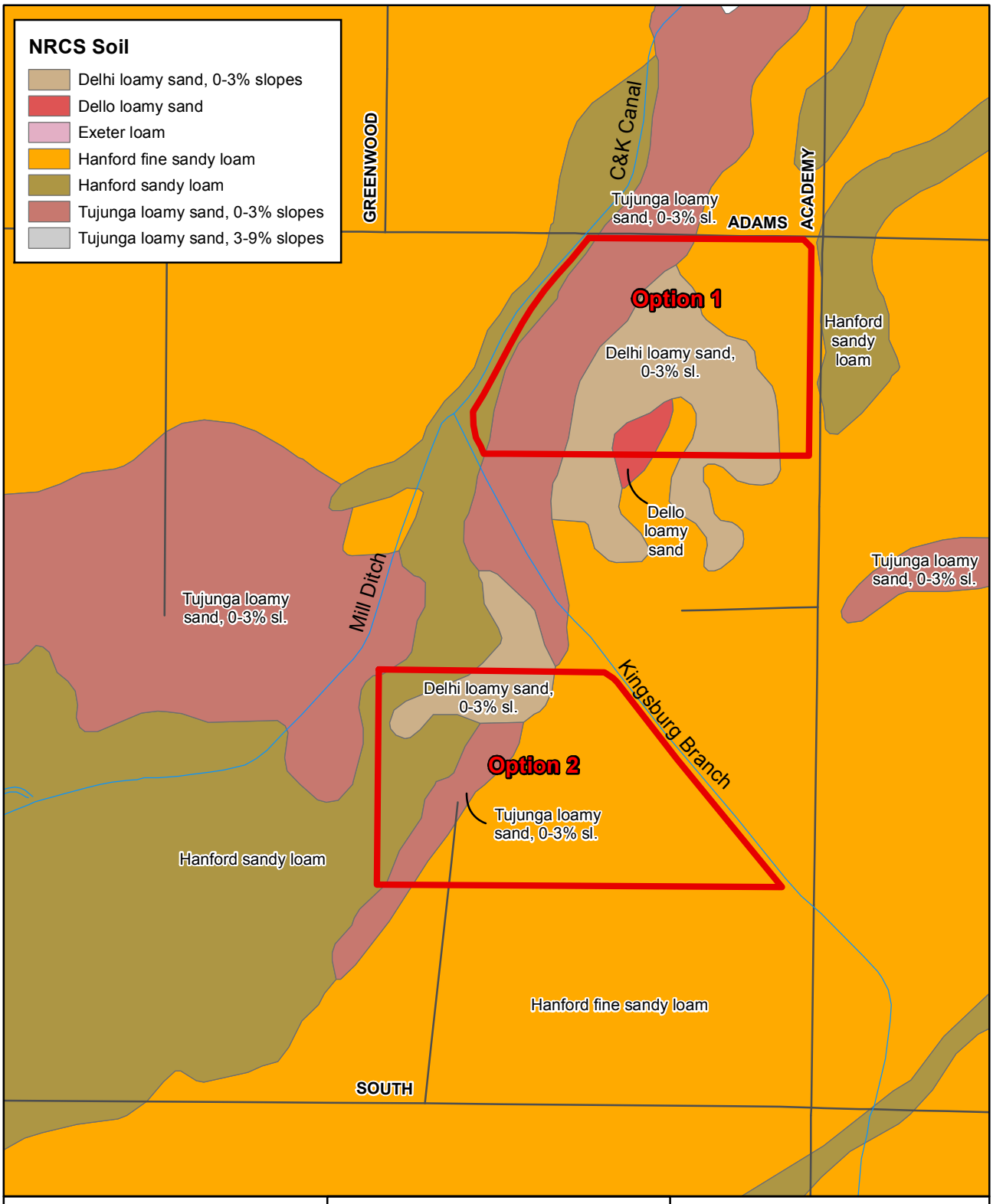

0 500 1,000 Feet

EST. 1968
PROVOST & PRITCHARD
CONSULTING GROUP
An Employee Owned Company

286 W. Cromwell Ave.
Fresno, CA 93711-6162
(559) 449-2700

CONSOLIDATED IRRIGATION DISTRICT

Consolidated ID
Adams and Academy
Banking Sites
Soil Map
Attachment 3

5/15/2014 : G:\Clients\Consolidated ID-2004\GIS\Map\Soils_closeup.mxd

Aerial Imagery: USDA NAIP 2012

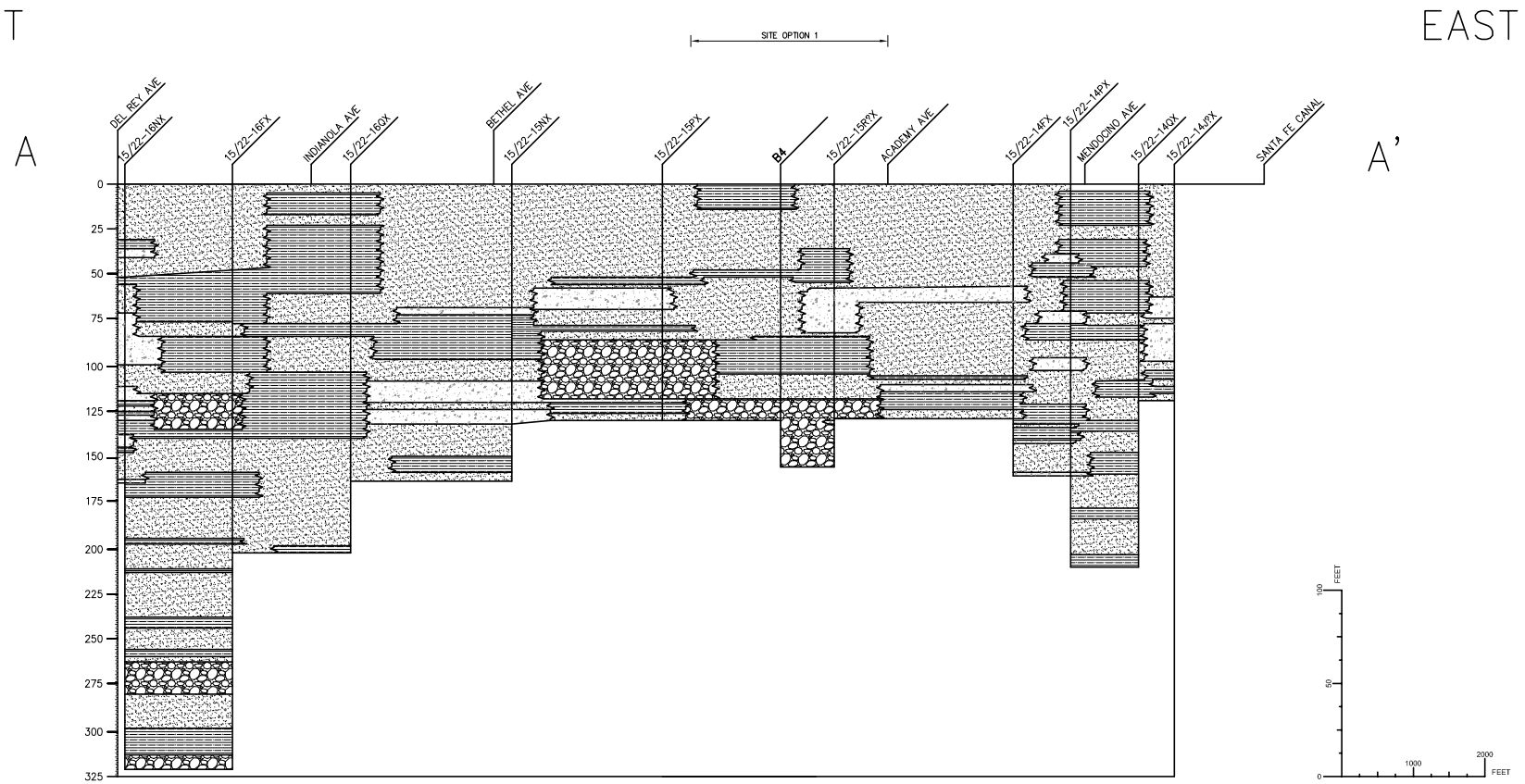

FINE GRAIN–
SILTS, SLAYS, AND VERY
FINE GRAIN SILTY SAND

COURSE GRAIN–
SANDS AND SILTY SANDS

COBBLE OR SAND &
COBBLE

INTERBEDDED SAND, SILT,
CLAY, AND SAND, SILT,
AND CLAY MIXTURES

NOTE

STATE WELL NAMES ARE APPROXIMATED FROM LOCATION INFORMATION PROVIDED IN DWR WELL COMPLETION REPORTS.

ADAMS AND ACADEMY
BASIN INVESTIGATION
CONSOLIDATED IRRIGATION DISTRICT
FRESNO COUNTY

GEOLOGIC CROSS SECTION A'-A'

DESIGN ENGINEER:

LICENSE NO:

DRAFTED BY: TLS | CHECKED BY: SWO

DATE: 5/13/2014

JOB NO: 20041101

0 _____ 1

ORIGINAL SCALE SHOWN IS IN INCHES. ADJUST SCALE FOR REDUCED OR ENLARGED PLANS.

SHEET

ATTACHMENT 4

5/15/2014 4:20 PM \\Pwafs01\dwg_dgn\Clients\Consolidated ID-2004\20041101-New Banking Site Investigation\DWG\EXHIBIT\CS1.dwg - Tonya Santillan

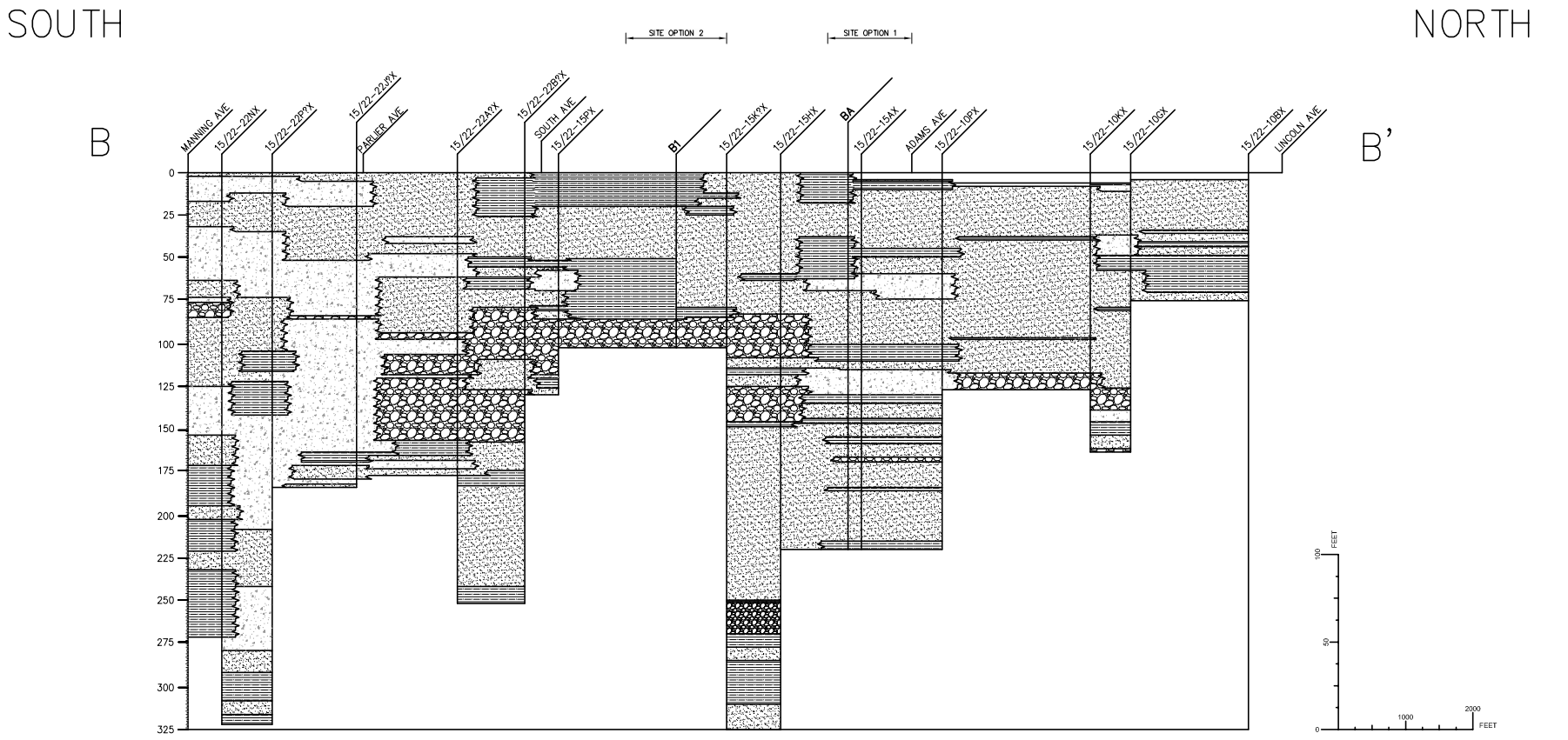

FINE GRAIN–
SILTS, SLAYS, AND VERY
FINE GRAIN SILTY SAND

COURSE GRAIN–
SANDS AND SILTY SANDS

COBBLE OR SAND &
COBBLE

INTERBEDDED SAND, SILT,
CLAY, AND SAND, SILT,
AND CLAY MIXTURES

NOTE

STATE WELL NAMES ARE APPROXIMATED FROM LOCATION INFORMATION PROVIDED IN DWR WELL COMPLETION REPORTS.

ADAMS AND ACADEMY
BASIN INVESTIGATION
CONSOLIDATED IRRIGATION DISTRICT
FRESNO COUNTY

GEOLOGIC CROSS SECTION B'-B'

DESIGN ENGINEER:

LICENSE NO:

DRAFTED BY: TLS | CHECKED BY: SWO

DATE: 5/13/2014

JOB NO: 20041101

0 1

ORIGINAL SCALE SHOWN IS IN INCHES. ADJUST SCALE FOR REDUCED OR ENLARGED PLANS.

SHEET

ATTACHMENT 5

5/15/2014 4:22 PM \\Pwafs01\dwp_dgn\Clients\Consolidated ID-2004\20041101-New Banking Site Investigation\DWR\EXHIBIT\CS1.dwg -Tonya Santillan

Consolidated Irrigation District
Max Potential Yield - Adams and Academy Site
(Includes Kings River Floodwater and Fish Flows)

Attachment 6

MAXIMUM PROJECT DIVERSION =	40	CFS
TOTAL DIVERSION =	40	CFS
BASIN CAPACITY =	113	AF
BASIN INFILTRATION RATE =	0.5	FT/DAY
BASIN ACREAGE =	37.5	ACRES
BASIN WATER DEPTH =	3.0	FT
DAILY RECHARGE VOLUME =	18.75	AF/DAY
EXTRACTION CAPACITY =	11	AF/DAY

MONTHLY MAXIMUM DIVERSIONS IN ACRE-FEET (BASED ON FLOWRATE ABOVE)

	Jan	Feb	Mar	Apr	May	Jun	Jul	Aug	Sep	Oct	Nov	Dec	TOTAL
Days	31	30	31	31	28	31	30	31	30	31	31	30	365
Project Diversion Vol.	2460	2381	2460	2460	2222	2460	2381	2460	2381	2460	2460	2381	28,966
Infiltration	581	563	581	581	525	581	563	581	563	581	581	563	6,844
Storage + Infiltration	694	675	694	694	638	694	675	694	675	694	694	675	8,194

	% KR Water Year	Oct	Nov	Dec	Jan	Feb	Mar	Apr	May	Jun	Jul	Aug	Sep	Totals
1953-1954	78%	581	563	581	581	525	0	0	0	0	0	0	0	2,831
55	66%	0	0	0	0	0	0	0	0	0	0	0	0	0
56	153%	694	563	581	581	525	581	0	0	0	0	0	0	3,525
57	74%	0	0	0	0	0	0	0	0	0	0	0	0	0
58	149%	694	563	581	581	525	581	563	581	563	581	0	0	5,813
59	48%	0	0	0	0	0	0	0	0	0	0	0	0	0
60	42%	694	563	581	581	525	0	0	0	0	0	0	0	2,944
61	34%	0	0	0	0	0	0	0	0	0	0	0	0	0
62	110%	694	563	581	581	525	0	0	0	0	0	0	0	2,944
63	112%	0	0	0	0	0	0	0	0	0	0	0	0	0
64	52%	694	563	581	581	525	0	0	0	0	0	0	0	2,944
65	117%	0	0	0	0	0	0	0	0	0	0	0	0	0
66	72%	694	563	0	694	525	0	0	0	0	0	0	0	2,475
67	196%	0	0	694	0	0	0	675	581	563	581	0	0	3,094
68	50%	694	563	581	581	525	0	0	0	0	0	0	0	2,944
69	258%	0	0	0	694	525	581	563	581	563	581	581	0	4,669
70	78%	694	563	581	581	525	581	0	0	0	0	0	0	3,525
71	69%	0	0	0	0	0	0	0	0	0	0	0	0	0
72	50%	694	563	581	581	525	0	0	0	0	0	0	0	2,944
73	125%	0	0	0	0	0	0	0	0	139	0	0	0	139
74	123%	694	563	581	581	525	0	675	581	563	0	0	0	4,763
75	93%	0	0	0	0	0	0	0	0	0	0	0	0	0
76	32%	694	563	581	581	525	0	0	0	0	0	0	0	2,944
77	23%	0	0	0	0	0	0	0	0	0	0	0	0	0
78	203%	694	563	581	581	525	581	563	581	563	176	0	0	5,407
79	102%	0	0	0	0	397	218	563	581	563	337	0	0	2,658
80	179%	694	563	581	581	525	581	563	581	563	581	0	0	5,813
81	61%	0	0	0	0	0	0	0	0	0	0	0	0	0
82	183%	694	0	0	694	525	0	675	581	563	581	8	0	4,321
83	263%	0	675	581	581	525	581	563	581	563	581	581	563	6,375
84	116%	581	563	581	581	525	581	200	0	0	0	0	0	3,613
85	74%	0	0	0	0	0	0	0	0	0	0	0	0	0
86	192%	694	563	581	581	525	581	563	581	563	0	0	0	5,231
87	46%	0	0	0	0	0	0	0	0	0	0	0	0	0
88	49%	694	563	581	581	525	0	0	0	0	0	0	0	2,944
89	53%	0	0	0	0	0	0	0	0	0	0	0	0	0
90	40%	694	563	581	581	525	0	0	0	0	0	0	0	2,944
91	63%	0	0	0	0	0	0	0	0	0	0	0	0	0
92	41%	694	563	581	581	525	0	0	0	0	0	0	0	2,944
93	150%	0	0	0	0	0	0	0	0	0	0	0	0	0
94	51%	694	563	581	581	525	0	0	0	0	0	0	0	2,944
95	203%	0	0	0	0	0	694	563	581	563	581	581	0	3,563
96	123%	694	563	581	581	525	581	0	694	464	0	0	0	4,683
97	156%	0	0	694	581	525	581	0	0	0	0	0	0	2,381
98	182%	694	0	0	694	525	581	563	581	563	581	0	0	4,781
99	74%	0	675	581	0	0	0	0	0	0	0	0	0	1,256
00	90%	694	563	581	581	525	0	0	0	0	0	0	0	2,944
01	59%	0	0	0	0	0	0	0	0	0	0	0	0	0
02	67%	694	563	581	581	525	0	0	0	0	0	0	0	2,944
03	84%	0	0	0	0	0	0	0	0	0	0	0	0	0
04	62%	0	0	0	0	0	0	0	0	0	0	0	0	0
05	149%	0	0	0	0	0	0	0	694	563	0	0	0	1,256
06	173%	45	45	45	45	45	45	675	581	563	45	45	45	2,224
07	40%	0	0	0	0	0	0	0	0	0	0	0	0	0
08	72%	31	30	31	31	28	31	30	31	30	31	31	30	365
Total		17,195	14,363	15,414	16,801	15,170	7,963	7,993	8,975	8,508	5,239	1,828	638	120,084
Min		0	0	0	0	0	0	0	0	0	0	0	0	0
Max		694	675	694	694	525	694	675	694	563	581	581	563	6,375
Avg		313	261	280	305	276	145	145	163	155	95	33	12	2,183
***Avg**		324	258	280	293	266	128	130	147	139	77	13	1	2,005

*** Excludes 1969, 1983, 1998**

Losses	10%
Estimated Yield	1965
Estimated Yield*	1804

Attachment 7

Estimation of Basin Site Yield
CID Adams and Academy Basin Site

Extraction Capacity =	11.0	AF/DAY
Days of Groundwater Extraction =	120	DAYS
Maximum Available in Storage, assumed to be 90% of maximum annual diversion capacity =	7,374	AF

	Same As	CVP % Water Year	**Supply Available (1)**	**Delivery to Basin (2)**	**Direct Recharge (3)**	**Available for Extraction (4)**	**Storage at Start of Year (5)**	**Project Extraction (6)**	**Storage at End of Year (7)**
1	55	66%	0	0	0	0	0	0	0
2	56	153%	139,502	3,525	353	3,173	3,173	0	3,173
3	57	74%	0	0	0	0	3,173	1,320	1,853
4	58	149%	206,415	5,813	581	5,231	7,084	1,320	5,764
5	59	48%	0	0	0	0	5,764	1,320	4,444
6	60	42%	0	2,944	294	2,649	7,093	1,320	5,773
7	61	34%	0	0	0	0	5,773	1,320	4,453
8	62	110%	0	2,944	294	2,649	7,103	1,320	5,783
9	63	112%	0	0	0	0	5,783	1,320	4,463
10	64	52%	0	2,944	294	2,649	7,112	1,320	5,792
11	65	117%	0	0	0	0	5,792	1,320	4,472
12	66	72%	0	2,475	248	2,228	6,699	1,320	5,379
13	67	196%	312,903	3,094	309	2,784	7,374	1,320	6,054
14	68	50%	0	2,944	294	2,649	7,374	1,320	6,054
15	69	258%	723,180	4,669	467	4,202	7,374	1,320	6,054
16	70	78%	95,091	3,525	353	3,173	7,374	1,320	6,054
17	71	69%	0	0	0	0	6,054	1,320	4,734
18	72	50%	0	2,944	294	2,649	7,374	1,320	6,054
19	73	125%	213	139	14	125	6,179	1,320	4,859
20	74	123%	124,621	4,763	476	4,286	7,374	1,320	6,054
21	75	93%	0	0	0	0	6,054	1,320	4,734
22	76	32%	0	2,944	294	2,649	7,374	1,320	6,054
23	77	23%	0	0	0	0	6,054	1,320	4,734
24	78	203%	435,352	5,407	541	4,867	7,374	1,320	6,054
25	79	102%	17,975	2,658	266	2,392	7,374	1,320	6,054
26	80	179%	626,812	5,813	581	5,231	7,374	1,320	6,054
27	81	61%	0	0	0	0	6,054	1,320	4,734
28	82	183%	316,636	4,321	432	3,888	7,374	1,320	6,054
29	83	263%	1,296,577	6,375	638	5,738	7,374	1,320	6,054
30	84	116%	559,373	3,613	361	3,251	7,374	1,320	6,054
31	85	74%	0	0	0	0	6,054	1,320	4,734
32	86	192%	497,057	5,231	523	4,708	7,374	1,320	6,054
33	87	46%	0	0	0	0	6,054	1,320	4,734
34	88	49%	0	2,944	294	2,649	7,374	1,320	6,054
35	89	53%	0	0	0	0	6,054	1,320	4,734
36	90	40%	0	2,944	294	2,649	7,374	1,320	6,054
37	91	63%	0	0	0	0	6,054	1,320	4,734
38	92	41%	0	2,944	294	2,649	7,374	1,320	6,054
39	93	150%	0	0	0	0	6,054	1,320	4,734
40	94	51%	0	2,944	294	2,649	7,374	1,320	6,054
41	95	203%	427,245	3,563	356	3,206	7,374	1,320	6,054
42	96	123%	103,527	4,683	468	4,214	7,374	1,320	6,054
43	97	156%	326,636	2,381	238	2,143	7,374	1,320	6,054
44	98	182%	593,379	4,781	478	4,303	7,374	1,320	6,054
45	99	74%	30,657	1,256	126	1,131	7,185	1,320	5,865
46	00	90%	0	2,944	294	2,649	7,374	1,320	6,054
47	01	59%	0	0	0	0	6,054	1,320	4,734
48	02	67%	0	2,944	294	2,649	7,374	1,320	6,054
49	03	84%	0	0	0	0	6,054	1,320	4,734
50	04	62%	0	0	0	0	4,734	1,320	3,414
Avg			136,663	2,268	227	2,041	6,525	1,267	5,257
Avg (8)				3,544	354	3,190	6,658	1,320	5,365
Total				113,408	11,341	102,067		63,360	

Notes:
1) Supply Available is the water supply for the project from MaxPotDiv1000Base-10PCT (10% of available flows).
2) Delivery to Basin is the amount of water diverted to the basin. Amount is limited by the available supply and is set not to exceed the Maximum Available in Storage minus the Storage at Year End.
3) Direct Recharge is the total annual amount of water that will be recharged in the project that will be left behind and not extracted. 10% of delivered.
4) Available for Extraction is the amount of water delivered to the basin minus the amount left behind for recharge.
5) Storage at Start of Year is the sum of the Storage at the End of the previous year and the Available for Extraction for the current year.
6) Project Extraction is the amount of water extracted based on the extraction capacity multiplied by the number of days considered for extraction.
7) Storage at Start of Year is the Available for Extraction at the start of the year minus the Project Extraction for that year.
8) Average of years when water is actually delivered to or extracted from basin.

Total "Project Extraction" for the 50-year period may be less than the total "Available for Extraction" if the sum of the annual "Storage at End of Year" and "Available for Extraction" exceeds the assumed "Maximum Available in Storage" amount.

CONSOLIDATED IRRIGATION DISTRICT

FRESNO COUNTY, CA

ADAMS & ACADEMY BASIN PROJECT
EARTHWORK & STRUCTURES

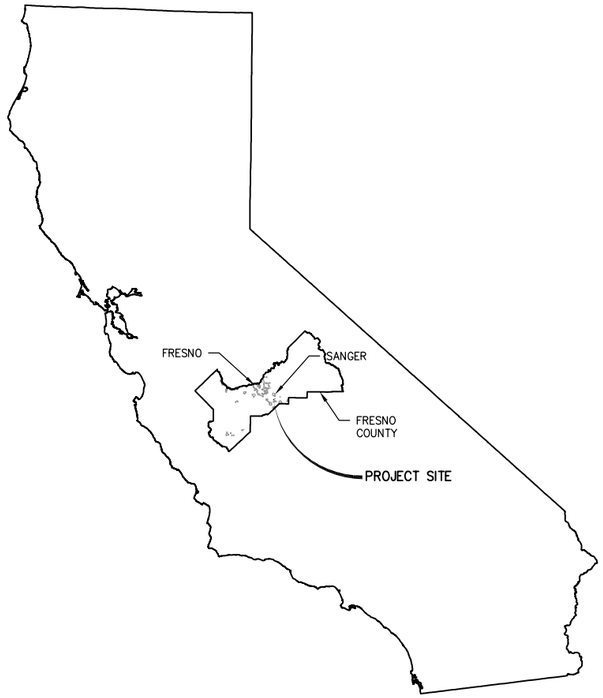

VICINITY MAP

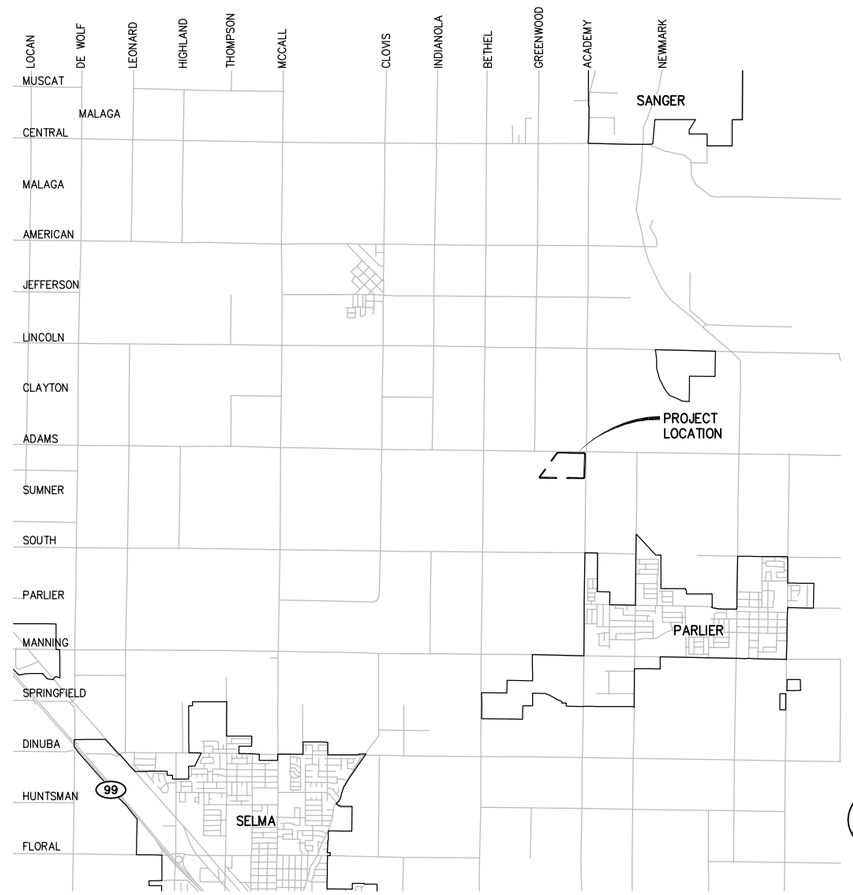

SITE MAP

WARNING
POWER LINES OVERHEAD

811 Know what's below. Call before you dig.

GENERAL NOTES

1. CONSOLIDATED IRRIGATION DISTRICT (559-896-1660) SHALL BE CONTACTED AT LEAST 48 HOURS PRIOR TO COMMENCEMENT OF WORK ON OR NEAR EXISTING DISTRICT FACILITIES.
2. USED MATERIAL, REJECTS, MISFITS, OR SECONDS, ETC. ARE NOT ACCEPTABLE FOR USE ON CONSOLIDATED IRRIGATION DISTRICT FACILITIES.
3. ALL CONSTRUCTION SHALL BE IN CONFORMANCE WITH THESE PLANS, AND THE PROJECT SPECIFICATIONS.
4. CONTRACTOR SHALL FIELD VERIFY THE HORIZONTAL AND VERTICAL LOCATIONS OF ALL EXISTING FACILITIES PRIOR TO COMMENCING WORK. CALL UNDERGROUND SERVICE ALERT (USA) AT 8-1-1. CONTRACTOR SHALL MAKE ENGINEER AWARE OF ANY DISCREPANCIES.
5. ALL CAST-IN-PLACE CONCRETE STRUCTURES SHALL BE FORMED INSIDE AND OUT AND CONCRETE VIBRATED SUFFICIENTLY TO PROVIDE FOR SMOOTH SURFACED WALLS/FLOORS WITHOUT VOIDS AND HONEYCOMBS.
6. CONSOLIDATED IRRIGATION DISTRICT SHALL INSPECT ALL WORK PHASES ON IRRIGATION FACILITIES FOR CONFORMANCE TO PROJECT SPECIFICATIONS. REINFORCING SHALL NOT BE ENCASED IN CONCRETE WITHOUT PRIOR CONSOLIDATED IRRIGATION DISTRICT INSPECTIONS. LIKEWISE, CONCRETE SHALL NOT BE COVERED WITH EARTH PRIOR TO CONSOLIDATED IRRIGATION DISTRICT INSPECTION.
7. CONCRETE DESIGN MIX SHALL BE SUBMITTED TO THE ENGINEER FOR REVIEW AND APPROVAL.
8. ALL STEEL PIPE AND FITTINGS SHALL BE FURNISHED WITH A SHOP APPLIED HIGH SOLIDS EPOXY COATING ON THE INTERIOR AND EXTERIOR, UNLESS OTHERWISE INDICATED. ALL OTHER EXPOSED STEEL SHALL BE PAINTED WITH A PRE-TREATMENT PRIMER, AN UNDERCOAT AND A FINAL COAT OF PAINT IN ACCORDANCE WITH PROJECT SPECIFICATIONS.
9. ALL NUTS, BOLTS, AND WASHERS USED TO SECURE UNDERGROUND FITTINGS SHALL BE STAINLESS STEEL. AFTER INSTALLATION, ALL STEEL HARDWARE SHALL BE COATED WITH A RUST PREVENTATIVE, WRAPPED WITH 4 MIL POLYETHYLENE SHEETING, AND SECURE WITH PVC TAPE.
10. THRUST RESTRAINTS TO BE PROVIDED AT ALL PIPELINE BENDS, WHETHER OR NOT SHOWN ON THE PLANS.
11. ALL CONSTRUCTION SHALL BE PERFORMED IN ACCORDANCE WITH APPLICABLE HEALTH AND SAFETY LAWS OF THE STATE OF CALIFORNIA AND CAL/OSHA STANDARDS.
12. TRENCH BACKFILL AND RESERVOIR EMBANKMENTS SHALL BE COMPACTED IN ACCORDANCE WITH THE SPECIFICATIONS AND THE GEOTECHNICAL REPORT CONTAINED IN THE SPECIFICATIONS.
13. CONTRACTOR WILL BE RESPONSIBLE FOR THE REPAIR OF ALL PIPELINE CRACKS, WHICH DEVELOP DURING CONSTRUCTION OF IMPROVEMENTS AFFECTING EXISTING FACILITIES.
14. CONCRETE BOX CULVERTS OR TURNOUT BOXES MAY BE PURCHASED FROM A PRE-APPROVED PRECAST MANUFACTURER. AT THE CONTRACTOR'S DISCRETION, THE CONTRACTOR MAY CONSTRUCT THESE STRUCTURES USING THE CAST-IN-PLACE METHOD IF SIGNED AND STAMPED DRAWINGS AND STRUCTURAL CALCULATIONS ARE SUBMITTED BY THE CONTRACTOR AND ARE APPROVED BY THE ENGINEER.
15. ALL EXCESS MATERIAL AND/OR DEBRIS SHALL BE REMOVED UPON COMPLETION OF INSTALLATION
16. CONTRACTOR SHALL BE RESPONSIBLE FOR PROVIDING ADEQUATE DUST CONTROL AT ALL TIMES.

FRESNO COUNTY NOTES

1. AN ENCROACHMENT PERMIT IS REQUIRED FOR ANY WORK TO BE PERFORMED IN THE COUNTY OF FRESNO ROAD RIGHT-OF-WAY. CONTACT THE COUNTY PERMIT ENGINEER AT (559) 600-4247 TO OBTAIN PERMIT. IF AN ENCROACHMENT PERMIT HAS NOT BEEN OBTAINED WITHIN 12 MONTHS OF THE APPROVAL DATE OF THESE PLANS, ADDITIONAL REVIEW AND REVISIONS TO THE PLANS MAY BE REQUIRED BEFORE THE PERMIT IS ISSUED.
2. ALL CONTRACTORS ARE REQUIRED TO HAVE A PERFORMANCE BOND ON FILE WITH THE COUNTY OF FRESNO MAINTENANCE & OPERATIONS DIVISION PRIOR TO OBTAINING AN ENCROACHMENT PERMIT.

TOPOGRAPHY NOTE

TOPOGRAPHY SHOWN IS BASED ON FIELD SURVEYS PERFORMED BY PROVOST & PRITCHARD.

BOUNDARY NOTE

THE BOUNDARY/RIGHT-OF-WAY INFORMATION SHOWN ON THESE PLANS IS BASED UPON RECORD INFORMATION TIED TO PHYSICAL MONUMENTS.

PROJECT BENCHMARK

ALL ELEVATIONS SHOWN ARE BASED ON BENCHMARK "101" WITH A NAVD 88 ELEVATION.

SPECIAL NOTE

WHERE UNDERGROUND AND SURFACE STRUCTURES ARE SHOWN ON THE PLANS, THE LOCATIONS, DEPTH AND DIMENSIONS OF STRUCTURES ARE BELIEVED TO BE REASONABLY CORRECT, BUT ARE NOT GUARANTEED. SUCH STRUCTURES ARE SHOWN FOR THE INFORMATION OF THE CONTRACTOR, BUT INFORMATION SO GIVEN IS NOT TO BE CONSTRUED AS A REPRESENTATION THAT SUCH STRUCTURES WILL, IN ALL CASES, BE FOUND WHERE SHOWN, OR THAT THEY REPRESENT ALL OF THE STRUCTURES WHICH MAY BE ENCOUNTERED.CONSTRUCTION ARE ALSO THE SOLE AND EXCLUSIVE RESPONSIBILITIES OF THE CONTRACTOR ALONE.

COPYRIGHT 2014 by PROVOST & PRITCHARD ENGINEERING GROUP, INC. (PROVOST & PRITCHARD GROUP, Inc.) expressly reserves its common law copyright and other property rights in these plans. These plans are not to be reproduced, changed or copied in any form or manner whatsoever, nor are they to be assigned to any third party without first obtaining the written permission and consent of Provost & Pritchard Engineering Group, Inc. In the event of unauthorized reuse of these plans by a third party, the third party shall hold the firm of Provost & Pritchard Engineering Group, Inc. harmless, and shall indemnify the firm of Provost & Pritchard Engineering Group, Inc.'s legal fees associated with defending and enforcing these rights.

No.	REVISION	BY	DATE

PRELIMINARY
05-20-2014

FOR REVIEW ONLY

ADAMS & ACADEMY BASIN PROJECT
EARTHWORK & STRUCTURES
CONSOLIDATED IRRIGATION DISTRICT
FRESNO COUNTY, CA

COVER SHEET

PROVOST & PRITCHARD
CONSULTING GROUP
An Employee Owned Company
7276 N. WILLOW AVENUE
FRESNO, CALIFORNIA 93711-6162
559/449-2700 FAX 559/449-2715
www.ppeng.com

DESIGN ENGINEER: ACC
LICENSE NO: 78242
DRAFTED BY: PPI
CHECKED BY:
DATE: 05-20-2014
JOB NO: 20041101

0 1
ORIGINAL SCALE SHOWN IS IN INCHES. ADJUST SCALE FOR REDUCED OR ENLARGED PLANS.

SHEET 1 OF 5

5/20/2014 7:43 AM G:\Clients\Consolidated ID-2004\20041101-New Rankin Site Investigation\DWG\SHEET\1 COVER SHEET.dwg -David Sorrick

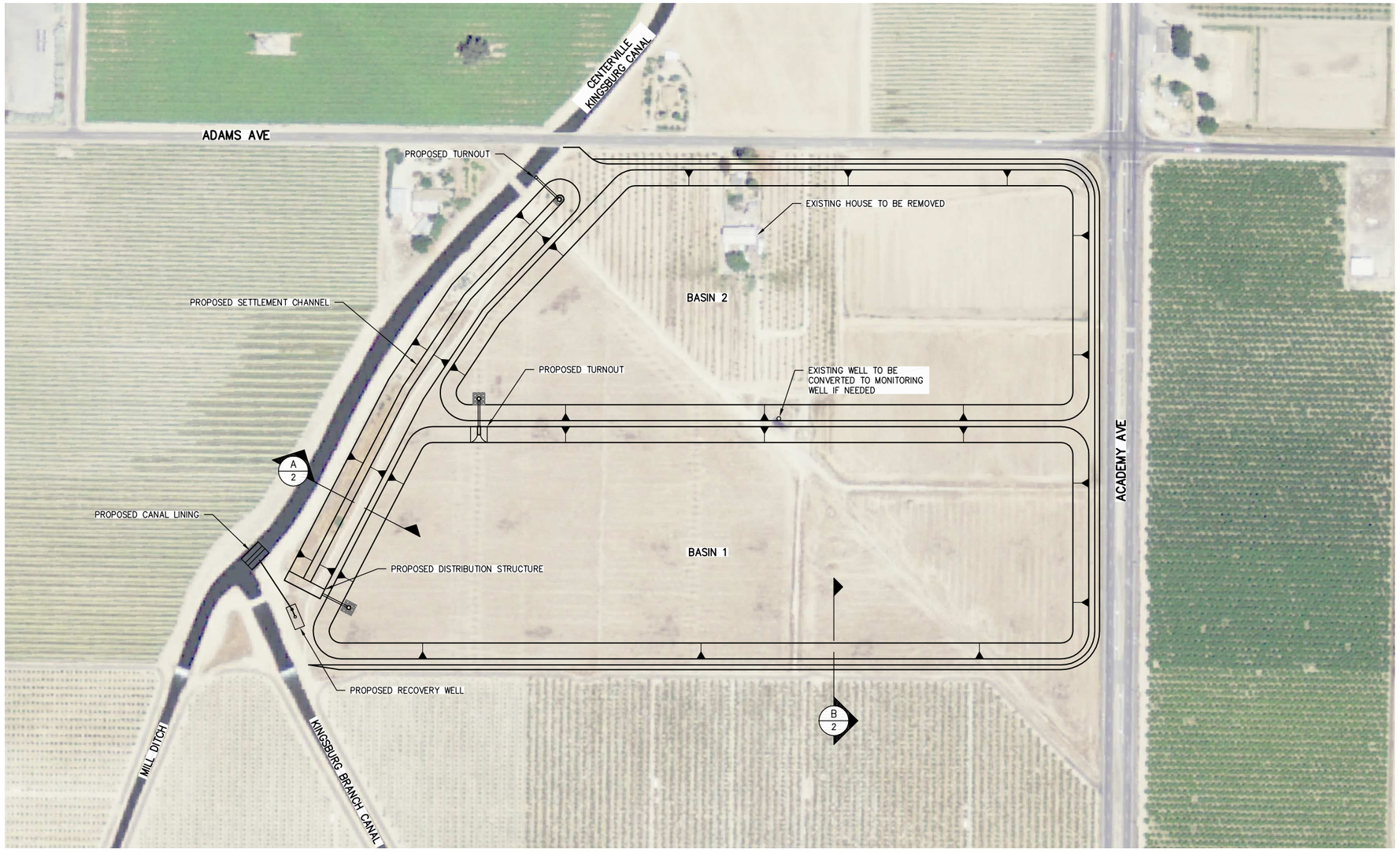

WARNING
POWER LINES OVERHEAD

811
Know what's **below.**
Call before you dig.

SCALE IN FEET
0 75 150 300

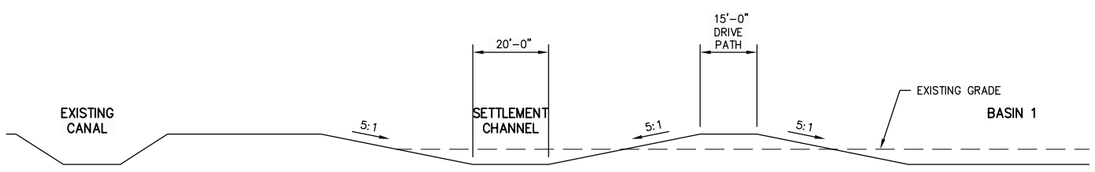

A
2
SECTION A
SCALE: NTS

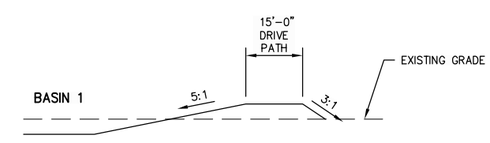

B
2
SECTION B
SCALE: NTS

COPYRIGHT 2014 by PROVOST & PRITCHARD ENGINEERING GROUP, INC. (www.provostpritchard.com) Provost & Pritchard Engineering Group, Inc. expressly reserves its common law copyright and other property rights in these plans. These plans are not to be reproduced, changed or copied in any form or manner whatsoever, nor are they to be assigned to any third party without first obtaining the written permission and consent of Provost & Pritchard Engineering Group, Inc. In the event of unauthorized reuse of these plans by a third party, the third party shall hold the firm of Provost & Pritchard Engineering Group, Inc. harmless, and shall indemnify the firm of Provost & Pritchard Engineering Group, Inc.'s legal fees associated with defending and enforcing these rights.

No.	REVISION	BY	DATE

PRELIMINARY
05-20-2014

ADAMS & ACADEMY BASIN PROJECT
EARTHWORK & STRUCTURES
CONSOLIDATED IRRIGATION DISTRICT
FRESNO COUNTY, CA

SITE PLAN

PROVOST & PRITCHARD
CONSULTING GROUP
An Employee Owned Company
286 WEST CROWN AVENUE
FRESNO, CALIFORNIA 93711-6162
559/449-2700 FAX 559/449-2715
www.ppeng.com

DESIGN ENGINEER: ACC
LICENSE NO: 78242
DRAFTED BY: PPI
CHECKED BY:
DATE: 05-20-2014
JOB NO: 20041101
0 1
ORIGINAL SCALE SHOWN IS IN INCHES. ADJUST SCALE FOR REDUCED OR ENLARGED PLANS.
SHEET 2 OF 5

5/20/2014 7:43 AM G:\Clients\Consolidated ID-20041\20041101-New Rankin Site Investigation\DWG\SHEET\2 SITE PLAN.dwg -David Sorick

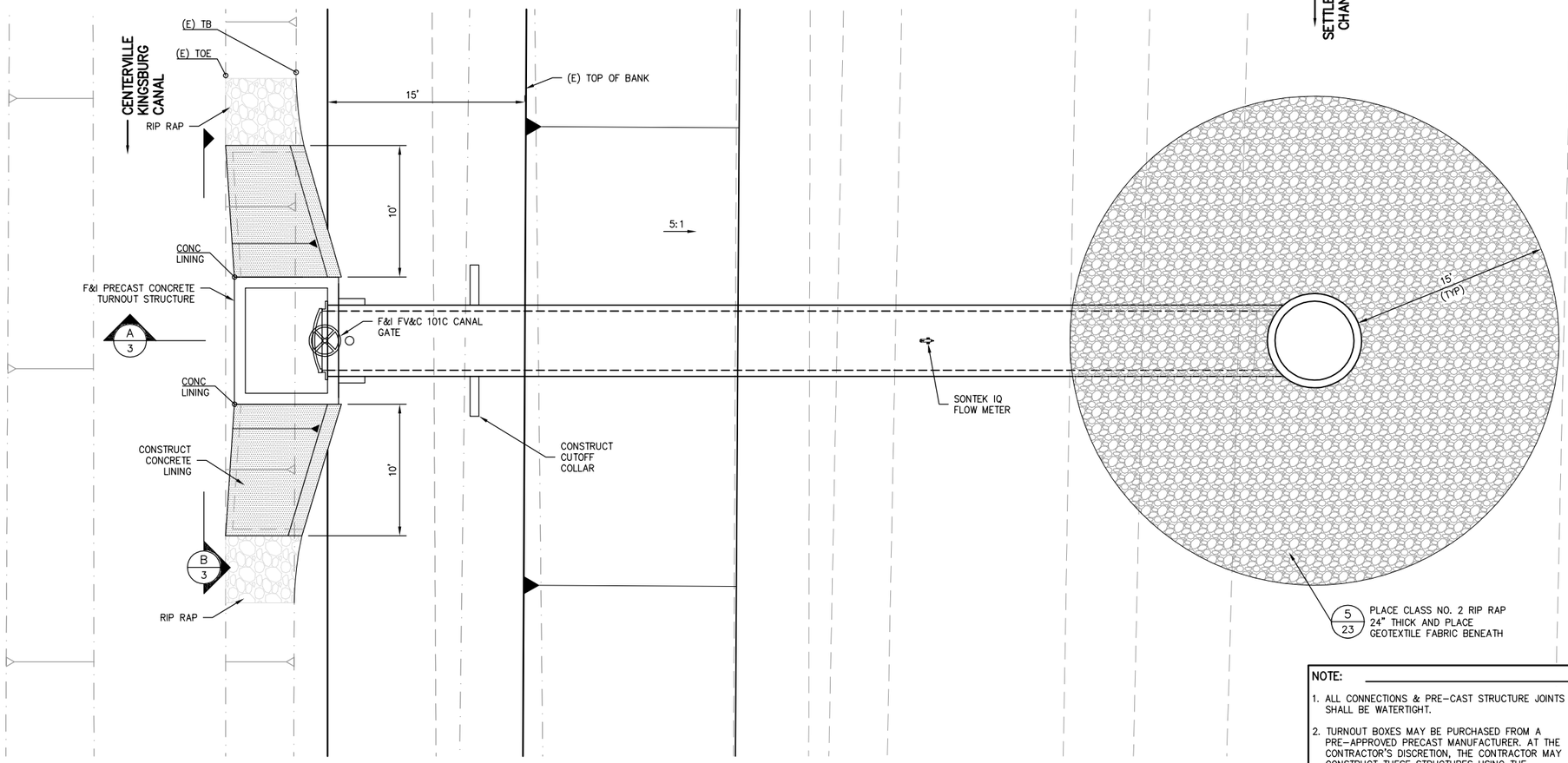

CANAL TURNOUT

SCALE: NTS

NOTE:

1. ALL CONNECTIONS & PRE-CAST STRUCTURE JOINTS SHALL BE WATERTIGHT.
2. TURNOUT BOXES MAY BE PURCHASED FROM A PRE-APPROVED PRECAST MANUFACTURER. AT THE CONTRACTOR'S DISCRETION, THE CONTRACTOR MAY CONSTRUCT THESE STRUCTURES USING THE CAST-IN-PLACE METHOD IF SIGNED AND STAMPED DRAWINGS AND STRUCTURAL CALCULATIONS ARE SUBMITTED BY THE CONTRACTOR AND ARE APPROVED BY THE ENGINEER.

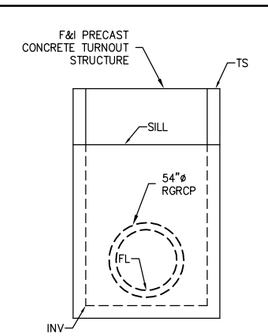

NOTE: GATE NOT SHOWN FOR CLARITY.

B 3 SECTION B-B

SCALE: NTS

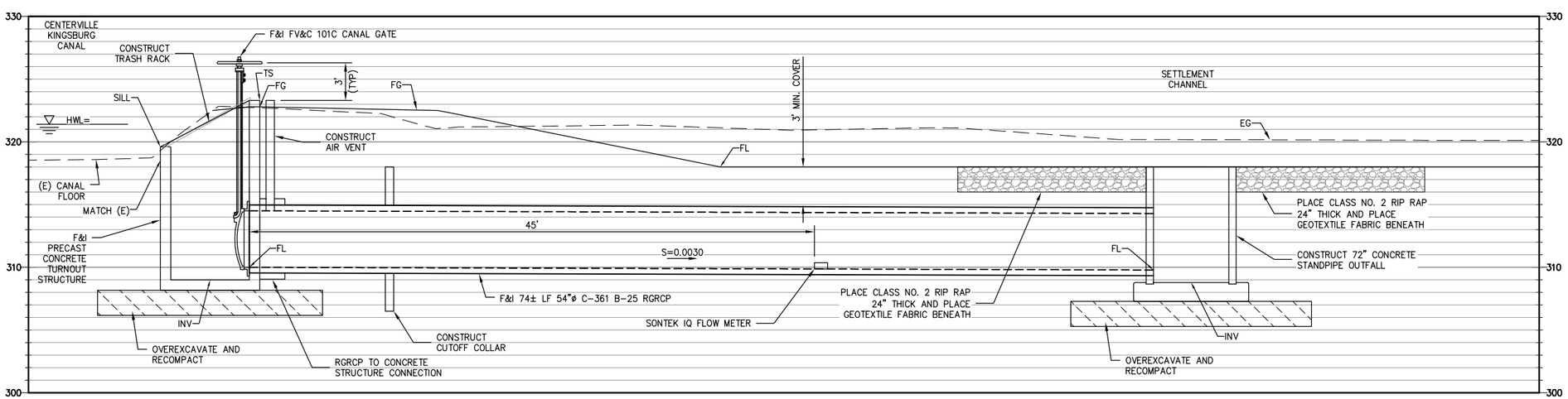

SECTION A-A

A 3

SCALE: NTS

WARNING
POWER LINES OVERHEAD

811 Know what's **below.** **Call** before you dig.

COPYRIGHT 2014 by PROVOST & PRITCHARD ENGINEERING GROUP, INC. (PROVOST & PRITCHARD) The firm of Provost & Pritchard Engineering Group, Inc. expressly reserves its common law copyright and other property rights in these plans. These plans are not to be changed or copied in any form or manner whatsoever, nor are they to be assigned to any third party, without first obtaining the written permission and consent of Provost & Pritchard Engineering Group, Inc. In the event of unauthorized reuse of these plans by a third party, the third party shall hold the firm of Provost & Pritchard Engineering Group, Inc. harmless, and shall defend and indemnify Provost & Pritchard Engineering Group, Inc.'s legal fees associated with defending and enforcing these rights.

No.	REVISION	BY	DATE

PRELIMINARY
05-20-2014

ADAMS & ACADEMY BASIN PROJECT
EARTHWORK & STRUCTURES
CONSOLIDATED IRRIGATION DISTRICT
FRESNO COUNTY, CA

TURNOUT STRUCTURE

EST. 1968
PROVOST & PRITCHARD
CONSULTING GROUP
An Employee Owned Company
286 WEST CHANEL AVENUE
FRESNO, CALIFORNIA 93711-6162
559/449-2700 FAX 559/449-2715
www.ppeng.com

DESIGN ENGINEER: ACC
LICENSE NO: 78242
DRAFTED BY: PPI
CHECKED BY:
DATE: 05-20-2014
JOB NO: 20041101

0 1
ORIGINAL SCALE SHOWN IS IN INCHES. ADJUST SCALE FOR REDUCED OR ENLARGED PLANS.

SHEET 3 OF 5

5/20/2014 7:44 AM G:\Clients\Consolidated ID-2004\20041101-New Banking Site Investigation\DWG\SHEET\3 TURNOUT STRUCTURE.dwg -David Sorrick

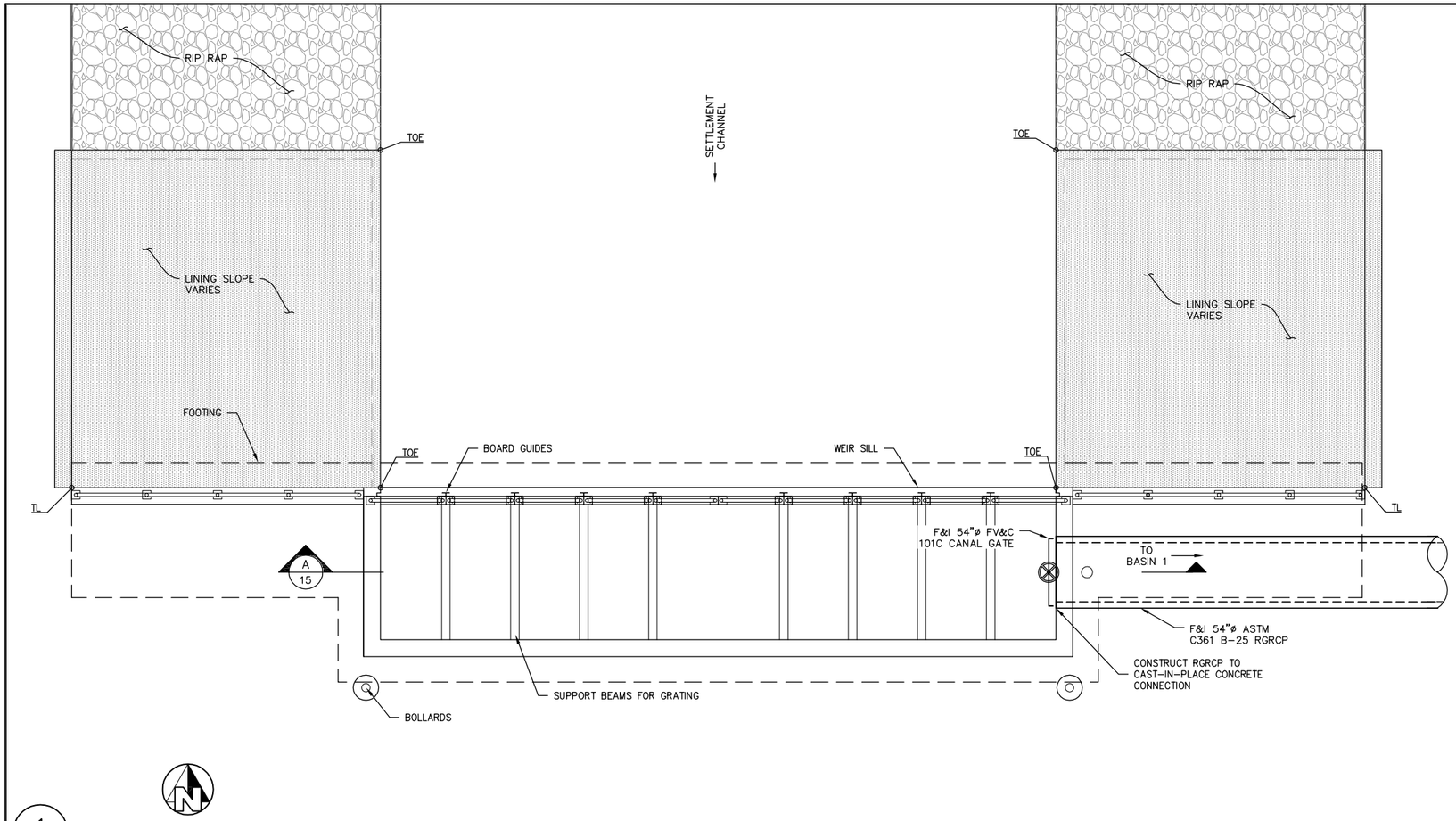

1/15 SCALE: NTS

DISTRIBUTION STRUCTURE – PLAN

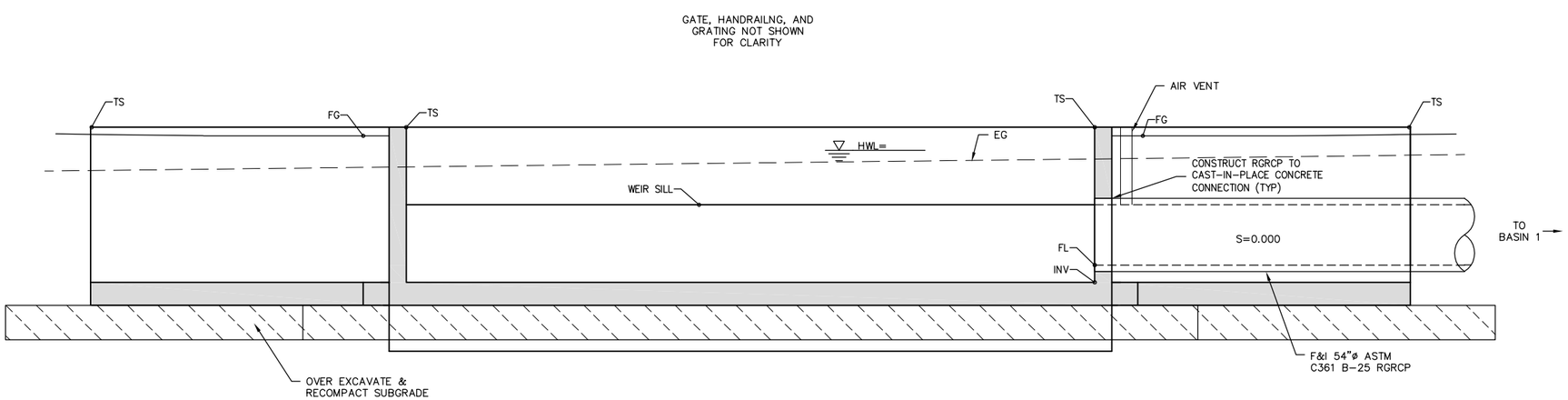

A/15 SCALE: NTS

SECTION A

WARNING
POWER LINES OVERHEAD

811 Know what's **below.** **Call** before you dig.

COPYRIGHT 2014 by PROVOST & PRITCHARD CONSULTING GROUP, dba PROVOST & PRITCHARD, Inc. expressly reserves its common law copyright and other property rights in these plans. These plans are not to be reproduced, changed or copied in any form or manner whatsoever, nor are they to be assigned to any third party without first obtaining the written permission and consent of Provost & Pritchard Engineering Group, Inc. In the event of unauthorized reuse of these plans by a third party, the third party shall hold the firm of Provost & Pritchard Engineering Group, Inc. harmless, and shall defend the firm of Provost & Pritchard Engineering Group, Inc.'s legal fees associated with defending and enforcing these rights.

No.	REVISION	BY	DATE

PRELIMINARY
05-20-2014

ADAMS & ACADEMY BASIN PROJECT
EARTHWORK & STRUCTURES
CONSOLIDATED IRRIGATION DISTRICT
FRESNO COUNTY, CA

DISTRIBUTION STRUCTURE

EST. 1968
PROVOST & PRITCHARD
CONSULTING GROUP
An Employee Owned Company
286 W. CESAR CHAVEZ AVENUE
FRESNO, CALIFORNIA 93711-6162
559/449-2700 FAX 559/449-2715
www.ppeng.com

DESIGN ENGINEER: ACC
LICENSE NO: 78242
DRAFTED BY: PPI
CHECKED BY:
DATE: 05-20-2014
JOB NO: 20041101

0 1
ORIGINAL SCALE SHOWN IS IN INCHES. ADJUST SCALE FOR REDUCED OR ENLARGED PLANS.

SHEET 4 OF 5

5/20/2014 7:44 AM G:\Clients\Consolidated ID-20041\20041101-New Banking Site Investigation\DWG\SHEET\4 DISTRIBUTION STRUCTURE.dwg -David Sorrick

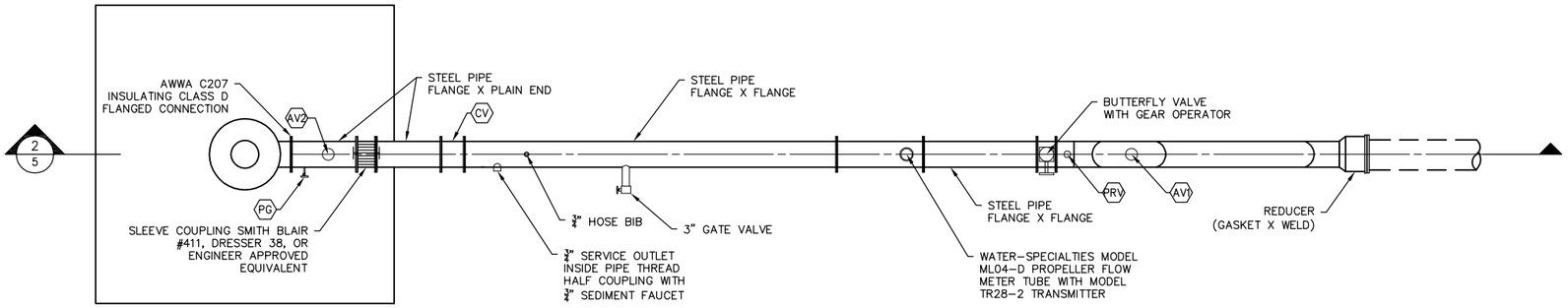

NOT TO SCALE

1
5

WELL HEAD IMPROVEMENTS

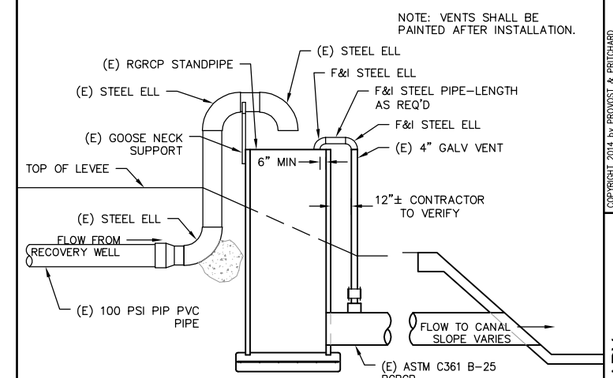

NOT TO SCALE

3
5

RECOVERY WELL OUTLET

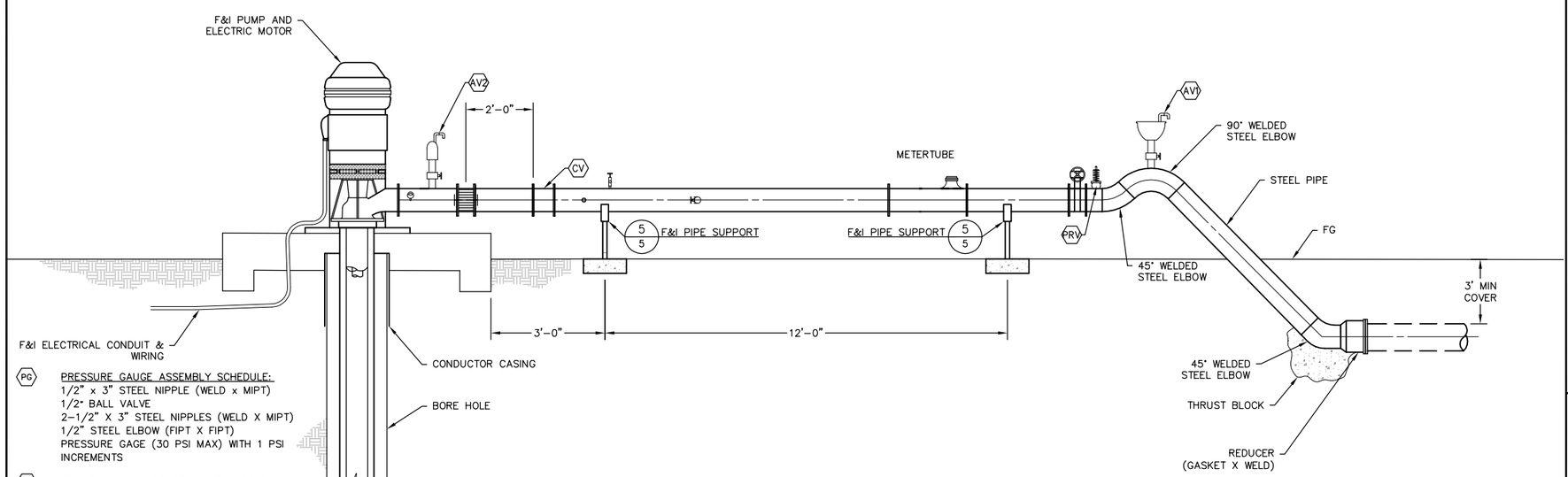

PG — PRESSURE GAUGE ASSEMBLY SCHEDULE:
1/2" x 3" STEEL NIPPLE (WELD x MIPT)
1/2" BALL VALVE
2-1/2" X 3" STEEL NIPPLES (WELD X MIPT)
1/2" STEEL ELBOW (FIPT X FIPT)
PRESSURE GAGE (30 PSI MAX) WITH 1 PSI INCREMENTS

AV1 — 3" AIR-VACUUM RELIEF VALVE ASSEMBLY
3" STEEL NIPPLE (WELD X MIPT)
3" BRASS GATE VALVE (FRESNO VALVE MODEL 6210 OR ENGINEER APPROVED EQUAL)
3" X 6" STEEL NIPPLE (MIPT X MIPT)
3" APCO COMBINATION AIR VALVE MODEL 147C (150 PSI) WITH 2-90° STREET ELBOWS

AV2 — 2" AIR-VACUUM RELIEF VALVE ASSEMBLY
2" STEEL NIPPLE (WELD X MIPT)
2" BRASS GATE VALVE (FRESNO VALVE MODEL 6210 OR ENGINEER APPROVED EQUAL)
2" X 6" STEEL NIPPLE (MIPT X MIPT)
2" APCO AIR RELEASE VALVE MODEL 200A.2 (150 PSI) WITH 2-90° STREET ELBOWS

CV — SPLIT DISC CHECK VALVE.
APCO SERIES 9000, CRANE DUO-CHECK II OR APPROVED EQUIVALENT

PRV — FRESNO VALVES & CASTINGS
PR-600 4" PRESSURE RELIEF VALVE

NOT TO SCALE

2
5

WELL HEAD SECTION

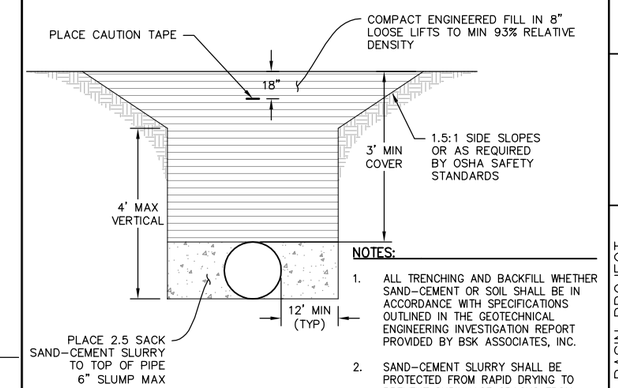

NOTES:

1. ALL TRENCHING AND BACKFILL WHETHER SAND-CEMENT OR SOIL SHALL BE IN ACCORDANCE WITH SPECIFICATIONS OUTLINED IN THE GEOTECHNICAL ENGINEERING INVESTIGATION REPORT PROVIDED BY BSK ASSOCIATES, INC.
2. SAND-CEMENT SLURRY SHALL BE PROTECTED FROM RAPID DRYING TO PREVENT SHRINKAGE CRACKS FROM DEVELOPING IN ACCORDANCE WITH THE GEOTECHNICAL ENGINEERING INVESTIGATION REPORT BY BSK ASSOCIATES, INC.

NOT TO SCALE

4
5

TYPICAL TRENCH DETAIL

DIMENSIONS (INCHES)					
PIPE SIZE	STRAP SIZE	THREAD STUD	BASE PLATE	EXTENSION PIPE REQ'D	MINIMUM DIST. TO FLOOR
12"	1/2"x2"	1"x6"	8"x8"x1/4"	2" SCH 40	9"
14"	5/8"x3"	1-1/2"x6"	8"x8"x1/2"	3" SCH 40	9-1/2"

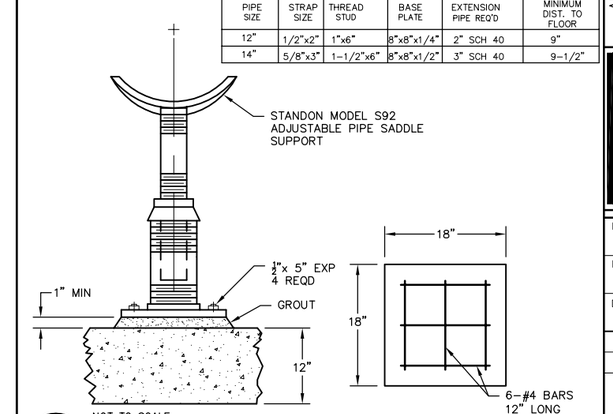

NOT TO SCALE

5
5

PIPE SUPPORT

COPYRIGHT 2014 by PROVOST & PRITCHARD ENGINEERING GROUP, INC. (PROVOST & PRITCHARD) The firm of Provost & Pritchard Engineering Group, Inc. expressly reserves its common law copyright and other property rights in these plans. These plans are not to be reproduced, changed or copied in any form or manner whatsoever, nor are they to be assigned to any third party without first obtaining the written permission and consent of Provost & Pritchard Engineering Group, Inc. In the event of unauthorized reuse of these plans by a third party, the third party shall hold the firm of Provost & Pritchard harmless, and shall defend the firm of Provost & Pritchard Engineering Group, Inc.'s legal fees associated with defending and enforcing these rights.

PRELIMINARY
05-20-2014

No.	REVISION	BY	DATE

ADAMS & ACADEMY BASIN PROJECT
EARTHWORK & STRUCTURES
CONSOLIDATED IRRIGATION DISTRICT
FRESNO COUNTY, CA

WELLHEAD IMPROVEMENTS

PROVOST & PRITCHARD
CONSULTING GROUP
An Employee Owned Company
7095 N. FRESNO STREET, SUITE 300
FRESNO, CALIFORNIA 93711-6162
559/449-2700 FAX 559/449-2715
www.ppeng.com

DESIGN ENGINEER: ACC
LICENSE NO: 78242
DRAFTED BY: PPI
CHECKED BY:
DATE: 05-20-2014
JOB NO: 20041101
0 1
ORIGINAL SCALE SHOWN IS IN INCHES. ADJUST SCALE FOR REDUCED OR ENLARGED PLANS.
SHEET 5 OF 5

5/20/2014 8:36 AM G:\Clients\Consolidated ID-200A\20041101-New Ranking Site Investigation\DWG\SHEET\5 WELLHEAD IMPROVEMENTS.dwg -David Sorrick

Attachment 4c

City of Fresno Property Ownership

POR. SEC. 1, T. 14 S., R. 19 E., M.D.B. & M.

Tax Area 5-642 98-220

326-14

— NOTE —
This map is for Assessment purposes only. It is not to be construed as portraying legal ownership or divisions of land for purposes of zoning or subdivision law.

1" = 200'

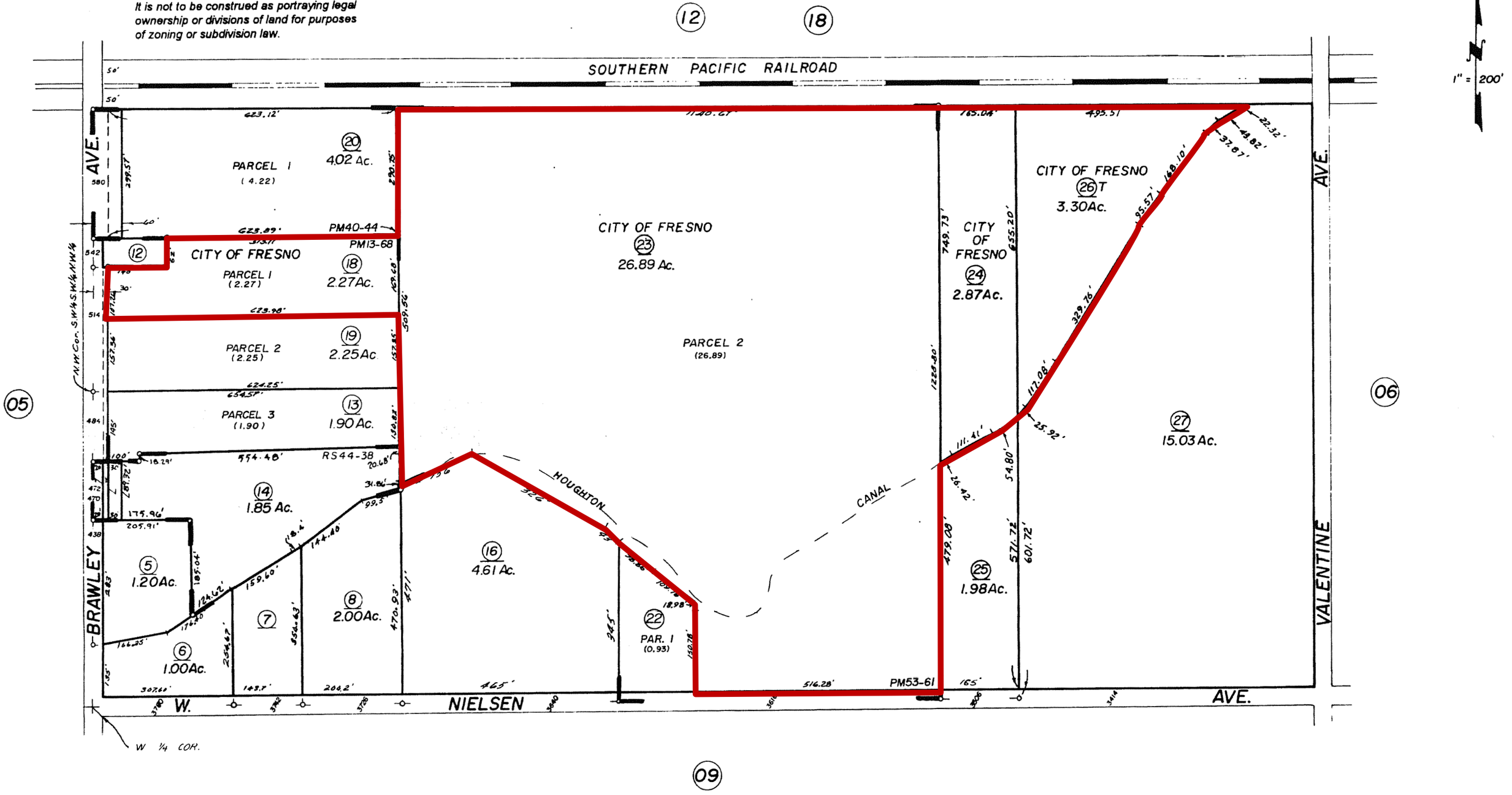

Agricultural Preserve
Parcel Map No. 2055 - Bk. 13, Pg. 68
Parcel Map No. 6260 - Bk. 40, Pg. 44
Parcel Map No. 7398 - Bk. 53, Pg. 61

Record of Survey - Bk. 44, Pg. 38

NOTE - Assessor's Block Numbers Shown in Ellipses.
Assessor's Parcel Numbers Shown in Circles.

Assessor's Map Bk. 326 - Pg. 14
County of Fresno, Calif.

1964

NOV 09 2011

Attachment 4d

City of Fresno Mitigated Negative Declaration Adoption

City of FRESNO **REPORT TO THE CITY COUNCIL**

AGENDA ITEM NO.
COUNCIL MEETING:
APPROVED BY
DEPARTMENT DIRECTOR
CITY MANAGER

March 17, 2011

FROM: PATRICK N. WIEMILLER, Director
Department of Public Works

BY: MARTIN A. QUERIN, P.E., Assistant Director
Department of Public Utilities – Water Division

SUBJECT: 1) ADOPT FINDINGS OF A MITIGATED NEGATIVE DECLARATION (STATE CLEARINGHOUSE NO. 2011021037) FOR ACQUISITION OF FOUR PARCELS COMPRISING 35.137 ACRES NEAR THE NORTHEAST CORNER OF BRAWLEY AND NIELSEN AVENUES (DISTRICT 3)

2) APPROVE THE 65th AMENDMENT TO THE ANNUAL APPROPRIATION RESOLUTION NO. 2010-138 APPROPRIATING $1,804,900 FOR ACQUISITION OF FOUR PARCELS COMPRISING 35.137 ACRES NEAR THE NORTHEAST CORNER OF BRAWLEY AND NIELSEN AVENUES FOR DEVELOPMENT OF A GROUNDWATER RECHARGE FACILITY

3) AUTHORIZE THE DIRECTOR OF PUBLIC WORKS OR HIS DESIGNEE TO SIGN ALL NECESSARY DOCUMENTS ON BEHALF OF THE CITY

RECOMMENDATIONS

Staff recommends that City Council:

1. Adopt the findings of the attached Mitigated Negative Declaration (MND) that with the project specific mitigation imposed, there is no substantial evidence in the record that the project may have a significant direct, or indirect or cumulative effects on the environment.

2. Approve the 65th Amendment to the Annual Appropriation Resolution (AAR) No. 2010-138 appropriating $1,804,900 for acquisition of those four parcels as shown in proximity in accordance with Exhibit 'A', and as further identified in Exhibit 'B' and described below:

   - 29.16 acres from the grantors: Mike J. and Tanya Kochergen (APN 326-140-18 and 326-140-23) located at 3616 West Nielsen Avenue for $1,500,000

   - 3.304 acres from the grantors: Clarence F. and Joyce Miranda (APN 326-140-11) located at 3414 West Nielsen for $168,504

   - 2.673 acres from the grantor: Mary Antunez Garcia (APN 326-140-10) located at 3506 West Nielsen for $136,323

3. Authorize the Director of Public Works, or his designee, to sign all necessary documents on behalf of the City.

EXECUTIVE SUMMARY

Historic use and multi-year drought have resulted in a state of groundwater overdraft. The City of Fresno's (City's) Urban Water Management Plan (UWMP) and the Metropolitan Water Resources Management Plan (MWRMP) require re-establishment of groundwater levels to a balanced and sustainable condition by the year 2025. To help mitigate this imbalance, Water Division needs to expand its groundwater recharge program by increasing the number of groundwater recharge sites. Those parcels noted above have been identified as prime recharge sites due to their exceptional recharge potential and proximity to Fresno Irrigation District's (FID's) Houghton canal (see attached Vicinity Map). The acquisition of these parcels will be a very important initial step in achieving a balanced groundwater condition and ensuring a sustainable and viable water supply is available for existing and future users.

BACKGROUND

The City utilizes surface water through allotments and entitlements from the Kings and San Joaquin watersheds respectively. These surface water sources are used for groundwater recharge and production of potable water at the City's Northeast Surface Water Treatment Facility. Groundwater recharge is necessary to replace a portion of the 150 million gallons per day (average) of groundwater that is delivered to our customers. Historically, even with the cooperative utilization of some Fresno Metropolitan Flood Control District (FMFCD) basins for groundwater recharge, "usage versus replacement" imbalances continue to grow, resulting in escalating annual groundwater deficits due to limited recharge facilities.

Expansion of the City's groundwater recharge program maintains several benefits to the City and its customers. One of these benefits includes strategically located recharge sites to help mitigate areas exhibiting groundwater contamination. Additionally, low-maintenance intentional groundwater recharge is the most economical method for replenishment of our aquifer.

As we continue to draw more water from our aquifer, groundwater levels drop, resulting in the deepening of existing wells, and significantly increased pump energy costs to maintain minimum water system pressures, and meet customer demands.

The subject sites have been chosen for several reasons. Results of a geotechnical investigation indicate underlying soils to be exceptionally favorable to recharge operations. Additionally, project construction costs will be minimized due to the proximity of FID's Houghton No. 78 Canal.

The City has prepared a MND to address the potential environmental effects of the proposed Nielsen Avenue Recharge Basin Project (Project). This document was prepared in accordance with the California Environmental Quality Act (CEQA), California Public Resources Code Section 21000 et.seq; the California CEQA guidelines (California Code of Regulations, Title 14, Section 15000 et seq); and the rules, regulations, and procedures for implementing CEQA as adopted by the City of Fresno.

Acquisition of these properties is an important initial step in meeting the City's Metropolitan Water Resources, and Urban Water Management Plan goals.

Area appraisals were performed by a certified appraiser. These parcels are currently unused and the owners are willing sellers at the indicated prices. The documents signed by the property owners have been approved as to form by the City Attorney's Office.

ENVIRONMENTAL FINDINGS

An environmental assessment initial study was prepared for this project in accordance with the requirements of the California Environmental Quality Act (CEQA) Guidelines. This process included the distribution of requests for comment from other responsible or affected agencies and interested organizations.

Preparation of the environmental assessment necessitated a thorough review of the proposed project and relevant environmental issues, and considered previously prepared environmental and technical studies including the 2025 Fresno General Plan, the Master Environmental Impact Report (MEIR No. 10130) for the 2025 Fresno General Plan and Mitigated Negative Declaration No. A-09-02 (Air Quality MND), as well as California DWR Bulletin 118-80 and the City's Fresno Metropolitan Water Resource Management Plan and Urban Water Management Plan goals.

The proposed project could have a potentially significant effect on the environment. Feasible mitigation measures or alternatives have been incorporated in order to avoid the effects or mitigate the effects to a point where clearly no significant effect on the environment will occur. The project specific mitigation measures included in the project to avoid potentially significant effects are set forth in the attached Initial Study, which is incorporated into this Mitigated Negative Declaration. With the project specific mitigation imposed, there is no substantial evidence in the record that this project may have a significant direct, indirect or cumulative effects on the environment. (CEQA Guidelines sections 15071(e) and 15369.5.)

Therefore, based on the attached environmental assessment and the list of identified mitigation measures, staff has determined the project will not have a significant impact on the environment and that the filing of a mitigated negative declaration is appropriate in accordance with the provisions of CEQA Guidelines, Sections 15071(e) and 15369.5. A public notice of the attached mitigated negative declaration finding for the Initial Study and Mitigated Negative Declaration (MND) was published on April 30, 2010 with four comments received within the 20 day comment period. To address these comments, subsequent (Phase II) investigations were performed to determine if existing conditions would pose any future liabilities. With the completion of these Phase II investigations, the MND was re-published on February 15, 2011 for 20 days, with one comment received.

FISCAL IMPACT

All costs for this property acquisition were approved and included in Water Division's FY2010 Water Capital Improvement Program budget within the Water Enterprise Fund (40101, WC00050). As part of developing the FY2011 Budget, it was estimated that the properties would be purchased during FY2010; thus, the funds were not carried over. The FY2012 requested budget will include funding for construction of the recharge basins and associated improvements necessary to complete the project. The acquisition and development of additional recharge basins within the city was in part included in the water rate model used to create the five year utility rate plan that was adopted by City Council on February 27, 2007 (Resolution 2007-79).

Attachments:

- Vicinity Map
- Notice of Intent
- Mitigated Negative Declaration
- AAR Resolution No. 2010- 138

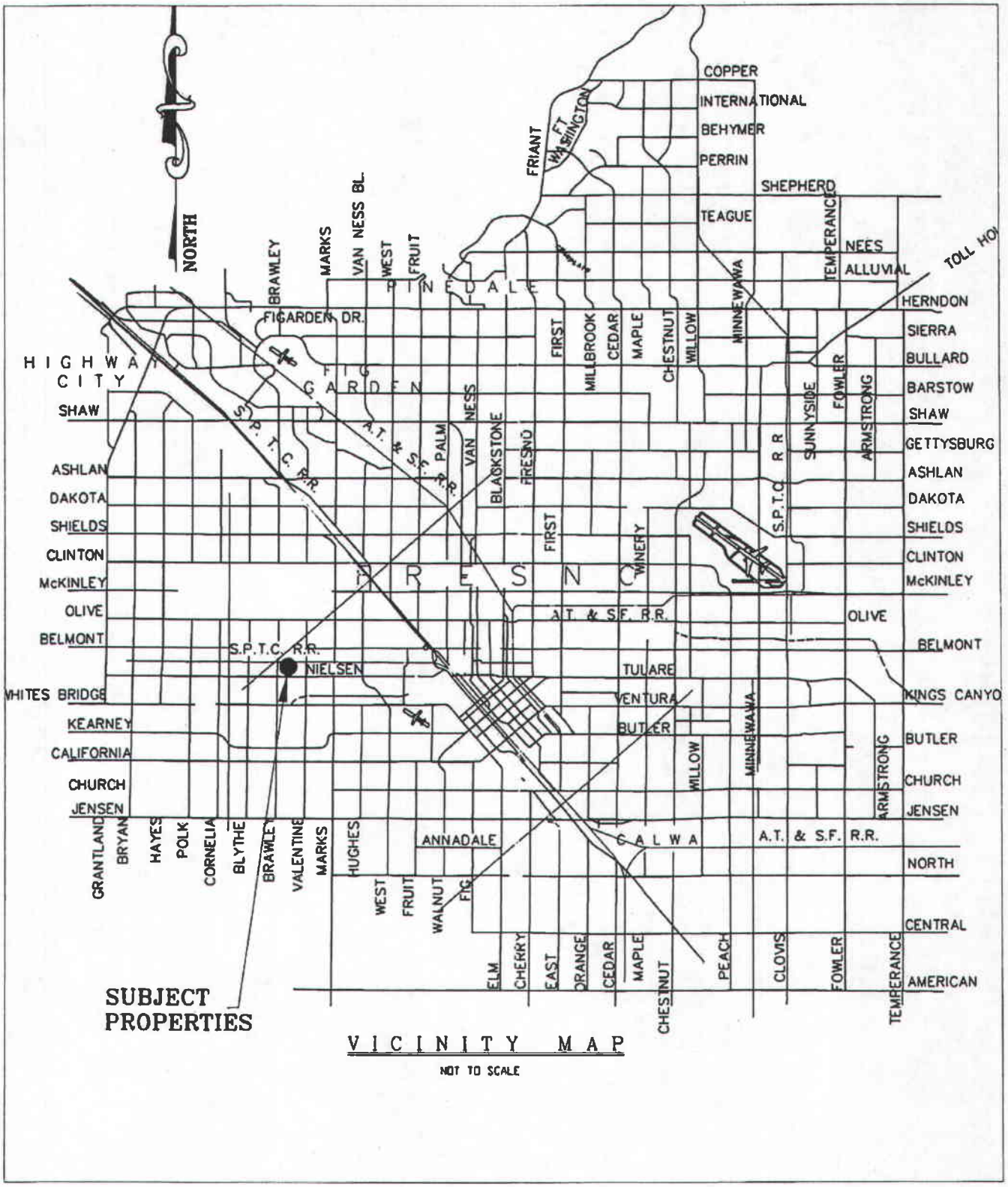

VICINITY MAP

NOT TO SCALE

CITY OF FRESNO	DEPT. OF PUBLIC UIILITIES	
EXHIBIT A NIELSEN AVE. RECHARGE BASIN PROJECT	DR. BY:	SHT 1 OF 1
	DATE 03-23-10	

FILED

FEB 15 2011

FRESNO COUNTY CLERK

By Sonia Ramirez DEPUTY

CITY OF FRESNO

NOTICE OF INTENT TO ADOPT MITIGATED NEGATIVE DECLARATION
FOR
THE NIELSEN AVENUE RECHARGE BASIN PROJECT

NOTICE IS HEREBY GIVEN as follows:

E201110000030

1. The City of Fresno (the "City") plans to adopt a revised mitigated negative declaration for the proposed acquisition, improvements, and operations of the Nielsen Avenue Recharge Basin Project. This document was circulated from April 30, 2010 to May 20, 2010 and received comments from Chevron and City of Fresno Airports Department. The comments received raised questions requiring further evaluation and recirculation of the mitigated negative declaration. The further evaluation has identified additional mitigation measures necessary to reduce the impacts to a less than significant level.

2. The Project proposes the acquisition of approximately 35 acres of property near the northeast corner of Brawley and Nielsen Avenues in Fresno County, California, for the construction of recharge basins, the construction of diversion turnouts from the Houghton Canal, and the installation of monitoring wells.

3. The public review period during which the City will receive comments on the proposed mitigated negative declaration will begin on February 15, 2011 and end on March 7, 2011. The public hearing will be held by the Fresno City Council on March 17, 2011, at Fresno City Hall Council Chambers, 2600 Fresno Street, 2nd Floor, Fresno, CA.

4. Copies of the proposed mitigated negative declaration and initial study are available for public review Monday through Friday from 8 am to 5 pm at Fresno City Hall, City Clerk's Office, located at 2600 Fresno Street, Fresno, CA 93721.

5. The contact person for the project is Lito Bucu, Supervising Engineering Technician, who may be reached by telephone at (559) 621-5323.

6. Comments on the proposed mitigated negative declaration should be in writing, if possible, and addressed to City of Fresno, Public Utilities Department, Water Division, ATTN: Lito Bucu, Supervising Engineering Technician, 1910 E. University Ave., Fresno, CA 93703. All comments should be received no later than 5 pm on March 7, 2011.

Dated: February 15, 2011

Lito Bucu, Supervising Engineering Technician

E201110000030

RESOLUTION NO. _____

A RESOLUTION OF THE COUNCIL OF THE CITY OF FRESNO ADOPTING THE 65th AMENDMENT TO THE ANNUAL APPROPRIATION RESOLUTION NO. 2010-138 APPROPRIATING $1,804,900 FOR ACQUISITION OF FOUR PARCELS COMPRISING 35.137 ACRES NEAR THE NORTHEAST CORNER OF BRAWLEY AND NIELSEN AVENUES FOR DEVELOPMENT OF A GROUNDWATER RECHARGE FACILITY

BE IT RESOLVED BY THE COUNCIL OF THE CITY OF FRESNO:

THAT PART III of the Annual Appropriation Resolution No. 2010-138 be and is hereby amended as follows:

	Increase/(Decrease)
TO: PUBLIC UTILITIES DEPARTMENT	
Water Enterprise	$ 1,804,900

THAT account titles and numbers requiring adjustment by this Resolution are as follows:

Water Enterprise	
Revenues:	
Account: **30101** Transfer from Fund Balance	$ 1,804,900
Fund: **40101**	
Org Unit: **411501**	
Total Revenues	$ 1,804,900
Appropriations:	
Account: **57101** Land Acquisition	$ 1,804,900
Fund: **40101**	
Org Unit: **411501**	
Project ID: **WC00050**	
CS: **SQ002**	
Total Appropriations	$ 1,804,900

THAT the purpose is to appropriate $1,804,900 for acquisition of four parcels comprising 35.137 acres near the northeast corner of Brawley and Nielsen Avenues for development of a groundwater recharge facility.

CLERK'S CERTIFICATION

STATE OF CALIFORNIA }
COUNTY OF FRESNO } ss.
CITY OF FRESNO }

I, REBECCA E. KLISCH, City Clerk of the City of Fresno, certify that the foregoing Resolution was adopted by the Council of the City of Fresno, California, at a regular meeting thereof, held on the _____ Day of _____, 2011

AYES:
NOES:
ABSENT:
ABSTAIN:

Mayor Approval: _____, 2011
Mayor Approval/No Return: _____, 2011
Mayor Veto: _____, 2011
Council Override Veto: _____, 2011

REBECCA E. KLISCH
City Clerk

_____

Attachment 4e

City of Fresno Preliminary Plans

CITY OF FRESNO

FRESNO COUNTY, CA

NIELSEN RECHARGE BASIN

APN 326-140-10, 11, 18 AND 23

WARNING
POWER LINES OVERHEAD

811 Know what's **below.** **Call** before you dig.

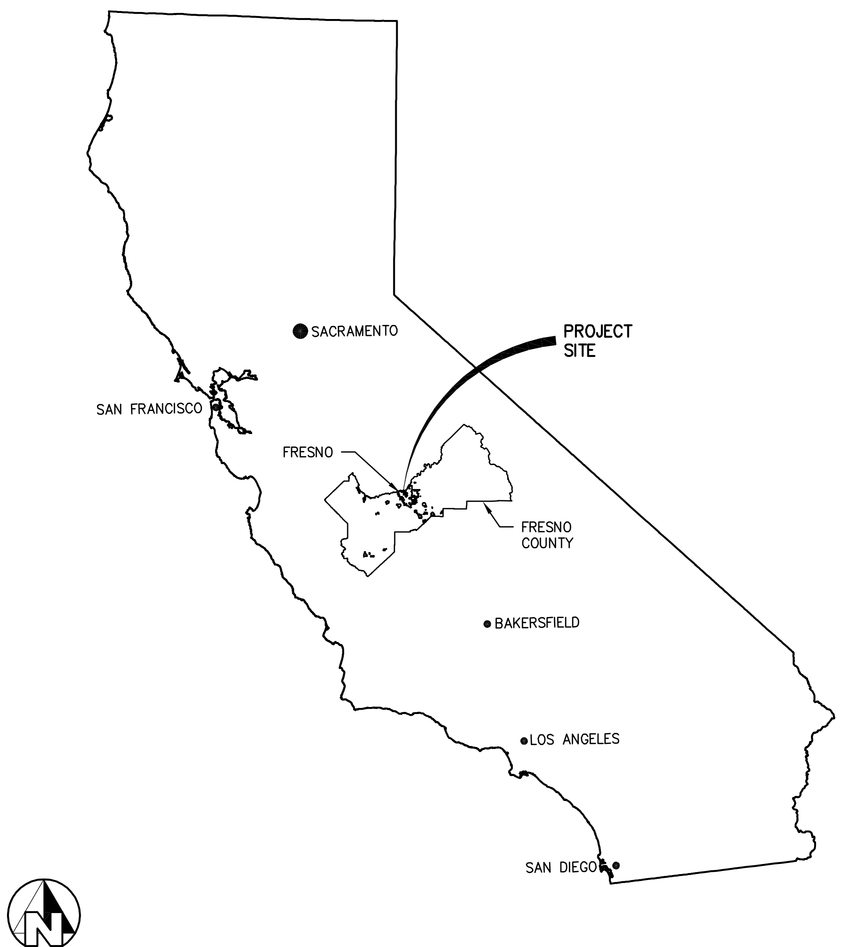

LOCATION MAP

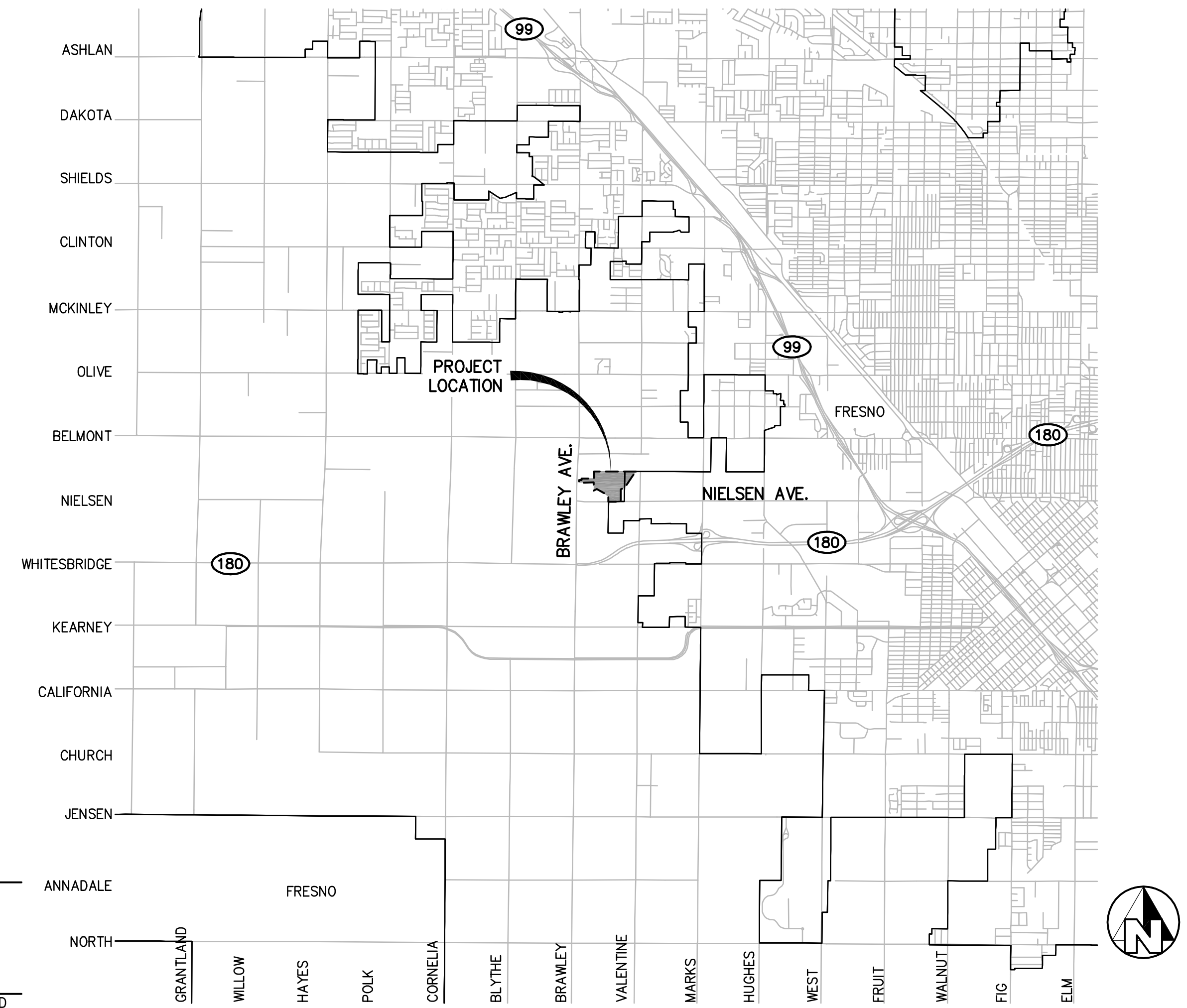

VICINITY MAP

GENERAL NOTES

1. CITY OF FRESNO, DEPARTMENT OF PUBLIC UTILITIES, WATER DIVISION (559-621-5300) SHALL BE CONTACTED AT LEAST 48 HOURS PRIOR TO COMMENCEMENT OF WORK ON OR NEAR EXISTING DISTRICT FACILITIES.
2. USED MATERIAL, REJECTS, MISFITS, OR SECONDS, ETC. ARE NOT ACCEPTABLE FOR USE ON CITY OF FRESNO FACILITIES.
3. ALL CONSTRUCTION SHALL BE IN CONFORMANCE WITH THESE PLANS, PROJECT SPECIFICATIONS AND CITY OF FRESNO SPECIFICATIONS.
4. CONTRACTOR SHALL FIELD VERIFY THE HORIZONTAL AND VERTICAL LOCATIONS OF ALL EXISTING FACILITIES PRIOR TO COMMENCING WORK. CALL UNDERGROUND SERVICE ALERT (USA) AT 8-1-1. CONTRACTOR SHALL MAKE ENGINEER AWARE OF ANY DISCREPANCIES.
5. ALL CAST-IN-PLACE CONCRETE STRUCTURES SHALL BE FORMED INSIDE AND OUT AND CONCRETE VIBRATED SUFFICIENTLY TO PROVIDE FOR SMOOTH SURFACED WALLS/FLOORS WITHOUT VOIDS AND HONEYCOMBS.
6. FRESNO IRRIGATION DISTRICT (FID) SHALL INSPECT ALL WORK PHASES ON IRRIGATION FACILITIES FOR CONFORMANCE TO FID SPECIFICATIONS. REINFORCING SHALL NOT BE ENCASED IN CONCRETE WITHOUT PRIOR FID INSPECTIONS. LIKEWISE, CONCRETE SHALL NOT BE COVERED WITH EARTH PRIOR TO FID INSPECTION.
7. CONCRETE DESIGN MIX SHALL BE SUBMITTED TO THE ENGINEER FOR REVIEW AND APPROVAL. ALL CONCRETE SHALL HAVE A 28-DAY MINIMUM COMPRESSIVE STRENGTH OF 3000 PSI UNLESS OTHERWISE SPECIFIED.
8. ALL STEEL PIPE AND FITTINGS SHALL BE FURNISHED WITH A SHOP APPLIED HIGH SOLIDS EPOXY COATING ON THE INTERIOR AND EXTERIOR, UNLESS OTHERWISE INDICATED. ALL OTHER EXPOSED STEEL SHALL BE PAINTED WITH A PRE-TREATMENT PRIMER, AN UNDERCOAT AND A FINAL COAT OF PAINT IN ACCORDANCE WITH CITY OF FRESNO SPECIFICATIONS.
9. ALL NUTS, BOLTS, AND WASHERS USED TO SECURE UNDERGROUND FITTINGS SHALL BE STAINLESS STEEL. AFTER INSTALLATION, ALL STEEL HARDWARE SHALL BE COATED WITH A RUST PREVENTATIVE, WRAPPED WITH 4 MIL POLYETHYLENE SHEETING, AND SECURE WITH PVC TAPE.
10. THRUST RESTRAINTS TO BE PROVIDED AT ALL PIPELINE BENDS, WHETHER OR NOT SHOWN ON THE PLANS.
11. ALL CONSTRUCTION SHALL BE PERFORMED IN ACCORDANCE WITH APPLICABLE HEALTH AND SAFETY LAWS OF THE STATE OF CALIFORNIA AND CAL/OSHA STANDARDS.
12. TRENCH BACKFILL AND RESERVOIR EMBANKMENTS SHALL BE COMPACTED IN ACCORDANCE WITH THE SPECIFICATIONS AND THE GEOTECHNICAL REPORT CONTAINED IN THE SPECIFICATIONS.
13. CONTRACTOR WILL BE RESPONSIBLE FOR THE REPAIR OF ALL PIPELINE CRACKS, WHICH DEVELOP DURING CONSTRUCTION OF IMPROVEMENTS AFFECTING EXISTING FACILITIES.
14. CONCRETE VAULTS AND BOXES MAY BE PURCHASED FROM A PRECAST MANUFACTURER OR CONTRACTOR MAY CONSTRUCT THE STRUCTURES IF STRUCTURAL CALCULATIONS AND DESIGN IS APPROVED BY THE CITY OF FRESNO AND THE ENGINEER.
16. ALL EXCESS MATERIAL AND/OR DEBRIS SHALL BE REMOVED UPON COMPLETION OF INSTALLATION.
17. CONTRACTOR SHALL BE RESPONSIBLE FOR PROVIDING ADEQUATE DUST CONTROL AT ALL TIMES.

SPECIAL NOTE

WHERE UNDERGROUND AND SURFACE STRUCTURES ARE SHOWN ON THE PLANS, THE LOCATIONS, DEPTH AND DIMENSIONS OF STRUCTURES ARE BELIEVED TO BE REASONABLY CORRECT, BUT ARE NOT GUARANTEED. SUCH STRUCTURES ARE SHOWN FOR THE INFORMATION OF THE CONTRACTOR, BUT INFORMATION SO GIVEN IS NOT TO BE CONSTRUED AS A REPRESENTATION THAT SUCH STRUCTURES WILL, IN ALL CASES, BE FOUND WHERE SHOWN, OR THAT THEY REPRESENT ALL OF THE STRUCTURES WHICH MAY BE ENCOUNTERED.

SITE SAFETY AND PROTECTION NOTES

THE DUTY OF THE ENGINEER, OWNER OR ITS AGENTS TO CONDUCT CONSTRUCTION REVIEW OF THE CONTRACTOR'S PERFORMANCE AND THE UNDERTAKING OF INSPECTIONS OR THE GIVING OF INSTRUCTIONS AS AUTHORIZED HEREIN IS NOT INTENDED TO INCLUDE REVIEW OF THE ADEQUACY OF THE CONTRACTOR'S SAFETY MEASURES IN, ON, OR NEAR THE CONSTRUCTION SITE AND SHALL NOT BE CONSTRUED AS SUPERVISION OF THE ACTUAL CONSTRUCTION NOR MAKE THE ENGINEER, OWNER OR ITS AGENTS RESPONSIBLE FOR PROVIDING A SAFE PLACE FOR THE PERFORMANCE OF WORK BY THE CONTRACTOR, SUBCONTRACTORS, OR SUPPLIERS, OR FOR ACCESS, VISITS, USE, WORK, TRAVEL OR OCCUPANCY BY ANY PERSON.

THE CONTRACTOR SHALL HAVE AT THE WORK SITE, COPIES OR SUITABLE EXTRACTS OF CONSTRUCTION SAFETY ORDERS, ISSUED BY CAL-OSHA. CONTRACTOR SHALL COMPLY WITH PROVISIONS OF THESE AND ALL OTHER APPLICABLE LAWS, ORDINANCES AND REGULATIONS. THE CONTRACTOR MUST COMPLY WITH PROVISIONS OF THE SAFETY AND HEALTH REGULATIONS FOR CONSTRUCTION, PROMULGATED BY THE SECRETARY OF LABOR UNDER SECTION 107 OF THE CONTRACT WORK HOURS AND SAFETY STANDARDS ACT, AS SET FORTH IN TITLE 29 C.F.R.

TO PROTECT THE LIVES AND HEALTH OF CONTRACTOR'S EMPLOYEES UNDER THE CONTRACT, THE CONTRACTOR SHALL COMPLY WITH ALL PERTINENT PROVISIONS OF THE "MANUAL OF ACCIDENT PREVENTION IN CONSTRUCTION" ISSUED BY THE ASSOCIATED GENERAL CONTRACTORS OF AMERICA, INC., AND SHALL MAINTAIN AN ACCURATE RECORD OF ALL CASES OF DEATH, OCCUPATIONAL DISEASE, AND INJURY REQUIRING MEDICAL ATTENTION OR CAUSING LOSS OF TIME FROM WORK, ARISING OUT OF AND IN THE COURSE OF EMPLOYMENT OR WORK UNDER THE CONTRACT.

THE CONTRACTOR ALONE SHALL BE RESPONSIBLE FOR THE SAFETY, EFFICIENCY, AND ADEQUACY OF CONTRACTOR'S FACILITIES, APPLIANCES, AND METHODS AND FOR ANY DAMAGE, WHICH MAY RESULT FROM THEIR FAILURE OR THEIR IMPROPER CONSTRUCTION, MAINTENANCE OR OPERATION.

THE CONTRACTOR AGREES THAT IT SHALL ASSUME SOLE AND COMPLETE RESPONSIBILITY FOR JOB SITE CONDITIONS DURING THE COURSE OF CONSTRUCTION OF THIS PROJECT, INCLUDING SAFETY OF ALL PERSONS AND PROPERTY; THAT THIS REQUIREMENT SHALL APPLY CONTINUOUSLY AND NOT BE LIMITED TO NORMAL WORKING HOURS; AND THAT THE CONTRACTOR SHALL DEFEND, INDEMNIFY AND HOLD THE OWNER, PROVOST & PRITCHARD CONSULTING GROUP, AND THEIR RESPECTIVE AGENTS HARMLESS FROM ANY AND ALL LIABILITY, REAL OR ALLEGED, IN CONNECTION WITH THE PERFORMANCE OF WORK ON THIS PROJECT, EXCEPTING FOR LIABILITY ARISING FROM THE SOLE NEGLIGENCE OF OWNER, ENGINEER, OR THEIR RESPECTIVE AGENTS.

THE OWNER AND ITS AGENTS' SITE RESPONSIBILITIES ARE LIMITED SOLELY TO THE ACTIVITIES OF THEIR EMPLOYEES ON SITE. THESE RESPONSIBILITIES SHALL NOT BE INFERRED BY ANY PARTY TO MEAN THAT THE OWNER OR ITS AGENTS HAVE RESPONSIBILITY FOR SITE SAFETY. SAFETY IN, ON, OR ABOUT THE SITE IS THE SOLE AND EXCLUSIVE RESPONSIBILITY OF THE CONTRACTOR ALONE. THE CONTRACTOR'S METHODS OF WORK PERFORMANCE, SUPERINTENDENCE AND THE CONTRACTOR'S EMPLOYEES, AND SEQUENCING OF CONSTRUCTION ARE ALSO THE SOLE AND EXCLUSIVE RESPONSIBILITIES OF THE CONTRACTOR ALONE.

TOPOGRAPHY NOTE

TOPOGRAPHY SHOWN IS BASED ON FIELD SURVEYS PERFORMED BY PROVOST & PRITCHARD IN JANUARY 2013.

BOUNDARY NOTE

THE BOUNDARY/RIGHT-OF-WAY INFORMATION SHOWN ON THESE PLANS IS BASED UPON RECORD INFORMATION, TIED TO PHYSICAL MONUMENTS, AND WAS PREPARED UNDER THE DIRECTION OF BRYAN W. BOWERS, PLS. 8469.

PROJECT BENCHMARK

ALL ELEVATIONS SHOWN ARE BASED ON FRESNO COUNTY BENCHMARK JJ-141(#116): 284.023'(CITY ELEV. = 244.046'). BENCHMARK IS BRASS CAP LOCATED 28.8' WEST OF CL OF VALENTINE, 40.0' WEST OF McKINLEY, AND 1.0' NORTH OF JOINT POLE.

HORIZONTAL POSITIONS BASED ON GPS OBSERVATIONS USING A BASE ONSITE AT POINT #1.

PROFESSIONAL LAND SURVEYOR BRYAN W. BOWERS No. 8469 STATE OF CALIFORNIA

DATE SIGNED: ________

NOTES

CUT FILL BASED ON FINAL GRADES SHOWN ON PLANS

CUT = 94,048 CU YD
FILL = 26,169 CU YD

APPROXIMATE BALANCED CUT FILL NUMBERS

CUT = 34,379 CU YD
FILL = 27,407 CU YD *
ASSUME 25% SHRINKAGE

* CUT FILL ANALYSIS ASSUMES A FLAT BOTTOM BASINS IN CELLS 2 AND 3. BASIN DAYLIGHTS TO EXISTING GRADE IN CELL 1.

APPROVALS

--APPROVAL 1--	DATE
--APPROVAL 2--	DATE

SHEET INDEX

SHEET NO.	DESCRIPTION
1	COVER
2	NOTES AND LEGEND
3	SITE PLAN
4	DEMO PLAN
5 **	HORIZONTAL CONTROL
6	GRADING PLAN-CELL 1
7	GRADING PLAN-CELL 2
8	GRADING PLAN-CELL 3
9	GRADING PLAN-SETTLING CHANNEL
10	GRADING PLAN-ACCESS ROAD
11	LEVEE SECTIONS 1
12	LEVEE SECTIONS 2
13	LEVEE SECTIONS 3
14	TYPICAL LEVEE SECTIONS
15	FENCE SITE PLAN
16	CANAL SITE PLAN
17	CANAL CROSS SECTIONS
18	CANAL DETAILS
19	PROJECT TURNOUT
20	PROJECT TURNOUT DETAILS
21	DISTRIBUTION STRUCTURE
22	REPLOGLE FLUME
23**	REPLOGLE FLUME DETAILS
24	BASIN CELL 1 AND 2 INLETS
25	BASIN CELL 3 INLET
26	CHAIN LINK FENCE DETAILS
27	CONSTRUCTION DETAILS 1
28	CONSTRUCTION DETAILS 2
29	CONSTRUCTION DETAILS 3
30	CONSTRUCTION DETAILS 4
31	CONSTRUCTION DETAILS 5
32**	INSTRUMENTATION DIAGRAM
33**	ELECTRICAL PLAN 1
34**	ELECTRICAL PLAN 2

** TO BE SUBMITTED AT 90% SUBMITTAL

COPYRIGHT 2014 by PROVOST & PRITCHARD ENGINEERING GROUP, INC. ALL RIGHTS RESERVED
The firm of Provost & Pritchard Engineering Group, Inc. expressly reserves its common law copyright and other applicable property rights in these plans. These plans are not to be reproduced, changed, or copied in any form or manner whatsoever, nor are they to be assigned to a third party without first obtaining the written permission and consent of Provost & Pritchard Engineering Group, Inc. In the event of unauthorized reuse of these plans by a third party, the third party shall hold the firm of Provost & Pritchard Engineering Group, Inc. harmless, and shall bear the cost of Provost & Pritchard Engineering Group, Inc.'s legal fees associated with defending and enforcing these rights.

PRELIMINARY
NOT FOR CONSTRUCTION
3/13/14

No.	REVISION	BY	DATE

REGISTERED PROFESSIONAL ENGINEER RANDY S. HOPKINS II No. 63538 Civil STATE OF CALIFORNIA

DATE SIGNED: ________

NIELSEN RECHARGE BASIN
APN 326-140-10, 11, 18 AND 23
CITY OF FRESNO
FRESNO COUNTY, CA

COVER

EST. 1968
PROVOST & PRITCHARD
CONSULTING GROUP
An Employee Owned Company
2505 ALLUVIAL AVENUE
CLOVIS, CALIFORNIA 93611-9166
559/326-1100 FAX 559/326-1090
www.ppeng.com

DESIGN ENGINEER: RANDY HOPKINS
LICENSE NO: 63538
DRAFTED BY: ---- CHECKED BY: ----
DATE: 3/13/14
JOB NO: 156112C1

0 1
ORIGINAL SCALE SHOWN IS IN INCHES. ADJUST SCALE FOR REDUCED OR ENLARGED PLANS.

3/13/2014 10:58 AM V:\Clients\Fresno City of-1561\156112C1-Nielsen Recharge Basin\DWG\SHEET\1 COVER.dwg -Gabriel Do Reynoso

ABBREVIATIONS

AB	AGGREGATE BASE
AC	ASPHALT CONCRETE
ACP	ASBESTOS–CEMENT PIPE
AGG	AGGREGATE
AH	AHEAD
ALT	ALTERNATE
AP	ANGLE POINT
APPROX	APPROXIMATE
APN	ASSESSOR'S PARCEL NUMBER
ARV	AIR RELIEF VALVE
ASTM	AMERICAN SOCIETY FOR TESTING AND MATERIALS
AV	AIR VENT
AVE	AVENUE
AWWA	AMERICAN WATER WORKS ASSOCIATION
BAL	APPROX BALANCED DIRT TOE
BC	BEGIN CURVE
BFP	BACKFLOW PREVENTOR
BK	BACK
BLDG	BUILDING
BM	BENCHMARK
BO	BOLLARD
BTM	BOTTOM
BVC	BEGIN VERTICAL CURVATURE
BW	BACK OF WALK
BWL	BACK OF WALL
CA	CALIFORNIA
CFS	CUBIC FEET PER SECOND
CI	CAST IRON
CIP	CAST IRON PIPE
CIPCP	CAST–IN–PLACE CONCRETE PIPE
CL	CLASS
℄	CENTERLINE
CLF	CHAIN LINK FENCE
CLR	CLEARANCE
CMLC	CEMENT MORTAR LINED & COATED
CMP	CORRUGATED METAL PIPE
CNS	COMPACTED NATIVE SOIL
CO	SEWER CLEAN OUT
CONC	CONCRETE
CONT	CONTINUOUS
CONST	CONSTRUCT/CONSTRUCTION
COR	CORNER
CORP	CORPORATION
COUP	COUPLING
CP	CONTROL POINT
CR	CROWN
CU	CUBIC
CY	CUBIC YARDS
DA	DRIVE APPROACH
DEMO	DEMOLISH/DEMOLITION
DI	DROP INLET
DIA, ø	DIAMETER
DIM	DIMENSION
DIP	DUCTILE IRON PIPE
D/S	DOWNSTREAM
DW	DRIVEWAY
DWG	DRAWING
(E)	EXISTING
EA	EACH
EC	END CURVE
ECC	ECCENTRIC
EF	EACH FACE
EG	EXISTING GRADE
EL, ELEV	ELEVATION
ELC	EPOXY LINED & COATED
ELEC	ELECTRIC
ELL	ELBOW
EM	ELECTRIC METER
EOL	END OF LINE
EP	EDGE OF PAVEMENT
EQUIV	EQUIVALENT
ESMT	EASEMENT
EVC	END VERTICAL CURVE
EW	EACH WAY
EXP	EXPOSED
F&I	FURNISH & INSTALL
FF	FINISHED FLOOR
FG	FINISHED GRADE
FH	FIRE HYDRANT
℄, FL	FLOW LINE
FLG	FLANGE
FLGD	FLANGED
FM	FORCE MAIN
FNC	FENCE
FRP	FIBER REINFORCED POLYESTER PIPE
FT	FOOT/FEET
FW	FRONT OF WALK
FWL	FACE OF WALL
GA	GAUGE
GAL	GALLON
GALV	GALVANIZED
GB	GRADE BREAK
GM	GAS METER
GPM	GALLONS PER MINUTE
GS	GAS
GSV	GAS VALVE
GUY	GUY WIRE
GV	GATE VALVE
HD	HEAD
HDPE	HIGH DENSITY POLYETHYLENE
HGL	HYDRAULIC GRADE LINE
HORIZ	HORIZONTAL
HP	HINGE POINT
HP	HORSEPOWER
HP GAS	HIGH PRESSURE GAS
HPS	HIGH PRESSURE SWITCH
HR	HANDRAIL
HWL	HIGH WATER LEVEL
HYDRO	HYDROPNUEMATIC
ID	INSIDE DIAMETER
IN	INCH
INV	INVERT
IP	IRON PIPE
IRR	IRRIGATION
JP	JUNCTION POLE
LBS	POUNDS
LC	LENGTH OF CURVE
LCW	LONG CRESTED WEIR
LF	LINEAR FEET
LG	LONG
LT	LEFT
MAX	MAXIMUM
MB	MAILBOX
MCC	MOTOR CONTROL CENTER
MFR	MANUFACTURER
MH	MANHOLE
MIN	MINIMUM
MISC	MISCELLANEOUS
MJ	MECHANICAL JOINT
MP	MEDIUM PRESSURE GAS LINE
MPT	MALE PIPE THREAD
MS	MILD STEEL
NAVD	NORTH AMERICAN VERTICAL DATUM
NC	NORMALLY CONSOLIDATED
NGVD	NATIONAL GEODETIC VERTICAL DATUM
NIC	NOT IN CONTRACT
NPT	NATIONAL PIPE THREAD
NTS	NOT TO SCALE
OC	ON CENTER
OD	OUTSIDE DIAMETER
OH	OVERHEAD
OP	OPERATING
OSHA	OCCUPATIONAL SAFETY & HEALTH ADMINISTRATION
O&M	OPERATIONS & MAINTENANCE
(P)	PROPOSED
PB	PULL BOX
PC	POINT OF CURVATURE
PCC	POINT OF COMPOUND CURVATURE
PE	PERMANENT EASEMENT
PI	POINT OF INTERSECTION
PIP	PLASTIC IRRIGATION PIPE
PLC	PROGRAMMABLE LOGIC CONTROLLER
ℓ	PROPERTY LINE
POC	POINT ON CURVE
POL	POINT ON LINE
POT	POINT ON TANGENT
PP	POWER POLE
PRC	POINT OF REVERSE CURVATURE
PRV	PRESSURE REDUCING VALVE
PSF	POUNDS PER SQUARE FOOT
PSI	POUNDS PER SQUARE INCH
PT	POINT OF TANGENCY
PVC	POLYVINYL CHLORIDE
PVCC	POINT OF VERTICAL COMPOUND CURVATURE
PVMT	PAVEMENT
PVRC	POINT OF VERTICAL REVERSE CURVATURE
PVI	POINT OF VERTICAL INTERSECTION
R	RADIUS
RC	RADIUS OF CURVE
RCP	REINFORCED CONCRETE PIPE
RD	RELATIVE DENSITY
RE	REFERENCE
REQD	REQUIRED
RET	RETURN
REV	REVISION
RGRCP	RUBBER GASKETED REINFORCED CONCRETE PIPE
RGS	RIGID GALVANIZED STEEL
RP	RADIUS POINT
RR	RAILROAD
RT	RIGHT
RTU	REMOTE TERMINAL UNIT
R/W	RIGHT OF WAY
(S)	SOLVENT WELD
S	SLIP
S=	SLOPE
SCH	SCHEDULE
SCP	STANDARD CONCRETE PIPE
SD	STORM DRAIN
SEC	SECTION
SF	SQUARE FEET
SIM	SIMILAR
SP	SERVICE POLE
SPEC	SPECIFICATION
SQ	SQUARE
SS	SANITARY SEWER
SS OR STS	STAINLESS STEEL
STA	STATION
STD	STANDARD
STL	STEEL
STP	STAND PIPE
SWL	SWALE
STWL	STILLING WELL
(T)	THREADED
T	THREAD
T&B	TOP & BOTTOM
TB	TOP OF BANK
TBM	TEMPORARY BENCHMARK
TC	TOP OF CURB
TCE	TEMPORARY CONSTRUCTION EASEMENT
TDI	TENSILE DUCTILE IRON
TELE	TELEPHONE
TF	TOP OF FOOTING
TFC	TOP FACE OF CURB
TG	TOP OF GRATE
TL	TOP OF LINING
TOE	TOE OF SLOPE
TOP	TOP OF SLOPE
TP	TELEPHONE POLE
TR	TELEPHONE RISER
TRANS	TRANSFORMER
TS	TOP OF STRUCTURE
TSB	TELEPHONE SPLICE BOX
TYP	TYPICAL
TWL	TOP OF WALL
UG	UNDERGROUND
UP	UTILITY POLE
U/S	UPSTREAM
ULT	ULTIMATE
VCP	VERIFIED CLAY PIPE
VERT	VERTICAL
VG	VALLEY GUTTER
VLT	VAULT
W	WATER
WL	WATER LINE
WM	WATER METER
WS	WATER SERVICE
WV	WATER VALVE
WW	WASTE WATER
W/	WITH
W/O	WITHOUT

LINETYPES

LINETYPE (EXISTING / NEW)

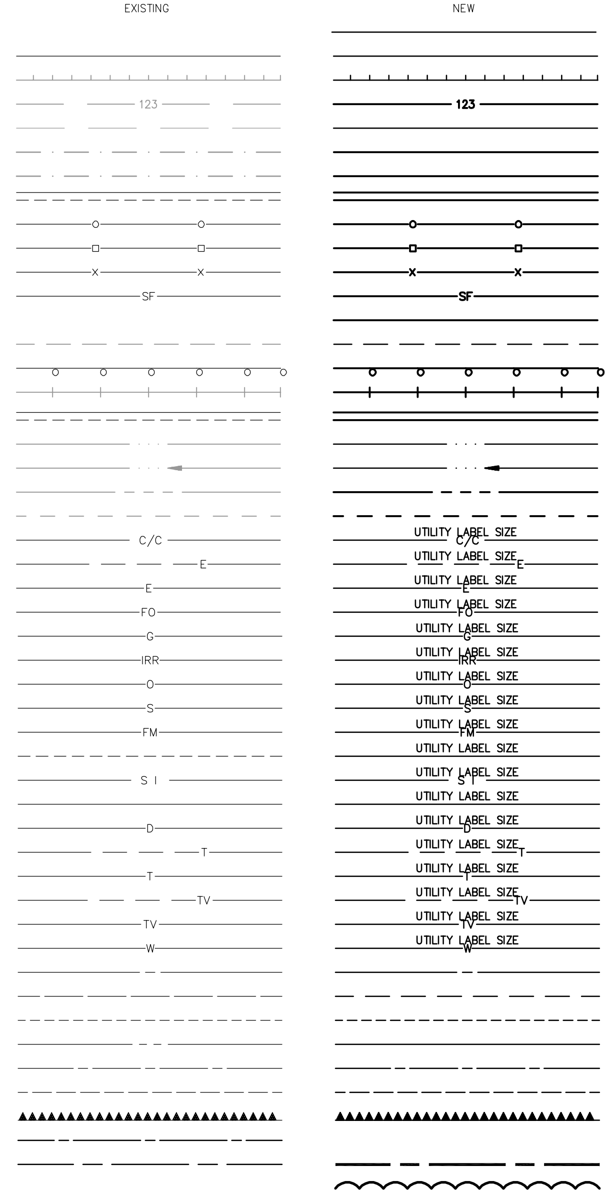

DESCRIPTION

- WATER LEVEL
- BARRICADE
- CONTOUR (DEPRESSION)
- CONTOUR (MAJOR)
- CONTOUR (MINOR)
- EMBANKMENT TOE
- EMBANKMENT TOP
- FENCE (BLOCK WALL)
- FENCE (CHAIN LINK)
- FENCE (WOOD)
- FENCE (WIRE)
- FENCE (SILT)
- GATE SWING
- GRADE BREAK
- GUARDRAIL
- RAILROAD
- RETAINING WALL
- SWALE CENTERLINE
- SWALE W/FLOW ARROWS
- WATER (LAKE/POND)
- WATER (MARSH/SWAMP)
- COMPUTER/COMM. (BURIED)
- ELECTRIC (AERIAL)
- ELECTRIC (BURIED)
- FIBER–OPTIC
- GAS
- IRRIGATION
- OIL
- SANITARY SEWER
- SANITARY SEWER FORCE MAIN
- SANITARY SEWER LATERAL
- SIGNAL INTERCONNECT (BURIED)
- STEAM
- STORM DRAINAGE
- TELEPHONE (AERIAL)
- TELEPHONE (BURIED)
- TELEVISION (AERIAL LINE)
- TELEVISION (BURIED LINE)
- WATER
- CENTERLINE
- EASEMENT
- MEANDER LINE
- PROPERTY LINE
- RESERVATION/PARK/FOREST
- RIGHT–OF–WAY
- RELINQUISH ACCESS LINE
- SECTION LINE
- STATE/COUNTY/CORPORATE LIMIT
- REVISION CLOUD

HATCHES

HATCH TYPE (EXISTING / NEW)

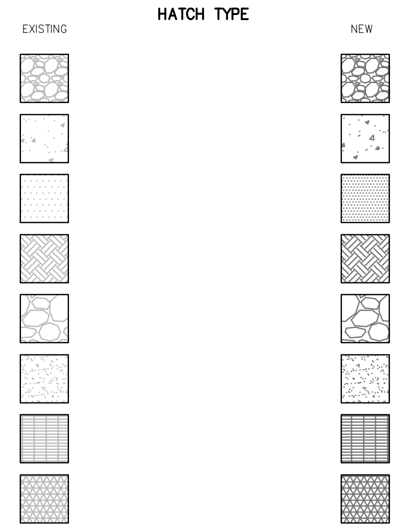

DESCRIPTION

- AGGREGATE
- CONCRETE
- CONCRETE LINING (PLAN VIEW)
- EARTH
- RIP RAP
- SAND
- GRATING
- EXPANDED METAL

SYMBOLS

SYMBOL (EXISTING / PROPOSED)

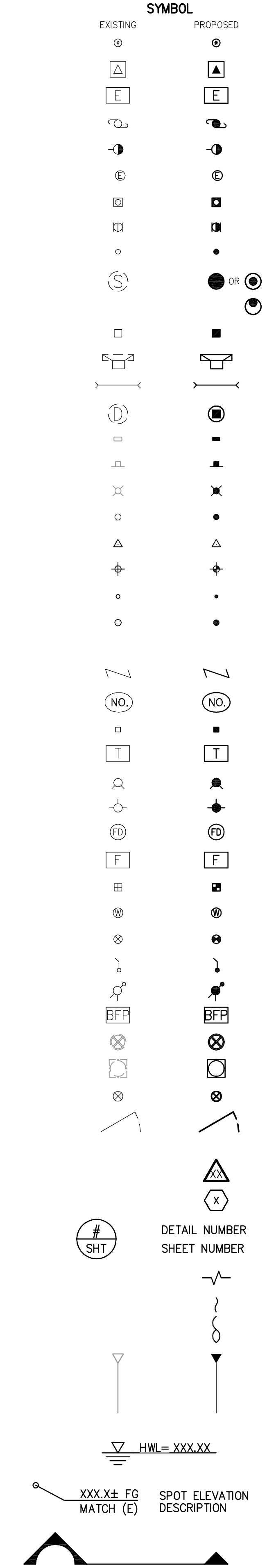

DESCRIPTION

- ELECTRIC METER
- PAD MOUNTED TRANSFORMER
- ELECTRIC VAULT
- UTILITY POLE
- UTILITY POLE ANCHOR
- ELECTRIC MANHOLE
- GAS METER
- GAS VALVE
- SAN. SEWER CLEAN OUT
- SAN. SEWER MANHOLE
- SSMH (ECCENTRIC CONE)
- STORM DRAIN CATCH BASIN
- STORM DRAIN INLET
- STORM DRAIN CULVERT
- STORM DRAIN MANHOLE
- MAIL BOX
- SIGN
- YARD LIGHT
- GUARD POST
- CONTROL POINT
- BENCH MARK
- IRON PIPE
- BLOCK CORNER MONUMENT
- OWNERSHIP TIE
- LOT NUMBER
- TELEPHONE RISER
- TELEPHONE VAULT
- 2–NOZZLE HYDRANT
- 3–NOZZLE HYDRANT
- FIRE DEPT. CONNECTION
- FIRE VAULT
- WATER METER
- WELL
- WATER VALVE
- BLOW–OFF
- AIR RELIEF VALVE
- BACK FLOW PREVENTOR
- GATE VALVE HANDLE
- STILLING WELL
- FENCE POST
- FENCE GATE
- REVISION
- CONSTRUCTION CALLOUT
- DETAIL CALLOUT
- LINE BREAK
- PIPE END (SCHEMATIC)
- PIPE END
- EMBANKMENT ARROW
- HIGH WATER LINE
- SPOT ELEVATION
- SECTION VIEW

COPYRIGHT 2014 by PROVOST & PRITCHARD ENGINEERING GROUP, INC. ALL RIGHTS RESERVED
The firm of Provost & Pritchard Engineering Group, Inc. expressly reserves its common law copyright and other applicable property rights in these plans. These plans are not to be reproduced, changed, or copied in any form or manner whatsoever, nor are they to be assigned to a third party without first obtaining the written permission and consent of Provost & Pritchard Engineering Group, Inc. In the event of unauthorized reuse of these plans by a third party, the third party shall hold the firm of Provost & Pritchard Engineering Group, Inc. harmless, and shall bear the cost of Provost & Pritchard Engineering Group, Inc.'s legal fees associated with defending and enforcing these rights.

No.	REVISION	BY	DATE

PRELIMINARY
NOT FOR CONSTRUCTION
3/13/14

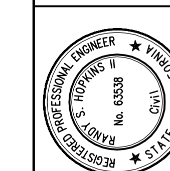

DATE SIGNED:

NIELSEN RECHARGE BASIN
APN 326–140–10, 11, 18 AND 23
CITY OF FRESNO
FRESNO COUNTY, CA

NOTES AND LEGEND

EST. 1968
PROVOST & PRITCHARD
CONSULTING GROUP
An Employee Owned Company
2505 ALLUVIAL AVENUE
CLOVIS, CALIFORNIA 93611–9166
559/326–1100 FAX 559/326–1090
www.ppeng.com

DESIGN ENGINEER: RANDY HOPKINS
LICENSE NO: 63538
DRAFTED BY: ––––
CHECKED BY: ––––
DATE: 3/13/14
JOB NO: 156112C1

0 1
ORIGINAL SCALE SHOWN IS IN INCHES. ADJUST SCALE FOR REDUCED OR ENLARGED PLANS.

SHEET 2 OF 34

3/13/2014 10:58 AM V:\Clients\Fresno City of–1561\156112C1–Nielsen Recharge Basin\DWG\SHEET\2 NOTES AND LEGEND.dwg –Gabriel De Reynoso

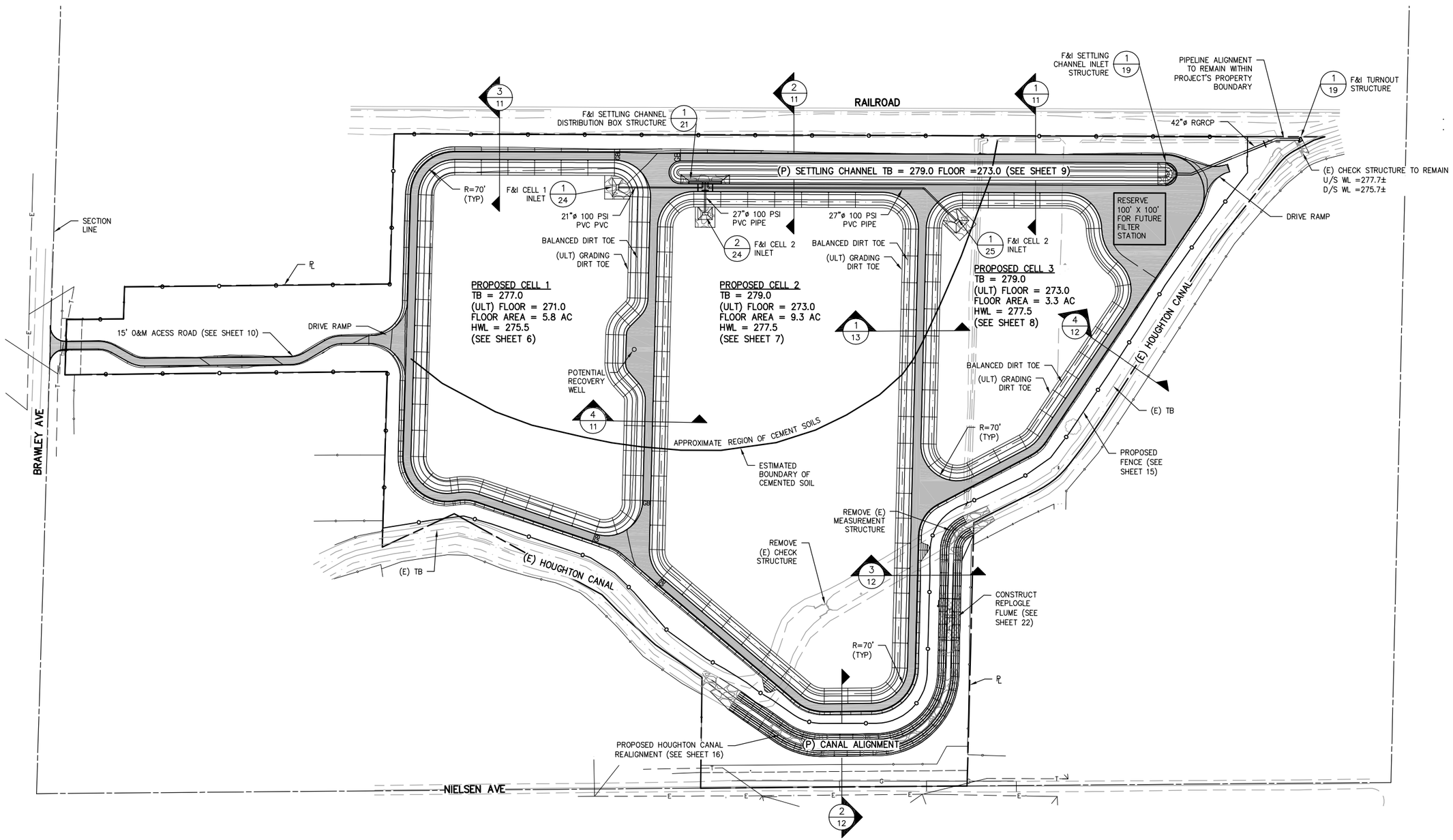

WARNING
POWER LINES OVERHEAD

811 Know what's **below.** **Call** before you dig.

COPYRIGHT 2014 by PROVOST & PRITCHARD ENGINEERING GROUP, INC. (PROVOST & PRITCHARD GROUP, Inc.) The firm of Provost & Pritchard Engineering Group, Inc. expressly reserves its common law copyright and other property rights in these plans. These plans are not to be changed or copied in any form or manner whatsoever, nor are they to be assigned to any third party, without first obtaining the written permission and consent of Provost & Pritchard Engineering Group, Inc. In the event of unauthorized reuse of these plans by a third party, the third party shall hold the firm of Provost & Pritchard Engineering Group, Inc. harmless, and shall defend and indemnify Provost & Pritchard Engineering Group, Inc.'s legal fees associated with defending and enforcing these rights.

PRELIMINARY
NOT FOR CONSTRUCTION
3/13/14

No.	REVISION	BY	DATE

REGISTERED PROFESSIONAL ENGINEER
RANDY S. HOPKINS
No. 63538
Civil
STATE OF CALIFORNIA

DATE SIGNED:

NIELSEN RECHARGE BASIN
APN 326-140-10, 11, 18 AND 23
CITY OF FRESNO
FRESNO COUNTY, CA

SITE PLAN

EST. 1961
PROVOST & PRITCHARD
CONSULTING GROUP
An Employee Owned Company
7095 N. ARIES AVENUE
CLOVIS, CALIFORNIA 93611-9166
559/326-1100 FAX 559/326-1090
www.ppeng.com

DESIGN ENGINEER: RANDY HOPKINS
LICENSE NO: 63538
DRAFTED BY: ----
CHECKED BY: ----
DATE: 3/13/14
JOB NO: 156112C1

0 1
ORIGINAL SCALE SHOWN IS IN INCHES. ADJUST SCALE FOR REDUCED OR ENLARGED PLANS.

SCALE IN FEET
0 50 100 200

SHEET 3 OF 34

3/13/2014 10:59 AM V:\Clients\Fresno City of-1561\156112C1-Nielsen Recharge Basin\DWG\SHEET\3. SITE PLAN.dwg -Gabriel Do Reynoso

WARNING
POWER LINES OVERHEAD

811
Know what's **below.**
Call before you dig.

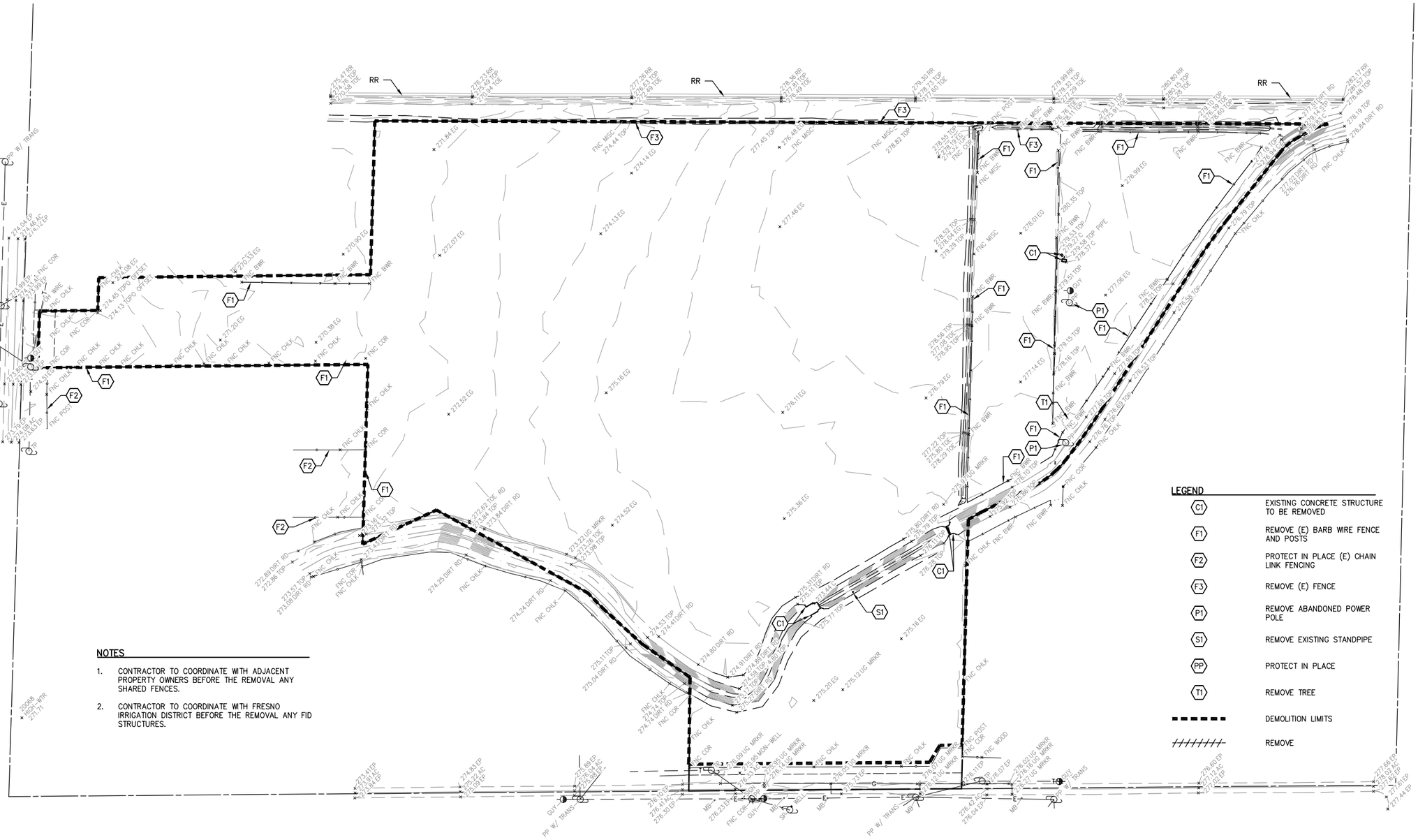

NOTES

1. CONTRACTOR TO COORDINATE WITH ADJACENT PROPERTY OWNERS BEFORE THE REMOVAL ANY SHARED FENCES.
2. CONTRACTOR TO COORDINATE WITH FRESNO IRRIGATION DISTRICT BEFORE THE REMOVAL ANY FID STRUCTURES.

SCALE IN FEET
0 50 100 200

COPYRIGHT 2014 by PROVOST & PRITCHARD CONSULTING GROUP (Provost & Pritchard Engineering Group, Inc.) This plan set is the property of Provost & Pritchard Engineering Group, Inc. expressly reserves its common law copyright and other property rights in these plans. These plans are not to be changed or copied in any form or manner whatsoever, nor are they to be assigned to any third party without first obtaining the written permission and consent of Provost & Pritchard Engineering Group, Inc. In the event of unauthorized reuse of these plans by a third party, the third party shall hold the firm of Provost & Pritchard Engineering Group, Inc. harmless, and shall reimburse the firm of Provost & Pritchard Engineering Group, Inc.'s legal fees associated with defending and enforcing these rights.

No.	REVISION	BY	DATE

PRELIMINARY
NOT FOR CONSTRUCTION
3/13/14

REGISTERED PROFESSIONAL ENGINEER
RANDY S. HOPKINS
No. 63538
Civil
STATE OF CALIFORNIA

DATE SIGNED: _____

NIELSEN RECHARGE BASIN
APN 326-140-10, 11, 18 AND 23
CITY OF FRESNO
FRESNO COUNTY, CA

DEMO PLAN

EST. 1968
PROVOST & PRITCHARD
CONSULTING GROUP
147 Emerson Avenue Clovis Company
2290 SOUTH LAMON AVENUE
CLOVIS, CALIFORNIA 93611-9166
559/326-1100 FAX 559/326-1090
www.ppeng.com

DESIGN ENGINEER: RANDY HOPKINS
LICENSE NO: 63538
DRAFTED BY: ----
CHECKED BY: ----
DATE: 3/13/14
JOB NO: 156112C1

0 1
ORIGINAL SCALE SHOWN IS IN INCHES. ADJUST SCALE FOR REDUCED OR ENLARGED PLANS.

3/13/2014 10:59 AM V:\Clients\Fresno City of-156112\156112C1-Nielsen Recharge Basin\DWG\SHEET1.4 DEMO PLAN.dwg -Gabriel Do Reverso

WARNING
POWER LINES OVERHEAD

811
Know what's **below.**
Call before you dig.

TO BE SUBMITTED AT 90% SUBMITTAL

COPYRIGHT 2014 by PROVOST & PRITCHARD ENGINEERING GROUP, INC. (PROVOST & PRITCHARD)
The firm of Provost & Pritchard Engineering Group, Inc. expressly reserves its common law copyright and other property rights in these plans. These plans are not to be altered or copied in any form or manner whatsoever, nor are they to be assigned to any third party without first obtaining the written permission and consent of Provost & Pritchard Engineering Group, Inc. In the event of unauthorized reuse of these plans by a third party, the third party shall hold the firm of Provost & Pritchard Engineering Group, Inc. harmless, and shall indemnify the firm of Provost & Pritchard Engineering Group, Inc.'s legal fees associated with defending and enforcing these rights.

PRELIMINARY
NOT FOR CONSTRUCTION
3/13/14

No.	REVISION	BY	DATE

REGISTERED PROFESSIONAL ENGINEER
RANDY S. HOPKINS
No. 63538
Civil
STATE OF CALIFORNIA

DATE SIGNED: _____

NIELSEN RECHARGE BASIN
APN 326-140-10, 11, 18 AND 23
CITY OF FRESNO
FRESNO COUNTY, CA

HORIZONTAL CONTROL

FST 21631
PROVOST & PRITCHARD
CONSULTING GROUP
An Employee Owned Company
750 N. GRANTO AVENUE
CLOVIS, CALIFORNIA 93611-9166
559/326-1100 FAX 559/326-1090
www.ppeng.com

DESIGN ENGINEER:
RANDY HOPKINS

LICENSE NO:
63538

DRAFTED BY:	CHECKED BY:
----	----

DATE: 3/13/14

JOB NO: 156112C1

0 1
ORIGINAL SCALE SHOWN IS IN INCHES. ADJUST SCALE FOR REDUCED OR ENLARGED PLANS.

SHEET
5 OF 34

3/13/2014 10:59 AM V:\Clients\Fresno City of-15611\156112C1-Nielsen Recharge Basin\DWG\SHEET\5 HORIZONTAL CONTROL.dwg -Gabriel Do Revenoso

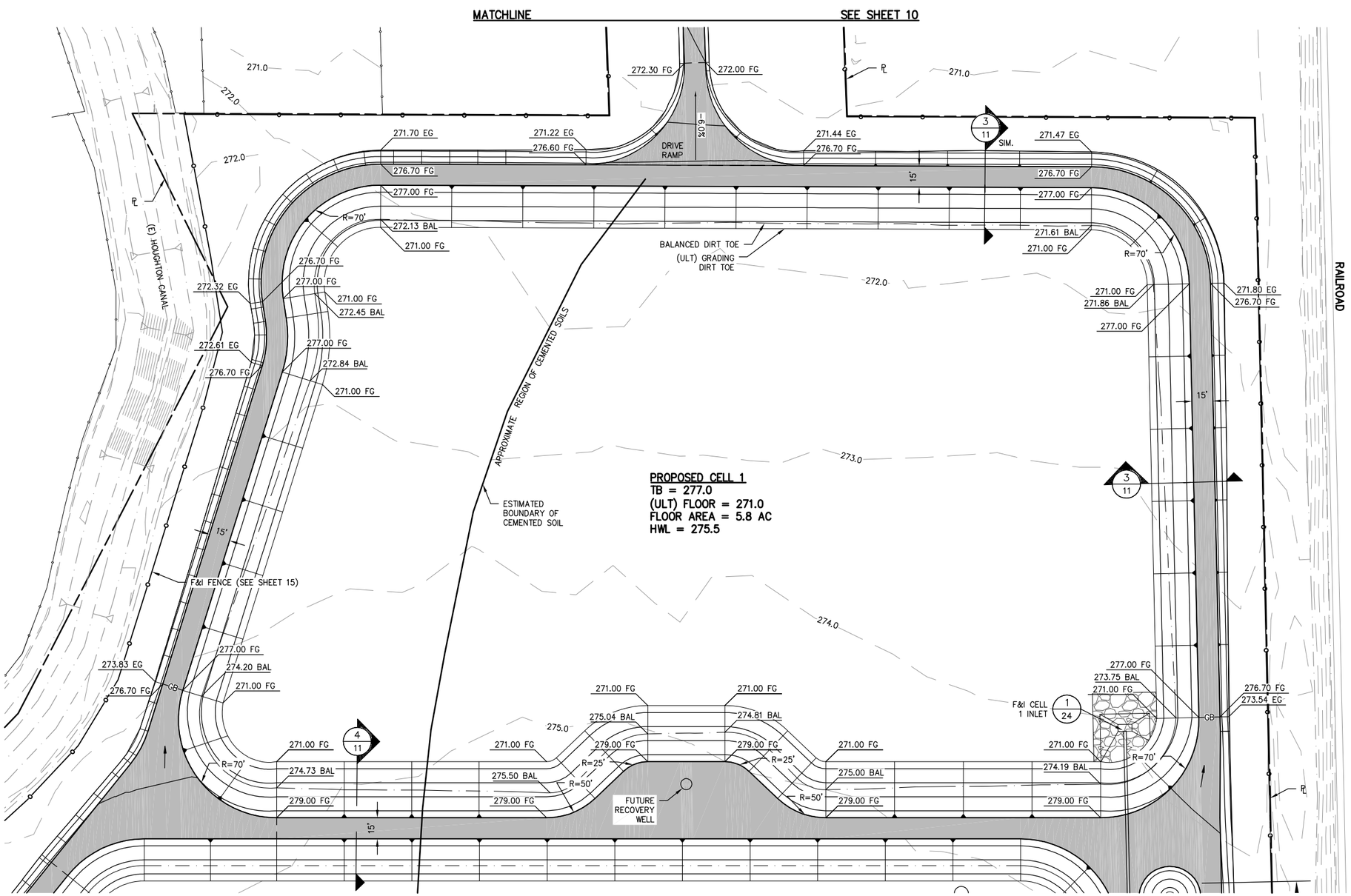

WARNING
POWER LINES
OVERHEAD

811
Know what's **below.**
Call before you dig.

SCALE IN FEET
0 20 40 80

COPYRIGHT 2014 by PROVOST & PRITCHARD CONSULTING GROUP (formerly Provost & Pritchard Engineering Group, Inc.) expressly reserves its common law copyright and other property rights in these plans. These plans are not to be changed or copied in any form or manner whatsoever, nor are they to be assigned to any third party without first obtaining the written permission and consent of Provost & Pritchard Engineering Group, Inc. In the event of unauthorized reuse of these plans by a third party, the third party shall hold the firm of Provost & Pritchard Engineering Group, Inc. harmless, and shall have the liquidated damages awarded to Provost & Pritchard Engineering Group, Inc.'s legal fees associated with defending and enforcing these rights.

No.	REVISION	BY	DATE

PRELIMINARY
NOT FOR CONSTRUCTION
3/13/14

REGISTERED PROFESSIONAL ENGINEER
RANDY S. HOPKINS
No. 63538
Civil
STATE OF CALIFORNIA

DATE SIGNED: ____

NIELSEN RECHARGE BASIN
APN 326-140-10, 11, 18 AND 23
CITY OF FRESNO
FRESNO COUNTY, CA

GRADING PLAN-CELL 1

PROVOST & PRITCHARD
CONSULTING GROUP
An Employee Owned Company
2205 ALLUVIAL AVENUE
CLOVIS, CALIFORNIA 93611-9166
559/326-1100 FAX 559/326-1090
www.ppeng.com

DESIGN ENGINEER:
RANDY HOPKINS

LICENSE NO:
63538

DRAFTED BY: ----
CHECKED BY: ----

DATE: 3/13/14

JOB NO: 156112C1

0 1
ORIGINAL SCALE SHOWN IS IN INCHES. ADJUST SCALE FOR REDUCED OR ENLARGED PLANS.

SHEET
6 OF 34

3/13/2014 10:59 AM V:\Clients\Fresno City of-1561\156112C1-Nielsen Recharge Basin\DWG\SHEET\6 GRADING PLAN-CEL1 1.dwg -Gabriel Da Revosco

WARNING
POWER LINES OVERHEAD

811 Know what's **below.** **Call** before you dig.

COPYRIGHT 2014 by PROVOST & PRITCHARD ENGINEERING GROUP, INC. (PROVOST & PRITCHARD). The firm of Provost & Pritchard Engineering Group, Inc. expressly reserves its common law copyright and other property rights in these plans. These plans are not to be altered or copied in any form or manner whatsoever, nor are they to be assigned to any third party without first obtaining the written permission and consent of Provost & Pritchard Engineering Group, Inc. In the event of unauthorized reuse of these plans by a third party, the third party shall hold the firm of Provost & Pritchard Engineering Group, Inc. harmless, and shall defend at its own expense and indemnify Provost & Pritchard Engineering Group, Inc.'s legal fees associated with defending and enforcing these rights.

MATCHLINE

SEE SHEET 6

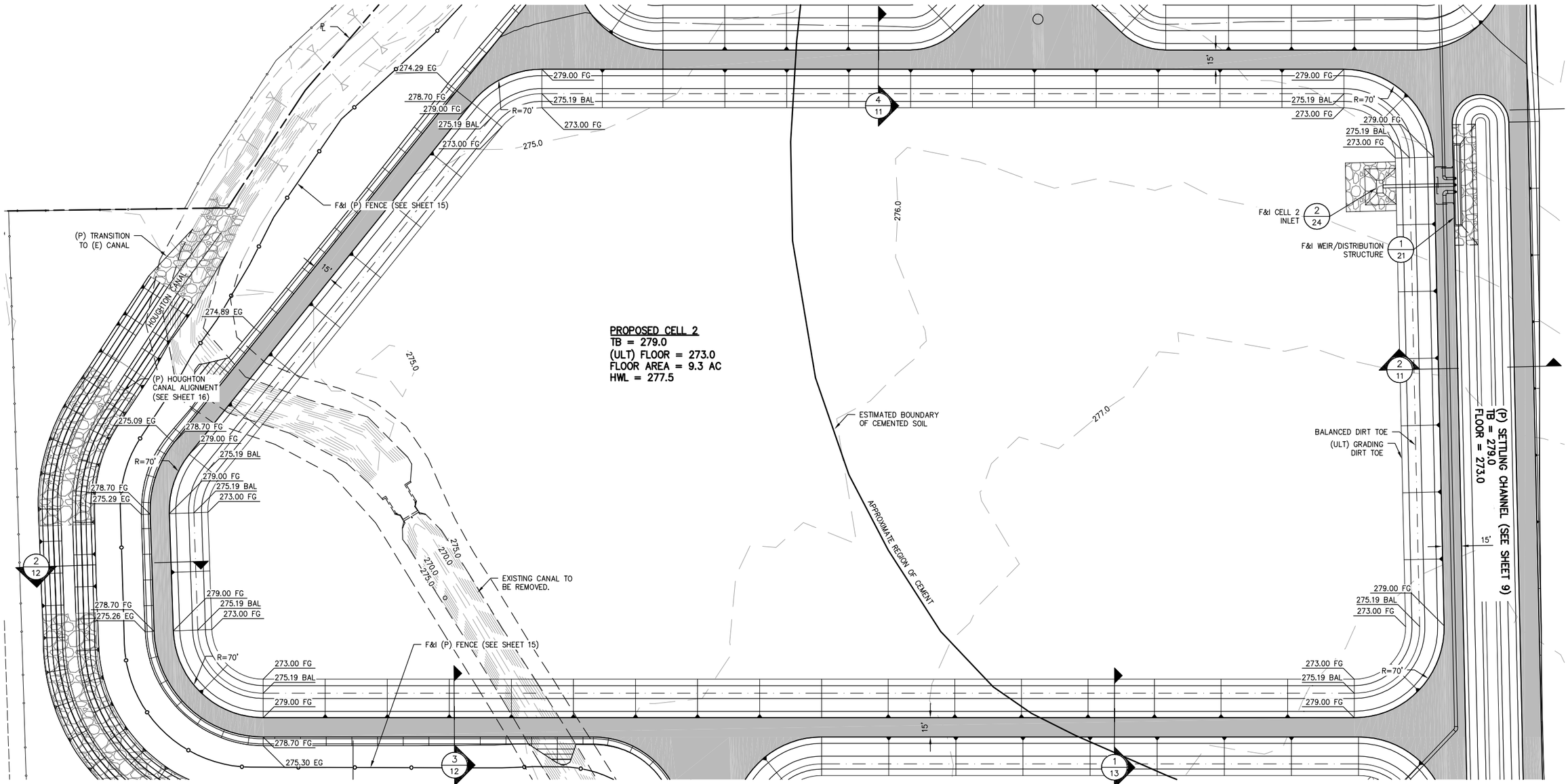

MATCHLINE

SEE SHEET 8

SCALE IN FEET
0 20 40 80

PRELIMINARY
NOT FOR CONSTRUCTION
3/13/14

No.	REVISION	BY	DATE

REGISTERED PROFESSIONAL ENGINEER RANDY S. HOPKINS No. 63538 Civil STATE OF CALIFORNIA

DATE SIGNED:

NIELSEN RECHARGE BASIN
APN 326-140-10, 11, 18 AND 23
CITY OF FRESNO
FRESNO COUNTY, CA

GRADING PLAN-CELL 2

FCE 24681
PROVOST & PRITCHARD
CONSULTING GROUP
An Employee Owned Company
286 W. CHESTNUT AVE.
CLOVIS, CALIFORNIA 93611-3166
559/326-1100 FAX 559/326-1090
www.ppeng.com

DESIGN ENGINEER: RANDY HOPKINS
LICENSE NO: 63538
DRAFTED BY: ----
CHECKED BY: ----
DATE: 3/13/14
JOB NO: 156112C1

0 1
ORIGINAL SCALE SHOWN IS IN INCHES. ADJUST SCALE FOR REDUCED OR ENLARGED PLANS.

SHEET 7 OF 34

3/13/2014 10:59 AM V:\Clients\Fresno City of-156112C1-Nielsen Recharge Basin\DWG\SHEETS\7 GRADING PLAN-CEL1 2.dwg -Gabriel Do Reynoso

MATCHLINE

SEE SHEET 7

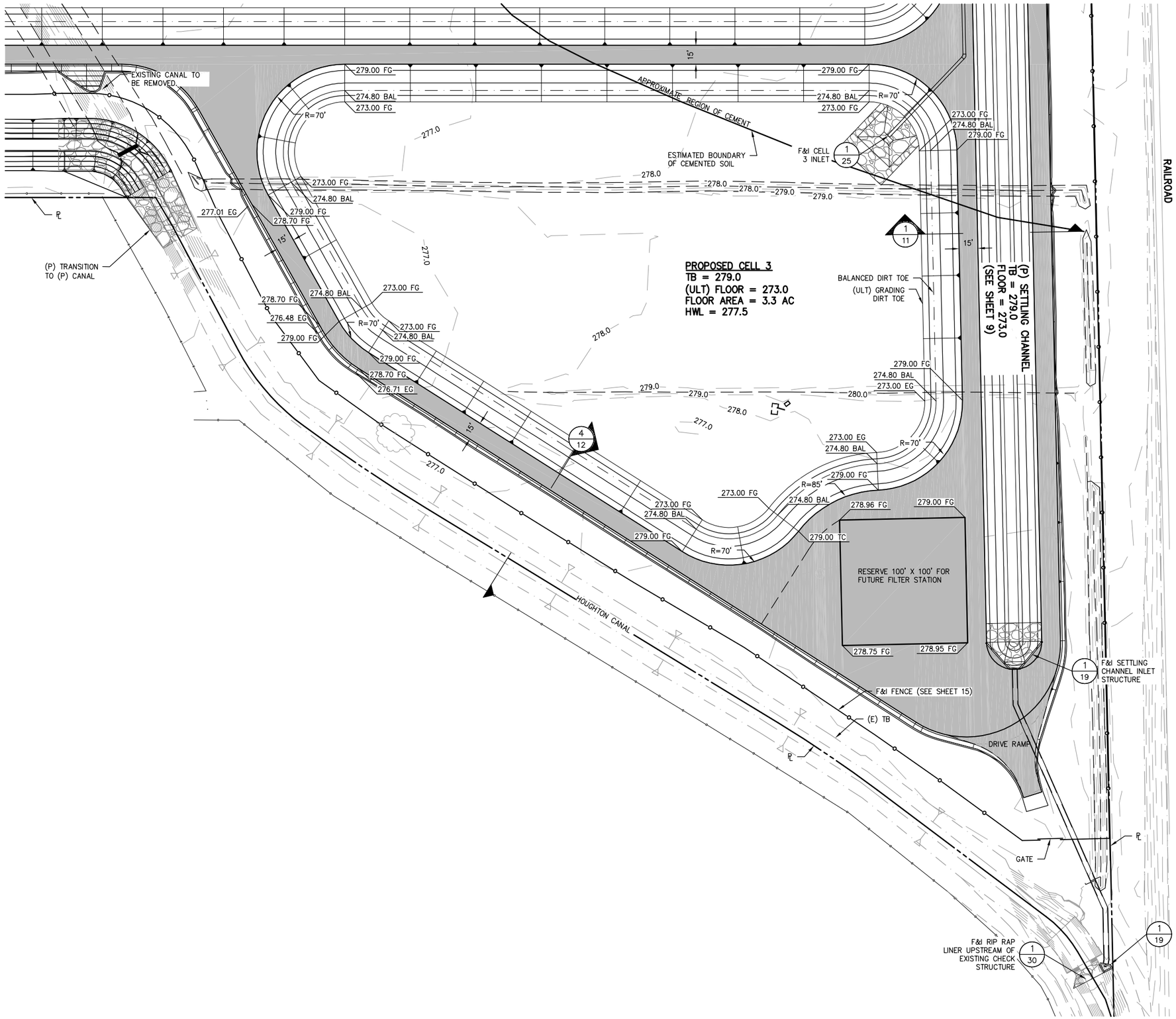

WARNING
POWER LINES OVERHEAD

Know what's **below.** **Call** before you dig.

COPYRIGHT 2014 by PROVOST & PRITCHARD ENGINEERING GROUP, INC. The information, ideas, and designs appearing on these plans are the property of Provost & Pritchard Engineering Group, Inc. These plans may not be used, in whole or in part, in any form or manner whatsoever, nor are they to be loaned, copied, or disclosed to others without the written permission and consent of Provost & Pritchard Engineering Group, Inc. In the event of unauthorized reuse of these plans by others for any purpose other than that for which they were prepared, the third party shall hold the firm of Provost & Pritchard Engineering Group, Inc. harmless, and shall indemnify the firm of Provost & Pritchard Engineering Group, Inc.'s legal fees associated with defending and enforcing these rights.

No.	REVISION	BY	DATE

PRELIMINARY
NOT FOR CONSTRUCTION
3/13/14

REGISTERED PROFESSIONAL ENGINEER RANDY S. HOPKINS No. 63538 Civil STATE OF CALIFORNIA

DATE SIGNED:

NIELSEN RECHARGE BASIN
APN 326-140-10, 11, 18 AND 23
CITY OF FRESNO
FRESNO COUNTY, CA

GRADING PLAN-CELL 3

FCS 2016
PROVOST & PRITCHARD
CONSULTING GROUP
An Employee Owned Company
750 N. ALUVIA AVENUE
CLOVIS, CALIFORNIA 93611-9166
559/326-1100 FAX 559/326-1090
www.ppeng.com

DESIGN ENGINEER: RANDY HOPKINS
LICENSE NO: 63538
DRAFTED BY: ----
CHECKED BY: ----
DATE: 3/13/14
JOB NO: 156112C1

0 ———— 1
ORIGINAL SCALE SHOWN IS IN INCHES. ADJUST SCALE FOR REDUCED OR ENLARGED PLANS.

SHEET 8 OF 34

3/13/2014 11:00 AM V:\Clients\Fresno City of-156\156112C1-Nielsen Recharge Basin\DWG\SHEET\8 GRADING PLAN-CEL1 3.dwg -Gabriel Da Ravenna

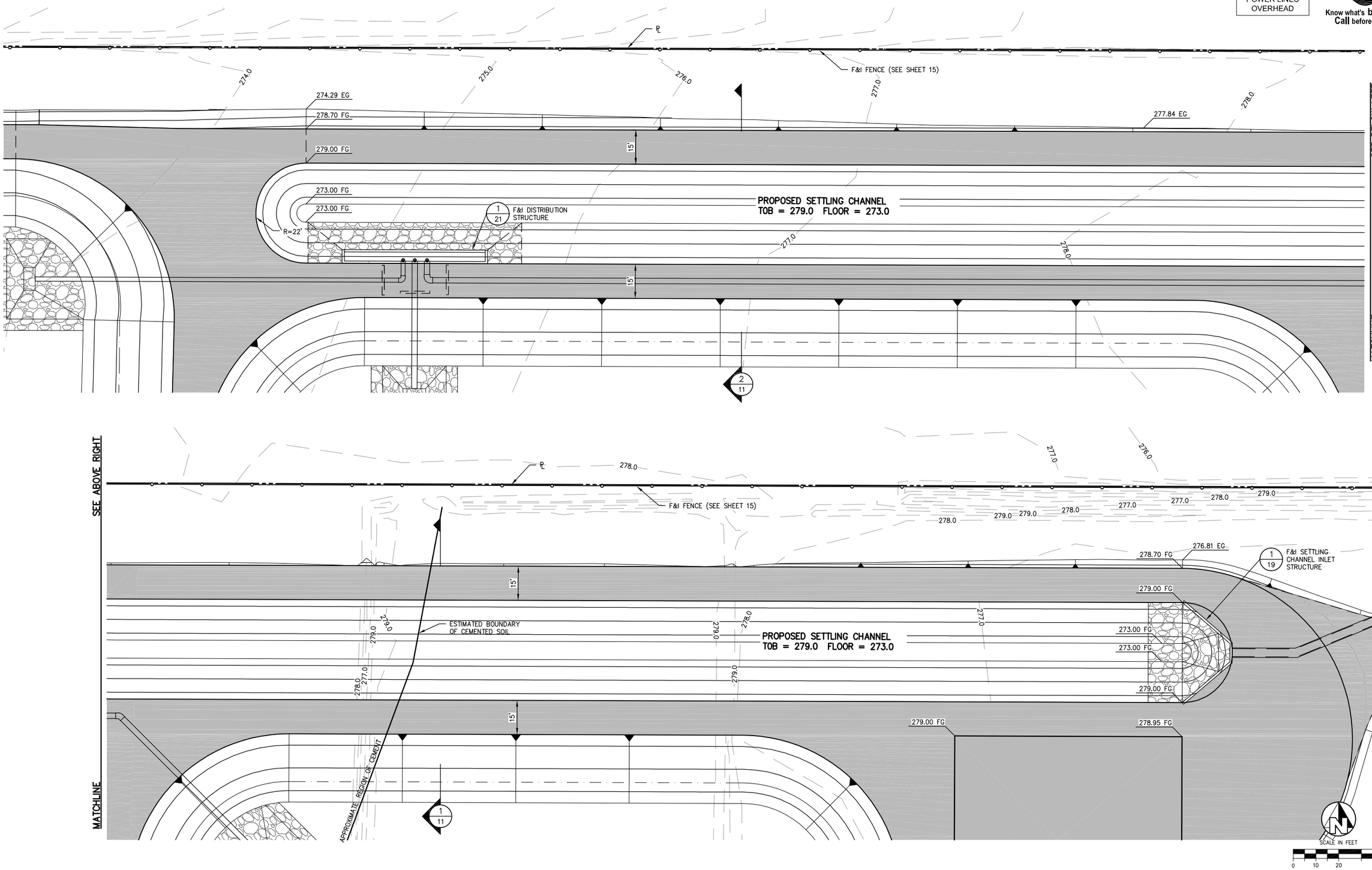

COPYRIGHT 2014 by PROVOST & PRITCHARD ENGINEERING GROUP, INC. (PROVOST & PRITCHARD) The firm of Provost & Pritchard Engineering Group, Inc. expressly reserves its common law copyright and other property rights in these plans. These plans are not to be changed or copied in any form or manner whatsoever, nor are they to be assigned to any third party without first obtaining the written permission and consent of Provost & Pritchard Engineering Group, Inc. In the event of unauthorized reuse of these plans by a third party, the third party shall hold the firm of Provost & Pritchard Engineering Group, Inc. harmless, and shall indemnify the firm of Provost & Pritchard Engineering Group, Inc.'s legal fees associated with defending and enforcing these rights.

No.	REVISION	BY	DATE

PRELIMINARY
NOT FOR CONSTRUCTION
3/13/14

REGISTERED PROFESSIONAL ENGINEER
RANDY S. HOPKINS
No. 63538
Civil
STATE OF CALIFORNIA

DATE SIGNED:

GRADING PLAN–SETTLING CHANNEL

NIELSEN RECHARGE BASIN
APN 326–140–10, 11, 18 AND 23
CITY OF FRESNO
FRESNO COUNTY, CA

EST. 1968
PROVOST & PRITCHARD
ENGINEERING GROUP
147 Emerald Bluff Court
2505 JUNIPER AVE.
CLOVIS, CALIFORNIA 93611-9166
559/326-1100 FAX 559/326-1090
www.ppeng.com

DESIGN ENGINEER: RANDY HOPKINS
LICENSE NO: 63538
DRAFTED BY: ---
CHECKED BY: ---
DATE: 3/13/14
JOB NO: 156112C1

0 1
ORIGINAL SCALE SHOWN IS IN INCHES. ADJUST SCALE FOR REDUCED OR ENLARGED PLANS.

SHEET 9 OF 34

3/13/2014 11:00 AM V:\Clients\Fresno City of-1561\156112C1-Nielsen Recharge Basin\DWG\SHEETS\9 GRADING PLAN-SETTLING CHANNEL.dwg -Gabriel Do Revenoso

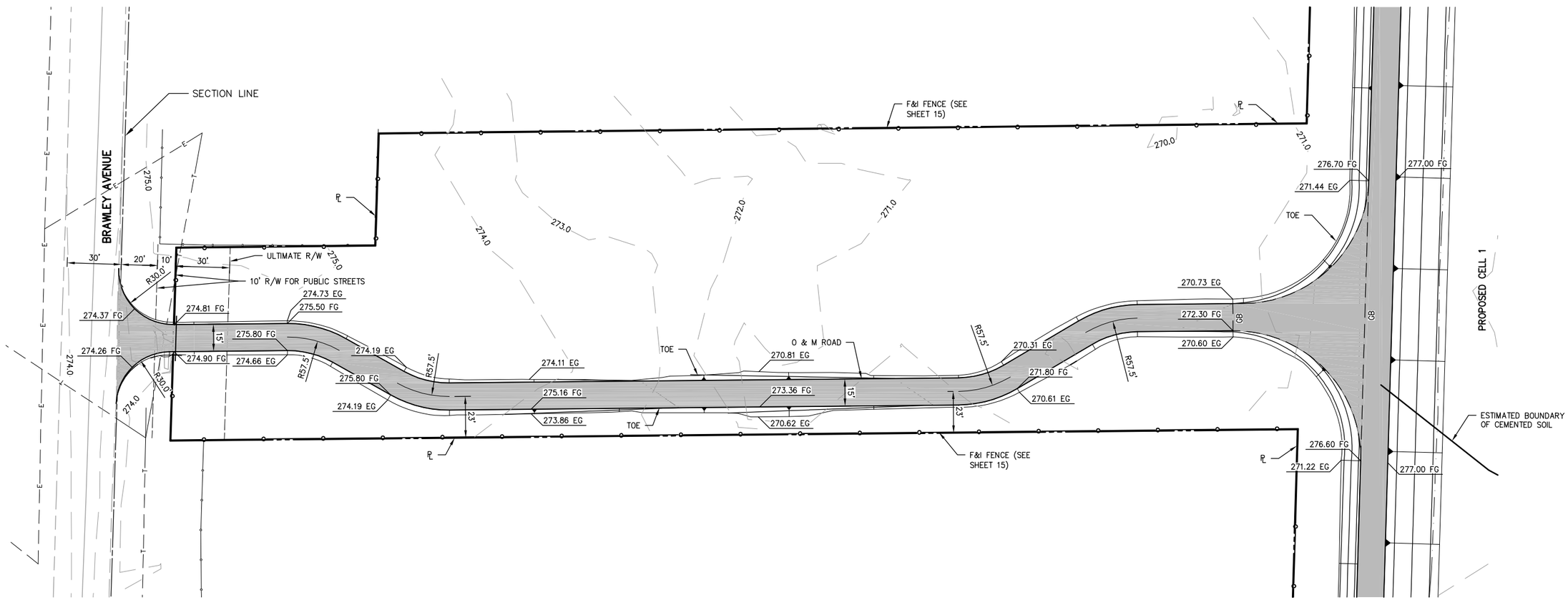

WARNING
POWER LINES OVERHEAD

811
Know what's **below.**
Call before you dig.

COPYRIGHT 2014 by PROVOST & PRITCHARD CONSULTING GROUP & Pritchard Engineering Group, Inc. expressly reserves its common law copyright and other property rights in these plans. These plans are not to be changed or copied in any form or manner whatsoever, nor are they to be assigned to any third party without first obtaining the written permission and consent of Provost & Pritchard Engineering Group, Inc. In the event of unauthorized reuse of these plans by a third party, the third party shall hold the firm of Provost & Pritchard Engineering Group, Inc. harmless, and shall have the right of Provost & Pritchard Engineering Group, Inc.'s legal fees associated with defending and enforcing these rights.

No.	REVISION	BY	DATE

PRELIMINARY
NOT FOR CONSTRUCTION
3/13/14

REGISTERED PROFESSIONAL ENGINEER
RANDY S. HOPKINS
No. 63538
Civil
STATE OF CALIFORNIA

DATE SIGNED: ____

NIELSEN RECHARGE BASIN
APN 326-140-10, 11, 18 AND 23
CITY OF FRESNO
FRESNO COUNTY, CA

GRADING PLAN–ACCESS ROAD

EST. 1968
PROVOST & PRITCHARD
CONSULTING GROUP
An Employee Owned Company
2205 ALLUVIAL AVENUE
CLOVIS, CALIFORNIA 93611-9166
559/326-1100 FAX 559/326-1090
www.ppeng.com

DESIGN ENGINEER: RANDY HOPKINS
LICENSE NO: 63538
DRAFTED BY: ----
CHECKED BY: ----
DATE: 3/13/14
JOB NO: 156112C1

0 1
ORIGINAL SCALE SHOWN IS IN INCHES. ADJUST SCALE FOR REDUCED OR ENLARGED PLANS.

SCALE IN FEET
0 15 30 60

SHEET 10 OF 34

3/13/2014 11:00 AM V:\Clients\Fresno City of-1561\156112C1-Nielsen Recharge Basin\DWG\SHEET\10 GRADING PLAN-ACCESS ROAD.dwg -Gabriel Ro Revision

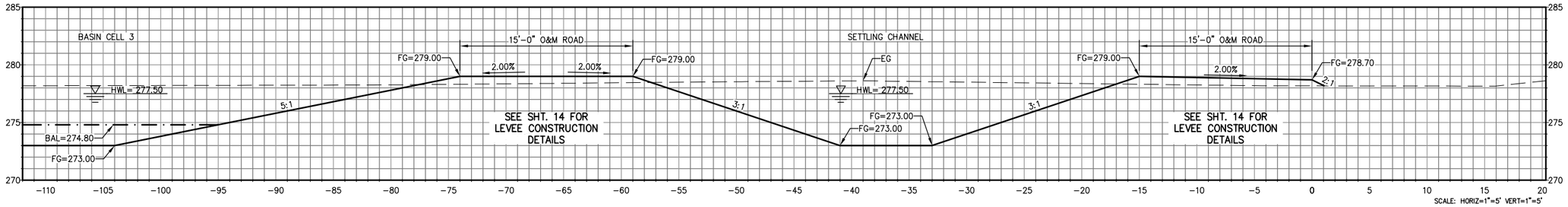

1
11

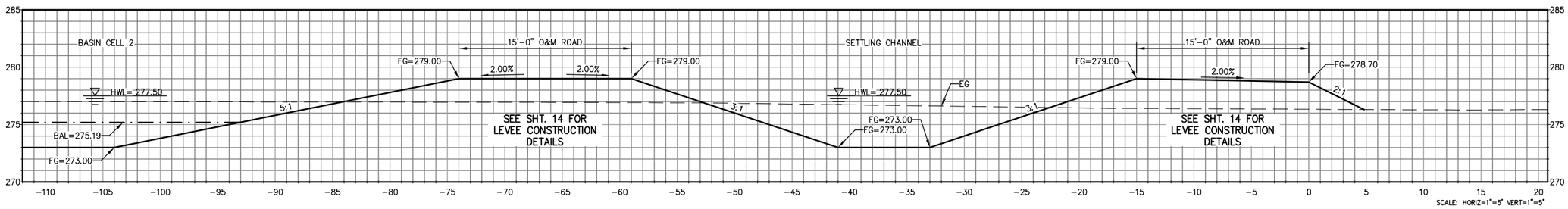

2
11

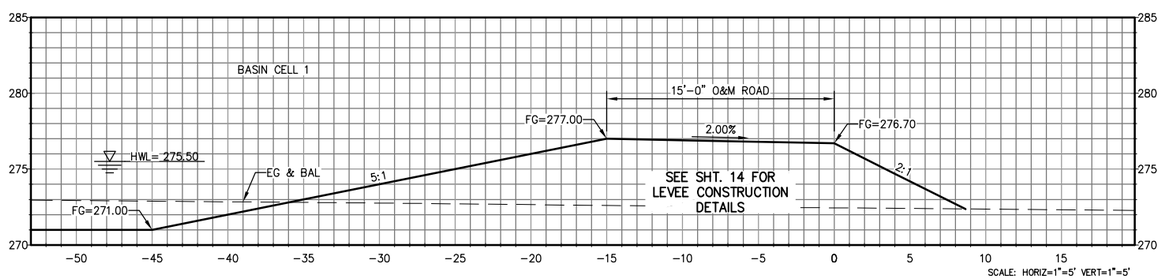

3
11

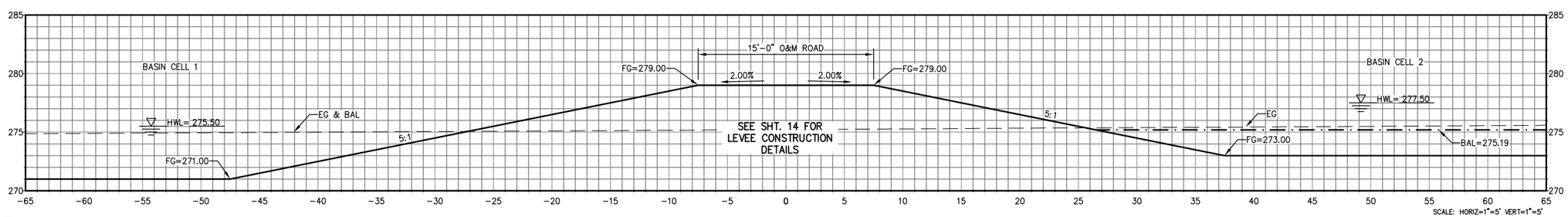

4
11

COPYRIGHT 2014 by PROVOST & PRITCHARD ENGINEERING GROUP, INC. (PROVOST & PRITCHARD). Provost & Pritchard Engineering Group, Inc. expressly reserves its common law copyright and other property rights in these plans. These plans are not to be reproduced, changed or copied in any form or manner whatsoever, nor are they to be assigned to any third party without first obtaining the written permission and consent of Provost & Pritchard Engineering Group, Inc. In the event of unauthorized reuse of these plans by a third party, the third party shall hold the firm of Provost & Pritchard Engineering Group, Inc. harmless, and shall reimburse Provost & Pritchard Engineering Group, Inc.'s legal fees associated with defending and enforcing these rights.

PRELIMINARY
NOT FOR CONSTRUCTION
3/13/14

No.	REVISION	BY	DATE

REGISTERED PROFESSIONAL ENGINEER
RANDY S. HOPKINS
No. 63538
Civil
STATE OF CALIFORNIA

DATE SIGNED:

NIELSEN RECHARGE BASIN
APN 326-140-10, 11, 18 AND 23
CITY OF FRESNO
FRESNO COUNTY, CA

LEVEE SECTIONS 1

PROVOST & PRITCHARD
FCS GROUP
An Employee Owned Company
7601 N. WEST AVE.
CLOVIS, CALIFORNIA 93611-9166
559/326-1100 FAX 559/326-1090
www.ppeng.com

DESIGN ENGINEER: RANDY HOPKINS
LICENSE NO: 63538
DRAFTED BY: ----
CHECKED BY: ----
DATE: 3/13/14
JOB NO: 156112C1

0 1
ORIGINAL SCALE SHOWN IS IN INCHES. ADJUST SCALE FOR REDUCED OR ENLARGED PLANS.

SHEET 11 OF 34

3/13/2014 11:00 AM V:\Clients\Fresno City of-1561\156112C1-Nielsen Recharge Basin\DWG\SHEETS\11 LEVEE SECTIONS 1.dwg -Gabriel Do Revenoso

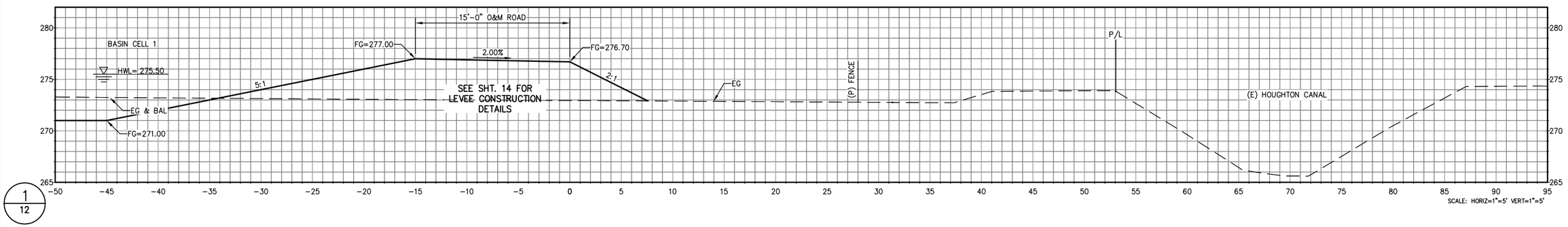

1/12

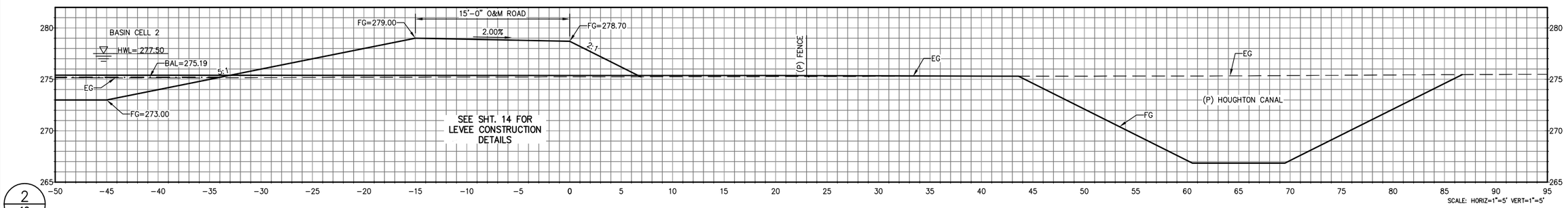

2/12

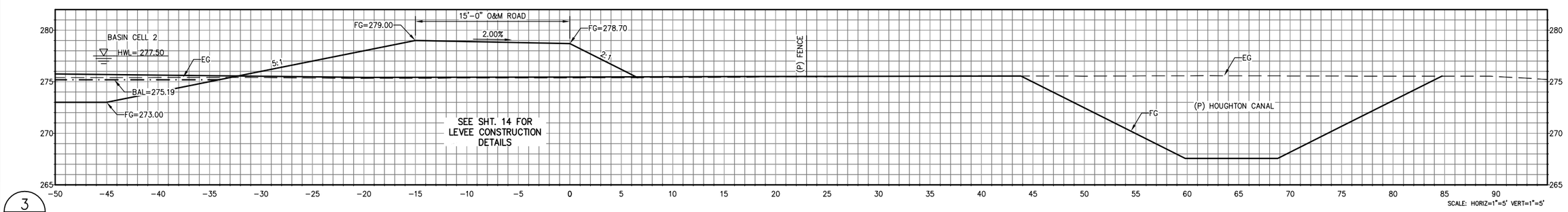

3/12

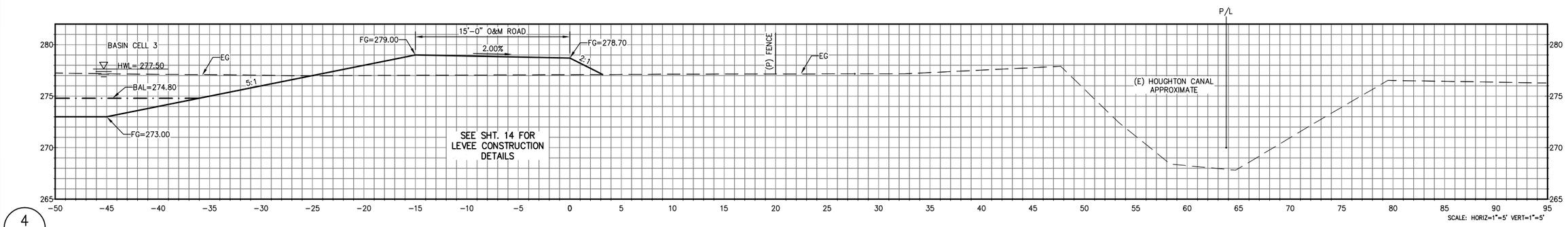

4/12

COPYRIGHT 2014 by PROVOST & PRITCHARD CONSULTING GROUP, dba PROVOST & PRITCHARD, Inc. expressly reserves its common law copyright and other property rights in these plans. These plans are not to be reproduced, changed or copied in any form or manner whatsoever, nor are they to be assigned to any third party, without first obtaining the written permission and consent of Provost & Pritchard Engineering Group, Inc. In the event of unauthorized reuse of these plans by a third party, the third party shall hold the firm of Provost & Pritchard Engineering Group, Inc. harmless, and shall indemnify the firm of Provost & Pritchard Engineering Group, Inc.'s legal fees associated with defending and enforcing these rights.

No.	REVISION	BY	DATE

PRELIMINARY
NOT FOR CONSTRUCTION
3/13/14

REGISTERED PROFESSIONAL ENGINEER
RANDY S. HOPKINS
No. 63538
Civil
STATE OF CALIFORNIA

DATE SIGNED: _____

NIELSEN RECHARGE BASIN
APN 326-140-10, 11, 18 AND 23
CITY OF FRESNO
FRESNO COUNTY, CA

LEVEE SECTIONS 2

PROVOST & PRITCHARD
FST 21631
CONSULTING GROUP
An Employee Owned Company
2020 CLOVIS AVENUE
CLOVIS, CALIFORNIA 93611-9166
559/326-1100 FAX 559/326-1090
www.ppeng.com

DESIGN ENGINEER: RANDY HOPKINS
LICENSE NO: 63538
DRAFTED BY: ----
CHECKED BY: ----
DATE: 3/13/14
JOB NO: 156112C1
0 1
ORIGINAL SCALE SHOWN IS IN INCHES. ADJUST SCALE FOR REDUCED OR ENLARGED PLANS.
SHEET 12 OF 34

3/13/2014 11:00 AM V:\Clients\Fresno City of-1561\156112C1-Nielsen Recharge Basin\DWG\SHEET\12 LEVEE SECTIONS 2.dwg -Gabriel Do, Revoscoo

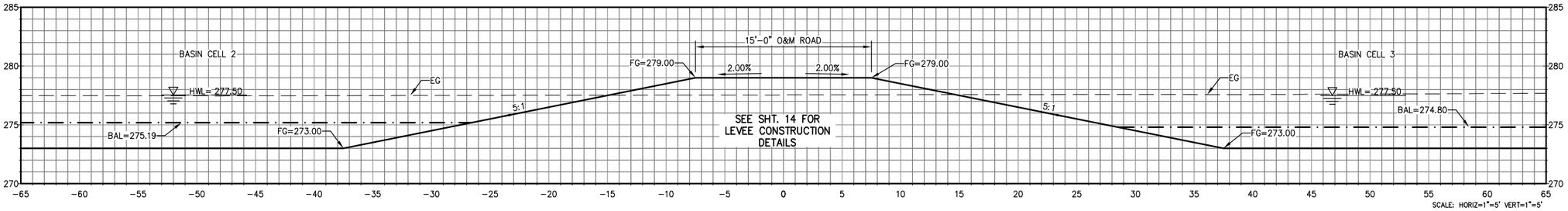

1
13

COPYRIGHT 2014 by PROVOST & PRITCHARD ENGINEERING GROUP, INC. (Provost & Pritchard Engineering Group, Inc.) expressly reserves its common law copyright and other property rights in these plans. These plans are not to be changed or copied in any form or manner whatsoever, nor are they to be assigned to any third party, without first obtaining the written permission and consent of Provost & Pritchard Engineering Group, Inc. In the event of unauthorized reuse of these plans by a third party, the third party shall hold the firm of Provost & Pritchard Engineering Group, Inc. harmless, and shall defend and indemnify Provost & Pritchard Engineering Group, Inc.'s legal fees associated with defending and enforcing these rights.

PRELIMINARY
NOT FOR CONSTRUCTION
3/13/14

No.	REVISION	BY	DATE

REGISTERED PROFESSIONAL ENGINEER
RANDY S. HOPKINS
No. 63538
Civil
STATE OF CALIFORNIA

DATE SIGNED: _____

NIELSEN RECHARGE BASIN
APN 326-140-10, 11, 18 AND 23
CITY OF FRESNO
FRESNO COUNTY, CA

LEVEE SECTIONS 3

EST. 1961
PROVOST & PRITCHARD
CONSULTING GROUP
An Employee Owned Company
286 W. CUTLER AVENUE
CLOVIS, CALIFORNIA 93611-9166
559/326-1100 FAX 559/326-1090
www.ppeng.com

DESIGN ENGINEER: RANDY HOPKINS
LICENSE NO: 63538
DRAFTED BY: ----
CHECKED BY: ----
DATE: 3/13/14
JOB NO: 156112C1
0 1
ORIGINAL SCALE SHOWN IS IN INCHES. ADJUST SCALE FOR REDUCED OR ENLARGED PLANS.
SHEET 13 OF 34

3/13/2014 11:01 AM V:\Clients\Fresno City of-156112C1-Nielsen Recharge Basin\DWG\SHEET\13 LEVEE SECTIONS 3.dwg -Gabriel Da Revoroso

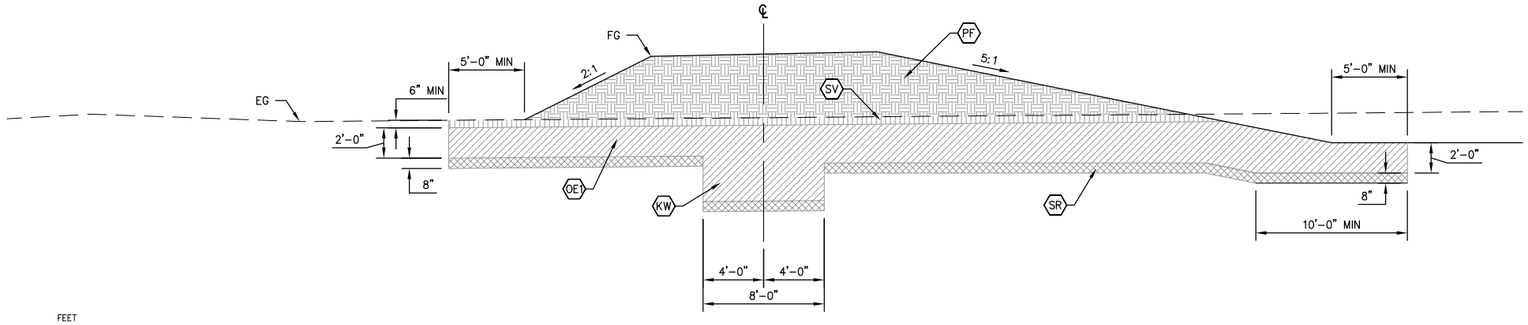

1/14

OUTSIDE LEVEE

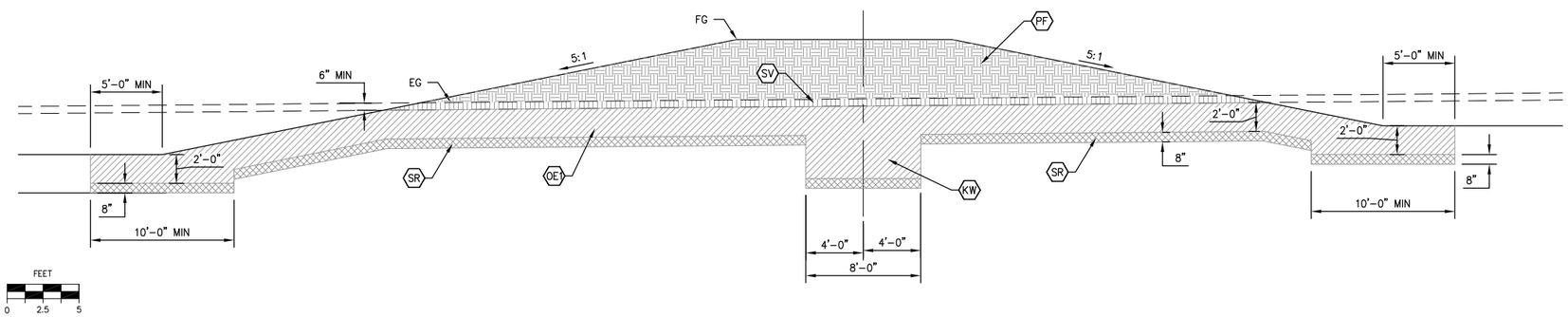

2/14

INTERIOR LEVEE

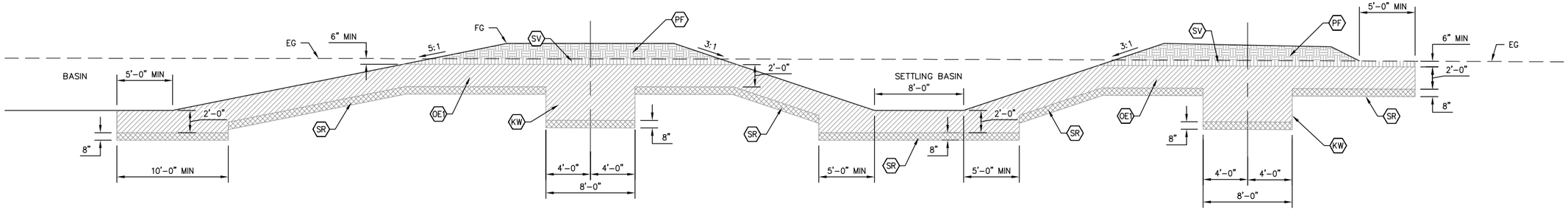

3/14

SETTLING BASIN LEVEE

CONSTRUCTION LEGEND

- KW — OVEREXCAVATE 8' WIDE TRENCH ALONG CENTERLINE OF POND EMBANKMENTS. TRENCH MUST BE A MINIMUM DEPTH OF 5' BELOW THE STRIPPED GROUND SURFACE OR 6 INCHES INTO SANDY MATERIALS, WHICHEVER IS DEEPER. RECOMPACT TO MIN 95% OF MAXIMUM DRY DENSITY.
- OE — OVER-EXCAVATE A MINIMUM OF 24" BELOW CLEAN SOIL SURFACE AND RECOMPACT TO MIN 95% OF MAXIMUM DRY DENSITY.
- PF — PLACE ENGINEERED FILL IN LOOSE LIFTS NO THICKER THAN 8" AND COMPACT TO MIN 95% OF MAXIMUM DRY DENSITY. SLOPES MUST BE OVERBUILT BY A MIN 6" AND TRIMMED TO DESIGN GRADE.
- SR — SCARIFY 8" & RECOMPACT TO MIN 95% OF MAXIMUM DRY DENSITY.
- SV — STRIP NEAR SURFACE SOILS CONTAINING VEGETATION, ROOTS, OR OTHER OBJECTIONABLE ORGANIC MATTER TO A MIN DEPTH OF 6" TO EXPOSE A CLEAN SOIL SURFACE WITHIN THE AREA OF LEVEE CONSTRUCTION.

NOTES:

1. SOILS USED TO BACKFILL OVEREXCAVATED AREAS AND CONSTRUCT LEVEES MUST MEET CRITERIA SPECIFIED IN GEOTECHNICAL REPORT AND PROJECT SPECIFICATIONS.

COPYRIGHT 2014 by PROVOST & PRITCHARD CONSULTING GROUP & Pritchard Engineering Co. Inc. expressly reserves its common law copyright and other property rights in these plans. These plans are not to be reproduced, changed or copied in any form or manner whatsoever, nor are they to be assigned to any third party without first obtaining the written permission and consent of Provost & Pritchard Engineering Group, Inc. In the event of unauthorized reuse of these plans by a third party, the third party shall hold the firm of Provost & Pritchard Engineering Group, Inc. harmless, and shall indemnify the firm of Provost & Pritchard Engineering Group, Inc.'s legal fees associated with defending and enforcing these rights.

No.	REVISION	BY	DATE

PRELIMINARY
NOT FOR CONSTRUCTION
3/13/14

REGISTERED PROFESSIONAL ENGINEER — RANDY S. HOPKINS — No. 63538 — Civil — STATE OF CALIFORNIA

DATE SIGNED: _____

NIELSEN RECHARGE BASIN
APN 326-140-10, 11, 18 AND 23
CITY OF FRESNO
FRESNO COUNTY, CA

TYPICAL LEVEE SECTIONS

PROVOST & PRITCHARD
CONSULTING GROUP
An Employee Owned Company
AVIVA A. ARCHER
CLOVIS, CALIFORNIA 93611-9166
559/326-1100 FAX 559/326-1090
www.ppeng.com

DESIGN ENGINEER: RANDY HOPKINS
LICENSE NO: 63538
DRAFTED BY: ----
CHECKED BY: ----
DATE: 3/13/14
JOB NO: 156112C1

0 1
ORIGINAL SCALE SHOWN IS IN INCHES. ADJUST SCALE FOR REDUCED OR ENLARGED PLANS.

SHEET 14 OF 34

3/13/2014 11:01 AM V:\Clients\Fresno City of-1561\156112C1-Nielsen Recharge Basin\DWG\SHEET\14 TYPICAL LEVEE SECTIONS.dwg -Gabriel Do Revoso

WARNING
POWER LINES OVERHEAD

811
Know what's **below.**
Call before you dig.

RAILROAD

BRAWLEY AVENUE

NIELSEN AVENUE

DITCH

(E) FENCE

(E) TB

(E) GATE

112' 522' 1651' 34' 20' 68' 296' 63' 106' 25' 303' 35' 18' 19' 16' 17'

CONSTRUCTION NOTES

F1	CONSTRUCT CHAIN LINK FENCE	2/26
F2	CONSTRUCT GATE	1/26
F3	CONSTRUCT CHAIN LINK FENCE CORNER	
FE	PROTECT EXISTING FENCE IN PLACE	

SCALE IN FEET
0 40 80 160

COPYRIGHT 2014 by PROVOST & PRITCHARD
ENGINEERING GROUP, INC. (www.provpritch.com)
The firm of Provost & Pritchard Engineering Group, Inc. expressly reserves its common law copyright and other property rights in these plans. These plans are not to be changed or copied in any form or manner whatsoever, nor are they to be assigned to any third party, without first obtaining the written permission and consent of Provost & Pritchard Engineering Group, Inc. In the event of unauthorized reuse of these plans by a third party, the third party shall hold the firm of Provost & Pritchard Engineering Group, Inc. harmless, and shall indemnify the firm of Provost & Pritchard Engineering Group, Inc.'s legal fees associated with defending and enforcing these rights.

No.	REVISION	BY	DATE

PRELIMINARY
NOT FOR CONSTRUCTION
3/13/14

REGISTERED PROFESSIONAL ENGINEER
RANDY S. HOPKINS
No. 63538
Civil
STATE OF CALIFORNIA

DATE SIGNED:

NIELSEN RECHARGE BASIN
APN 326-140-10, 11, 18 AND 23
CITY OF FRESNO
FRESNO COUNTY, CA

FENCE SITE PLAN

FEIN 77-0196118
PROVOST & PRITCHARD
CONSULTING ENGINEERS
An Employee Owned Company
286 W. CLOVIS AVENUE
CLOVIS, CALIFORNIA 93611-9166
559/326-1100 FAX 559/326-1090
www.ppeng.com

DESIGN ENGINEER: RANDY HOPKINS
LICENSE NO: 63538
DRAFTED BY: ----
CHECKED BY: ----
DATE: 3/13/14
JOB NO: 156112C1

0 ——— 1
ORIGINAL SCALE SHOWN IS IN INCHES. ADJUST SCALE FOR REDUCED OR ENLARGED PLANS.

3/13/2014 11:01 AM V:\Clients\Fresno City of-1561\156112C1-Nielsen Recharge Basin\DWG\SHEET\15 FENCE SITE PLAN.dwg -Gabriel Da Revenso

NOTE

1. SEE SHEET 17 FOR PROPOSED CANAL SECTIONS

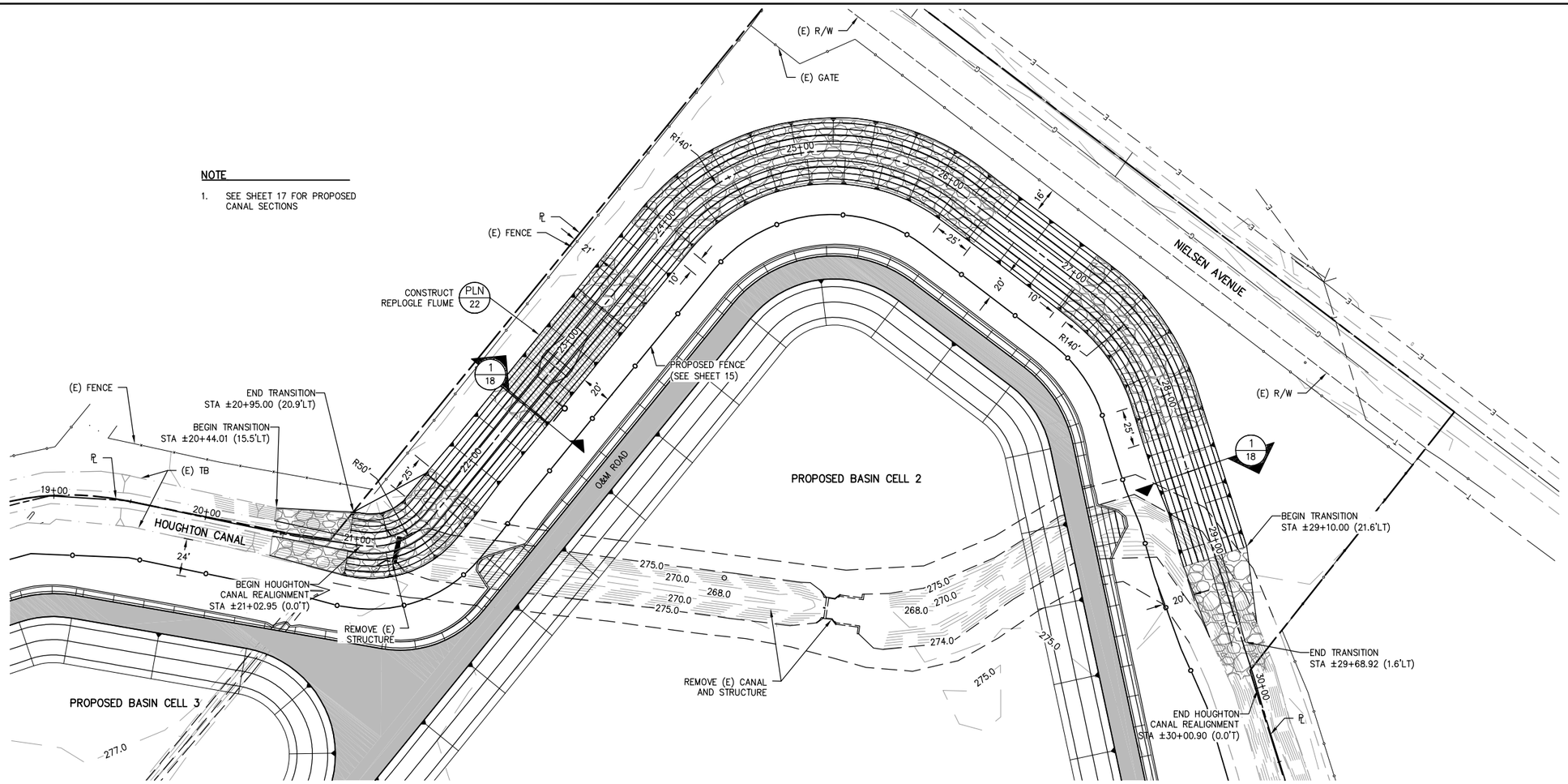

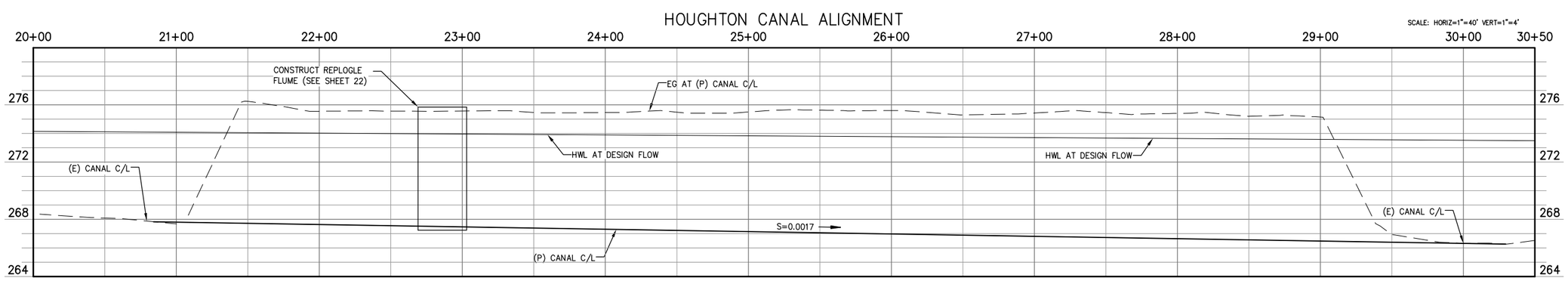

WARNING
POWER LINES OVERHEAD

811 Know what's below. Call before you dig.

COPYRIGHT 2014 by PROVOST & PRITCHARD CONSULTING GROUP, dba PROVOST & PRITCHARD ENGINEERING GROUP, Inc. expressly reserves its common law copyright and other property rights in these plans. These plans are not to be changed or copied in any form or manner whatsoever, nor are they to be assigned to any third party, without first obtaining the written permission and consent of Provost & Pritchard Engineering Group, Inc. In the event of unauthorized reuse of these plans by a third party, the third party shall hold the firm of Provost & Pritchard Engineering Group, Inc. harmless, and shall defend and indemnify Provost & Pritchard Engineering Group, Inc.'s legal fees associated with defending and enforcing these rights.

No.	REVISION	BY	DATE

PRELIMINARY
NOT FOR CONSTRUCTION
3/13/14

REGISTERED PROFESSIONAL ENGINEER — RANDY S. HOPKINS — No. 63538 — Civil — STATE OF CALIFORNIA

DATE SIGNED: ____

NIELSEN RECHARGE BASIN
APN 326-140-10, 11, 18 AND 23
CITY OF FRESNO
FRESNO COUNTY, CA

CANAL SITE PLAN

EST. 1961
PROVOST & PRITCHARD
CONSULTING GROUP
An Employee Owned Company
7095 N. ASHLEY AVENUE
CLOVIS, CALIFORNIA 93611-9166
559/326-1100 FAX 559/326-1090
www.ppeng.com

DESIGN ENGINEER: RANDY HOPKINS
LICENSE NO: 63538
DRAFTED BY: ----
CHECKED BY: ----
DATE: 3/13/14
JOB NO: 156112C1

0 1
ORIGINAL SCALE SHOWN IS IN INCHES. ADJUST SCALE FOR REDUCED OR ENLARGED PLANS.

3/13/2014 11:01 AM V:\Clients\Fresno City of-1561\156112C1-Nielsen Recharge Basin\DWG\SHEET\16 CANAL SITE PLAN.dwg -Gabriel Do Revoroso

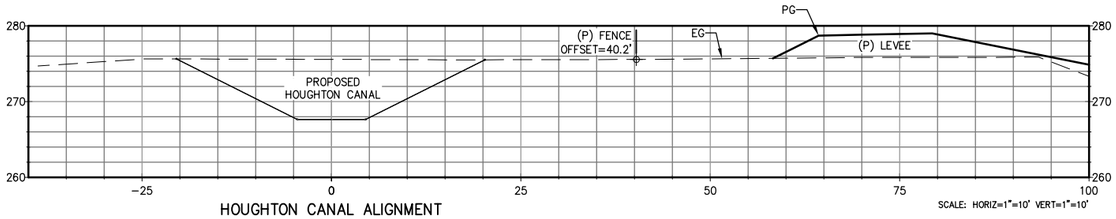

HOUGHTON CANAL ALIGNMENT
22+00

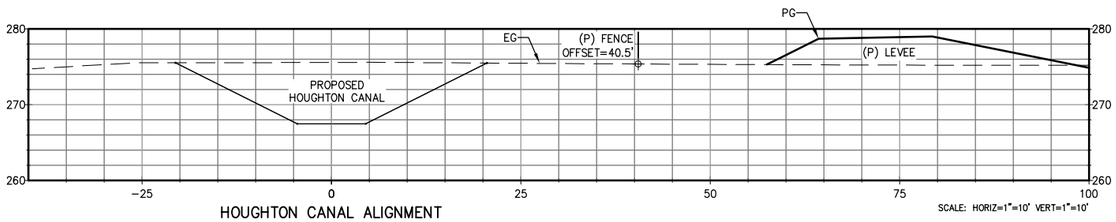

HOUGHTON CANAL ALIGNMENT
23+00

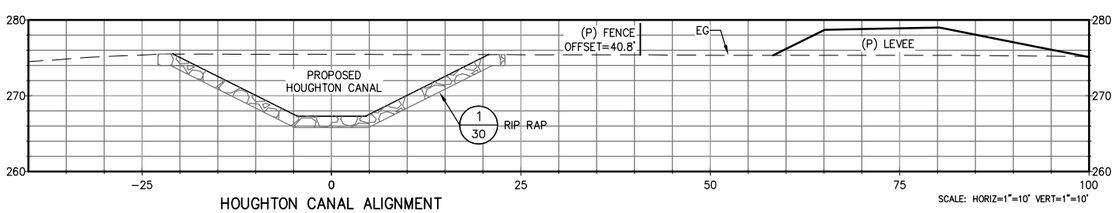

HOUGHTON CANAL ALIGNMENT
24+00

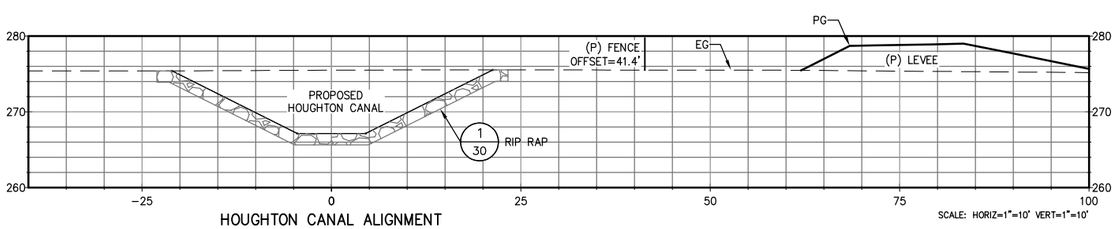

HOUGHTON CANAL ALIGNMENT
25+00

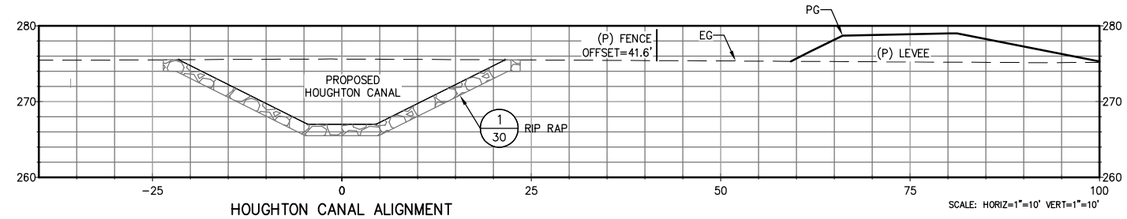

HOUGHTON CANAL ALIGNMENT
26+00

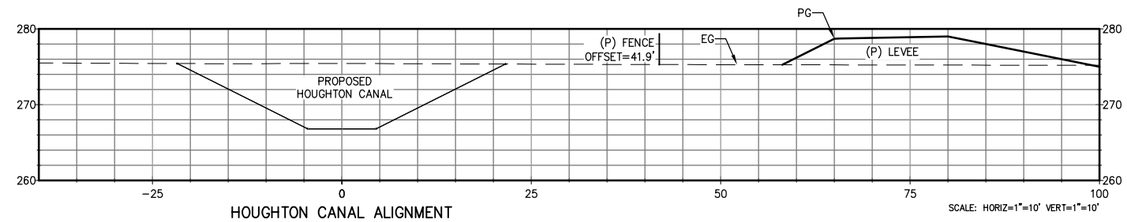

HOUGHTON CANAL ALIGNMENT
27+00

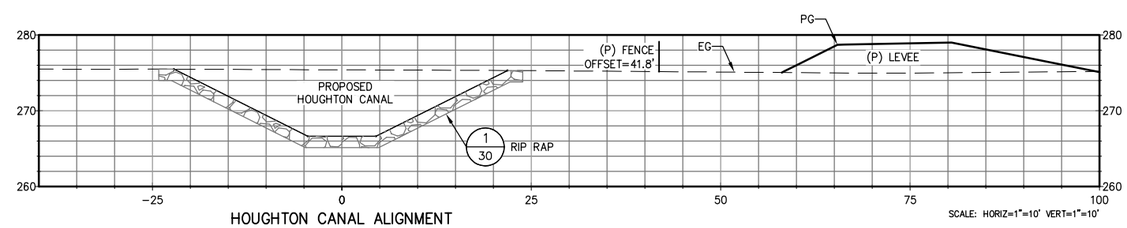

HOUGHTON CANAL ALIGNMENT
28+00

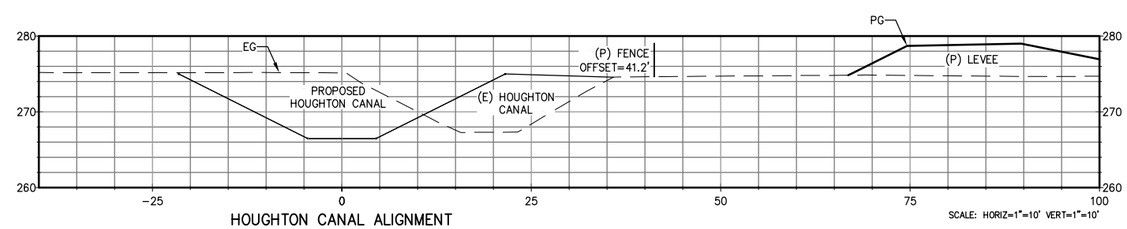

HOUGHTON CANAL ALIGNMENT
29+00

COPYRIGHT 2014 by PROVOST & PRITCHARD ENGINEERING GROUP, INC. (PROVOST & PRITCHARD GROUP, Inc.) The firm of Provost & Pritchard Engineering Group, Inc. expressly reserves its common law copyright and other property rights in these plans. These plans are not to be reproduced, changed or copied in any form or manner whatsoever, nor are they to be assigned to any third party without first obtaining the written permission and consent of Provost & Pritchard Engineering Group, Inc. In the event of unauthorized reuse of these plans by a third party, the third party shall hold the firm of Provost & Pritchard Engineering Group, Inc. harmless, and shall indemnify the firm of Provost & Pritchard Engineering Group, Inc.'s legal fees associated with defending and enforcing these rights.

PRELIMINARY
NOT FOR CONSTRUCTION
3/13/14

No.	REVISION	BY	DATE

REGISTERED PROFESSIONAL ENGINEER
RANDY S. HOPKINS
No. 63538
Civil
STATE OF CALIFORNIA

DATE SIGNED:

NIELSEN RECHARGE BASIN
APN 326-140-10, 11, 18 AND 23
CITY OF FRESNO
FRESNO COUNTY, CA

CANAL CROSS SECTIONS

FST 21661
PROVOST & PRITCHARD
CONSULTING GROUP
An Employee Owned Company
286 W. CUTLER AVENUE
CLOVIS, CALIFORNIA 93611-9166
559/326-1100 FAX 559/326-1090
www.ppeng.com

DESIGN ENGINEER: RANDY HOPKINS
LICENSE NO: 63538
DRAFTED BY: ----
CHECKED BY: ----
DATE: 3/13/14
JOB NO: 156112C1

0 1
ORIGINAL SCALE SHOWN IS IN INCHES. ADJUST SCALE FOR REDUCED OR ENLARGED PLANS.

SHEET 17 OF 34

3/13/2014 11:01 AM V:\Clients\Fresno City of-156\156112C1-Nielsen Recharge Basin\DWG\SHEET\17 CANAL CROSS SECTIONS.dwg -Gabriel Do Revision

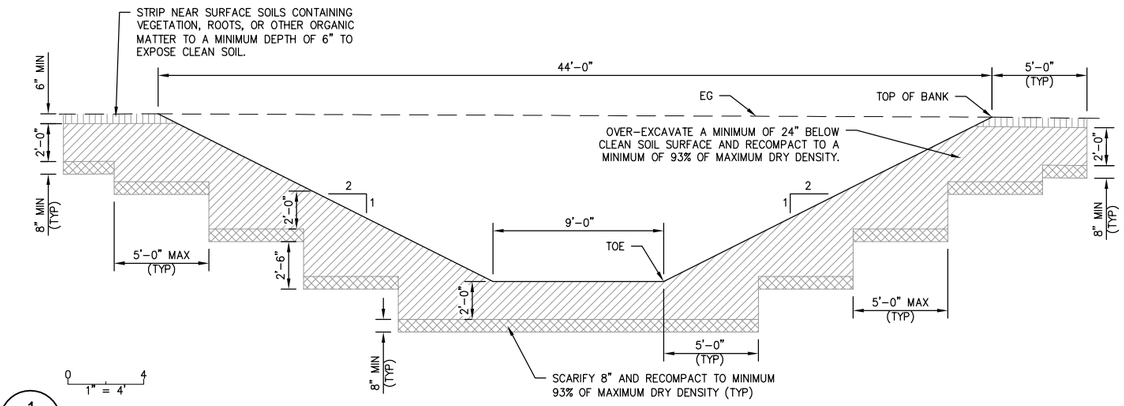

1
18

HOUGHTON CANAL

COPYRIGHT 2014 by PROVOST & PRITCHARD ENGINEERING GROUP, INC. (www.provostpritchard.com) The firm of Provost & Pritchard Engineering Group, Inc. expressly reserves its common law copyright and other property rights in these plans. These plans are not to be changed or copied in any form or manner whatsoever, nor are they to be assigned to any third party, without first obtaining the written permission and consent of Provost & Pritchard Engineering Group, Inc. In the event of unauthorized reuse of these plans by a third party, the third party shall hold the firm of Provost & Pritchard Engineering Group, Inc. harmless, and shall defend and indemnify the firm of Provost & Pritchard Engineering Group, Inc.'s legal fees associated with defending and enforcing these rights.

PRELIMINARY
NOT FOR CONSTRUCTION
3/13/14

No.	REVISION	BY	DATE

REGISTERED PROFESSIONAL ENGINEER
RANDY S. HOPKINS
No. 63538
Civil
STATE OF CALIFORNIA

DATE SIGNED: _____

NIELSEN RECHARGE BASIN
APN 326-140-10, 11, 18 AND 23
CITY OF FRESNO
FRESNO COUNTY, CA

CANAL DETAILS

EST. 1961
PROVOST & PRITCHARD
CONSULTING GROUP
An Employee Owned Company
286 W. CLINTON AVENUE
CLOVIS, CALIFORNIA 93611-9166
559/326-1100 FAX 559/326-1090
www.ppeng.com

DESIGN ENGINEER: RANDY HOPKINS
LICENSE NO: 63538
DRAFTED BY: ----
CHECKED BY: ----
DATE: 3/13/14
JOB NO: 156112C1
0 1
ORIGINAL SCALE SHOWN IS IN INCHES. ADJUST SCALE FOR REDUCED OR ENLARGED PLANS.
SHEET 18 OF 34

3/13/2014 11:07 AM V:\Clients\Fresno City of-1561\156112C1-Nielsen Recharge Basin\DWG\SHEET\18 CANAL DETAILS.dwg -Gabriel Do Rosario

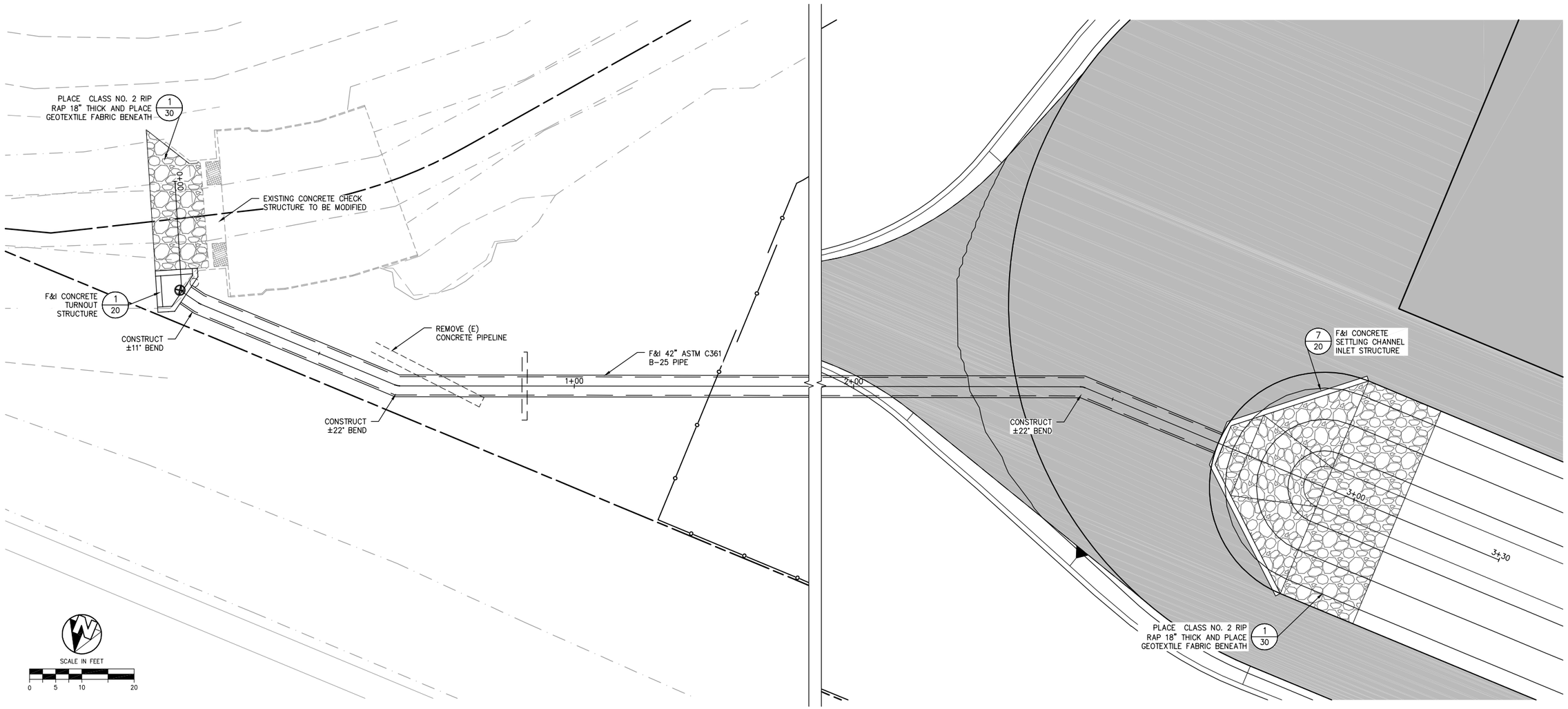

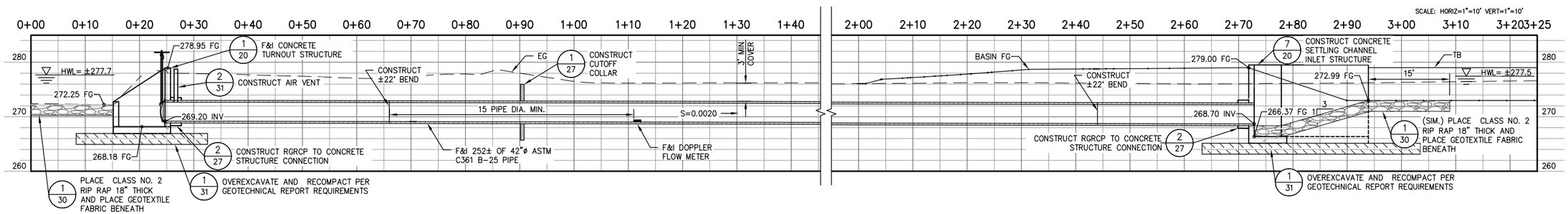

1/19

COPYRIGHT 2014 by PROVOST & PRITCHARD CONSULTING GROUP. The firm of Provost & Pritchard Consulting Group, Inc. expressly reserves its common law copyright and other property rights in these plans. These plans are not to be changed or copied in any form or manner whatsoever, nor are they to be assigned to any third party, without first obtaining the written permission and consent of Provost & Pritchard Engineering Group, Inc. In the event of unauthorized reuse of these plans by a third party, the third party shall hold the firm of Provost & Pritchard Engineering Group, Inc. harmless, and shall defend the firm of Provost & Pritchard Engineering Group, Inc.'s legal fees associated with defending and enforcing these rights.

No.	REVISION	BY	DATE

PRELIMINARY
NOT FOR CONSTRUCTION
3/13/14

REGISTERED PROFESSIONAL ENGINEER
RANDY S. HOPKINS
No. 63538
Civil
STATE OF CALIFORNIA

DATE SIGNED: ____

NIELSEN RECHARGE BASIN
APN 326-140-10, 11, 18 AND 23
CITY OF FRESNO
FRESNO COUNTY, CA

PROJECT TURNOUT

FCI 24631
PROVOST & PRITCHARD
CONSULTING GROUP
An Employee Owned Company
286 W. CUTLER AVENUE
CLOVIS, CALIFORNIA 93611-9166
559/326-1100 FAX 559/326-1090
www.ppcng.com

DESIGN ENGINEER: RANDY HOPKINS
LICENSE NO: 63538
DRAFTED BY: ----
CHECKED BY: ----
DATE: 3/13/14
JOB NO: 156112C1

0 1
ORIGINAL SCALE SHOWN IS IN INCHES. ADJUST SCALE FOR REDUCED OR ENLARGED PLANS.

SHEET 19 OF 34

3/13/2014 11:07 AM V:\Clients\Fresno City of-1561\156112C1-Nielsen Recharge Basin\DWG\SHEET\19 PROJECT TURNOUT.dwg -Gabriel Da Revoredo

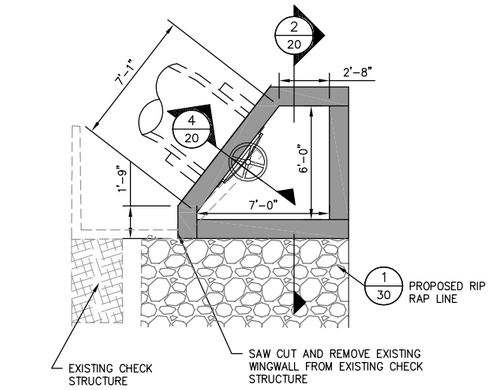

1/20 INLET STRUCTURE

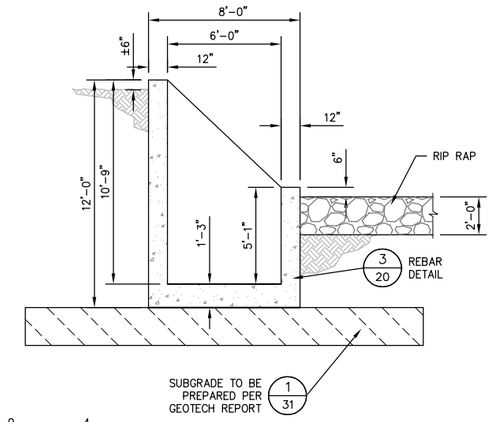

2/20 INLET STRUCTURE SECTION

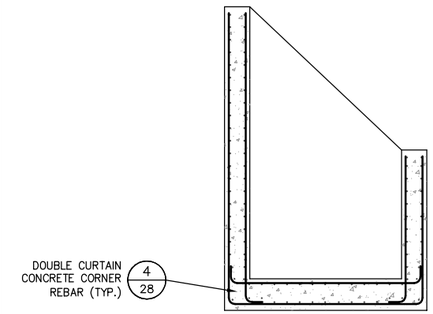

3/20 INLET STRUCTURE REBAR DETAILS

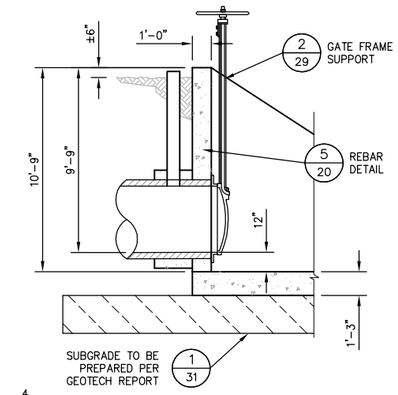

4/20 INLET STRUCTURE SECTION

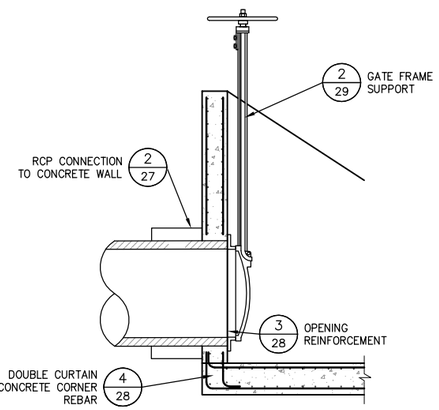

5/20 INLET STRUCTURE REBAR DETAILS

SL-0108

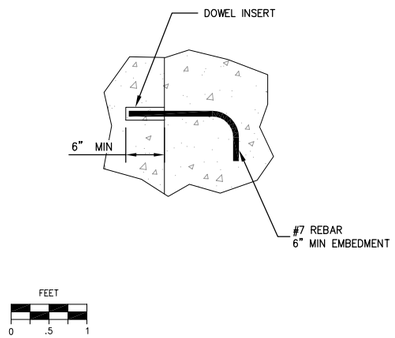

6/20 DOWEL DETAIL

DETAIL #

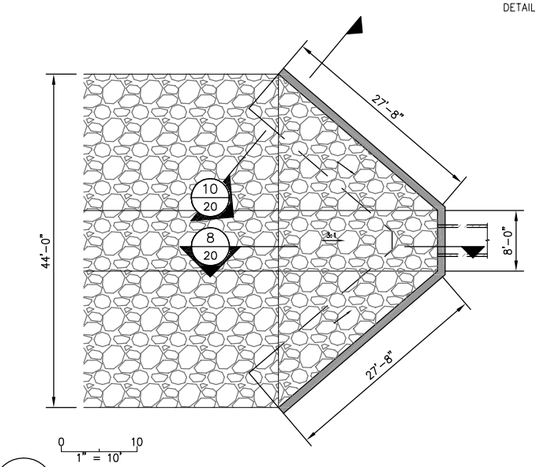

7/20 SETTLING CHANNEL INLET

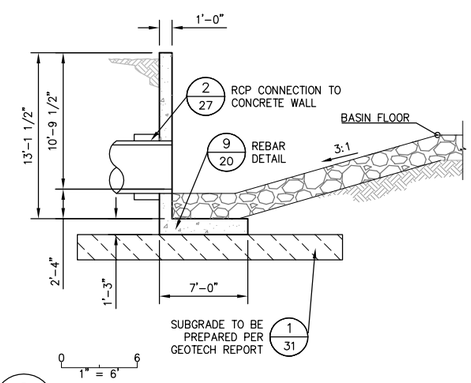

8/20 SETTLING CHANNEL STRUCTURAL SECTION

DETAIL #

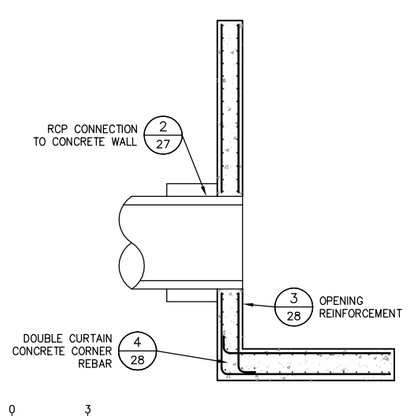

9/20 SETTLING CHANNEL STRUCTURE REBAR DETAILS

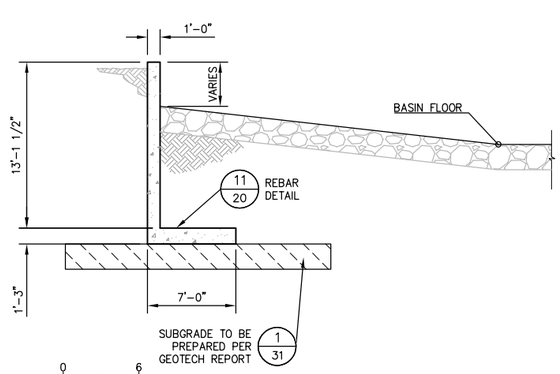

10/20 SETTLING CHANNEL STRUCTURAL SECTION

DETAIL #

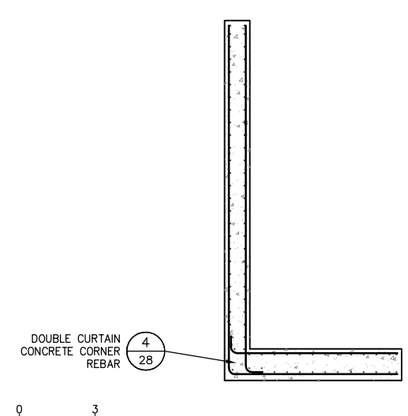

11/20 SETTLING CHANNEL STRUCTURE REBAR DETAILS

COPYRIGHT 2014 by PROVOST & PRITCHARD ENGINEERING GROUP, INC. (dba Provost & Pritchard Consulting Group, Inc.) expressly reserves its common law copyright and other property rights in these plans. These plans are not to be reproduced, changed or copied in any form or manner whatsoever, nor are they to be assigned to any third party without first obtaining the written permission and consent of Provost & Pritchard Engineering Group, Inc. In the event of unauthorized reuse of these plans by a third party, the third party shall hold the firm of Provost & Pritchard Engineering Group, Inc. harmless, and shall reimburse Provost & Pritchard Engineering Group, Inc.'s legal fees associated with defending and enforcing these rights.

PRELIMINARY
NOT FOR CONSTRUCTION
3/13/14

No.	REVISION	BY	DATE

REGISTERED PROFESSIONAL ENGINEER RANDY S. HOPKINS No. 63538 Civil STATE OF CALIFORNIA

DATE SIGNED:

NIELSEN RECHARGE BASIN
APN 326-140-10, 11, 18 AND 23
CITY OF FRESNO
FRESNO COUNTY, CA

PROJECT TURNOUT DETAILS

PROVOST & PRITCHARD
CONSULTING GROUP
An Employee Owned Company
2505 ALLUVIAL AVENUE
CLOVIS, CALIFORNIA 93611-9166
559/326-1100 FAX 559/326-1090
www.ppeng.com

DESIGN ENGINEER: RANDY HOPKINS
LICENSE NO: 63538
DRAFTED BY: ----
CHECKED BY: ----
DATE: 3/13/14
JOB NO: 156112C1

0 1
ORIGINAL SCALE SHOWN IS IN INCHES. ADJUST SCALE FOR REDUCED OR ENLARGED PLANS.

SHEET 20 OF 34

3/13/2014 11:02 AM V:\Clients\Fresno City of-1561\156112C1-Nielsen Recharge Basin\DWG\SHEET\20 PROJECT TURNOUT DETAILS.dwg -Gabriel Do Revenoso

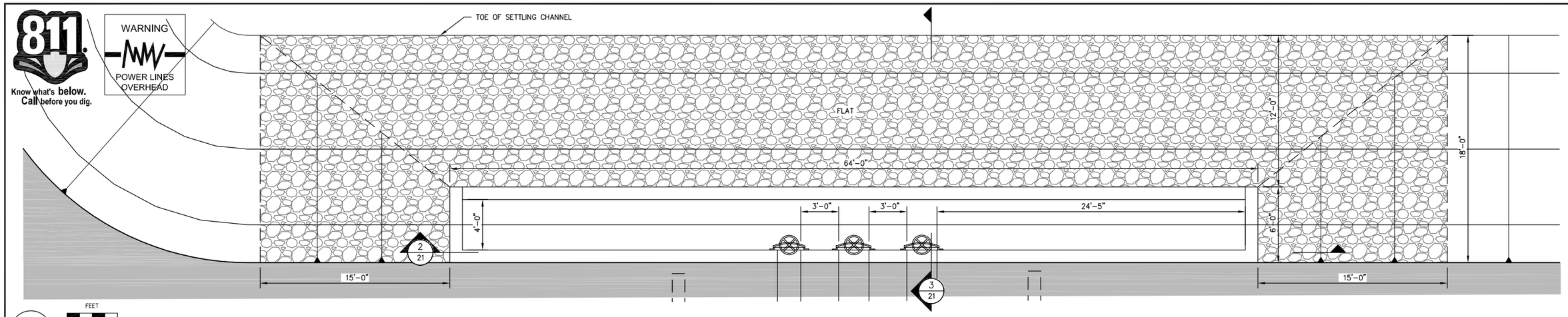

1/21

WEIR/DISTRIBUTION STRUCTURE PLAN VIEW

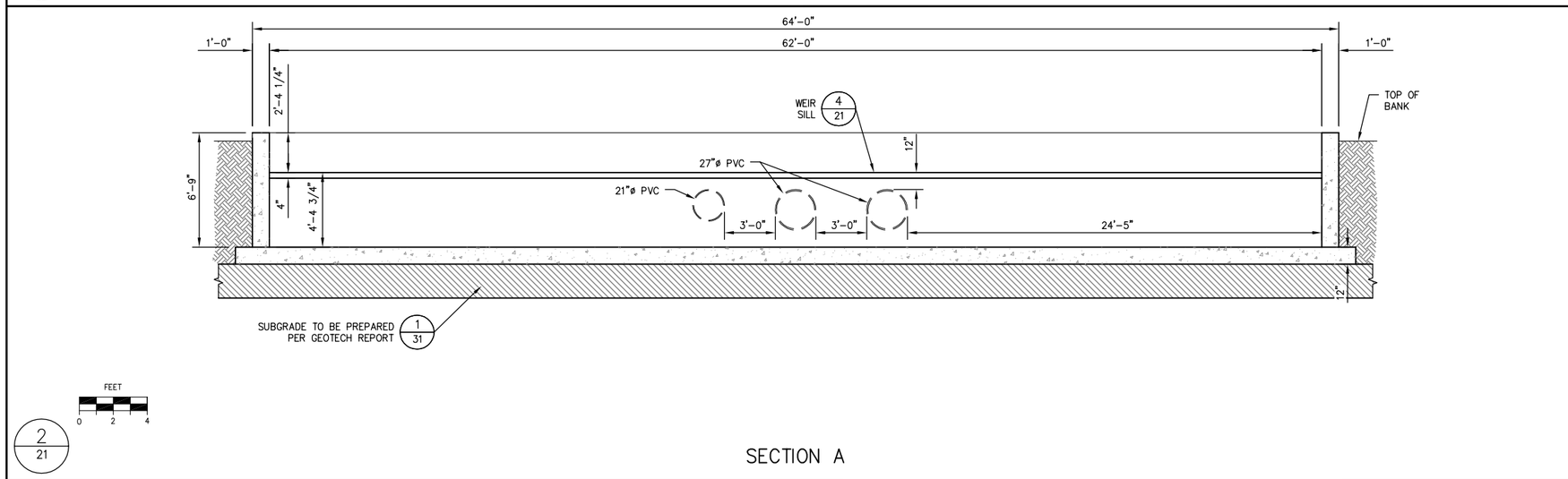

2/21

SECTION A

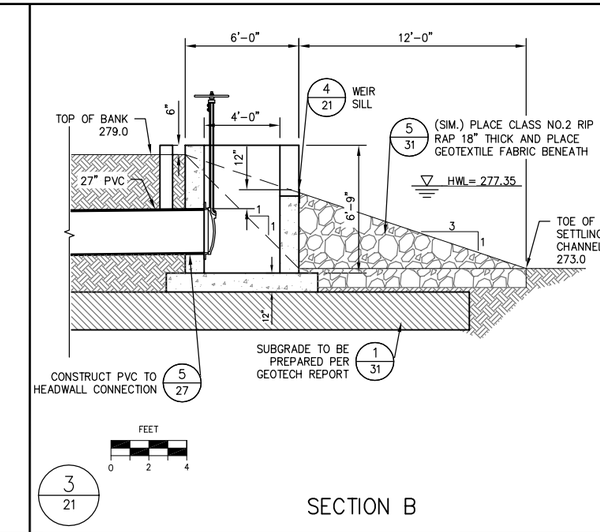

3/21

SECTION B

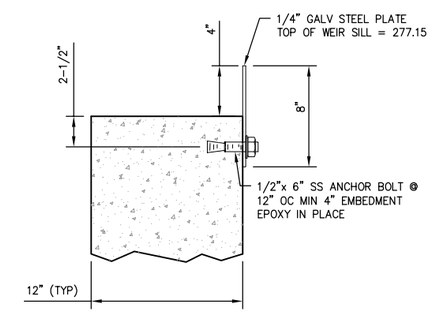

NOT TO SCALE

4/21

WEIR SILL

COPYRIGHT 2014 by PROVOST & PRITCHARD CONSULTING GROUP d/b/a Provost & Pritchard Engineering Group, Inc.
Provost & Pritchard Engineering Group, Inc. expressly reserves its common law copyright and other property rights in these plans. These plans are not to be reproduced, changed or copied in any form or manner whatsoever, nor are they to be assigned to any third party without first obtaining the written permission and consent of Provost & Pritchard Engineering Group, Inc. In the event of unauthorized reuse of these plans by a third party, the third party shall hold the firm of Provost & Pritchard Engineering Group, Inc. harmless, and shall indemnify the firm of Provost & Pritchard Engineering Group, Inc.'s legal fees associated with defending and enforcing these rights.

No.	REVISION	BY	DATE

PRELIMINARY
NOT FOR CONSTRUCTION
3/13/14

REGISTERED PROFESSIONAL ENGINEER
RANDY S. HOPKINS
No. 63538
Civil
STATE OF CALIFORNIA

DATE SIGNED:

NIELSEN RECHARGE BASIN
APN 326-140-10, 11, 18 AND 23
CITY OF FRESNO
FRESNO COUNTY, CA

DISTRIBUTION STRUCTURE

PROVOST & PRITCHARD
CONSULTING GROUP
An Employee Owned Company
2505 ALLUVIAL AVENUE
CLOVIS, CALIFORNIA 93611-9166
559/326-1100 FAX 559/326-1090
www.ppeng.com

DESIGN ENGINEER: RANDY HOPKINS
LICENSE NO: 63538
DRAFTED BY: ----
CHECKED BY: ----
DATE: 3/13/14
JOB NO: 156112C1

0 1
ORIGINAL SCALE SHOWN IS IN INCHES. ADJUST SCALE FOR REDUCED OR ENLARGED PLANS.

SHEET 21 OF 34

3/13/2014 11:03 AM V:\Clients\Fresno City of-1561\156112C1-Nielsen Recharge Basin\DWG\SHEET\21 DISTRIBUTION STRUCTURE.dwg -Gabriel Da Revenso

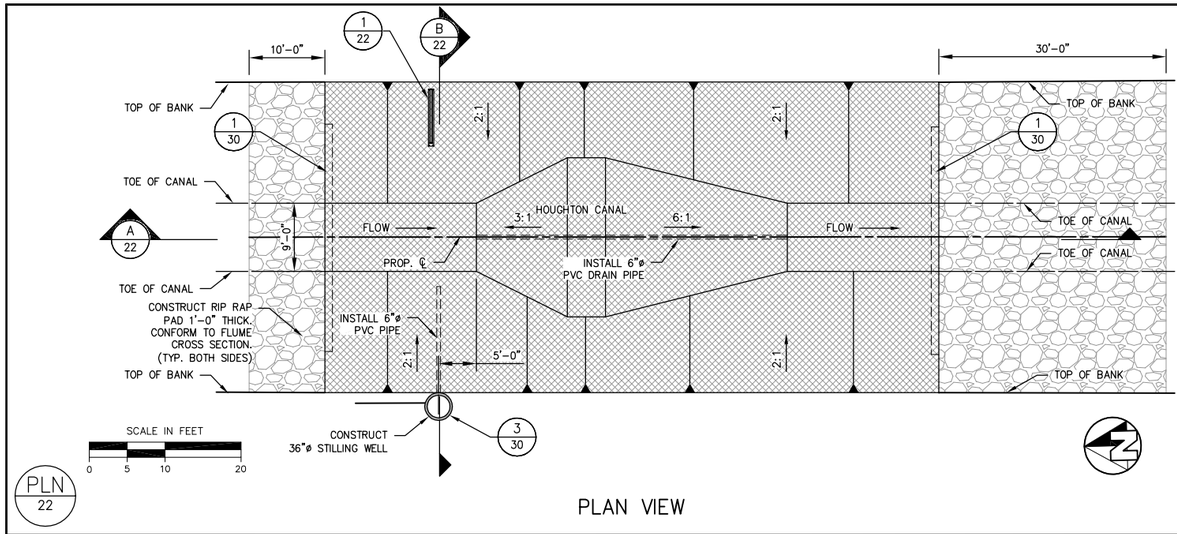

PLN 22

PLAN VIEW

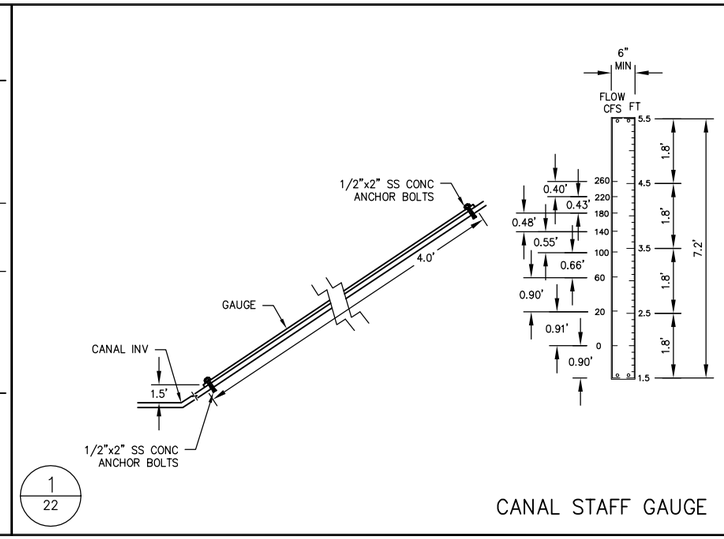

1 22

CANAL STAFF GAUGE

NOTE:
1) THE CUSTOM STAFF GAUGE IS BASED ON THE DESIGN GEOMETRY OF THE FLUME AND CANAL SIDE SLOPE. IF THE CONSTRUCTED GEOMETRY IS DIFFERENT FROM THE DESIGN, AND THE STAFF GAUGE IS NOT ACCURATE, THE CONTRACTOR SHALL FURNISH AND INSTALL A NEW STAFF GAUGE AT THEIR COST.

2) CONTRACTOR SHALL SUBMIT SHOP DRAWING OF CUSTOM STAFF GAUGE INCLUDING PROPOSED MATERIAL, THICKNESS AND FONT SIZES FOR APPROVAL.

3) THE FLOW RATE AND DEPTH NUMBERS SHOWN ABOVE NEED TO BE SHOWN ON THE STAFF GAUGE.

SCALE = NTS

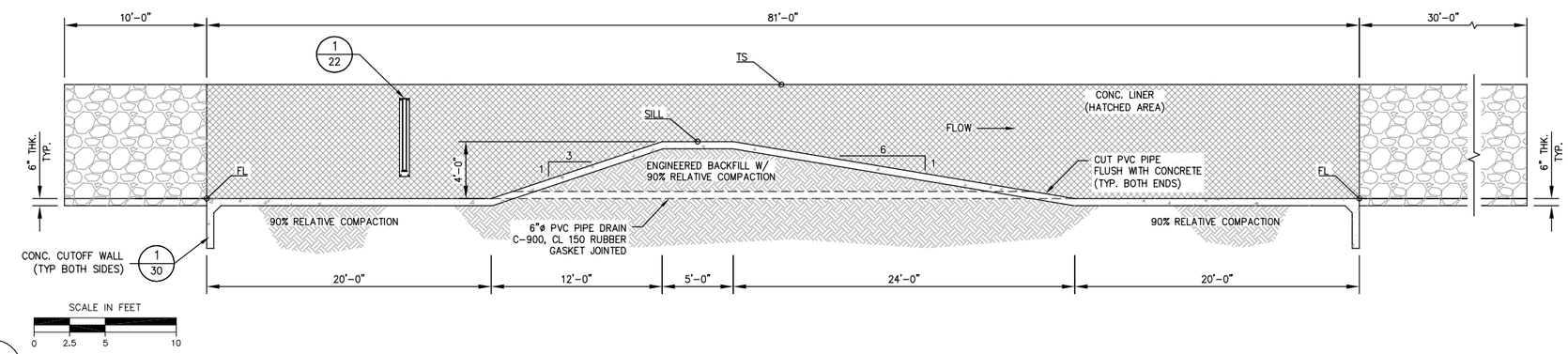

A 22

SECTION A

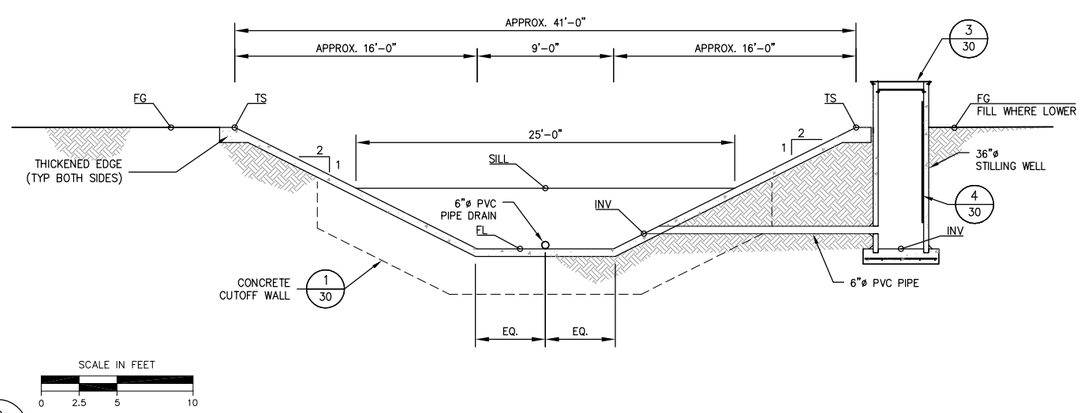

B 22

SECTION B

COPYRIGHT 2014 by PROVOST & PRITCHARD CONSULTING GROUP & Pritchard Engineering Co. Inc. expressly reserves its common law copyright and other property rights in these plans. These plans are not to be reproduced, changed or copied in any form or manner whatsoever, nor are they to be assigned to any third party without first obtaining the written permission and consent of Provost & Pritchard Engineering Group, Inc. In the event of unauthorized reuse of these plans by a third party, the third party shall hold the firm of Provost & Pritchard Engineering Group, Inc. harmless, and shall indemnify the firm of Provost & Pritchard Engineering Group, Inc.'s legal fees associated with defending and enforcing these rights.

PRELIMINARY
NOT FOR CONSTRUCTION
3/13/14

No.	REVISION	BY	DATE

REGISTERED PROFESSIONAL ENGINEER RANDY S. HOPKINS No. 63538 Civil STATE OF CALIFORNIA

DATE SIGNED:

NIELSEN RECHARGE BASIN
APN 326-140-10, 11, 18 AND 23
CITY OF FRESNO
FRESNO COUNTY, CA

REPLOGLE FLUME

EST. 1961
PROVOST & PRITCHARD
CONSULTING GROUP
An Employee Owned Company
7095 N. ASHLEY AVENUE
CLOVIS, CALIFORNIA 93611-9166
559/326-1100 FAX 559/326-1090
www.ppeng.com

DESIGN ENGINEER: RANDY HOPKINS
LICENSE NO: 63538
DRAFTED BY: ----
CHECKED BY: ----
DATE: 3/13/14
JOB NO: 156112C1

0 1
ORIGINAL SCALE SHOWN IS IN INCHES. ADJUST SCALE FOR REDUCED OR ENLARGED PLANS.

SHEET 22 OF 34

3/13/2014 11:03 AM V:\Clients\Fresno City of-1561\156112C1-Nielsen Recharge Basin\DWG\SHEETS\22 REPLOGLE FLUME.dwg -Gabriel Da Reviroso

TO BE SUBMITTED AT 90% SUBMITTAL

WARNING
POWER LINES OVERHEAD

811
Know what's **below.**
Call before you dig.

COPYRIGHT 2014 by PROVOST & PRITCHARD CONSULTING GROUP (formerly Provost & Pritchard Engineering Group, Inc.) expressly reserves its common law copyright and other property rights in these plans. These plans are not to be reproduced, changed or copied in any form or manner whatsoever, nor are they to be assigned to any third party without first obtaining the written permission and consent of Provost & Pritchard Engineering Group, Inc. In the event of unauthorized reuse of these plans by a third party, the third party shall hold the firm of Provost & Pritchard Engineering Group, Inc. harmless, and shall defend and indemnify Provost & Pritchard Engineering Group, Inc.'s legal fees associated with defending and enforcing these rights.

PRELIMINARY
NOT FOR CONSTRUCTION
3/13/14

No.	REVISION	BY	DATE

REGISTERED PROFESSIONAL ENGINEER
RANDY S. HOPKINS
No. 63538
Civil
STATE OF CALIFORNIA

DATE SIGNED: _____

NIELSEN RECHARGE BASIN
APN 326-140-10, 11, 18 AND 23
CITY OF FRESNO
FRESNO COUNTY, CA

REPLOGLE FLUME DETAILS

EST. 1961
PROVOST & PRITCHARD
CONSULTING GROUP
An Employee Owned Company
705 S. JUNA AVENUE
CLOVIS, CALIFORNIA 93611-9166
559/326-1100 FAX 559/326-1090
www.ppeng.com

DESIGN ENGINEER:
RANDY HOPKINS

LICENSE NO:
63538

DRAFTED BY:	CHECKED BY:
---	---

DATE: 3/13/14

JOB NO: 156112C1

0 1
ORIGINAL SCALE SHOWN IS IN INCHES. ADJUST SCALE FOR REDUCED OR ENLARGED PLANS.

SHEET
23 OF 34

3/13/2014 11:03 AM V:\Clients\Fresno City of-1561\156112C1-Nielsen Recharge Basin\DWG\SHEETS\23 RFP\ 06 F FLUME DETAILS.dwg -Gabriel Do Rosario

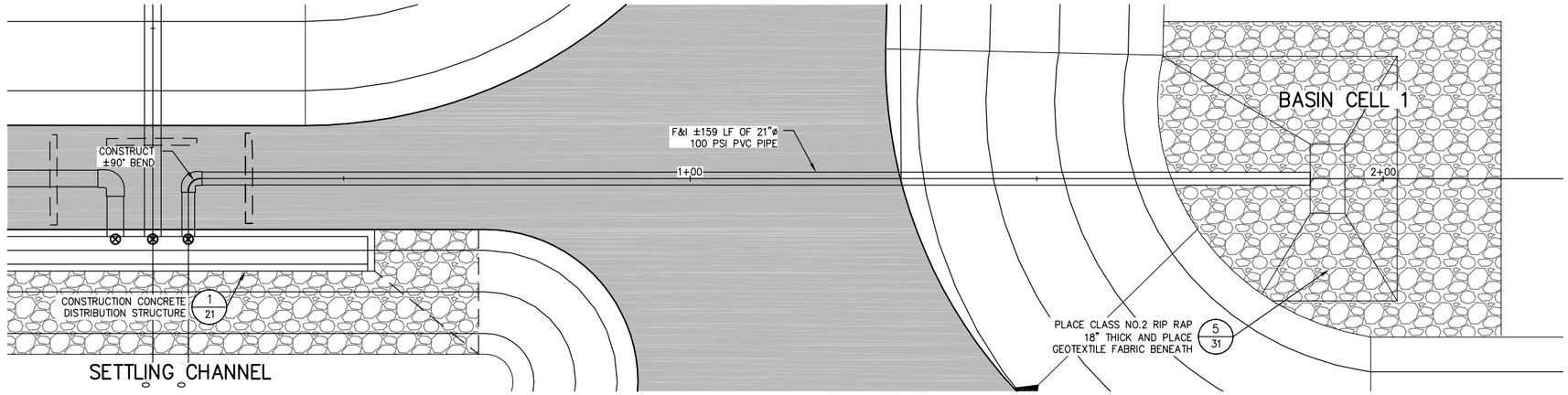

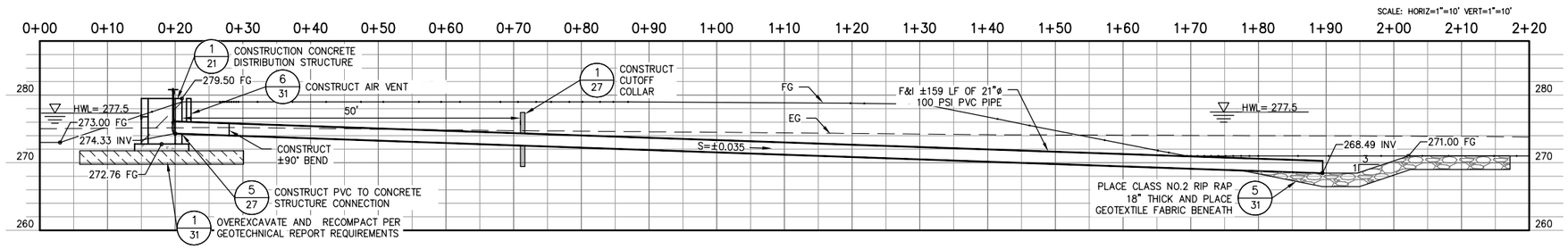

1/24

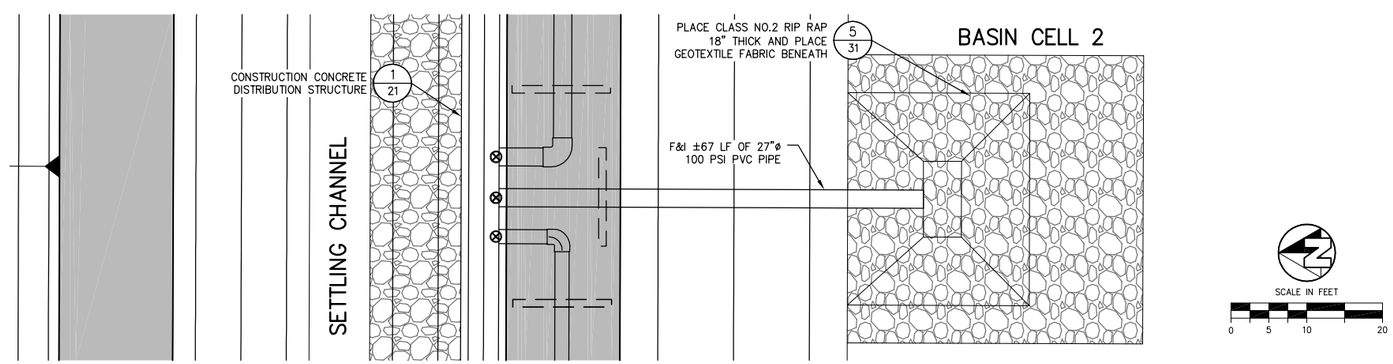

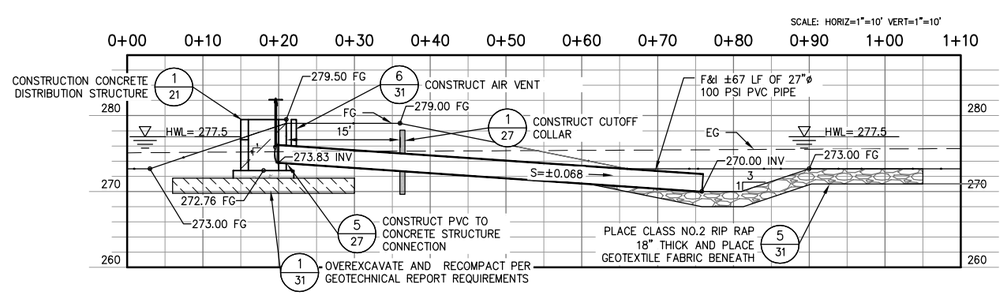

2/24

WARNING
POWER LINES OVERHEAD

811 Know what's below. Call before you dig.

COPYRIGHT 2014 by PROVOST & PRITCHARD CONSULTING GROUP (PROVOST & PRITCHARD, LLP) Provost & Pritchard Engineering Group, Inc. expressly reserves its common law copyright and other property rights in these plans. These plans are not to be reproduced, changed or copied in any form or manner whatsoever, nor are they to be assigned to any third party without first obtaining the written permission and consent of Provost & Pritchard Engineering Group, Inc. In the event of unauthorized reuse of these plans by a third party, the third party shall hold the firm of Provost & Pritchard Engineering Group, Inc. harmless, and shall defend and indemnify Provost & Pritchard Engineering Group, Inc.'s legal fees associated with defending and enforcing these rights.

No.	REVISION	BY	DATE

PRELIMINARY
NOT FOR CONSTRUCTION
3/13/14

REGISTERED PROFESSIONAL ENGINEER — RANDY S. HOPKINS — No. 63538 — Civil — STATE OF CALIFORNIA

DATE SIGNED:

NIELSEN RECHARGE BASIN
APN 326-140-10, 11, 18 AND 23
CITY OF FRESNO
FRESNO COUNTY, CA

BASIN CELL 1 AND 2 INLETS

FST 21631
PROVOST & PRITCHARD
CONSULTING GROUP
An Employee Owned Company
286 W. CUTLER AVENUE
CLOVIS, CALIFORNIA 93611-9166
559/326-1100 FAX 559/326-1090
www.ppeng.com

DESIGN ENGINEER: RANDY HOPKINS
LICENSE NO: 63538
DRAFTED BY: ----
CHECKED BY: ----
DATE: 3/13/14
JOB NO: 156112C1

0 1
ORIGINAL SCALE SHOWN IS IN INCHES. ADJUST SCALE FOR REDUCED OR ENLARGED PLANS.

SHEET 24 OF 34

3/13/2014 11:03 AM V:\Clients\Fresno City of-1561\156112C1-Nielsen Recharge Basin\DWG\SHEET\24 BASIN CELL 1 AND 2 INLETS.dwg -Gabriel Da Revoroso

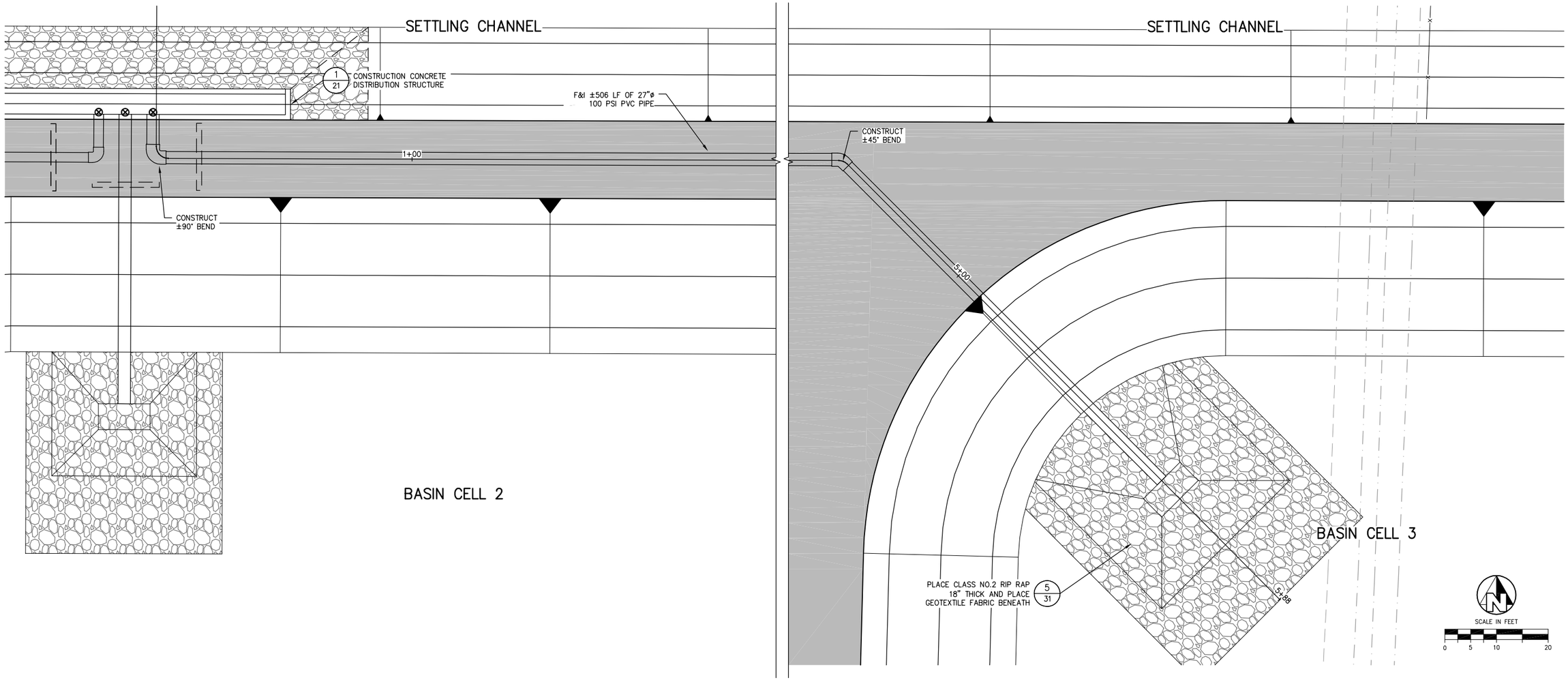

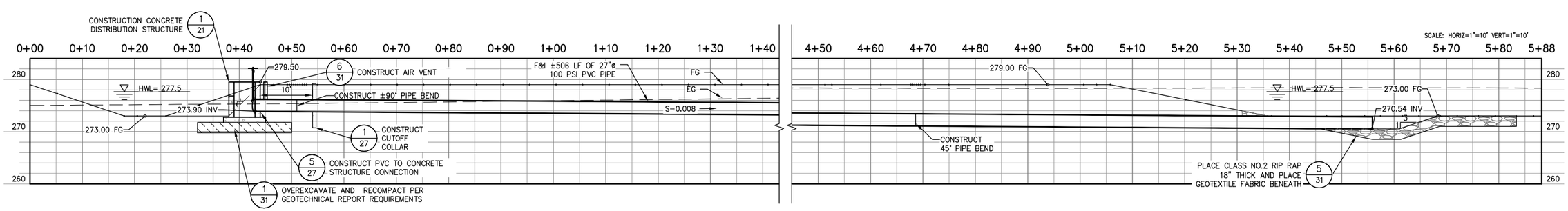

1 / 25

COPYRIGHT 2014 by PROVOST & PRITCHARD ENGINEERING GROUP, INC. (PROVOST & PRITCHARD ENGINEERING GROUP, Inc. expressly reserves its common law copyright and other property rights in these plans. These plans are not to be reproduced, changed or copied in any form or manner whatsoever, nor are they to be assigned to any third party without first obtaining the written permission and consent of Provost & Pritchard Engineering Group, Inc. In the event of unauthorized reuse of these plans by a third party, the third party shall hold the firm of Provost & Pritchard Engineering Group, Inc. harmless, and shall defend and indemnify Provost & Pritchard Engineering Group, Inc.'s legal fees associated with defending and enforcing these rights.

No.	REVISION	BY	DATE

PRELIMINARY
NOT FOR CONSTRUCTION
3/13/14

REGISTERED PROFESSIONAL ENGINEER RANDY S. HOPKINS No. 63538 Civil STATE OF CALIFORNIA

DATE SIGNED: _____

NIELSEN RECHARGE BASIN
APN 326-140-10, 11, 18 AND 23
CITY OF FRESNO
FRESNO COUNTY, CA

BASIN CELL 3 INLET

PROVOST & PRITCHARD
CONSULTING GROUP
A 75 Employee Owned Company
2955 N. ALLUVIAL AVENUE
CLOVIS, CALIFORNIA 93611-9166
559/326-1100 FAX 559/326-1090
www.ppeng.com

DESIGN ENGINEER: RANDY HOPKINS
LICENSE NO: 63538
DRAFTED BY: ----
CHECKED BY: ----
DATE: 3/13/14
JOB NO: 156112C1
0 1
ORIGINAL SCALE SHOWN IS IN INCHES. ADJUST SCALE FOR REDUCED OR ENLARGED PLANS.
SHEET 25 OF 34

3/13/2014 11:03 AM V:\Clients\Fresno City of-156112C1-Nielsen Recharge Basin\DWG\SHEET\25 BASIN CELL 3 INLET.dwg -Gabriel Da Revoroso

FN-0142

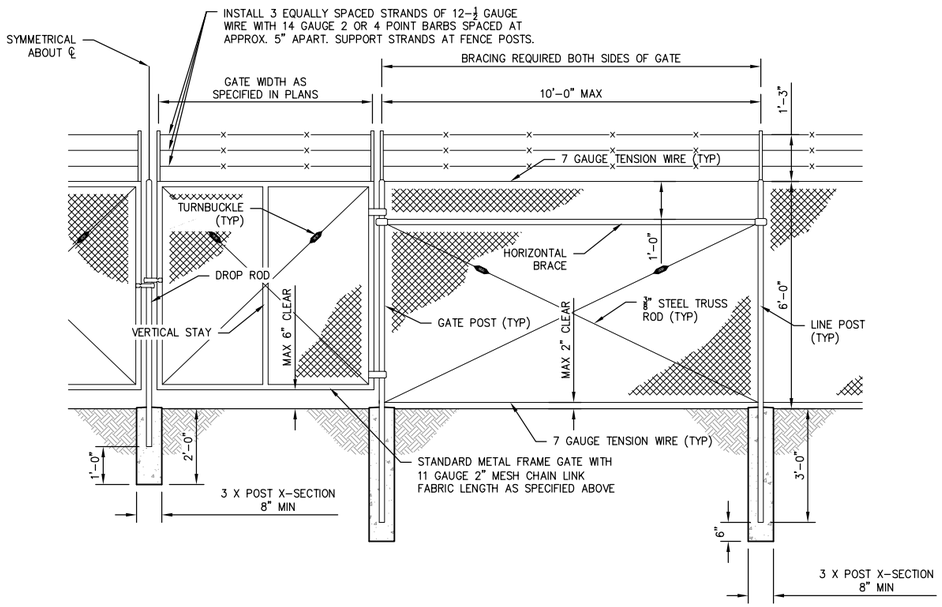

1/26

CHAIN LINK FENCE DOUBLE GATE

FN-0113

FENCE AND POST SCHEDULE			
HEIGHT	LOCATION	NOMINAL ID	WEIGHT LB/FT
6'-0" AND LESS	LINE POST	1-1/2"	2.71
	END, LATCH & CORNER POST	2"	3.65
	BRACES	1-1/4"	2.27
	FABRIC	11 GAUGE	
OVER 6'-0"	LINE POST	2"	3.65
	END, LATCH & CORNER POST	2-1/2"	5.79
	BRACES	1-1/4"	2.27
	FABRIC	9 GAUGE	

GATE POST SCHEDULE			
HEIGHT	GATE WIDTH	NOMINAL ID	WEIGHT LB/FT
6'-0" AND LESS	UP TO 6'	2-1/2"	5.79
	6' TO 12'	4"	10.79
	12' TO 18'	5"	14.62
	18' TO 24'	6"	18.97
OVER 6'-0"	UP TO 6'	3"	7.58
	6' TO 12'	5"	14.62
	12' TO 18'	6"	18.97
	18' TO 24'	8"	28.55

NOTES

1. LINE POST SPACING SHALL BE 10' MAX.
2. ALL FENCE AND GATE HARDWARE TO BE GALVANIZED.
3. VERTICAL STAYS REQUIRED FOR GATES WIDER THAN 6'.

3/26

CHAIN LINK FENCE NOTES

FN-0111

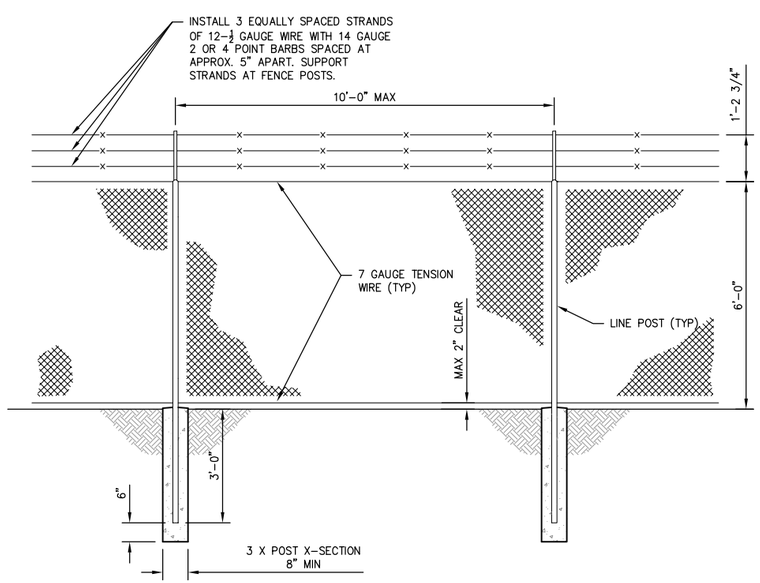

2/26

CHAIN LINK FENCE

COPYRIGHT 2014 by PROVOST & PRITCHARD ENGINEERING GROUP, INC. The firm of Provost & Pritchard Engineering Group, Inc. expressly reserves its common law copyright and other property rights in these plans. These plans are not to be reproduced, changed or copied in any form or manner whatsoever, nor are they to be assigned to any third party without first obtaining the written permission and consent of Provost & Pritchard Engineering Group, Inc. In the event of unauthorized reuse of these plans by a third party, the third party shall hold the firm of Provost & Pritchard Engineering Group, Inc. harmless, and shall reimburse Provost & Pritchard Engineering Group, Inc.'s legal fees associated with defending and enforcing these rights.

No.	REVISION	BY	DATE

PRELIMINARY
NOT FOR CONSTRUCTION
3/13/14

REGISTERED PROFESSIONAL ENGINEER RANDY S. HOPKINS No. 63538 Civil STATE OF CALIFORNIA

DATE SIGNED: _____

NIELSEN RECHARGE BASIN
APN 326-140-10, 11, 18 AND 23
CITY OF FRESNO
FRESNO COUNTY, CA

CHAIN LINK FENCE DETAILS

FST 21661
PROVOST & PRITCHARD
CONSULTING GROUP
An Employee Owned Company
286 W. CUTLER AVE.
CLOVIS, CALIFORNIA 93611-9166
559/326-1100 FAX 559/326-1090
www.ppeng.com

DESIGN ENGINEER: RANDY HOPKINS
LICENSE NO: 63538
DRAFTED BY: ----
CHECKED BY: ----
DATE: 3/13/14
JOB NO: 156112C1
0 1
ORIGINAL SCALE SHOWN IS IN INCHES. ADJUST SCALE FOR REDUCED OR ENLARGED PLANS.

3/13/2014 11:04 AM V:\Clients\Fresno City of-1561\156112C1-Nielsen Recharge Basin\DWG\SHEET\26 CHAIN LINK FENCE DETAILS.dwg -Gabriel Da Revoroso

PI-0401

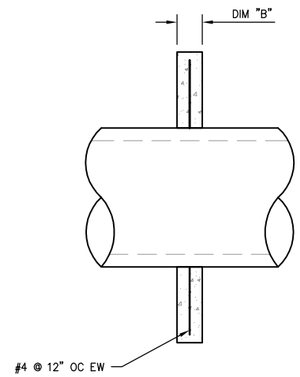

PIPE ID	DIM "A"	DIM "B"
18"	5'-0"	6"
21"	5'-3"	6"
24"	5'-6"	6"
27"	6'-3"	6"
30"	7'-0"	6"
36"	8'-6"	6"
42"	9'-3"	6"
48"	10'-0"	8"
54"	11'-6"	8"
60"	12'-0"	8"

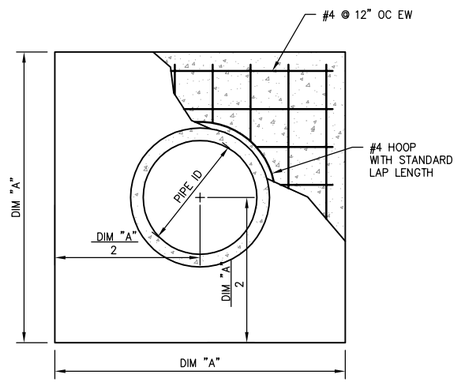

NOT TO SCALE

1/27

CONCRETE CUTOFF COLLAR

PI-0402

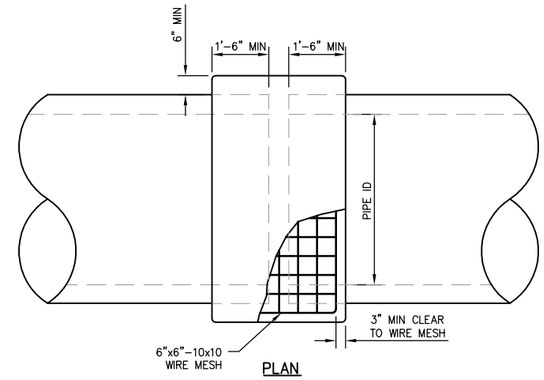

PLAN

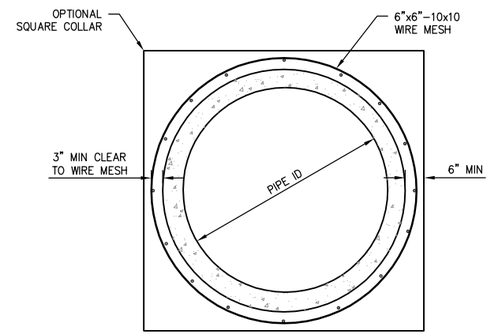

SECTION

NOTE

JOINT TO BE BANDED ON THE INSIDE PRIOR TO PLACING OF COLLAR (HAND HOLE IN EXISTING PIPE IS ALLOWED TO MAKE INSIDE BAND). TWENTY-FOUR HOURS AFTER INSIDE BAND IS MADE, COAT WITH EPOXY OVER BANDED AREA. HAND HOLE PLUG TO BE EPOXIED AT MATCHING SURFACES WITH PIPE AND THEN MORTAR AND PLUG HOLE. UNLESS DIRECTED OTHERWSE BY THE OWNER'S INSPECTOR, WHEN IN PLACE AND SET, EXTERNAL COLLAR MUST BE WATERED DOWN TO A POINT OF SATURATION THEN COVERED WITH WET BURLAP AND SHADED WITH SIX INCHES OF SOIL OVER ENTIRE AREA, AND SAID SOIL MUST BE KEPT MOIST FOR A PERIOD OF FIVE CONTINUOUS DAYS. THE ENTIRE SURFACE OF THE PIPE IN THE COLLAR AREA IS TO BE COATED WITH EPOXY (REZI-WELD OR ENGINEER APPROVED EQUAL) PRIOR TO POURING THE COLLAR.

NOT TO SCALE

4/27

CONCRETE PIPE COLLAR

PI-0201

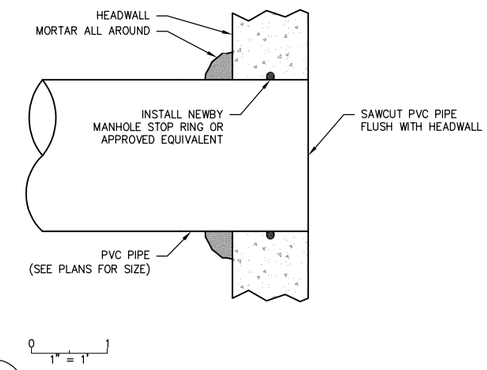

5/27

PVC PIPE HEADWALL JOINT

PI-0101

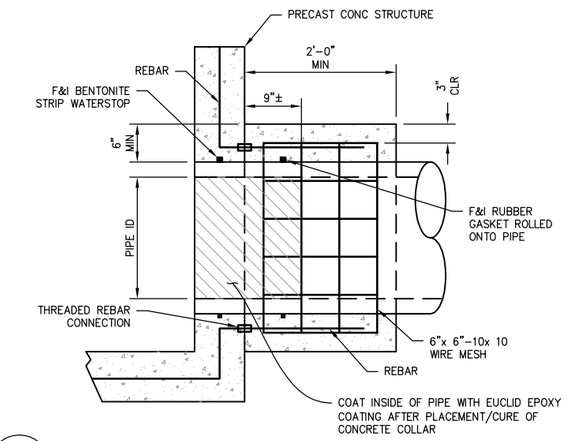

2/27

RGRCP TO PRECAST CONCRETE CONNECTION

SCALE = NTS

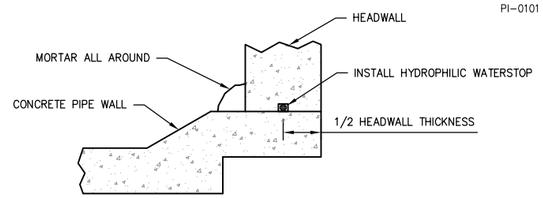

BELL END

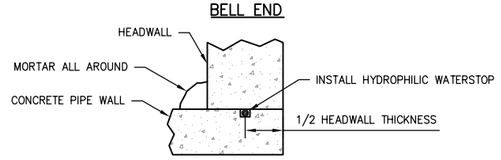

SPIGOT END

NOTES

1. ALL CONNECTIONS TO BE WATERTIGHT.
2. IF GATE IS TO BE MOUNTED AT THE CONNECTION, USE SPIGOT END OF PIPE OR CUT OFF PIPE BELL.

NOT TO SCALE

3/27

CONCRETE PIPE TO HEADWALL CONNECTION

COPYRIGHT 2014 by PROVOST & PRITCHARD CONSULTING GROUP & Pritchard Engineering Group, Inc. expressly reserves its common law copyright and other property rights in these plans. These plans are not to be reproduced, changed or copied in any form or manner whatsoever, nor are they to be assigned to any third party without first obtaining the written permission and consent of Provost & Pritchard Engineering Group, Inc. In the event of unauthorized reuse of these plans by a third party, the third party shall hold the firm of Provost & Pritchard Engineering Group, Inc. harmless, and shall indemnify the firm of Provost & Pritchard Engineering Group, Inc.'s legal fees associated with defending and enforcing these rights.

No.	REVISION	BY	DATE

PRELIMINARY
NOT FOR CONSTRUCTION
3/13/14

REGISTERED PROFESSIONAL ENGINEER
RANDY S. HOPKINS
No. 63538
Civil
STATE OF CALIFORNIA

DATE SIGNED:

NIELSEN RECHARGE BASIN
APN 326-140-10, 11, 18 AND 23
CITY OF FRESNO
FRESNO COUNTY, CA

CONSTRUCTION DETAILS 1

EST. 1961
PROVOST & PRITCHARD
CONSULTING GROUP
An Employee Owned Company
7095 N. ARTHUR AVENUE
CLOVIS, CALIFORNIA 93611-9166
559/326-1100 FAX 559/326-1090
www.ppeng.com

DESIGN ENGINEER: RANDY HOPKINS
LICENSE NO: 63538
DRAFTED BY: ---
CHECKED BY: ---
DATE: 3/13/14
JOB NO: 156112C1

0 1
ORIGINAL SCALE SHOWN IS IN INCHES. ADJUST SCALE FOR REDUCED OR ENLARGED PLANS.

SHEET 27 OF 34

3/13/2014 11:04 AM V:\Clients\Fresno City of-1561\156112C1-Nielsen Recharge Basin\DWG\SHEETV\27 CONSTRUCTION DETAIL S 1.dwg -Gabriel Do Rosario

STRUCTURAL CONCRETE NOTES

MINIMUM CONCRETE COVER, 2006 IBC, SECTION 1907.7.1	
CONCRETE CAST AGAINST AND PERMANENTLY EXPOSED TO EARTH	3"
CONCRETE EXPOSED TO CONCRETE FORMS AND WEATHER	
No. 5 BAR, OR SMALLER	1 1/2"
No. 6 BAR OR LARGER	2"
CONCRETE NOT EXPOSED TO WEATHER OR IN CONTACT WITH GROUND	
SLABS, WALLS AND JOISTS	3/4"
BEAMS AND COLUMNS	1 1/2"

Db = BAR DIAMETER
D = FINISHED INSIDE BEND DIA.
D = 6Db FOR #3 THROUGH #8

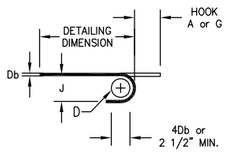

180–DEG.

BAR SIZE	DIMENSIONS OF STANDARD 180° HOOKS. ALL GRADES		
	A OR G	J	D
#3	5"	3"	2 1/4"
#4	6"	4"	3"
#5	7"	5"	3 3/4"
#6	8"	6"	4 1/2"
#7	10"	7"	5 1/4"
#8	11"	8"	6"

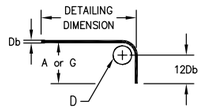

90–DEG.

DIMENSIONS OF STANDARD 90° HOOKS ALL GRADES	
A or G	D
6"	2 1/4"
8"	3"
10"	3 3/4"
12"	4 1/2"
14"	5 1/4"
16"	6"

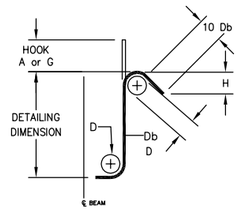

135–DEG.
SEISMIC STIRRUP / TIE

135° SEISMIC HOOK			
SIZE	D	A or G	APPROX. H
#3	1 1/2"	5"	3 1/2"
#4	2"	6 1/2"	4 1/2'
#5	2 1/2"	8"	5 1/2"
#6	4 1/2"	11"	6 1/2'
#7	5 1/4"	12 1/2"	7 3/4"
#8	6"	14 1/2"	9"

REINFORCEMENT BENDS

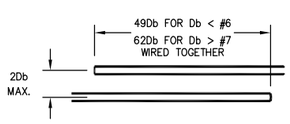

STRAIGHT REBAR SPLICE

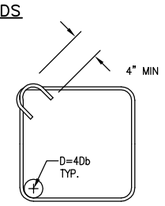

TIE

NOT TO SCALE

1/28

STRUCTURAL NOTES AND DETAILS

SL–0123m

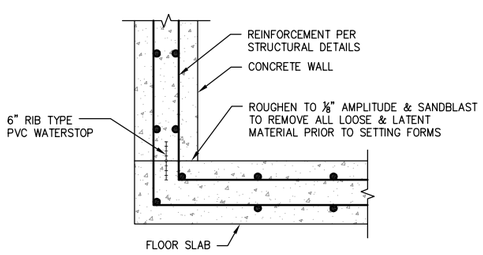

NOTE:
ALL FLOOR TO WALL CONSTRUCTION JOINTS SHALL HAVE 6" RIB TYPE PVC WATERSTOP

NOT TO SCALE

2/28

CONCRETE CONSTRUCTION JOINT

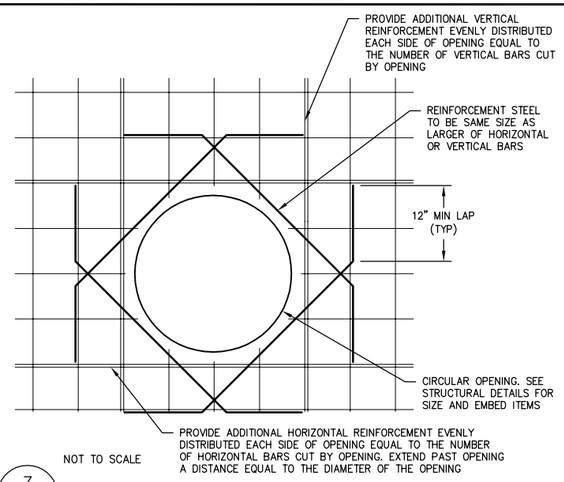

NOT TO SCALE

3/28

REINFORCEMENT AT OPENINGS

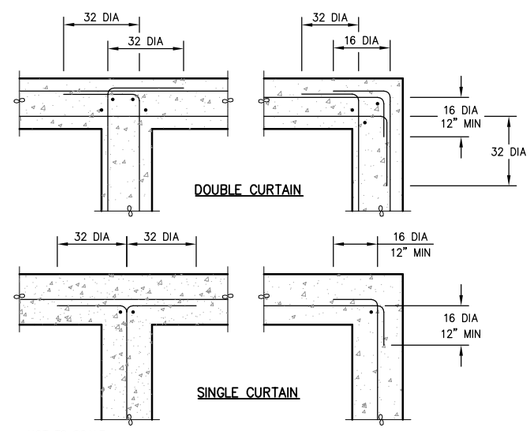

NOT TO SCALE

4/28

REINFORCEMENTS WITH NO WATERSTOPS

COPYRIGHT 2014 by PROVOST & PRITCHARD ENGINEERING GROUP, INC. (PROVOST & PRITCHARD) The firm of Provost & Pritchard Engineering Group, Inc. expressly reserves its common law copyright and other property rights in these plans. These plans are not to be reproduced, changed or copied in any form or manner whatsoever, nor are they to be assigned to any third party without first obtaining the written permission and consent of Provost & Pritchard Engineering Group, Inc. In the event of unauthorized reuse of these plans by a third party, the third party shall hold the firm of Provost & Pritchard Engineering Group, Inc. harmless, and shall defend and indemnify Provost & Pritchard Engineering Group, Inc.'s legal fees associated with defending and enforcing these rights.

PRELIMINARY
NOT FOR CONSTRUCTION
3/13/14

No.	REVISION	BY	DATE

REGISTERED PROFESSIONAL ENGINEER
RANDY S. HOPKINS
No. 63538
Civil
STATE OF CALIFORNIA

DATE SIGNED:

NIELSEN RECHARGE BASIN
APN 326–140–10, 11, 18 AND 23
CITY OF FRESNO
FRESNO COUNTY, CA

CONSTRUCTION DETAILS 2

EST. 1963
PROVOST & PRITCHARD
ENGINEERING GROUP
147 Emerald Oaks Court/Party
2505 CLOVIS AVENUE
CLOVIS, CALIFORNIA 93611-9166
559/326-1100 FAX 559/326-1090
www.ppeng.com

DESIGN ENGINEER:
RANDY HOPKINS

LICENSE NO:
63538

DRAFTED BY: ----
CHECKED BY: ----

DATE: 3/13/14

JOB NO: 156112C1

0 1
ORIGINAL SCALE SHOWN IS IN INCHES. ADJUST SCALE FOR REDUCED OR ENLARGED PLANS.

SHEET
28 OF 34

3/13/2014 11:04 AM V:\Clients\Fresno City of-1561\156112C1-Nielsen Recharge Basin\DWG\SHEETS\28 CONSTRUCTION DETAILS 2.dwg -Gabriel Do Reynoso

SL-0621

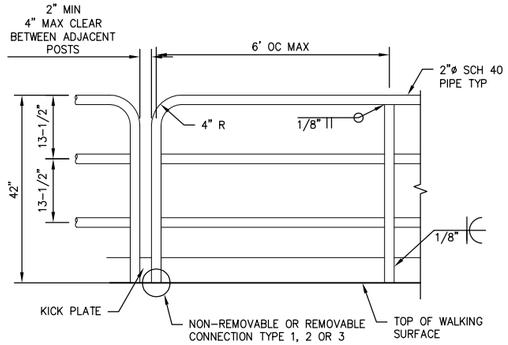

TYPICAL STEEL PIPE HANDRAILING DETAIL

NOTE: ALL HANDRAILING SHALL BE EITHER HOT-DIP GALVANIZED STEEL. ALL HARDWARE SHALL BE STAINLESS STEEL.

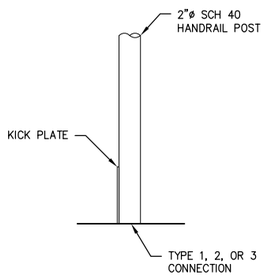

NON-REMOVABLE HANDRAIL POST

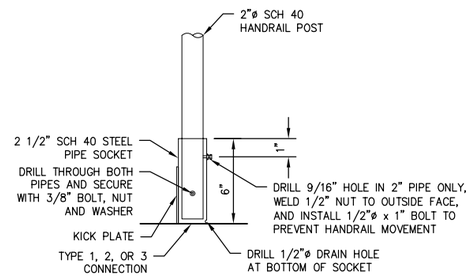

REMOVABLE HANDRAIL POST

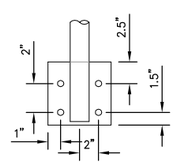

TYPE 2 – SIDE BOLTED CONNECTION
ELEVATION VIEW

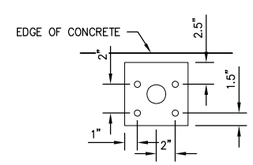

TYPE 3 – TOP BOLTED CONNECTION
PLAN VIEW

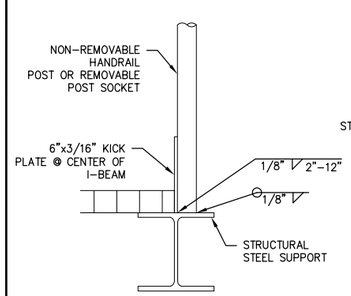

TYPE 1 – WELDED CONNECTION

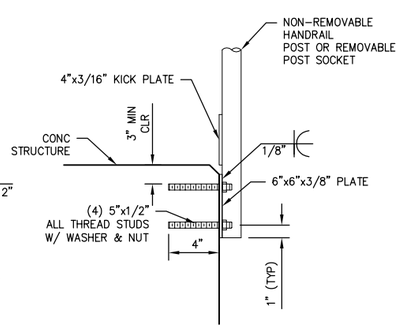

TYPE 2 – SIDE BOLTED CONNECTION

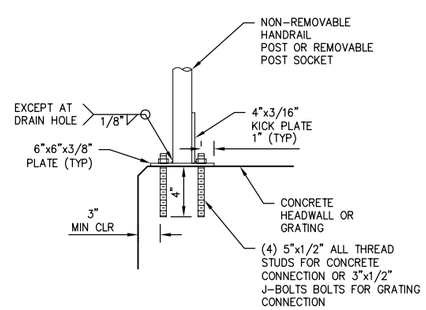

TYPE 3 – TOP BOLTED CONNECTION

NOTE: A LARGER PLATE MAY BE USED TO MOUNT ADJACENT POSTS/SOCKETS TO SAME PLATE

NOT TO SCALE

1
29

TYP HANDRAIL DETAILS

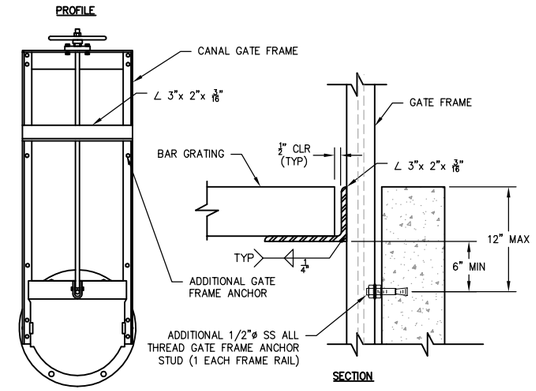

NOT TO SCALE

2
29

GATE FRAME GRATING SUPPORT

COPYRIGHT 2014 by PROVOST & PRITCHARD CONSULTING GROUP (PROVOST & PRITCHARD, INC.)
The firm of Provost & Pritchard Consulting Group, Inc. expressly reserves its common law copyright and other property rights in these plans. These plans are not to be changed or copied in any form or manner whatsoever, nor are they to be assigned to any third party without first obtaining the written permission and consent of Provost & Pritchard Engineering Group, Inc. In the event of unauthorized reuse of these plans by a third party, the third party shall hold the firm of Provost & Pritchard Engineering Group, Inc. harmless, and shall have the right of Provost & Pritchard Engineering Group, Inc.'s legal fees associated with defending and enforcing these rights.

No.	REVISION	BY	DATE

PRELIMINARY
NOT FOR CONSTRUCTION
3/13/14

REGISTERED PROFESSIONAL ENGINEER
RANDY S. HOPKINS
No. 63538
Civil
STATE OF CALIFORNIA

DATE SIGNED:

NIELSEN RECHARGE BASIN
APN 326-140-10, 11, 18 AND 23
CITY OF FRESNO
FRESNO COUNTY, CA

CONSTRUCTION DETAILS 3

EST. 1968
PROVOST & PRITCHARD
CONSULTING GROUP
An Employee Owned Company
705 SOUTH VILLAGE AVENUE
CLOVIS, CALIFORNIA 93611-9166
559/326-1100 FAX 559/326-1090
www.ppcmg.com

DESIGN ENGINEER: RANDY HOPKINS
LICENSE NO: 63538
DRAFTED BY: ---- | CHECKED BY: ----
DATE: 3/13/14
JOB NO: 156112C1

0 1
ORIGINAL SCALE SHOWN IS IN INCHES. ADJUST SCALE FOR REDUCED OR ENLARGED PLANS.

SHEET 29 OF 34

3/13/2014 11:05 AM V:\Clients\Fresno City of-156112C1-Nielsen Recharge Basin\DWG\SHEETS\29 CONSTRUCTION DETAILS 3.dwg -Gabriel Do Rosario

PC-0235

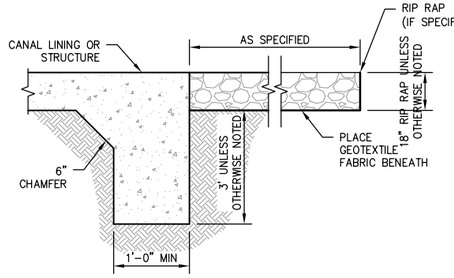

NOTE:
EXCEPT WHERE NOTED OTHERWISE, ALL CANAL LINING CUTOFF WALLS SHALL BE EXCAVATED TO 3 FT BELOW GRADE OR BELOW RIP RAP SUBGRADE WHICHEVER IS DEEPER UNLESS HARDPAN OR CEMENTED SOILS ARE ENCOUNTERED. WHERE HARDPAN OR CEMENTED SOILS ARE ENCOUNTERED, CUTOFF WALL DEPTH MAY BE DECREASED TO A DEPTH OF NO LESS THAN 1 FT BELOW GRADE OR BELOW RIP RAP SUBGRADE, BUT MUST BE APPROVED BY THE ENGINEER AT EACH LOCATION.

STRUCTURE RIP RAP

PC-0106

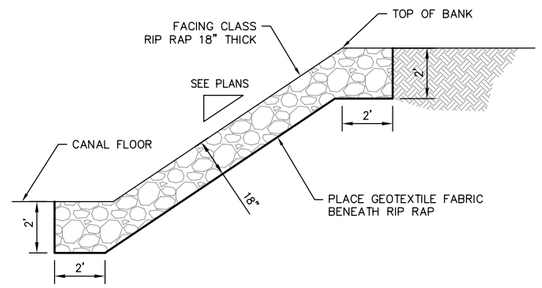

SIDE SLOPE RIP RAP

PC-0703

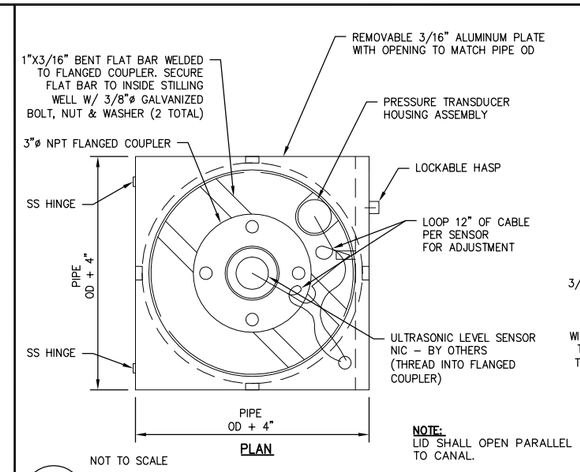

PLAN

NOTE:
LID SHALL OPEN PARALLEL TO CANAL.

NOT TO SCALE

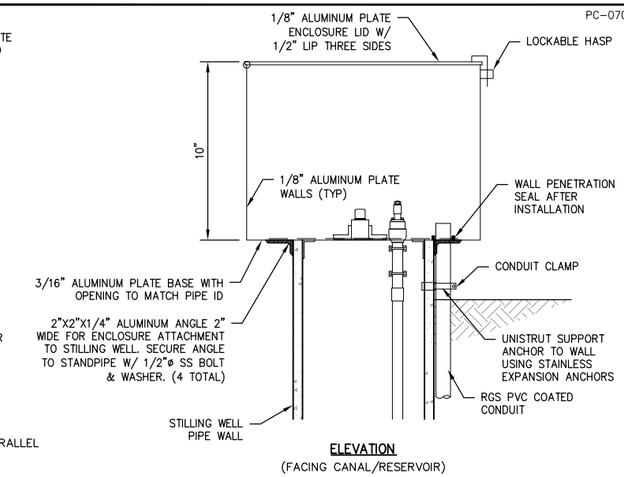

ELEVATION
(FACING CANAL/RESERVOIR)

2/30

STILLING WELL HOUSING

PC-0243

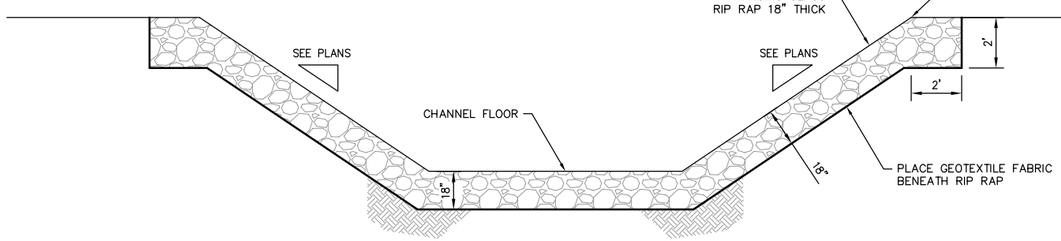

NOT TO SCALE

1/30

FULL CHANNEL RIP RAP

PC-0701

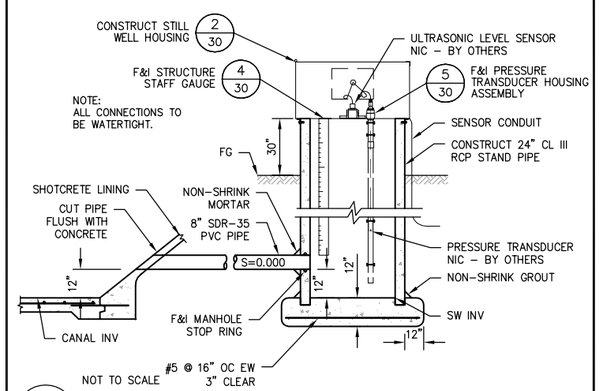

NOT TO SCALE

3/30

BASIN STILLING WELL

WT-0815

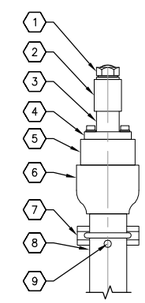

NOTES FOR TRANSMITTER SUPPORT ASSEMBLY

ITEM

1. CORD GRIP, 1/2" NPT WITH REDUCING BUSHING, O-Z CAT No. SR-50-375. DO NOT EXCEED 15 FT-LBS OF TORQUE WHEN CLAMPING SENSOR CABLE.
2. 1 1/4" COUPLING, PVC – FEMALE THREAD.
3. 1 1/4" PVC, SCHDL 40
4. CONDUIT SEALING BUSHING, O-Z CSME-300P.
5. 3" PIPE EXTENSION, THREADED ONE END, SMOOTH FINISH OTHER END.
6. REDUCING FITTING, 3" TO 2".
7. GALVANIZED STEEL U-BOLT AND FITTINGS.
8. 2" PVC, SCHDL 80 PIPE, THREADED
9. VENT HOLE

NOTES: LEVEL TRANSDUCER/TRANSMITTER INSTALLATION

1. FIBERGLASS TYPE 4X ENCLOSURE FOR TERMINATING TRANSDUCER SIGNAL LEADS, PRESSURE/LEVEL TRANSMITTER REFERENCE TUBE WHERE APPLICABLE AND SIGNAL TRANSIENT PROTECTOR. USE SILICA GEL CARTRIDGE TO TERMINATE REFERENCE TUBE. USE ENCLOSURE WITH LEXAN WINDOW FOR INSPECTING CARTRIDGE COLOR. USE HINGED COVER WITH TWO CORNER SCREWS. SIZE PER PHYSICAL REQUIREMENTS.
2. 3/16" STEEL PLATE SUPPORTED BY STILLING WELL. MINIMUM 4 TABS TO SECURE PLATE FROM MOVING.
3. PRESSURE/LEVEL TRANSMITTER SHALL BE GE SENSING MODEL PTX 1230, 2 WIRE, 4–20MA OUTPUT, WITH FACTORY CABLE TO SILICA GEL CARTRIDGE.
4. ULTRASONIC/LEVEL TRANSDUCER SHALL BE AUTOMATION PRODUCTS GROUP MODEL DST-1002, 2 WIRE, 4–20 MA OUTPUT.
5. AFTER INSTALLATION OF PRESSSURE/LEVEL TRANSMITTER AT DEPTH FURNISHED BY ENGINEER, FIELD MEASURE DISTANCE FROM TIP OF SENSOR TO BOTTOM OF STILLING WELL WITH ACCURACY OF 0.1 OF AN INCH AND FURNISH TO ENGINEER.
6. 3/4" COATED STEEL CONDUIT TO UNDERGROUND RUN TO MOTOR CONTROL CENTER FOR PLC ANALOG INPUT OF LEVEL.
7. OZ-GEDNEY TYPE R CABLE SUPPORT, TYPICAL.
8. 2" PVC, SCHEDULE 40 CONDUIT WITH THREADED FITTINGS.
9. THREADED MALE CONNECTOR TO FEMALE SLIP FIT. USE NEOPRENE WASHERS TO TIGHTEN CONNECTION. REST PVC PIPE ON BOTTOM OF STILLING WELL.

NOT TO SCALE

5/30

TRANSMITTER ASSEMBLY

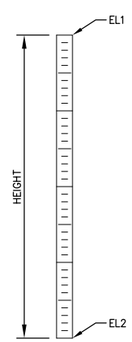

STRUCTURE	HEIGHT	EL1	EL2
RESERVOIR INLET STRUCTURE	10.0'	223.0	213.0
COMETA LATERAL CONTROL STRUCTURE	9.0'	222.0	213.0
RODDEN HIGH LINE CONTROL STRUCTURE	5.8'	221.8	216.0
BURNETT LATERAL CONTROL STRUCTURE	23.0'	223.5	200.5
BURNETT LATERAL MEASURING FLUME STILLING WELL	8.0'	210.7	202.7

NOTE:
EACH STRUCTURE STAFF GAUGE SHALL HAVE A WIDTH OF AT LEAST 2.5 INCHES AND SHOW ELEVATIONS AT LEAST EVERY TENTH OF A FOOT. THE STAFF GAUGE SHALL EXTEND FROM ONE FOOT ABOVE THE BOTTOM OF THE STRUCTURE INV TO THE TOP OF THE NEAREST STRUCTURE OR STILLING WELL WALL. THE CONTRACTOR SHALL SUBMIT MANUFACTURER'S INFORMATION ON THE STAFF GAUGE INCLUDING MATERIAL, MANUFACTURER, THICKNESS, AND FONT SIZES TO THE ENGINEER FOR APPROVAL. STAFF GAUGES SHALL BE GRADUATED AND MOUNTED TO REFLECT TRUE ELEVATION.

4/30

STRUCTURE STAFF GAUGE

SCALE = NTS

COPYRIGHT 2014 by PROVOST & PRITCHARD CONSULTING GROUP, dba PROVOST & PRITCHARD, Inc. Provost & Pritchard Engineering Group, Inc. expressly reserves its common law copyright and other property rights in these plans. These plans are not to be reproduced, changed or copied in any form or manner whatsoever, nor are they to be assigned to any third party without first obtaining the written permission and consent of Provost & Pritchard Engineering Group, Inc. In the event of unauthorized reuse of these plans by third party, the third party shall hold the firm of Provost & Pritchard Engineering Group, Inc. harmless, and shall indemnify the firm of Provost & Pritchard Engineering Group, Inc.'s legal fees associated with defending and enforcing these rights.

No.	REVISION	BY	DATE

PRELIMINARY
NOT FOR CONSTRUCTION
3/13/14

REGISTERED PROFESSIONAL ENGINEER
RANDY S. HOPKINS
No. 63538
Civil
STATE OF CALIFORNIA

DATE SIGNED: _____

NIELSEN RECHARGE BASIN
APN 326-140-10, 11, 18 AND 23
CITY OF FRESNO
FRESNO COUNTY, CA

CONSTRUCTION DETAILS 4

PROVOST & PRITCHARD
CONSULTING GROUP
An Employee Owned Company
550 W. ALLUVIAL AVE.
CLOVIS, CALIFORNIA 93611-9166
559/326-1100 FAX 559/326-1090
www.ppeng.com

DESIGN ENGINEER: RANDY HOPKINS
LICENSE NO: 63538
DRAFTED BY: ----
CHECKED BY: ----
DATE: 3/13/14
JOB NO: 156112C1
0 1
ORIGINAL SCALE SHOWN IS IN INCHES. ADJUST SCALE FOR REDUCED OR ENLARGED PLANS.
SHEET 30 OF 34

3/13/2014 11:05 AM V:\Clients\Fresno City of-1561\156112C1-Nielsen Recharge Basin\DWG\SHEET\30 CONSTRUCTION DETAILS 4.dwg -Gabriel Do Revenoso

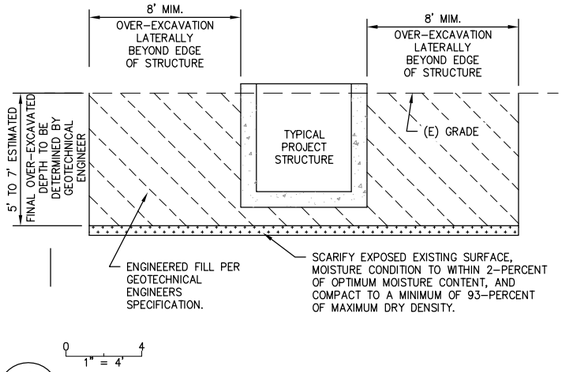

1/31 TYPICAL OVER-EXCAVATION AT STRUCTURES

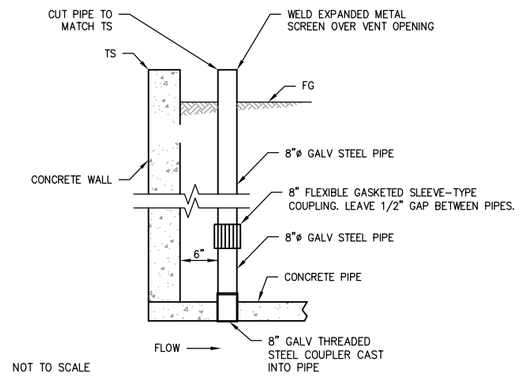

NOT TO SCALE

2/31 AIR VENT

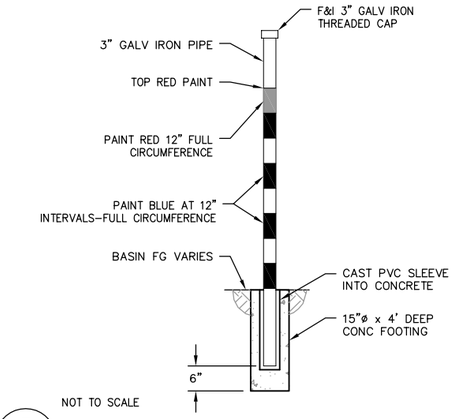

NOT TO SCALE

3/31 BASIN STAFF GAGE

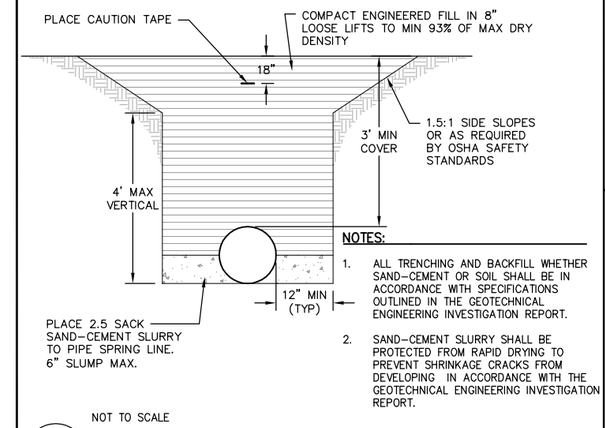

NOTES:

1. ALL TRENCHING AND BACKFILL WHETHER SAND-CEMENT OR SOIL SHALL BE IN ACCORDANCE WITH SPECIFICATIONS OUTLINED IN THE GEOTECHNICAL ENGINEERING INVESTIGATION REPORT.
2. SAND-CEMENT SLURRY SHALL BE PROTECTED FROM RAPID DRYING TO PREVENT SHRINKAGE CRACKS FROM DEVELOPING IN ACCORDANCE WITH THE GEOTECHNICAL ENGINEERING INVESTIGATION REPORT.

NOT TO SCALE

4/31 TYPICAL TRENCH DETAIL

PI-0602

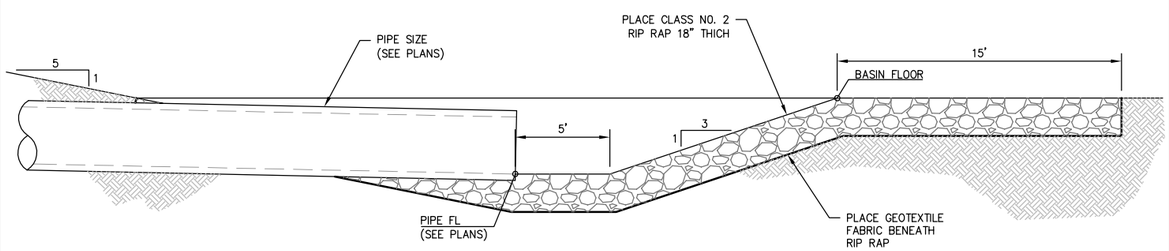

NOT TO SCALE

5/31 BASIN INLET RIP RAP

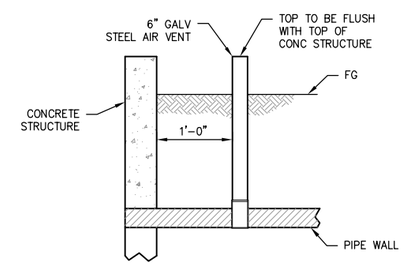

NOT TO SCALE

6/31 PVC PIPE AIR VENT

COPYRIGHT 2014 by PROVOST & PRITCHARD ENGINEERING GROUP, INC. & Pritchard Engineering Group, Inc. expressly reserves its common law copyright and other property rights in these plans. These plans are not to be changed or copied in any form or manner whatsoever, nor are they to be assigned to any third party without first obtaining the written permission and consent of Provost & Pritchard Engineering Group, Inc. In the event of unauthorized reuse of these plans by a third party, the third party shall hold the firm of Provost & Pritchard Engineering Group, Inc. harmless, and shall indemnify the firm of Provost & Pritchard Engineering Group, Inc.'s legal fees associated with defending and enforcing these rights.

No.	REVISION	BY	DATE

PRELIMINARY
NOT FOR CONSTRUCTION
3/13/14

REGISTERED PROFESSIONAL ENGINEER
RANDY S. HOPKINS
No. 63538
Civil
STATE OF CALIFORNIA

DATE SIGNED:

NIELSEN RECHARGE BASIN
APN 326-140-10, 11, 18 AND 23
CITY OF FRESNO
FRESNO COUNTY, CA

CONSTRUCTION DETAILS 5

PROVOST & PRITCHARD
CONSULTING GROUP
An Employee Owned Company
2205 ALLUVIAL AVENUE
CLOVIS, CALIFORNIA 93611-9166
559/326-1100 FAX 559/326-1090
www.ppeng.com

DESIGN ENGINEER: RANDY HOPKINS
LICENSE NO: 63538
DRAFTED BY: ----
CHECKED BY: ----
DATE: 3/13/14
JOB NO: 156112C1
0 1
ORIGINAL SCALE SHOWN IS IN INCHES. ADJUST SCALE FOR REDUCED OR ENLARGED PLANS.

3/13/2014 11:05 AM V:\Clients\Fresno City of-1561\156112C1-Nielsen Recharge Basin\DWG\SHEET\31 CONSTRUCTION DETAILS 5.dwg -Gabriel Do Revosco

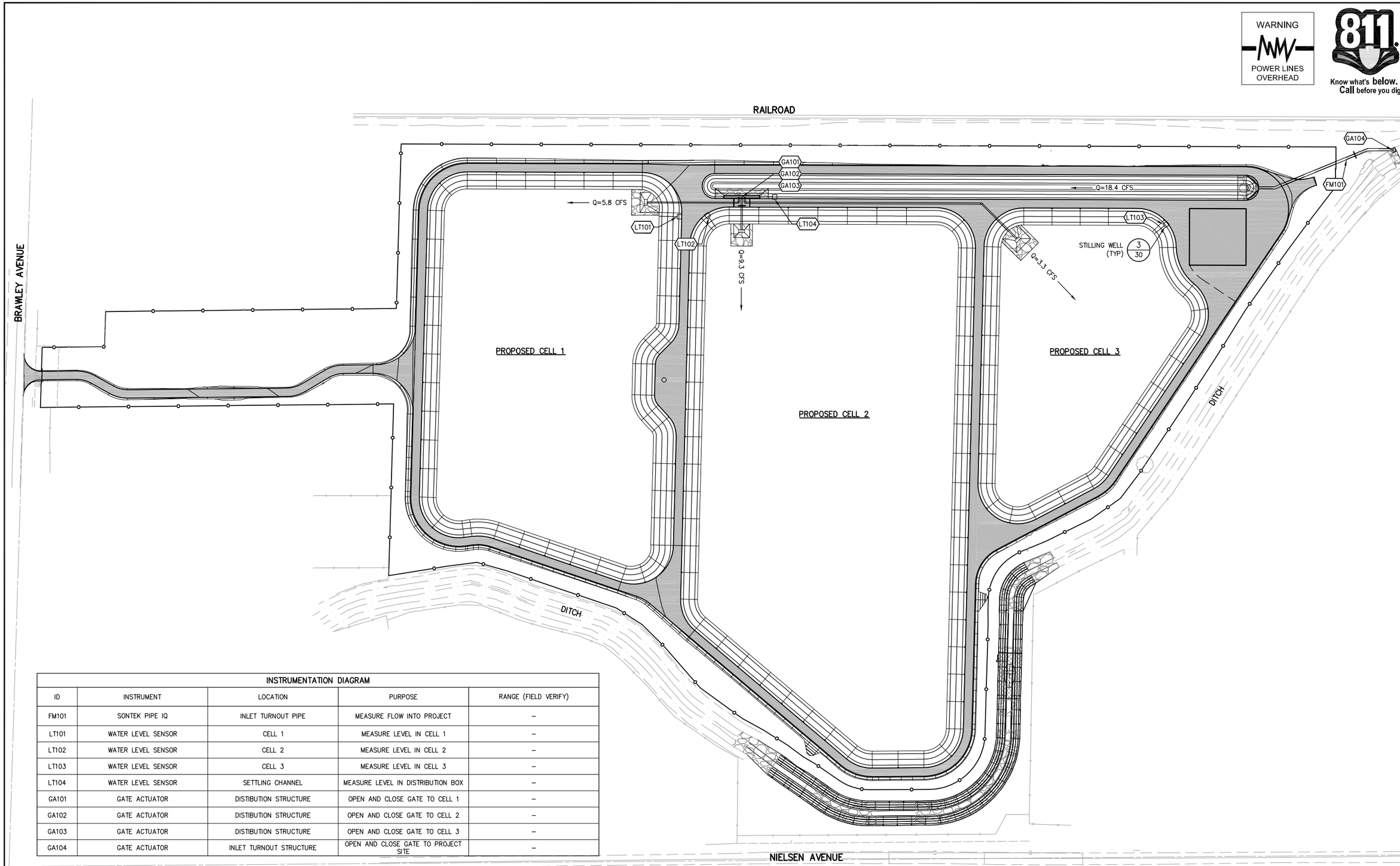

INSTRUMENTATION DIAGRAM				
ID	INSTRUMENT	LOCATION	PURPOSE	RANGE (FIELD VERIFY)
FM101	SONTEK PIPE IQ	INLET TURNOUT PIPE	MEASURE FLOW INTO PROJECT	–
LT101	WATER LEVEL SENSOR	CELL 1	MEASURE LEVEL IN CELL 1	–
LT102	WATER LEVEL SENSOR	CELL 2	MEASURE LEVEL IN CELL 2	–
LT103	WATER LEVEL SENSOR	CELL 3	MEASURE LEVEL IN CELL 3	–
LT104	WATER LEVEL SENSOR	SETTLING CHANNEL	MEASURE LEVEL IN DISTRIBUTION BOX	–
GA101	GATE ACTUATOR	DISTIBUTION STRUCTURE	OPEN AND CLOSE GATE TO CELL 1	–
GA102	GATE ACTUATOR	DISTIBUTION STRUCTURE	OPEN AND CLOSE GATE TO CELL 2	–
GA103	GATE ACTUATOR	DISTIBUTION STRUCTURE	OPEN AND CLOSE GATE TO CELL 3	–
GA104	GATE ACTUATOR	INLET TURNOUT STRUCTURE	OPEN AND CLOSE GATE TO PROJECT SITE	–

SCALE IN FEET
0 40 80 160

COPYRIGHT 2014 by PROVOST & PRITCHARD ENGINEERING GROUP, INC. (PROVOST & PRITCHARD). The firm of Provost & Pritchard Engineering Group, Inc. expressly reserves its common law copyright and other property rights in these plans. These plans are not to be changed or copied in any form or manner whatsoever, nor are they to be assigned to any third party without first obtaining the written permission and consent of Provost & Pritchard Engineering Group, Inc. In the event of unauthorized reuse of these plans by a third party, the third party shall hold the firm of Provost & Pritchard Engineering Group, Inc. harmless, and shall indemnify the firm of Provost & Pritchard Engineering Group, Inc.'s legal fees associated with defending and enforcing these rights.

No.	REVISION	BY	DATE

PRELIMINARY
NOT FOR CONSTRUCTION
3/13/14

REGISTERED PROFESSIONAL ENGINEER
RANDY S. HOPKINS
No. 63538
Civil
STATE OF CALIFORNIA

DATE SIGNED:

NIELSEN RECHARGE BASIN
APN 326-140-10, 11, 18 AND 23
CITY OF FRESNO
FRESNO COUNTY, CA

INSTRUMENTATION DIAGRAM

FST 21661
PROVOST & PRITCHARD
CONSULTING GROUP
An Employee Owned Company
2020 CLOVIS AVENUE
CLOVIS, CALIFORNIA 93611-9166
559/326-1100 FAX 559/326-1090
www.ppeng.com

DESIGN ENGINEER: RANDY HOPKINS
LICENSE NO: 63538
DRAFTED BY: ----
CHECKED BY: ----
DATE: 3/13/14
JOB NO: 156112C1
0 1
ORIGINAL SCALE SHOWN IS IN INCHES. ADJUST SCALE FOR REDUCED OR ENLARGED PLANS.

3/13/2014 11:06 AM V:\Clients\Fresno City of-156\156112C1-Nielsen Recharge Basin\DWG\SHEET\32 INSTRUMENTATION DIAGRAM.dwg -Gabriel Do Revoroso

WARNING
POWER LINES OVERHEAD

811
Know what's **below.**
Call before you dig.

TO BE SUBMITTED AT 90% SUBMITTAL

SCALE IN FEET
0 50 100 200

COPYRIGHT 2014 by PROVOST & PRITCHARD ENGINEERING GROUP, INC. (PROVOST & PRITCHARD ENGINEERING GROUP, Inc.) expressly reserves its common law copyright and other property rights in these plans. These plans are not to be altered or copied in any form or manner whatsoever, nor are they to be assigned to third parties, without first obtaining the written permission and consent of Provost & Pritchard Engineering Group, Inc. In the event of unauthorized reuse of these plans by a third party, the third party shall hold the firm of Provost & Pritchard Engineering Group, Inc. harmless, and shall defend the firm of Provost & Pritchard Engineering Group, Inc.'s legal fees associated with defending and enforcing these rights.

PRELIMINARY
NOT FOR CONSTRUCTION
3/13/14

No.	REVISION	BY	DATE

REGISTERED PROFESSIONAL ENGINEER
RANDY S. HOPKINS
No. 63538
Civil
STATE OF CALIFORNIA

DATE SIGNED: _____

NIELSEN RECHARGE BASIN
APN 326-140-10, 11, 18 AND 23
CITY OF FRESNO
FRESNO COUNTY, CA

ALTERNATIVE 1
ELECTRICAL PLAN 1

FST 21631
PROVOST & PRITCHARD
CONSULTING GROUP
An Employee Owned Company
7200 ROLLINS AVENUE
CLOVIS, CALIFORNIA 93611-9166
559/326-1100 FAX 559/326-1090
www.ppeng.com

DESIGN ENGINEER: RANDY HOPKINS
LICENSE NO: 63538
DRAFTED BY: ----
CHECKED BY: ----
DATE: 3/13/14
JOB NO: 156112C1
0 1
ORIGINAL SCALE SHOWN IS IN INCHES. ADJUST SCALE FOR REDUCED OR ENLARGED PLANS.

3/13/2014 11:06 AM V:\Clients\Fresno City of-1561\156112C1-Nielsen Recharge Basin\DWG\SHEET\33 ELECTRICAL PLAN 1.dwg -Gabriel De Reynoso

WARNING
POWER LINES OVERHEAD

811
Know what's **below.**
Call before you dig.

TO BE SUBMITTED AT 90% SUBMITTAL

SCALE IN FEET
0 50 100 200

COPYRIGHT 2014 by PROVOST & PRITCHARD ENGINEERING GROUP, INC. (PROVOST & PRITCHARD ENGINEERING GROUP, Inc.) expressly reserves its common law copyright and other property rights in these plans. These plans are not to be altered or copied in any form or manner whatsoever, nor are they to be assigned to third parties, without first obtaining the written permission and consent of Provost & Pritchard Engineering Group, Inc. In the event of unauthorized reuse of these plans by a third party, the third party shall hold the firm of Provost & Pritchard Engineering Group, Inc. harmless, and shall defend the firm of Provost & Pritchard Engineering Group, Inc.'s legal fees associated with defending and enforcing these rights.

PRELIMINARY
NOT FOR CONSTRUCTION
3/13/14

No.	REVISION	BY	DATE

REGISTERED PROFESSIONAL ENGINEER
RANDY S. HOPKINS
No. 63538
Civil
STATE OF CALIFORNIA

DATE SIGNED: _____

NIELSEN RECHARGE BASIN
APN 326-140-10, 11, 18 AND 23
CITY OF FRESNO
FRESNO COUNTY, CA

ALTERNATIVE 1
ELECTRICAL PLAN 2

FCC 21631
PROVOST & PRITCHARD
CONSULTING GROUP
An Employee Owned Company
2020 LUWA AVE.
CLOVIS, CALIFORNIA 93611-9166
559/326-1100 FAX 559/326-1090
www.ppeng.com

DESIGN ENGINEER: RANDY HOPKINS
LICENSE NO: 63538
DRAFTED BY: ----
CHECKED BY: ----
DATE: 3/13/14
JOB NO: 156112C1
0 1
ORIGINAL SCALE SHOWN IS IN INCHES. ADJUST SCALE FOR REDUCED OR ENLARGED PLANS.

3/13/2014 11:06 AM V:\Clients\Fresno City of-1561\156112C1-Nielsen Recharge Basin\DWG\SHEET\34 ELECTRICAL PLAN 2.dwg -Gabriel De Reynoso

Attachment 4f

FMFCD / Caltrans Memorandum of Understanding

Transfer of Maintenance and Ownership of Existing Caltrans Basins Along Route 180 to FMFCD
FMFCD Agreement No. XXXX

June 24, 2014

Mr. Garth Fernandez, P.E., PMP
Sr. Transportation Engineer – Project Manager
Program / Project Management
2015 East Shields Avenue, Suite 100
Fresno, Ca 93726

Dear Mr. Fernandez:

MEMORANDUM OF UNDERSTANDING

This is a Memorandum of Understanding ("MOU") between the State of California, Department of Transportation ("Caltrans") and the Fresno Metropolitan Flood Control District ("FMFCD") indicating the desire to transfer maintenance and ownership of three (3) existing Caltrans basins ("Fowler Basin", "Armstrong Basin" and "Briggs Basin") along Route 180 to FMFCD and construct drainage facilities by FMFCD as shown on **Exhibits B-1 and C-1**. Any transfer of basin maintenance and ownership between Caltrans and FMFCD and any construction of drainage facilities by FMFCD are contingent upon FMFCD receiving Proposition 84 Drought Grant funds from the California Department of Water Resources ("DWR"). Caltrans and FMFCD mutually desire to cooperate and jointly participate in the transfer of said basin maintenance and ownership and construction of drainage facilities. This MOU is a guide to the intentions and policies of the parties involved. It is not intended to authorize funding or project effort, nor is it a legally binding contract.

Exhibit A-1 summarizes items to be constructed by FMFCD and the estimated cost share for the respective parties.

Caltrans shall deliver to FMFCD, at no cost to FMFCD, a good and sufficient Director's Deed, properly recorded, for the three (3) Caltrans basins listed as "Fowler Basin", "Armstrong Basin" and "Briggs Basin" on **Exhibits B-1 and C-1**. FMFCD shall release Caltrans from any future costs associated with the ownership, operation and maintenance of the "Fowler Basin", "Armstrong Basin" and "Briggs Basin".

FMFCD shall prepare plans, specifications, and estimates for drainage facilities to be constructed by FMFCD in accordance with FMFCD requirements as shown on **Exhibits B-1 and C-1,** and FMFCD shall allow Caltrans access to the project construction site for the purpose of reviewing construction of facilities. Caltrans concerns relative to the workmanship of said construction shall be coordinated with FMFCD's Engineer. FMFCD shall to notify Caltrans, in writing, not less than ten (10) days prior to awarding a construction contract and within ten (10) days after completion and acceptance of said construction. For a period of three (3) years from date of final payment or completion of its construction contract (whichever is later), FMFCD shall retain or cause to be retained for audit by Caltrans, or other government entities with jurisdiction, all records and accounts relative to drainage facilities constructed by FMFCD pursuant to this MOU. Caltrans shall issue, in a timely fashion and at no cost to FMFCD, the necessary encroachment permits for

construction and operation of FMFCD drainage facilities within Caltrans' right-of-way. FMFCD shall provide Caltrans one good quality set of reproducible "As-built" drawings of all FMFCD facilities constructed by FMFCD within Caltrans' right-of-way pursuant to this MOU.

Upon completion and acceptance by Caltrans and FMFCD of drainage facilities constructed pursuant to this MOU, FMFCD shall accept ownership and control of said facilities and shall maintain them. FMFCD shall execute and comply with the Caltrans encroachment permits for (i) ownership and operation of drainage facilities constructed within Caltrans' right-of-way and (ii) for any construction or maintenance activities which involve FMFCD forces working within Caltrans' right-of-way in the form of **Exhibit D-1**.

FMFCD shall accept surface water runoff from the portion of Freeway 180 identified on **Exhibit B-1**, as long as said portion of Freeway 180 is needed for transportation purposes. Said surface water shall be stored in FMFCD Basin "BQ" with an overflow connection to the "Armstrong Basin". A backflow prevention device shall be installed the "Fowler Basin" and Basin "BQ" to prevent the backflow of water stored in Basin "BQ" to the "Fowler Basin". FMFCD shall endeavor to operate the "Armstrong Basin" at a water storage level below elevation 99.36 meters (326.00 feet) (North American Vertical Datum 1929) and take measures to lower the water level whenever the level exceeds elevation 99.36 meters (326.00 feet).

In the construction of FMFCD's drainage facilities within Caltrans' right-of-way pursuant to this MOU as shown on **Exhibits B-1 and C-1**, FMFCD may (but is not required to), furnish a representative, at no cost to Caltrans, and such representative and the Caltrans Resident Engineer

shall cooperate and consult with each other. Caltrans may (but is not required to), furnish a representative, at no cost to FMFCD, and such representative and FMFCD Engineer shall cooperate and consult with each other. Any future alteration, replacement, enlargement, or maintenance of drainage facilities constructed pursuant to this MOU which are initiated by FMFCD shall be the sole responsibility of FMFCD.

Any notice, demand or request required or permitted hereunder shall be in writing addressed to the receiving party at its address shown on the signature page below, or at such other address as may be designated by such party to the other, and shall be deemed given (i) when personally delivered; (ii) three (3) days after deposit in the United State mail, postage prepaid; (iii) by telecopy with electronic receipt; or (iv) by e-mail with read receipt requested.

In the event of unforeseen circumstances resulting in additional work or a change in character of work with respect to the drainage facilities constructed by FMFCD within Caltrans' right-of-way, FMFCD shall notify Caltrans and request written approval of those changes, which approval shall not be unreasonably withheld.

If any existing public and/or private utility facilities conflict with any aforesaid drainage facility construction, or violate Caltrans' encroachment policy, Caltrans and FMFCD shall make all necessary arrangements with the owners of such facilities for their protection, relocation, or removal, and shall inspect such protection, relocation, or removal of said facilities to ensure that it is properly completed. If there are costs for such protection, relocation, or removal which Caltrans or FMFCD must legally pay, the party paying for the construction which necessitates

such protection, relocation or removal shall bear the cost of said protection, relocation, or removal, plus costs of engineering overhead and inspection. If any protection, relocation, or removal of facilities is required, such work shall be performed in accordance with Caltrans' policy and procedure for those facilities located within the Caltrans' right-of-way, and in accordance with FMFCD policy for those facilities located outside Caltrans' right-of-way.

Sincerely,

_____ Date:_____

BOB VAN WYK
General Manager-Secretary
Fresno Metropolitan Flood Control District
5469 East Olive Avenue
Fresno, CA 93727
Phone: (559) 456-3292
Fax: (559) 456-3194
bobv@fresnofloodcontrol.org

I Concur:

_____ Date:_____

GARTH FERNANDEZ
Sr. Transportation Engineer – Project Manager
Program / Project Management
2015 East Shields Avenue, Suite 100
Fresno, CA 93726
Phone: (559) 243-8012
Fax: (559) 243-3426
garth.fernandez@dot.ca.gov

EXHIBIT A-1

Estimated Construction Costs and Proportionate Share of Items Constructed by FMFCD

EXHIBIT	Description	Quantity	Unit Cost	Estimate of FMFCD's Constrction Cost and Proportionate Share		Estimate of Caltrans's Construction Cost and Proportionate Share		Estimated Item Total
B-1	Pump Station Facilities	1 EA	$500,000 /EA	$500,000	100%	$0	0%	$500,000
	PG&E Rule 16 Fee	1 EA	$15,000 /EA	$15,000	100%	$0	0%	$15,000
	PG&E Rule 16 Facilities	1 EA	$20,000 /EA	$20,000	100%	$0	0%	$20,000
	18" RCP Class III	130 LF	$60 /LF	$7,800	100%	$0	0%	$7,800
	24" RCP Class III	517 LF	$70 /LF	$36,190	100%	$0	0%	$36,190
	36" RCP Class III	101 LF	$90 /LF	$9,090	100%	$0	0%	$9,090
	Type "A" Case I Manhole	4 EA	$3,500 /EA	$14,000	100%	$0	0%	$14,000
	Outfall Structure	2 EA	$8,500 /EA	$17,000	100%	$0	0%	$17,000
	Basin Excavation	20000 CY	$5 /CY	$100,000	100%	$0	0%	$100,000
	Remove/Replace Irrigation	1 EA	$10,000 /EA	$10,000	100%	$0	0%	$10,000
	18" Tideflex Valve	1 EA	$5,000 /EA	$5,000	100%	$0	0%	$5,000
	24" Tideflex Valve	1 EA	$6,000 /EA	$6,000	100%	$0	0%	$6,000
	Raise Overflow and Gate	1 LS	$5,000 /LS	$5,000	100%	$0	0%	$5,000
	Trench Resurfacing	405 LF	$40 /LF	$16,200	100%	$0	0%	$16,200
	Traffic Control	1 LS	$5,000 /LS	$5,000	100%	$0	0%	$5,000
	Dust Control	1 LS	$500 /LS	$500	100%	$0	0%	$500
	Worker Protection	1 LS	$2,000 /LS	$2,000	100%	$0	0%	$2,000
	Miscellaneous Facilities	1 LS	$41,220 /LS	$41,220	100%	$0	0%	$41,220
C-1								
	Pump Station Facilities	2 EA	$500,000 /EA	$1,000,000	100%	$0	0%	$1,000,000
	PG&E Rule 16 Fee	1 EA	$35,000 /EA	$35,000	100%	$0	0%	$35,000
	PG&E Rule 16 Facilities	1 EA	$50,000 /EA	$50,000	100%	$0	0%	$50,000
	24" RCP Class III	926 LF	$70 /LF	$64,820	100%	$0	0%	$64,820
	24" RCP Class III	510 LF	$100 /LF	$51,000	100%	$0	0%	$51,000
	Type "A" Case I Manhole	4 EA	$3,500 /EA	$14,000	100%	$0	0%	$14,000
	Outfall Structure	1 EA	$8,500 /EA	$8,500	100%	$0	0%	$8,500
	Basin Excavation	4000 CY	$5 /CY	$20,000	100%	$0	0%	$20,000
	Private Drive Repaving	173 TN	$100 /TN	$17,300	100%	$0	0%	$17,300
	Recharge Diversion Structure	1 EA	$75,000 /EA	$75,000	100%	$0	0%	$75,000
	Magnetic Flow Meter	2 EA	$25,000 /EA	$50,000	100%	$0	0%	$50,000
	Dust Control	1 LS	$1,000 /LS	$1,000	100%	$0	0%	$1,000
	Worker Protection	1 LS	$4,000 /LS	$4,000	100%	$0	0%	$4,000
	Miscellaneous Facilities	1 LS	$79,380 /LS	$79,380	100%	$0	0%	$79,380
	Total			$2,280,000		$0		$2,280,000

LEGEND

NOTE:
THIS DRAWING IS SCHEMATIC,
DISTANCES ARE APPROXIMATE.

- 24" Proposed Storm Drain to be constructed with Grant funding to transfer and serve Caltrans Storm drain system (Shown in Yellow) to FMFCD Basin "BQ"
- 42" Existing Caltrans Private Storm Drain Pipeline tied to the "Fowler Basin"
- Existing Freeway 180 Area (25.6 Acres ±) currently being served by "Fowler Basin" and "Armstrong Basin" to be shifted through Grant improvements to be served by FMFCD Basin "BQ" with continued overflow protection to the "Armstrong Basin".
- Existing Caltrans "Fowler Basin" to be deeded to FMFCD by Caltrans.
- Backflow Preventer device to insure drainage does not back up onto the Caltrans Freeway 180 from Basin "BQ". Backflow device to be installed through Grant funding.
- Existing FMFCD Basin "BQ"
- Proposed Basin "BQ" Pump Station to be installed with Grant funding
- 18" Proposed FMFCD Master Plan Facilities to be installed with Grant funding
- 18" Proposed FMFCD Master Plan Facilities
- 18" Existing FMFCD Master Plan Facilities

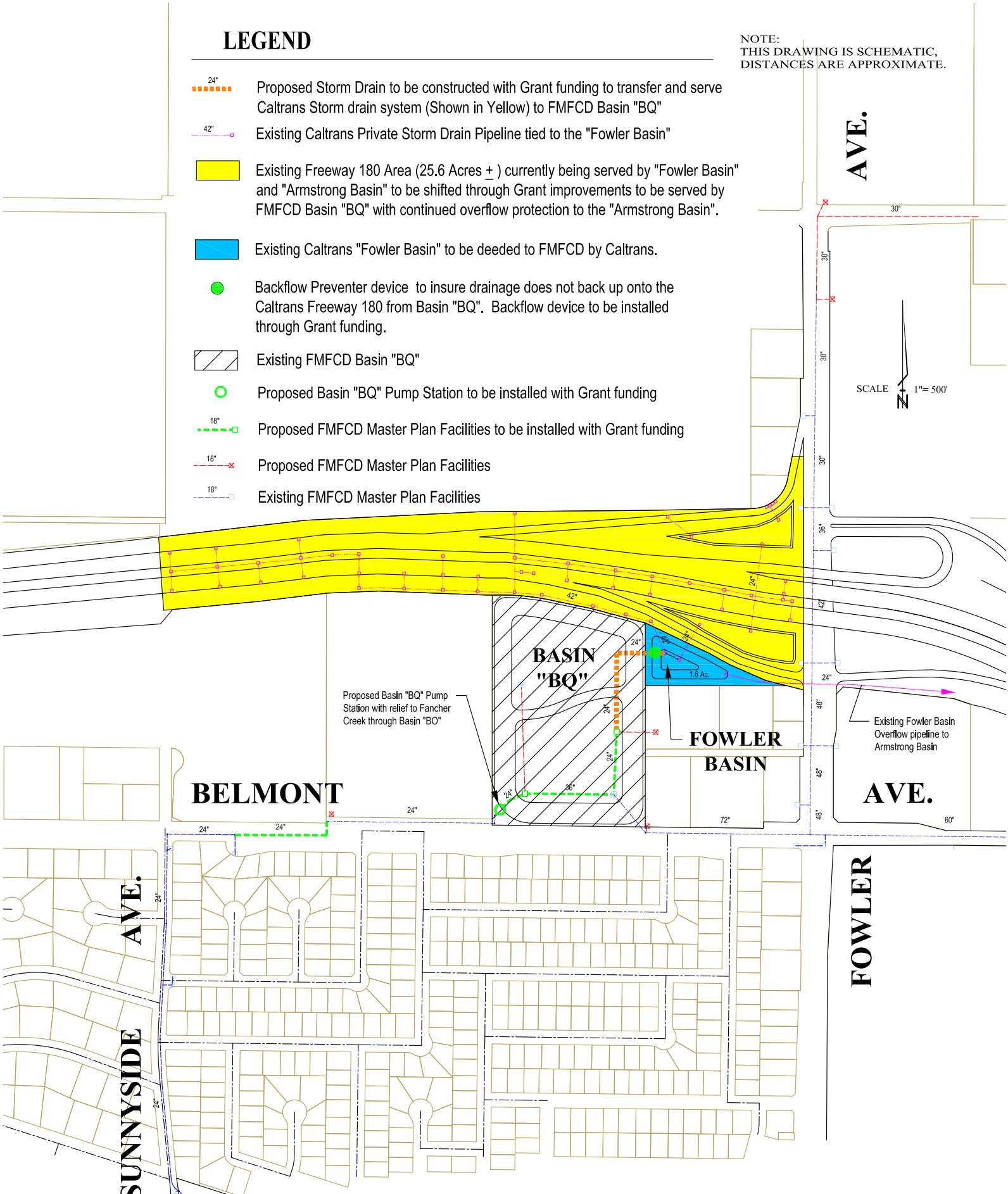

REGIONAL GROUNDWATER RECHARGE & SURFACE WATER REUSE PROJECT

BASIN "BO"

EXHIBIT B-1

FRESNO METROPOLITAN FLOOD CONTROL DISTRICT

K:\Master Planning & Special Projects\Basin & H&H Studies\DV\Special Study\Misc. Studies\DV-1 Briggs Basin\Armstrong-Briggs Basin Intertie for Grant 4-18-2014.dwg

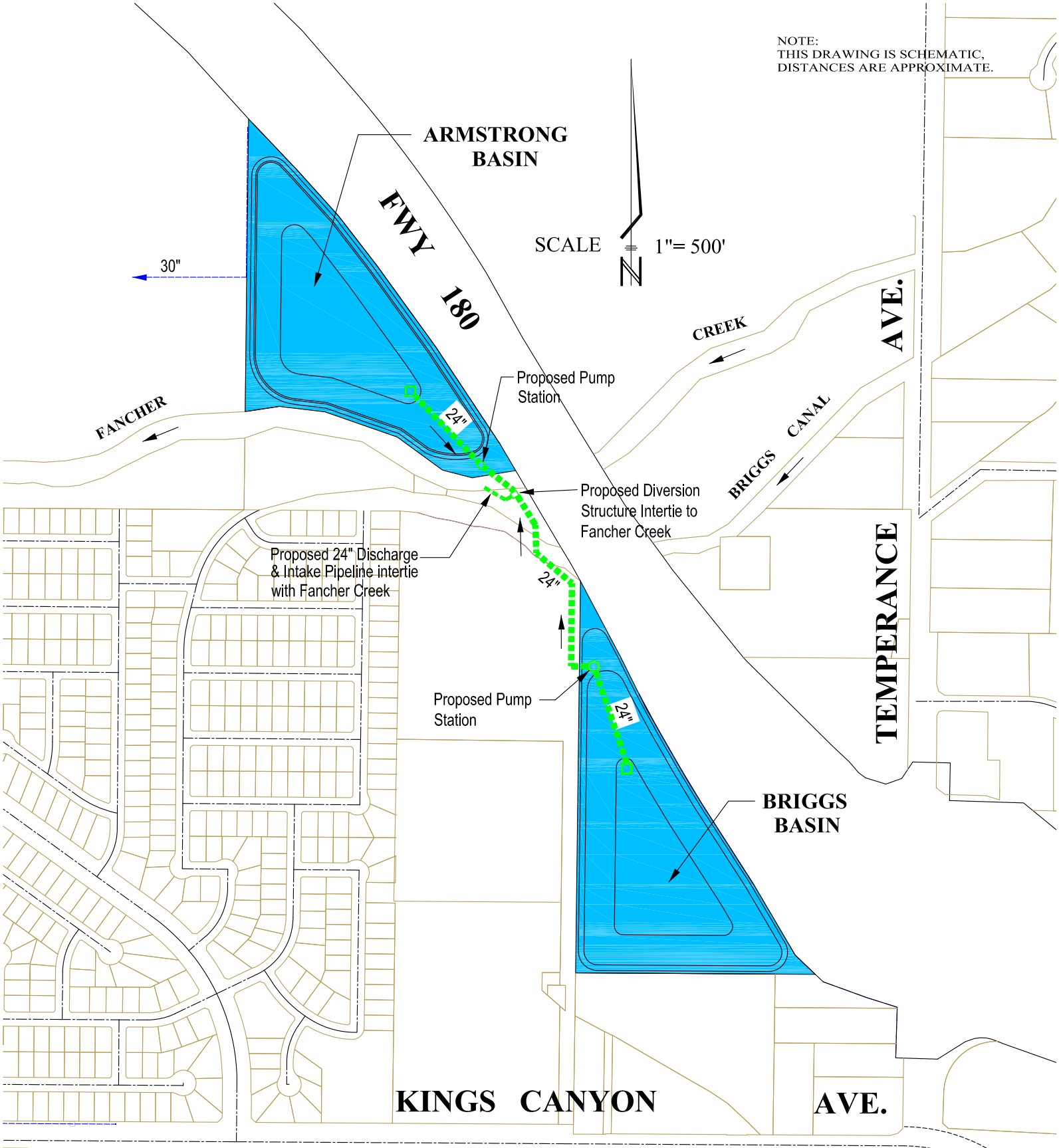

LEGEND

Proposed Basin Outfall Structure, Pump Station and Basin connector pipeline to be constucted with Grant funding

Existing Caltrans Basin Sites to be deeded to FMFCD by Caltrans

REGIONAL GROUNDWATER RECHARGE & SURFACE WATER REUSE PROJECT

EXHIBIT C-1

FRESNO METROPOLITAN FLOOD CONTROL DISTRICT

K:\Master Planning & Special Projects\Basin & H&H Studies\DV\Special Study\Misc. Studies\DV-1 Briggs Basin\Armstrong-Briggs Basin Intertie for Grant 4-18-2014.dwg

DRAWN BY: —

DATE: 4/18/14

STATE OF CALIFORNIA • DEPARTMENT OF TRANSPORTATION

STANDARD ENCROACHMENT PERMIT APPLICATION

TR-0100 (REV. 07/2007)

Permission is requested to encroach on the State Highway right-of-way as follows:
(Complete all BOXES [write N/A if not applicable])
This application is not complete until all requirements have been approved.

FOR CALTRANS USE
PERMIT NO.
DIST/CO/RTE/PM
SIMPLEX STAMP
DATE OF SIMPLEX STAMP

1. COUNTY	2. ROUTE	3. POSTMILE

4. ADDRESS OR STREET NAME	5. CITY

6. CROSS STREET *(Distance and direction from site)*	7. PORTION OF RIGHT-OF-WAY

8. WORK TO BE PERFORMED BY	9. EST. START DATE	10. EST. COMPLETION DATE
☐ OWN FORCES ☐ CONTRACTOR		

11. EXCAVATION	MAX. DEPTH	AVG. DEPTH	AVG. WIDTH	LENGTH	SURFACE TYPE

12. EST. COST IN STATE HIGHWAY RIGHT-OF-WAY	FUNDING SOURCE(S) ☐ FEDERAL ☐ STATE ☐ LOCAL ☐ PRIVATE

13. PIPES	PRODUCT TYPE	DIAMETER	VOLTAGE / PSIG	14. CALTRANS PROJECT E.A. NUMBER

15. ☐ **Double Permit** **Parent Permit Number** _____

Applicant's Reference Number / Utility Work Order Number _____

16. Have your plans been reviewed by another Caltrans branch? ☐ **NO** ☐ **YES** (If "YES") **Who?**_____

17. Completely describe work to be done within STATE highway right-of-way :

Attach 6 complete sets of **FOLDED** plans (folded 8.5" x 11"), and any applicable specifications, calculations, maps, etc.
All dimensions shall be in U.S. Customary (English) Units.

18. Is a city, county, or other agency involved in the approval of this project?

☐ YES ***(If "YES", check type of project and attach environmental documentation and conditions of approval.)***

☐ COMMERCIAL DEVELOPMENT ☐ BUILDING ☐ GRADING ☐ OTHER_____

☐ CATEGORICALLY EXEMPT ☐ NEGATIVE DECLARATION ☐ ENVIRONMENTAL IMPACT REPORT ☐ OTHER_____

☐ NO ***(If "NO", please check the category below which best describes the project, and complete page 4 of this application.)***

☐ DRIVEWAY OR ROAD APPROACH, RECONSTRUCTION, MAINTENANCE, OR RESURFACING
☐ PUBLIC UTILITY MODIFICATIONS, EXTENSIONS, HOOKUPS
☐ FLAGS, SIGNS, BANNERS, DECORATIONS, PARADES AND CELEBRATIONS
☐ OTHER_____
☐ FENCE
☐ MAILBOX
☐ EROSION CONTROL
☐ LANDSCAPING

19. Will this project cause a substantial change in the significance of a historical resource (45 years or older), or cultural resource? ☐ YES ☐ NO
(If "YES", provide a description)

20. Is this project on an existing highway or street where the activity involves removal of a scenic resource including a significant tree or stand of trees, a rock outcropping or a historic building? ☐ YES ☐ NO (If "YES", provide a description)

21. Is work being done on applicant's property? ☐ YES ☐ NO (If "YES", attach site and grading plans.)

ADA NOTICE: For individuals with sensory disabilities, this document is available in alternate formats. For information call (916) 654-6410 or TDD (916) 654-3880 or write to Records and Forms Management, 1120 N Street, MS-89, Sacramento, CA 95814

STANDARD ENCROACHMENT PERMIT APPLICATION

TR-0100 (REV. 07/2007)

PERMIT NO.

22. Will this proposed project require the disturbance of soil? ☐ YES ☐ NO

If "YES", estimate the area within State Highway right-of-way in square feet AND acres: _____ (ft^2) AND _____ (acres)

estimate the area outside of State Highway right-of-way in square feet AND acres: _____ (ft^2) AND _____ (acres)

23. Will this proposed project require dewatering? ☐ YES ☐ NO

If "YES", estimate total gallons AND gallons/month._____(gallons) AND _____(gallons/month)

SOURCE*: ☐ STORM WATER ☐ NON-STORM WATER

(*See Caltrans SWMP for definitions of non-storm water discharge: http://www.dot.ca.gov/hq/env/stormwater/index.htm)

24. How will any storm water or ground water be disposed of from within or near the limits of this proposed project?

☐ Storm Drain System ☐ Combined Sewer / Storm System ☐ Storm Water Retention Basin

☐ Other (explain): _____

PLEASE READ THE FOLLOWING CLAUSES PRIOR TO SIGNING THIS ENCROACHMENT PERMIT APPLICATION.

The applicant, understands and herein agrees to that an encroachment permit can be denied, and/or a bond required for non-payment of prior or present encroachment permit fees. Encroachment Permit fees may still be due when an application is withdrawn or denied, and that a denial may be appealed, in accordance with the California Streets and Highways Code, Section 671.5. All work shall be done in accordance with Caltrans rules and regulations subject to inspection and approval.

The applicant, understands and herein agrees to the general provisions, special provisions and conditions of the encroachment permit, and to indemnify and hold harmless the State, its officers, directors, agents, employees and each of them (Indemnitees) from and against any and all claims, demands, causes of action, damages, costs, expenses, actual attorneys' fees, judgments, losses and liabilities of every kind and nature whatsoever (Claims) arising out of or in connection with the issuance and/or use of this encroachment permit and the placement and subsequent operation and maintenance of said encroachment for: 1) bodily injury and/or death to persons including but not limited to the Applicant, the State and its officers, directors, agents and employees, the Indemnities, and the public; and 2) damage to property of anyone. Except as provided by law, the indemnification provisions stated above shall apply regardless of the existence or degree of fault of Indemnities. The Applicant, however, shall not be obligated to indemnify Indemnities for Claims arising from the sole negligence and willful misconduct of State, its officers, directors, agents or employees.

DISCHARGES OF STORM WATER AND NON-STORM WATER: Work within State Highway right-of-way shall be conducted in compliance with all applicable requirements of the National Pollutant Discharge Elimination System (NPDES) permit issued to the Department of Transportation (Department), to govern the discharge of storm water and non-storm water from its properties. Work shall also be in compliance with all other applicable Federal, State and Local laws and regulations, and with the Department's Encroachment Permits Manual and encroachment permit. Compliance with the Departments NPDES permit requires amongst other things, the preparation and submission of a Storm Water Pollution Protection Plan (SWPPP), or a Water Pollution Control Program (WPCP), and the approval of same by the appropriate reviewing authority prior to the start of any work. Information on the requirements may also be reviewed on the Department's Construction Website at:

http://www.dot.ca.gov/hq/construc/stormwater/stormwater1.htm

25. NAME of APPLICANT or ORGANIZATION *(Print or Type)*	E-MAIL ADDRESS
ADDRESS of APPLICANT or ORGANIZATION WHERE PERMIT IS TO BE MAILED *(Include City and Zip Code)*	
PHONE NUMBER	FAX NUMBER

26. NAME of AUTHORIZED AGENT / ENGINEER *(Print or Type)*	**IS LETTER OF AUTHORIZATION ATTACHED?** ☐ **YES** ☐ **NO**	E-MAIL ADDRESS
ADDRESS of AUTHORIZED AGENT / ENGINEER *(Include City and Zip Code)*		
PHONE NUMBER	FAX NUMBER	

27. SIGNATURE of APPLICANT or AUTHORIZED AGENT	**28. PRINT OR TYPE NAME**	**29. TITLE**	**30. DATE**

PERMIT NO.
WORK ORDER/REFERENCE NUMBER

FEE CALCULATION -- FOR CALTRANS USE

☐ CASH ☐ CREDIT CARD NAME ON CARD _____ PHONE NUMBER _____

☐ CHECK NUMBER _____ NAME ON CHECK _____ PHONE NUMBER _____

☐ EXEMPT ☐ PROJECT EA __ __ __ __ __ __ ☐ DEFERRED BILLING (Utility)

CALCULATED BY	(1)		(2)		
REVIEW 1. _____ HOURS @ $_____ * 2. _____ HOURS @ $_____ *	1. FEE / DEPOSIT $_____	DATE	2. FEE / DEPOSIT $_____	DATE	TOTAL FEE / DEPOSIT $_____ $_____
INSPECTION 1. _____ HOURS @ $_____ * 2. _____ HOURS @ $_____ *	1. FEE / DEPOSIT $_____	DATE	2. FEE / DEPOSIT $_____	DATE	TOTAL FEE / DEPOSIT $_____ $_____
FIELD WORK _____ HOURS @ $_____ *	$_____		$_____		$_____
EQUIPMENT & MATERIALS	DEPOSIT $_____	DATE	DEPOSIT $_____	DATE	DEPOSIT $_____
CASH DEPOSIT IN LIEU OF BOND	$_____		$_____		$_____
TOTAL COLLECTED **CASHIER'S INITIALS**	$_____ _____		$_____ _____		$_____

** The current hourly rate is set annually by Headquarters Accounting. District Office staff do not have authority to modify this rate.*

PERFORMANCE BOND ☐	DATE	AMOUNT $
PAYMENT BOND ☐	DATE	AMOUNT $
LIABILITY INSURANCE REQUIRED?	☐ YES ☐ NO	AMOUNT $

PERMIT NO.

INSTRUCTIONS
for completing page 4

This page needs to be completed when the proposed project DOES NOT involve a City, County or other public agency.

Your answers to these questions will assist departmental staff in identifying any physical, biological, social or economic resources that may be affected by your proposed project within the State highway right-of-way. And, to determine which type of environmental studies may be required to approve your application for an encroachment permit.

It is the applicant's responsibility for the production of all required environmental documentation and supporting studies, in some cases this may be costly and time-consuming. If possible, attach photographs of the location of the proposed project.

Please answer these questions to the best of your ability. Provide a description of any "YES" answers (type, name, number, etc.)

1. **Will any existing vegetation and/or landscaping within the highway right-of-way be disturbed?**
2. **Are there waterways (e.g. river, creek, pond, natural pool or dry streambed) adjacent to or within the limits of the project or highway right-of-way?**
3. **Is the proposed project located within five miles of the coast line?**
4. **Will the proposed project generate construction noise levels greater than 86 dBA (e.g. jack-hammering, pile driving)?**
5. **Will the proposed project incorporate land from a public park, recreation area or wildlife refuge open to the public?**
6. **Are there any recreational trails or paths within the limits of the proposed project or highway right-of-way?**
7. **Will the proposed project impact any structures, buildings, rail lines, or bridges within highway right-of-way?**
8. **Will the proposed project impact access to any businesses or residences?**
9. **Will the proposed project impact any existing public utilities or public services?**
10. **Will the proposed project impact existing pedestrian facilities, such as sidewalks, crosswalks, or overcrossings?**
11. **Will new lighting be constructed within or adjacent to highway right-of-way?**

Attachment 4g

FMFCD Schematic Plans

LEGEND

NOTE:
THIS DRAWING IS SCHEMATIC,
DISTANCES ARE APPROXIMATE.

- 18" Proposed Storm Drain to be constructed with Grant funding that permenantly ties Cal-Trans Storm drain system (Shown in Yellow) to FMFCD Basin "BQ"
- 42" Existing Cal-Trans Private Storm Drain Pipeline tied to the Fowler Basin
- Existing Freeway 180 Area (25.6 Acres ±) currently being served by Fowler Basin to be shifted through Grant improvements to be served by FMFCD Basin "BQ"
- Existing Cal-Trans Fowler Basin Site to be Operated by FMFCD through Agreement. Berm between Basins to be removed with Grant funding and will provide additional 8.0 Acre-Feet of Recharge capabilities to Basin "BQ" at Elev 325.00.
- Storm Drain Backflow Preventer device to insure drainage does not back up onto the Cal-Trans Fwy 180 system when Basin "BQ" is at Elev. 329.40. Backflow devices to be installed through Grant funding.
- Existing FMFCD Basin "BQ"
- Proposed Basin "BQ" Pump Station to be installed with Grant funding
- 18" Proposed FMFCD Master Plan Facilities to be installed with Grant funding
- 18" Proposed FMFCD Master Plan Facilities
- 18" Existing FMFCD Master Plan Facilities

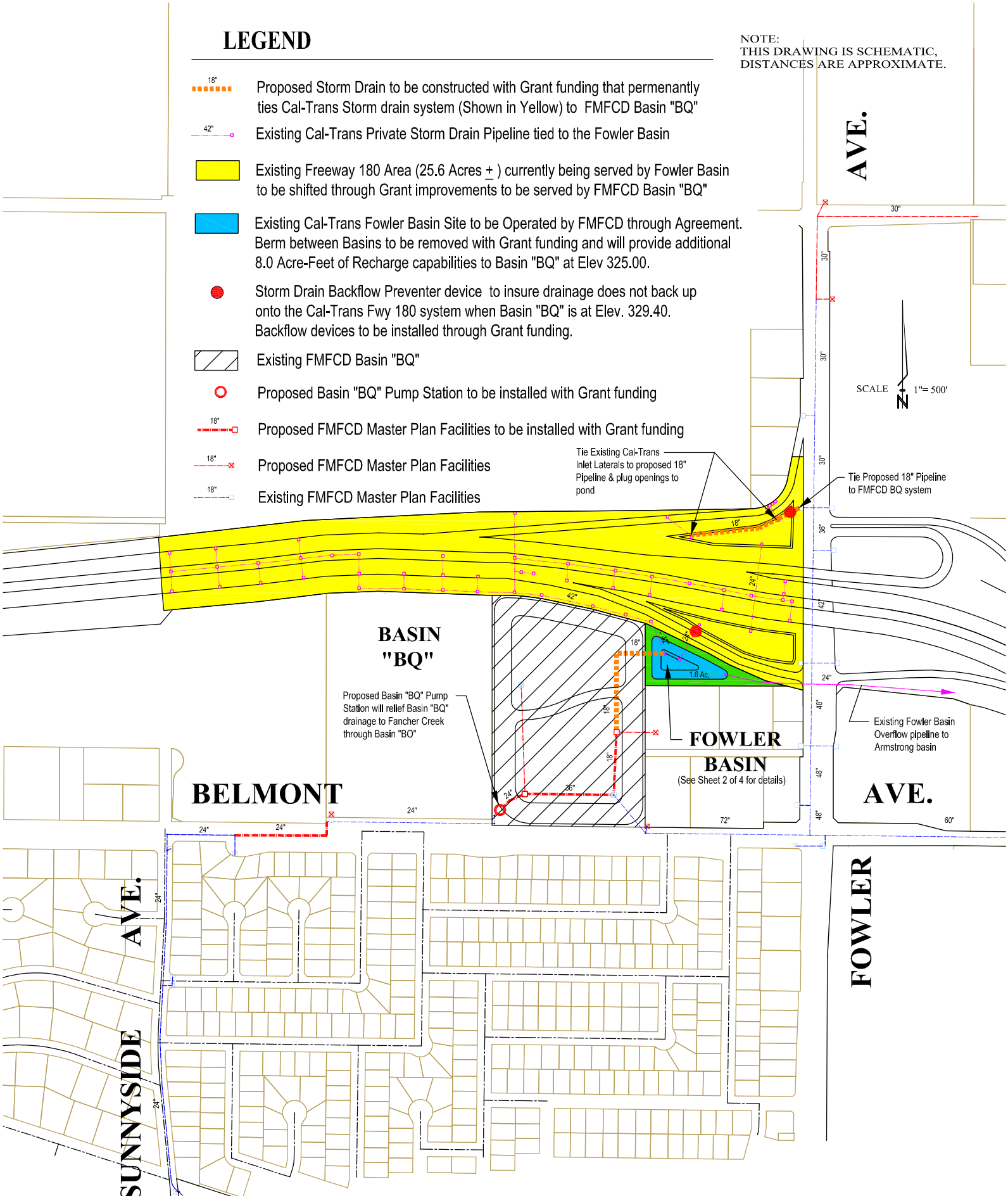

REGIONAL GROUNDWATER RECHARGE & SURFACE WATER RECYCLING PROJECT

SHEET 1 OF 3

FRESNO METROPOLITAN FLOOD CONTROL DISTRICT

K:\Master Planning & Special Projects\Basin & H&H Studies\DV\Special Study\Misc. Studies\DV-1 Briggs Basin\Armstrong-Briggs Basin Intertie for Grant 4-18-2014.dwg

LEGEND

NOTE:
THIS DRAWING IS SCHEMATIC,
DISTANCES ARE APPROXIMATE.

Proposed Area of Excavation between Basin "BQ" & Fowler Basin to merge both basins together into one. Increases Basin "BQ" Recharge Capacity by 8.0 Acre-Feet at Elev. 325.00. Excavation and fence relocation to be funded by Grant.

18" Proposed Basin Connector pipeline to be funded by Grant

Proposed FMFCD Master Plan Facilities to be installed with Grant funding

Proposed FMFCD Master Plan Facilities

Existing FMFCD Master Plan Facilities

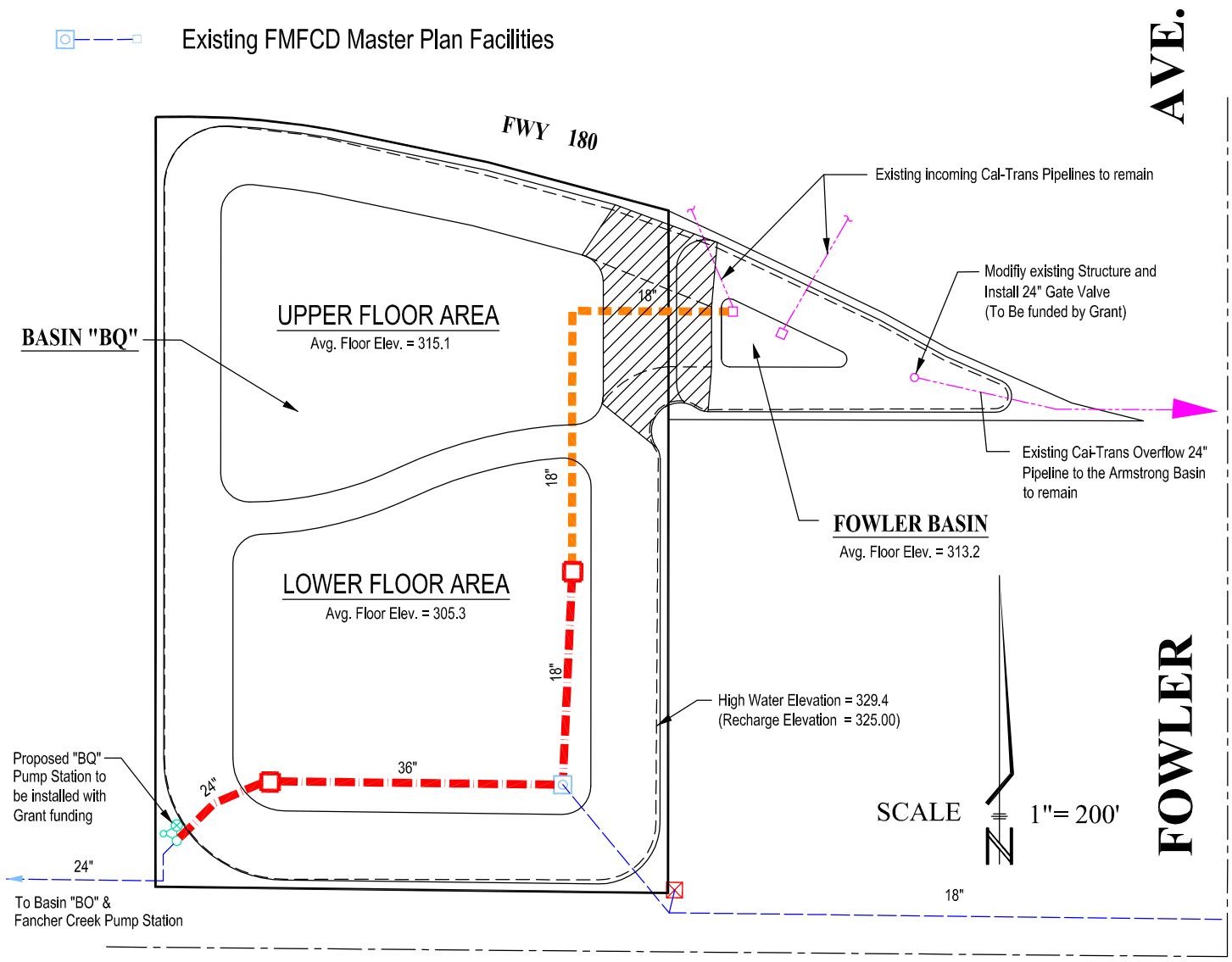

BASIN "BQ" & FOWLER BASIN
CONNECTION DETAIL PLAN

REGIONAL GROUNDWATER RECHARGE & SURFACE WATER RECYCLING PROJECT

SHEET 2 OF 3

FRESNO METROPOLITAN FLOOD CONTROL DISTRICT

DRAWN BY: — DATE: 4/18/14

NOTE:
THIS MAP IS SCHEMATIC
DISTANCES ARE APPROXIMATE.

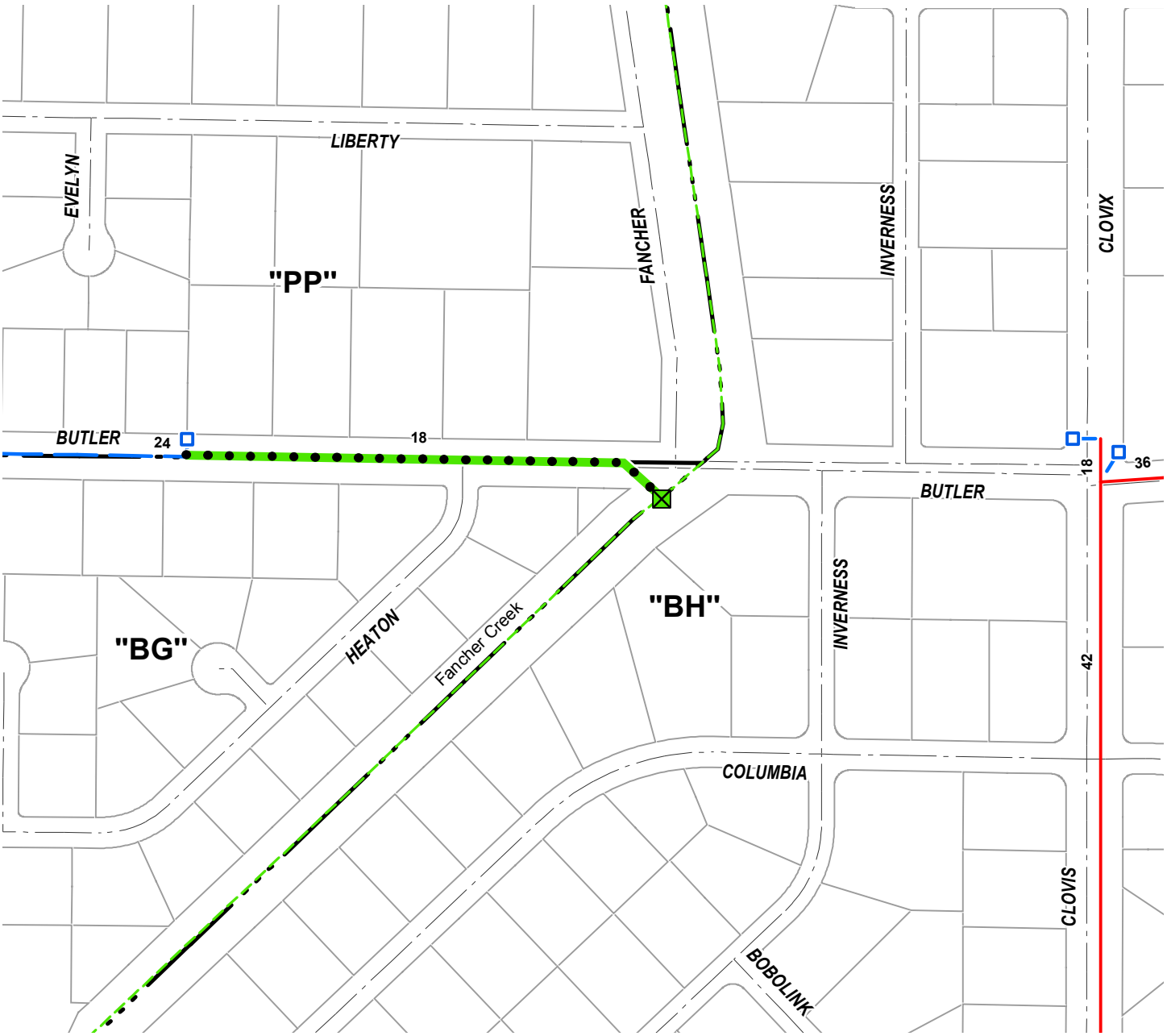

LEGEND

- Pipeline & Recharge Intertie To Be Constructed
- Existing Master Plan Facilities
- Future Master Plan Facilities
- FID Facilities
- Drainage Area Boundary

N

1 " = 300 '

BASIN "PP"
RECHARGE INTERTIE

FRESNO METROPOLITAN FLOOD CONTROL DISTRICT

Prepared by: keithr
Date: 4/23/2014
Path: K:\Autocad\DWGS\0EXHIBIT\GRANTS\PROP 84\Basin PP Intertie.mxd

NOTE:
THIS MAP IS SCHEMATIC
DISTANCES ARE APPROXIMATE.

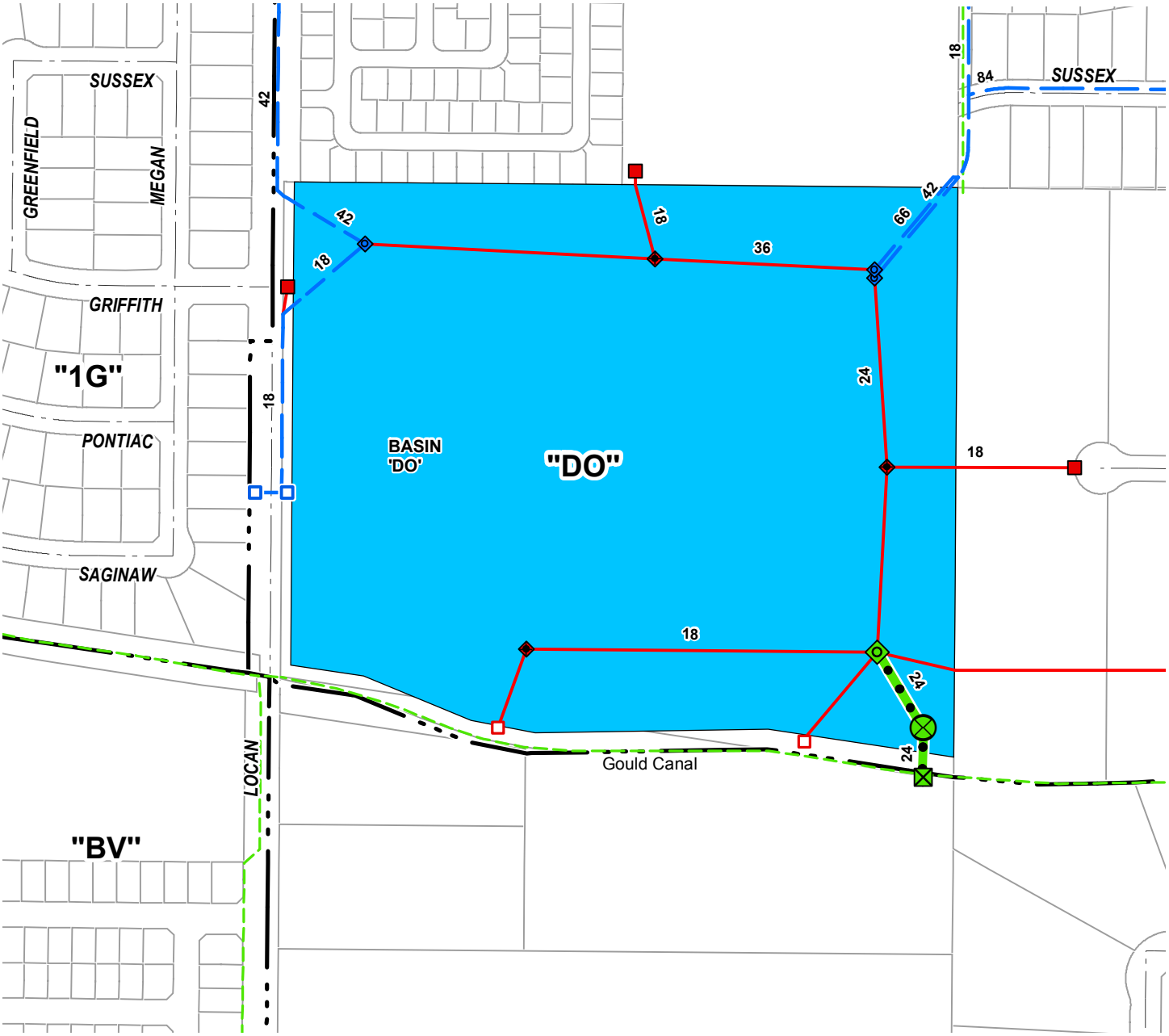

LEGEND

- Recharge Intertie, Pump Stands, Outfall & Pipe To Be Constructed
- Existing Master Plan Facilities
- Future Master Plan Facilities
- FID Facilities
- Drainage Area Boundary

N

1 " = 300 '

BASIN "DO"
RECHARGE INTERTIE

FRESNO METROPOLITAN FLOOD CONTROL DISTRICT

Prepared by: keithr
Date: 4/23/2014
Path: K:\Autocad\DWGS\0EXHIBIT\GRANTS\PROP 84\Basin DO Intertie.mxd

NOTE:
THIS MAP IS SCHEMATIC
DISTANCES ARE APPROXIMATE.

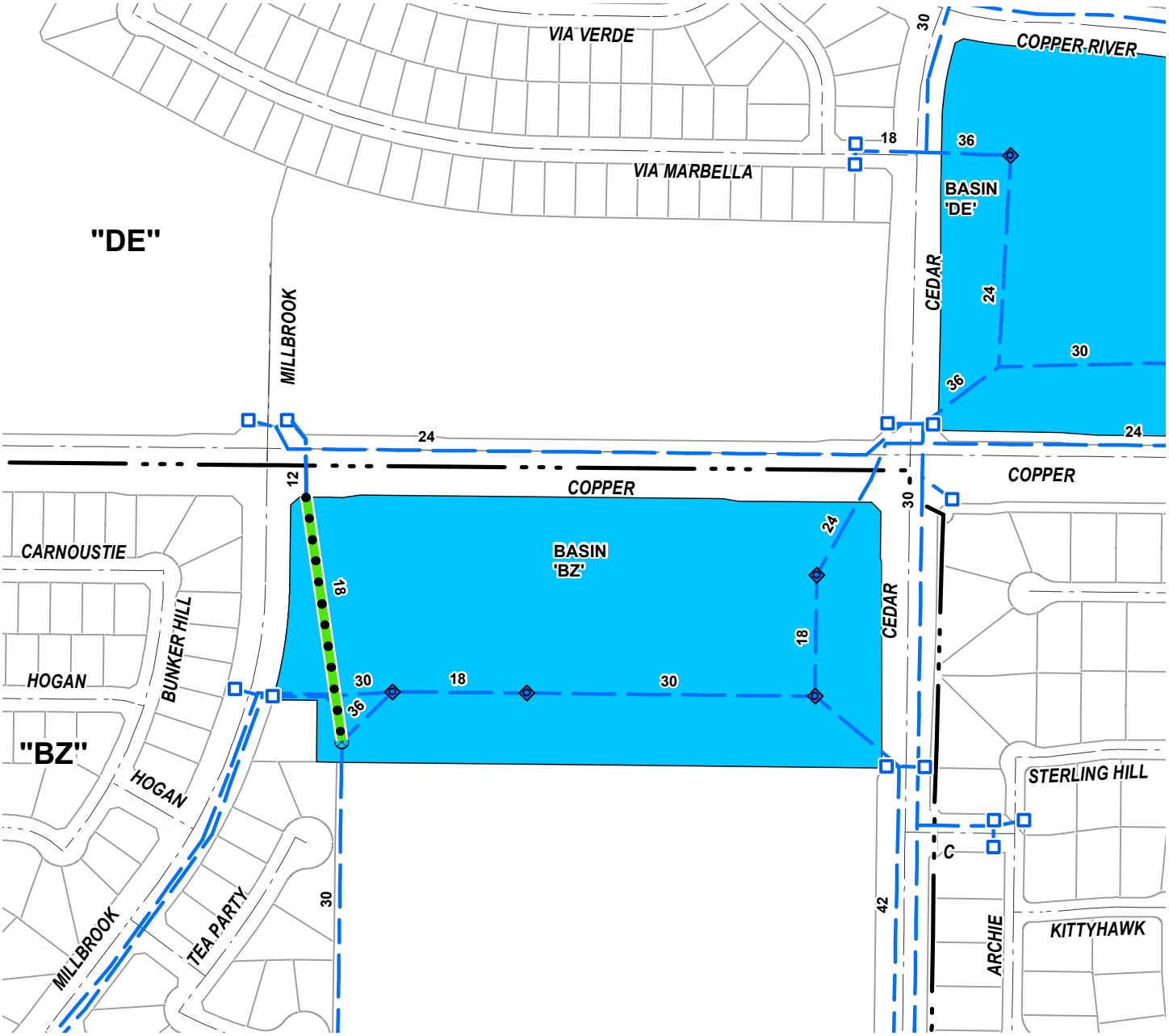

LEGEND

- Pipe To Be Constructed
- Existing Master Plan Facilities
- Future Master Plan Facilities
- FID Facilities
- Drainage Area Boundary

1 " = 300 '

BASIN "DE"
RECHARGE INTERTIE

FRESNO METROPOLITAN FLOOD CONTROL DISTRICT

Prepared by: keithr
Date: 4/23/2014
Path: K:\Autocad\DWGS\0EXHIBIT\GRANTS\PROP 84\Basin DE Intertie.mxd

NOTE:
THIS MAP IS SCHEMATIC
DISTANCES ARE APPROXIMATE.

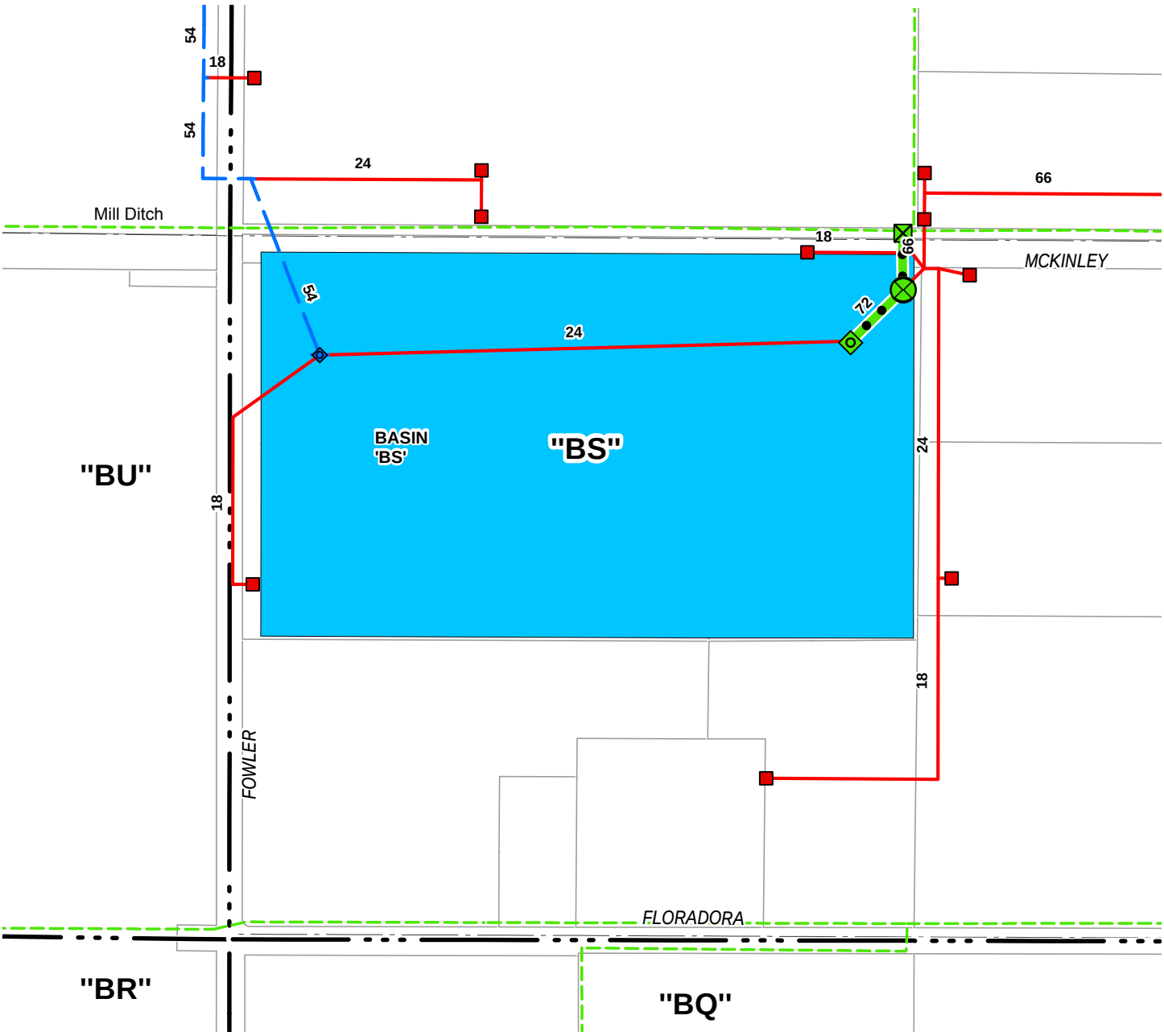

LEGEND

- Recharge Intertie, Stand Pipe, Outfall & Pipe To Be Constructed
- Existing Master Plan Facilities
- Future Master Plan Facilities
- FID Facilities
- Drainage Area Boundary

N

1 " = 300 '

BASIN "BS"
RECHARGE INTERTIE

FRESNO METROPOLITAN FLOOD CONTROL DISTRICT

Prepared by: wadet
Date: 4/23/2014
Path: K:\Autocad\DWGS\0EXHIBIT\GRANTS\PROP 84\Basin BS Intertie.mxd

NOTE:
THIS MAP IS SCHEMATIC
DISTANCES ARE APPROXIMATE.

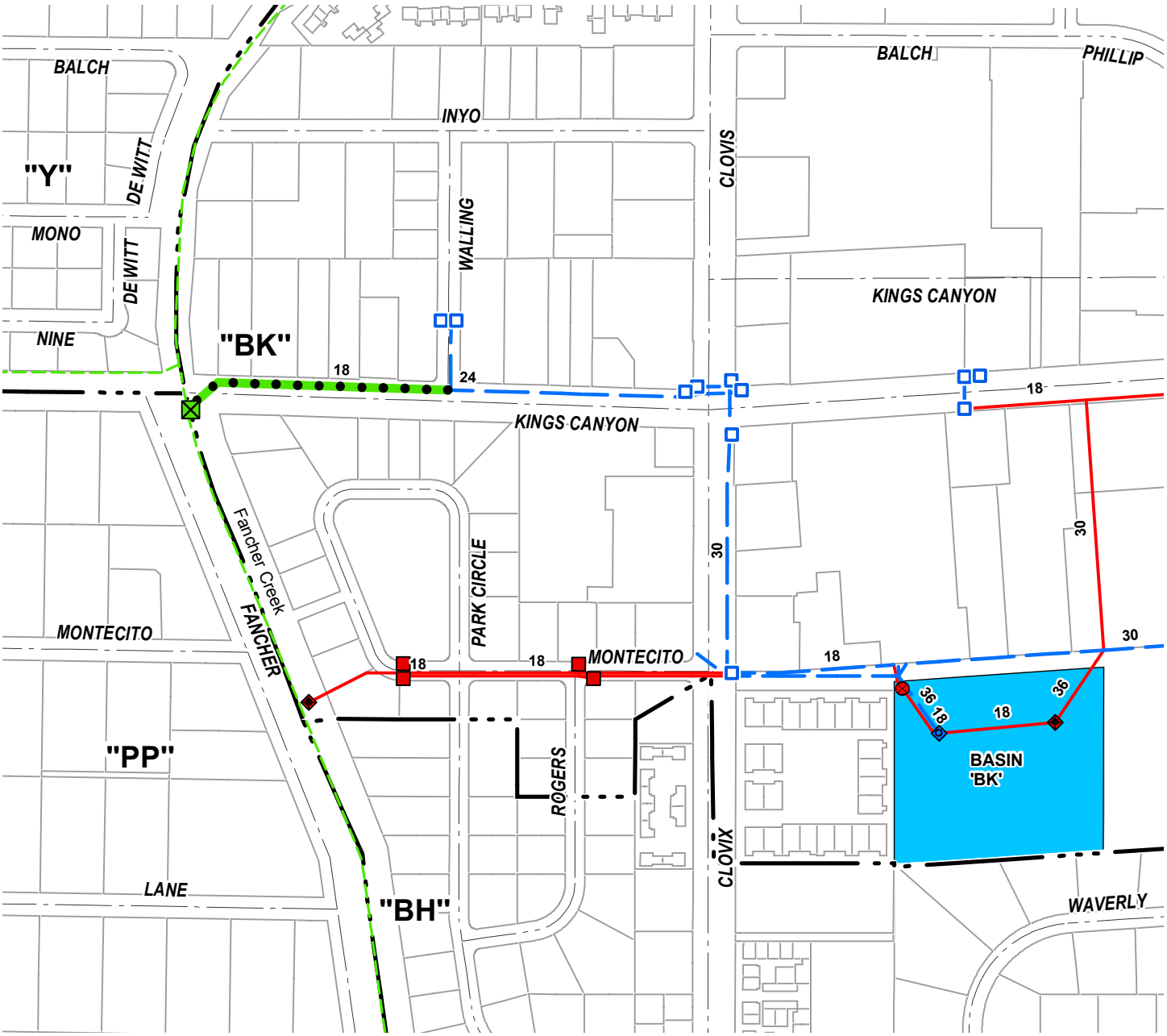

LEGEND

- Recharge Intertie & Pipe To Be Constructed
- Existing Master Plan Facilities
- Future Master Plan Facilities
- FID Facilities
- Drainage Area Boundary

N

1 " = 400 '

BASIN "BK"
RECHARGE INTERTIE

FRESNO METROPOLITAN FLOOD CONTROL DISTRICT

Prepared by: keithr
Date: 4/23/2014
Path: K:\Autocad\DWGS\0EXHIBIT\GRANTS\PROP 84\Basin BK Intertie.mxd

NOTE:
THIS MAP IS SCHEMATIC
DISTANCES ARE APPROXIMATE.

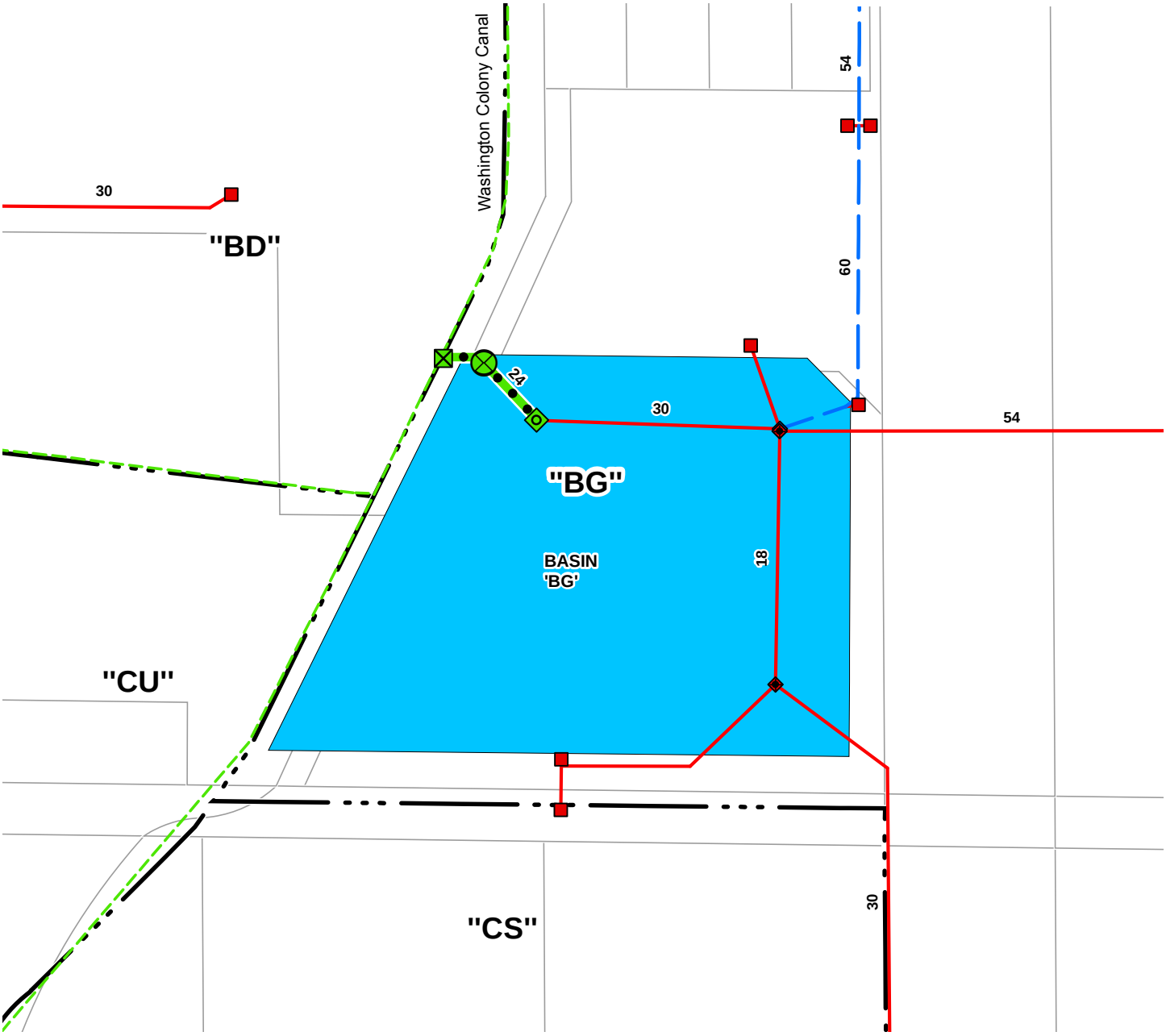

LEGEND

- Recharge Intertie, Stand Pipe, Outfall & Pipe To Be Constructed
- Existing Master Plan Facilities
- Future Master Plan Facilities
- FID Facilities
- Drainage Area Boundary

N

1 " = 300 '

BASIN "BG"
RECHARGE INTERTIE

FRESNO METROPOLITAN FLOOD CONTROL DISTRICT

Prepared by: wadet
Date: 4/23/2014
Path: K:\Autocad\DWGS\0EXHIBIT\GRANTS\PROP 84\Basin BG Intertie.mxd

NOTE:
THIS MAP IS SCHEMATIC
DISTANCES ARE APPROXIMATE.

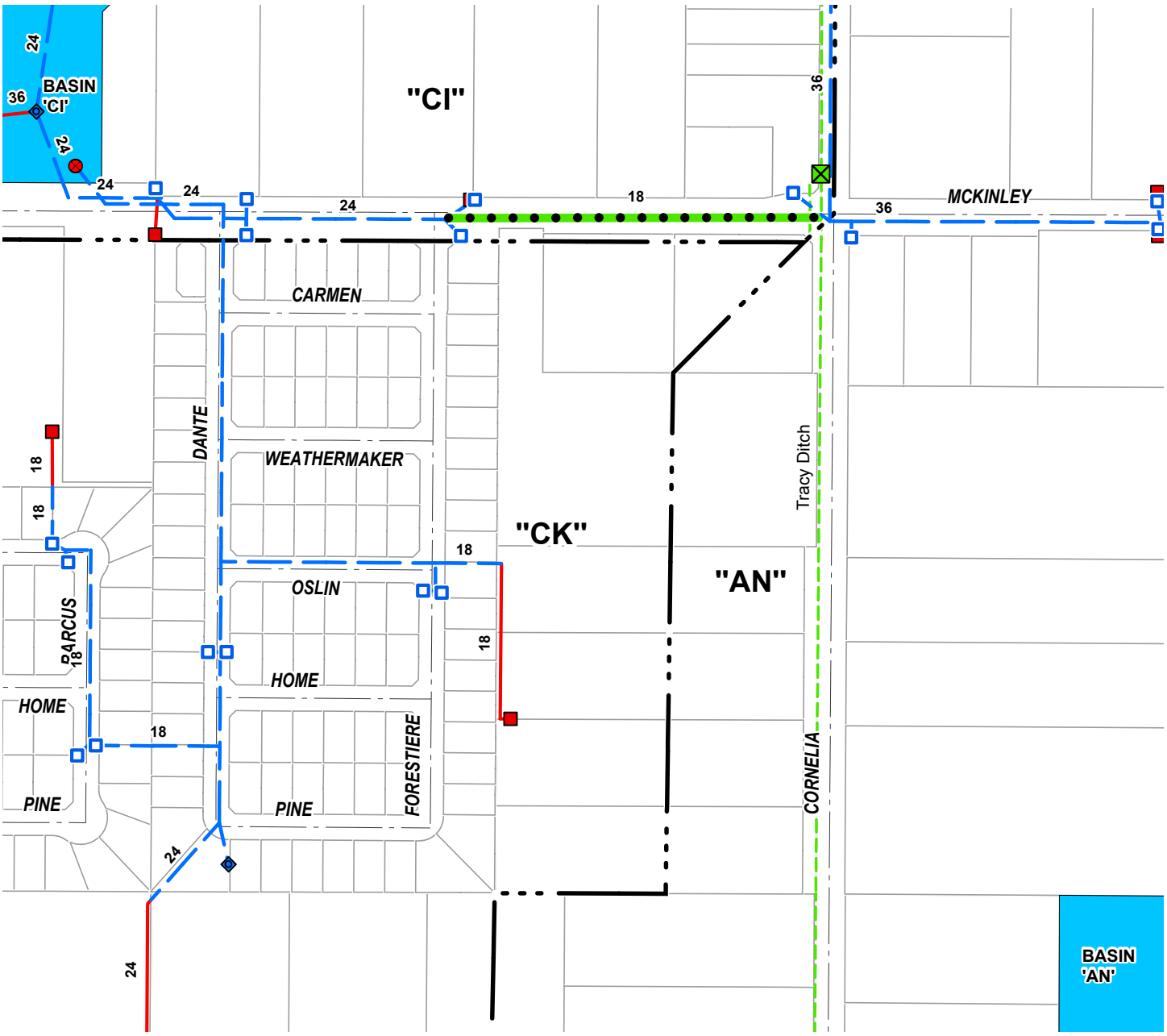

LEGEND

- Recharge Intertie To Be Constructed
- Pipeline Intertie To Be Constructed
- Existing Master Plan Facilities
- Future Master Plan Facilities
- FID Facilities
- Drainage Area Boundary

N

1 " = 300 '

BASIN "AN" & "CI" RECHARGE INTERTIE

FRESNO METROPOLITAN FLOOD CONTROL DISTRICT

Prepared by: wadet
Date: 4/23/2014
Path: K:\Autocad\DWGS\0EXHIBIT\GRANTS\PROP 84\Basin AN_CI Intertie.mxd

NOTE:
THIS DRAWING IS SCHEMATIC,
DISTANCES ARE APPROXIMATE.

ARMSTRONG BASIN
(Provides 170.0 Acre-Feet of Storage)

SCALE 1"= 500'

N

High Water Elevation = 326.0

30"

FL 30" = 324.63

Basin Floor Elevation = 296.8

13.0 Ac.

FWY 180

FANCHER CREEK

Proposed Pump Station

24"

Proposed Diversion Structure Intertie to Fancher Creek

BRIGGS CANAL

TEMPERANCE AVE.

Proposed 24" Discharge & Intake Pipeline intertie with Fancher Creek

24"

Proposed Pump Station

24"

BRIGGS BASIN
(Provides 217.0 Acre-Feet of Storage)

High Water Elevation = 328.0

Basin Floor Elevation = 301.7

14.4 Ac.

See Cross Section A - A on Sheet No. 4

KINGS CANYON AVE.

LEGEND

Existing Cal-Trans Basin Sites to be operated by FMFCD through Agreement

Proposed Basin Outfall Structure, Pump Station and Basin connector pipeline and size to be constucted with Grant funding

REGIONAL GROUNDWATER RECHARGE & SURFACE WATER RECYCLING PROJECT

SHEET 3 OF 3

FRESNO METROPOLITAN FLOOD CONTROL DISTRICT

K:\Master Planning & Special Projects\Basin & H&H Studies\DV\Special Study\Misc. Studies\DV-1 Briggs Basin\Armstrong-Briggs Basin Intertie for Grant 4-18-2014.dwg

DRAWN BY: —

DATE: 4/18/14

Attachment 4h

EOCSD Environmental Exemption Form

ENVIRONMENTAL INFORMATION FORM

Grantees are responsible for complying with all applicable laws and regulations for their projects, including the California Environmental Quality Act (CEQA). Work that is subject to the CEQA shall not proceed under this Grant Agreement until document(s) that satisfy the CEQA process are received by the Department of Water Resources (DWR) and DWR has completed its CEQA compliance. Work that is subject to a CEQA document shall not proceed until and unless approved by the DWR. Such approval is fully discretionary and shall constitute a condition precedent to any work for which it is required. Once CEQA documentation has been completed, DWR will consider the environmental documents and decide whether to continue to fund the project or to require changes, alterations or other mitigation. **This form is to be completed by the Lead Agency.**

DWR Agreement #: To be provided by DWR
Lead Agency: Upper Kings Basin IRWM Authority
Project Title: East Orosi Water Conservation and Meter Project
Project Manager: Eric Osterling
Phone Number: (559) 237-5567 Ext. 135
Address: 4886 East Jensen Avenue, Fresno, CA 93725

1. List the source of any other grants or funds received from the DWR to implement a portion of this project.

   Not Applicable

2. Is this a project as defined by CEQA? ☑ Yes ☐ No

   - If yes, proceed to #3.
   - If no, please explain below then skip to #8.

3. Is this project exempt from CEQA compliance? ☑ Yes ☐ No

   - If no, skip to #4.
   - If yes, check the appropriate response below, and then provide reasons for exemption in the space provided below. Once answered, skip to #7.

   Cite the CEQA Article, Section and Title of the CEQA exemption, if appropriate

   Statutory Exemptions: http://ceres.ca.gov/topic/env_law/ceqa/guidelines/art18.html
   Categorical Exemptions: http://ceres.ca.gov/topic/env_law/ceqa/guidelines/art19.html

   ☐ Lead Agency has already filed a Notice of Exemption (NOE) with the State Clearinghouse and/or County Clerk. (Attach copy of NOE and, if applicable, a copy of Board Resolution)

   ☑ Lead Agency will file a NOE with the State Clearinghouse and/or County Clerk. Provide estimated date: **March 2015**

   ☐ Lead Agency will NOT file a NOE with the State Clearinghouse and/or County Clerk. *If Lead Agency chooses not to file a NOE, sufficient documentation and information must be submitted to the DWR Project Manager along with this form, to allow DWR to make its own CEQA findings.*

Reason for exemption:
Meter Component - Article 19, Section 15303, New Construction or Conversion of Small Structures

4. Please check types of CEQA documents to be prepared:

   ☐ Negative Declaration
   ☐ Mitigated Negative Declaration
   ☐ Environmental Impact Report

5. Please describe the status of the CEQA documents, expected date of completion, and estimated cost, if requesting DWR funds relating to CEQA compliance:

   Status: _____
   Date of Completion: _____
   Estimated Costs: _____

6. If the CEQA document has been completed, if available please provide the title of the document and the State Clearinghouse number: _____.
   Submit an electronic version, or a CD copy, of the CEQA document and any required permits listed in Question 7 to the contact listed in the Commitment Letter.

7. Please list all required permits that must be obtained to complete the project (attach additional pages as necessary). Submit electronic versions or a CD copy of any final permits already completed to the contact listed in the Commitment Letter.

Type of Permit Required	Permitting Agency
Road Encroachment Permit	**County of Tulare**
Plumbing Permit	**County of Tulare**

8. This Environmental Information Form (EIF) was completed by:

   Print Name: **Anna DeSantiago**
   Agency: **East Orosi Community Service District**
   Phone Number: **(559) 528-2726**

   Signature: _____ Date: _____

Please return this completed form to your DWR Project Manager.

****

To be filled out by DWR Project Manager:

☐ DWR received environmental documents.

☐ DWR made Findings.

Attachment 4i

SCSD Labor Compliance Proposal

RICHARD PEREZ
LABOR COMPLIANCE MANAGER

PUBLIC WORKS & PRIVATE INDUSTRY

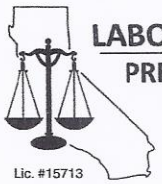

LABOR CONSULTANTS OF CALIFORNIA
PREVAILING WAGE & LABOR SPECIALIST

P.O. BOX 1875
HANFORD, CALIFORNIA 93232
PHONE 559/584-7499
FAX 559/584-0897

EMAIL: laborc@cnetech.com
www.laborconsultants.net

May 19, 2014

Michael Prado, Sr.
President
Sultana Community Services District
P. O. Box 168
Sultana, CA. 93666

Re: Proposal for Prevailing Wage Monitoring Services Contract for the Water Conservation and Meter Project

Dear Mr. Prado:

Thank you for allowing our firm to submit this proposal for your upcoming water and meter project. Labor Consultants of California is committed to giving our clients professional and proficient consultation in the area of state labor compliance programs (LCP's).

This year Labor Consultants of California celebrates its 21st year anniversary in business and is ready to provide prevailing wage monitoring for your project without exception or delay. Since our firm specializes in assisting public agencies with their prevailing wage obligations our resources are ready and able to proceed immediately if we are selected for this project.

Our staffing of a full-time labor compliance manager, 2 compliance officers and 2 payroll auditors assures our clients of hands-on project management, immediate review of certified payroll records and written notification to contractors of delinquent or inadvertent errors on their submissions.

Additionally since we are located in Hanford California we are in close proximity to the Central Valley providing quick access to the surrounding job sites.

We are currently working with a variety of districts in the area, i.e. East Orosi, West Goshen, Tranquility and other water and community agencies. During the period of 2010 to 2011, we provided monitoring services for the Fresno Metropolitan Flood Control District for their storm drain projects and for the City of Fresno's water meter project.

Be assured that our current projects will not delay our commitment to the Sultana Community Services District in fulfilling our statutory responsibility in prevailing wage monitoring pursuant to the State Labor Code.

The following attachments consist of a Labor Consultant Contract and Scope of Work for the upcoming water and meter.

If you have any questions or require additional information, please contact me directly at your earliest convenience.

Sincerely,

Richard Perez,
Labor Compliance Manager

Attachments: Labor Consultant Contract with Scope or Work

Contract for Consultant Services

This Agreement ("Agreement") made this _____, 2014 by and between Richard Perez d.b.a. Labor Consultants of California (**CONSULTANT**) and Sultana Community Services District (**CLIENT**).

Now, therefore, the parties mutually agree as follows:

1. **Services:** The CONSULTANT agrees to provide the following consulting services:
   A. Provide and work with the Sultana Community Services District on the development of a DIR approved Labor Compliance Program and Manual;
   B. Assist the Sultana Community Services District in the completion and submittal of the Labor Compliance Application to DIR;
   C. Implement and enforce the Labor Compliance Program (LCP) for construction and related projects;

2. **Compensation**:

Services A & B: Total Consulting Hours: 45 hours @ $75.00: $3,375

Services C: Labor Consultants of California's hourly rate for consulting and prevailing wage monitoring services is charged at $75.00 per hour not to exceed 30 hours per month or $2,250 per month for the planned projects. Consultant hours includes all certified payroll reviews, labor consultation and correspondences with the Sultana Community Services District, interested parties and project contractors, report writing, worker on-site interviews, project related expenses such as travel to the job site, printing cost and use of telephone, fax, computer and other business related materials.

Labor Consultants of California shall invoice the Client on a monthly basis and will include the number of hours worked with a brief description of the type of work that was provided;

3. **Term**: The CONSULTANT and CLIENT shall mutually agree to the final ending date of this Contract.

4. **Termination:** The services of the CONSULTANT shall start upon the execution of the Agreement without any break in consultant services and the work required shall be undertaken and completed in an expeditious and business-like manner. Failure to do so, or violation of any the covenants, agreements or stipulations of this Agreement by the CONSULTANT or the CLIENT shall give either CONSULTANT or CLIENT the right to terminate this Agreement provided the CONSULTANT or CLIENT is notified in writing five days prior to the effective termination date. If so terminated, CONSULTANT will have no further liability for services to be performed by CONSULTANT and CONSULTANT will only be paid for work performed to termination date and no further payments are due by CLIENT to CONSULTANT under this Agreement.

5. **Reporting:** The CONSULTANT shall periodically provide progress reports to CLIENT that may also include telephone calls, letters, emails or fax transmissions.

6. **Cooperation:** CLIENT agrees to cooperate with the CONSULTANT in carrying out the purposes of this Agreement.

7. **Location of Service Delivery:** The CONSULTANT shall primarily operate and provide services at its own premises and at the job sites.

8. **Amendments:** CLIENT may from time to time request changes in the Scope of Services of the CONSULTANT to be performed. Any changes in the number of hours required by CONSULTANT to complete the services will be reflected in the invoice submitted by CONSULTANT.

9. **Independent Contractor:** The CLIENT understands and agrees that services provided pursuant to this Agreement shall be provided in the capacity of an Independent Contractor and not as an employee. The CLIENT also understands and agrees that as an Independent Contractor, no benefits, other than the above specified consultation fee, will be accrued as a result of performing this Agreement nor will CLIENT pay or deduct any employment insurance, or state or federal income tax.

10. **Indemnification:** The CONSULTANT agrees to indemnify, defend and save CLIENT and hold harmless from any and all claims resulting solely from the gross negligence from the acts or omissions of the CONSULTANT in performance of this Agreement. CLIENT also agrees to indemnify, defend and hold the CONSULTANT harmless for any loss or liability for damages sustained by or on the part of any person or entity, which was not caused, by the sole and exclusive gross negligence or illegal act of the CONSULTANT.

In Witness Whereof, CONSULTANT and CLIENT have executed this Agreement the date first above written:

CONSULTANT Date: _____
LABOR CONSULTANTS OF CALIFORNIA

BY: _____

CLIENT Date: _____
SULTANA COMMUNITY SERVICES DISTRICT

BY: _____

Exhibit A: Scope of Work

Labor Compliance Program

Labor Consultants of California institutes this Labor Compliance Program for the purpose of implementing its policy relative to the labor compliance provisions of state funded public works contracts.

Public Resources Code 75075*: The body awarding any contract for a public works project financed in any part from funds made available pursuant to this division shall adopt and enforce, or contract with a third party to enforce, a labor compliance program pursuant to subdivision (b) of Labor Code Section 1771.5 for application to that public works project).*

California Labor Code Section 1776 requires contractors to keep accurate payroll records of trade workers on all public works projects and to submit copies of certified payroll records upon request.

California Labor Code Section 1777.5 requires contractors to employ registered apprentices on public works projects.

This labor compliance program ("LCP") contains the labor compliance standards required by state and federal laws, regulations, and directives and contract provisions, which include, but are not limited to, the following:

1. Contractors' payment of applicable general prevailing wage rates.
2. Contractors' employment of properly registered apprentices.
3. Contractors' provide certified payroll records upon request but not less than weekly.
4. Program's monitoring District construction sites for the verification of proper payments of prevailing wage rates and work classification.
5. Programs conducting pre-job conferences with contractors/subcontractors.
6. Program's withholding contract payments and imposing penalties for noncompliance.
7. Program's preparation and submittal of annual reports.

Labor Consultants of California is the representative for enforcement of the LCP.

Labor Consultants of California institutes this Labor Compliance Program ("LCP") for the purpose of implementing its policy relative to the labor compliance provisions of state and federally-funded public works contracts and specifically to comply with the provisions of the Public Resources Code Section 75075 sections by use of funds derived from the California Department of Public Health. This LCP contains the labor compliance standards required by state and federal laws, regulations, directives and contract provisions.

The California Labor Code Section 1770, et seq., and Public Resources Code Section 75075 require that contractors on public works projects pay their workers based on the

prevailing wage rates which are established and issued by the Department of Industrial Relations, Division of Labor Statistics and Research.

In establishing this LCP, Labor Consultants of California adheres to the statutory requirements as enunciated in Section 1771.5(b) of the Labor Code. Further, it is the intent of Labor Consultants of California to actively enforce this LCP by monitoring construction sites for the payment of prevailing wage rates, and by requiring contractors and subcontractors having workers on job sites to submit copies of certified payroll records demonstrating their compliance with the payment of prevailing wage rates.

Should applicable sections of the Labor Code or Title 8 of the California Code of Regulations undergo alteration, amendment, or deletion, Labor Consultants of California in accord with the district will modify the affected portions of this program accordingly.

LABOR CONSULTANTS OF CALIFORNIA/ LABOR COMPLIANCE PROGRAM COMPONENTS

Table of Contents

I. Call for Bids/ Contracts

II. Pre-Construction Conference

III. Contractor Eligibility Verification

IV. Labor Unions and Apprenticeship Programs

V. Certified Payroll Records

VI. On-Site Monitoring

VII. Investigations

VIII. Payroll Audits

IX. Withholding of Penalties, Forfeitures and Underpayments of Wages for Violations of Public Work Laws

X. Labor Standards Compliance Forms

I. Call for Bids/ Contracts

Labor Consultants of California works with the awarding body in securing both State and Federal wage determinations, attaching them to the bid specifications and contracts for each public works project thus assuring contractors bidding a project are aware of the requirements of Chapter 1 of Part 7 of Division 2 of the State Labor Code.

Additionally, each contractor securing a contract on a public works project is required to sign an acknowledgment that he or she understands the prevailing wage requirements and that contract payments shall not be made when payroll records are delinquent or inadequate.

II. Pre-Construction Conference

One of the most important aspects of assuring labor compliance on a project is to conduct a thorough pre-construction conference with the general contractor and the subcontractors. The conference sets forth the framework in establishing the labor standards parameters. Labor Consultants of California's conference agenda includes discussion and handouts of the following items:

1. Appropriate State Wage Determination and Federal Wage Decision (if applicable).
2. State Labor Standard Provisions (Labor Code Sections 1720, i.e.)
3. Payroll Reporting Forms (A-1-131 Form) with Instructions
4. Statement of Compliance
5. Certification of Understanding and Authorization
6. Certification of Applicable Fringe Benefit Payments/ Authorization for Deductions
7. Contractor's/ Subcontractor's Certification Concerning Labor Standards and Prevailing Wages
8. Posting Requirement of Notice to All Employees (General Contractor)
9. Suggested Checklist of Labor Law Requirements (CCR 16430)

Upon the conclusion of the conference, Labor Consultants of California preserves the minutes of the conference and submits them to the awarding body. In addition, Labor Consultants of California will provide copies of the Laws and Regulations Governing the Payment of Prevailing Wages, which will be available for review by contractors or other interested parties.

III. Contractor Eligibility Verification

Prior to awarding a contract, Labor Consultants of California shall verify that the successful bidder and all prime contractors are not on the state or federal list of ineligible contractors, that they possess a valid state contractor's license and meet other licensing requirements, e.g. workers compensation insurance. Labor Consultants of California also recommends similar verification of all selected subcontractor's eligibility prior to

working on the project. The company maintains Internet access to federal and state web sites securing vital information.

IV. Labor Unions and Apprenticeship Programs

Labor Consultants of California maintains a professional business relationship with the building trades and apprenticeship programs. The activities of this firm shall include on-going dialogue with these agencies in assuring compliance with apprentices on the job and adherence to a collective bargaining agreement if applicable.

Contractors on public work projects are provided copies of the apprentice regulations pursuant to Labor Code 1777.5 Apprentices on Public Work Projects/ Summary of Requirements, DAS-140/ Contract Award Information and CAC-2 Training Fund Contribution Form).

V. Certified Payroll Records

Labor Consultants of California reviews all of the certified payroll records (A-1-131 form) on a weekly basis and compares them to the wage decision and/or wage determination in effect. Improprieties or inadvertent errors on the payrolls are communicated in writing to the general contractor with a request for corrective action within a 30 day time period.

VI. On-Site Monitoring

A significant step in determining project labor standards compliance is to conduct frequent on-site employee interviews. It is critical to have early detection of potential violations. The results of the interviews are compared to the contractor's certified payroll records to ascertain that the correct classification, hours and wages were paid. The mailing of employee questionnaires may also be utilized when it is cumbersome or employees are reluctant to be interviewed on-site. (It should be noted that Labor Consultants of California has the ability to conduct interviews in both English and Spanish).

VII. Investigations

The general or prime contractor on a construction project is not only responsible for its own workforce but also has the burden of responsibility for its subcontractors' employees. Issues that invoke wage restitution must be investigated in a timely manner thus giving the interested parties the opportunity to respond and offer resolution to the investigative findings. As representative or agent for an awarding body, Labor Consultants of California consults with management on every compliance matter that may need resolution and prior to recommending any punitive action against a contractor.

VIII. Payroll Audits

Appropriately, upon receipt of certified payroll records, employee interview forms and other available documents, i.e. inspector daily logs, etc., Labor Consultants conducts various payroll audits to determine if through its examination of records, the prime and subcontractors have met labor standards compliance. At its conclusion, Labor Consultants submits written notification of its findings to the awarding body with a recommendation for disbursement of retention payments.

IX. Withholding of Penalties, Forfeitures and Underpayments of Wages for Violations of Prevailing Wage Laws

Labor Consultants of California works with awarding bodies in establishing a special account for depositing funds withheld for wage restitution and/or penalties. A contractor is notified in writing specifying the reasons for the withholding or suspension of contract payments.

Should a contractor refuse to make such restitution as requested, Labor Consultants of California may through its LCP, disburse or cause to be disburse out of withheld funds for and on account of the contractor, moneys to the respective employees. Should a contractor dispute the basis of the findings, such funds will not be disbursed; the contractor will be advised on his rights for appealing through the Department of Industrial Relations, Division of Labor Standards Enforcement.

Willful violations of public work laws pursuant to Labor Code Section 1777.1 (c) shall be reported to the State Labor Commissioner in writing within 30 days from the time the LCP became aware specifying the name and address of the contractor, the public works project, the awarding agency, and the amount of money withheld by the awarding body.

X. Labor Standards Compliance Forms and Files

Labor Consultants of California will establish and maintain all required labor standards compliance forms and files for the project including but not limited to:

A. Applicable state and federal wage determinations and all modifications
B. Pre-Construction Conference Minutes
C. Notice of Start of Construction
D. Apprenticeship registration and other required labor standards materials
E. Copies of all memoranda and or correspondence relating to labor standards administration
F. Records of restitution effected
G. Administrative actions taken
H. Semi-Annual Labor Standards Enforcement Reports
I. Final Compliance Report
J. Copy of Contractor and Subcontractors Labor Standards Certification
K. Payroll submissions (A-1-131) or approved equivalent with Statement of Compliance

L. Employee interviews, attached to payroll against which compliance was monitored
M. Letters authorizing payroll deductions
N. Letters identifying fringe benefit funds
O. Other information required by federal and state agencies

Attachment 4j

SCSD Environmental Exemption Form

ENVIRONMENTAL INFORMATION FORM

Grantees are responsible for complying with all applicable laws and regulations for their projects, including the California Environmental Quality Act (CEQA). Work that is subject to the CEQA shall not proceed under this Grant Agreement until document(s) that satisfy the CEQA process are received by the Department of Water Resources (DWR) and DWR has completed its CEQA compliance. Work that is subject to a CEQA document shall not proceed until and unless approved by the DWR. Such approval is fully discretionary and shall constitute a condition precedent to any work for which it is required. Once CEQA documentation has been completed, DWR will consider the environmental documents and decide whether to continue to fund the project or to require changes, alterations or other mitigation. **This form is to be completed by the Lead Agency.**

DWR Agreement #: To be provided by DWR
Lead Agency: Upper Kings Basin IRWM Authority
Project Title: Sultana Water Conservation and Meter Project
Project Manager: Eric Osterling
Phone Number: (559) 237-5567 Ext. 135
Address: 4886 East Jensen Avenue, Fresno, CA 93725

1. List the source of any other grants or funds received from the DWR to implement a portion of this project.

   Not Applicable

2. Is this a project as defined by CEQA? ☑ Yes ☐ No

   - If yes, proceed to #3.
   - If no, please explain below then skip to #8.

3. Is this project exempt from CEQA compliance? ☑ Yes ☐ No

   - If no, skip to #4.
   - If yes, check the appropriate response below, and then provide reasons for exemption in the space provided below. Once answered, skip to #7.

   Cite the CEQA Article, Section and Title of the CEQA exemption, if appropriate

   Statutory Exemptions: http://ceres.ca.gov/topic/env_law/ceqa/guidelines/art18.html
   Categorical Exemptions: http://ceres.ca.gov/topic/env_law/ceqa/guidelines/art19.html

   ☐ Lead Agency has already filed a Notice of Exemption (NOE) with the State Clearinghouse and/or County Clerk. (Attach copy of NOE and, if applicable, a copy of Board Resolution)

   ☑ Lead Agency will file a NOE with the State Clearinghouse and/or County Clerk. Provide estimated date: **March 2015**

   ☐ Lead Agency will NOT file a NOE with the State Clearinghouse and/or County Clerk. *If Lead Agency chooses not to file a NOE, sufficient documentation and information must be submitted to the DWR Project Manager along with this form, to allow DWR to make its own CEQA findings.*

Reason for exemption:
Meter Component - Article 19, Section 15303, New Construction or Conversion of Small Structures

4. Please check types of CEQA documents to be prepared:

   ☐ Negative Declaration
   ☐ Mitigated Negative Declaration
   ☐ Environmental Impact Report

5. Please describe the status of the CEQA documents, expected date of completion, and estimated cost, if requesting DWR funds relating to CEQA compliance:

   Status: _____
   Date of Completion: _____
   Estimated Costs: _____

6. If the CEQA document has been completed, if available please provide the title of the document and the State Clearinghouse number: _____.
   Submit an electronic version, or a CD copy, of the CEQA document and any required permits listed in Question 7 to the contact listed in the Commitment Letter.

7. Please list all required permits that must be obtained to complete the project (attach additional pages as necessary). Submit electronic versions or a CD copy of any final permits already completed to the contact listed in the Commitment Letter.

Type of Permit Required	Permitting Agency
Road Encroachment Permit	**County of Tulare**
Plumbing Permit	**County of Tulare**

8. This Environmental Information Form (EIF) was completed by:

   Print Name: **Michael Prado**
   Agency: **Sultana Community Service District**
   Phone Number: **(559) 859-7330**

   Signature: _____ Date: _____

Please return this completed form to your DWR Project Manager.

****

To be filled out by DWR Project Manager:

☐ DWR received environmental documents.

☐ DWR made Findings.

Attachment 4k

Labor Compliance Plan Approved List

Approved: 9/1/2011
LCP uses a Contract Administrator.

LCP ID: 2012.01144
City of Dinuba
George Avila
1088 E. Kamm Avenue
Dinuba, CA 93618
Phone: 559-591-5924
Fax: 559-591-5923
Approved: 4/2/2013
LCP uses a Contract Administrator.

LCP ID: 2013.01162
City of El Monte
Marlene Miyoshi
11333 Valley Blvd
El Monte, CA 91731
Phone: 626-580-2058
Fax: 626-454-3143
Approved: 6/26/2013
LCP uses a Contract Administrator.

LCP ID: 2011.01113
City of Escalon
Dave Ruby
1854 Main Street
Escalon, CA 95320
Phone: (209) 838-4100
Fax: N/A
Approved: 3/21/2012
LCP uses a Contract Administrator.

LCP ID: 2011.01043
City of Fremont
Jeanne Suyeishi - Associate Civil Engineer
PO Box 5006
Fremont, CA 94537
Phone: N/A
Fax: N/A
Approved: 9/1/2011
LCP uses a Contract Administrator.

LCP ID: 2011.00792
City of Fresno
Robert Anderson
2600 Fresno St., Rm 3065
Fresno, CA 93721
Phone: 559-621-8610
Fax: N/A
Approved: 9/1/2011
LCP uses a Contract Administrator.

LCP ID: 2012.01147
City of Glendale
Peter Vierheilig, Project Manager
613 E. Broadway
Glendale, CA 91206-4399
Phone: 818-548-2057
Fax: 818-548-3789
Approved: 3/22/2013
Consultant: CS & Associates

LCP ID: 2013.01190
City of Gridley
Keith Gebhardt
685 Kentucky Street
Gridley, CA 95948
Phone: 530-846-3632
Fax: 530-846-3229
Approved: 8/5/2013
LCP uses a Contract Administrator.

LCP ID: 2011.00793
City of Hanford
John Doyle
900 S. 10th Ave
Hanford, CA 93230
Phone: 559-585-2571
Fax: N/A
Approved: 9/1/2011
LCP uses a Contract Administrator.

LCP ID: 2011.00781
City of Huntington Beach

Fax: 559 327 9129
Approved: 1/27/2004

LCP ID: 2011.01084
Coachella Valley Unified School District
Elas Esqueda - Director of Facilities
83-733 Avenue 55
Thermal, CA 92274
Phone: N/A
Fax: N/A
Approved: 9/1/2011
LCP uses a Contract Administrator.

LCP ID: 2011.01098
Coalition for Urban/Rural Environmental Stewardship (CURES)
Parry Klassen - Executive Director
531-D North Alta Ave
Dinuba, CA 93618
Phone: 559-646-2225
Fax: 559-288-8125
Approved: 9/19/2012
LCP uses a Contract Administrator.

LCP ID: 2011.00824
COAST Community College District
Andrew Dunn - Vice Chancellor, Admin. Serv.
1370 Adams Ave
Costa Mesa, CA 92626
Phone: 714-438-4612
Fax: N/A
Approved: 9/1/2011
LCP uses a Contract Administrator.

LCP ID: 2013.01154
Coastal San Luis Resource Conservation District
Nicole Smith - Conservation Programs Manager
645 Main St STE F
Morro Bay, CA 93442
Phone: 805-772-4391
Fax: N/A
Approved: 4/4/2013
LCP uses a Contract Administrator.

LCP ID: 2010.00655
College of the Canyons (COC) The Santa Clarita Community College District
Jim Schrage - VP, Facilities Plannin
26455 Rockwell Canyon Rd
Snata Clarita, CA 91355
Phone: N/A
Fax: N/A
Approved: 10/12/2010
LCP uses a Contract Administrator.

LCP ID: 2011.00943
Colten Joint Unified School District
Owen Chang
851 South Mt. Vernon
Colton, CA 92324
Phone: 909-580-6643
Fax: N/A
Approved: 9/1/2011
LCP uses a Contract Administrator.

LCP ID: 2011.01092
Consolidated Irrigation District
Phillip Desatoff - General Manager
PO Box 209
Selma, CA 93662
Phone: (559) 896-1600
Fax: N/A
Approved: 9/1/2011

LCP ID: 2011.00765
Contra Costa County / East Contra Costa County Habitat Conservancy
Abigail Fateman - Department of Conservation & Dvlpmt.
651 Pine Street – North Wing, 4th Floor
Martinez, CA 94553
Phone: (925) 335-1272
Fax: N/A
Approved: 9/1/2011
LCP uses a Contract Administrator.

LCP ID: 2011.01013
Copper Mountain Community College
Dr. Joseph B. Olsen - VP Finance and Administration Scvs

Approved: 9/1/2011
LCP uses a Contract Administrator.

LCP ID: 2013.01169
East Orosi Community Services District
Ana DeSantiago, President
P.O. Box 213
Orosi, CA 93647
Phone: 559-528-2726
Fax: N/A
Approved: 5/16/2013
LCP uses a Contract Administrator.

LCP ID: 2011.00756
East Side Union High School District
Robert C Bush - Program Mgr
830 North Capitol Ave
San Jose, CA 95133
Phone: 408-347-5113
Fax: N/A
Approved: 9/1/2011
LCP uses a Contract Administrator.

LCP ID: 2011.00912
East Valley Water District
Gary Sturdivan - Safety & Regulatory
3654 E. highland Ave
Highland, CA 92346
Phone: 909-888-8986
Fax: 909-383-1481
Approved: 9/1/2011
LCP uses a Contract Administrator.

LCP ID: 2011.00956
Eastern Municipal Water District
Henriette Nieblas - Construction Admin
PO Box 8300
Perris, CA 92572
Phone: 951-928-3777 x 4433
Fax: N/A
Approved: 9/1/2011
LCP uses a Contract Administrator.

LCP ID: 2011.00908
Eastside Union School District
Mr. Rajakumar - Asst. Superintendent
45006 30th St. East
Lancaster, CA 93535
Phone: 661-946-2813
Fax: 661-946-8211
Approved: 9/1/2011
LCP uses a Contract Administrator.

LCP ID: 2013.01222
Ecology Action of Santa Cruz
Sherry Lee Bryan - Senior Program Specialist
877 Ceder St ste 240
Santa Cruz, CA 95060
Phone: 831-515-1314
Fax: N/A
Approved: 1/2/2014
Contractor Compliance and Monitoring Inc. Consultants

LCP ID: 2011.00932
Edison Elementary School District
Erica Andrews
11518 School St
Edison, CA 93220
Phone: 661-363-5394
Fax: N/A
Approved: 9/1/2011
LCP uses a Contract Administrator.

LCP ID: 2011.00964
El Camino Community College District
Rocky Bonura - Director of Business Services
16007 Crenshaw Blvd
Torrance, CA 90506
Phone: 310-660-3593
Fax: N/A
Approved: 9/1/2011
LCP uses a Contract Administrator.

LCP ID: 2003.00369
El Dorado Union High School District

Fax: N/A
Approved: 9/1/2011
LCP uses a Contract Administrator.

LCP ID: 2011.00832
Fresno County Office of Education
Jeff Becker - Dir. Facilities
1111 Van Ness
Fresno, CA 93712
Phone: N/A
Fax: N/A
Approved: 9/1/2011
LCP uses a Contract Administrator.

LCP ID: 2011.00799
Fresno Irrigation District
Jennifer Williams
2907 S. Maple Ave
Fresno, CA 93725
Phone: 559-233-7161 x 322
Fax: N/A
Approved: 9/1/2011
LCP uses a Contract Administrator.

LCP ID: 2014.00230
Fresno Metropolitan Flood Control District
Andrew Remus - Staff Analyst IV
5469 E. Olive
Fresno, CA 93727
Phone: 559-456-3292
Fax: 559-456-3194
Approved: 3/25/2014
LCP Administered by Labor Consultants of California

LCP ID: 2003.00087
Fresno Unified School District
Nancy Anderson
4460 North Brawley Avenue
Fresno, CA 93722
Phone: (559) 457-3703
Fax: N/A
Approved: 2/25/2010

LCP ID: 2003.00039
Fullerton Joint Union High School District
Jerry Skaff - Director of Construction and LCO
1051 West Bastanchury Road
Fullerton, CA 92833
Phone: 714 870 2812
Fax: 714 870 2835
Approved: 3/4/2003

LCP ID: 2011.01075
Galt Joint Union High School District
Audry Kilpatrick
12945 Marengo Rd
Galt, CA 95632
Phone: 209-745-3094
Fax: N/A
Approved: 9/1/2011
LCP uses a Contract Administrator.

LCP ID: 2011.00768
Gilroy Unified School District
Keith Holtslander - Facilities Director
7810 Arroyo Circle
Gilroy, CA 95020
Phone: (408) 848-5317
Fax: N/A
Approved: 9/1/2011
LCP uses a Contract Administrator.

LCP ID: 2011.00833
GLENDALE Unified School District
Margaret Brown - Administrator
223 N. Jackson S
Glendale, CA 91206
Phone: 818-507-0201
Fax: N/A
Approved: 9/1/2011
LCP uses a Contract Administrator.

LCP ID: 2011.01020
Golden State Water
Ruben Trigueros - Project Team Leader