APPENDIX 2-2 Final Study/Mitigated Negative Declaration

Att2_2015IRWM_ProJust_3of5

~~*Public Review Draft*~~

FINAL INITIAL STUDY/ MITIGATED NEGATIVE DECLARATION

DIVISION 9 IRRIGATION ENHANCEMENT PROJECT

South San Joaquin Irrigation District
SSJID Division 9, West of the City of Ripon
San Joaquin County, CA

~~July 23~~August 25, 2009

InSite
environmental, inc.

6653 Embarcadero Drive, Suite Q
Stockton, CA 95219
209.472.8650
Fax 209.472.8654
www.insite-env.com

Prepared for:
SOUTH SAN JOAQUIN IRRIGATION DISTRICT
11011 E. Highway 120
Manteca, CA 95336

~~*Public Review Draft*~~

FINAL INITIAL STUDY/ MITIGATED NEGATIVE DECLARATION

DIVISION 9 IRRIGATION ENHANCEMENT PROJECT

South San Joaquin Irrigation District
SSJID Division 9, West of the City of Ripon
San Joaquin County, CA

August 25~~July 23~~, 2009

Prepared for:
SOUTH SAN JOAQUIN IRRIGATION DISTRICT
11011 E. Highway 120
Manteca, CA 95336
Attn: Sam Bologna

Prepared by:
INSITE ENVIRONMENTAL, INC.
6653 Embarcadero Drive, Suite Q
Stockton, CA 95219

TABLE OF CONTENTS

		Page
TABLE OF CONTENTS		ii
NEGATIVE DECLARATION		iv
CHAPTER 1	INTRODUCTION TO INITIAL STUDY	1-1
CHAPTER 2	PROJECT DESCRIPTION	2-1
CHAPTER 3	ENVIRONMENTAL CHECKLIST FORM	3-1
	GENERAL PROJECT DESCRIPTION	3-1
	ENVIRONMENTAL FACTORS POTENTIALLY AFFECTED	3-2
	LEAD AGENCY DETERMINATION	3-2
	EVALUATION OF ENVIRONMENTAL IMPACTS	3-4
	ENVIRONMENTAL CHECKLIST AND NARRATIVE EXPLANATION	3-5
	1. Aesthetics	3-5
	2. Agricultural Resources	3-7
	3. Air Quality	3-9
	4. Biological Resources	3-17
	5. Cultural Resources	3-27
	6. Geology and Soils	3-30
	7. Hazards and Hazardous Materials	3-31
	8. Hydrology and Water Quality	3-36
	9. Land Use and Planning	3-40
	10. Mineral Resources	3-42
	11. Noise	3-43
	12. Population and Housing	3-46
	13. Public Services	3-47
	14. Recreation	3-50
	15. Transportation/Traffic	3-51
	16. Utilities and Service Systems	3-53
	17. Global Climate Change	3-56
	18. Mandatory Findings of Significance	3-57
CHAPTER 4	SOURCES	4-1

LIST OF TABLES

1-1	Summary of Impacts and Mitigation Measures	1-4
3-1	Ambient Air Quality Standards	3-12
3-2	Sensitive Plant and Wildlife Species Documented or Potentially Occurring in the Project Vicinity	3-19

LIST OF FIGURES

1.	Regional Map	2-8
2.	SSJID	2-9
3.	Vicinity Map	2-10
4.	USGS Map	2-11
5.	Aerial Photo	2-12
6.	Proposed Project	2-13
7.	Storage Basin Elevation	2-14

APPENDICES

A. Biological Report
B. Archaeological Report (On file with SSJID for qualified viewers)
C. Environmental Data Report (EDR)
D. Public Review Transmittal Documents

NEGATIVE DECLARATION

Lead Agency:

SOUTH SAN JOAQUIN IRRIGATION DISTRICT (SSJID)
11011 E. Highway 120
Manteca, CA 95336

PROJECT NAME: SSJID Division 9 Irrigation Enhancement Project

PROJECT PROPONENT: South San Joaquin Irrigation District (SSJID)
11011 E. Highway 120
Manteca, CA 95336

PROJECT LOCATION: SSJID's Division 9 comprises approximately 9,640 acres located in the southern most portion of the District, in the vicinity of the Stanislaus River, east and west of the City of Ripon. The 3,800-acre project area is a portion of Division 9; the project area includes the westernmost portion of Division 9, which is located south of SR 99, south of West Ripon Road, west of the City of Ripon, and east of Manteca Road in the unincorporated area of San Joaquin County.~~SSJID's Division 9 encompasses 3,800 acres west of the City of Ripon and is located approximately 1.5 miles southwest of SR 99 in unincorporated San Joaquin County.~~

PROJECT DESCRIPTION: The proposed Irrigation Enhancement Project involves the installation and operation of a new pressurized irrigation water supply system. The proposed pressurized system would provide improved agricultural irrigation service to the 3,800 acres of currently flood-irrigated agricultural land that is part of~~creates~~ SSJID's Division 9.

The proposed system would include 12.6 miles of underground pressurized PVC pipeline, and two storage basins totaling 12.6 acres, each equipped with a pump station and groundwater well. Proposed pipelines would be located adjacent to the SSJID's existing gravity irrigation pipeline system; most of this system is located along existing public roads and within disturbed agricultural access roads. The proposed storage basins located at the eastern and western portions of the project would provide approximately 80 acre-feet of storage and occupy a total footprint area of 12.6 acres.

DETERMINATION:

The Lead Agency has prepared an Initial Study, attached, which considers the potential environmental effects of the proposed project. The Initial Study identifies potentially significant effects, but:

1. Revisions in the project plans or mitigation proposals made by the Lead Agency before a proposed Mitigated Negative Declaration and Initial Study are released for public review would avoid the effects or mitigate the effects to a point where clearly no significant effects would occur, and

2. There is no substantial evidence, in light of the whole record before the agency, that the project as revised may have a significant effect on the environment. The project revisions, proposals or mitigation measures agreed to by the Lead Agency are listed below.

AIR QUALITY MITIGATION MEASURES

1. The contractor shall comply with all applicable requirements of SJVAPCD Regulation VIII, including compliance with the following mitigation measures 2 through 109.

2. Visible Dust Emissions (VDE) from construction, demolition, excavation or other earthmoving activities related to the project shall be limited to 20% opacity or less, as defined in Rule 8011, Appendix A. The dust control measures specified in mitigations 3 through 9 shall be applied as required to maintain the VDE standard.

3. Pre-water all land clearing, grubbing, scraping, excavation, land leveling, grading, cut and fill, and demolition activity sites and phase earthmoving.

4. Apply water, chemical/organic stabilizer/suppressant, or vegetative ground cover to all disturbed areas, including unpaved roads.

5. Restrict vehicular access to the disturbance area during periods of inactivity.

6. Apply water or chemical/organic stabilizers/suppressants, construct wind barriers and/or cover exposed potentially dust-generating materials.

7. When materials are transported off-site, stabilize and cover all materials to be transported and maintain six inches of freeboard space from the top of the container.

8. Remove carryout and trackout of soil materials from paved roads on a daily basis unless it extends more than 50 feet from site; carryout and trackout extending more than 50 feet from the site shall be removed immediately. The use of dry rotary brushes is expressly prohibited except where preceded or accompanied by

sufficient wetting to limit the visible dust emissions. Use of blower devices is expressly forbidden.

9. Traffic speeds on unpaved roads shall be limited to 15 mph.

10. The contractor shall submit a Dust Control Plan to the SJVAPCD for approval prior to beginning of demolition or construction, as required by SJVAPCD Rule 8021, and shall implement said plan during demolition and construction.

BIOLOGICAL RESOURCE MITIGATION MEASURES

1. The drainage located north of Melton Road and parallel to the proposed pipeline alignment shall be fenced with a highly-visible fencing material during the construction period in order to prevent construction encroachment into this waterway.

2. SSJID shall implement either Mitigation Measure #3 below, or Mitigation Measures 4, and 5, 6 and 7 below.

3. SSJID shall obtain coverage of the project by the San Joaquin County Multi-Species Habitat Conservation Plan (SJMSCP), including the payment of any required fee and the implementation of any required Incidental Take Minimization Measures. ITMMs specified by the San Joaquin County COG shall be observed by the SSJID contractors; or

4. SSJID shall retain a qualified biologist to conduct pre-construction surveys for nesting Swainson's hawks along the proposed pipeline alignments if construction occurs between March 1 and September 15. The survey should include all large trees visible from the alignment. If active nests are found, the qualified biologist should determine the need (if any) for temporal restrictions on construction.

5. SSJID shall retain a qualified biologist to conduct pre-construction surveys of the project site for burrowing owls along the alignment if construction commences between February 1 and August 31. The survey should include the ruderal areas along the pipeline alignments, and all areas of open grassland visible from the alignment. If occupied burrows are found, a qualified biologist should determine the need (if any) for temporal restrictions on construction.

6. In the event any trees that need to be removed or trimmed to facilitate the project, they should be felled or trimmed outside of the general bird nesting season (February 1 through August 31) or SSJID shall have a nesting bird survey conducted immediately prior to tree trimming or removal. If active nests are found, tree felling or trimming should be delayed until the young have fledged.

7. SSJID shall implement the recommendations of the qualified biologist in Mitigation Measures 4 and 5.

CULTURAL RESOURCE MITIGATION MEASURES

1. If any subsurface cultural resources are encountered during construction of the proposed pipelines or storage basins, all construction activities in the vicinity of the encounter shall be halted until a qualified archaeologist can examine these materials and make a determination of their significance. SSJID and the contractor shall be responsible for mitigation of any significant cultural resources pursuant to the CEQA Guidelines.

2. If human remains are encountered at any time during the development of the project, all work in the vicinity of the find shall halt, and the County Coroner shall be notified immediately. The Coroner must contact the Native American Heritage Commission if the remains have been identified as being of Native American descent. At that time, the SSJID contractor shall retain a qualified archaeologist to evaluate the archaeological implications of the finds. The contractor shall conform to the requirements of the CEQA Guidelines if human remains are found to be of Native American origin.

HAZARDS AND HAZARDOUS MATERIAL MITIGATION MEASURES

1. If evidence of unusual odors or soil discoloration is noted during construction, construction shall be halted. The SSJID contractor shall contact a qualified environmental professional to evaluate the situation and take or dictate action as required by applicable regulations.

2. The contractor shall prepare and implement a hazardous materials spill plan for the project. The spill plan shall identify the level of worker training and supplies of spill containment and cleanup materials needed to respond to potential hazardous materials spills that could occur in conjunction with the project.

3. Project construction will be coordinated with the emergency response agency with responsibility for the area if construction will require partial public street closure.

HYDROLOGY AND WATER QUALITY MITIGATION MEASURES

1. The contractor shall prepare and implement a Storm Water Pollution Prevention Plan (SWPPP) for the project and file a Notice of Intent (NOI) with the Regional Water Quality Control Board prior to commencement of construction activity. The SWPPP shall be available on the construction site at all times.

2. Project plans shall incorporate an Erosion Control Plan consistent with all applicable provisions of the SWPPP.

3. The contractor shall submit the RWQCB Waste Discharger's Identification Number (WDID) to SSJID.

NOISE MITIGATION MEASURES

1. Noise impacts resulting from project construction shall be minimized by restricting hours of operation of noise-generating equipment in the vicinity of residences to 7:00 a.m. to 10:00 p.m. Monday through Friday, to 7:00 a.m. to 6:00 p.m. on Saturday and Sunday.

PUBLIC SERVICE MITIGATION MEASURES

1. The contractor shall fence and monitor vulnerable equipment and materials storage areas during construction as required to prevent theft and vandalism and to reduce calls for assistance from the County Sheriff.

TRANSPORTATION AND TRAFFIC MITIGATION MEASURES

1. The contractor shall develop and implement a Traffic Control Plan that addresses the potential traffic conflicts associated with the project, including traffic control requirements, resident notification, access restoration, and the availability of parking facilities. Preparation and implementation of the Traffic Control Plan shall be coordinated with the San Joaquin County Public Works Department.

UTILITIES AND SERVICE SYSTEM MITIGATION MEASURES

1. Existing utilities shall be located and incorporated in project plans.

2. Project design shall enable construction of the planned improvements to occur without damage to existing utilities. Should utility conflicts be unavoidable, project plans and specifications shall provide for relocation or reconstruction of existing utilities as required.

3. The project contractor shall consult with Underground Service Alert (USA) prior to underground construction. Utilities shall be marked as required to avoid accidental damage and service interruption.

Sam Bologna 8/20/09

Sam Bologna, Engineering Department Manager — Date

Chapter 1
Introduction to Initial Study

Project Brief

The proposed Irrigation Enhancement Project involves the installation and operation of a new pressurized irrigation water supply system. The proposed pressurized system would provide improved agricultural irrigation service to approximately the 3,800 acres of currently flood-irrigated agricultural land that creates is part of SSJID's Division 9.

The proposed system would include 12.6 linear miles of underground pressurized PVC pipeline, and two storage basins totaling 12.6 acres, each equipped with a pump station and groundwater well. Proposed pipelines would be located adjacent to the SSJID's existing gravity irrigation pipeline system; most of this system is located along existing public and within disturbed agricultural access roads. The proposed storage basins located at the eastern and western portions of the project would provide approximately 80 acre-feet of storage and occupy a total footprint area of 12.6 acres.

Purpose of Initial Study

The California Environmental Quality Act (CEQA) requires that public agencies document and consider the potential environmental effects of any agency actions that meet CEQA's definition of a "project;" briefly summarized, a "project" is an action that has the potential to result in direct or indirect physical changes in the environment. A project includes the agency's direct activities as well as activities that involve public agency approvals or funding. Guidelines for an agency's implementation of CEQA are found in the "CEQA Guidelines" (Title 14, Chapter 3 of the California Code of Regulations).

Provided that a project is not found to be exempt from CEQA, the first step in the agency's evaluation of the potential environmental effects of the project is the preparation of an Initial Study. The purpose of an Initial Study is to determine whether the project would involve "significant" environmental effects as defined by CEQA and to describe feasible mitigation measures that would be necessary avoid the significant effects or reduce them to a less than significant level. In the event that the Initial Study does not identify significant effects, or identifies mitigation measures that would reduce all of the significant effects of the project to a less than significant level, the agency may prepare a Negative Declaration. If this is not the case, the agency must prepare an Environmental Impact Report (EIR); the agency may also decide to proceed directly with the preparation of an EIR without preparation of an Initial Study.

The proposed Division 9 Irrigation Enhancement Project is a "project" as defined by CEQA and is not CEQA-exempt. SSJID has determined that the project involves the potential for significant environmental effects. The purpose of this Initial Study is to describe the proposed project, briefly describe the environmental setting of the project, discuss the potential environmental effects of the project, and identify mitigation measures needed to reduce the potentially significant environmental effects of the project to a less than significant level. The Initial Study finds that, with proposed mitigation measures, the

project would not result in a significant effect on the environment, and a Mitigated Negative Declaration was prepared.

A Public Review Draft of the Initial Study/Mitigated Negative Declaration (IS/MND) for the project was circulated for agency and public review during July and August, 2009. Comments received were considered by SSJID staff, and any required changes to the IS/MND are reflected in this Final IS/MND. The comments received are on file at the SSJID offices. The Final IS/MND will be considered by the SSJID Board of Directors before the Board makes its decision on the project.

Revisions to the Public Review Draft IS/MND are shown in this and following sections in underline and strikeout text. Changes to the IS/MND make corrections to the document, clarify and expand the analysis of environmental effects and add mitigation measures that would benefit the environment. None of the changes to the IS/MND involve a substantial change in the Project Description, the identification of new significant environmental effects, or the description of significant effects that are substantially more severe than were identified in the Public Review Draft IS/MND.

Scope of Initial Study

This Initial Study evaluates the project's potential to result in "significant" environmental effects, as defined by CEQA, in the following issue areas. Where feasible mitigation measures that would avoid or reduce significant effects, they are identified, and the level of significance of the environmental effect, with the application of the mitigation measure(s) is identified.

Aesthetics
Agricultural Resources
Air Quality
Biological Resources
Cultural Resources
Geology and Soils
Hazards and Hazardous Materials
Hydrology and Water Quality
Land Use and Planning
Mineral Resources
Noise
Population and Housing
Public Services
Recreation
Transportation/Traffic
Utilities and Service Systems
Global Climate Change
Mandatory Findings of Significance

Environmental Evaluation Checklist Terminology

The potential environmental effects of the proposed project are evaluated in Chapter 3 of this document, which is the Environmental Evaluation Checklist. The checklist includes a list of environmental considerations against which the project is evaluated. For each question, the agency determines whether the project would involve: 1) No Impact, 2) a Less Than Significant Impact, 3) a Less Than Significant Impact With Mitigation Incorporated, or 4) a Potentially Significant Impact.

A Potentially Significant Impact occurs when there is substantial evidence that the project would involve a substantial adverse change to the physical environment, i.e. that the environmental effect may be significant, and mitigation measures have not been defined that would reduce the impact to a less than significant level. If there are one or more Potentially Significant Impact entries in the Initial Study, an EIR is required.

A Less Than Significant Impact occurs when the project would involve effects on a particular resource, but the project would not involve a substantial adverse change to the physical environment, and no mitigation measures are required.

An environmental effect that is Less Than Significant With Mitigation Incorporated is a Potentially Significant Impact that can be avoided or reduced to a less than significant level with the application of mitigation measures.

A determination of No Impact is self-explanatory.

Initial Study Organization

Chapter 1, this Introduction, briefly summarizes the project, the purposes of the Initial Study, the terminology used in the Initial Study, and the organization of the document. A summary of the potential environmental effects of the project is shown at the end of the chapter.

Chapter 2, Project Description, describes the proposed development project, its location, road and utility requirements required to serve the project, and required permits and approvals.

Chapter 3, the Environmental Checklist, contains the environmental evaluation of the project in the environmental issue areas described above.

Chapter 4, Resources, lists the documents cited and the persons consulted in the preparation of this Initial Study, and identifies the preparers of this document.

Summary of Environmental Effects and Mitigation Measures

The following pages contain Table 1-1, Summary of Impacts and Mitigation Measures. The table is drawn from the Environmental Checklist Form shown in Chapter 3.

The potential environmental impacts of the proposed project are summarized in the left-most column of this table. The level of significance of the impact is indicated in the second column, mitigation measures proposed to minimize the impacts are shown in the third column, and the significance of the impact, after mitigation measures are applied, is shown in the fourth column.

TABLE 1-1

SUMMARY OF IMPACTS AND MITIGATION MEASURES

Potential Impact	Significance Before Mitigation Measures	Mitigation Measures	Significance After Mitigation
1. AESTHETICS			
Overall Aesthetic Effects of Project Construction and Operation	LS	None required	
Light and Glare Effects	LS	None required	
2. AGRICULTURE			
Impacts on Agricultural Lands and Agriculture	LS	None required	
Project Impacts on Williamson Act Contracts	LS	None required	
3. AIR			
Construction Fugitive Dust Emissions	PS	1. The contractor shall comply with all applicable requirements of SJVAPCD Regulation VIII, including compliance with the following mitigation measures 2 through 10~~9~~. 2. Visible Dust Emissions (VDE) from construction, demolition, excavation or other earthmoving activities related to the project shall be limited to 20% opacity or less, as defined in Rule 8011, Appendix A. The dust control measures specified in mitigations 3 through 9 shall be applied as required to maintain the VDE standard. 3. Pre-water all land clearing, grubbing, scraping, excavation, land leveling, grading, cut and fill, and demolition activity sites and phase earthmoving 4. Apply water, chemical/organic stabilizer/suppressant, or vegetative ground cover to all disturbed areas, including unpaved roads. 5. Restrict vehicular access to the disturbance area during periods of inactivity. 6. Apply water or chemical/organic stabilizers/suppressants, construct wind barriers and/or cover exposed potentially dust-generating materials. 7. When materials are transported off-site, stabilize and cover all materials to be transported and maintain six inches of freeboard space from the top of the container. 8. Remove carryout and trackout of soil materials from paved roads on a daily basis unless it extends more than 50 feet from site; carryout and trackout extending more than 50 feet from the site shall be removed immediately. The use of dry rotary brushes is expressly prohibited except where preceded or accompanied by sufficient wetting to limit the visible dust emissions. Use of blower devices is expressly forbidden. ~~If the project would involve more than 150 construction vehicle trips per day onto the public street, additional restrictions specified in Section 5.8 of Rule~~	LS

TABLE 1-1

SUMMARY OF IMPACTS AND MITIGATION MEASURES

Potential Impact	Significance Before Mitigation Measures	Mitigation Measures	Significance After Mitigation
		~~8041 will apply.~~ 9. Traffic speeds on unpaved roads shall be limited to 15 mph. 10. The contractor shall submit a Dust Control Plan to the SJVAPCD for approval prior to beginning of demolition or construction, as required by SJVAPCD Rule 8021, and shall implement said plan during demolition and construction.	
Ozone Precursor and Other Emissions from Construction Equipment	LS	None required	
Project Operation Emissions	LS	None required	
Carbon Monoxide Emissions	LS	None required	
Toxic Air Contaminants and Odor Impacts	LS	None required	
4. BIOLOGICAL RESOURCES			
Project Impacts on General Biological Resource Values	LS	None required	
Project Impacts to Waters of the U.S. and Wetlands	PS	1. The drainage located north of Melton Road and parallel to the proposed pipeline alignment shall be fenced with a highly-visible fencing material during the construction period in order to prevent construction encroachment into this waterway.	LS
Project Impacts on Special-Status Species	PS	1. SSJID shall implement either Mitigation Measure #2 below, or Mitigation Measures 3, 4, ~~and~~ 5 and 6 below. 2. SSJID shall obtain coverage of the project by the San Joaquin County Multi-Species Habitat Conservation Plan (SJMSCP), including the payment of any required fee and the implementation of any required Incidental Take Minimization Measures. ITMMs specified by the San Joaquin County COG shall be observed by the SSJID contractors; or 3. SSJID shall retain a qualified biologist to conduct pre-construction surveys for nesting Swainson's hawks along the proposed pipeline alignments if construction occurs between March 1 and September 15. The survey should include all large trees visible from the alignment. If active nests are found, the qualified biologist should determine the need (if any) for temporal restrictions on construction.	LS

TABLE 1-1

SUMMARY OF IMPACTS AND MITIGATION MEASURES

Potential Impact	Significance Before Mitigation Measures	Mitigation Measures	Significance After Mitigation
		4. SSJID shall retain a qualified biologist to conduct pre-construction surveys of the project site for burrowing owls along the alignment if construction commences between February 1 and August 31. The survey should include the ruderal areas along the pipeline alignments, and all areas of open grassland visible from the alignment. If occupied burrows are found, a qualified biologist should determine the need (if any) for temporal restrictions on construction. 5. In the event any trees that need to be removed or trimmed to facilitate the project, they should be felled or trimmed outside of the general bird nesting season (February 1 through August 31) or SSJID shall have a nesting bird survey conducted immediately prior to tree trimming or removal. If active nests are found, tree felling or trimming should be delayed until the young have fledged. 6. SSJID shall implement the recommendations of the qualified biologist in Mitigation Measures 3 and 4.	
Effects of Project Construction on Oak Trees, Including Heritage Trees	LS	None required	
5. CULTURAL RESOURCES			
Impacts on Archaeological and Historical Resources	PS	1. If any subsurface cultural resources are encountered during construction of the proposed pipelines or storage basins, all construction activities in the vicinity of the encounter shall be halted until a qualified archaeologist can examine these materials and make a determination of their significance. SSJID and the contractor shall be responsible for mitigation of any significant cultural resources pursuant to the CEQA Guidelines. 2. If human remains are encountered at any time during the development of the project, all work in the vicinity of the find shall halt, and the County Coroner shall be notified immediately. The Coroner must contact the Native American Heritage Commission if the remains have been identified as being of Native American descent. At that time, the SSJID contractor shall retain a qualified archaeologist to evaluate the archaeological implications of the finds. The contractor shall conform to the requirements of the CEQA Guidelines if human remains are found to be of Native American origin.	LS
6. GEOLOGY AND SOILS			
Exposure of New Development to Geologic Hazards and Soil Constraints	LS	None required	

TABLE 1-1

SUMMARY OF IMPACTS AND MITIGATION MEASURES

Potential Impact	Significance Before Mitigation Measures	Mitigation Measures	Significance After Mitigation
7. HAZARDS AND HAZARDOUS MATERIALS			
Exposure of Construction Workers to Environmental Contamination Associated with Adjacent or Nearby Land Uses	PS	1. If evidence of unusual odors or soil discoloration is noted during construction, construction shall be halted. The SSJID contractor shall contact a qualified environmental professional to evaluate the situation and take or dictate action as required by applicable regulations.	LS
Use of Hazardous Materials During Construction	PS	1. The contractor shall prepare and implement a hazardous materials spill plan for the project. The spill plan shall identify the level of worker training and supplies of spill containment and cleanup materials needed to respond to potential hazardous materials spills that could occur in conjunction with the project.	LS
Interference with Emergency Evacuation Plans	PS	1. Project construction will be coordinated with the emergency response agency with responsibility for the area if construction will require partial public street closure	LS
8. HYDROLOGY AND WATER QUALITY			
Direct Effects of the Project on Surface Waters	LS	None required	
Project Effects on or Exposure to Flooding	LS	None required	
Project Impacts on Surface Water Quality	PS	1. The contractor shall prepare and implement a Storm Water Pollution Prevention Plan (SWPPP) for the project and file a Notice of Intent (NOI) with the Regional Water Quality Control Board prior to commencement of construction activity. The SWPPP shall be available on the construction site at all times. 2. Project plans shall incorporate an Erosion Control Plan consistent with all applicable provisions of the SWPPP. 3. The contractor shall submit the RWQCB Waste Discharger's Identification Number (WDID) to SSJID.	LS
9. LAND USE AND PLANNING			
Project Impacts on Land Use	LS	None required	
General Plan and Zoning Consistency	LS	None required	
Potential Land Use Conflicts Associated with the Project	LS	None required	
10. MINERAL RESOURCES			
Project Effects on Mineral Resources	LS	None required	

TABLE 1-1

SUMMARY OF IMPACTS AND MITIGATION MEASURES

Potential Impact	Significance Before Mitigation Measures	Mitigation Measures	Significance After Mitigation
11. NOISE			
Construction Noise Impacts	PS	1. Noise impacts resulting from project construction shall be minimized by restricting hours of operation of noise-generating equipment in the vicinity of residences to 7:00 a.m. to 10:00 p.m. Monday through Friday, to 7:00 a.m. to 6:00 p.m. on Saturday and Sunday.	LS
Noise Associated with Operation of Proposed Facilities	LS	None required	
12. POPULATION AND HOUSING			
Impacts on Population and Housing	LS	None required	
13. PUBLIC SERVICES/FACILITIES			
Project Impacts on, Police Protection Services	PS	1. The contractor shall fence and monitor vulnerable equipment and materials storage areas during construction as required to prevent theft and vandalism and to reduce calls for assistance from the County Sheriff.	LS
Impact of New Development on Fire Protection Services	LS	None required	
Project Impacts on Schools	LS	None required	
Project Impacts on Parks and Recreation	LS	None required	
Project Impacts on Solid Waste	LS	None required	
14. RECREATION			
Project impacts on Recreation.	LS	Issues associated with recreation have been addressed in the "Parks and Services" portion of Section 13 Public Services/Facilities, above.	
15. TRANSPORTATION/CIRCULATION			
Project Effects on Existing Streets	PS	1. The contractor shall develop and implement a Traffic Control Plan that addresses the potential traffic conflicts associated with the project, including traffic control requirements, resident notification, access restoration, and the availability of parking facilities. Preparation and implementation of the Traffic Control Plan shall be coordinated with the San Joaquin County Public Works Department.	LS

TABLE 1-1

SUMMARY OF IMPACTS AND MITIGATION MEASURES

Potential Impact	Significance Before Mitigation Measures	Mitigation Measures	Significance After Mitigation
16. UTILITIES/SERVICES SYSTEMS			
Project Demands for Utility Services	LS	None required	LS
Project Impacts on Existing Underground and Overhead Utilities	PS	1. Existing utilities shall be located and incorporated in project plans 2. Project design shall enable construction of the planned improvements to occur without damage to existing utilities. Should utility conflicts be unavoidable, project plans and specifications shall provide for relocation or reconstruction of existing utilities as required. 3. Project contractor shall consult with Underground Service Alert (USA) prior to construction. Utilities shall be marked as required to avoid accidental damage and service interruption.	LS
Project Impacts on Solid Waste	LS	None required.	
17. GLOBAL CLIMATE CHANGE			
Project Impacts on Global Climate Change	LS	None required	
18. MANDATORY FINDINGS OF SIGNIFICANCE			
Mandatory Findings of Significance	LS	None	

Chapter 2.0
Project Description

This chapter of the Initial Study provides a brief summary description of the proposed project followed by project setting, background information and detailed descriptions of the location and physical elements of the project.

Project Brief

The proposed Irrigation Enhancement Project involves the installation and operation of a new pressurized irrigation water supply system. The proposed system would provide improved agricultural irrigation service to approximately~~the~~ 3,800 acres of currently flood-irrigated agricultural land that is part of SSJID's Division 9.

The proposed system would include 12.6 miles of underground pressurized PVC pipeline, and two storage basins totaling 12.6 acres, each of which would be equipped with a pump station and groundwater well. Proposed pipelines would be located adjacent to the SSJID's existing gravity irrigation pipeline system; most of this system is located along existing public roads and within disturbed agricultural access roads. The proposed storage basins located at the eastern and western portions of the project would provide approximately 80 acre-feet of storage and occupy a total footprint area of 12.6 acres.

Project Location

The area to be served by the proposed project and the location of the project is a Division 9 of the existing SSJID irrigation system. The Division boundary, which encompasses approximately 3,800 acres, is shown on Figures 2-3 and 2-6. SSJID's Division 9 comprises approximately 9,640 acres located in the southern most portion of the District, in the vicinity of the Stanislaus River, east and west of the City of Ripon. The 3,800-acre project area is a portion of Division 9; the project area includes the westernmost portion of Division 9, which is located south of SR 99, south of West Ripon Road, west of the City of Ripon, and east of Manteca Road in the unincorporated area of San Joaquin County. ~~Division 9 is located west of the City of Ripon and approximately 1.5 miles southwest of SR 99 in unincorporated San Joaquin County.~~

The 3,800-acre project area consists of lands located generally west of Mohler Road, south of West Ripon Road, east of Manteca Road, and north of the Stanislaus River. The proposed new pressure pipelines would be installed adjacent to elements of the existing SSJID gravity system; these lines are shown on Figure 2-6. The existing gravity system is for the most part located within existing SSJID rights-of-way, which for the most part follow public roads and existing farm roads. The proposed pipeline alignments would be adjacent to, and/or cross portions of Lyons Road, Hutchinson Road, Kincaid Road, Melton Road, Moncure Road, Frederick Avenue, Curtis Avenue, Austin Road and Brady Road (Figure 2-6). The proposed alignment would also include portions of several unnamed agricultural roads.

The site is located within Sections 26, 27, 28, 33, 34, 35, and 36, T2S, R7E, MDBM. The site is shown on the US Geological Survey 7.5-minute Ripon quadrangle map (Figure 1-3, USGS Map).

Project Setting and Background

SSJID was formed in 1909 to provide a reliable and economical source of irrigation water for the agricultural areas surrounding the cities of Escalon, Ripon, and Manteca in southern San Joaquin County. SSJID water supplies are derived from existing diversion and storage rights on the Stanislaus River. Agriculture in Division 9 is composed primarily of almond orchards and row crops.

SSJID provides irrigation service to Division 9 via an existing gravity flood irrigation System that dates to the formation of the District; existing irrigation lines and valve systems are operated manually. Flood irrigation service within Division 9 is obtained by operating these valves, which allow irrigation waters to flow across the ground surface into the adjoining orchards. Storm water and excess irrigation water within Division 9 are currently either left to percolate into the soil, or are collected in the gravity system and discharged, under permit, into the Stanislaus River.

Increasingly, landowners within Division 9 are becoming interested in sprinkler or drip irrigation systems in order to expand the range of agricultural products, increase efficiency and reduce operation and maintenance costs. To generate this service presently, farmers must access groundwater at individual wells, or install and operate pumps and filtration systems to deliver the required quantities of water to the orchard or vineyard at the required pressure. Many of these individual systems are diesel-powered, which generate air emissions and are costly to operate and maintain.

Project Objectives

The purpose of the proposed project is to develop an alternative irrigation system that meets landowner needs while increasing the water- and energy-efficiency of agriculture in portions of Division 9. If proven successful, the project may serve as a model for other similar improvements in the District.

The proposed irrigation system would provide several benefits over the existing gravity system. The uniformly-pressurized system would allow farmers to abandon individual groundwater wells and diesel-powered pumps; it is believed that conversion of the many existing and future individual systems to the central system provided by the project will result in net gains in energy efficiency as well as beneficial groundwater and air quality impacts. Pressurized sprinkler and drip irrigation systems are able to serve the same area as flood irrigation using substantially less water. Sprinkler irrigation systems also allow for more precise, and therefore less, agricultural chemical application. The proposed system is also designed to recapture agricultural drainage to the west storage basin; these waters can then be pumped back into the system reducing or eliminating existing discharge of agricultural drainage to the Stanislaus River.

The proposed centralized irrigation system is expected to provide increased energy and water efficiency and allow for uniform distribution of irrigation water to Division 9 lands at a much lower cost per ~~gallon~~ acre-foot than is currently possible.

Project Entitlements

The proposed project has been initiated by the Lead Agency, which is the SSJID. The primary entitlement required to permit the project is the approval of the SSJID Board of Directors.

Construction of pipeline crossings of existing public roads would require one or more encroachment permits from San Joaquin County.

The project would involve no other known entitlements.

Development Details

System Description

The proposed project is the construction and operation of a pressurized irrigation water system serving 3,800 acres of lands within SSJID Division 9. The proposed water system would consist of a network of pressure pipeline and two water storage basins, each of which would be individually equipped with a pump station and groundwater well.

The proposed project would be supplied by SSJID's existing surface water supply; these waters are currently distributed to Division 9 as flood irrigation water by an existing gravity system. Inflow to Division 9 would be redirected into the proposed eastern storage basin. Two sets of pumps at this basin, pressurized system pumps and low-head flood system pumps, would direct water into the proposed pressue system and/or the existing gravity system as demand warrants. The proposed groundwater well would supplement surface water supplies when necessary.

The proposed pressure system would distribute water to ~~Division 9~~ users in the project area through 12.6 miles of 18- and 24-inch pressure pipeline. The proposed pressure system would be used for irrigation purposes during the summer. ~~and potentially for frost protection during the winter.~~

The proposed western storage basin would be supplied by capture of agricultural runoff generated during the irrigation season and storm runoff. The pump station at the western basin would return accumulated irrigation runoff to the pressure system, recycling this water, which was formerly discharged to the Stanislaus River. The western pump station would also help maintain system pressure in the western portion of the project. A groundwater well at the western pond would supplement basin storage as required during the irrigation season. ~~and provide a source of water when the pressurized system is needed for frost protection in the winter.~~

Groundwater wells at both the east and west basins would provide supplemental groundwater to the proposed pressure system during the occasional dry year when surface water supply is not adequate.

Eastern Storage Basin

The eastern storage basin would encompass a footprint area of approximately 6.9-acres north of Mohler Road in the easternmost portion of the project area (Figure 2-6 Proposed Project). The basin is designed with a maximum capacity of 50 acre-feet at a maximum depth of 12 feet. The low operating level of the basin would be 10 acre-feet at a depth of 2.6 feet. The basin would be excavated 10 feet below ground level, and basin levees would rise four feet above ground level (Figure 2-7 Storage Basin Profiles).

Water in the eastern storage basin would be pumped into the either existing gravity system or the proposed pressure system, based on demand. Two groups of pumps are included in the project to meet these purposes; 1) low-head flood pumps, and 2) pressure system pumps. The low-head pumps are required to ensure adequate water head is available to the existing flood irrigation customers. These pumps would consist of three electrically operated 8,000-gpm (gallons per minute) pumps for a total of 24,000 gpm of capacity.

The pressure pump system would consist of a bank of six short-coupled turbine pumps. The first two primer pumps would have a capacity of 1,000 gpm each. These pumps would maintain the pressure throughout the entire system; operation of these pumps would shift from one to the other every 12 hours to allow maintenance and ensure reliability. The remaining four pumps in the pressure system would be powered on in sequence as demand requires, and will have variable frequency electrical control enabling them to "ramp" up or down to their maximum capacity based on the demand on serviceability and the system. When the system demand forces a pump to exceed its maximum capacity, the next pump in line will be triggered to come on-line. The pressurized system is designed to pump a maximum capacity of 12,000 gpm or 46 cfs.

Western Storage Basin

The western storage basin would receive agricultural runoff waters conveyed in the existing gravity system. The basin would have a maximum capacity of 30 acre-feet at a proposed depth of 10 feet. The low operating level of the basin would be 10 acre-feet at a depth of 3.6 feet. The basin would be excavated four feet below ground level and basin levees would rise eight feet above the existing ground level (Figure 2-7 Storage Basin Profiles).

The western storage basin will have a pumping system designed to enhance pressure in the western portion of the project and reduce pipe size requirements. The pump station would consist of three pumps with flows of 1,000, 2,500 and 3,000 gpm, respectively. The first two pumps would have variable control drive panels to ensure efficiency and reliability to the system. This storage basin includes an outlet to release excess drainage to the Stanislaus River when needed; future discharges are, however, expected to be much lower than currently.

Groundwater Wells

Groundwater wells would be located at both the east and west basins. These wells would provide a supplemental water source when needed during normal operations, a primary supply during the occasional dry year when surface water supply is not adequate., ~~and water supply in the winter months for frost protection.~~

Pipeline Network Description

The proposed pipeline network would include three 24-inch PVC backbone pressure pipelines that would extend west from the eastern storage basin along existing SSJID easements and agricultural access roads. The backbone pipelines would be looped by 24-inch north-south line segments as shown on Figure 2-6. One loop of 18-inch pipeline would be located in the northeast portion of the project area.

Metered turnouts would be provided along all pipeline segment to allow individual agricultural properties to access pressurized irrigation water. The pipeline system would include a set of isolation and pressure valves for ease of maintenance and improved reliability.

The three east-west backbone pipelines are known as the northern, central and southern pressure pipelines; these pressure pipelines would total 61,600 linear feet of 24-inch PVC pipeline. The northeastern loop consists of 5,400 linear feet of 18-inch PVC pressure pipeline.

The north pressure pipeline would extend north from the eastern storage basin 4,000 feet along an unnamed farm road, then would turn west on the alignment of Lyons Road. This pressure pipeline would extend west for approximately 12,600 feet (2.4 miles), then south and west along unnamed farm roads to connect with the central pressure pipeline at Melton Road and the western storage basin.

The central pressure pipeline would extend west from the eastern storage basin along Hutchinson Road for 1.75-miles (9,300 feet) to Kincaid Road where the line would follow farm roads in a westerly direction approximately 6,200-feet to and along Melton Road to along the western storage basin.

The southern pressure pipeline would be located almost entirely along unnamed farm roads. The southern line would extend 4,000-feet south from the eastern storage basin in an unnamed farm road across Moncure Road, then west for 7,200 feet (1.35 miles) across Austin Road, and then finally north 4,000 feet (0.75 miles) across Melton Road to connect with the central pressure pipeline in the Hutchinson Road alignment.

The proposed pipelines would be located primarily within existing SSJID easements, which are adjacent to public roads or within unpaved agricultural access roads located among the active orchards and other agricultural land that make up Division 9. The proposed pipelines would be placed adjacent to existing SSJID gravity pipelines within the existing easements. Adjacent placement will allow for convenient point of discharge for pressure relief valves, as discussed below.

Two portions of the proposed pipeline system will require new right-of-way; these sections are 1) north of Melton Road in the western portion of the proposed system, and 2) the west section of the 18-inch loop pipeline. These 3,000 linear feet of pipeline would require new right-of-way acquisition along existing agricultural access roads (Figure 2-6).

The proposed pipeline system would require a number of isolation valves and pressure relief valves. Isolation valves would be located at all intersections of the backbone pipelines; these valves would enable sections of the pipeline to be shut down for repairs and maintenance without taking the entire system out of service. Pressure relief valves would be installed along the pressurized pipeline at locations that coincide with vents on the existing gravity pipeline. These valves will allow for the release of water when there is excess pressure in the system; water will be released into the existing gravity pipeline system and recaptured at the west storage basin.

Pressurized irrigation water would be provided to individual parcels at metered turnouts. For parcels adjacent to the backbone line, metered turnouts would be installed at locations that best serve the irrigation needs of the parcels, as discussed with individual property owners. Parcels or groups of parcels not adjacent to the "backbone" system would be provided with a tee from the backbone system; property owners would be responsible for extending a spur line from the backbone tee to their individual properties and providing metering systems. Metering systems would include automatic flow meters, check valves, and a pressure transducer to relay information back to SSJID central control facilities.

Construction Activity

Construction of the two proposed storage basins will involve a total land disturbance of 12.6 acres. The basins would be constructed using traditional methods, that is excavation with excavators, then placement and compaction of the excavated soil to form the basin levees. The slopes of both basins would be 2:1, and would have continuous 18 foot-wide roadways along the top of each bank. The basins would be lined with an impermeable membrane to eliminate loss of water into the soil due to percolation. Pump stations and groundwater wells, would be housed in open-topped cast-in-place concrete structures ranging up to about 2,000 square feet in area.

Construction of proposed pipelines is expected to proceed conventionally, with trench excavation by backhoe or excavator, bedding and pipeline placement, and backfill of the trench. Soil excavated from trenches would be replaced in the trench; excess soil would be spread within the available easement area, and the construction area would be restored to existing conditions. Proposed pipelines would be placed with a minimum cover depth of three feet. Construction is anticipated to proceed quickly, approximately 500 to 1,000 linear-feet per day.

The proposed pipeline would require 15 crossings of existing public roadways. These project segments would also be constructed using conventional open trench construction, but pavement sawing, removal and replacement would be necessary where the alignment crosses a paved road. Temporary patching or repair of the pavement will occur immediately following line placement to restore normal use of the street. Permanent

pavement treatment will follow completion of construction. Pipelines would be placed below street grade with a minimum cover depth of three feet. Due to the rapid progress or pipeline construction, crossings of public roads would require only temporary lane closures and detours; road closures would not be necessary.

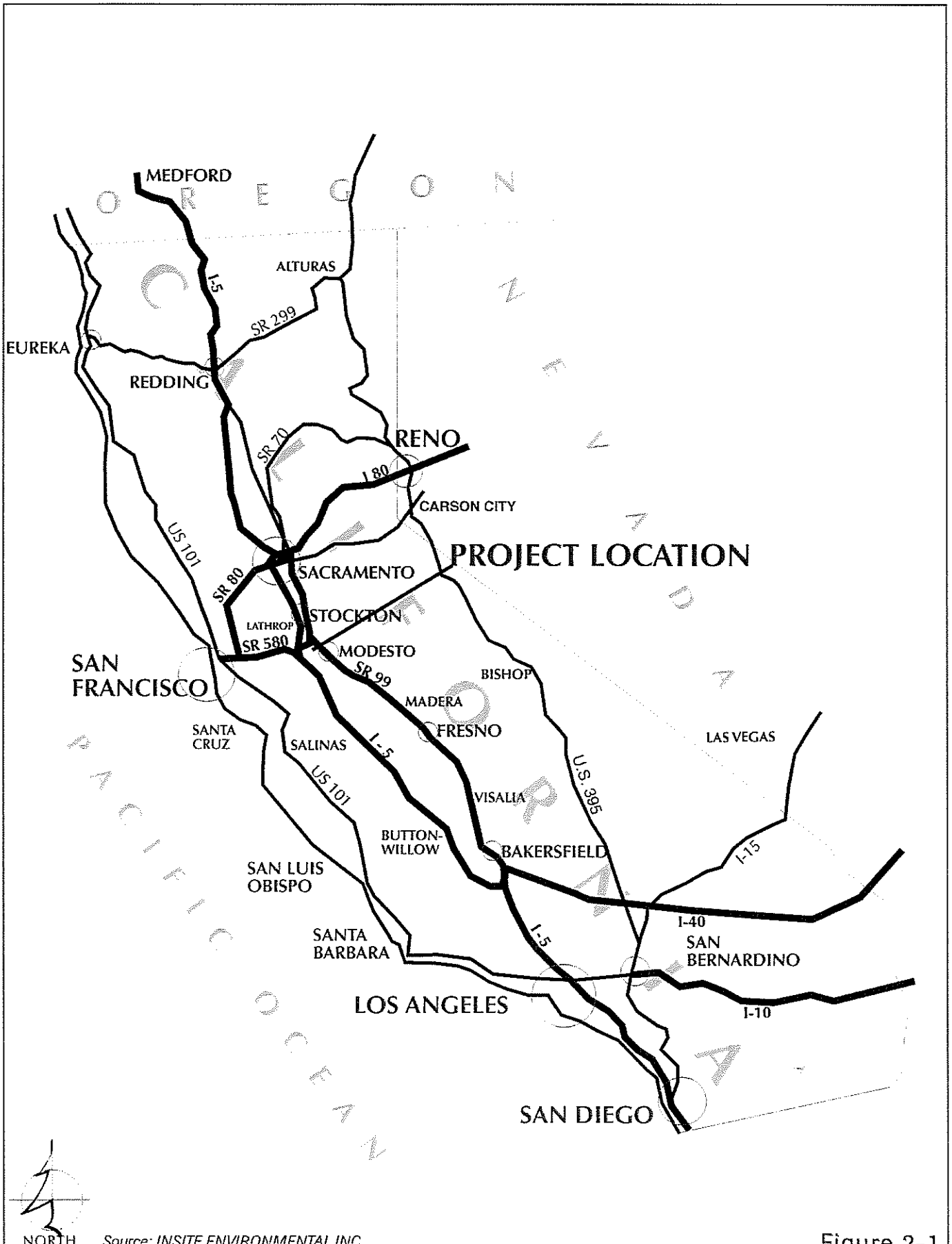

Source: INSITE ENVIRONMENTAL,INC.

INSITE ENVIRONMENTAL, INC.

Figure 2-1
REGIONAL MAP

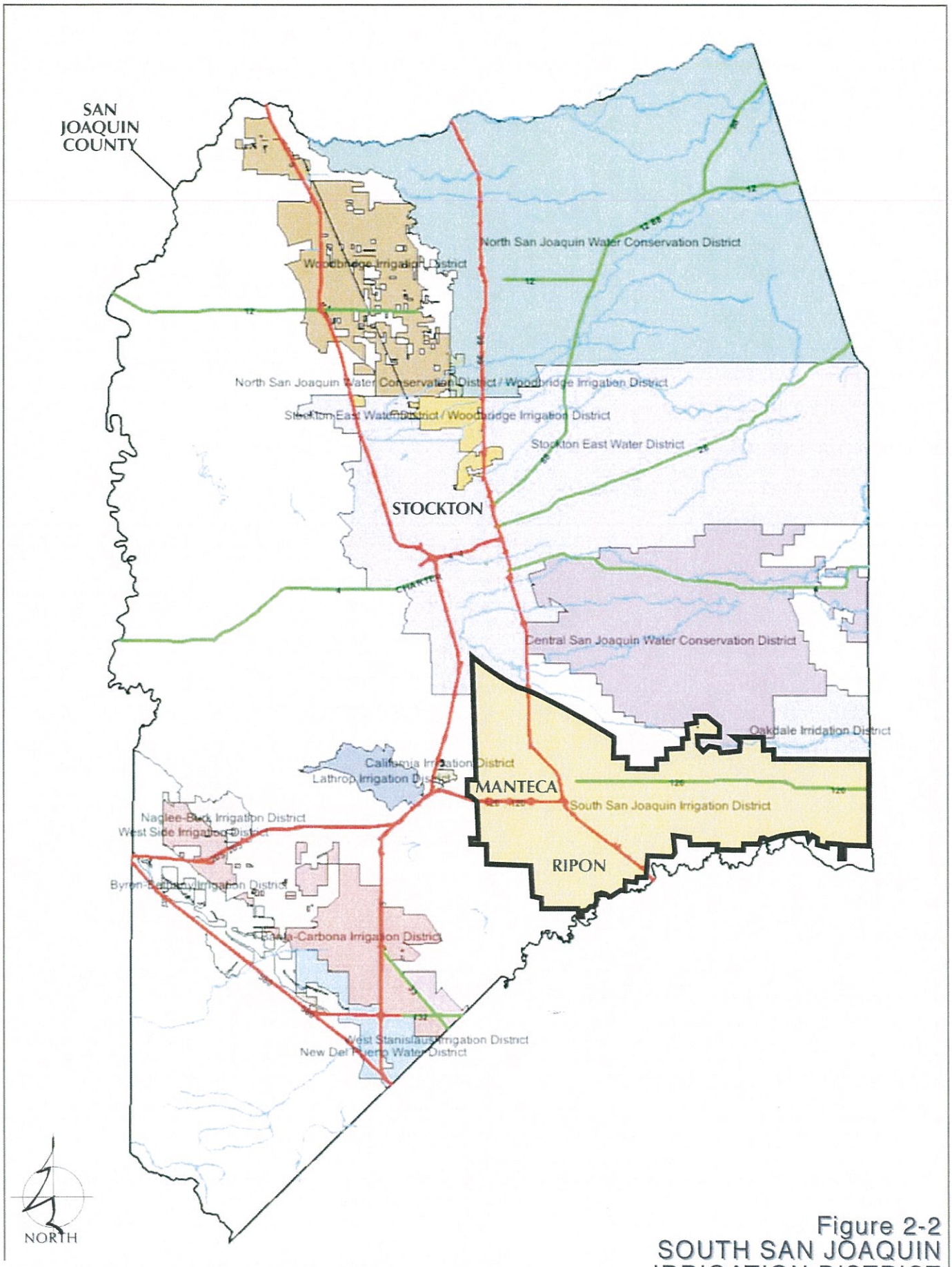

Figure 2-2
SOUTH SAN JOAQUIN IRRIGATION DISTRICT

INSITE ENVIRONMENTAL, INC.

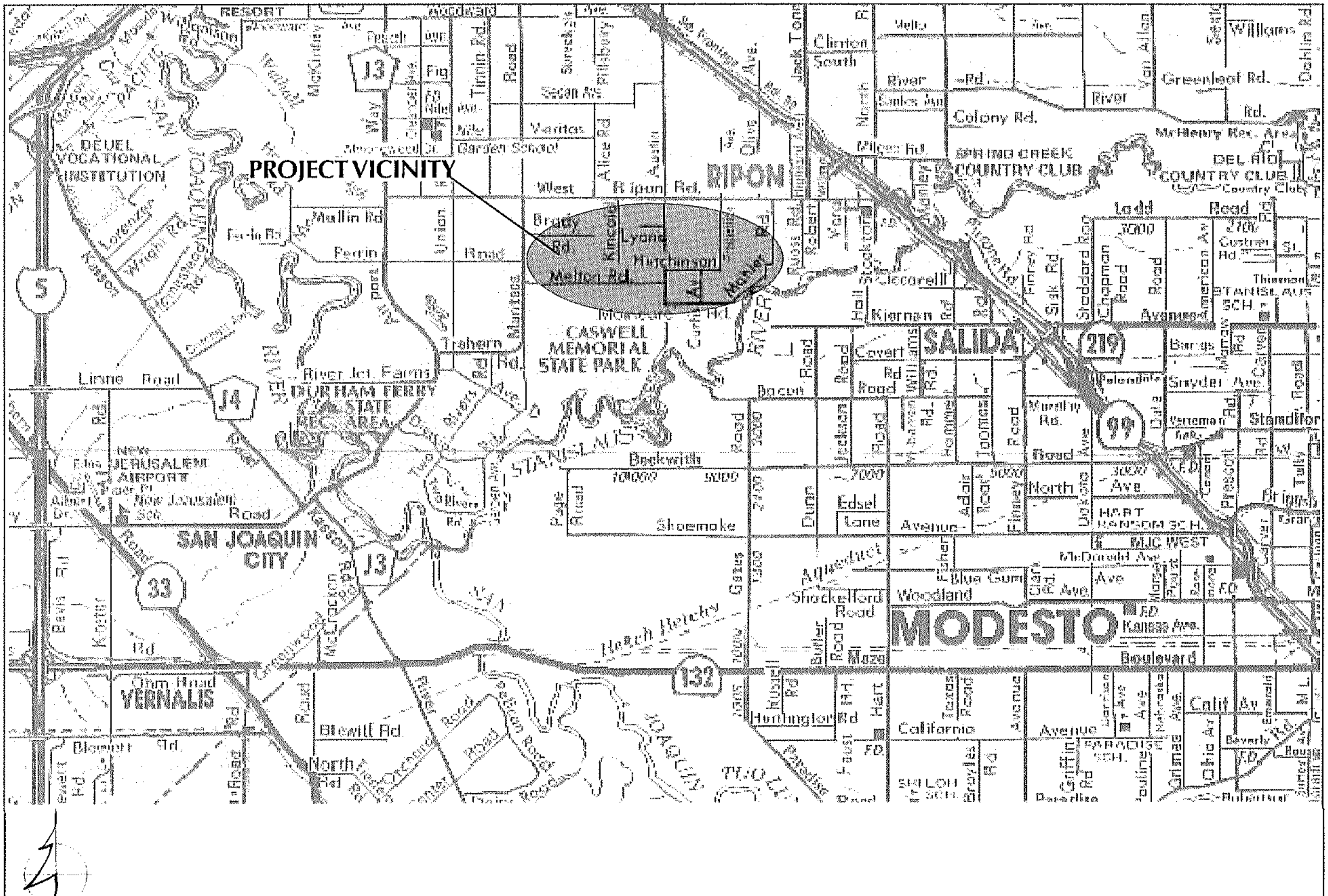

SOURCE: CITY OF RIPON CHAMBER OF COMMERCE MAP

INSITE ENVIRONMENTAL, INC.

Figure 2-3
VICINITY MAP

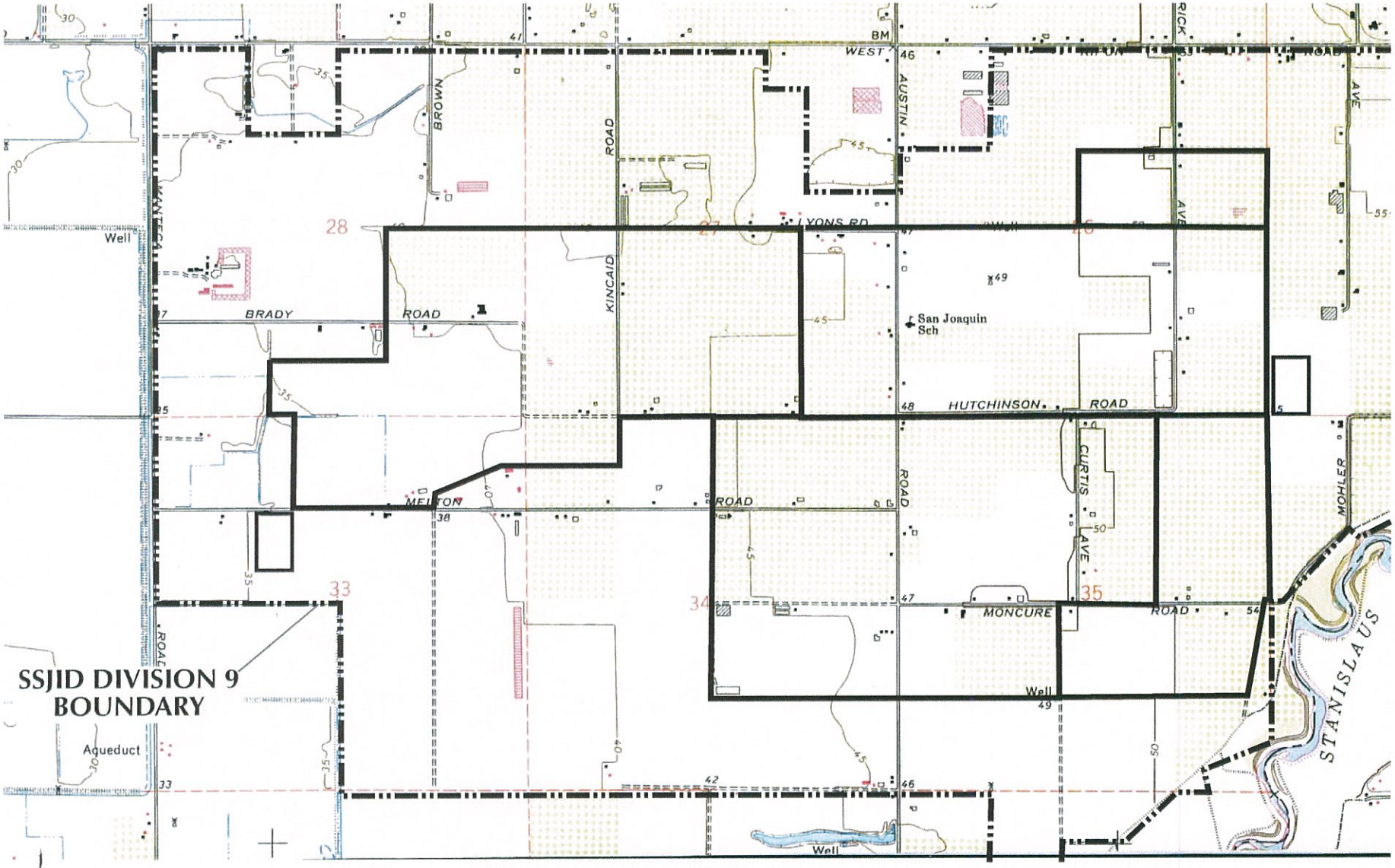

NORTH

SOURCE: USGS RIPON QUADRANGLE 7.5 MINUTE SERIES

LEGEND

PROPOSED PIPELINES

PROPOSED STORAGE POND

SSJID DIVISION 9 BOUNDARY

INSITE ENVIRONMENTAL, INC.

Figure 2-4
USGS MAP

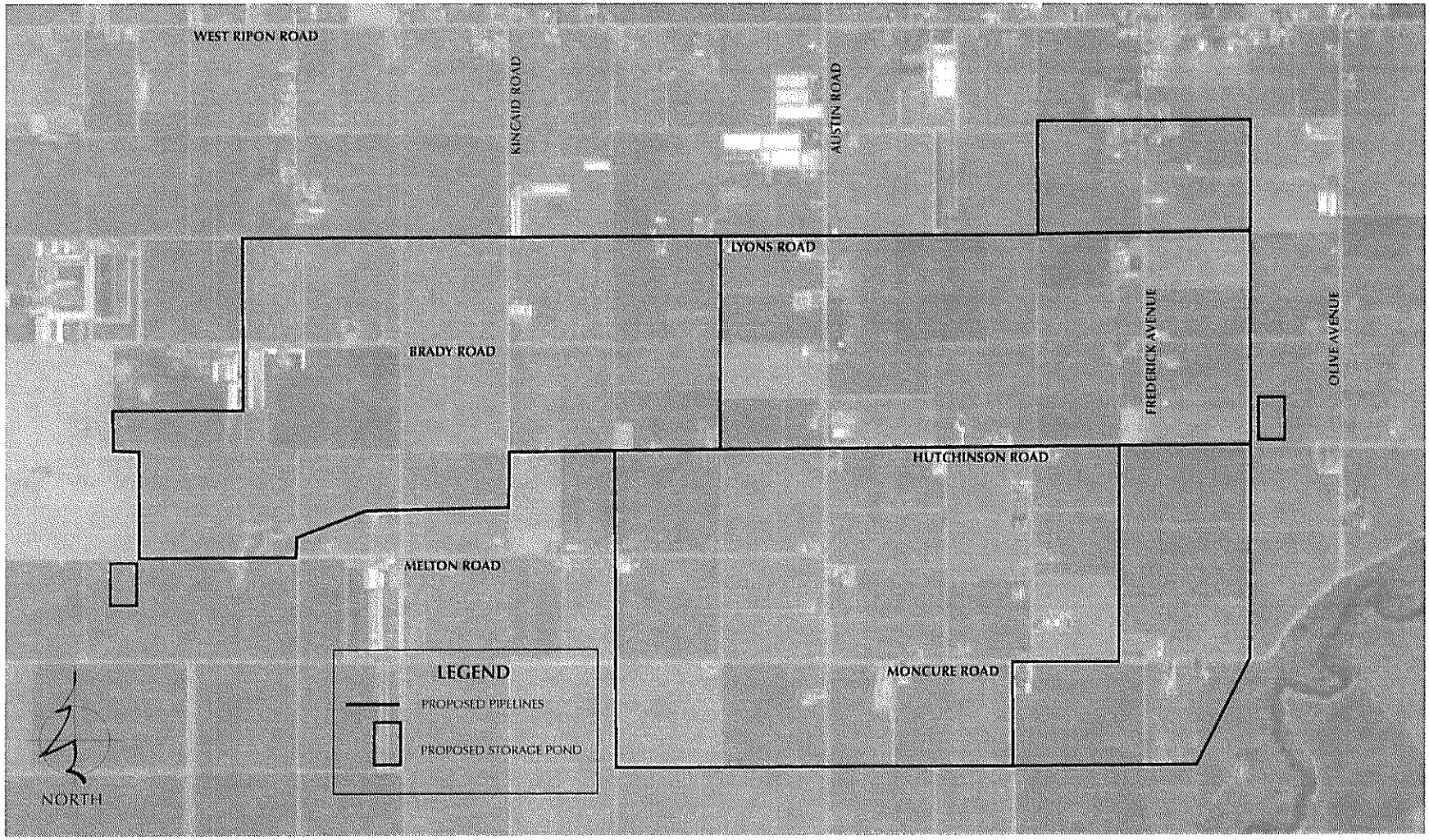

Source: GOOGLE EARTH

INSITE ENVIRONMENTAL, INC.

Figure 2-5
AERIAL PHOTO

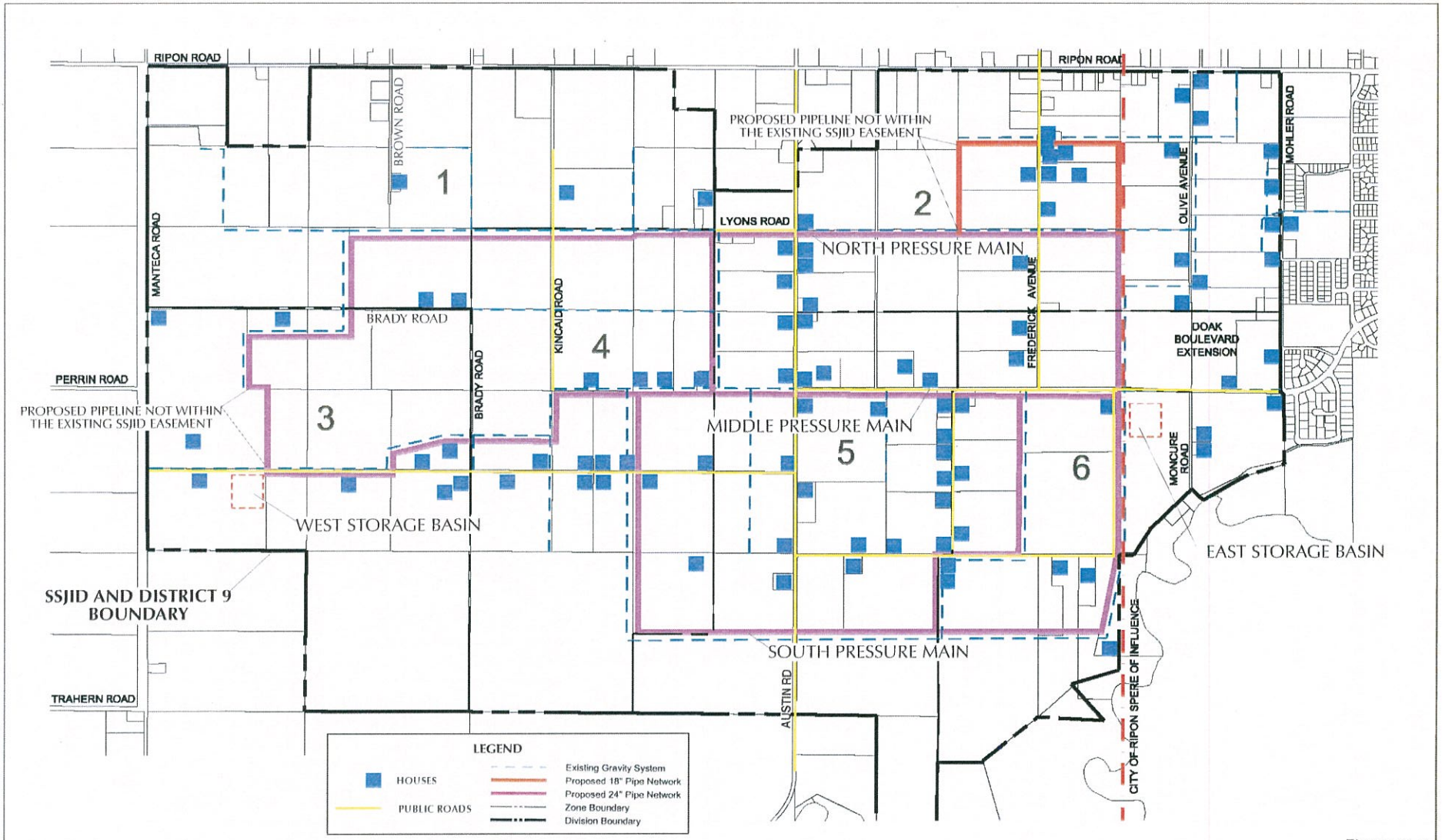

Source: STANTEC CONSULTING, INC.

INSITE ENVIRONMENTAL,

Figure 2-6
PROPOSED PROJECT

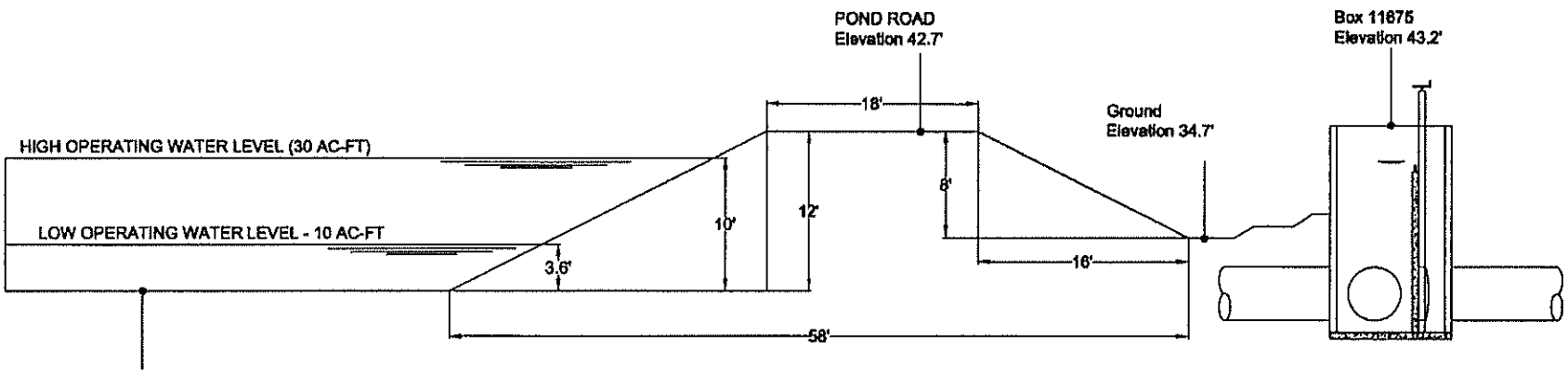

WESTERN STORAGE POND

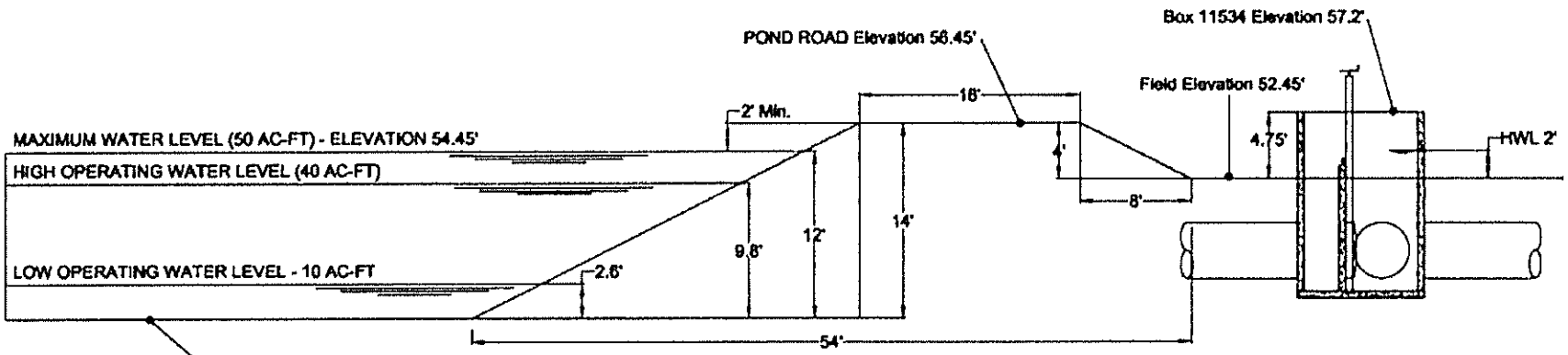

EASTERN STORAGE POND

NORTH *SOURCE: STANTEC*

INSITE ENVIRONMENTAL, INC.

Figure 2-7
STORAGE BASIN ELEVATIONS

GENERAL PROJECT DESCRIPTION:

1. Project Title:	SSJID Division 9 Irrigation Enhancement Project
2. Project Entitlements:	SSJID Board of Directors, Project Approval San Joaquin County, Road Encroachment Permits
3. Lead Agency Name and Address:	South San Joaquin Irrigation District 11011 E. Highway 120 Manteca, CA 95336
4. Contact Person and Phone Number:	Sam Bologna, Engineering Department Manager, (209) 249-4600
5. Project Location:	SSJID's Division 9 comprises approximately 9,640 acres located in the southern most portion of the District, in the vicinity of the Stanislaus River, east and west of the City of Ripon. The 3,800-acre project area is a portion of Division 9; the project area includes the westernmost portion of Division 9, which is located south of SR 99, south of West Ripon Road, west of the City of Ripon, and east of Manteca Road in the unincorporated area of San Joaquin County.. ~~The area to be served by the proposed project is approximately 3,800 acres comprising SSJID Division 9 (Figures 2-3, 2-6). Division 9 is located west of the City of Ripon and approximately 1.5 miles southwest of SR 99 in unincorporated San Joaquin County.~~ The project area portion of Division 9 is generally located west of Mohler Road, south of West Ripon Road, east of Manteca Road and north of the Stanislaus River. Proposed pipelines would be installed primarily adjacent to existing SSJID gravity lines as shown on Figure 2-6. Most of the existing gravity pipeline system is located within existing SSJID rights-of-way, which follow public roads and existing farm roads. New right-of-way acquisition would be required along two sections of pipeline totaling 3,000 linear feet. The proposed pipeline alignment would be adjacent to, and/or cross portions of Lyons Road, Hutchinson Road, Kincaid Road, Melton Road, Moncure Road, Frederick Avenue, Curtis Avenue, Austin Road and Brady Road. Two proposed storage basins would encompass a total of

12.6 acres in the eastern and western portions of the project. The eastern pond would be located adjacent to and northeast of the intersection of the western extension of Doak Boulevard and the eastern most north-south pipeline section.

The site is located within Sections 26, 27, 28, 33, 34, 35, and 36, T2S, R7E, MDBM. The site is shown on the US Geological Survey 7.5-minute Ripon quadrangle map (Figure 1-3, USGS Map).

6. Project Sponsor's Name and Address:	Same as lead agency.
7. General Plan Designation and Zoning:	The San Joaquin County General Plan designation for the project site and lands adjacent to the project site is General Agriculture (A/G). The site is zoned AG-40, General Agriculture District.
8. Surrounding Land Uses and Setting:	The project area is surrounded by agricultural land as associated rural residences, West Ripon Road, Manteca Road, the City or Ripon and the Stanislaus River are located at the fringes of Division 9.
9. Other public agencies whose approval is required:	San Joaquin County, Road Encroachment Permit

ENVIRONMENTAL FACTORS POTENTIALLY AFFECTED:

The environmental factors checked below would be potentially affected by this project, involving at least one impact that is a "Potentially Significant Impact" as indicated by the checklist on the following pages.

☐ Aesthetics	☐ Agriculture Resources	■ Air Quality
■ Biological Resources	■ Cultural Resources	☐ Geology /Soils
■ Hazards & Hazardous Materials	■ Hydrology/Water Quality	☐ Land Use/Planning
☐ Mineral Resources	■ Noise	☐ Population / Housing
■ Public Services	☐ Recreation	■ Transportation/Traffic
■ Utilities/Service Systems	☐ Mandatory Findings of Significance	

LEAD AGENCY DETERMINATION:

On the basis of this initial evaluation:

☐ I find that the proposed project COULD NOT have a significant effect on the environment and a NEGATIVE DECLARATION will be prepared.

■ I find that although the proposed project could have a significant effect on the environment there will not be a significant effect in this case because revisions in the project have been made by or agreed to by the project proponent. A MITIGATED NEGATIVE DECLARATION will be prepared.

☐ I find that the proposed project MAY have a significant effect on the environment, and an ENVIRONMENTAL IMPACT REPORT is required.

☐ I find that the proposed project MAY have a "potentially significant impact" or "potentially significant unless mitigated" impact on the environment, but at least one effect 1) has been adequately analyzed in an earlier document pursuant to applicable legal standards, and 2) has been addressed by mitigation measures based on the earlier analysis as described on attached sheets. An ENVIRONMENTAL IMPACT REPORT is required, but it must analyze only the effects that remain to be addressed.

☐ I find that although the proposed project could have a significant effect on the environment because all potentially significant effects (a) have been analyzed adequately in an earlier EIR pursuant to applicable standards, and (b) have been avoided or mitigated pursuant to that earlier EIR, including revisions or mitigation measures that are imposed upon the proposed project, nothing further is required.

Sam Bologna 8/20/09

Sam Bologna, Engineering Department Manager, SSJID — Date

EVALUATION OF ENVIRONMENTAL IMPACTS

The foregoing environmental determination is based on the evaluation of the potential environmental effects of the proposed project, as documented in the following checklist and supporting documentation. The checklist has been prepared in accordance with the following requirements:

1) A brief explanation is required for all answers except "No Impact" answers that are adequately supported by the information sources a lead agency cites in the parentheses following each question. A "No Impact" answer is adequately supported if the referenced information sources show that the impact simply does not apply to projects like the one involved (e.g., the project falls outside a fault rupture zone). A "No Impact" answer should be explained where it is based on project-specific factors as well as general standards (e.g., the project will not expose) sensitive receptors to pollutants, based on a project-specific screening analysis).

2) All answers must take account of the whole action involved, including off-site as well as on-site, cumulative as well as project-level, indirect as well as direct, and construction as well as operational impacts.

3) Once the lead agency has determined that a particular physical impact may occur, then the checklist answers must indicate whether the impact is potentially significant, less than significant with mitigation, or less than significant. "Potentially Significant Impact" is appropriate if there is substantial evidence that an effect may be significant. If there are one or more "Potentially Significant Impact" entries when the determination is made, an EIR is required.

4) "Less Than Significant With Mitigation Incorporated" applies where the incorporation of mitigation measures has reduced an effect from "Potentially Significant Impact" to a "Less Than Significant Impact." The lead agency must describe the mitigation measures, and briefly explain how they reduce the effect to a less than significant level (mitigation measures from Section XVII, "Earlier Analyses," may be cross-referenced .

5) Earlier analyses may be used where, pursuant to tiering, program EIR, or other CEQA process, an effect has been adequately analyzed in an earlier EIR or Negative Declaration. Section 15063(c)(3)(D). In this case, a brief discussion should identify the following:

   a) Earlier Analysis Used. Identify and state where the analysis(es) are available for review.

   b) Impacts Adequately Addressed. Identify which effects from the above checklist were within the scope of, and adequately analyzed in, an earlier document pursuant to applicable legal standards, and state whether such effects were addressed by mitigation measures based on the earlier analysis.

   c) Mitigation Measures. For effects that are "Less than Significant with Mitigation Incorporated", describe the mitigation measures which were incorporated or refined from the earlier document and the extent to which they address site-specific conditions for the project.

6) Lead agencies are encouraged to incorporate into the checklist references to information sources for potential impacts (e.g., general plans, zoning ordinances). Reference to a previously prepared or outside document should, where appropriate, include a reference to the page or pages where the statement is substantiated.

7) Supporting Information Sources: A source list should be attached, and other sources used or individuals contacted should be cited in the discussion.

8) This is only a suggested form, and lead agencies are free to use different formats.

9) The explanation of each issue should identify:

   a) the significance criteria or threshold, if any, used to evaluate each question; and

   b) the mitigation measure identified, if any, to reduce the impact to less than significance

ENVIRONMENTAL CHECKLIST AND NARRATIVE EXPLANATION

1. AESTHETICS -- Would the project:	Potentially Significant Impact	Less Than Significant With Mitigation Incorporated	Less Than Significant Impact	No Impact
a) Have a substantial adverse effect on a scenic vista?	☐	☐	☐	■
b) Substantially damage scenic resources, including, but not limited to, trees, rock outcroppings, and historic buildings within a state scenic highway?	☐	☐	☐	■
c) Substantially degrade the existing visual character or quality of the site and its surroundings?	☐	☐	■	☐
d) Create a new source of substantial light or glare which would adversely affect day or nighttime views in the area?	☐	☐	☐	■

NARRATIVE EXPLANATION

Environmental Setting

The proposed project is located within an agricultural area dominated by almond orchards. Views in the project area are generally limited in scope as a result of the flat topography and the view-confining effect of orchard development. Views are locally expansive in row crop areas and from linear features such as local roads and canal banks.

Proposed pipelines would be located primarily within disturbed agricultural access roads or disturbed areas adjacent to public roads.

Lands adjacent to the proposed pipeline alignments are orchards, active row crop lands, very low- density rural residential parcels or public roadways. Rural residential parcels adjacent to the proposed alignment are landscaped with ornamental trees and grasses. The agricultural nature of the area is illustrated in an aerial view of the project area (Figure 2-4).

The eastern proposed storage basin site is composed of almond orchards; views to and from this portion of the project area are limited in all directions by surrounding orchard development. The western storage basin site is in row crop use as are surrounding lands; expansive views are available from this site, and the site is visible directly from Melton Road.

There are no oak trees located on or adjacent to the proposed pipeline alignments.

There are no identified scenic resources, scenic vistas or scenic routes located in the vicinity of the proposed project site. There are no structures within the potential area of effect of the proposed project. There are no known historic buildings located adjacent to or near the pipeline alignments or proposed storage basin sites.

The rural, agricultural nature of the project~~Division 9~~ area results in very little night lighting and there are no major night lighting sources in the project vicinity. Night lighting is associated with the rural residential uses and public streets through which the project

alignment passes. Street lighting along County roads is sparse, confined primarily to intersections. Developed areas of the City of Ripon are located about 0.5 miles east of the nearest portion of the project.

Environmental Impacts and Mitigation Measures

Overall Aesthetic Effects of Project Construction and Operation

Construction of the proposed 12.6 linear miles of pipeline would involve localized and temporary disturbance of the pipeline alignments. Proposed pipelines would involve no permanent aesthetic impacts as lines would be placed underground and the alignment restored to its existing condition.

Construction of the proposed pipelines would result in short-term adverse aesthetic effects in the immediate vicinity of the segments under construction. Due to the anticipated rate of pipeline construction (500-1,000 feet per day), however, construction disturbance at any point along the alignment would be limited to a maximum of a few days. Land uses potentially affected by construction would include existing public streets, agricultural uses and residences along the alignments. Agricultural uses and rural roads in agricultural areas are not aesthetically sensitive to minor land disturbance. The existing residences along the proposed alignment are generally set back from the alignments, and impacts would be temporary and of relatively short duration. Lands that are disturbed as part of pipeline construction would be returned to their existing condition. Construction aesthetic effects would be less than significant.

Proposed pipelines and pipeline operation would not result in any long-term aesthetic impact.

The proposed storage basins would result in permanent aesthetic changes to the basin sites and vicinity. These changes would not result in significant adverse aesthetic impacts; surrounding agricultural uses are not visually sensitive, and residences are not directly exposed to potential impacts.

Construction of the proposed storage basins would involve permanent construction of berms that would extend four and ten feet above ground level at the eastern and western basins, respectively. Land uses potentially affected by the storage basins would include existing public streets, agricultural and residential uses in the vicinity of the basins. Construction of the eastern storage basin would involve the removal of existing orchard trees and the construction of the basin earthworks. The basin would be located in an area surrounded by almond orchards and bounded on the north and west by agricultural access roads. There are no residences adjacent to this basin, and the nearest residence is several hundred feet east of the proposed basin site; there is no direct line of sight between the proposed basin site and any residence or public road. The eastern basin would involve no significant aesthetic effect.

The western basin would involve construction of a containment berm rising up to eight feet above the existing grade; the structure would be visible from the adjacent Melton Road as

well as from surrounding properties in the vicinity. Earth works and water storage features are consistent with the agricultural nature of the project area, and the proposed basin is several hundred feet from the nearest residence (Figure 2-6). As a result, the western storage basin is not expected to result in a significant aesthetic effect.

Agricultural uses are not aesthetically sensitive.

There are no oak trees located within the area of effect of the proposed project. There are no identified scenic resources, scenic vistas or scenic routes located in the vicinity of the proposed project. The proposed project would have no effect on scenic resources.

Level of Significance: Less than significant

Mitigation Measures: None required

Light and Glare Effects

The proposed project would involve small amounts of night lighting in the form of security and safety lighting at the proposed pump stations. Proposed night lighting would be directed internally and would not result in any adverse impacts to adjacent uses, which are entirely agricultural. This impact is considered less than significant.

Level of Significance: Less than significant

Mitigation Measures: None required

2. AGRICULTURE RESOURCES -- Would the project:	Potentially Significant Impact	Less Than Significant With Mitigation Incorporated	Less Than Significant Impact	No Impact
a) Convert Prime Farmland, Unique Farmland, or Farmland of Statewide Importance (Farmland), as shown on the maps prepared pursuant to the Farmland Mapping and Monitoring Program of the California Resources Agency, to non-agricultural use?	☐	☐	☐	■
b) Conflict with existing zoning for agricultural use, or a Williamson Act contract?	☐	☐	☐	■
c) Involve other changes in the existing environment which, due to their location or nature, could result in conversion of Farmland, to non-agricultural use?	☐	☐	☐	■

NARRATIVE EXPLANATION

Environmental Setting

The proposed project is located in an agricultural area that is composed mostly of active mature almond orchards, and associated rural residential parcels. The project consists of 12.6 miles of pressure pipeline to be located primarily within the disturbed margins of

public streets and agricultural access roads. Proposed storage basins would be located in existing agricultural lands.

The project area, including proposed pipeline alignments and storage basins, are in active agricultural use and are mapped as approximately 50% "Farmland of Statewide Importance," and 50% "Prime Farmland," by the California Department of Conservation's San Joaquin County Important Farmland Map (2004). Approximately 50-60% of the lands in Division 9 are under a Williamson Act contract; the proposed pipeline alignments across several agricultural parcels under contract. Neither of the proposed storage basins would be located on lands under Williamson Act contract.

Soils along the proposed pipeline alignments are predominantly Veritas fine sandy loam and Manteca fine sandy loam, with areas of Delhi loamy sand, Honcut sandy loam, Timor loamy sand, Tinnan loamy coarse sand, and Trahern clay loam. These are generally deep soils that are moderately well- to well-drained with low or no shrink-swell potential and moderate to rapid permeability. The proposed storage basins would be located on Veritas fine sandy loam, which is a deep soil that is moderately well-drained with moderately rapid permeability.

Division 9 is presently served by the existing SSJID flood irrigation system. Existing SSJID gravity pipelines are located throughout the project area would be paralleled by the proposed pressure pipelines. The flood irrigation system is operated manually by opening and closing valves that release irrigation water to the adjoining field. Some owners within the project areaDivision 9 have installed auxiliary pumps and filtration systems to obtain higher quality water at pressure in order to irrigate nearby fields with sprinkler or drip systems.

Environmental Impacts

Impacts on Agricultural Lands and Agriculture

Construction of most of the proposed 12.6-mile pipeline alignments would occur along existing SSJID easements and farm access roads would involve no effect on adjoining agricultural operations or require any encroachment on adjoining lands. Two portions of proposed pipeline would require acquisition of new easements. Construction of these approximately 3,000 feet of pipeline would involve, no impact on agricultural resources; these pipelines would be located in farm access roads that are already disturbed.

The proposed storage basins would require the conversion of existing active, agricultural land to agricultural irrigation utility use. This impact is considered less than significant; the proposed irrigation utility use would remain agricultural in native and would improve irrigation service for the approximately 3,800 acres located in Division 9. The project would expand irrigation methods. The project would also reduce demands for irrigation water making conserved water available for other agricultural use.

The project would involve no other short-term potential impacts to agricultural land. Lands adjacent to the project components may be subject to minor disturbance during construction. However, all disturbed areas would be restored to their existing condition.

Level of Significance: Less than significant

Mitigation Measures: None required

Project Impacts on Williamson Act Contracts

Although the proposed backbone pipeline alignment would pass through several properties under Williamson contracts, the project would not involve a conflict with the terms of these contracts. Irrigation systems are integral to agricultural use. The San Joaquin County Development Title (9-1810.3) indicates that Utility Services are Permitted Uses of William Act lands.

The proposed storage basins would not be located on lands under Williamson Act contracts.

Level of Significance: Less than significant

Mitigation Measures: None required

3. AIR QUALITY -- Where available, the significance criteria established by the applicable air quality management or air pollution control district may be relied upon to make the following determinations. Would the project:	Potentially Significant Impact	Less Than Significant With Mitigation Incorporated	Less Than Significant Impact	No Impact
a) Conflict with or obstruct implementation of the applicable Air Quality Attainment Plan?	☐	☐	☐	■
b) Violate any air quality standard or contribute to an existing or projected air quality violation?	☐	☐	☐	■
c) Result in a cumulatively considerable net increase of any criteria pollutant for which the project region is non attainment under an applicable federal or state ambient air quality standard (including releasing emissions which exceed quantitative thresholds for ozone precursors)?	☐	☐	☐	■
e) Expose sensitive receptors to substantial pollutant concentrations?	☐	■	☐	■
f) Create objectionable odors affecting a substantial number of people?	☐	☐	☐	■

NARRATIVE EXPLANATION

Environmental Setting

The project site is located in southern San Joaquin County, which is located within the San Joaquin Valley Air Basin (SJVAB). The San Joaquin Valley Air Pollution Control District (SJVAPCD) has jurisdiction over most air quality matters in the SJVAB. The SJVAB and the jurisdiction of the SJVAPCD is comprised of San Joaquin, Stanislaus, Merced, Madera,

Fresno, Kings and Tulare Counties, and the Valley portion of Kern County. The SJVAPCD is tasked with implementing programs and regulations required by the federal and state Clean Air Acts.

The prevailing winds in the project area are from the north/northwest towards the south/southeast. Summers are hot and dry, and winters are cool with frequent periods of fog. Average daily temperatures range from 45.3 degrees F in January to 94.6 degrees F in July. Maximum temperatures of 90 degrees F or greater occur about 81 days per year. Temperatures of 32 degrees F or below occur about 22 days per year. Nearly 90% of the annual precipitation falls in the six months between November and April.

The vertical mixing of air pollutants in the SJVAB is limited by the presence of persistent temperature inversions. High concentrations of primary pollutants, which are those emitted directly into the atmosphere, may be found during ground-level inversions in the winter months. Severe air stagnation also occurs during elevated inversions, which contribute to the occurrence of high levels of ozone during the summer months.

Both the State of California and the federal government have established ambient air quality standards for criteria air pollutants (Table 3-1). The ambient air quality standards define clean air; the primary standards are established to protect the health of even the most sensitive individuals in our communities. Secondary standards set limits to protect public welfare, including protection against decreased visibility and damage to animals, crops, vegetation, and buildings. In addition to the criteria pollutants, the California Air Resources Board has also identified other air pollutants as toxic air contaminants (TACs) - pollutants that may cause acute serious, long-term effects, such as cancer, even at low levels.

The SJVAB is considered a non-attainment area for ozone (which is formed in the presence of sunlight from emissions of nitrogen oxides and reactive organic gases) and respirable particulate matter (PM10 an PM2.5) because concentrations of these pollutants sometimes exceed the ambient air quality standards. Carbon monoxide is managed as a local pollutant of concern. Localized areas subject to high levels of traffic congestion may be subject to carbon monoxide levels in excess of ambient air quality standards.

Ozone is not emitted directly into the air, but is formed by a photochemical reaction in the atmosphere. Ozone precursors, which include reactive organic gases (ROG) and nitrogen oxides (NOx), react in the atmosphere in the presence of sunlight to form ozone. Because photochemical reaction rates depend on the intensity of ultraviolet light and air temperature, ozone is primarily a summer air pollution problem. Ozone is a respiratory irritant and an oxidant that increases susceptibility to respiratory infections and can cause substantial damage to vegetation and other materials.

Health concerns associated with suspended particulate matter focus on those particles small enough to reach the lungs when inhaled. Few particles larger than 10 microns in diameter reach the lungs. Consequently, both the federal and state air quality standards for particulate matter apply to particulate matter 10 microns or less in diameter (PM10) as well as to particles less than 2.5 microns in diameter (PM2.5), which are carried deeper into the lungs. PM conditions in San Joaquin County are a result of a mix of rural and urban

sources, including agricultural activities, industrial emissions, dust suspended by vehicle traffic, and secondary aerosols formed by reactions in the atmosphere.

Motor vehicles are the dominant source of CO emissions in most areas. High CO levels develop primarily during winter when periods of light winds combine with the formation of ground level temperature inversions (typically from the evening through early morning). These conditions result in reduced dispersion of vehicle emissions. Motor vehicles also exhibit increased CO emission rates at low air temperatures. High CO concentrations occur in areas of limited geographic size, sometimes referred to as hot spots.

The SJVAPCD has jurisdiction over most air quality matters in the SJVAB and is tasked with implementing certain programs and regulations required by the federal and California Clean Air Acts. The SJVAPCD regulations that would be applicable to the project are summarized below.

- Regulation VIII (Fugitive Dust PM10 Prohibitions)
- Rules 8011-8081 are designed to reduce PM_{10} emissions (predominantly dust/dirt) generated by human activity, including construction and demolition activities, road construction, bulk materials storage, paved and unpaved roads, carryout and track out, landfill operations, etc.
- Rule 4101 (Visible Emissions)
- This rule prohibits emissions of visible air contaminants to the atmosphere and applies to any source operation that emits or may emit air contaminants.
-

SJVAPCD's Rule 9510 (Indirect Source Review) is applicable to specified development projects and requires specific percentage reductions in estimated project emissions for both construction and operation, or the payment of off-site mitigation fees if the required reductions cannot be met on the project site. Rule 9510 does not, however, appear to apply to the proposed irrigation system project.

The SJVAPCD has adopted its 2002 *Guide for Assessing and Mitigating Air Quality Impacts* (GAMAQI). GAMAQI defines an analysis methodology, thresholds of significance, and mitigation measures for the assessment of air quality impacts. This methodology was used in the following air quality analysis of the project.

TABLE 3-1

AMBIENT AIR QUALITY STANDARDS

Pollutant	Averaging Time	California Standards[1] Concentration[3]	California Standards[1] Method[4]	Federal Standards[2] Primary[3,5]	Federal Standards[2] Secondary[3,6]	Federal Standards[2] Method[7]
Ozone (O_3)	1 Hour	0.09 ppm (180 ug/m^3)	Ultraviolet Photometry	-	Same as Primary Standard	Ultraviolet Photometry
	8 Hour	0.070 ppm (137 ug/m^3)	-	0.08 ppm (157 ug/m^3)	-	-
Respirable Particulate Matter (PM10)	24 Hour	50 ug/m^3	Gravimetric or Beta Attentuation	150 ug/m^3	Same as Primary Standard	Inertial Separation and Gravimetric Analysis
	Annual Arithmetic Mean	20 uig/m^3	-	-	-	-
Fine Particulate Matter (PM2.5)	24 Hour	No Separate State Standard		35 ug/m^3	Same as Primary Standard	Inertial Separation and Gravimetric Analysis
	Annual Arithmetic Mean	12 ug/m^3	Gravimetric or Beta Attentuation	15 ug/m^3	-	-
Carbon Monoxide (CO)	8 Hour	9.0 ppm (10mg/m^3)	Non-Dispersive Infrared Photometry (NDIR)	9 ppm (10 mg/m^3)	None	Non-Dispersive Infrared Photometry (NDIR)
	1 Hour	20 ppm (23 mg/m^3)		35 ppm (40mg/m^3)	-	-
	8 Hour (Lake Tahoe)	6 ppm (7 mg/m^3)		-	-	-
Nitrogen Dioxide (NO_2)	Annual Arithmetic Mean	0.030 ppm (56 ug/m^3)	Gas Phase Chemiluminescence	0.053 ppm (100 ug/m^3)	Same as Primary Standard	Gas Phase Chemiluminescence
	1 Hour	0.18 ppm 338 ug/m^3)	-	-	-	-
Sulfur Dioxide (SO_2)	Annual Arithmetic Mean		Ultraviolet Fluoresence	0.030 ppm (80 ug/m^3)	-	Spectrophotometry (Pararosaniline Method)
	24 Hour	0.04 ppm (105 ug/m^3)	-	0.14 ppm (365 ug/m^3)	-	-
	3 Hour		-	-	0.5ppm (1300 ug/m^3)	-
	1 Hour	0.25 ppm (655 ug/m^3)	-	-	-	-
Lead[8]	30 Day Average	1.5 ug/m^3	Atomic Absorption	-	-	-
	Calendar Quarter	-		1.5 ug/m^3	Same as Primary Standard	High Volume Sampler and Atomic Absorption
Visibility Reducing Particles	8 Hour	Extinction coeffecient of 0.23 per kilometer - visibility of ten miles or more (0.07-30 miles or more for Lake Tahoe) due to particles when relative humidity is less than 70 percent. Method: Beta Attenuation and Transmittance thorugh Filter Tape.		No Federal Standards		
Sulfates	24 Hour	25 ug/m/^{3}	Ion Chromotography			
Hydrogen Sulfide	1 Hour	0.03 ppm (42 ug/m^3)	Ultraviolet Fluoresence			
Vinyl Chloride[8]	24 Hour	0.01 ppm (26 ug/m^3)	Gas Chromatography			

**The Nitrogen Dioxide ambient air quality standard was amended on February 22, 2007, to lower the 1-hr standard to 0.18 ppm and establish a new annual standard of 0.030 ppm. These changes become effective after regulatory changes are submitted and approved by the Office of Administrative Law, expected later this year.*

Environmental Impacts

Construction Fugitive Dust Emissions

The proposed project would involve construction activity that would generate fugitive dust emissions. Grading, excavation and travel on unpaved surfaces can generate substantial amounts of dust, and can lead to elevated concentrations of PM10 for nearby sensitive receptors.

Fugitive dust emissions would result from earthmoving associated with excavation and backfill of pipeline trenches and from excavation and construction of the storage basins. Total disturbance associated with the pipeline elements of the project would amount to a maximum of 31.5 acres distributed over the approximately 12.6-mile alignment (assuming a 20-foot wide construction corridor). Approximately 12.6 acres would be disturbed for the proposed storage basins. Pipeline construction is anticipated to proceed quickly, between 500 to 1,000 linear feet per day;) therefore, only a portion of the pipeline alignment would be in active disturbance at any one time. Construction of the storage basin would include disturbance on the entire basin.

According to GAMAQI, the SJVAPCD has determined that implementation and enforcement of dust control measures specified in SJVAPCD Regulation VIII would reduce construction-related fugitive dust impacts to a less than significant level. Regulation VIII requirements are incorporated in the following mitigation measures.

Level of Significance: Significant

Mitigation Measures:

1. The contractor shall comply with all applicable requirements of SJVAPCD Regulation VIII, including compliance with the following mitigation measures 2 through 109.

2. Visible Dust Emissions (VDE) from construction, demolition, excavation or other earthmoving activities related to the project shall be limited to 20% opacity or less, as defined in Rule 8011, Appendix A. The dust control measures specified in mitigations 3 through 9 shall be applied as required to maintain the VDE standard.

3. Pre-water all land clearing, grubbing, scraping, excavation, land leveling, grading, cut and fill, and demolition activity sites and phase earthmoving.

4. Apply water, chemical/organic stabilizer/suppressant, or vegetative ground cover to all disturbed areas, including unpaved roads.

5. Restrict vehicular access to the disturbance area during periods of inactivity.

6. Apply water or chemical/organic stabilizers/suppressants, construct wind barriers and/or cover exposed potentially dust-generating materials.

7. When materials are transported off-site, stabilize and cover all materials to be transported and maintain six inches of freeboard space from the top of the container.

8. Remove carryout and trackout of soil materials from paved roads on a daily basis unless it extends more than 50 feet from site; carryout and trackout extending more than 50 feet from the site shall be removed immediately. The use of dry rotary brushes is expressly prohibited except where preceded or accompanied by sufficient wetting to limit the visible dust emissions. Use of blower devices is expressly forbidden.

9. Traffic speeds on unpaved roads shall be limited to 15 mph.

10. The contractor shall submit a Dust Control Plan to the SJVAPCD for approval prior to beginning of demolition or construction, as required by SJVAPCD Rule 8021, and shall implement said plan during demolition and construction.

Significance After Mitigation: Less than significant

Implementation: The project engineer will be responsible for inclusion of the above standards in project plans and specifications.

Monitoring: The SJVAPCD will, as applicable, verify compliance with district rules during project construction and operation.

Ozone Precursor and Other Emissions from Construction Equipment

Project construction activity would also involve emissions of ozone precursors, carbon monoxide and particulate matter from the operation of construction equipment. Maximum potential emissions of these pollutants were estimated using the Road Construction Emissions Model, Version 6.3, prepared by the Sacramento Metropolitan Air Quality Management District. Using very conservative model inputs, the following potential daily and total project emission estimates were generated.

Pollutant	Max Daily Emissions (lbs)	Total Project Emissions (tons)
ROG	19.5	1.5
CO	55.8	4.2
NOx	74.7	5.6
PM10	25.5	1.9

GAMAQI indicates that a project will have a significant impact on ozone precursor emissions if it would generate more than 10 tons per year (tpy) of either ROG or NOx, or 15 tpy of PM10. Construction ROG and NOx emissions for the project as a whole would amount to 1.5 and 5.6 tons, respectively. The project will not involve a significant contribution to ozone precursor emissions.

Project PM10 emissions would amount to a total of 1.9 tons, which is well below the SJVAPCD 15 tpy threshold for significance of these pollutants.

Emissions of CO would occur in undeveloped areas and would not contribute to emissions in the vicinity of congested intersections.

The proposed project would result in no significant emissions of ozone precursors.

Construction equipment emissions do not appear to exceed permit thresholds for the District's Indirect Source Rule. SSJID will coordinate with the SJVPCD prior to construction to verify that the project is exempt from Indirect Source Rule permit requirements.

Level of Significance. Less than significant

Mitigation Measures: None required.

Project Operation Emissions

Operation of the project would not involve any substantial new air emissions. The proposed irrigation system would be supplied by gravity flow through the existing SSJID irrigation system and water would be held in passive storage. Pumping operations would be electrically powered and served from the existing electrical distribution system in the project area. These operations would involve no local air emissions; electrical consumption would contribute marginally to regional air emissions associated with power generation by the electrical purveyor.

The project would generate incidental new on-road vehicle travel required for inspection and maintenance of the proposed facilities. However, any increases in travel associated with the operation of the proposed system would be offset by reductions in travel associated with operation, inspection and maintenance of the existing system. In any event, ozone precursor emissions associated with these activities would not approach established significance thresholds.

Operation of the proposed project is expected to result in a reduction of existing diesel exhaust emissions associated with the operation of individual pumping equipment and associated electrical generators. SSJID estimates that there are 10 or more existing diesel generator sets located within the project area. As the owners of these facilities elect to use the proposed pressure system, the existing use of these diesel generators would be decreased, accordingly.

The proposed pressure system is also expected to reduce the use of existing groundwater wells connected to the existing electrical distribution system. As the proposed pressure system would be served from the gravity-fed SSJID irrigation system, electrical load from the lands converted from existing well pumps to the SSJID system would be marginally reduced by eliminating the need to lift groundwaters to the surface. The increased use of electricity required by project pumps would generate new non-local emissions, but

substantially less emissions per unit of power than individually-operated diesel groundwater pumps or pumps served by the existing electrical distribution system.

The proposed project would be capable of providinge improved irrigation service to lands currently within the service area of, and eligible for service by, SSJID, but would not bring any new lands under irrigation service or extend SSJID facilities to existing unserved areas.

Level of Significance: Less than significant

Mitigation Measures: None required.

Carbon Monoxide Emissions

As discussed in the environmental setting, carbon monoxide impacts are ordinarily associated with areas of highly congested traffic, typically intersections operating at level of service (LOS) E or F. Projects that would cause such intersection operations, or would substantially worsen intersection operations, may have a significant CO effect. As noted in the previous section, carbon monoxide emissions associated with actual construction of the project would be short-term, minor and not located in the vicinity of existing traffic congestion. The project would not result in significant carbon monoxide effects.

Level of Significance: Less than significant

Mitigation Measures: None required

Toxic Air Contaminants and Odor Impacts

The proposed irrigation system would not involve any substantial long-term emissions of toxic air contaminants. Project construction would involve the operation of diesel-powered heavy construction equipment, which would involve short-term emissions of diesel exhaust particulate; which is classified by the state as a Toxic Air Contaminant.

Diesel particulate emissions would amount to about seven pounds per day during the construction period. These emissions would be distributed along the proposed pipeline alignments and at the storage basin sites; emissions would generally occur at considerable distance from sensitive receptors in the project area and would be very short-term in nature. As a result, there would be no substantial long-term human exposure to diesel particulate emissions or significant health risk. The proposed project would involve no potential odor emissions. The project would transport and store water of relatively high quality.

Level of Significance: Less than significant

Mitigation Measures: None required

4. BIOLOGICAL RESOURCES -- Would the project:	Potentially Significant Impact	Less Than Significant With Mitigation Incorporated	Less Than Significant Impact	No Impact
a) Adversely impact, either directly or through habitat modifications, any endangered, rare, or threatened species, as listed in Title 14 of the California Code of Regulations (sections 670.2 or 670.5) or in Title 50, Code of Federal Regulations (sections 17.11 or 17.12)?	☐	■	☐	☐
b) Have a substantial adverse effect, either directly or through habitat modifications, on any species identified as a candidate, sensitive, or special status species in local or regional plans, policies, or regulations, or by the California Department of Fish and Game or U.S. Fish and Wildlife Service?	☐	■	☐	☐
c) Have a substantial adverse effect on any riparian habitat or other sensitive natural community identified in local or regional plans, policies, regulations or by the California Department of Fish and Game or US Fish and Wildlife Service?	☐	☐	☐	■
d) Have a substantial adverse effect on federally protected wetlands as defined by Section 404 of the Clean Water Act (including, but not limited to, marsh, vernal pool, coastal, etc.) through direct removal, filling, hydrological interruption, or other means?	☐	■	☐	☐
e) Interfere substantially with the movement of any native resident or migratory fish or wildlife species or with established native resident or migratory wildlife corridors, or impede the use of native wildlife nursery sites?	☐	☐	☐	■
f) Conflict with any local policies or ordinances protecting biological resources, such as a tree preservation policy or ordinance?	☐	☐	☐	■
g) Conflict with the provisions of an adopted Habitat Conservation Plan, Natural Conservation Community Plan, or other approved local, regional, or state habitat conservation plan?	☐	■	☐	☐

NARRATIVE EXPLANATION

Environmental Setting

The majority of the proposed pipeline alignment would be placed within existing SSJID easements, which are located along existing public roads and agricultural access roads. Almond orchards, which are the primary agricultural use adjacent to the proposed pipeline alignments, provide foraging and nesting habitat for common bird species. Although extensively disturbed, adjacent row crop lands may also support dispersed use by wildlife, including special–status species such as Swainson's hawk *(Buteo swainsonii)* and burrowing owl *(Athene cunicularia)*.

The eastern storage basin and pump station would be located in active almond orchards. The western storage basin would be located in row crops. As with the pipeline alignment, these lands and surrounding agricultural uses may provide foraging and nesting habitat for common bird species, and, row crop lands may also support dispersed use by special–status species such as Swainson's hawk and burrowing owl. No Swainson's hawk or burrowing owl were noted during the field survey by Moore Biological.

No oak trees were noted within the proposed pipeline alignments storage basin sites by Moore Biological. Oak trees along with a variety of ornamental trees are located adjacent to the proposed alignment, but outside of the area of potential effect. Proposed project facilities are not located within the drip line of any oak trees.

The project pipeline alignments and storage basins sites and vicinity were surveyed for the presence of Waters of the U.S. and wetlands. One small ditch that runs north-south and parallels the proposed pipeline alignment immediately north of Melton Road is incised three to four feet below the adjacent fields, and contained a small amount of standing water during the Moore Biological survey. The potential jurisdictional limits of this ditch are defined by the ordinary high water mark. The Stanislaus River, south of the project area is a jurisdictional Water of the U.S.; however, this waterway is outside the project's potential area of effect.

The project alignment and vicinity were also surveyed for the presence of habitat for the Valley elderberry longhorn beetle (*Desmocerus californicus dimorphus)* (VELB). The Valley elderberry longhorn beetle is a federally threatened species and occupies blue elderberry shrubs (*Sambucus mexicana*) for their entire life span; one group of elderberry shrubs was found during the survey in an area immediately north of Melton Road, within the property line of an adjacent residence. These shrubs are large established plants located adjacent to and west of SSJID's existing gravity line in this farm access road. This shrub group is outside of the project's area of potential effect.

Special-Status Species

Based on a search of the California Natural Diversity Data Base (CNDDB) for a 240 square mile area surrounding the project, Moore Biological prepared a listing of special-status species that have the potential to occur on the project site together with their listing status and their likelihood of occurrence (Table 3-2).

Of these species, Moore Biological identified a total of two special-status plant species with potential to occur in the general project area. These two plants consist of the delta button celery (*Eryngium racemosum)*, which is listed as Endangered by the state government, and the lesser saltscale *(Atriplex minuscula)*, which is not officially listed but occurs on the California Native Plant Society's list in Category 1B. The potential for occurrence of these species was judged as extremely low as the habitat for these species (e.g. vernal pools, seasonal wetlands, marshes or swamps, or riparian habitat) does not occur in the project vicinity.

TABLE 3-2

SENSITVE PLANT AND WILDLIFE SPECIES DOCUMENTED OR POTENTIALLY OCCURRING IN THE PROJECT VICINITY

Common Name	Scientific Name	Federal Status[1]	State Status[2]	CNPS List[3]	Habitat	Likelihood of Occurrence along the Alignment
PLANTS						
Delta button celery	*Eryngium racemosum*	None	E	1B	Riparian scrub in seasonally inundated floodplain with clay substrate	Extremely low to none: there is no suitable habitat for Delta button celery within the project area; the nearest occurrence of this species documented in the CNDDB (2009) is approximately 4.5 miles southwest of the project area along the Stanislaus River.
Lesser saltscale	*Atriplex minuscule*	None	None	1B	Chenopod scrub, playas, valley and foothill grassland.	Extremely low to none: intensively cultivated and leveled fields do not provide suitable habitat for lesser saltscale; the nearest occurrence of this species documented in the CNDDB (2009) is approximately 5 miles south of the project area.
WILDLIFE						
Birds						
Swainson's hawk	*Buteo swainsoni*	None	T	N/A	Nesting: large trees, usually within riparian corridors. Foraging: agricultural fields and annual grasslands.	Moderate: there are a few suitable nest trees along the alignment. The open grassland and cropland near these trees provide high-quality Swainson's hawk foraging habitat and increases the suitability of the trees along the alignment for nesting. The nearest occurrences of nesting Swainson's hawks in the CNDDB (2008) are less than 0.5 miles southwest of the alignment.
Western yellow-billed cuckoo	*Coccyzus americanus occidentalis*	C	E	N/A	Nests in riparian forests of larger river systems.	Extremely low to none: project area habitats do not provide suitable nesting habitat; the only documented occurrences of this species in the CNDDB (2009) search area are from 1962 to 1973, approximately 3 miles southwest of the project area.
Tricolored blackbird	*Agelaius tricolor*	None	SC	N/A	Requires open water and protected nesting substrate, usually cattails and riparian scrub with surrounding foraging habitat.	Very low: there are a few small patches of marginally suitable nesting habitat along Weber Slough. The open fields are also suitable for foraging. Tricolored blackbirds may occasionally fly over the alignment. The nearest occurrence of this species in the CNDDB (2008) is approximately 3 miles west of the alignment.
Burrowing owl	*Athene cunicularia*	None	SC	N/A	Nests in dense vegetation, usually cattails, tules, or riparian scrub; forages in grasslands.	Very low: there is no suitable nesting habitat for tricolored blackbirds along the alignments or at the reservoir sites. This species may occasionally fly through the area. The nearest occurrence of tricolored blackbird recorded in the CNDDB (2009) is approximately 2 miles north of the project area.

TABLE 3-2

SENSITVE PLANT AND WILDLIFE SPECIES DOCUMENTED OR POTENTIALLY OCCURRING IN THE PROJECT VICINITY

Common Name	Scientific Name	Federal Status[1]	State Status[2]	CNPS List[3]	Habitat	Likelihood of Occurrence along the Alignment
Mammals						
Riparian (San Joaquin Valley) woodrat	*Neatoma ruscipes riparia*	E	SC	N/A	Dense riparian woodlands and scrub along major Central Valley rivers.	Extremely low to none: the intensively cultivated habitats in the project area are not suitable for riparian woodrat; the nearest documented occurrence of this species in the CNDDB (2009) search area is from Caswell State Park, approximately 1 mile south of the project area.
Riparaian brush rabbit	*Sylvilagus bachmani riparius*	E	None	N/A	Riparian woodlands and scrub along major Central Valley rivers; prefers wild rose, blackberries and willows.	Extremely low to none: the intensively cultivated habitats in the project area are not suitable for riparian brush rabbit; the nearest documented occurrence of this species in the CNDDB (2009) search area is from Caswell State Park, approximately 1 mile south of the project area.
Amphibians						
California tiger salamander	*Ambystoma califonriense*	T	SC	N/A	Seasonal water bodies without fish (i.e., vernal pools and stock ponds) in grassland/woodland habitats.	Extremely low to none: the intensively cultivated habitats in the project area are not suitable for California tiger salamander; a 1912 occurrence of this species documented in the CNDDB (2009) approximately 1 mile east of the project area is considered extirpated (i.e., it no longer exists); the only other records of this species in the CNDDB search area are over 5 miles from the project area. The site is not in Designated Critical Habitat for California tiger salamander (USFWS, 2005a).
Fish						
Hardhead	*Mylopharodon conocephalus*	None	SC	N/A	Clear deep pools with sand and gravel bottoms in San Joaquin River and Sacramento River tributaries.	None: there is no suitable aquatic habitat for hardhead along the alignments or at the reservoir sites. The nearest occurrence of this species documented in the CNDDB (2009) is in the Stanislaus River, approximately 1 mile south of the project area.
Invertebrates						
Vernal pool fairy shrimp	*Branchinecta lynchi*	T	None	N/A	Vernal pools	None: there are no vernal pools or other suitable habitat for this species in the project area; vernal pool fairy shrimp are documented in a few locations in the CNDDB (2009) approximately 3 to 4 miles south of the project area. The site is not within designated critical habitat for vernal pool species (USFWS, 2005b).
Conservancy fairy shrimp	*Branchinecta conservation*	E	None	N/A	Vernal Pools	None: there are no vernal pools or other suitable habitat for this species in the project area; Conservancy fairy shrimp are

TABLE 3-2

SENSITVE PLANT AND WILDLIFE SPECIES DOCUMENTED OR POTENTIALLY OCCURRING IN THE PROJECT VICINITY

Common Name	Scientific Name	Federal Status[1]	State Status[2]	CNPS List[3]	Habitat	Likelihood of Occurrence along the Alignment
						documented in the CNDDB (2009) 5=/-miles south of the project area. The site is not within designated critical habitat for vernal pool species (USFWS, 2005b).
Valley elderberry longhorn beetle	*Desmocerus californicus dimorphus*	T	None	N/A	Elderberry shrubs, usually in Central Valley riparian habitats	Low: there are a few elderberry shrubs along a fence just north of Melton Road. However, these shrubs are surrounded by farm land and not in a riparian setting, making them less likely to support valley elderberry longhorn beetle. The nearest occurrence of this species documented in the CNDDB (2009) is along the Stanislaus River, approximately 1 mile south of the project area.

1 T = Threatened; E = Endangered. C = Candidate.

2 T = Threatened; E = Endangered; SC= State of California Species of Special Concern.

3 1B = Plants rare, threatened, or endangered in California or elsewhere.

Moore Biological indicates that past, farming, development, road construction and maintenance along the project alignment and in surrounding areas have substantially modified natural habitats. Moore identified a total of ten wildlife species with some limited potential to occur in the project area. Of these, only three – Swainson's hawk, burrowing owl, and Valley elderberry longhorn beetle – have the potential to occur on the project site. The potential of the remaining species - tricolored blackbird (*Agelaius tricolor)*, riparian brush rabbit (*Sylvilagus bachmani riparius)*, riparian woodrat (*Neatoma ruscipes riparia)*, California tiger salamander (*Ambystoma califonriense)*, hardhead (*Mylopharodon conocephalus)*, vernal fairy shrimp (*Branchinecta lynchi)*, and conservancy fairy shrimp (*Branchinecta conservation)* – to occur on the project site is very low to extremely low and in some cases "none."

The Swainson's hawk is a migratory hawk listed by the State of California as a Threatened species. The Migratory Bird Treaty Act and Fish and Game Code of California protect Swainson's hawks year-round, as well as their nests during the nesting season (March 1 through September 15). Swainson's hawks prefer nesting sites that provide sweeping views of nearby foraging grounds consisting of grasslands, irrigated pasture, hay, and wheat crops. This migratory raptor generally arrives in the Central Valley in mid-March, and begins courtship and nest construction immediately upon arrival at the breeding sites. The young fledge in early July, and most Swainson's hawks leave their breeding territories by late August.

The CNDDB contains several records of nesting Swainson's hawk in the greater project vicinity; the nearest occurrence of nesting Swainson's hawks in the CNDDB is the Stanislaus River and a nest tree along Manteca Road, approximately 0.25 miles west of proposed western storage basin. There is suitable foraging habitat in the agricultural lands that adjoin the western storage basin and occur elsewhere in the project area site, and there are suitable nest trees along the proposed pipeline alignments that may be used during some years by nesting Swainson's hawk.

Burrowing owls are a year-~~long~~ round resident in grasslands, scrublands and disturbed areas with a low density of trees and shrubs with low growing vegetation. The Migratory Bird Treaty Act and The Fish and Game Code of California protect burrowing owls year-round, as well as their nests during the nesting season (February 1 through August 31). The primary habitat association of the burrowing owl is ground squirrel burrows that are used for nesting, although burrowing owls have been known to dig their own burrows in softer soils. The semi-colonial owl breeds from March through August, and is most active while hunting during dawn or dusk. The CNDDB reports occurrences of this species in the Ripon or Manteca topographic quadrangles.

No burrowing owls or burrows with evidence of burrowing owl occupancy (i.e. whitewash, feathers and/or pellets) were observed along the pipeline alignment or the storage basin lands during the Moore Biological survey. There is open grassland and cropland adjacent to some of the alignment and storage basin lands that could be used by foraging burrowing owls. Only a few ground squirrel burrows were observed in the northeast portion of the project area. However, this species will colonize areas when suitable habitat becomes available.

The Valley elderberry longhorn beetle is a federally threatened species and its host plant is the blue elderberry shrub. The project alignment was surveyed for elderberry shrubs by Moore Biological Consultants. One group of blue elderberry shrubs was found during the survey north of Melton Road. These shrubs range in size from 15 to 20 feet tall and are growing along the fence of the associated residence, on the west side of the farm access road. These elderberry shrubs are surrounded by agricultural uses and are not in a riparian setting, making it less likely to support VELB. No other blue elderberry shrubs were observed within 100 feet of the proposed alignment of storage basin sites (Moore, 2009).

San Joaquin County Multi-Species Open Space and Habitat Conservation Plan (SJMSCP)

The proposed project site is within the area covered by the San Joaquin County Multi-Species Habitat Conservation and Open Space Plan (SJMSCP). The SJMSCP is a voluntary comprehensive program for assessing and mitigating the biological impacts of land development and related activities. A project that complies with the SJMSCP can be considered to result in less than significant impacts on biological resources under CEQA.

The SJMSCP is locally implemented by the San Joaquin County Council of Governments (COG). The compliance process outlined in the Plan has been adopted by federal and state agencies with jurisdiction or trusteeship over biological resources. In addition, the SJMSCP has been adopted locally by San Joaquin County, the COG, the City of Stockton and other incorporated cities and entities in San Joaquin County. The proposed project area has not yet been mapped and given a designation in the SJMSCP. If SSJID elects to participate in the SJMSCP, the project will be required to apply to and consult SJMSCP Habitat Technical Advisory Committee (HTAC) to receive SJMSCP coverage.

Coverage under the SJMSCP would require payment of SJMSCP fees and project conformance with the Incidental Take Minimization Measures (ITMMs) that would be specified by the COG. Payment of fees and implementation of ITMMs by definition reduce the potential biological effects of the project to a less than significant level. A project that does not comply with the SJMSCP must independently provide any mitigation measures necessary to reduce impacts to less than significant under CEQA.

ITMMs prescribed by the SJMSCP mitigate potential impacts to special-status species through pre-construction surveys conducted by a qualified biologist, and establishment of necessary construction buffer. Mitigation outside the SJMSCP would also require pre-construction surveys that will define mitigations needed to reduce impacts to less than significant. These mitigation measures are addressed in impact analysis below.

Environmental Impacts

Project Impacts on General Biological Resource Values

As discussed in Section 2 Agriculture, the proposed pipelines would be located primarily within existing disturbed SSJID easements and agricultural access roads and would involve no permanent losses of agricultural land. In any event, there are no substantial known areas of native vegetation or biological resources within or adjacent to the proposed alignment that would be subject to impact. A potential jurisdictional wetland and an

elderberry shrub group are located adjacent to portions of the pipeline alignments. As discussed in following sections, these resources would be protected from disturbance by proposed mitigation measures. The remainder of the project site provides only marginal wildlife or biological habitat values. As the project alignment will be returned to its preconstruction condition, the project would involve no permanent impacts on wildlife habitat values inherent in these lands.

The proposed storage basins that would be subject to impact would convert 12.6 acres of agricultural land to agricultural utility purposes. These sites would not be returned to their existing condition. Dispersed habitat values associated with agricultural lands are addressed in the following section regarding special-status species. The project would not result in any significant adverse impacts to these resources at a project level. As a result, the project's effect on general biological resources would be less than significant.

Level of Significance: Less than significant

Mitigation Measures: None required

Project Impacts to Waters of the U.S. and Wetlands

One potential wetland or Water of the U.S. was identified adjacent to a portion of the proposed pipeline alignment north of the western storage basin. This potential Water is contained in a drainage canal that has been incised and contains small amounts of standing water. The drainage canal is mapped as a "blue-line" drainage on the USGS topographic map, which is connected to a network of other blue-line drainages tributary to the Stanislaus River.

The proposed alignment would be located on uplands adjacent to the subject drainage, and would have a minimum setback of 10 feet from the ditch (Persak, pers. comm.). As a result, the project would not be expected to involve an effect on this Water. Due to the potential for inadvertent construction impacts, however, this resource should be fenced to prevent encroachment during the construction process. This is required by mitigation measures below.

The Stanislaus River south of the project is a Water of the U.S. The proposed project would involve no direct effect on the Stanislaus River and no direct biological effect. As discussed in Section 8 Hydrology and Water Quality, the project would involve beneficial impacts to Stanislaus River water quality and an indirect benefit to Stanislaus River biological resources.

Level of Significant: Potentially significant

Mitigation Measures:

1. The drainage located north of Melton Road and parallel to the proposed pipeline alignment shall be fenced with a highly-visible fencing material during the construction period in order to prevent construction encroachment into this waterway.

Significance after Mitigation: Less than significant

Implementation: The SSJID contractor will be responsible for installation and maintenance of fencing during the construction period.

Monitoring: The SSJID Project Engineer will be responsible for ensuring that construction fencing is installed and maintained.

Project Impacts on Special-Status Species

The proposed pipeline alignments are located within existing access roads and disturbed areas that do not involve any substantial special-status species habitat values; adjacent lands provide dispersed foraging habitat for special-status species, suitable nesting trees for Swainsons hawk, potential nesting sites for burrowing owls, and an area of potential habitat for the VELB.

Development of the proposed pipeline alignment, including tree trimming may involve large machinery operations in close proximity to Swainsons hawk and burrowing owl nests. Vibration and noise from machinery, and general construction activity in the vicinity of bird nests can result in significant disruption of breeding-related behaviors such as mating, abandonment or neglect of fledglings. These potential construction impacts would be reduced to less than significant through pre-construction surveys, and establishment of any necessary construction buffers or monitoring recommended by the surveying biologist.

Construction of the proposed pipeline segment north of Melton Road would occur in the vicinity of a group of blue elderberry shrubs, which is considered potential habitat for the VELB. U.S. Fish and Wildlife Service guidelines direct that, if possible, elderberry shrubs should be avoided by a ground disturbance setback of at least twenty feet from the drip line of each shrub. The guidelines further direct that buffer areas between 20 and 100 feet from the drip lines of the shrubs that are subject to temporary ground disturbance should be restored or re-vegetated.

Moore Biological Consultants indicates that the shrubs, in the context of surrounding agricultural uses, are not likely to support VELB. In any event, the proposed pipeline would be located on the opposite side of the existing SSJID gravity line resulting in the required minimum 20-foot setback. Disturbed land would be returned to pre-construction conditions. An existing fence would separate the proposed construction area from the elderberry shrubs, preventing inadvertent damage during construction. As a result, the project would result in less than significant effects on the VELB .

The proposed storage basins are located on active orchard and row crop lands. Development of these sites would not result in direct effects on existing special status species. The western storage basin would replace row crop land, which provides potential burrowing owl nesting and Swainson's Hawk foraging habitat. The eastern storage basin site may also provide limited suitable nesting for these species. Moore Biological indicates that the minor reduction in the available potential foraging habitat for Swainson's hawk or burrowing owl associated with the development of the storage basins is considered less

than significant when viewed with respect to the available potential foraging habitat for these species in the greater project vicinity.

The species subject to potential construction impacts are covered by the SJMSCP. Payment of required SJMSCP fees and implementation of Incidental Take Minimization Measures (ITMMs) specified by SJCOG would reduce the project's construction impacts on these resources to a less than significant level. These requirements are included in mitigation measures below. Participation in the SJMSCP, including payment of fees, and implementation of Incidental Take Minimization Measures (ITMMs), specified by the San Joaquin County COG would reduce any potential biological impacts to less than significant.

In the event that SSJID does not participate in the SJMSCP, the project will need to incorporate mitigation measures to reduce the project's potential effects on special status species to a less than significant level. These mitigation measures would include pre-construction surveys by a qualified biologist for nesting Swainson's hawk and burrowing owl along the alignment if construction commences between March 1st and September 15th. The qualified biologist may also require monitoring during construction in the vicinity of nests and would have the authority to stop work if any birds are showing signs of distress. These requirements are included in mitigation measures below.

Level of Significance: Potentially significant

Mitigation Measures:

1. SSJID shall implement either Mitigation Measure #2 below, or Mitigation Measures 3, 4, ~~and~~ 5 and 6 below.

2. SSJID shall obtain coverage of the project by the San Joaquin County Multi-Species Habitat Conservation Plan (SJMSCP), including the payment of any required fee and the implementation of any required Incidental Take Minimization Measures. ITMMs specified by the San Joaquin County COG shall be observed by the SSJID contractors; or

3. SSJID shall retain a qualified biologist to conduct pre-construction surveys for nesting Swainson's hawks along the proposed pipeline alignments if construction occurs between March 1 and September 15. The survey should include all large trees visible from the alignment. If active nests are found, the qualified biologist should determine the need (if any) for temporal restrictions on construction.

4. SSJID shall retain a qualified biologist to conduct pre-construction surveys of the project site for burrowing owls along the alignment if construction commences between February 1 and August 31. The survey should include the ruderal areas along the pipeline alignments, and all areas of open grassland visible from the alignment. If occupied burrows are found, a qualified biologist should determine the need (if any) for temporal restrictions on construction.

5. In the event any trees that need to be removed or trimmed to facilitate the project, they should be felled or trimmed outside of the general bird nesting season (February 1 through August 31) or SSJID shall have a nesting bird survey conducted immediately prior to tree trimming or removal. If active nests are found, tree felling or trimming should be delayed until the young have fledged.

6. SSJID shall implement the recommendations of the qualified biologist in Mitigation Measures 3 and 4.

Significance After Mitigation: Less than significant

Implementation: SSJID will be responsible for any required payment of SJMSCP fees. The SSJID contractor will be responsible for implementation of ITMMs and retention of a biologist to perform pre-construction surveys.

Monitoring: SSJID will be responsible ensuring that these measures have been completed prior to project construction.

Effects of Project Construction on Oak Trees, Including Heritage Trees

Within San Joaquin County, native oak trees, including Valley oak, coast live oak (*Quercus agrifolia*) and interior live oak (*Quercus wislizenii),* are subject to County protection. Native oak trees with a trunk diameter of 16 inches or greater as measured at twenty-four (24) inches above actual grade are considered Heritage Oak trees and are subject to special protection under San Joaquin County's Development Title.

Project construction would not involve the removal of any oak trees; the eastern storage basin would replace active almond orchards, which would require the removal of almond trees. The proposed pipeline alignments and storage ponds are not within the drip line of any known oak trees.

Level of Significance: Less than significant

Mitigation Measures: None required

5. CULTURAL RESOURCES -- Would the project:	Potentially Significant Impact	Less Than Significant With Mitigation Incorporated	Less Than Significant Impact	No Impact
a) Cause a substantial adverse change in the significance of a historical resource?	☐	☐	☐	■
b) Cause a substantial adverse change in the significance of a unique archaeological resource (i.e., an artifact, object, or site about which it can be clearly demonstrated that, without merely adding to the current body of knowledge, there is a high probability that it contains information needed to answer important scientific research questions, has a special and particular quality such as being the oldest or best available	☐	■	☐	☐

example of its type, or is directly associated with a scientifically recognized important prehistoric or historic event or person)?

c) Directly or indirectly destroy a unique paleontological resource or site or unique geologic feature?	☐	☐	☐	■
d) Disturb any human remains, including those interred outside of formal cemeteries?	☐	■	☐	☐

NARRATIVE EXPLANATION

Environmental Setting

The proposed project site is located in an agricultural area of south San Joaquin County. The project includes 12.6 miles of pipeline and 12.6 acres of storage basin construction. The pipeline alignments are located within existing disturbed area, or unpaved agricultural access roads; proposed storage basins are located on active agricultural lands.

Genesis Society was retained to prepare a cultural resources record search of the project area. The Genesis Society report is confidential; a copy of the report may be reviewed by qualified individuals and is on file with the SSJID.

Genesis Society obtained information on the prehistoric, ethnographic and historic context of the study area through a review of existing cultural resource records provided by the Central California Information Center at California State University, Stanislaus. The record search revealed that a total of two previous archaeological surveys have been conducted within, adjacent to or in close proximity to the proposed irrigation system. One the previous archaeological reports encompassed a large portion of the Hutchinson Road alignment, including proposed pipeline alignments adjacent to this roadway. No prehistoric archaeological resources have been identified or recorded in the project vicinity as a result of these previous surveys.

The records search indicates that three other historic data resources have been documented in the project vicinity. The *History of San Joaquin County, California with Illustrations (1968)*, the *Annals of Stanislaus County, Volume I: River Town and Ferries (1982)*, and a GLO Plat map for T2S/R7E (sheet #44-11, dated 1854) illustrate and discuss the history of project vicinity, specifically, the establishment of a ferry on the Stanislaus River. In 1864 the Hillyer and Burnham families established a Ferry crossing on the northern bank of the Stanislaus River, now the southeastern portion of the proposed pipeline alignment. Over time, the area has been subject to substantial change as a result of road, levee and agricultural development. The *Annals of Stanislaus County* concludes, "Today, due to the extensive levee work that has taken place in the past years as a means of river control, all evidence of the old ferry has disappeared." No other significant resources in the project area were noted.

Native American consultation was undertaken by Genesis Society, including consultation with the Native American Heritage Commission. No sacred lands listings or information were identified as a result of this consultation.

Environmental Impacts

Project Impacts on Archaeological and Historical Resources

The proposed project would involve excavation associated with construction of the proposed pipeline network and storage basins. Proposed pipelines would be constructed largely within existing SSJID easements, which are located along undeveloped agricultural access roads. The storage basins would be located on active orchards and row crop lands. The project is unlikely to involve the disturbance of archaeological or historic resources. The project would not involve the demolition of any structures.

Development of any portion of the project site, however, has the potential to unearth buried and previously-undiscovered cultural resources. In this case, proper treatment of any resources encountered would be necessary to avoid environmental affects. The following mitigation measures would address this issue.

Level of Significance: Potentially significant

Mitigation Measures:

1. If any subsurface cultural resources are encountered during construction of the proposed pipelines or storage basins, all construction activities in the vicinity of the encounter shall be halted until a qualified archaeologist can examine these materials and make a determination of their significance. SSJID and the contractor shall be responsible for mitigation of any significant cultural resources pursuant to the CEQA Guidelines.

2. If human remains are encountered at any time during the development of the project, all work in the vicinity of the find shall halt, and the County Coroner shall be notified immediately. The Coroner must contact the Native American Heritage Commission if the remains have been identified as being of Native American descent. At that time, the SSJID contractor shall retain a qualified archaeologist to evaluate the archaeological implications of the finds. The contractor shall conform to the requirements of the CEQA Guidelines if human remains are found to be of Native American origin.

Significance After Mitigation: Less than significant

Implementation: SSJID contractor will be responsible for retaining an archaeologist to evaluate the cultural resources encountered and for compliance with the archaeologist's recommendations or other applicable mitigation requirements under CEQA.

Monitoring: SSJID will be responsible for ensuring that all of the specified archaeological requirements are met, including review and approval of the archaeologist's recommendations.

6. GEOLOGY AND SOILS -- Would the project:	Potentially Significant Impact	Less Than Significant With Mitigation Incorporated	Less Than Significant Impact	No Impact
a) Expose people or structures to potential substantial adverse effects, including the risk of loss, injury, or death involving:				
i) Rupture of a known earthquake fault, as delineated on the most recent Alquist-Priolo Earthquake Fault Zoning Map issued by the State Geologist for the area or based on other substantial evidence of a known fault? Refer to Division of Mines and Geology Special Publication 42.	☐	☐	☐	■
ii) Strong seismic ground shaking?	☐	☐	☐	■
iii) Seismic-related ground failure, including liquefaction?	☐	☐	☐	■
iv) Landslides?	☐	☐	☐	■
b) Result in substantial soil erosion or the loss of topsoil?	☐	☐	■	☐
c) Be located on strata or soil that is unstable, or that would become unstable as a result of the project, and potentially result in on- or off-site landslide, lateral spreading, subsidence, liquefaction or collapse?	☐	☐	☐	■
d) Be located on expansive soil, as defined in Table 18-1-B of the Uniform Building Code, creating substantial risks to life or property?	☐	☐	☐	■
e) Have soils incapable of adequately supporting the use of septic tanks or alternative wastewater disposal systems where sewers are not available for the disposal of wastewater?	☐	☐	☐	■

NARRATIVE EXPLANATION

Environmental Setting

The project site is located in an upland portion of south San Joaquin Valley north of the Stanislaus River, a tributary of the San Joaquin River and the Sacramento-San Joaquin Delta. The site is essentially flat and located at an elevation of between 40 and 60 feet above mean sea level. Geologic materials underlying the project area consist of inter-bedded silt, sand, and gravel deposits that comprise the sedimentary valley deposits in the area.

There are no active or potentially active faults located in the project vicinity, and the project site is not subject to fault rupture hazards. San Joaquin County is subject to seismic shaking from fault features located east and west of the County. Potential damage to improvements due to earthshaking in San Joaquin County is minimized by the adherence to the California Building Code.

Soils underlying most of the project area have been substantially disturbed in conjunction with agricultural use and the construction of existing public roads and farm roads that are the proposed pipeline alignments. Soils underlying the project and vicinity are classified in the San Joaquin County Soil Survey (USDA Soils Conservation Service, 1992) as Veritas

fine sandy loam and Manteca fine sandy loam, with localized areas of Delhi loamy sand, Honcut sandy loam, Timor loamy sand, Tinnan loamy coarse sand, and Trahern clay loam. These are generally deep soils that are moderately well- to well-drained and have moderate to rapid permeability. The proposed storage basins would be located on Veritas fine sandy loam soils.

Project site soils are well-suited for agriculture. Soils underlying the project area are designated as "Prime" and "Farmland of Statewide Importance" by the State Department of Conservation (see Section 2 Agriculture).

Environmental Impacts

Exposure of New Development to Geologic Hazards and Soil Constraints

The proposed project would not be subject to known geological hazards. The proposed project would be engineered to withstand projected seismic shaking.

Construction of proposed pipelines would involve no substantial soil effects. These lines would be located along existing farm access roads and in disturbed areas adjacent to public roads.

Proposed storage basin sites would involve the conversion of agricultural soils to storage basin use. This effect is addressed in Section 2 and found to be less than significant.

During construction, project site soils would be exposed to potential erosion; however, the site is flat, and the soils are not highly susceptible to erosion. The project will be required to comply with Regional Water Quality Control Board storm water quality requirements. Compliance with these standards, which is required by mitigation measures in Section 8 Hydrology and Water Quality, would mitigate potential erosion impacts to less than significant.

Level of Significance: Less than significant

Mitigation Measures: None required

7. HAZARDS AND HAZARDOUS MATERIALS -- Would the project:	Potentially Significant Impact	Less Than Significant With Mitigation Incorporated	Less Than Significant Impact	No Impact
a) Create a significant hazard to the public or the environment through the routine transport, use, or disposal of hazardous materials?	☐	☐	☐	■
b) Create a significant hazard to the public or the environment through reasonably foreseeable upset and accident conditions involving the release of hazardous materials into the environment?	☐	■	☐	☐
c) Emit hazardous emissions or handle hazardous or acutely hazardous materials, substances, or waste within one-quarter mile	☐	☐	☐	■

of an existing or proposed school?

d) Be located on a site which is included on a list of hazardous materials sites compiled pursuant to Government Code Section 65962.5 and, as a result, would it create a significant hazard to the public or the environment?	☐	☐	☐	■
e) For a project located within an airport land use plan or, where such a plan has not been adopted, within two miles of a public airport or public use airport, would the project result in a safety hazard for people residing or working in the project area?	☐	☐	☐	■
f) For a project within the vicinity of a private airstrip, would the project result in a safety hazard for people residing or working in the project area?	☐	☐	☐	■
g) Impair implementation of or physically interfere with an adopted emergency response plan or emergency evacuation plan?	☐	☐	☐	■
h) Expose people or structures to a significant risk of loss, injury or death involving wildland fires, including where wildlands are adjacent to urbanized areas or where residences are intermixed with wildlands?	☐	☐	☐	■

NARRATIVE EXPLANATION

Environmental Setting

Hazard concerns associated with the project are primarily related to potential construction contact with areas of environmental contamination. The project would not involve any other substantial exposure to risks, including hazards associated with highway safety, transportation of hazardous materials, airport safety, or high-voltage electrical transmission lines. Geologic and soil hazards are addressed in Section 6, and potential flooding hazards are addressed in Section 8. Potential interference between project construction and the delivery of essential public services is addressed in Section 13.

The proposed pipeline portion of the project would involve public road crossings, construction adjacent to public roads, and construction-related traffic safety concerns. Traffic control, visual markers, and construction signage would reduce potential hazards to less than significant. Furthermore daily traffic along project impacted roadways is very low, less than 400 trips daily.

Proposed improvements would be located in agricultural areas, which may have been used for storage, dispensing and/or application of fuel, fertilizers and pesticides and may include past spill areas. An Environmental Data Resources, Inc. (EDR) report was prepared for the project site. The EDR report includes a review of regulatory agency lists for references to environmental contamination of the site or other (and) in the vicinity (Appendix C). The EDR report encompassed the proposed pipeline alignments, proposed storage basins and the general project vicinity.

EDR reported approximately 58 sites listed in the regulatory agency databases searched are within ½ mile of the project area. Of these 58 reported sites, 14 of the sites would be located on, or in close proximity to the project's potential area of effect. The majority of these listed sites consist of properly operating underground storage tanks (USTs) or above ground storage tanks (ASTs). Only three of the identified sites could involve potential environmental contamination concerns. The three sites of concern consist of 1) De Jong Trucking facility located at 24975 S. Austin Road, 2) an active agricultural facility located at 8350 E. Brady Road, and 3) an abandoned clandestine drug lab waste that may be present at the Mohler and Moncure Roads intersection.

De Jong Trucking is reported as a small quantity generator, meaning that more than 100 and less than 1,000 kg of hazardous waste is generated during a calendar month. The active agricultural facility treats and/or disposes of the wastes associated with confined and concentrated animal feedings, holdings and processing. Both of these listed sites are currently operating under applicable waste discharge requirements and have had no reported violations.

EDR reports that clandestine drug lab waste was abandoned at the intersection of Mohler and Moncure Roads. However, communication with the San Joaquin County Environmental Health Department, the San Joaquin County Sheriff office, the California Metropolitan Narcotics Task Force, and the local and federal e Drug Enforcement Agency (DEA) have any record of the abandoned drug waste. A local DEA criminal investigation officer reviewed files from the past 25 years, and indicated that any abandoned wastes in the project area would appear on their databases, and none were reported (Nelson, pers. comm.). During the site visit by InSite Environmental staff, no evidence of abandoned materials was noted at the subject site.

The project area consists of existing intensive agriculture; the project area is not exposed to substantial wildland fire risk.

Environmental Impacts

Exposure of Construction Workers to Environmental Contamination Associated with Adjacent or Nearby Land Uses

The proposed project would involve excavation of pipeline trenches and the storage basins within agricultural lands. Agricultural lands in the project area may have been used for storage, dispensing and/or application of fuel, fertilizers and pesticides and may include past spill areas. Planned excavation would also occur in the vicinity of reported abandoned drug lab waste. Research during the preparation of the Initial Study did not, however, reveal any evidence of contamination from past land uses.

Excavation of the project components in agricultural lands nonetheless could involve potential for exposure of construction workers to existing contamination and the potential for release of contaminants to the environment. Although project construction is anticipated to proceed quickly (500-1,000 linear-feet of pipeline per day), and construction worker exposure times would be low, there remains a risk of exposure for construction workers or environmental release. Proposed mitigation would require construction to stop

if evidence of unusual odors or soil discoloration is noted during construction. Mitigation or remediation would occur according to applicable regulations.

Undiscovered environmental contamination may also occur outside the boundaries of "environmental condition" sites of record as a result of lack of discovery or contaminant migration in the soil, groundwater system, or other pipelines and subterranean features. This potential effect would also be addressed by the mitigation measures discussed above.

Construction conflicts with groundwater and the need for trench dewatering are not expected. Groundwater levels are located well below the potential limits of trenching, see Section 8, Hydrology and Water Quality.

Level of Significance: Potentially significant

Mitigation Measures:

1. If evidence of unusual odors or soil discoloration is noted during construction, construction shall be halted. The SSJID contractor shall contact a qualified environmental professional to evaluate the situation and take or dictate action as required by applicable regulations.

Significance After Mitigation: Less than significant

Implementation: The contractor will be responsible for taking required action if evidence of potential contamination is noted.

Monitoring: SSJID will be responsible for ensuring that these requirements are observed prior to and during construction.

Use of Hazardous Materials During Construction

Project construction would involve use of hazardous materials and potential for new hazardous material spills. Primary construction materials would include relatively inert material such as pipe, sand and gravel, concrete and reinforcing steel. Construction and maintenance vehicles would transport and use fuels in ordinary quantities. Other substances used in the construction process would be ordinarily stored in approved containers, and used in relatively small quantities, and in accordance with the manufacturers recommendations and/or applicable regulations.

Level of Significance: Potentially significant

Mitigation Measures:

1. The contractor shall prepare and implement a hazardous materials spill plan for the project. The spill plan shall identify the level of worker training and supplies of spill containment and cleanup materials needed to respond to potential hazardous materials spills that could occur in conjunction with the project.

Significance After Mitigation: Less than significant

Implementation: The contractor will be responsible for incorporating hazardous materials spill and cleanup requirements in the project plans.

Monitoring: SSJID will be responsible for ensuring that these requirements are observed prior to construction.

Interference with Emergency Evacuation Plans

Construction of the proposed pipeline network would involve no substantial effect on operation of state or local emergency evacuation plans except through interference with use of public streets. Construction of the pipeline alignment would involve 15 public roadway crossings; roadways that would be crossed include Hutchinson Road, Frederick Avenue, Curtis Avenue, Moncure Road, Austin Road, Melton Road, Brady Road, and Lyons Road.

Project construction in these roadways would require temporary closure of one lane. Mitigation measures require that construction activity and lane closures be coordinated with the emergency response agencies with responsibility for the area. Otherwise, construction equipment is mobile and can be relocated on short notice, so that any interference with emergency response or evacuation would be minimized. Additionally, project-impacted roads support very low traffic volumes, and alternate routes would be available, if needed. The proposed storage basins would be located outside of all public roadways and would not interfere with any emergency evacuation plans.

Level of Significance: Potentially significant

Mitigation Measures:

1. Project construction will be coordinated with the emergency response agency with responsibility for the area if construction will require partial public street closure.

Significance After Mitigation: Less than significant

Implementation: The Project Engineer will be responsible for incorporating emergency response coordinating requirements in the project plans. The SSJID contractor will be responsible for implementing these requirements.

Monitoring: SSJID will be responsible for ensuring that these requirements are observed prior to and during construction.

8. HYDROLOGY AND WATER QUALITY -- Would the project:	Potentially Significant Impact	Less Than Significant With Mitigation Incorporated	Less Than Significant Impact	No Impact
a) Violate any water quality standards or waste discharge requirements?	☐	☐	☐	■
b) Substantially deplete groundwater supplies or interfere substantially with groundwater recharge such that there would be a net deficit in aquifer volume or a lowering of the local groundwater table level (e.g., the production rate of pre-existing nearby wells would drop to a level which would not support existing land uses or planned uses for which permits have been granted)?	☐	☐	☐	■
c) Substantially alter the existing drainage pattern of the site or area, including through the alteration of the course of a stream or river, in a manner which would result in substantial erosion or siltation on- or off-site?	☐	■	☐	☐
d) Substantially alter the existing drainage pattern of the site or area, including through the alteration of the course of a stream or river, or substantially increase the rate or amount of surface runoff in a manner which would result in flooding on- or off-site?	☐	☐	☐	■
e) Create or contribute runoff water which would exceed the capacity of existing or planned stormwater drainage systems?	☐	☐	☐	■
f) Place housing within a 100-year flood hazard area as mapped on a federal Flood Hazard Boundary or Flood Insurance Rate Map or other flood hazard delineation map?	☐	☐	☐	■
g) Place within a 100-year flood hazard area structures which would impede or redirect flood flows?	☐	☐	☐	■
h) Expose people or structures to a significant risk of loss, injury or death involving flooding, including flooding as a result of the failure of a levee or dam?	☐	☐	■	☐
i) Inundation by seiche, tsunami, or mudflow?	☐	☐	☐	■

NARRATIVE EXPLANATION

Environmental Setting

The Stanislaus River is an important water resource, which is located in the project vicinity. The river is located immediately east of Moncure Road but is separated from the proposed project facilities by its existing levee system. The Stanislaus River is one of the largest tributaries of the San Joaquin River. The river is 65 miles long and is extensively dammed and diverted. In the Ripon vicinity, the Stanislaus River is located within a well-developed riparian corridor most of which is publicly owned. The Stanislaus eventually meets the San Joaquin River downstream of the project area; the San Joaquin River flows into the Sacramento-San Joaquin River Delta.

Project site drainage is generally toward the south and west. There are no surface water resources on the project site. One portion of the proposed pipeline alignments north of Melton Road parallels a drainage that is shown on the USGS quadrangle map as an intermittent stream. This resource is discussed in Section 4 Biological Resources.

The proposed project would increase the efficiency of the existing irrigation system, specifically reducing existing irrigation water and tailwater discharges to the Stanislaus River

Currently, drainage from irrigation and storm water within Division 9 is either left to percolate into the soil or collected in existing SSJID laterals and discharged, under permit, into the Stanislaus River. SSJID also releases small amounts of spill water into the Stanislaus River as result of the existing gravity system design.

The project site is situated within Zone C as designated on the FEMA Flood Insurance Rate Map (FIRM) for San Joaquin County. Zone C is designated as an area of minimal flooding. (FEMA FIRM Panel No. 0602990755B, Revised July 4, 1988). The project would also be subject to potential inundation in the unlikely event of a catastrophic dam failure at Woodward Reservoir.

Groundwater resources beneath the project area are of the vast Central Valley aquifer, which consists of unconsolidated sediments derived from the Coast Ranges and the Sierra Nevada Mountains. Although SSJID supplies most irrigation water in the project area, this aquifer provides water to agricultural uses and communities elsewhere in the Central Valley. Groundwater levels in the project vicinity are approximately 20 feet below the surface (San Joaquin County, 2008).

Surface waters in San Joaquin County are impacted by polluted stormwater runoff from developed areas as well as from agriculture. The State Water Resources Control Board (SWRCB) has the responsibility under the federal Clean Water Act and National Pollutant Discharge Elimination System (NPDES) for the control of storm water quality. This responsibility has been delegated to the Regional Water Quality Control Board.

The principal control on construction storm water quality is the preparation and implementation of a Storm Water Pollution Prevention Plan (SWPPP), which is required for any construction project exceeding one acre in size. The SWPPP identifies potential construction pollution sources, identifies needed construction BMPs, and specifies maintenance and monitoring activities needed to prevent exceedance of applicable water quality standards. Construction BMPs include provisions for erosion control including limitations on disturbance and requirements for temporary soil stabilization through the use of mulch, seeding, soil stabilizers, and fiber rolls and blankets. BMPs may also include filtration devices, silt fences, straw bale barriers and sediment traps or basins.

The SWPPP must be prepared prior to construction, be implemented during construction, and be available on the construction site. A Notice of Intent (NOI) describing the status of the project and SWPPP must be filed with the RWQCB, which then issues a Waste Discharger's Identification Number (WDID).

Environmental Impacts

Direct Effects of the Project on Surface Waters

The project would involve no potential for direct adverse effects on surface waters. All elements of the proposed project would be located in upland areas where no surface waters are present. One section of proposed pipeline would be located in the vicinity of an existing drainage north of Melton Road. Potential impacts to this drainage would be prevented by mitigation measures identified in Section 4 Biological Resources.

The proposed project would increase the efficiency of the existing irrigation system, specifically reducing existing irrigation water and tailwater discharges to the Stanislaus River. The proposed western storage basin would be used to collect these waters, which currently either percolate into the soil or are discharged into the Stanislaus River. From the western basin, these waters would be redistributed back into the proposed pressure system.

The project would involve no other substantial change of the surface water resources of the project area. The project would not result in any adverse change in stormwater runoff. Proposed pipeline alignments would be returned to their existing condition following completion of the project. The project would not result in any new pavement or associated increase in stormwater runoff. Proposed storage basins would capture precipitation within the basin, reducing whatever existing runoff may be generated from these undeveloped sites.

Potential project effects on storm drainage facilities are discussed in Section 15 Utilities.

Level of Significance: Less than significant

Mitigation Measures: None required

Project Effects on or Exposure to Flooding

The project would involve no direct effect on flooding conditions in the project area. The project would involve no adverse effect on the Stanislaus River, its flow or its hydraulic capacity. The project would result in reductions in stormwater or irrigation runoff.

The project site is not anticipated to be exposed to flooding, nonetheless, the proposed pipeline network would be designed to prevent leakage and operate under internal pressure; under ordinary conditions, the proposed pipeline would be full to capacity at all times. As a result, this facility would not be subject to potential damage, infiltration, flotation or other impacts under flood conditions.

Level of Significance: Less than significant

Mitigation Measures: None required

Project Impacts on Surface Water Quality

The proposed project would result in generally minor disturbance of paved and farm access roads distributed along the 12.6-mile pipeline alignment. Paved trench sections would be closed and patched as construction proceeds, and sections within agricultural access roads would be restored to their existing condition. The two storage basins encompassing 12.6 acres would also result in disturbance of agricultural lands during construction.

Proposed construction would be subject to the construction stormwater requirements of the Regional Water Quality Control Board, as required by the mitigation measures below. These requirements would include the preparation and implementation of a Storm Water Pollution Prevention Plan, the filing of a Notice of Intent and obtaining a WDID. The project would not require post-construction storm water quality BMPs.

The proposed project would result in beneficial impacts to Stanislaus River water quality. The existing gravity irrigation system in Division 9 includes several laterals that collect agricultural drainage and irrigation spill water. These waters are currently discharged under permit into the Stanislaus River. The project would collect these waters in the proposed western storage basin and redistribute these waters into the proposed pressure system or the existing gravity system. Collection of these drainage and spill waters would significantly reduce or eliminate discharge of water, and any contaminants that may be included in that water, into the Stanislaus River.

Level of Significance: Potentially significant

Mitigation Measures:

1. The contractor shall prepare and implement a Storm Water Pollution Prevention Plan (SWPPP) for the project and file a Notice of Intent (NOI) with the Regional Water Quality Control Board prior to commencement of construction activity. The SWPPP shall be available on the construction site at all times.

2. Project plans shall incorporate an Erosion Control Plan consistent with all applicable provisions of the SWPPP.

3. The contractor shall submit the RWQCB Waste Discharger's Identification Number (WDID) to SSJID.

Significance After Mitigation: Less than significant

Implementation: The contractor will be responsible for preparation and implementation of the SWPPP, submittal of the NOI, and submittal of the WDID.

Monitoring: SSJID will be responsible for ensuring that the SWPPP has been prepared, the NOI submitted, and the WDID obtained.

Groundwater Quantity and Quality

The proposed project would involve no direct adverse effect on the groundwater system. Groundwater levels are well below the maximum depth of pipeline excavation, and the project would involve a probable reduction in existing groundwater withdrawals.

Development of the proposed project is expected to involve a reduction in existing groundwater withdrawals for agricultural lands served by the project. Currently within Division 9, agricultural lands are irrigated primarily by the SSJID gravity system. Owners needing higher quality water under pressure rely on water from the groundwater system. The proposed project would provide 3,800 acres ofall Division 9 lands access to pressurized irrigation waters from the District's existing surface water sources at a much lower unit cost than is currently available, which is expected to result in less usage of individual groundwater wells, and a net overall reduction of groundwater withdrawal within the project area and Division 9. As a result the proposed project would likely involve beneficial impacts to groundwater quantity and quality.

Level of Significance: Less than significant

Mitigation Measures: None required

9. LAND USE AND PLANNING – Would the project:	Potentially Significant Impact	Less Than Significant With Mitigation Incorporated	Less Than Significant Impact	No Impact
a) Physically divide an established community?	☐	☐	☐	■
b) Conflict with any applicable land use plan, policy, or regulation of an agency with jurisdiction over the project (including, but not limited to the general plan, specific plan, local coastal program, or zoning ordinance) adopted for the purpose of avoiding or mitigating an environmental effect?	☐	☐	☐	■
c) Conflict with any applicable habitat conservation plan or natural communities conservation plan?	☐	☐	☐	■

NARRATIVE EXPLANATION

Environmental Setting

The proposed project is located in a primarily agricultural area composed of almond orchards and row crop lands. The proposed 12.6 miles of irrigation pipeline would be located primarily along agricultural access roads, and proposed storage ponds would be located on active agricultural lands. The project area is west of the City of Ripon in the unincorporated area of San Joaquin County.

The project is within the planning jurisdiction of San Joaquin County. The San Joaquin County General Plan designation for all elements of the project site, and for lands adjacent

to the project, is General Agriculture (A/G). The site and adjacent lands are zoned AG-40, General Agriculture District.

The City of Ripon is located approximately ½ mile east of the easternmost portion of the project. The City of Ripon General Plan anticipates urban development as far west as Olive Avenue, which is the westernmost extension of the City's Sphere of Influence. The City of Ripon does not anticipate urban development within the project area.

There are no urban development plans for the project area. Development within the project area is presently very sparse, consistent with the agricultural nature of the area. Existing residences are dispersed along the public roads as shown on Figure 2-6. Approximately 90XX residences were mapped along the roads serving the project area; excluding homes along West Ripon Road and Mohler Road, the residential density in the Division 9 area is about one residence per 40 acres, a relatively low density. There is no substantial commercial development in the project area besides agriculture support and processing-related development. Proposed pipeline alignments are located within unpaved farm access roads and unpaved areas adjacent to public roads. These areas are mostly existing SSJID pipeline easements. Approximately 3,000 feet of the proposed pipeline alignment would require new easement acquisition; however, these proposed pipeline sections are also along existing farm roads. Proposed eastern and western storage basins would be located on active agricultural land; the potential effects of the project on agriculture are addressed in Section 2 Agriculture.

Environmental Impacts

Project Impacts on Land Use

The proposed project would not involve significant adverse effects on land use. The project is located in an agricultural area and is oriented to the improvement of existing irrigation service to the 3,800 largely agricultural acres located within SSJID Division 9. As discussed in the following sections, the project is consistent with land use designations and zoning and would involve no significant conflict with existing land uses.

The 12.6 miles of proposed pipeline would cause no change to existing land use. These lines would be located within existing pipeline easements and/or existing agricultural access roads, and these alignments would be returned to their existing condition upon completion of the project.

The storage basin portion of the project would result in the removal of 12.6 acres of farmed lands. This impact is addressed in Section 2 Agriculture and is considered less than significant. The proposed project would improve SSJIDs irrigation system, providing beneficial agricultural effects to the 3,800 acres within Division 9. As a result, the project would have a beneficial effect on agriculture.

Level of Significance: Less than significant

Mitigation Measures: None required

General Plan and Zoning Consistency

The proposed irrigation system will not conflict with the existing San Joaquin County General Plan designations or zoning. The proposed improvements are consistent with the applicable land use designations and zoning requirements, including requirements for the County's AG-40 agricultural zone; utilities are a Permitted Use within this district.

Level of Significance: Less than significant

Mitigation Measures: None required

Potential Land Use Conflicts Associated with the Project

The proposed project would not involve any inherent land use conflicts. The proposed pipeline network would be located underground following construction, and there would be no conflict between pipeline operation and the existing agricultural uses along the proposed alignment. The project would contribute to the efficiency and productivity of adjacent agricultural uses. The project would involve no conflict with residential uses in the project vicinity.

The proposed storage basins would be placed on agricultural lands. These basins would be considered an agricultural use among other agricultural uses and would not prevent, inhibit or otherwise impact any adjacent agricultural uses. The storage basins would remove 12.6 acres of agricultural lands but would benefit the 3,800 acres of agricultural lands in Division 9. This would be a beneficial effect.

The proposed project has the potential to create temporary land use conflicts and inconveniences during construction. Potential dust and noise effects would be addressed by mitigation measures included in Section 3 Air Quality and Section 11 Noise. Potential traffic conflicts would be addressed by a Traffic Control Plan (see Section C(16)) that would mitigate these possible conflicts. Impacts in any given area would not likely extend to more than a few days due to the rate of pipeline construction; overall impacts to adjoining properties will be short-term.

Level of Significance: Less than significant

Mitigation Measures: None required

10. MINERAL RESOURCES -- Would the project:	Potentially Significant Impact	Less Than Significant With Mitigation Incorporated	Less Than Significant Impact	No Impact
a) Result in the loss of availability of a known mineral resource classified MRZ-2 by the State Geologist that would be of value to the region and the residents of the state?	☐	☐	☐	■
b) Result in the loss of availability of a locally-important mineral resource recovery site delineated on a local general plan, specific plan or other land use plan?	☐	☐	☐	■

NARRATIVE EXPLANATION

Environmental Setting

Soils within the project area are fine-grained and do not represent a known mineral resource. The only available Mineral Land Classification Map for San Joaquin County designates the entire project area as MRZ-1 (CDC-DMG, 1988a). An MRZ-1 designation indicates that the soils contain excessive amounts of clay, silt or other deleterious material and are not suitable for use as PCC-grade aggregate.

There are no known oil or gas fields located in the project area (CDC-DMG, 1988b). No portion of the project area is designated for mineral resource use in the General Plan. There are no other known mineral resources associated with the project area.

Environmental Impacts

Project Effects on Mineral Resources

The proposed project would have no effect on the availability of or access to designated or known mineral resources.

Level of Significance: Less than significant

Mitigation Measures: None required

11. NOISE – Would the project result in:	Potentially Significant Impact	Less Than Significant With Mitigation Incorporated	Less Than Significant Impact	No Impact
a) Exposure of persons to or generation of noise levels in excess of standards established in the local general plan or noise ordinance, or applicable standards of other agencies?	☐	☐	■	☐
b) Exposure of persons to or generation of excessive groundborne vibration or groundborne noise levels?	☐	☐	☐	■
c) A substantial permanent increase in ambient noise levels in the project vicinity above levels existing without the project?	☐	☐	☐	■
d) A substantial temporary or periodic increase in ambient noise levels in the project vicinity above levels existing without the project?	☐	☐	■	☐
e) For a project located within an airport land use plan or, where such a plan has not been adopted, within two miles of a public airport or public use airport, would the project expose people residing or working in the project area to excessive noise levels?	☐	☐	☐	■
f) For a project within the vicinity of a private airstrip, would the project expose people residing or working in the project area to excessive noise levels?	☐	☐	☐	■

NARRATIVE EXPLANATION

Environmental Setting

The project area noise environment can be characterized as relatively quiet. There are no major noise sources located in the project vicinity. Noise sources in the project vicinity are primarily agricultural activities. Agricultural use of the area generates noise intermittently during the use of heavy equipment for field preparation, planting and harvesting. Periodic weed and pest control activity involve additional equipment use and/or aerial overflights.

There are no freeways or highways in the immediate vicinity of the project, and noise from these sources is not locally important. The more important County roads in the area, such as Manteca Road and West Ripon Road, involve relatively low traffic levels that do not contribute substantially to noise levels in the vicinity of proposed improvements. Existing minor County roads in the immediate project vicinity accommodate very low numbers of daily vehicle trips and are not a substantial source of noise even in the immediate vicinity of these roads.

There are no major manufacturing facilities, airports, airstrips or railroads in the project vicinity.

The potential for noise impact is related to noise levels and the noise sensitivity of potential "receptors" (i.e. land uses) in the vicinity of the noise source. Noise sensitivity for the residential uses that occur in the project area is reflected in the criteria contained within the Noise Element of the San Joaquin County General Plan 2010; the General Plan establishes an acceptable exterior noise level of 65 dB for residential areas, and 60 dB for schools, and hospitals. The prevailing agricultural land uses in the project vicinity are not considered noise-sensitive; rural residences located along project area roadways are considered moderately noise-sensitive s these uses are exposed to agriculture related noise as it occurs.

Environmental Impacts

Construction Noise Impacts

Project construction would involve locally significant short-term noise during the construction of the project. Construction of pipelines and basins would generate maximum noise levels ranging from 85 to 90 dB at a reference distance of 50 feet; construction noise levels would be reduced with distance. Noise would also be generated by construction truck traffic on project area roadways, including trucks transporting materials and equipment to and from the construction sites. This noise increase would be of relatively short duration, and would occur primarily during daytime hours.

Construction activities would be temporary in nature and are anticipated to occur during normal daytime working hours. The duration of construction noise would extend over a period of several weeks for proposed storage basins. The construction process for proposed pipelines would also extend over a period of several weeks or months, but the

noise impact, which would be localized to the immediate area of construction activity, would be limited to a few days at any given point. Pipeline construction is expected to occur at a rate of 500-1,000 feet per construction day; as a result, noise impact at a given noise-sensitive location would be limited to a few days at most.

Planned pipeline construction would involve significant but short-term noise impacts on the several residences that adjoin the proposed pipeline alignments (Figure 2-6). Storage basin construction would involve a more extended construction period. However, the home nearest the eastern storage basin is more than 200 feet away, and the western storage basin is several hundred feet from the nearest residence.

Construction noise would have no significant effect on agricultural land uses that adjoin the proposed project. Construction noise is a short-term phenomenon that, while temporarily annoying, does not result in significant or long-term effects provided that sleep interruption is not involved. The following mitigation measures would restrict construction noise to time periods that would not involve sleep interruption, which would reduce this potential effect to less than significant. This impact is considered potentially significant.

Level of Significance: Potentially significant

Mitigation Measures:

1. Noise impacts resulting from project construction shall be minimized by restricting hours of operation of noise-generating equipment in the vicinity of residences to 7:00 a.m. to 10:00 p.m. Monday through Friday, to 7:00 a.m. to 6:00 p.m. on Saturday and Sunday.

Significance After Mitigation: Less than significant

Implementation: The contractor will be responsible for implementing noise control requirements.

Monitoring: SSJID will be responsible for monitoring contractor activities.

Noise Associated with Operation of Proposed Facilities

Operation of the proposed pipeline network would not generate any noise as the pipeline would be underground. The proposed storage basins would require operation of the gravity and pressure system pump stations, and groundwater well pumps. The eastern storage basin would accommodate the low-head gravity pumps and pressurized pumps. The gravity system pumps would consist of three 8,000-gpm pumps, and the pressure system would consist of a bank of six short-coupled turbine pumps. The western storage basin would accommodate three pumps for the pressure system. One groundwater well pump would be located at each storage basin. All proposed pumps would be electrically operated and enclosed in cement structures. Although the proposed pumps may generate noise in excess of County standards, all pumps would be enclosed in cement structures significantly reducing noise levels, and the nearest sensitive receptor is a minimum of 600- and 300-feet from the eastern and western storage basins, respectively. Operational noise

of the proposed project would have no noise effects on sensitive receptors and is considered less than significant.

Level of Significance: Less than significant

Mitigation Measures: None required

12. POPULATION AND HOUSING -- Would the project:	Potentially Significant Impact	Less Than Significant With Mitigation Incorporated	Less Than Significant Impact	No Impact
a) Induce substantial population growth in an area, either directly (for example, by proposing new homes and businesses) or indirectly (for example, through extension of roads or other infrastructure)?	☐	☐	☐	■
b) Displace substantial numbers of existing housing, necessitating the construction of replacement housing elsewhere?	☐	☐	☐	■
c) Displace substantial numbers of people, necessitating the construction of replacement housing elsewhere?	☐	☐	☐	■

NARRATIVE EXPLANATION

Environmental Setting

The January 2008 population of San Joaquin County was estimated at 685,660 (Department of Finance, Report E-5a). The California Department of Finance reported an estimated 2008 total of 227,339 housing units in the County. About 72% of the 2008 housing units were single-family units; most of the remainder were multi-family units. The majority of new units developed over the last ten years have been single-family detached and attached units.

The project area is primarily in agricultural use and has been only lightly developed consistent with this overall use. The project sites alignments, storage basin sites and the project vicinity are designated and zoned for agricultural use (AG-40), which permits one residential unit per 40-acres of agricultural land. The existing residential density in the project vicinity is slightly less than these planning limits.

The project area is not planned for any substantial additional growth. Potential for significant population growth in the project vicinity is limited by applicable land use designations and zoning. The project vicinity is outside of the City of Ripon's Sphere of Influence.

Environmental Impacts

Project Impacts on Population and Housing

The project site does not propose any residential development, and the project would not result in any direct population effect. Approval of the proposed project would lead to improvement of an agricultural irrigation system, which in turn would permit improved and more efficient irrigation. The project would not extend any utilities that would support residential development and would have no impact on population growth.

The proposed project would not remove any residential units and would not displace any persons. No adverse impacts to population or housing are anticipated.

Level of Significance: Less than significant

Mitigation Measures: None required

13. PUBLIC SERVICES -- Would the project result in substantial adverse physical impacts associated with the provision of new or physically altered governmental facilities, need for new or physically altered governmental facilities, the construction of which could cause significant environmental impacts, in order to maintain acceptable service ratios, response times or other performance objectives for any of the public services:	Potentially Significant Impact	Less Than Significant With Mitigation Incorporated	Less Than Significant Impact	No Impact
a) Fire protection?	☐	☐	■	☐
b) Police protection?	☐	☐	■	☐
c) Schools?	☐	☐	☐	■
d) Parks?	☐	☐	☐	■
e) Other public facilities?	☐	☐	☐	■

NARRATIVE EXPLANATION

Environmental Setting

Police Protection Services

Law enforcement in the unincorporated area that makes up the project site and vicinity is the responsibility of the San Joaquin County Sheriff, which is based at 7000 Michael Canlis Boulevard in French Camp.

Project Impacts on Police Protection Services

The proposed project would not involve any substantial short- or long-term policing concerns. The proposed pipeline system would be placed underground and would not be subject to potential crime or vandalism or require policing services. The pump stations and groundwater well pumps located at the storage basins would be fenced and lighted; the storage basins would not include any substantial crime or vandalism opportunities.

Construction of the proposed pipelines would parallel some public roads and require 15 crossings of public road; construction may result in obstruction of travel lanes as trenches are dug and pipelines laid. Potential areas of concern would be traffic delays and emergency vehicle access at these construction areas. These access concerns would be addressed in Traffic Control Plan described as a mitigation measure in Section 14 Transportation; Preparation and execution of this plan would be coordinated with the law enforcement agency.

Project construction would, through the location of construction materials and equipment along the proposed project alignment, involve new crime opportunities during the construction period. These can be minimized by adequate construction site security, addressed in mitigation measures below.

Level of Significance: Potentially significant

Mitigation Measures:

1. The contractor shall fence and monitor vulnerable equipment and materials storage areas during construction as required to prevent theft and vandalism and to reduce calls for assistance from the County Sheriff.

Significance After Mitigation: Less than significant

Implementation: The contractor will be responsible for construction site security as specified in the project plans and specifications.

Monitoring: SSJID will verify that construction site security is being provided as required.

Fire Protection Services

The project site is located in portions of the unincorporated area that are served by two existing fire districts. The majority of the project area is served by the Ripon Fire Protection District from its station at 142 S. Stockton Ave, Ripon. The southwest portion of the project, including the western storage basin, is served by the Manteca-Lathrop Fire Protection District from its station at 800 E. J St., Manteca.

Impact of New Development on Fire Protection Services

The proposed project will not involve long-term fire control issues or increase demands on the fire and emergency services providers, no part of the proposed project would be a significant potential fire source. No increase in population or structural development will be directly associated with this project.

As discussed under Police Protection, pipeline construction may involve temporary concerns for emergency responders associated with minor traffic delays. Mitigation specified in Section 14 Transportation will require coordination of construction activities

with the emergency service agencies to minimize any potential interference with emergency service delivery.

There are no fire protection facilities located in the project vicinity that would be directly impacted by planned construction.

Level of Significance: Less than significant

Mitigation Measures: None required

Schools

The proposed project area is located within the Manteca and Ripon Unified School Districts. There are no school facilities located along or near the proposed pipeline alignments or storage basin sites. School buses service students residing along project vicinity roadways, during the school year.

Project Impacts on Schools

Construction of the project will not result in direct effects on any existing school property. The proposed project would not involve any direct influence on population or housing, or therefore on school demands. Impacts to school bus transportation routes during project construction would be mitigated in the Traffic Control Plan, Chapter 15.0 Transportation. The project would involve a less than significant effect on schools.

Level of Significance: Less than significant

Mitigation Measures: None required

Parks and Recreation

Parks and recreation services in the unincorporated area are provided by the County of San Joaquin. The County operates several regional parks including Oak Grove Regional Park and Micke Grove Regional Park and Zoo, located near Stockton and Lodi. The closest County park to the project vicinity is Raymus Village Park located 5888 E. Apache Dr., Manteca.

Within the City of Ripon to the east of the project area, parks and recreation services are provided by the City. The nearest City park is located at the southern end of Jack Tone Road, well outside the project area. There are no existing park facilities located in the general vicinity of the proposed project.

Project Impacts on Parks and Recreation

There are no parks or recreation facilities in the immediately vicinity of the proposed project improvements; construction of the proposed project would not result in any direct effects on parks or recreation. Similarly, the project would not involve an increase in population, housing or demand for parks and recreation facilities.

Level of Significance: Less than significant

Mitigation Measures: None required

Solid Waste

The County's franchise hauler for the project area is Stockton Scavenger Waste Management. Solid waste is disposed of at existing County landfill facilities. There is no shortage of landfill facilities space within the County. There exists more than sufficient solid waste disposal capacity to meet the demands of anticipated growth within the project area.

Project Impacts On Solid Waste

Construction of the proposed project will have an incidental impact on solid waste. Construction waste that is not recycled, such as asphalt and trench debris and packing materials, will be disposed of at the Foothill Landfill. There is no shortage of landfill capacity currently.

Level of Significance: Less than significant

Mitigation Measures: None required

14. RECREATION	Potentially Significant Impact	Less Than Significant With Mitigation Incorporated	Less Than Significant Impact	No Impact
a) Would the project increase the use of existing neighborhood and regional parks or other recreational facilities such that substantial physical deterioration of the facility would occur or be accelerated?	☐	☐	☐	■
b) Does the project include recreational facilities or require the construction or expansion of recreational facilities which might have an adverse physical effect on the environment?	☐	☐	☐	■

NARRATIVE EXPLANATION

Environmental Setting

Issues associated with recreation have been addressed in the "Parks and Services" portion of Section 13 Public Services/Facilities, above.

15. TRANSPORTATION/TRAFFIC – Would the project:	Potentially Significant Impact	Less Than Significant With Mitigation Incorporated	Less Than Significant Impact	No Impact
a) Cause an increase in traffic which is substantial in relation to the existing traffic load and capacity of the street system (i.e., result in a substantial increase in either the number of vehicle trips, the volume to capacity ratio on roads, or congestion at intersections)?	☐	☐	■	☐
b) Exceed, either individually or cumulatively, a level of service standard established by the county congestion management agency for designated roads or highways?	☐	☐	☐	■
c) Result in a change in air traffic patterns, including either an increase in traffic levels or a change in location that results in substantial safety risks?	☐	☐	☐	■
d) Substantially increase hazards to a design feature (e g., sharp curves or dangerous intersections) or incompatible uses (e g, farm equipment)?	☐	☐	☐	■
e) Result in inadequate emergency access?	☐	☐	☐	■
f) Result in inadequate parking capacity?	☐	■	☐	☐
g) Conflict with adopted policies supporting alternative transportation (e.g., bus turnouts, bicycle racks)?	☐	☐	☐	■

NARRATIVE EXPLANATION

Environmental Setting

The proposed project area is located in an agricultural area of southern San Joaquin County. Principal surface transportation routes in the project area include SR 99 (state), west Ripon Road (County), Manteca Road (County) and Austin Road (County). Existing daily traffic levels on SR 99 are approximately 75,000 vehicles per day. Other transportation routes, such as West Ripon Road, Arch Road, and Austin Road in the project vicinity are lightly used in the project vicinity and accommodate less than 2,500 vehicle trips per day. Other roads that parallel or would be crossed by the proposed pipeline alignment are also very lightly used and support less than 400 vehicle trips per day. Trips associated with roads in the project vicinity are generated from agricultural use and the limited number of residential units in the area.

The proposed pipeline alignments would be located adjacent to existing paved sections of public roadways and would require 15 crossings of these roadways. Required public roadway crossings include two at Fredericks Avenue, one crossing of Hutchinson Road, one crossing of Curtis Road, one crossing of Moncure Road, three crossings of Austin Road, three crossings of Melton Road, one crossing of Brady Road, and one crossing of Kincaid Road (Figure 2-6). The storage basin portion of the project would not be located

within any public roadway; the western storage pond is located adjacent to and south of Melton Road.

Environmental Impacts

Project Effects on Existing Roads

The proposed project would not involve any substantial new long-term traffic generation. Project construction would involve temporary localized traffic increases associated with construction materials delivery and worker access. These increases would not result in a measurable or significant effect on existing traffic levels on the roads adjacent to proposed facilities.

Construction of the proposed pipelines would occur in existing SSJID easements located along farm access roads and adjacent to public roadways; pipeline construction would require 15 crossings of public roadways. Project construction could involve potential short-term effects on traffic and circulation where the project parallels roads and at proposed crossings of the public roadways. Construction of the public roadway crossings can be expected to either require temporary closure of one lane, requiring traffic control. Adequate signage and public notification would allow drivers to plan their routes when possible to avoid the construction areas until the segment is completed. These potential effects would be addressed with a Traffic Control Plan, as provided in the mitigation measures below. The plan would require coordination between the contractor and the County Public Works Department. Development of the proposed storage basins would not result in any substantial traffic impacts.

Construction would involve temporary interruption of access to individual agricultural and residential properties along portions of the proposed pipeline alignments. Construction contracts would be conditioned to require that residents be notified 48 hours in advance of any driveway closure, and driveway access would be restored at the end of each work day. Access interruptions would be of short duration due to the anticipated pace of pipeline construction.

Level of Significance: Potentially significant

Mitigation Measures:

1. The contractor shall develop and implement a Traffic Control Plan that addresses the potential traffic conflicts associated with the project, including traffic control requirements, resident notification, access restoration, and the availability of parking facilities. Preparation and implementation of the Traffic Control Plan shall be coordinated with the San Joaquin County Public Works Department.

Significance After Mitigation: Less than significant

Implementation: The contractor will be responsible for preparation and implementation of the Traffic Control Plan, including coordination with the San Joaquin County Departments of Public Works.

Monitoring: SSJID will verify that the Traffic Control Plan has been prepared and implemented, and that coordination activities have occurred as required.

16. UTILITIES AND SERVICE SYSTEMS -- Would the project:	Potentially Significant Impact	Less Than Significant With Mitigation Incorporated	Less Than Significant Impact	No Impact
a) Exceed wastewater treatment requirements of the applicable Regional Water Quality Control Board?	☐	☐	☐	■
b) Require or result in the construction of new water or wastewater treatment facilities or expansion of existing facilities, the construction of which could cause significant environmental effects?	☐	☐	☐	■
c) Require or result in the construction of new storm water drainage facilities or expansion of existing facilities, the construction of which could cause significant environmental effects?	☐	☐	☐	■
d) Are sufficient water supplies available to serve the project from existing entitlements and resources, or are new or expanded entitlements needed?	☐	☐	☐	■
e) Has the wastewater treatment provider which serves or may serve the project determined that it has adequate capacity to serve the project's projected demand in addition to the provider's existing commitments?	☐	☐	☐	■
f) Is the project served by a landfill with sufficient permitted capacity to accommodate the project's solid waste disposal needs?	☐	☐	■	☐
g) Comply with federal, state. and local statutes and regulations related to solid waste?	☐	☐	☐	■

NARRATIVE EXPLANATION

Environmental Setting

The project site is located in the unincorporated area of southern San Joaquin County. The project would be located within South San Joaquin Irrigation Districts Division 9 area. SSJID provides irrigation water service to agricultural uses within Division 9.

Urban water, wastewater, and storm drainage utilities are not available in the unincorporated area of the project. Water and wastewater disposal needs are met on-site by individual land uses via wells and septic tank/leach field systems. Storm drainage in the project area is the responsibility of property owners and/or San Joaquin County with SSJID. The project area slopes toward the south and west, and existing runoff either percolates into the soil or is collected in existing SSJID gravity lines and discharged, under permit, into the Stanislaus River.

Electrical power in the project area is currently provided by PG&E. Other utilities, such as telephone service, are provided by state-regulated utility companies. Existing distribution voltage electrical power and communication facilities are on overhead systems.

Solid waste collection for residences in the project vicinity is provided by Stockton Scavenger. Solid waste is disposed at the existing County landfill facilities. There is no shortage of landfill space within the County.

Environmental Impacts

Project Demands for Utility Services

The proposed project would involve a beneficial effect on irrigation service within Division 9. The project would expand the range of irrigation services available to lands within the Division allowing increases in irrigation efficiency and diversification of agriculture in the area.

The proposed project would only involve an increase in demand for electrical utility service to operate proposed pumps; existing electrical service is available in public streets in the vicinity of proposed pump stations. PG&E was consulted during the preparation of this document and indicated no shortage of electrical capacity to serve the project..

The project does not include any new land uses and would not require any new water, wastewater, storm drainage, gas, phone or cable TV service.

The proposed project would involve a beneficial impact on the groundwater well system. Operation of the proposed pressure system would significantly reduce or eliminate groundwater withdrawal from individual groundwater wells, improving groundwater aquifer conditions, and eliminating the need for operation of diesel-powered well pumps. The project would utilized water already available to SSJID for the proposed system.

The project would also involve beneficial storm drainage impacts. The proposed system, including the western storage basin, would improve collection of irrigation runoff and reduce existing discharges into the Stanislaus River.

The project would require new electrical service to operate the proposed pump stations and groundwater well pumps, there is no shortage of electrical service to the project (Maldonado, pers comm.).

Level of Significance: Less than significant

Mitigation Measures: None required

Construction Impacts on Existing Underground and Overhead Utilities

Construction of the proposed alignment would involve excavation along existing roadways and other areas that may contain existing underground utility lines. Overhead electrical, phone and cable facilities are located along or across some Portions of the proposed

pipeline alignments. Construction of the storage basins would not impact any known underground or overhead utilities.

Construction of the proposed pipelines involves potential for damage to existing overhead or underground electric, telephone, cable or other utilities . These concerns are typically addressed by locating these facilities on project plans during project engineering, as they will be with the proposed project, and by consulting with Underground Service Alert, a nation-wide utility location service, prior to construction.

Level of Significance: Potentially significant

Mitigation Measures:

1. Existing utilities shall be located and incorporated in project plans.

2. Project design shall enable construction of the planned improvements to occur without damage to existing utilities. Should utility conflicts be unavoidable, project plans and specifications shall provide for relocation or reconstruction of existing utilities as required.

3. The project contractor shall consult with Underground Service Alert (USA) prior to underground construction. Utilities shall be marked as required to avoid accidental damage and service interruption.

Significance After Mitigation: Less than significant

Implementation: The Project Engineer will be responsible for coordination with utility providers and for preparation of plans and specifications that avoid utility conflicts. The contractor will be responsible for constructing the project in accordance with plans, for contacting USA and for taking action as required to avoid impacts on existing utilities.

Monitoring: SSJID will be responsible for review and approval of project plans and for ensuring that USA is contacted.

Project Impacts on Solid Waste

The proposed improvements would contribute incidentally to solid waste generation. There is no shortage of landfill capacity.

Level of Significance: Less than significant

Mitigation Measures: None required

17. GLOBAL CLIMATE CHANGE -- Would the Project:	Potentially Significant Impact	Less Than Significant With Mitigation Incorporated	Less Than Significant Impact	No Impact
a) Result in a significant effect on, or a cumulatively considerable contribution to, global climate change?	☐	☐	■	☐

NARRATIVE EXPLANATION

Environmental Setting

Global climate change is a subject of increasing scientific and public concern as well as of government action. Global climate change is understood to be the result of atmospheric concentrations of greenhouse gases (GHGs) that trap heat in the earth's atmosphere. GHGs are both naturally occurring and are emitted by human activity. GHGs include carbon dioxide (CO2), the most abundant GHG, as well as methane, nitrous oxide and other gases. Total worldwide emissions of GHGs in 2004 were estimated at 20,135 teragrams of CO2 equivalents (CO2e); U.S. emissions during the same year were estimated at 7,074 teragrams CO2e.

GHG emissions are associated with the combustion of carbon-based fuels; major GHG sources in California include transportation (40.7%), electric power (20.5%), industrial (20.5%), agriculture and forestry (8.3%) and others (8.3%). GHG emissions in California in 2004 were estimated at 484 teragrams CO2e.

The State of California is identifying strategies and implementing GHG emission reduction programs through AB 32 the Global Warming Solutions Act of 2006. AB 32 identifies global climate change as a "serious threat to the economic well-being, public health, natural resources and the environment of California." The State adopted its Global Climate Change Scoping Plan in December 2008. Primary strategies addressed in the Scoping Plan include new industrial and emission control technologies, alternative energy generation technologies, advanced energy conservation in lighting, heating, cooling and ventilation, reduced-carbon fuels, hybrid and electric vehicles, and other methods of improving vehicle mileage.

The proposed project would involve GHG emissions from the use of construction equipment, which would be short term. Operation of the proposed irrigation system would involve ongoing energy use and secondary emissions of GHGs.

The proposed project would, however, provide long-term beneficial impacts to global climate change through potential reductions in existing GHG emissions associated with agricultural use in the project area and portion of Division 9. Currently, many individual property owners within Division 9 utilize diesel-operated pumps to access groundwater and to provide pressure to support filtration, sprinkler drip irrigation systems. The proposed project would enable Division 9 farmers to forego use of existing diesel-operated equipment and to obtain pressurized, clean water from the proposed system. By eliminating existing fuel consumptions, GHG emissions associated with Existing irrigation would be reduced. Some of these GHG savings would be realized from the efficiency of

centralizing pressurization and filtration equipment, eliminating the need for on-demand pumping. Other savings would be realized by using available SSJID surface water supplies and eliminating the need to lift groundwater to the surface before it is pressurized.

Project Impacts on Global Climate Change

The project would not result in a cumulatively considerable contribution to global climate change.

Level of Significance: Less than significant

Mitigation Measures: None required

18. MANDATORY FINDINGS OF SIGNIFICANCE --	Potentially Significant Impact	Less Than Significant With Mitigation Incorporated	Less Than Significant Impact	No Impact
a) Does the project have the potential to degrade the quality of the environment, substantially reduce the habitat of a fish or wildlife species, cause a fish or wildlife population to drop below self-sustaining levels, threaten to eliminate a plant or animal community, reduce the number or restrict the range of a rare or endangered plant or animal or eliminate important examples of the major periods of California history or prehistory?	☐	■	☐	☐
b) Does the project have impacts that are individually limited, but cumulatively considerable? ("Cumulatively considerable" means that the incremental effects of a project are considerable when viewed in connection with the effects of past projects, the effects of other current projects, and the effects of probable future projects)?	☐	☐	■	☐
c) Does the project have environmental effects which will cause substantial adverse effects on human beings, either directly or indirectly?	☐	☐	☐	■

NARRATIVE EXPLANATION

Environmental Setting

Finding (a) is checked as "Less Than Significant With Mitigation Incorporated" on the basis of potential impacts on biological and cultural resources as described in Sections 4 and 5. These impacts would be reduced to less than significant with proposed mitigation measures.

The project would involve no significant new long-term environmental considerations or potential cumulative impacts. The project would involve upgrading the existing agricultural irrigation system serving SSJID Division 9 lands. The project would involve a less than considerable contribution to cumulative global climate change effects. There are

no other known foreseeable development projects located in the vicinity of the proposed project.

There are no other known project effects that would cause substantial adverse effects on human beings, either directly or indirectly.

Level of Significance: Less than significant

Mitigation Measures: None required

REFERENCES CITED

Central California Information Center. 2009. Records Search, SSJID Division 9 Pipeline Project. April 30, 2009.

Department of Finance E-5 a City/County Population and Housing Estimates, January 1, 2008.

Environmental Data Resources, Inc.. 2009. The EDR Radius Map with GeoCheck, SSJID Division 9 Irrigation System, Ripon, CA, May 1, 2009.

FEMA, Flood Insurance Rate Map, San Joaquin County, Panel #0602990755B, Revised July 4, 1988.

Sacramento Metropolitan Air Quality Management District. 2009. Road Construction Emissions Model, Version 6.3.

San Joaquin County. 2009. San Joaquin County District Viewer. http://www.sjmap.org/website/DistrictViewer/Disclaimer.htm

United States Department of Agriculture, Soil Conservation Service. 1988. Soil Survey of San Joaquin County, California. April 1988.

United States Department of Agriculture, Natural Resources Conservation Service. 2007. Web Soil Survey (http://websoilsurvey.nrcs.usda.gov/app/WebSoilSurvey.aspx)· August 2007.

PERSONS CONSULTED

Bologna, Sam. Engineering Department Manager, SSJID

Emrick, Steve. Counsel, SSJID

Hellstrom, Ray. GIS/Engineering Technician, SSJID

Jensen, Sean. Principal, Genesis Society, Paradise, CA

Moore, Diane. Principal, Moore Biological Consultants, Galt, CA

Nelson, Mark. Criminal Investigator, Drug Enforcement Agency, San Francisco, CA

Persak, Mike, Vice-President & Project Manager, Stantec

Shields, Jeff. General Manager, SSJID

DOCUMENT PREPARERS

This document was prepared by InSite Environmental, Inc. of Stockton under the direction of the South San Joaquin Irrigation District. . InSite Environmental staff participating in document preparation included the following:

Charlie Simpson, Principal

Nathan Parks, Environmental Planner

Victoria Jordan, Research Assistant

Tia Bunch, Administrative Assistant