APPENDIX 3-1 SSJID On-Farm Conservation Program Administration Tools from 2011-2014 Seasons

Att3_2015IRWM_WorkPlan_2of2

ATTACHMENT I – SSJID On-Farm Conservation Program Administration Tools from 2011-2014 Seasons

(Att3_DG_ProJust_8of8)

This Attachment is presented to illustrate the project controls successfully implemented for this existing program.

Attachment I contains the following documents:

- SSJID 2011 On-Farm Water Conservation Program -- Administrative Guidelines
- SSJID 2011 On-Farm Water Conservation Program – Program Description

- SSJID 2012 On-Farm Water Conservation Program -- Administrative Guidelines
- SSJID 2012 On-Farm Water Conservation Program – Program Description

- SSJID 2013 On-Farm Water Conservation Program -- Administrative Guidelines
- SSJID 2013 On-Farm Water Conservation Program – Program Description

- SSJID 2014 On-Farm Water Conservation Program -- Administrative Guidelines
- SSJID 2014 On-Farm Water Conservation Program – Program Description

ON-FARM WATER CONSERVATION PROGRAM
ADMINISTRATIVE GUIDELINES

SOUTH SAN JOAQUIN IRRIGATION DISTRICT

January 2011

Table of Contents

Overview and Purpose 1

Program Administration Tool 1

Finance 2

Enrollment 2

Advertisement 2

Selection and Notification 3

Review and Evaluation of Grower Proposals for New Conservation Measures Based on Technical Merit 8

Identification of External Program (e.g., NRCS EQIP) Funding and Adjustment of SSJID Cost Share 9

District Valve Packing Service 10

Monitoring and Verification 10

Field Visits 10

Documentation of Conservation Measure Implementation Costs 11

Operational Reports 11

Cost Share Payments 11

Program Tracking and Overall Management 12

Staffing Needs 13

Data Management 13

Appendix A: Request for Reimbursement Form A-1

Appendix B: Request for Release of Payment Information B-1

Appendix C: Recommendation for Reimbursement Form C-1

Appendix D: Sample Field Visit Record D-1

Appendix E: Participation Projections Based on Available Funding E-1

Overview and Purpose

On October 27, 2009, the Board approved funding for an incentive-based on-farm conservation program ("Program") to promote water conservation within SSJID. On October 26, 2010, the Board approved funding for 2011 in the amount of $1.25 million. Of the full amount, $1.14 million has been allocated for cost share payments to growers to incentivize implementation of conservation measures. The balance of the funds are allocated to provide equipment for the pilot delivery measurement program to be implemented in 2011. It is anticipated that the Program will be funded at similar levels in 2012 and 2013. The Board may decide to fund the Program in later years at its discretion. It is anticipated that some aspects of the Program, including grower outreach and District-provided valve packing services will be provided on an ongoing basis.

The program will be administered by Julie Vrieling, On-Farm Water Conservation Program Manager, who will report to Sam Bologna, Engineering Department Manager and Jeff Shields, General Manager.

On January 11, 2011, the Board approved the Program structure as described in the Program Description. The Program Description describes the enrollment process, conservation measures included in the Program, budget tracking, payment approval and processing, and monitoring and verification. Additionally, the Program Description includes an application for enrollment and applicable NRCS conservation practice standards for on-farm improvements. The Program Description serves as a document describing how the Program works to SSJID growers and to the broader community.

The purpose of this document is to provide guidelines to District staff for management and administration of the SSJID On-Farm Water Conservation Program to be implemented in 2011. It is anticipated that these guidelines will evolve over time along with the Program Description based on experience implementing the Program and based on changes to District facilities and operations as well as changes to farming practices within the District.

Program Administration Tool

The Program Administration Tool (PAT) consists of a spreadsheet tool with a record for each application and field that contains details of the application and conservation measures implemented, eligibility and selection results, and records of costs, payments, monitoring, and verification. The PAT provides a centralized location for records describing the Program while additionally supporting administration of the Program by allowing past and future payments to be tracked to guide the selection process, preventing approval of applications that could result in cost share payments exceeding the available budget.

Finance

Periodic reporting to District finance staff will be performed by the Program Manager in addition to submittal of payment requests for cost share payments to participants. Periodic reports will include projections of the timing and amounts of future cost share payments to support cash flow management. These reports will be generated on a monthly basis using the information stored in the PAT. Requests for cost share payments will be submitted to the finance staff as they are completed.

Enrollment

This section describes the process for enrollment, with an emphasis on staff activities needed to advertise the Program, select applications for cost share payments, and notify participants of the status of their applications. The enrollment process has been designed to provide flexibility to applicants in selecting fields and conservation measures while controlling SSJID administrative requirements and facilitating overall program management and planning. The aim of providing flexibility is to encourage widespread participation covering the range of crops, locations, and existing water management practices in the District.

Advertisement

As described in the Program Description, the program will be launched in February 2011 through a mailing to SSJID water users, an announcement on the SSJID web site, and through the SSJID Newsletter. Additionally, a brief press release will be made to local news outlets.

The following checklist has been developed for the Program Manager to develop and issue the advertisement:

1. Prepare mailing, website announcement, newsletter article, and press release for review
2. Arrange mailing to SSJID growers
3. Arrange for posting on SSJID web site
4. Arrange for inclusion of newsletter article in SSJID newsletter
5. Arrange for release of press release to local newspapers

The announcements will invite growers to apply for the Program by obtaining the Program Description and Application, either by picking up a copy at the District office in Manteca, by requesting a copy by mail, or by downloading the documents from the District web site. Additionally, copies will be made available to Division Managers to provide to growers on request. All requests will be handled in a timely manner to ensure equal opportunity for growers to apply for the Program.

Selection and Notification

Upon receipt, Program staff will assign applications a unique application ID, and record the date of receipt on the application and in the PAT. Applications will be reviewed by the Program Manager or Program staff assigned by the Program Manager and either approved or declined according to the following process:

1. Initial Review

   Review application for completeness and accuracy, including the main application and individual applications for each field. A complete application will have all applicable portions of the application filled in and, in the case of grower-proposed conservation measures, complete applications will include sufficient documentation to support evaluation of the conservation measure by the District. Flag any missing or incomplete information, and either contact the applicant for clarification, or return the application with an explanation of the reason the application is being returned.

2. Eligibility Check

   Verify the eligibility of the main application and each individual field application as follows:

   a. Minimum Field Size – The minimum field size for inclusion in the Program is 10 acres, based on the net irrigated acreage of the field.
   b. Applications for Fields Less than Minimum Size
      i. If an application is received for which a single conservation measure will serve multiple fields (for example a tailwater recovery system), the total acreage of the fields should be at least 10 acres.
      ii. If the field size (or total size of all fields with a single measure) is less than 10 acres, evaluate whether there is sufficient potential for water conservation to be achieved to warrant the administrative time required to include the Field in the Program. Consider the following:
         1. What is the potential quantity of water to be conserved?
         2. For each conservation measure, what is the potential cost share per acre? Is this cost substantially greater than for larger fields implementing the same conservation measure?
         3. What is the potential cost to the District per acre-foot of water conserved? How does it compare to current market values of water for transfer?
         4. Is the field devoted to productive agriculture?
      iii. Document all determinations of eligibility for fields less than 10 acres in size and obtain approval of Program Manager.

c. Current SSJID Water User – For all fields, verify that the applicant is a current SSJID water user. Notify any applicants that are not current users that all fields submitted for funding must use or become approved to use SSJID surface water before any cost share will be approved. For physical improvements, growers agree to use SSJID surface water for not less than 5 years.
d. Water Charges Current – Verify that water charges for all fields farmed by the applicant are current.
e. On-Farm Measurement – By signing the application, growers agree to implement on-farm delivery measurement in cases where the delivery is pressurized via an on-farm pump in accordance with the conservation measure "Delivery Measurement for Pumped Deliveries." Additionally, growers agree to allow the District to implement measurement in other cases, if practical. As a result, participating fields can be included in pilot delivery measurement programs implemented by the District to evaluate alternatives for on-farm delivery measurement, particularly for flood irrigated fields.
f. Satisfactory Performance in Prior Programs – If applicable, evaluate whether the applicant has performed satisfactorily in other Programs, such as the sump program. Document evidence and obtain approval of Program Manager for any denials of eligibility.

3. Secondary Review and Approval
   a. For eligible applications selecting one or more preapproved conservation measures, review the available Program budget based on prior cost share payments and projected payments for fields already selected but for which payments have not yet been issued. Using PAT, verify that the total of prior and projected payments is less than the available budget for each proposed conservation measure. If available budget remains, select the field for inclusion, subject to additional review.

      For field applications indicating that the field is also participating in NRCS or other funding programs, verify with the applicant whether the field has already been approved for funding under the external program and what the expected funding amount is. If external funding is confirmed, estimate the SSJID cost share payment based on the net cost to the grower of implementing the conservation measure, multiplied by the approved cost share percentage.

   b. For applications with grower proposals to implement conservation measures not included in the preapproved list, evaluate the grower proposal as described later in this section. If approved based on technical merit, review the available Program budget based on prior cost share payments and projected payments for fields already selected but for which payments have not been issued. Using PAT, verify

that the total of prior and projected payments for grower proposed conservation measures is less than the available budget. If available budget remains, select the field for inclusion, subject to additional review to ensure that implementation of the conservation measure would not place undue burden on the administration of the Program, the SSJID distribution system, or system operations.

4. Final Review and Approval
    a. For field applications for conversion from flood irrigation to sprinkler or drip/micro irrigation that have passed the initial approval process, submit the field application along with a map and other supporting information to (1) the Engineering Department Manager, (2) the Water Operations Supervisor, and (3) the Maintenance Supervisor.
        i. The Engineering Manager will review the application to determine whether the field can be served by SSJID within the physical constraints of the existing distribution system and make a determination whether to approve the application from an engineering perspective.
        ii. The Water Operations Supervisor will review the application to determine whether the field can be served by SSJID within the operational constraints of the existing distribution system and make a determination whether to approve the application from an operations perpective.
        iii. The Maintenance Supervisor will review the application to determine whether the field can be served by SSJID without causing undue increases to maintenance requirements.
        iv. Denial of the application by any reviewer will be documented in writing providing the reasons that the field cannot be reasonably served following conversion to sprinkler or drip/micro irrigation.
    b. For field applications for grower proposed conservation measures that have passed the initial approval process, the field application will be submitted along with a map or other supporting information as needed to (1) the Engineering Department Manager, (2) the Water Operations Supervisor, and (3) the Maintenance Supervisor as described above for field applications for conversion from flood irrigation to sprinkler or drip/micro irrigation. The review process for grower proposed conservation measures may be skipped, at the discretion of the Program Manager, if the proposed measure will clearly not impact the distribution system, operations, or maintenance.
    c. Review of all applications will be completed within 30 days of receipt.
    d. As part of the review process, the Director of the applicable Division will be given the opportunity to review the results of the review. The results will be summarized and provided by mail to the applicant.
5. Notification

a. For each field application, the applicant (and landowner, if applicable) will be notified following the Final Review and Approval process via phone and by mail. Additionally, the applicant may be notified by email, if provided. Notifications will consist of the following:
    i. For approved fields, a copy of the field application will be provided, along with a description of any additional information or implementation requirements identified by the District as part of the review process. Additionally, a Request for Reimbursement form (Appendix A) will be provided to the applicant (hereafter referred to as participant). Applicants indicating that they are participating in other, external programs that provide funding for conservation measure implementation will be provided Request for Release of Payment Information and Assignment of Payment forms (Appendix B) indicating that they would like to release payment information for the external program to SSJID for purposes of verifying external funding amounts and to assign payments to SSJID. The following conditions of approval will be listed in the notification of approval:

        1. The approval applies only to the approved conservation measures, which will be listed in the notification.
        2. All approved conservation measures must be implemented following the date of approval and within 1 year of the date of approval to be eligible for cost share payments.
        3. Implementation must be to applicable standards for each approved conservation measure, as described in the Prorgram Description.
        4. The participating grower is to pay all costs of the project, with the exception of the District cost share for Scientific Irrigation Scheduling or Soil Moisture Monitoring, in which case the District will pay the supplier directly.

    ii. For fields not selected, a copy of the field application will be provided to the applicant, along with a description of why the field was not selected and supporting documentation.

The selection and notification process is summarized as a process diagram in Figure 1, below.

Figure 1. Process Diagram for Selection and Notification Process.

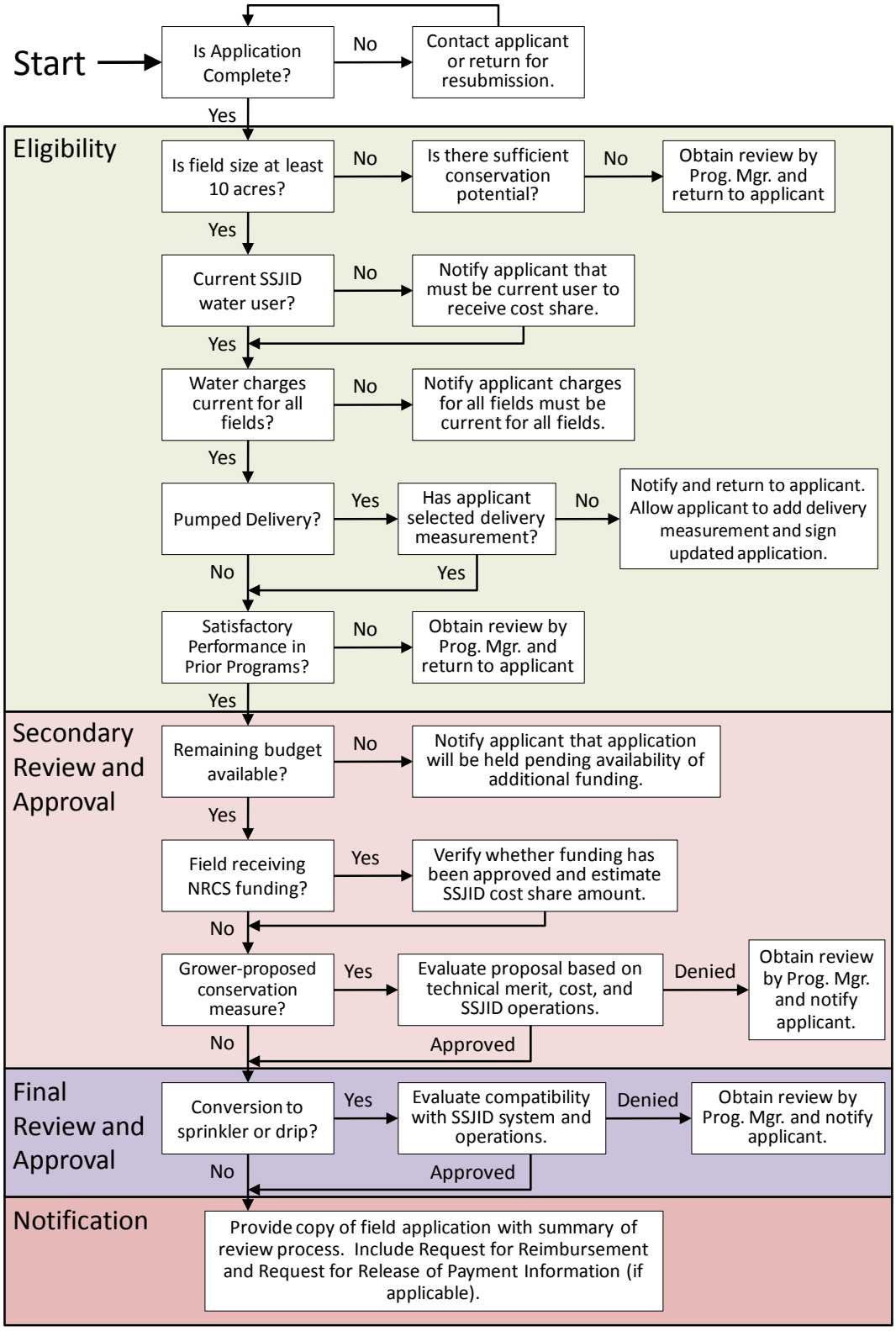

Review and Evaluation of Grower Proposals for New Conservation Measures Based on Technical Merit

Applicants have the option of proposing conservation measures not included in the preapproved conservation measure list for individual fields. For each field, applicants are required to submit the following information:

- Description of conservation measure to be implemented, including a description of all physical changes to the field and corresponding irrigation management changes
- Itemized cost list giving costs of major system components
- Sketch of field showing field location and physical changes to field, if applicable
- Description of how the proposed conservation measure will result in water conservation

Proposals for additional conservation measures will be evaluated by SSJID staff based on the following considerations:

- Completeness of proposal – the proposal must include the requested information at a sufficient level of detail to allow for evaluation by the District.
- Demonstrated effectiveness – the proposed conservation measure must be based on a demonstrated method of reducing deep percolation, tailwater, or other losses (i.e., seepage from farm ditches or evaporation). The proposed measure must be demonstrated conclusively in the SSJID area or other areas with sufficiently similar conditions, and it must be suitably applied. The District may consider new innovations, provided that they are accompanied by a clear description of how the measure will result in water conservation.
- No special administrative requirements – the proposed measure must not cause a burden to SSJID with respect to the continued delivery of irrigation water or to the administration of the Program. The measure must be observable to ensure that implementation of the measure can be documented for verification purposes.

For each application, staff will prepare a brief memorandum documenting findings related to the above considerations. Additionally, staff will identify any standards to be applied to the measure. These standards may include specific District requirements or industry standards (e.g. NRCS conservation practice standards), as are required for the preapproved conservation measures.

Additionally, staff will prepare a cost estimate for implementation of the measure. The cost estimate may be prepared based on the cost estimate provided by the applicant, provided that the costs are independently verified by the District.

Following development of the cost estimate, staff will identify a proposed cost share percentage for approval by the Program Manager. In general, it is anticipated that the District's contribution

for physical improvements will be subject to a 50% maximum cost share and management practices will be subject to a 75% maximum cost share. These values may be adjusted based on consideration of benefits to the grower vs. the District of implementing the measure; in general, the District would be willing to pay a greater share for conservation measures with greater benefits to the District. Once a cost share percentage is established for a given grower proposed conservation measure, the value should be used for other grower proposals for the same or essentially the same measure in order to provide equal treatment to all applicants.

As described previously under Selection and Notification, if the application is approved based on technical merit, available funding will be verified. If funds are available, the application may be subject to the Final Review and Approval process by the Engineering Manager, the Water Operations Supervisor, and the Maintenance Supervisor.

Results of the evaluation will be provided to the applicant along with notification of whether the application is approved or denied. If approved, any applicable standards and determination of the cost share percentage and maximum cost share amount (calculated as the cost share percentage multiplied by the estimated cost) will be included in the notification.

Identification of External Program (e.g., NRCS EQIP) Funding and Adjustment of SSJID Cost Share

As mentioned previously, applicants will be required to indicate on each field application whether the conservation measures proposed for implementation under the Program have also been included in an application for funding under an external program such as the NRCS Environmental Quality Incentives Program (EQIP). Staff will verify whether funding has been approved for the external program and how much funding is to be provided by contacting the funding agency directly (e.g., NRCS) after receiving the signed Request for Release of Payment Information and Assignment of Payment (Appendix B) from the applicant.

If the applicant's field has been approved for a cost share payment under the external program, the SSJID cost share will be calculated as follows:

1. Once the actual costs of conservation measure implementation have been received, obtain final documentation of payment information from external funding agency.
2. Subtract the external cost share amount from the actual implementation cost as documented by the participant.
3. Multiply the remaining cost to the participant by the approved cost share percentage for each applicable conservation measure.
4. Pay the participant the result, up to the Program limit for each applicable conservation measure.

In addition to the SSJID cost share, calculated as described above, the payment assigned to SSJID from NRCS will be paid to the grower by SSJID.

NRCS programs to fund on-farm water conservation measures for growers in the SSJID are administered by the NRCS service center in Stockton. The local NRCS contact is:

Mr. David Simpson
District Conservationist
Natural Resources Conservation Service
Stockton Service Center
3422 W. Hammer Lane, Suite A
Stockton, CA 95219-5493
(209) 472-7127
(209) 472-7890 fax
David.Simpson@ca.usda.gov

District Valve Packing Service

District valve packing for flood irrigation valves installed on District pipelines will be provided as an on-demand service by the District. Growers will be responsible for scheduling valve packing with the District by contacting Julie Vrieling at (209) 249-4675 or email jvrieling@ssjid.com. Upon approval, the District will be responsible for removing and reinstalling the valve, if needed, as well as packing the valve. The grower will be responsible for paying the District for the cost of valve packing material, which the District is able to purchase in bulk, along with the cost of District labor to repack the valve. The cost of removing and reinstalling the valve, if needed, will be covered by the District.

Monitoring and Verification

Following approval and notification, staff will contact approved applicants to develop an estimate of when the conservation measure will be implemented and when documentation of implementation costs will be submitted for reimbursement. A sample Request for Reimbursement form is included as Appendix A of this document. The form will be provided to the participant with the notification of approval for each approved field application.

Field Visits

Based on the timing of conservation measure implementation, staff will coordinate with the participant to schedule field visits during and following construction to verify and document implementation of physical improvements according to Program standards. A sample form and checklist for field visits has been included as Appendix D of this document. It is anticipated that this form will be refined by staff over time based on experience documenting conservation measure implementation through field visits to verify construction to applicable standards. At a minimum, the following information will be gathered during field visits:

- Photographs
- Measurements of critical dimensions and capacities
- Sketch of layout, including water sources and drainage outlets for the field
- List of key materials used in construction
- List of applicable performance criteria and confirmation that criteria are met based on conservation measure standards
- Documentation of any tests performed to verify proper operation

For management practices, field visits may be conducted to verify implementation as well. For example, field visits may be conducted to verify that soil moisture monitoring equipment is installed at the field or to meet with irrigation scheduling consultants to discuss observations and recommendations.

All field visits will be coordinated with the applicant and other involved parties in advance. A sample Field Visit Record is provided in Appendix D of this document.

Documentation of Conservation Measure Implementation Costs

Documentation of conservation measure implementation costs and proof of payment must be provided by the applicant along with the reimbursement form submitted to request a cost share payment. All documentation will be reviewed carefully by staff to verify the correct cost share amount to be paid to the grower. This documentation additionally provides verification that the conservation measure was implemented as proposed.

Operational Reports

Operational reports for conservation measures such as scientific irrigation scheduling and soil moisture monitoring will be provided by service providers directly to the District. For these conservation measures, the District will directly reimburse the supplier rather than the participating grower. A condition of reimbursement for supplier reimbursement by the District is that the service provider will supply the operational reports to the District in a timely manner. Program staff will periodically review agreements for scientific irrigation scheduling, soil moisture monitoring, or grower proposed conservation measures that include operational reports, and will remind suppliers for which operational reports have not been received of the need for the service provider to submit the reports.

Cost Share Payments

As described previously, requests for cost share payments will be processed following receipt of a Request for Reimbursement (Appendix A). Approved requests will be issued for each field. The Request must be accompanied by documentation of implementation costs, including invoices and receipts from equipment and service providers. Costs incurred by the grower

internal to his or her operation that are associated with the installation of the conservation measure are not considered eligible for reimbursement. Staff will review documentation of all costs in detail to ensure that the quantities and costs are consistent with the conservation measure implemented and are reasonable based on typical costs as documented based on NRCS cost share lists, U.C. Cost and Return Studies (coststudies.ucdavis.edu), discussion with local suppliers, or other sources.

For each payment, Program staff will review the Request for Reimbursement and prepare a Recommendation for Reimbursement (Appendix C) for review and approval by the Program Manager. Then, the approved Recommendation for Reimbursement will be submitted to the Finance department to issue checks to the participant and service providers, as applicable. Concurrently, a notification will be sent to the participant summarizing the costs documented in the Request for Reimbursement, the costs eligible for cost share payment documented in the Recommendation for Reimbursement, and the resulting cost share amounts for both the participant and service provider. The notification will also advise the participant that the Recommendation for Reimbursement has been forwarded to the Finance department for payment and that it is anticipated that a check will be issued within 30 days.

The Finance department will provide a report summarizing payments issued on a monthly basis for the prior month to the Program Manager. The summary will list the fields for which reimbursements were issued, along with reimbursement amounts and dates checks were issued. Payment information will be entered into the PAT by Program staff.

Payment caps for individual conservation measures and for individual growers will apply as described in the Program Description. In general, growers will be limited to total SSJID cost share payments of $50,000 for 2011. Payments for conversion to sprinkler or flood, for installation of tailwater recovery systems, or for grower proposed physical improvements will be limited to $25,000 per grower for each measure. Payments for scientific irrigation scheduling and soil moisture monitoring will be limited to $5000 per grower for 2011.

Program Tracking and Overall Management

Program tracking will be achieved primarily using the Program Administration Tool (PAT). Staff will review the status of applications on an ongoing basis as they move through the enrollment process and as conservation measures are implemented and cost share is issued for selected fields. Program tracking will be conducted on approximately the following time scales, and management actions will be taken as needed to ensure maximum participation in the Program while documenting conservation actions on individual fields and ensuring the Program is implemented within the available budget:

- Daily

  - Entry of new applications into the PAT
  - Update of enrollment status through initial review, eligibility checks, secondary review, final review, and notification for individual field applications
  - Update status of field visits, including most recent field visit date, total number of field visits to date, whether implementation to Program standards was verified, whether components included in cost documentation were verified as being present in the field
  - Update of implementation cost and approved cost share information through review of Requests for Reimbursement and preparation of Recommendations for Reimbursement based on documented and approved implementation costs
  - Update information on cost share from external programs based on discussion with applicants and participants and based on review of payment information provided by external funding agencies
- Monthly
  - Review of total applications received and approved by conservation measure and by conservation measure category
  - Update of cost share payment information based on summary of payments issued provided by finance staff
  - Development of recommendations for reallocation of funding totals by conservation measure category based on review of applications received and remaining budget by category
  - Preparation of Program summary reports for review by General Manager and Board of Directors

Staffing Needs

A projection of the number of fields and acres participating in the program in 2011 based on available funding and assumptions related to cost share amounts per field, field size, and other factors is provided in Appendix E. These estimates are meant to provide a rough estimate of the number of applications that will be approved and the corresponding administrative requirements to aid in District projections of staffing required to implement the Program.

Data Management

Data entry, updating, and correction will be completed through the PAT. All data entry processes will be performed by Program staff. Hard copies of applications, documentation of the application review process, field visit reports, and implementation cost and reimbursement documentation will be kept on file at the District's office.

Program documents including the Program Description, Administration Guidelines, and all standard forms used for the Program will be digitally maintained by the Program Manager on the District computer system.

Appendix A: Request for Reimbursement Form

For District Use Only

Application ID: _____

Date Received: _____

REQUEST FOR REIMBURSEMENT
(SSJID On-Farm Water Conservation Program, 2011)

1. Applicant name _____
2. Mailing address _____
3. Telephone # _____ Email _____
4. Assessor's Parcel Number (APN) _____
5. SSJID Delivery Location (example: "_____") _____
6. Field size (acres) _____ 7. Crop _____
8. Tax ID# for recipient of reimbursement _____

Summary of Costs and Requested Reimbursement Amounts

Conservation Measure	Total Cost for Field[1]	Cost per Acre[2]	Cost Share Percent[3]	Maximum Cost Share[4]		Requested Reimbursement[5]	
				$ per Field	$ per Acre	$ per Field	$ per Acre
Delivery Measurement for Pumped Deliveries	$_____	$_____	80%	$4,500		$_____	
Conversion from Flood to Sprinkler Irrigation[6]	$_____	$_____	50%		$825		$_____
Conversion from Flood to Drip Irrigation[6]	$_____	$_____	50%		$825		$_____
Tailwater Recovery System to Prevent Runoff	$_____	$_____	50%		$600		$_____
Scientific Irrigation Scheduling	$_____	$_____	75%	$2,250		$_____	
Soil Moisture Monitoring	$_____	$_____	75%	$1,125		$_____	
Other (please describe): _____ _____ _____	$_____	$_____	___%	$_____	$_____	$_____	$_____

1. Enter total cost for field as supported by attached documentation. If receiving funding from an external program (e.g., NRCS EQIP), eneter total cost minus cost share from other programs.
2. Enter total cost per acre, based on cropped acreage.
3. Cost share percent based on Program Limits. For other, grower proposed conservation measures, enter cost share % determined by SSJID as part of application review process.
4. Maximum cost share based on Program Limits. For other, grower proposed conservation measures, enter maximum cost share per field or per acre, determined by SSJID as part of application review process.
5. Enter the lesser of the Maximum Cost Share and either the Total Cost per Field multiplied by the Cost Share Percent or the Cost per Acre multiplied by the Cost Share Percent, as appropriate.
6. For fields with conversion from flood to sprinkler or drip/micro, costs for installation of a flow meter for delivery measurement should be listed separately under Delivery Measurement for Pumped Deliveries.

REQUEST FOR REIMBURSEMENT
(2011 CONSERVATION PROGRAM, CONTINUED)

For District Use Only
Application ID: _____
Date Received: _____

Attach detailed documentation of conservation measure implementation costs. Include the following:

- Invoices and receipts from equipment and service providers
- Itemized lists of work items, quantities, and costs for any costs incurred internal to the farming operation
- Other costs, as appropriate
- Payment information for other programs such as NRCS EQIP, if applicable

SUBMIT COMPLETED FORM TO SSJID

(SEND TO: ON-FARM CONSERVATION PROGRAM MANAGER, SSJID, 11011 E. HWY 120, MANTECA)

1. Your completed request will be reviewed & processed according to Program policy. A determination and recommendation by the On-Farm Water Conservation Program Manager will be made as authorized by the Board of Directors.
2. Upon approval, the applicant will be notified by Program staff with the approved payment amount and time schedule for payment receipt.
3. There will be no cost for inspections by Program staff, but a final inspection and approval will be required before reimbursement is made. Contact Julie Vrieling at (209) 249-4675 to schedule a field visit.
4. By signing below, the applicant states that the conservation measure implementation costs documented herein are complete and accurate to the best of his/her knowledge.

APPLICANT SIGNATURE _____ **DATE** _____

For District Use Only
Approved By: _____
Total Reimbursement: _____

Appendix B: Request for Release of Payment Information and Assignment of Payment

REQUEST FOR RELEASE OF PAYMENT INFORMATION

Date: _____

To Whom It May Concern:

I, _____(print name) grant permission for information describing conservation measure implementation, such as installation of sprinkler irrigation, drip/micro irrigation, or tailwater recovery systems including documentation of cost share incentive payment amounts to be released to the South San Joaquin Irrigation District (SSJID) for purposes of determining appropriate cost share payments under the SSJID On-Farm Water Conservation Program. Unless specific fields are listed below, payment information for all fields may be provided to SSJID.

Specific Fields:

1. _____
2. _____
3. _____
4. _____
5. _____

Sincerely,

(sign to left)

_____ (print name)

Address: _____

_____

_____

Phone: _____

Email: _____

Close

This form is available electronically.

Form Approved - OMB No. 0560-0183

CCC-36
(09-09-09)

U.S. DEPARTMENT OF AGRICULTURE
Commodity Credit Corporation

ASSIGNMENT OF PAYMENT

See Page 2 for Privacy Act and Public Burden Statements.

PART A - GENERAL INFORMATION

1. Producer's (Assignor's) Name and Address *(Including Zip Code)*	2. Assignee's Name and Address *(Including Zip Code)*
3. Producer's (Assignor's) Tax Identification Number *(9 Digit Number)*	4. Assignee's Tax Identification Number *(9 Digit Number)*

PART B - APPLICABLE PROGRAM(S)

5. Program	6. Assigned Amount for Each Applicable Year					7. State, County, and Reference Number, If Applicable
Conservation Reserve Program Annual Rental (CRP)	YEAR	YEAR	YEAR	YEAR	YEAR	
	AMOUNT	AMOUNT	AMOUNT	AMOUNT	AMOUNT	
	YEAR	YEAR	YEAR	YEAR	YEAR	
	AMOUNT	AMOUNT	AMOUNT	AMOUNT	AMOUNT	
Milk Income Loss Contract (MILC)	YEAR	YEAR	YEAR	YEAR	YEAR	
	AMOUNT	AMOUNT	AMOUNT	AMOUNT	AMOUNT	
Direct and Counter-Cyclical Payment (DCP)	YEAR	YEAR	YEAR	YEAR	YEAR	
	AMOUNT	AMOUNT	AMOUNT	AMOUNT	AMOUNT	
Loan Deficiency Payment (LDP)	YEAR	YEAR	YEAR	YEAR	YEAR	
	AMOUNT	AMOUNT	AMOUNT	AMOUNT	AMOUNT	

8. Other Program Name *(All CRP, other than annual rental)*	9. Program Year or Payment Year	10. Assigned Amount	11. State, County, and Reference Number, If Applicable
		$	
		$	
		$	
		$	

PART C - REPRESENTATION OF ASSIGNOR AND ASSIGNEE

In order to assign a cash payment in accordance with the programs specified by the assignor in Items 5 and 8, this form must be completed by both the assignor and the assignee. Assignment is effective for all counties unless specify on Item 7 or Item 11. This assignment is applicable only to programs publicly announced before this form is filed and is subject to the terms stated in this form and the provisions of 7 CFR Part 1404.

The assignee agrees to repay promptly to the Federal Government any amount by which the assigned payment exceeds the amount secured by the assignment. The assignor and the assignee agree that they will promptly notify the county FSA office of any change affecting this assignment. This assignment may be revoked at any time by written request signed by the assignee.

12A. Producer's (Assignor's) Signature (By)	12B. Title/Relationship of the Individual if Signing in a Representative Capacity	12C. Date *(MM-DD-YYYY)*
13A. Assignee's Signature (By)	13B. Title/Relationship of the Individual if Signing in a Representative Capacity	13C. Date *(MM-DD-YYYY)*

PART D - REVOCATION OF ASSIGNMENT

Assignment of payment authorization above is hereby revoked.

14A. Assignee's Signature (By)	14B. Title/Relationship of the Individual if Signing in a Representative Capacity	14C. Date *(MM-DD-YYYY)*

FOR COUNTY OFFICE USE ONLY

15. Receiving State and County	16. Date Filed *(MM-DD-YYYY)*	17. Time Filed

COUNTY FSA COMMITTEE ☐ ASSIGNEE ☐ PRODUCER ☐

Close

Close

CCC-36 (09-09-09) Page 2

SPECIAL PROVISIONS RELATING TO ASSIGNMENTS

A. Assignment is effective for all counties unless a specific county is entered in Item 7 or Item 11.

B. If the assignor assigns a specified value of payments to more than one assignee:

1. CCC and FSA will recognize assignments for each program per program year or group of years if multi-year is selected.

2. Assignments will be honored in chronological sequence based on the order of filing with the county FSA

C. The payment due the producer may be applied first against indebtedness owing by the producer to the United States, including debts arising after the execution of a Form CCC-36, which may be offset in accordance with the regulations governing, 7 CFR Parts 3, 1403, and 1951, and any balance will be subject to assignment.

D. Neither the United States of America, the Commodity Credit Corporation, the Secretary of Agriculture, any disbursing officer, nor any other Government employee or official shall be subject to any suit or liable for payment of any amount if payment is inadvertently made to the assignor without regard to this assignment.

E. This assignment does not extend to any successor of the assignee, nor may the assignee re-assign this assignment.

F. The assignee's payment is subject to offset for any delinquent Federal debt owed by the assignee.

18A. COUNTY FSA OFFICE NAME AND ADDRESS *(Including Zip Code)*

18B. TELEPHONE NO. *(Including area code)*:

NOTE: *The following statement is made in accordance with the Privacy Act of 1974 (5 USC 552a – as amended). The authority for requesting the information identified on this form is 7 CFR Part 1404 and the Commodity Credit Corporation Charter Act (15 U.S.C. 714). The information will be used to allow the producer to authorize CCC to make a program payment to an assignee. The information collected on this form may be disclosed to other Federal, State, Local government agencies, Tribal agencies, and nongovernmental entities that have been authorized access to the information by statute or regulation and/or as described in applicable Routine Uses identified in the System of Records Notice for USDA/FSA-2, Farm Records File (Automated). Providing the requested information is voluntary. However, failure to furnish the requested information will result in a determination that a payment to the assignee cannot be made.*

According to the Paperwork Reduction Act of 1995, an agency may not conduct or sponsor, and a person is not required to respond to, a collection of information unless it displays a valid OMB control number. The valid OMB control number for this information collection is 0560-0183. The time required to complete this information collection is estimated to average 10 minutes per response, including the time for reviewing instructions, searching existing data sources, gathering and maintaining the data needed, and completing and reviewing the collection of information. ***RETURN THIS COMPLETED FORM TO YOUR COUNTY FSA OFFICE.***

The U.S. Department of Agriculture (USDA) prohibits discrimination in all its programs and activities on the basis of race, color, national origin, age, disability, and where applicable, sex, marital status, familial status, parental status, religion, sexual orientation, genetic information, political beliefs, reprisal, or because all or part of an individual's income is derived from any public assistance program. (Not all prohibited bases apply to all programs.) Persons with disabilities who require alternative means for communication of program information (Braille, large print, audiotape, etc.) should contact USDA's TARGET Center at (202) 720-2600 (voice and TDD). To file a complaint of Discrimination, write to USDA, Director, Office of Adjudication and Compliance, 1400 Independence Avenue, SW., Washington, DC 20250-9410, or call toll-free at (866) 632-9992 (English) or (800) 845-6136 (Spanish) or (800) 877-8339 (TDD) or (866) 377-8642 (Federal-relay). USDA is an equal opportunity provider and employer.

Close

Appendix C: Recommendation for Reimbursement Form

Provide Supplier Reimbursement for Management Practices to: _____

_____

Application ID: _____

Date: _____

RECOMMENDATION FOR REIMBURSEMENT
(SSJID On-Farm Water Conservation Program, 2011)

1. Applicant name _____
2. Mailing address _____
3. Telephone # _____ Email _____
4. Assessor's Parcel Number (APN) _____
5. SSJID Delivery Location (example: "_____") _____
6. Field size (acres) _____ 6. Crop _____
7. Tax ID# for recipient of reimbursement _____

8. Conservation Measures Implemented:

   Physical Improvement(s): _____

   Management Practice(s)[1]: _____

   Grower Proposal: _____
9. Field Visit Date: _____ SSJID Representative: _____
10. Conservation Measure Implemented According to Applicable Standards? ___ Yes ___ No
11. Summary of Recommended Cost Share Reimbursements

Conservation Measure	Recommended Reimbursement	
	$ per Field	$ per Acre
Delivery Measurement for Pumped Deliveries	$_____	
Conversion from Flood to Sprinkler Irrigation		$_____
Conversion from Flood to Drip Irrigation		$_____
Tailwater Recovery System to Prevent Runoff		$_____
Scientific Irrigation Scheduling[1]	$_____	
Soil Moisture Monitoring[1]	$_____	
Other (please describe): _____ _____	$_____	$_____

TOTAL RECOMMENDED REIMBURSEMENT FOR FIELD $_____

Submitted By SSJID Representative: _____ Date _____

Approved By Program Manager: _____ Date _____

_____

[1] Payment for these conservation measures to be issued to service provider listed at upper left of page, if applicable.

Appendix D: Sample Field Visit Record

Application ID: _____

Date: _____

FIELD VISIT RECORD

1. Date _____ SSJID Representative: _____
2. Applicant _____
3. Assessor's Parcel Number (APN) _____
4. SSJID Delivery Location (example: "_____") _____
5. Conservation Measures Implemented:

   Physical Improvement(s): _____

   Management Practice(s): _____

   Grower Proposal: _____
6. Purpose of Field Visit: Verify Implementation to Standards _____ Other (explain): _____

_____

_____

7. Conservation Measure Implemented According to Applicable Standards? ___ Yes ___ No

List applicable standards, and deficiencies, as applicable: _____

_____

_____

_____

_____

_____

CHECKLIST

___ Sketch of Field Layout (include field boundary, delivery point, wells, irrigation system components, drainage outlets, etc.)

___ Photographs (include crop, delivery location, wells, irrigation system components, drainage outlets, etc.)

___ Specific materials listed in grower cost documentation. Verify presence of components, including pump mfr. and capacity, pipe materials and dimensions, filters, etc. (as applicable)

Appendix E: Participation Projections Based on Available Funding

The following table (Table E-1) provides a projection of the number of fields and acres participating in the program in 2011 based on available funding and assumptions related to cost share amounts per field, field size, and other factors. These estimates are meant to provide a rough estimate of the number of applications that will be approved and the corresponding administrative requirements to aid in District projections of staffing required to implement the Program. Note that in the totals at the bottom of the table, it is assumed that all fields converting to sprinkler or drip/micro irrigation will also participate in delivery measurement for pumped deliveries.

Table E-1. Project Participation Expressed as Number of Fields and Acres to Support Projections of Staffing Requirements.

Conservation Measure Category	Conservation Measure	Number of Fields	Approx-imate Acres	Unit Cost Share per field	Unit Cost Share per acre	Total Cost Share	Category Total	Max. per Grower for Measure
Physical Improvements	Delivery Measurement for Pumped Deliveries	42	800	$4,500		$ 190,000	$ 855,000	NA
	Conversion from Flood to Sprinkler Irrigation	21	424		$825	$ 350,000		$25,000
	Conversion from Flood to Drip Irrigation	8	152		$825	$ 125,000		$25,000
	Tailwater Recovery System to Prevent Runoff	16	320		$600	$ 190,000		$25,000
Management Practices	Scientific Irrigation Scheduling	21	420	$2,250		$ 47,500	$ 95,000	$5,000
	Soil Moisture Monitoring	42	840	$1,125		$ 47,500		$5,000
Grower Proposals	Grower Proposed Conservation Measures	19	380		$500	$ 190,000	$ 190,000	$25,000
	TOTALS	**142**	**2,760**			**$ 1,140,000**	**$ 1,140,000**	

ON-FARM WATER CONSERVATION PROGRAM
PROGRAM DESCRIPTION

SOUTH SAN JOAQUIN IRRIGATION DISTRICT

Table of Contents

Background and Objectives 2

Enrollment Process 3

Solicitation and Application Process 3

Eligibility Requirements 4

Selection Process 5

Conservation Measures 5

Physical Improvements 6

Delivery Measurement for Pumped Deliveries 6

Conversion from Flood to Sprinkler or Drip/Micro Irrigation 7

Tailwater Recovery Systems to Prevent Runoff 9

Management Practices 10

Scientific Irrigation Scheduling 10

Soil Moisture Monitoring 10

District Services 11

Valve Packing 11

Grower Proposals 12

Overview 12

Proposal Requirements 12

Evaluation Criteria 12

Applicable Standards and Specifications 13

Determination of Estimated Costs and Cost Share Amounts 13

Maximum Cost Share Payment per Grower 13

Interaction with Other, Non-District Programs 13

Budget Tracking 14

Payment Approval and Processing 15

Monitoring and Verification 15

APPENDIX A: Application for Program Participation A-1

APPENDIX B: Applicable NRCS Conservation Practice Standards B-1

APPENDIX C: Consent to SSJID's Entry of Property to Read and Owner's Agreement to Maintain Flow Meter C-1

Background and Objectives

In the early 1900's, the South San Joaquin Irrigation District's system was built for flood irrigation. Over the years, the practices of growers have changed as they work to conserve water and to improve crop yields with the installation of more efficient irrigation systems and implementation of advanced farming practices. In recognition of the farmers' efforts, and to comply with State law regarding agricultural water use. SSJID will provide financial incentives to accelerate improvements to the existing distribution system, enhance farm irrigation practices and provide for measurement of water usage. The intent of the Program is to engage as many growers as possible.

SSJID has developed an on-farm water conservation program (Program) to promote and incentivize on-farm physical improvements, irrigation management practices and water measurement (together referred to as Conservation Measures) that promote water conservation. From a Program perspective, water conservation is defined as use of less water to accomplish the same purpose by encouraging the efficient use of District surface water to meet crop water requirements.

SSJID's goal is to ensure that water is being used efficiently and that it is being put to beneficial use. The District intends to implement the on-farm water conservation program in order to work together to achieve the shared water management goals of the growers and the District. The Program will also support ongoing efforts to preserve existing water rights and to comply with current and emerging regulations.

The Program will help the District satisfy the new regulatory requirements of California Senate Bill SBx 7-7, which took effect January 1, 2010 and mandates measurement of individual farm deliveries and implementation of Efficient Water Management Practices (EWMPs) including both District and on-farm improvements. Additionally, it is anticipated that implementation of the Program will enhance the control of available surface water and groundwater supplies while promoting improved crop production within SSJID. This program, along with other initiatives the District is evaluating, will provide improve farm delivery measurement and support compliance with SBx 7-7.

Initially, a focused set of conservation measures has been included in the Program. In addition, a provision has been included for growers to propose other conservation measures they believe will result in improved water management on their fields, subject to District approval. In future years, additional conservation measures may be added based on experience with the Program.

Cost shares made available by the Program have been approved for the 2011growing season. This document provides a detailed description of the program to be implemented in 2011. Other aspects of the Program, including outreach activities to aid growers in identifying and implementing EWMPs may be implemented as an ongoing District service. Cost share offerings for the initial conservation measures for 2012 and 2013 will be the subject of future Board decision. For the 2011 Program, participants will be eligible for cost share payments for conservation measures implemented after the Program start date of Thursday, February 10, 2011. Applications will be available and accepted on the start date.

Enrollment Process

Solicitation and Application Process

The program will be launched in February 2011 through a mailing to SSJID water users, an announcement on the SSJID web site, and through the SSJID Newsletter. Additionally, a brief press release will be made to local news outlets.

Growers are invited to submit an application for one or more fields (Appendix A). For each field, the grower will select one or more conservation measures for implementation from a pre-approved list. Additionally, growers may propose additional conservation measures of their choosing. Fields will be selected by the District for implementation individually from each application provided that they are complete, pass minimum eligibility requirements, and provided that funding is available, as described in the following sections. Additionally, for some conservation measures (conversion from flood to sprinkler or drip/micro irrigation and grower proposed conservation measures not included on the preapproved list) the application will be reviewed to ensure compatibility with the SSJID distribution system and operations. The District reserves the right to restrict the amount of participation by a particular grower or a particular field.

Applications for physical improvements to a field (conversion to sprinkler or drip irrigation, tailwater recovery systems, or grower proposed conservation measures consisting of physical improvements), must be submitted by the landowner. Applications for management practices only (scientific irrigation scheduling or soil moisture monitoring) may be submitted by a lessee. For additional information, contact Program Manager Julie Vrieling at (209) 249-4675 or email jvrieling@ssjid.com.

As mentioned above, each application must be complete to be considered for inclusion in the Program. A complete application will have all applicable portions of the application filled in and, in the case of grower-proposed conservation measures, complete applications will include sufficient documentation to support evaluation of the conservation measure by the District.

Required documentation for grower-proposed conservation measures is described later in this Program Description under Grower Proposals.

Eligibility Requirements

The following eligibility requirements apply to all fields applying to enter the Program.

- Minimum Field Size – The minimum field size for inclusion in the Program is 10 acres, based on the net irrigated acreage of the field. The 10-acre threshold is additionally the acreage above which the recharge fee applies to fields within the District.

  Growers with fields less than 10 acres in size may submit an application. The District will evaluate whether there is sufficient potential for water conservation to be achieved to warrant the administrative time required to include the field in the Program. Proposals to enroll fields less than 10 acres in size will be evaluated on a case by case basis.

- Current SSJID Water User – For afield to be eligible for the Program, it must be or become a current SSJID surface water user as a condition to approval of any funding. For physical improvements, the participant agrees to use SSJID surface water for a period of not less than 5 years.

- Water Charges Current – At the time of enrollment, all of the grower's SSJID water charges must be current.

- On-Farm Measurement – For fields entering the Program with pumped deliveries, the participant agrees to install a meter to measure farm deliveries, in accordance with the conservation measure Delivery Measurement for Pumped Deliveries, as described in this document, including any reconfiguration of the pump discharge needed to facilitate accurate measurement while maintaining the pump flow rate. The participant will agree to perform repairs, maintenance, or replacement of water measurement devices as needed to ensure accurate measurement into the future.

  The participant agrees to allow SSJID to periodically record flow rate and delivery amounts using the meter and, at the District's option, to perform repairs, maintenance, or replacement as needed to ensure accurate measurement into the future. Additionally, all participants agree to allow meters to be installed by the District on a case-by-case basis for flood deliveries, if the District determines that site conditions support accurate delivery measurement.

- Satisfactory Performance in Prior Programs – If applicable, applications may be denied due to less than satisfactory performance in prior District programs.

- Cost Share - The District's maximum share of cost will be a set percentage of the participant's net cost after all other sources of cost contribution are taken into account, up to the maximum approved cost share.

- Program Award/Modification – the District will review and select applications for participation in the Program based on its determination of which applications best meet the Program objectives. The District may modify the terms for participation in the Program at any time, but will not reduce its commitment applicable to a particular field after a participant has received notice of approval from the District.

Selection Process

Fields will be considered on a first-come, first-served basis. An application will be considered approved when the District issues written notice of approval to the applicant at the address specified on the application. The terms of approval and the conditions for District payment will be stated in the notice. Fields will be considered for approval until available funds allocated to each conservation measure of the Program are fully committed for each year, based on the assumption that actual reimbursement costs for cost share payments, as described later in this document, will be the maximum allowable payment per field. If after actual payments are made remaining funds are available, additional fields will be considered in the order in which their applications were received.

In order to encourage adoption of a variety of conservation measures, a total budget will be allocated for each conservation measure, including grower-proposed measures and District-provided valve packing services, as described in the Budget Tracking section of this document.

Approved conservation measures must be completed within 1 calendar year of the date of approval to be considered eligible for cost share payments. Requests for reimbursement must be submitted to the District within the 1 year period. Conservation measures started prior to the approval date are not eligible for cost share payments.

Conservation Measures

Conservation measures as described herein are classified as either physical improvements or management practices. Physical improvements include conservation measures involving substantial physical changes to a field. Management practices include collection of information and development of recommendations to aid in improved irrigation management to meet crop water needs.

All measures must be constructed or implemented according to Program standards prior to receiving reimbursement. For physical improvements, all measures must have been inspected

and approved by SSJID staff prior to reimbursement. For management practices, payment will be made following the receipt of operational reports (soil moisture monitoring data and/or irrigation scheduling recommendations) under the provision that service provider will provide these data for the full irrigation season for which the field is enrolled in the Program. For both physical improvements and management practices, documentation of costs must be provided to the District's satisfaction prior to reimbursement.

As described in the Background and Overview section of this Program Description, for the 2011 Program, participants will be eligible for cost share payments for conservation measures implemented after the Program start date of February 10, 2011.

Physical Improvements

Delivery Measurement for Pumped Deliveries

Delivery measurement for pumped deliveries consists of installing a flow meter to measure SSJID water deliveries for existing or new pumped SSJID deliveries. In some cases, the existing pump discharge piping may need to be reconfigured to provide an adequate straight section of pipe without bends or other obstructions to allow for accurate flow measurement using a flow meter.

This conservation measure is applicable to any case in which SSJID water is delivered to a pump that pressurizes irrigation water for application via a sprinkler, drip, or micro system. Minimum standards for the measure are:

- McCrometer Ultra Mag flow meter, Seametrics AG2000 Irrigation Magmeter, or approved equal
- Installed with at least 3 diameters of straight pipe upstream of meter and 2 diameters of straight pipe downstream of meter (see Figure 1)
- Provided with continuous power supply
- Equipped with telemetry hardware allowing integration to the District's Supervisory Control and Data Acquisition (SCADA) System.
- The participant agrees to perform repairs, maintenance, or replacement of water measurement devices as needed to ensure accurate measurement into the future.
- The participant agrees to allow the District to record delivery flow rates and volumes periodically for the life of the meter and to allow the District, at its option, to perform any repair, maintenance, or replacement, as needed to ensure accurate measurement into the future.
- The participant must sign an SSJID agricultural Meter Service Agreement (Appendix C) as part of implementation of this conservation measure.

- The participant agrees to allow the District, at its option, to install telemetry, including but not limited to a solar panel, mast, antenna and other necessary equipment to remotely monitor delivery flows using the flow meter.

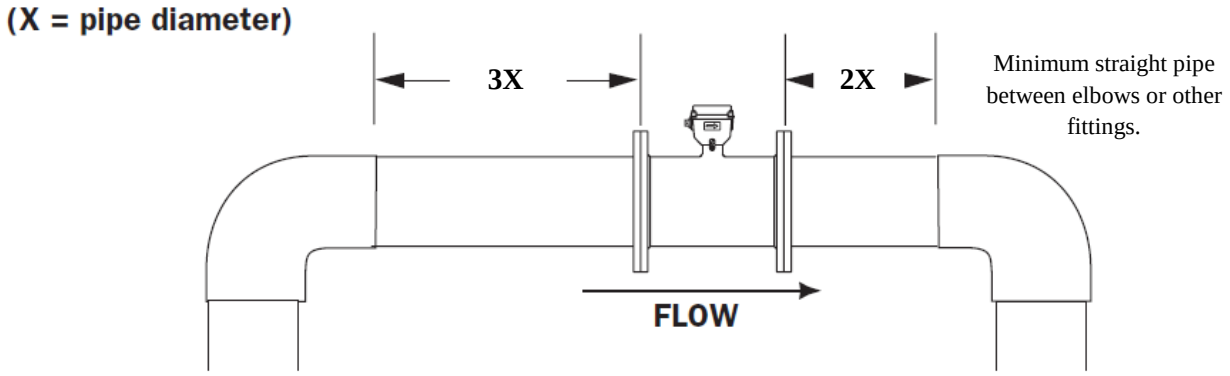

Figure 1. Example Magnetic Flow Meter Installation.

This measure will be included with any participating fields installing a sprinkler or drip irrigation system as described under the following conservation measure. All growers implementing this measure are required to agree to allow the District to read the flow meter periodically for purposes of delivery record keeping for the life of the device.

The estimated cost for planning purposes is $5,650 per location based on the estimated purchase and installation cost of a 12” mag meter, plus a contingency to allow for re-plumbing of pipe discharge to allow for adequate length of straight pipe to install the meter in some cases.

The District’s cost share for delivery measurement of pumped deliveries will be 80% of the actual cost, not to exceed $4,500.

Conversion from Flood to Sprinkler or Drip/Micro Irrigation

Conversion from flood to sprinkler or drip irrigation consists of installing a sprinkler, drip, or microspray irrigation system on an existing field that is currently flood irrigated. The conservation measure includes installation of the pump, filtration, mainlines, laterals, and emitters for the system. Adoption of this conservation measure additionally requires installation of an SSJID approved sump to allow for pumping of canal water along with adoption of the conservation measure Delivery Measurement for Pumped Deliveries, described previously.

Conversion from flood to sprinkler or drip irrigation is generally applicable throughout SSJID, except where delivery system physical and operational constraints limit the District’s ability to meet the delivery needs of sprinkler or drip/micro systems. Although the primary crops currently irrigated using sprinkler or drip irrigation are trees and vines, this conservation measure could also apply to the installation of a sprinkler system to irrigate pasture or field crops, for

example. **Applications for conversion to sprinkler or drip/micro irrigation will be evaluated on a case by case basis to determine whether the District can continue to provide canal water to meet crop water needs following irrigation system conversion. Only fields located such that the District can supply surface water at the flow rate and irrigation intervals required after conversion will be approved.**

Minimum standards for this measure have been identified based on the NRCS Conservation Practice Standards listed in Table 1, below. These standards are included in Appendix B of this document.

Table 1. NRCS Conservation Practice Standards Applicable to Conversion from Flood to Sprinkler or Drip Irrigation.

NRCS Conservation Practice Standard	Applies to Conversion from Flood to:	
	Sprinkler	Drip or Micro
Irrigation System, Sprinkler (442)	✓	
Irrigation System, Microirrigation (441)		✓
Pumping Plant (533)	✓	✓
Underground Plastic Pipe (430DD and 430EE, as applicable)	✓	✓

Additionally, the following requirements developed by SSJID shall apply:

- No filters may back flush to District pipelines or open canals
- Each system must be designed by an Irrigation Association Certified Irrigation Designer
- Design Distribution Uniformity must be at least 75% for sprinkler systems and at least 90% for drip or micro systems
- Participants are responsible for submitting an Application for Structure Permit and constructing a District-approved sump prior to receiving reimbursement for system installation costs under this conservation measure.

The estimated cost for conversion from flood to sprinkler or drip/micro for planning purposes is $1,650 per cropped acre based on estimated materials and installation costs of a complete system including pump, filtration, mainlines, laterals, and emitters. The estimated costs are based on discussion with local irrigation suppliers and review of NRCS EQIP cost estimates. Reimbursement for sump costs will be made separately through the ongoing District sump program. Reimbursement for flow meter costs will be made separately under the Program based

on the Delivery Measurement for Pumped Deliveries conservation measure, described previously.

The District's cost share for conversion from flood to sprinkler or drip irrigation will be 50% of the actual cost, not to exceed $825 per cropped acre. Additionally, the cost share payment will be limited to a maximum of $25,000 per grower for each measure. Conversion from flood to drip and conversion from flood to sprinkler are considered different measures for purposes of determining the maximum cost share per grower for each measure. As described, this cost share does not include installation of a sump or delivery measurement for pumped deliveries, which will be treated separately.

In addition to conversion from flood to sprinkler or drip/micro irrigation, the District may consider conversion of sprinkler to drip/micro irrigation or replacement of old sprinkler or drip/micro systems.

Tailwater Recovery Systems to Prevent Runoff

Tailwater Recovery Systems to Prevent Runoff consist of systems to collect and convey tailwater to the head of the field from which the tailwater was generated or another nearby field for the purpose of recovering and reapplying the tailwater to supplement irrigation deliveries. For this Program, tailwater recovery systems are targeted at fields that periodically drain tailwater back into the SSJID distribution system where it currently is delivered to a downstream user or spills from the system. SSJID discourages and in the future may no longer allow drainage of tailwater into the distribution system. This conservation measure applies to any field for which tailwater is produced during irrigation that drains back to the SSJID irrigation system. It is anticipated that this only occurs for flood irrigated fields.

Minimum standards for this measure have been identified based on the NRCS Conservation Practice Standards for Irrigation System, Tailwater Recovery (447), Pumping Plant (533), and Underground Low Pressure Plastic Pipe (430EE), included in Appendix B of this document.

The estimated cost of tailwater recovery systems for planning purposes is $1,200 per cropped acre based on estimated materials and installation costs of a complete system including tailwater pond, tailwater return pipeline, and pump. The estimated costs are based on estimated quantities and unit costs for system components and based on review of NRCS EQIP cost estimates.

The District's cost share for tailwater recovery systems will be 50% of the actual cost, not to exceed $600 per cropped acre. Additionally, the cost share payment will be limited to a maximum of $25,000 per grower for this measure.

The District will also consider grower proposals to reduce drainage through laser land leveling and deep ripping, for example. Interested growers may submit a proposal as described under "Grower Proposals," included later in this document.

Management Practices

Scientific Irrigation Scheduling

Scientific Irrigation Scheduling consists of the determination of the frequency, rate, and duration of irrigation application needed to meet crop water requirements while minimizing excess tailwater and deep percolation. Typically, this determination is based on a combination of soil moisture monitoring and root zone water balance calculations based on estimates of crop water use (evapotranspiration, or ET). Scientific irrigation scheduling is applicable to all irrigated crops, regardless of irrigation system type or soil conditions.

In most cases, the optimum frequency, rate, and/or duration of irrigation is constrained by available water supply, the delivery system, the soil, or the irrigation system itself. In the case of SSJID, the delivery frequency and flow rate are generally fixed under current system operation, providing flexibility almost exclusively in the duration of irrigation.

Under the Program, the District requires that scientific irrigation scheduling be conducted by approved service providers using proven technologies. Additionally, the District requires that irrigation recommendations be submitted to both the participating grower and to the District by the service provider. To request a list of preapproved service providers, contact Julie Vrieling at (209) 249-4675 or email jvrieling@ssjid.com.

The estimated cost of scientific irrigation scheduling for planning purposes is $3,000 per field per season, which represents the average seasonal cost for a consulting service to provide irrigation recommendations for an individual field based on discussion with consultants serving the San Joaquin Valley. The difference in cost between consultants depends largely on whether continuously recording soil moisture monitoring equipment is installed in the field; costs will likely be substantially less for weekly field visits using portable soil moisture monitoring equipment.

Unlike physical improvements, the District will pay a portion of the total cost of the scientific irrigation scheduling service directly to the service provider. The portion that the District is willing to pay will be a one-time payment of 75% of the actual cost, not to exceed $2,250 per field for 2011. The maximum payment for Scientific Irrigation Scheduling for 2011 will be limited to $5,000 per grower.

Soil Moisture Monitoring

Soil Moisture Monitoring consists of tracking the moisture content of the crop root zone over the course of the growing season to evaluate whether irrigation practices are sufficient to maintain adequate soil moisture content while limiting excess deep percolation. Soil moisture monitoring is a key component of scientific irrigation scheduling and is applicable to all irrigated crops, regardless of irrigation system type or soil conditions. For the Program soil moisture monitoring

is offered as a stand-alone conservation measure to assist growers in tracking soil water content, or it may be implemented as part of scientific irrigation scheduling, described previously.

Under the Program, the District requires that soil moisture monitoring be conducted by approved service providers using proven technologies. Additionally, the District requires that duplicate soil moisture monitoring reports be submitted to both the participating grower and to the District by the service provider. To request a list of preapproved service providers, contact Julie Vrieling at (209) 249-4675.

The estimated cost of soil moisture monitoring for planning purposes is $1,500 per field per season, which represents the average seasonal cost for an agronomic consulting service to provide soil moisture monitoring reports for an individual field. The estimated costs are based on discussion with agronomic consultants serving the San Joaquin Valley. The difference in cost between providers depends largely on whether continuously recording soil moisture monitoring equipment is installed in the field; costs will likely be substantially less for weekly field visits using portable soil moisture monitoring equipment.

Unlike physical improvements, the District will pay a portion of the total cost of the soil moisture monitoring service directly to the service provider. The portion of the cost incurred that the District is willing to pay will be 75% of the actual cost, not to exceed $1,125 per field for 2011. The maximum payment for Soil Moisture Monitoring for 2011 will be limited to $5,000 per grower.

District Services

Valve Packing

Valve packing is a service that was traditionally provided by the District to repack irrigation valves to reduce valve leakage. Valve packing is applicable wherever large flood irrigation valves installed on District pipelines are used. Growers are to make arrangements to have their valves packed by contacting Julie Vrieling at (209) 249-4675. District staff will repack the valves, including removal and reinstallation, as needed. Valves will be packed according to manufacturer specifications, if applicable.

Growers will be charged a fee for valve packing to cover District labor and materials costs for repacking the valves. Removal and reinstallation of the valves, if needed, will not be charged to the grower. The District may restrict the availability of this service depending on the availability of personnel.

Grower Proposals

Overview

As part of the Program, growers are given the opportunity to submit proposals for District cost share to implement conservation measures in addition to those described previously. These proposals will be evaluated on a case by case basis as described below. The allowance for individual grower proposals provides flexibility in the types of conservation measures included. These measures could include laser land leveling, deep ripping, installation of pipelines to replace open ditches, or other measures identified by the applicant as effective water conservation measures for his or her field.

Proposal Requirements

Grower proposals to implement conservation measures not listed previously must include the following information:

- Description of conservation measure to be implemented, including a description of all physical changes to the field and corresponding irrigation management changes
- Itemized cost list giving estimated costs of major system components, with supporting documentation if available
- Sketch of field showing field location and physical changes to field, if applicable
- Description of how the proposed conservation measure will result in water conservation

Evaluation Criteria

Proposals for additional conservation measures will be evaluated by SSJID staff based on the following considerations:

- Completeness of proposal – the proposal must include the requested information at a sufficient level of detail to allow for evaluation by the District.
- Demonstrated effectiveness – the proposed conservation measure must be based on a demonstrated method of reducing deep percolation, tailwater, or other losses (i.e., seepage from farm ditches or evaporation). The proposed measure must be demonstrated conclusively in the SSJID area or other areas with sufficiently similar conditions, and it must be suitably applied. The District may consider new innovations, provided that they are accompanied by a clear description of how the measure will result in water conservation.
- No special administrative requirements – the proposed measure must not cause a burden to SSJID with respect to the continued delivery of irrigation water or to the administration of the Program. The measure must be observable to ensure that implementation of the measure can be documented for verification purposes.

Applicable Standards and Specifications

Proposed measures must be implemented to existing industry standards (e.g., NRCS conservation practice standards), to the extent that established standards exist. In all cases, SSJID may place requirements on measure implementation to ensure that the measure has the potential to be effective and does not provide an undue burden on SSJID water delivery practices or Program administration. Standards will be identified on a case by case basis but will be applied uniformly to all fields proposing to implement a given conservation measure.

Determination of Estimated Costs and Cost Share Amounts

Estimated conservation measure costs will be developed by reviewing grower estimates of costs along with other available sources including NRCS cost share lists and information from irrigation equipment providers or other appropriate sources. Cost share percentages will be determined by SSJID staff on a case by case basis but will be applied uniformly to all fields proposing to implement a given conservation measure. Cost share percentages will be set in part based on relative benefits to the grower and to the District of implementing the measure. In general, it is anticipated that physical improvements will be funded at up to 50% of implementation cost, and management practices will be funded at up to 75% of implementation cost, but the particular cost share will be determined on a case by case basis. In all cases, cost share amounts will be limited based on the estimated implementation cost, which will be determined by staff before the proposal is approved. Additionally, the cost share payment will be limited to a maximum of $25,000 per grower for this measure.

Maximum Cost Share Payment per Grower

In addition to the payment limitations described previously for each conservation measure, the total cost share for 2011 for all fields enrolled by a grower will be limited to $50,000.

Interaction with Other, Non-District Programs

Other Programs may provide cost share payments for implementing conservation measures included in this Program. For example, programs offered by the Natural Resources Conservation Service of the USDA, such as the Environmental Quality Incentives Program (EQIP), offer cost share of 50% (or more in some cases) to cover the cost of installing sprinkler systems, drip/micro systems, tailwater recovery systems, or other on-farm improvements.

Participation in the SSJID On-Farm Water Conservation Program does not prevent growers from participating in EQIP or other Federal programs. Similarly, participation in EQIP or other Federal programs does not prevent participation in the SSJID On-Farm Water Conservation Program.

Participants receiving funding from other programs such as the NRCS EQIP program are required to disclose this information on the Field Application for each field. If selected,

applicants also participating in EQIP or other programs will be required to assign conservation measure payments from NRCS (or other agencies, as applicable) to SSJID. The SSJID cost share will then be calculated based on the net cost to the grower of implementing the conservation measure, calculated as the total cost minus the cost share received from the non-district program. The grower will then be paid the full amount of the NRCS cost share, plus the SSJID cost share.

Budget Tracking

The total budget for cost share payments is $1.14 million for the first year of the Program (2011). Initially, cost share amounts will be allocated for each conservation measure as described in Table 2.

Table 2. Initial 2011 Budget Amounts by Conservation Measure Category.

Conservation Measure Category	2011 Budget by Conservation Measure
Physical Improvements	
Delivery Measurement for Pumped Deliveries	$ 190,000
Conversion from Flood to Sprinkler or Drip/Micro	$ 475,000
Tailwater Recovery Systems to Reduce Runoff	$ 190,000
Management Practices	
Scientific Irrigation Scheduling	$ 47,500
Soil Moisture Monitoring	$ 47,500
Grower Proposals	$ 190,000
TOTAL	$ 1,140,000

The budget amounts will be reviewed periodically and may be adjusted based on the number of applications received for each conservation measure at the discretion of the Program Manager.

As applications for participation are received, they will be added to a list in the order they are received. At any given time, the applications subject to review and approval will be limited to those for which the total potential cost share is less than the total available budget by conservation measure category. If upon review, the District does not approve an application, the associated cost share will be released to fund applications received later within that category. As documentation of actual costs is received by the District from participating growers, the difference between the cost share limit and the actual cost share amount paid for each category, if any, will likewise be released to fund applications received later in the order in which they were received.

Payment Approval and Processing

Upon receipt of a request for payment and documentation showing actual payment of the incurred conservation measure implementation costs from an approved applicant, the District will verify that the measure has been implemented (as described in the following section) and payment will be issued based on the Program cost share percentage for the measure or measures implemented and based on the actual cost, not to exceed the cost share limit for the measure or measures.

Requests for reimbursement must be accompanied by documentation of implementation costs, including invoices and receipts from equipment and service providers, along with proof of payment. Costs incurred by the grower internal to his or her operation that are associated with the installation of the conservation measure are not considered eligible for reimbursement.

Payments will be issued as a separate check to the participating grower, rather than as a reduction in water charges. It is anticipated that payment will be made within 30 days of the District's verification that the measure was implemented.

Monitoring and Verification

Monitoring and verification of implementation of conservation measures will be accomplished through a combination of documentation of implementation costs (receipts and payments) and operational reports (flow measurement records, soil moisture monitoring reports, and irrigation recommendations), along with field visits to verify that physical improvements are implemented according to Program standards. Additionally, the District will seek feedback from participating growers in the form of interviews or questionnaires with the objective of evaluating the Program and documenting changes to irrigation practices resulting from conservation measure implementation.

APPENDIX A: Application for Program Participation

For District Use Only
Application ID: _____
Date Received: _____

APPLICATION FOR ON-FARM WATER CONSERVATION PROGRAM

1. Applicant/Landowner name _____ email _____
2. Mailing address _____
3. Telephone # _____

SUBMIT COMPLETED APPLICATION TO SSJID

1. For applications including physical improvements (delivery measurement for pumped deliveries, conversion to sprinkler or drip/micro irrigation, tailwater recovery systems, etc.), the application must be submitted by the landowner.
2. The application must include all fields for which you wish to participate in the On-Farm Water Conservation Program at this time. A detailed design plan must be submitted with the application.
3. Property Owner's signature is required on the application for each leased field.
4. Your application will be reviewed and processed according to District policy and as described in the Program Description. A determination will be made as to the eligibility and potential effectiveness of the proposed conservation measure or measures for each field, and a recommendation will be made to the General Manager, Jeff Shields.
5. Following review, you will be sent a letter summarizing the fields and conservation measures approved for implementation and providing explanation of why any fields or conservation measures were not approved, if applicable.
6. **COST SHARE PAYMENTS ARE NOT GUARANTEED UNTIL YOUR APPLICATION HAS BEEN APPROVED.**
7. If you have any questions concerning your Application please feel free to contact Julie Vrieling at (209) 249-4675.
8. By signing below, you agree to implement the conservation measures described in this application and to abide by all Program requirements as described in the Program Description.

APPLICANT/LANDOWNER SIGNATURE _____

DATE _____

For District Use Only

Application ID: _____

FIELD APPLICATION FOR ON-FARM WATER CONSERVATION PROGRAM

Complete one field application for each field to be included in the Program. All measures must be implemented after the application approval date and completed within 1 year to be eligible for reimbursement.

BASIC INFORMATION

1. Applicant/Landowner name _____
2. Assessor's Parcel Number (APN) _____
3. SSJID Delivery Location (example: Lat. "Wc" Station 120) _____
4. Field size[1] (acres) _____ 6. Crop _____

PROPOSED PHYSICAL IMPROVEMENTS

(Select up to one of the following by entering an "**X**" to the right of the description)

1. Delivery Measurement for Pumped Deliveries _____
2. Conversion from Flood to Sprinkler Irrigation[1] _____
3. Conversion from Flood to Drip/Micro Irrigation[2] _____
4. Tailwater Recovery System to Prevent Runoff _____

PROPOSED MANAGEMENT IMPROVEMENTS

(Select up to one of the following)

1. Scientific Irrigation Scheduling _____
2. Soil Moisture Monitoring _____

OTHER CONSERVATION MEASURES[2] _____

For other conservation measures, attach one or more sheets including the following information as described in the Program Description:

- Description of conservation measure to be implemented, including description of physical changes to the field and irrigation management changes
- Sketch of field showing field location and physical changes to field, if applicable
- Description of how the proposed conservation measure will result in water conservation

Have you applied for funding for these conservation measures under any other programs, such as NRCS EQIP? Yes ___ No ___ (cost share for participants in other programs will be based on net cost to the grower after accounting for cost share from other programs)

APPLICANT/LANDOWNER SIGNATURE[3] _____ **DATE** _____

_____

[1] Fields less than 10 acres in size will be considered for participation on a case-by-case basis based on the potential to achieve water conservation as described in the Program Description.

[1] Conversion from flood to sprinkler or drip/micro must include the delivery measurement for pumped deliveries conservation measure.

[2] Other conservation measures will be considered as described in the Program Description.

[3] By signing this application, the applicant/landowner agrees to provide permission for NRCS or other funding agencies, as applicable, to release all information concerning existing or future applications for funding regarding their property to the District.

APPENDIX B: Applicable NRCS Conservation Practice Standards

The following NRCS Conservation Practice Standards are attached:

1. Irrigation System, Sprinkler (442)
2. Irrigation System, Microirrigation (441)
3. Pumping Plant (533)
4. High Pressure Underground Plastic Pipe (430DD)
5. Low Pressure Underground Plastic Pipe (430EE)
6. Irrigation System, Tailwater Recovery (447)

APPENDIX C: Consent to South San Joaquin Irrigation District's Entry of Property to Read and Owner's Agreement to Maintain Flow Meter

AFTER RECORDING RETURN TO:

SOUTH SAN JOAQUIN IRRIGATION DISTRICT
P.O. Box 747
Ripon, CA 95366

CONSENT TO
SOUTH SAN JOAQUIN IRRIGATION DISTRICT'S
ENTRY OF PROPERTY TO READ
AND OWNER'S AGREEMENT TO MAINTAIN FLOW METER

The undersigned owner of the property located at _____, APN _____ ___("Property") and further described in the attached Exhibit "A", has, with the financial assistance of South San Joaquin Irrigation District ("District"), installed a flow meter to measure deliveries of District surface water to the Property. State law requires that starting in July 2012, the District base its water charges, at least in part, on the quantity of water it delivers. The District will use flow meter measurements in future water charges after its Board of Directors approves a policy that requires water charges be based at least in part on the measurement of quantity delivered.

Owner consents to the entry of District officers, employees or agents ("District Personnel") on the Property for the purposes of inspecting and reading the flow meter installed to measure deliveries of District surface water to the Property. District Personnel may enter the Property at any reasonable hour and on a monthly basis or at such other time as District reasonably determines to be necessary, to inspect the working condition of the meter and to record water usage. District shall also be permitted to enter the Property for the purpose of installing telemetry control hardware to the meter such that the meter can be read remotely. District Personnel may enter the Property outside any District easement area using marked District vehicles on available access roads, on foot or as Owner and District may otherwise agree. District shall use reasonable care to avoid interfering with Owner's farming operations.

Owner agrees to take no action that would prevent the meter from accurately measuring the volume of District surface water delivered to Owner's Property. If District determines that the meter is nonfunctioning, Owner agrees to repair or replace the meter at Owner's expense.

This Consent shall remain in effect until such time as deliveries of District surface water to the Property shall terminate as evidenced by recordation of an Irrigation Service Abandonment Agreement signed by District and Owner or Owner's success or in interest.

This Consent shall run with the land described above and be binding on Owner and Owners' heirs, successor and assigns.

SOUTH SAN JOAQUIN IRRIGATION DISTRICT

"DISTRICT"

By_____ Date:_____ By_____ Date:_____

John Holbrook, President Jeff Shields, Secretary

Board of Directors Board of Directors

"OWNER(S)"

By_____ Date:_____ By_____ Date:_____

Mailing Address: _____

_____

Phone Number:_____

SIGNATURES MUST BE NOTARIZED AND BE PER RECORDED DEED

ON-FARM WATER CONSERVATION PROGRAM
2012 ADMINISTRATIVE GUIDELINES

SOUTH SAN JOAQUIN IRRIGATION DISTRICT

November 2011

Table of Contents

Overview and Purpose 1
Program Administration Tool 1
Finance 2
Enrollment 2
Advertisement 2
Selection and Notification 3
Review and Evaluation of Grower Proposals for New Conservation Measures Based on Technical Merit 8
District Valve Packing Service 9
Monitoring and Verification 9
Field Visits 9
Documentation of Conservation Measure Implementation Costs 10
Operational Reports 10
Cost Share Payments 11
Program Tracking and Overall Management 11
Staffing Needs 12
Data Management 12
Appendix A: Request for Reimbursement Form A-1
Appendix B: Recommendation for Reimbursement Form B-1
Appendix C: Sample Field Visit Record C-1
Appendix D: Participation Projections Based on Available Funding D-1

Overview and Purpose

On October 27, 2009, the Board approved funding for an incentive-based on-farm conservation program ("Program") to promote water conservation within SSJID. On September 13, 2011, the Board approved funding for the 2012 Program in the amount of $1.14 million for cost share payments to growers to incentivize implementation of conservation measures. It is anticipated that the Program will be funded at a similar level in 2013. The Board may decide to fund the Program in later years at its discretion. It is anticipated that some aspects of the Program, including grower outreach and District-provided valve packing services will be provided on an ongoing basis.

The program will be administered by Julie Vrieling, On-Farm Water Conservation Program Manager, who will report to Sam Bologna, Engineering Department Manager and Jeff Shields, General Manager.

On September 13, 2011, the Board approved the 2012 Program structure as described in the 2012 Program Description. The 2012 Program Description describes the enrollment process, conservation measures included in the Program, budget tracking, payment approval and processing, and monitoring and verification. Additionally, the Program Description includes an application for enrollment and applicable NRCS conservation practice standards for on-farm improvements. The 2012 Program Description serves as a document describing how the Program works to SSJID growers and to the broader community.

The purpose of this document is to provide guidelines to District staff for management and administration of the 2012 SSJID On-Farm Water Conservation Program to be implemented November 7, 2011. It is anticipated that these guidelines will evolve over time along with the Program Description based on experience implementing the Program and based on changes to District facilities and operations as well as changes to farming practices within the District.

Program Administration Tool

The Program Administration Tool (PAT) consists of a spreadsheet tool with a record for each application and field that contains details of the application and conservation measures implemented, eligibility and selection results, and records of costs, payments, monitoring, and verification. The PAT provides a centralized location for records describing the Program while additionally supporting administration of the Program by allowing past and future payments to be tracked to guide the selection process, preventing approval of applications that could result in cost share payments exceeding the available budget.

Finance

Periodic reporting to District finance staff will be performed by the Program Manager in addition to submittal of payment requests for cost share payments to participants. Periodic reports will include projections of the timing and amounts of future cost share payments to support cash flow management. These reports will be generated on a monthly basis using the information stored in the PAT. Requests for cost share payments will be submitted to the finance staff as they are completed.

Enrollment

This section describes the process for enrollment, with an emphasis on staff activities needed to advertise the Program, select applications for cost share payments, and notify participants of the status of their applications. The enrollment process has been designed to provide flexibility to applicants in selecting fields and conservation measures while controlling SSJID administrative requirements and facilitating overall program management and planning. The aim of providing flexibility is to encourage widespread participation covering the range of crops, locations, and existing water management practices in the District.

Advertisement

As described in the 2012 Program Description, the 2012 Program will be launched in November 2011 through a mailing to SSJID water users and an announcement on the SSJID web site.

The following checklist has been developed for the Program Manager to develop and issue the advertisement:

1. Prepare mailing, website announcement, newsletter article, and press release for review
2. Arrange mailing to SSJID growers
3. Arrange for posting on SSJID web site
4. Arrange for inclusion of newsletter article in SSJID newsletter
5. Arrange for release of press release to local newspapers

The announcements will invite growers to apply for the Program by obtaining the Program Description and Application, either by picking up a copy at the District office in Manteca, by requesting a copy by mail, or by downloading the documents from the District web site. All requests will be handled in a timely manner to ensure equal opportunity for growers to apply for the Program.

Selection and Notification

Upon receipt, Program staff will record the date of receipt on the application and in the PAT. Applications will be reviewed by the Program Manager or Program staff assigned by the Program Manager and either approved or declined according to the following process:

1. Initial Review

   Review application for completeness and accuracy. A complete application will have all applicable portions of the application filled in and, in the case of grower-proposed conservation measures, complete applications will include sufficient documentation to support evaluation of the conservation measure by the District. Flag any missing or incomplete information, and either contact the applicant for clarification, or return the application with an explanation of the reason the application is being returned.

2. Eligibility Check

   Verify the eligibility of the application as follows:

   a. Minimum Field Size – The minimum field size for inclusion in the Program is 10 acres, based on the net irrigated acreage of the field.
   b. Applications for Fields Less than Minimum Size
      i. If an application is received for which a single conservation measure will serve multiple fields (for example a tailwater recovery system), the total acreage of the fields should be at least 10 acres.
      ii. If the field size (or total size of all fields with a single measure) is less than 10 acres, evaluate whether there is sufficient potential for water conservation to be achieved to warrant the administrative time required to include the Field in the Program. Consider the following:
         1. What is the potential quantity of water to be conserved?
         2. For each conservation measure, what is the potential cost share per acre? Is this cost substantially greater than for larger fields implementing the same conservation measure?
         3. What is the potential cost to the District per acre-foot of water conserved? How does it compare to current market values of water for transfer?
         4. Is the field devoted to productive agriculture?
      iii. Document all determinations of eligibility for fields less than 10 acres in size and obtain approval of Program Manager.
   c. Current SSJID Water User – For all fields, verify that the applicant is a current SSJID water user. Notify any applicants that are not current users that all fields submitted for funding must use or become approved to use SSJID surface water

before any cost share will be approved. For physical improvements, growers agree to use SSJID surface water for not less than 5 years.

d. Water Charges Current – Verify that water charges for all fields farmed by the applicant are current.
e. On-Farm Measurement – By signing the application, growers agree to implement on-farm delivery measurement in cases where the delivery is pressurized via an on-farm pump in accordance with the conservation measure "Delivery Measurement for Pumped Deliveries." Additionally, growers agree to allow the District to implement measurement in other cases, if practical. As a result, participating fields can be included in pilot delivery measurement programs implemented by the District to evaluate alternatives for on-farm delivery measurement, particularly for flood irrigated fields.
f. Satisfactory Performance in Prior Programs – If applicable, evaluate whether the applicant has performed satisfactorily in other Programs, such as the sump program. Document evidence and obtain approval of Program Manager for any denials of eligibility.

3. Secondary Review and Approval
   a. For eligible applications selecting one or more preapproved conservation measures, review the available Program budget based on prior cost share payments and projected payments for fields already selected but for which payments have not yet been issued. Using PAT, verify that the total of prior and projected payments is less than the available budget for each proposed conservation measure. If available budget remains, select the field for inclusion, subject to additional review.

   b. For applications with grower proposals to implement conservation measures not included in the preapproved list, evaluate the grower proposal as described later in this section. If approved based on technical merit, review the available Program budget based on prior cost share payments and projected payments for fields already selected but for which payments have not been issued. Using PAT, verify that the total of prior and projected payments for grower proposed conservation measures is less than the available budget. If available budget remains, select the field for inclusion, subject to additional review to ensure that implementation of the conservation measure would not place undue burden on the administration of the Program, the SSJID distribution system, or system operations.
4. Final Review and Approval
   a. For field applications for conversion from flood irrigation to sprinkler or drip/micro irrigation that have passed the initial approval process, submit the field application along with a map and other supporting information to (1) the

Engineering Department Manager, (2) the Water Operations Supervisor, and (3) the Maintenance Supervisor.

i. The Engineering Manager will review the application to determine whether the field can be served by SSJID within the physical constraints of the existing distribution system and make a determination whether to approve the application from an engineering perspective.
ii. The Water Operations Supervisor will review the application to determine whether the field can be served by SSJID within the operational constraints of the existing distribution system and make a determination whether to approve the application from an operations perpective.
iii. The Maintenance Supervisor will review the application to determine whether the field can be served by SSJID without causing undue increases to maintenance requirements.
iv. Denial of the application by any reviewer will be documented in writing providing the reasons that the field cannot be reasonably served following conversion to sprinkler or drip/micro irrigation.

b. For field applications for grower proposed conservation measures that have passed the initial approval process, the field application will be submitted along with a map or other supporting information as needed to (1) the Engineering Department Manager, (2) the Water Operations Supervisor, and (3) the Maintenance Supervisor as described above for field applications for conversion from flood irrigation to sprinkler or drip/micro irrigation. The review process for grower proposed conservation measures may be skipped, at the discretion of the Program Manager, if the proposed measure will clearly not impact the distribution system, operations, or maintenance.
c. Review of all applications will be completed within 30 days of receipt.
d. As part of the review process, the Director of the applicable Division will be given the opportunity to review the results of the review. The results will be summarized and provided by mail to the applicant.

5. Notification
   a. For each application, the applicant will be notified following the Final Review and Approval process by mail. Notifications will consist of the following:
      i. For approved fields, a copy of the field application will be provided, along with a description of any additional information or implementation requirements identified by the District as part of the review process. Additionally, a Request for Reimbursement form (Appendix A) will be provided to the applicant (hereafter referred to as participant). The following conditions of approval will be listed in the notification of approval:

1. The approval applies only to the approved conservation measures, which will be listed in the notification.
2. All approved conservation measures must be implemented following the date of approval and within 1 year of the date of approval to be eligible for cost share payments.
3. Implementation must be to applicable standards for each approved conservation measure, as described in the Prorgram Description.
4. The participating grower is to pay all costs of the project, with the exception of the District cost share for Scientific Irrigation Scheduling or Soil Moisture Monitoring, in which case the District will pay the supplier directly.

ii. For fields not selected, a copy of the application will be provided to the applicant, along with a description of why the field was not selected and supporting documentation.

The selection and notification process is summarized as a process diagram in Figure 1, below.

Figure 1. Process Diagram for Selection and Notification Process.

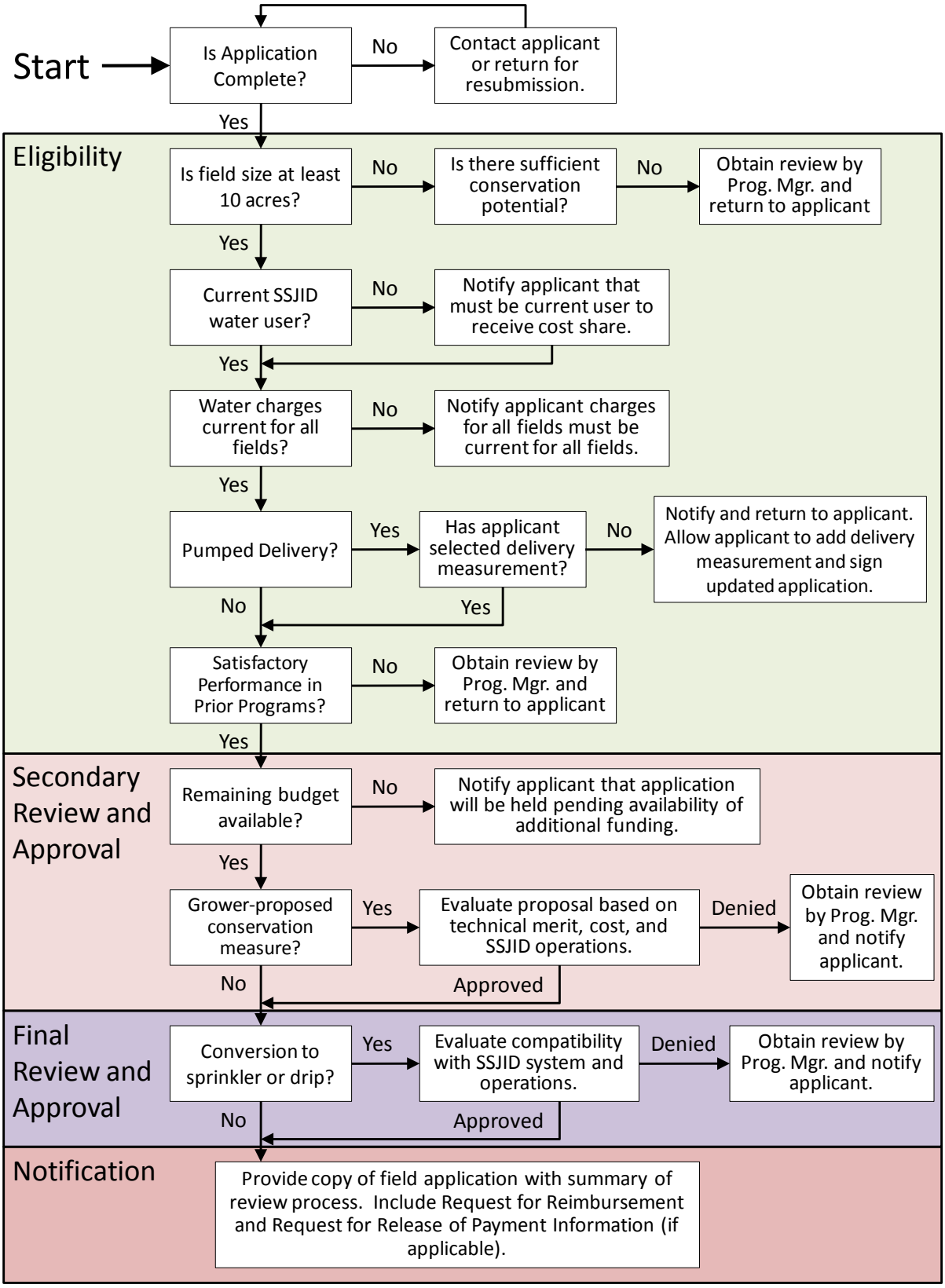

Review and Evaluation of Grower Proposals for New Conservation Measures Based on Technical Merit

Applicants have the option of proposing conservation measures not included in the preapproved conservation measure list for individual fields. For each field, applicants are required to submit the following information:

- Description of conservation measure to be implemented, including a description of all physical changes to the field and corresponding irrigation management changes
- Itemized cost list giving costs of major system components
- Sketch of field showing field location and physical changes to field, if applicable
- Description of how the proposed conservation measure will result in water conservation

Proposals for additional conservation measures will be evaluated by SSJID staff based on the following considerations:

- Completeness of proposal – the proposal must include the requested information at a sufficient level of detail to allow for evaluation by the District.
- Demonstrated effectiveness – the proposed conservation measure must be based on a demonstrated method of reducing deep percolation, tailwater, or other losses (i.e., seepage from farm ditches or evaporation). The proposed measure must be demonstrated conclusively in the SSJID area or other areas with sufficiently similar conditions, and it must be suitably applied. The District may consider new innovations, provided that they are accompanied by a clear description of how the measure will result in water conservation.
- No special administrative requirements – the proposed measure must not cause a burden to SSJID with respect to the continued delivery of irrigation water or to the administration of the Program. The measure must be observable to ensure that implementation of the measure can be documented for verification purposes.

For each application, staff will prepare a brief memorandum documenting findings related to the above considerations. Additionally, staff will identify any standards to be applied to the measure. These standards may include specific District requirements or industry standards (e.g. NRCS conservation practice standards), as are required for the preapproved conservation measures.

Additionally, staff will prepare a cost estimate for implementation of the measure. The cost estimate may be prepared based on the cost estimate provided by the applicant, provided that the costs are independently verified by the District.

Following development of the cost estimate, staff will identify a proposed cost share percentage for approval by the Program Manager. In general, it is anticipated that the District's contribution

for physical improvements will be subject to a 50% maximum cost share and management practices will be subject to a 75% maximum cost share. These values may be adjusted based on consideration of benefits to the grower vs. the District of implementing the measure; in general, the District would be willing to pay a greater share for conservation measures with greater benefits to the District. Once a cost share percentage is established for a given grower proposed conservation measure, the value should be used for other grower proposals for the same or essentially the same measure in order to provide equal treatment to all applicants.

As described previously under Selection and Notification, if the application is approved based on technical merit, available funding will be verified. If funds are available, the application may be subject to the Final Review and Approval process by the Engineering Manager, the Water Operations Supervisor, and the Maintenance Supervisor.

Results of the evaluation will be provided to the applicant along with notification of whether the application is approved or denied. If approved, any applicable standards and determination of the cost share percentage and maximum cost share amount (calculated as the cost share percentage multiplied by the estimated cost) will be included in the notification.

District Valve Packing Service

District valve packing for flood irrigation valves installed on District pipelines will be provided as an on-demand service by the District. Growers will be responsible for scheduling valve packing with the District by contacting Julie Vrieling at (209) 249-4675 or email jvrieling@ssjid.com. Upon approval, the grower will be responsible for removing and reinstalling the valve. The District will be responsible for packing the valve. The grower will be responsible for paying the District for the cost of valve packing material, which the District is able to purchase in bulk, along with the cost of District labor to repack the valve.

Monitoring and Verification

Following approval and notification, staff will contact approved applicants to develop an estimate of when the conservation measure will be implemented and when documentation of implementation costs will be submitted for reimbursement. A sample Request for Reimbursement form is included as Appendix A of this document. The form will be provided to the participant with the notification of approval for each approved field application.

Field Visits

Based on the timing of conservation measure implementation, staff will coordinate with the participant to schedule field visits during and following construction to verify and document implementation of physical improvements according to Program standards. A sample form and

checklist for field visits has been included as Appendix C of this document. It is anticipated that this form will be refined by staff over time based on experience documenting conservation measure implementation through field visits to verify construction to applicable standards. At a minimum, the following information will be gathered during field visits:

- Photographs
- Measurements of critical dimensions and capacities
- Sketch of layout, including water sources and drainage outlets for the field
- List of key materials used in construction
- List of applicable performance criteria and confirmation that criteria are met based on conservation measure standards
- Documentation of any tests performed to verify proper operation

For management practices, field visits may be conducted to verify implementation as well. For example, field visits may be conducted to verify that soil moisture monitoring equipment is installed at the field or to meet with irrigation scheduling consultants to discuss observations and recommendations.

All field visits will be coordinated with the applicant and other involved parties in advance. A sample Field Visit Record is provided in Appendix C of this document.

Documentation of Conservation Measure Implementation Costs

Documentation of conservation measure implementation costs and proof of payment must be provided by the applicant along with the reimbursement form submitted to request a cost share payment. All documentation will be reviewed carefully by staff to verify the correct cost share amount to be paid to the grower. This documentation additionally provides verification that the conservation measure was implemented as proposed.

Operational Reports

Operational reports for conservation measures such as scientific irrigation scheduling and soil moisture monitoring will be provided by service providers directly to the District. For these conservation measures, the District will directly reimburse the supplier rather than the participating grower. A condition of reimbursement for supplier reimbursement by the District is that the service provider will supply the operational reports to the District in a timely manner. Program staff will periodically review agreements for scientific irrigation scheduling, soil moisture monitoring, or grower proposed conservation measures that include operational reports, and will remind suppliers for which operational reports have not been received of the need for the service provider to submit the reports.

Cost Share Payments

As described previously, requests for cost share payments will be processed following receipt of a Request for Reimbursement (Appendix A). Approved requests will be issued for each field. The Request must be accompanied by documentation of implementation costs, including invoices and receipts from equipment and service providers. Costs incurred by the grower internal to his or her operation that are associated with the installation of the conservation measure are not considered eligible for reimbursement. Staff will review documentation of all costs in detail to ensure that the quantities and costs are consistent with the conservation measure implemented and are reasonable based on typical costs as documented based on NRCS cost share lists, U.C. Cost and Return Studies (coststudies.ucdavis.edu), discussion with local suppliers, or other sources.

For each payment, Program staff will review the Request for Reimbursement and prepare a Recommendation for Reimbursement (Appendix B) for review and approval by the Program Manager. Then, the approved Recommendation for Reimbursement will be submitted to the Finance department to issue checks to the participant and service providers, as applicable.

The Finance department will provide a report summarizing payments issued on a monthly basis for the prior month to the Program Manager. The summary will list the fields for which reimbursements were issued, along with reimbursement amounts and dates checks were issued. Payment information will be entered into the PAT by Program staff.

Payment caps for individual conservation measures and for individual growers will apply as described in the Program Description. In general, growers will be limited to total SSJID cost share payments of $50,000. Payments for conversion to sprinkler or flood, for installation of tailwater recovery systems, or for grower proposed physical improvements will be limited to $25,000 per grower for each measure. Payments for scientific irrigation scheduling and soil moisture monitoring will be limited to $5000 per grower.

Program Tracking and Overall Management

Program tracking will be achieved primarily using the Program Administration Tool (PAT). Staff will review the status of applications on an ongoing basis as they move through the enrollment process and as conservation measures are implemented and cost share is issued for selected fields. Program tracking will be conducted on approximately the following time scales, and management actions will be taken as needed to ensure maximum participation in the Program while documenting conservation actions on individual fields and ensuring the Program is implemented within the available budget:

- Daily
    - Entry of new applications into the PAT

  - Update of enrollment status through initial review, eligibility checks, secondary review, final review, and notification for individual field applications
  - Update status of field visits, including most recent field visit date, total number of field visits to date, whether implementation to Program standards was verified, whether components included in cost documentation were verified as being present in the field
  - Update of implementation cost and approved cost share information through review of Requests for Reimbursement and preparation of Recommendations for Reimbursement based on documented and approved implementation costs
- Monthly
  - Review of total applications received and approved by conservation measure and by conservation measure category
  - Update of cost share payment information based on summary of payments issued provided by finance staff
  - Development of recommendations for reallocation of funding totals by conservation measure category based on review of applications received and remaining budget by category
  - Preparation of Program summary reports for review by General Manager and Board of Directors

Staffing Needs

A projection of the number of fields and acres participating in the program in 2012 based on available funding and assumptions related to cost share amounts per field, field size, and other factors is provided in Appendix D. These estimates are meant to provide a rough estimate of the number of applications that will be approved and the corresponding administrative requirements to aid in District projections of staffing required to implement the Program.

Data Management

Data entry, updating, and correction will be completed through the PAT. All data entry processes will be performed by Program staff. Hard copies of applications, documentation of the application review process, field visit reports, and implementation cost and reimbursement documentation will be kept on file at the District's office.

Program documents including the Program Description, Administration Guidelines, and all standard forms used for the Program will be digitally maintained by the Program Manager on the District computer system.

Appendix A: Request for Reimbursement Form

For District Use Only

Date Received: _____

REQUEST FOR REIMBURSEMENT
(SSJID On-Farm Water Conservation Program, 2012)

1. Applicant name _____
2. Mailing address _____
3. Telephone # _____ Email _____
4. Assessor's Parcel Number (APN) _____
5. SSJID Delivery Location (example: Lateral" Wc", Station 120) _____
6. Field size (acres) _____ 7. Crop _____
8. Tax ID# for recipient of reimbursement _____

Summary of Costs and Requested Reimbursement Amounts

Conservation Measure	Total Cost for Field[1]	Cost per Acre[2]	Cost Share Percent[3]	Maximum Cost Share[4]		Requested Reimbursement[5]	
				$ per Field	$ per Acre	$ per Field	$ per Acre
Delivery Measurement for Pumped Deliveries	$_____	$_____	80%	$4,500		$_____	
Conversion from Flood to Sprinkler Irrigation[6]	$_____	$_____	50%	$25,000	$825	$_____	$_____
Conversion from Flood to Drip Irrigation[6]	$_____	$_____	50%	$25,000	$825	$_____	$_____
Tailwater Recovery System to Prevent Runoff	$_____	$_____	50%	$25,000	$600	$_____	$_____
Other (please describe): _____ _____ _____	$_____	$_____	___%	$_____	$_____	$_____	$_____

1. Enter total cost for field as supported by attached documentation.
2. Enter total cost per acre, based on cropped acreage.
3. Cost share percent based on Program Limits. For other, grower proposed conservation measures, enter cost share % determined by SSJID as part of application review process.
4. Maximum cost share based on Program Limits. For other, grower proposed conservation measures, enter maximum cost share per field or per acre, determined by SSJID as part of application review process.
5. Enter the lesser of the Maximum Cost Share and either the Total Cost per Field multiplied by the Cost Share Percent or the Cost per Acre multiplied by the Cost Share Percent, as appropriate.
6. For fields with conversion from flood to sprinkler or drip/micro, costs for installation of a flow meter for delivery measurement should be listed separately under Delivery Measurement for Pumped Deliveries.

REQUEST FOR REIMBURSEMENT
(2012 CONSERVATION PROGRAM, CONTINUED)

For District Use Only
Date Received: _____

Attach detailed documentation of conservation measure implementation costs. Include the following:

- Invoices and receipts from equipment and service providers
- Itemized lists of work items, quantities, and costs for any costs incurred internal to the farming operation
- Other costs, as appropriate

SUBMIT COMPLETED FORM TO SSJID

(SEND TO: ON-FARM CONSERVATION PROGRAM MANAGER, SSJID, 11011 E. HWY 120, MANTECA)

1. Your completed request will be reviewed & processed according to Program policy. A determination and recommendation by the On-Farm Water Conservation Program Manager will be made as authorized by the Board of Directors.
2. Upon approval, the applicant will be notified by Program staff with the approved payment amount and time schedule for payment receipt.
3. There will be no cost for inspections by Program staff, but a final inspection and approval will be required before reimbursement is made. Contact Julie Vrieling at (209) 249-4675 to schedule a field visit.
4. By signing below, the applicant states that the conservation measure implementation costs documented herein are complete and accurate to the best of his/her knowledge.

APPLICANT SIGNATURE _____ DATE _____

Appendix B: Recommendation for Reimbursement Form

Date: _____

RECOMMENDATION FOR REIMBURSEMENT
(SSJID On-Farm Water Conservation Program, 2012)

1. Applicant name _____
2. Mailing address _____
3. Telephone # _____ Email _____
4. Assessor's Parcel Number (APN) _____
5. SSJID Delivery Location (example: Lateral "Wc", Station 120)_____
6. Field size (acres) _____ 6. Crop _____
7. Tax ID# for recipient of reimbursement _____

8. Conservation Measures Implemented:

   Physical Improvement(s): _____

   Grower Proposal: _____
9. Field Visit Date: _____ SSJID Representative: _____
10. Conservation Measure Implemented According to Applicable Standards? ___ Yes ___ No
11. Summary of Recommended Cost Share Reimbursements

Conservation Measure	Recommended Reimbursement	
	$ per Field	$ per Acre
Delivery Measurement for Pumped Deliveries	$_____	
Conversion from Flood to Sprinkler Irrigation	$_____	$_____
Conversion from Flood to Drip Irrigation	$_____	$_____
Tailwater Recovery System to Prevent Runoff	$_____	$_____
Other (please describe): _____ _____	$_____	$_____

TOTAL RECOMMENDED REIMBURSEMENT FOR FIELD $_____

Approved By Program Manager: _____ Date _____

Appendix C: Sample Field Visit Record

Date: _____

FIELD VISIT RECORD

1. Date _____ SSJID Representative: _____
2. Applicant _____
3. Assessor's Parcel Number (APN) _____
4. SSJID Delivery Location (example: Lateral "Wc", Station 120) _____
5. Conservation Measures Implemented:

   Physical Improvement(s): _____

   Management Practice(s): _____

   Grower Proposal: _____
6. Purpose of Field Visit: Verify Implementation to Standards _____ Other (explain): _____

_____

_____

7. Conservation Measure Implemented According to Applicable Standards? ___ Yes ___ No

List applicable standards, and deficiencies, as applicable: _____

_____

_____

_____

_____

_____

CHECKLIST

___ Sketch of Field Layout (include field boundary, delivery point, wells, irrigation system components, drainage outlets, etc.)

___ Photographs (include crop, delivery location, wells, irrigation system components, drainage outlets, etc.)

___ Specific materials listed in grower cost documentation. Verify presence of components, including pump mfr. and capacity, pipe materials and dimensions, filters, etc. (as applicable)

Appendix D: Participation Projections Based on Available Funding

The following table (Table D-1) provides a projection of the number of fields and acres participating in the program in 2012 based on available funding and assumptions related to cost share amounts per field, field size, and other factors. These estimates are meant to provide a rough estimate of the number of applications that will be approved and the corresponding administrative requirements to aid in District projections of staffing required to implement the Program. Note that in the totals at the bottom of the table, it is assumed that all fields converting to sprinkler or drip/micro irrigation will also participate in delivery measurement for pumped deliveries.

Table D-1. Project Participation Expressed as Number of Fields and Acres to Support Projections of Staffing Requirements.

Conservation Measure Category	Conservation Measure	Number of Fields	Approx-imate Acres	Unit Cost Share per field	Unit Cost Share per acre	Total Cost Share	Category Total	Max. per Grower for Measure
Physical Improvements	Delivery Measurement for Pumped Deliveries	42	800	$4,500		$ 190,000	$ 855,000	NA
	Conversion from Flood to Sprinkler Irrigation	21	424		$825	$ 350,000		$25,000
	Conversion from Flood to Drip Irrigation	8	152		$825	$ 125,000		$25,000
	Tailwater Recovery System to Prevent Runoff	16	320		$600	$ 190,000		$25,000
Management Practices	Scientific Irrigation Scheduling	21	420	$2,250		$ 47,500	$ 95,000	$5,000
	Soil Moisture Monitoring	42	840	$1,125		$ 47,500		$5,000
Grower Proposals	Grower Proposed Conservation Measures	19	380		$500	$ 190,000	$ 190,000	$25,000
	TOTALS	**142**	**2,760**			**$ 1,140,000**	**$ 1,140,000**	

ON-FARM WATER CONSERVATION PROGRAM
2012 PROGRAM DESCRIPTION

SOUTH SAN JOAQUIN IRRIGATION DISTRICT

Table of Contents

Background and Objectives 2
Enrollment Process 3
Solicitation and Application Process 3
Eligibility Requirements 3
Selection Process 5
Conservation Measures 5
Physical Improvements 6
Delivery Measurement for Pumped Deliveries 6
Conversion from Flood to Sprinkler or Drip/Micro Irrigation 7
Tailwater Recovery Systems to Prevent Runoff 9
Management Practices 9
Scientific Irrigation Scheduling 9
Soil Moisture Monitoring 10
District Services 11
Valve Packing 11
Grower Proposals 11
Overview 11
Proposal Requirements 12
Evaluation Criteria 12
Applicable Standards and Specifications 12
Determination of Estimated Costs and Cost Share Amounts 12
Maximum Cost Share Payment per Grower 13
Interaction with Other, Non-District Programs 13
Budget Tracking 13
Payment Approval and Processing 14
Monitoring and Verification 15
APPENDIX A: Application for Program Participation A-1

APPENDIX B: Applicable NRCS Conservation Practice Standards B-1

APPENDIX C: Consent to South San Joaquin Irrigation District's Entry of Property to Read and Owner's Agreement to Maintain Flow Meter C-1

Background and Objectives

In the early 1900's, the South San Joaquin Irrigation District's system was built for flood irrigation. Over the years, the practices of growers have changed as they work to conserve water and to improve crop yields with the installation of more efficient irrigation systems and implementation of advanced farming practices. In recognition of the farmers' efforts, and to comply with State law regarding agricultural water use, SSJID provides financial incentives to accelerate improvements to the existing distribution system, enhance farm irrigation practices and provide for measurement of water usage. The intent of this Program is to engage as many growers as possible.

SSJID has developed an on-farm water conservation program (Program) to promote and incentivize on-farm physical improvements, irrigation management practices and water measurement (together referred to as Conservation Measures) that promote water conservation. From a Program perspective, water conservation is defined as use of less water to accomplish the same purpose by encouraging the efficient use of District surface water to meet crop water requirements.

SSJID's goal is to ensure that water is being used efficiently and that it is being put to beneficial use. The District has implemented the on-farm water conservation program in order to work together to achieve the shared water management goals of the growers and the District. The Program also supports ongoing efforts to preserve existing water rights and to comply with current and emerging regulations.

This Program helps the District satisfy the new regulatory requirements of California Senate Bill SBx 7-7, which took effect January 1, 2010 and mandates measurement of individual farm deliveries and implementation of Efficient Water Management Practices (EWMPs) including both District and on-farm improvements. Additionally, it is anticipated that this Program will enhance the control of available surface water and groundwater supplies while promoting improved crop production within SSJID. This program, along with other initiatives the District is evaluating, will provide improved farm delivery measurement and support compliance with SBx 7-7.

A focused set of conservation measures have been included in the Program. In addition, a provision has been included for growers to propose other conservation measures they believe will result in improved water management on their fields, subject to District approval. In future years, additional conservation measures may be added based on experience with the Program.

Cost shares made available by the Program have been approved for the 2012growing season. This document provides a detailed description of the 2012 Program to be implemented in November 2011. Cost share offerings for implementation of conservation measures for 2013 will be the subject of future Board decision. For the 2012 Program, participants will be eligible for cost share payments for conservation measures implemented after the Program start date of Monday, November 7, 2011. Applications will be available and accepted on the start date.

Enrollment Process

Solicitation and Application Process

The program will be launched in November 2011 through a mailing to SSJID water users and an announcement on the SSJID web site.

Growers are invited to submit applications for one or more fields (Appendix A). For each field, the grower will select one or more conservation measures for implementation from a pre-approved list. Additionally, growers may propose additional conservation measures of their choosing. Fields will be selected by the District for implementation individually from each application provided that they are complete, pass minimum eligibility requirements, and provided that funding is available, as described in the following sections. Additionally, for some conservation measures (conversion from flood to sprinkler or drip/micro irrigation and grower proposed conservation measures not included on the preapproved list) the application will be reviewed to ensure compatibility with the SSJID distribution system and operations. The District reserves the right to restrict the amount of participation by a particular grower or a particular field.

As mentioned above, each application must be complete to be considered for inclusion in the Program. A complete application will have all applicable portions of the application filled in and, in the case of grower-proposed conservation measures, complete applications will include sufficient documentation to support evaluation of the conservation measure by the District. Required documentation for grower-proposed conservation measures is described later in this Program Description under Grower Proposals.

For additional information, contact Program Manager Julie Vrieling at (209) 249-4675 or email jvrieling@ssjid.com.

Eligibility Requirements

The following eligibility requirements apply to all fields applying to enter the Program.

- Minimum Field Size – The minimum field size for inclusion in the Program is 10 acres, based on the net irrigated acreage of the field. The 10-acre threshold is additionally the acreage above which the recharge fee applies to fields within the District.

  Growers with fields less than 10 acres in size may submit an application. The District will evaluate whether there is sufficient potential for water conservation to be achieved to warrant the administrative time required to include the field in the Program. Proposals to enroll fields less than 10 acres in size will be evaluated on a case by case basis.

- Current SSJID Water User – For a field to be eligible for the Program, it must be or become a current SSJID surface water user as a condition to approval of any funding. For physical improvements, the participant agrees to use SSJID surface water for a period of not less than 5 years.

- Water Charges Current – At the time of enrollment, all of the grower's SSJID water charges must be or become current.

- On-Farm Measurement – For fields entering the Program with pumped deliveries, the participant agrees to install a meter to measure farm deliveries, in accordance with the conservation measure Delivery Measurement for Pumped Deliveries, as described in this document, including any reconfiguration of the pump discharge needed to facilitate accurate measurement while maintaining the pump flow rate. The participant will agree to perform repairs, maintenance, or replacement of water measurement devices as needed to ensure accurate measurement into the future.

  The participant agrees to allow SSJID to periodically record flow rate and delivery amounts using the meter and, at the District's option, to perform repairs, maintenance, or replacement as needed to ensure accurate measurement into the future. Additionally, all participants agree to allow meters to be installed by the District on a case-by-case basis for flood deliveries, if the District determines that site conditions support accurate delivery measurement.

- Satisfactory Performance in Prior Programs – If applicable, applications may be denied due to less than satisfactory performance in prior District programs.

- Cost Share - The District's maximum share of cost will be a set percentage of the participant's implementation cost, up to the maximum approved cost share.

- Program Award/Modification – the District will review and select applications for participation in the Program based on its determination of which applications best meet

the Program objectives. The District may modify the terms for participation in the Program at any time, but will not reduce its commitment applicable to a particular field after a participant has received notice of approval from the District.

Selection Process

Fields will be considered on a first-come, first-served basis. An application will be considered approved when the District issues written notice of approval to the applicant at the address specified on the application. The terms of approval and the conditions for District payment will be stated in the notice. Fields will be considered for approval until available funds allocated to each conservation measure of the Program are fully committed for each year, based on the assumption that actual reimbursement costs for cost share payments, as described later in this document, will be the maximum allowable payment per field. If after actual payments are made remaining funds are available, additional fields will be considered in the order in which their applications were received.

In order to encourage adoption of a variety of conservation measures, a total budget will be allocated for each conservation measure, including grower-proposed measures and District-provided valve packing services, as described in the Budget Tracking section of this document.

Approved conservation measures must be completed within 1 calendar year of the date of approval to be considered eligible for cost share payments. Requests for reimbursement must be submitted to the District within the 1 year period. Conservation measures started prior to the approval date are not eligible for cost share payments.

Conservation Measures

Conservation measures as described herein are classified as either physical improvements or management practices. Physical improvements include conservation measures involving substantial physical changes to a field. Management practices include collection of information and development of recommendations to aid in improved irrigation management to meet crop water needs.

All measures must be constructed or implemented according to Program standards prior to receiving reimbursement. For physical improvements, all measures must have been inspected and approved by SSJID staff prior to reimbursement. For management practices, payment will be made following the receipt of operational reports (soil moisture monitoring data and/or irrigation scheduling recommendations) under the provision that service provider will provide these data for the full irrigation season for which the field is enrolled in the Program. For both physical improvements and management practices, documentation of costs must be provided to the District's satisfaction prior to reimbursement.

As described in the Background and Overview section of this Program Description, for the 2012 Program, participants will be eligible for cost share payments for conservation measures implemented after the Program start date of November 7, 2011.

Physical Improvements

Delivery Measurement for Pumped Deliveries

Delivery measurement for pumped deliveries consists of installing a flow meter to measure SSJID water deliveries for existing or new pumped SSJID deliveries. In some cases, the existing pump discharge piping may need to be reconfigured to provide an adequate straight section of pipe without bends or other obstructions to allow for accurate flow measurement using a flow meter.

This conservation measure is applicable to any case in which SSJID water is delivered to a pump that pressurizes irrigation water for application via a sprinkler, drip, or micro system. Minimum standards for the measure are:

- Seametrics AG2000 Irrigation Magmeter, McCrometer Ultra Mag flow meter, or approved equal
    - Installed with at least 3 diameters of straight pipe upstream of meter and 2 diameters of straight pipe downstream of meter (see Figure 1)
    - Provided with continuous power supply
    - Equipped with telemetry hardware allowing integration to the District's Supervisory Control and Data Acquisition (SCADA) System
    - Equipped with an internal datalogger[1]
- The participant agrees to perform repairs, maintenance, or replacement of water measurement devices as needed to ensure accurate measurement into the future.
- The participant agrees to allow the District to record delivery flow rates and volumes periodically for the life of the meter and to allow the District, at its option, to perform any repair, maintenance, or replacement, as needed to ensure accurate measurement into the future.
- The land owner must sign an SSJID agricultural Meter Service Agreement (Appendix C) as part of implementation of this conservation measure.
- The participant agrees to allow the District, at its option, to install telemetry, including but not limited to a solar panel, mast, antenna and other necessary equipment to remotely monitor delivery flows using the flow meter.

[1] For the McCrometer Ultra Mag flow meter, an external datalogger is required and is subject to approval by SSJID.

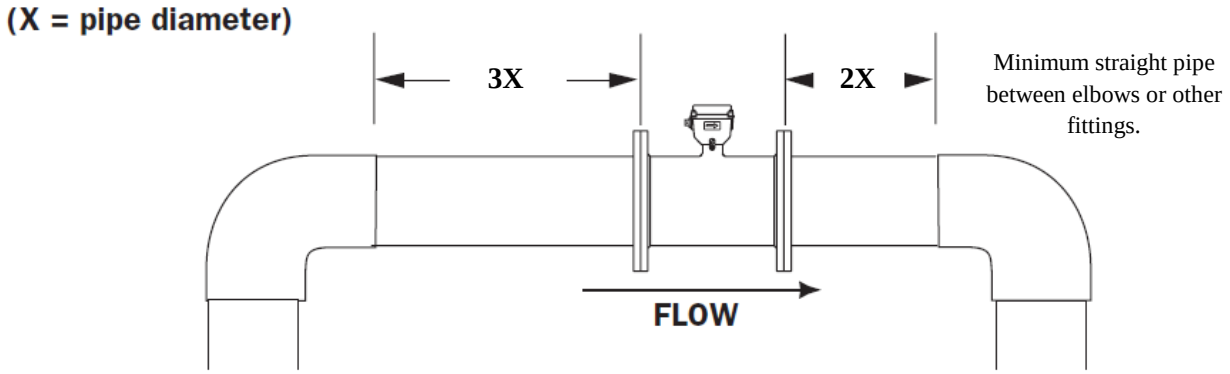

Figure 1. Example Magnetic Flow Meter Installation.

This measure will be included with any participating fields installing a sprinkler or drip irrigation system as described under the following conservation measure. All growers implementing this measure are required to agree to allow the District to read the flow meter periodically for purposes of delivery record keeping for the life of the device.

The estimated cost for planning purposes is $5,650 per location based on the estimated purchase and installation cost of a 12" mag meter, plus a contingency to allow for re-plumbing of pipe discharge to allow for adequate length of straight pipe to install the meter in some cases.

The District's cost share for delivery measurement of pumped deliveries will be 80% of the actual cost, not to exceed $4,500.

Conversion from Flood to Sprinkler or Drip/Micro Irrigation

Conversion from flood to sprinkler or drip irrigation consists of installing a sprinkler, drip, or microspray irrigation system on an existing field that is currently flood irrigated. The conservation measure includes installation of the pump, filtration, mainlines, laterals, and emitters for the system. Adoption of this conservation measure additionally requires installation of an SSJID approved sump to allow for pumping of canal water along with adoption of the conservation measure Delivery Measurement for Pumped Deliveries, described previously.

Conversion from flood to sprinkler or drip irrigation is generally applicable throughout SSJID, except where delivery system physical and operational constraints limit the District's ability to meet the delivery needs of sprinkler or drip/micro systems. Although the primary crops currently irrigated using sprinkler or drip irrigation are trees and vines, this conservation measure could also apply to the installation of a sprinkler system to irrigate pasture or field crops, for example. **Applications for conversion to sprinkler or drip/micro irrigation will be evaluated on a case by case basis to determine whether the District can continue to provide canal water to meet crop water needs following irrigation system conversion. Only fields located such that the District can supply surface water at the flow rate and irrigation intervals required after conversion will be approved.**

Minimum standards for this measure have been identified based on the NRCS Conservation Practice Standards listed in Table 1, below. These standards are included in Appendix B of this document.

Table 1. NRCS Conservation Practice Standards Applicable to Conversion from Flood to Sprinkler or Drip Irrigation.

NRCS Conservation Practice Standard	Applies to Conversion from Flood to:	
	Sprinkler	Drip or Micro
Irrigation System, Sprinkler (442)	✓	
Irrigation System, Microirrigation (441)		✓
Pumping Plant (533)	✓	✓
Underground Plastic Pipe (430DD and 430EE, as applicable)	✓	✓

Additionally, the following requirements developed by SSJID shall apply:

- No filters may back flush to District pipelines or open canals
- Each system must be designed by an Irrigation Association Certified Irrigation Designer
- Design Distribution Uniformity must be at least 75% for sprinkler systems and at least 90% for drip or micro systems
- Participants are responsible for submitting an Application for Structure Permit and constructing a District-approved sump prior to receiving reimbursement for system installation costs under this conservation measure.

The estimated cost for conversion from flood to sprinkler or drip/micro for planning purposes is $1,650 per cropped acre based on estimated materials and installation costs of a complete system including pump, filtration, mainlines, laterals, and emitters. The estimated costs are based on discussion with local irrigation suppliers and review of NRCS EQIP cost estimates. Reimbursement for sump costs will be made separately through the ongoing District sump program. Reimbursement for flow meter costs will be made separately under the Program based on the Delivery Measurement for Pumped Deliveries conservation measure, described previously.

The District's cost share for conversion from flood to sprinkler or drip irrigation will be 50% of the actual cost, not to exceed $825 per cropped acre. Additionally, the cost share payment will be limited to a maximum of $25,000 per grower for each measure. Conversion from flood to

drip and conversion from flood to sprinkler are considered different measures for purposes of determining the maximum cost share per grower for each measure. As described, this cost share does not include installation of a sump or delivery measurement for pumped deliveries, which will be treated separately.

In addition to conversion from flood to sprinkler or drip/micro irrigation, the District may consider conversion of sprinkler to drip/micro irrigation or replacement of old sprinkler or drip/micro systems.

Tailwater Recovery Systems to Prevent Runoff

Tailwater Recovery Systems to Prevent Runoff consist of systems to collect and convey tailwater to the head of the field from which the tailwater was generated or another nearby field for the purpose of recovering and reapplying the tailwater to supplement irrigation deliveries. For this Program, tailwater recovery systems are targeted at fields that periodically drain tailwater back into the SSJID distribution system where it currently is delivered to a downstream user or spills from the system. SSJID discourages and in the future may no longer allow drainage of tailwater into the distribution system. This conservation measure applies to any field for which tailwater is produced during irrigation that drains back to the SSJID irrigation system. It is anticipated that this only occurs for flood irrigated fields.

Minimum standards for this measure have been identified based on the NRCS Conservation Practice Standards for Irrigation System, Tailwater Recovery (447), Pumping Plant (533), and Underground Low Pressure Plastic Pipe (430EE), included in Appendix B of this document.

The estimated cost of tailwater recovery systems for planning purposes is $1,200 per cropped acre based on estimated materials and installation costs of a complete system including tailwater pond, tailwater return pipeline, and pump. The estimated costs are based on estimated quantities and unit costs for system components and based on review of NRCS EQIP cost estimates.

The District's cost share for tailwater recovery systems will be 50% of the actual cost, not to exceed $600 per cropped acre. Additionally, the cost share payment will be limited to a maximum of $25,000 per grower for this measure.

The District will also consider grower proposals to reduce drainage through laser land leveling and deep ripping, for example. Interested growers may submit a proposal as described under "Grower Proposals," included later in this document.

Management Practices

Scientific Irrigation Scheduling

Scientific Irrigation Scheduling consists of the determination of the frequency, rate, and duration of irrigation application needed to meet crop water requirements while minimizing excess

tailwater and deep percolation. Typically, this determination is based on a combination of soil moisture monitoring and root zone water balance calculations based on estimates of crop water use (evapotranspiration, or ET). Scientific irrigation scheduling is applicable to all irrigated crops, regardless of irrigation system type or soil conditions.

In most cases, the optimum frequency, rate, and/or duration of irrigation is constrained by available water supply, the delivery system, the soil, or the irrigation system itself. In the case of SSJID, the delivery frequency and flow rate are generally fixed under current system operation, providing flexibility almost exclusively in the duration of irrigation.

Under the Program, the District requires that scientific irrigation scheduling be conducted by approved service providers using proven technologies. Additionally, the District requires that irrigation recommendations be submitted to both the participating grower and to the District by the service provider. To request a list of preapproved service providers, contact Julie Vrieling at (209) 249-4675 or email jvrieling@ssjid.com.

The estimated cost of scientific irrigation scheduling for planning purposes is $3,000 per field per season, which represents the average seasonal cost for a consulting service to provide irrigation recommendations for an individual field based on discussion with consultants serving the San Joaquin Valley. The difference in cost between consultants depends largely on whether continuously recording soil moisture monitoring equipment is installed in the field; costs will likely be substantially less for weekly field visits using portable soil moisture monitoring equipment.

Unlike physical improvements, the District will pay a portion of the total cost of the scientific irrigation scheduling service directly to the service provider. The portion that the District is willing to pay will be a one-time payment of 75% of the actual cost, not to exceed $2,250 per field for 2012. The maximum payment for Scientific Irrigation Scheduling for 2012 will be limited to $5,000 per grower.

Soil Moisture Monitoring

Soil Moisture Monitoring consists of tracking the moisture content of the crop root zone over the course of the growing season to evaluate whether irrigation practices are sufficient to maintain adequate soil moisture content while limiting excess deep percolation. Soil moisture monitoring is a key component of scientific irrigation scheduling and is applicable to all irrigated crops, regardless of irrigation system type or soil conditions. For the Program soil moisture monitoring is offered as a stand-alone conservation measure to assist growers in tracking soil water content, or it may be implemented as part of scientific irrigation scheduling, described previously.

Under the Program, the District requires that soil moisture monitoring be conducted by approved service providers using proven technologies. Additionally, the District requires that duplicate soil moisture monitoring reports be submitted to both the participating grower and to the District

by the service provider. To request a list of preapproved service providers, contact Julie Vrieling at (209) 249-4675.

The estimated cost of soil moisture monitoring for planning purposes is $1,500 per field per season, which represents the average seasonal cost for an agronomic consulting service to provide soil moisture monitoring reports for an individual field. The estimated costs are based on discussion with agronomic consultants serving the San Joaquin Valley. The difference in cost between providers depends largely on whether continuously recording soil moisture monitoring equipment is installed in the field; costs will likely be substantially less for weekly field visits using portable soil moisture monitoring equipment.

Unlike physical improvements, the District will pay a portion of the total cost of the soil moisture monitoring service directly to the service provider. The portion of the cost incurred that the District is willing to pay will be 75% of the actual cost, not to exceed $1,125 per field for 2012. The maximum payment for Soil Moisture Monitoring for 2012 will be limited to $5,000 per grower.

District Services

Valve Packing

Valve packing is a service that was traditionally provided by the District to repack irrigation valves to reduce valve leakage. Valve packing is applicable wherever large flood irrigation valves installed on District pipelines are used. Growers are to make arrangements to have their valves packed by contacting Julie Vrieling at (209) 249-4675. District staff will repack the valves. Valves will be packed according to manufacturer specifications, if applicable.

Growers will be charged a fee for valve packing to cover District labor and materials costs for repacking the valves. Additionally, the grower is responsible for the removal and reinstallation of the valve, as well as delivery to and pickup from the District. The District may restrict the availability of this service depending on the availability of personnel.

Grower Proposals

Overview

As part of the Program, growers are given the opportunity to submit proposals for District cost share to implement conservation measures in addition to those described previously. These proposals will be evaluated on a case by case basis as described below. The allowance for individual grower proposals provides flexibility in the types of conservation measures included. These measures could include laser land leveling, deep ripping, installation of pipelines to replace open ditches, or other measures identified by the applicant as effective water conservation measures for his or her field.

Proposal Requirements

Grower proposals to implement conservation measures not listed previously must include the following information:

- Description of conservation measure to be implemented, including a description of all physical changes to the field and corresponding irrigation management changes
- Itemized cost list giving estimated costs of major system components, with supporting documentation if available
- Sketch of field showing field location and physical changes to field, if applicable
- Description of how the proposed conservation measure will result in water conservation

Evaluation Criteria

Proposals for additional conservation measures will be evaluated by SSJID staff based on the following considerations:

- Completeness of proposal – the proposal must include the requested information at a sufficient level of detail to allow for evaluation by the District.
- Demonstrated effectiveness – the proposed conservation measure must be based on a demonstrated method of reducing deep percolation, tailwater, or other losses (i.e., seepage from farm ditches or evaporation). The proposed measure must be demonstrated conclusively in the SSJID area or other areas with sufficiently similar conditions, and it must be suitably applied. The District may consider new innovations, provided that they are accompanied by a clear description of how the measure will result in water conservation.
- No special administrative requirements – the proposed measure must not cause a burden to SSJID with respect to the continued delivery of irrigation water or to the administration of the Program. The measure must be observable to ensure that implementation of the measure can be documented for verification purposes.

Applicable Standards and Specifications

Proposed measures must be implemented to existing industry standards (e.g., NRCS conservation practice standards), to the extent that established standards exist. In all cases, SSJID may place requirements on measure implementation to ensure that the measure has the potential to be effective and does not provide an undue burden on SSJID water delivery practices or Program administration. Standards will be identified on a case by case basis but will be applied uniformly to all fields proposing to implement a given conservation measure.

Determination of Estimated Costs and Cost Share Amounts

Estimated conservation measure costs will be developed by reviewing grower estimates of costs along with other available sources including NRCS cost share lists and information from

irrigation equipment providers or other appropriate sources. Cost share percentages will be determined by SSJID staff on a case by case basis but will be applied uniformly to all fields proposing to implement a given conservation measure. Cost share percentages will be set in part based on relative benefits to the grower and to the District of implementing the measure. In general, it is anticipated that physical improvements will be funded at up to 50% of implementation cost, and management practices will be funded at up to 75% of implementation cost, but the particular cost share will be determined on a case by case basis. In all cases, cost share amounts will be limited based on the estimated implementation cost, which will be determined by staff before the proposal is approved. Additionally, the cost share payment will be limited to a maximum of $25,000 per grower for this measure.

Maximum Cost Share Payment per Grower

In addition to the payment limitations described previously for each conservation measure, the total cost share for 2011 for all fields enrolled by a grower will be limited to $50,000.

Interaction with Other, Non-District Programs

Other Programs may provide cost share payments for implementing conservation measures included in this Program. For example, programs offered by the Natural Resources Conservation Service of the USDA, such as the Environmental Quality Incentives Program (EQIP), offer cost share of 50% (or more in some cases) to cover the cost of installing sprinkler systems, drip/micro systems, tailwater recovery systems, or other on-farm improvements.

Participation in the SSJID On-Farm Water Conservation Program does not prevent growers from participating in EQIP or other Federal programs. Similarly, participation in EQIP or other Federal programs does not prevent participation in the SSJID On-Farm Water Conservation Program.

Budget Tracking

The total budget for cost share payments is $1.14 million for 2012. Initially, cost share amounts will be allocated for each conservation measure as described in Table 2.

Table 2. Initial 2012 Budget Amounts by Conservation Measure Category.

Conservation Measure Category	2012 Budget by Conservation Measure
Physical Improvements	
Delivery Measurement for Pumped Deliveries	$ 190,000
Conversion from Flood to Sprinkler or Drip/Micro	$ 475,000
Tailwater Recovery Systems to Reduce Runoff	$ 190,000
Management Practices	
Scientific Irrigation Scheduling	$ 47,500
Soil Moisture Monitoring	$ 47,500
Grower Proposals	$ 190,000
TOTAL	$ 1,140,000

The budget amounts will be reviewed periodically and may be adjusted based on the number of applications received for each conservation measure at the discretion of the Program Manager.

As applications for participation are received, they will be added to a list in the order they are received. At any given time, the applications subject to review and approval will be limited to those for which the total potential cost share is less than the total available budget by conservation measure category. If upon review, the District does not approve an application, the associated cost share will be released to fund applications received later within that category. As documentation of actual costs is received by the District from participating growers, the difference between the cost share limit and the actual cost share amount paid for each category, if any, will likewise be released to fund applications received later in the order in which they were received.

Payment Approval and Processing

Upon receipt of a request for payment and documentation showing actual payment of the incurred conservation measure implementation costs from an approved applicant, the District will verify that the measure has been implemented (as described in the following section) and payment will be issued based on the Program cost share percentage for the measure or measures implemented and based on the actual cost, not to exceed the cost share limit for the measure or measures.

Requests for reimbursement must be accompanied by documentation of implementation costs, including invoices and receipts from equipment and service providers, along with proof of payment. Costs incurred by the grower internal to his or her operation that are associated with the installation of the conservation measure are not considered eligible for reimbursement.

Payments will be issued as a separate check to the participating grower, rather than as a reduction in water charges. It is anticipated that payment will be made within 30 days of the District's verification that the measure was implemented.

Monitoring and Verification

Monitoring and verification of implementation of conservation measures will be accomplished through a combination of documentation of implementation costs (receipts and payments) and operational reports (flow measurement records, soil moisture monitoring reports, and irrigation recommendations), along with field visits to verify that physical improvements are implemented according to Program standards. Additionally, the District will seek feedback from participating growers in the form of interviews or questionnaires with the objective of evaluating the Program and documenting changes to irrigation practices resulting from conservation measure implementation.

APPENDIX A: Application for Program Participation

For District Use Only

Date Received: _____

APPLICATION FOR ON-FARM WATER CONSERVATION PROGRAM

1. Applicant/Landowner name _____ email _____
2. Mailing address _____
3. Telephone # _____

Complete one application for each field to be included in the Program. All measures must be implemented after the application approval date and completed within 1 year to be eligible for reimbursement.

SUBMIT COMPLETED APPLICATION TO SSJID

1. A detailed design plan and cost estimate must be submitted with applications including physical improvements to a field.
2. Your application will be reviewed and processed according to District policy and as described in the Program Description. A determination will be made as to the eligibility and potential effectiveness of the proposed conservation measure or measures for each field, and a recommendation will be made to the General Manager, Jeff Shields.
3. Following review, you will be sent a letter summarizing the conservation measures approved for implementation for each field application and if applicable, provide explanation of why any fields or conservation measures were not approved.
4. **COST SHARE PAYMENTS ARE NOT GUARANTEED UNTIL YOUR APPLICATION HAS BEEN APPROVED.**
5. If you have any questions concerning your application please feel free to contact Julie Vrieling at (209) 249-4675.
6. By signing below, you agree to implement the conservation measures described in this application and to abide by all Program requirements as described in the Program Description.

APPLICANT/LANDOWNER SIGNATURE _____

DATE _____

APPLICATION FOR ON-FARM WATER CONSERVATION PROGRAM (CONTINUED)

BASIC INFORMATION

1. Applicant/Landowner name _____
2. Assessor's Parcel Number (APN) _____
3. SSJID Delivery Location (example: Lateral "Wc", Station 120) _____
4. Field size[1] (acres) _____ 6. Crop _____

PROPOSED PHYSICAL IMPROVEMENTS
(Select up to one of the following by entering an "**X**" to the right of the description)

1. Delivery Measurement for Pumped Deliveries _____
2. Conversion from Flood to Sprinkler Irrigation[2] _____
3. Conversion from Flood to Drip/Micro Irrigation[2] _____
4. Tailwater Recovery System to Prevent Runoff _____

PROPOSED MANAGEMENT IMPROVEMENTS
(Select up to one of the following)

1. Scientific Irrigation Scheduling _____
2. Soil Moisture Monitoring _____

OTHER CONSERVATION MEASURES[3] _____

For other conservation measures, attach one or more sheets including the following information as described in the Program Description:

- Description of conservation measure to be implemented, including description of physical changes to the field and irrigation management changes
- Sketch of field showing field location and physical changes to field, if applicable
- Description of how the proposed conservation measure will result in water conservation

Have you applied for funding for these conservation measures under any other programs, such as NRCS EQIP?
Yes ___ No ___

APPLICANT/LANDOWNER SIGNATURE _____ **DATE** _____

---

[1] Fields less than 10 acres in size will be considered for participation on a case-by-case basis based on the potential to achieve water conservation as described in the Program Description.

[2] Conversion from flood to sprinkler or drip/micro must include the delivery measurement for pumped deliveries conservation measure.

[3] Other conservation measures will be considered as described in the Program Description.

APPENDIX B: Applicable NRCS Conservation Practice Standards

The following NRCS Conservation Practice Standards are attached:

1. Irrigation System, Sprinkler (442)
2. Irrigation System, Microirrigation (441)
3. Pumping Plant (533)
4. Irrigation Pipeline (430)
5. Irrigation System, Tailwater Recovery (447)

APPENDIX C: Consent to South San Joaquin Irrigation District's Entry of Property to Read and Owner's Agreement to Maintain Flow Meter

AFTER RECORDING RETURN TO:

SOUTH SAN JOAQUIN IRRIGATION DISTRICT
P.O. Box 747
Ripon, CA 95366

CONSENT TO
SOUTH SAN JOAQUIN IRRIGATION DISTRICT'S
ENTRY OF PROPERTY TO READ
AND OWNER'S AGREEMENT TO MAINTAIN FLOW METER

The undersigned owner of the property located at _____, APN _____ ("Property") and further described in the attached Exhibit "A", has, with the financial assistance of South San Joaquin Irrigation District ("District"), installed a flow meter to measure deliveries of District surface water to the Property. State law requires that starting in July 2012, the District base its water charges, at least in part, on the quantity of water it delivers. The District will use flow meter measurements in future water charges after its Board of Directors approves a policy that requires water charges be based at least in part on the measurement of quantity delivered.

Owner consents to the entry of District officers, employees or agents ("District Personnel") on the Property for the purposes of inspecting and reading the flow meter installed to measure deliveries of District surface water to the Property. District Personnel may enter the Property at any reasonable hour and on a monthly basis or at such other time as District reasonably determines to be necessary, to inspect the working condition of the meter and to record water usage. District shall also be permitted to enter the Property for the purpose of installing telemetry control hardware to the meter such that the meter can be read remotely. District Personnel may enter the Property outside any District easement area using marked District vehicles on available access roads, on foot or as Owner and District may otherwise agree. District shall use reasonable care to avoid interfering with Owner's farming operations.

Owner agrees to take no action that would prevent the meter from accurately measuring the volume of District surface water delivered to Owner's Property. If District determines that the meter is nonfunctioning, Owner agrees to repair or replace the meter at Owner's expense.

This Consent shall remain in effect until such time as deliveries of District surface water to the Property shall terminate as evidenced by recordation of an Irrigation Service Abandonment Agreement signed by District and Owner or Owner's success or in interest.

This Consent shall run with the land described above and be binding on Owner and Owners' heirs, successor and assigns.

SOUTH SAN JOAQUIN IRRIGATION DISTRICT

"DISTRICT"

By_____ Date:_____ By_____ Date:_____

John Holbrook, President Jeff Shields, Secretary

Board of Directors Board of Directors

"OWNER(S)"

By_____ Date:_____ By_____ Date:_____

Mailing Address: _____

_____

Phone Number:_____

SIGNATURES MUST BE NOTARIZED AND BE PER RECORDED DEED

ON-FARM WATER CONSERVATION PROGRAM
2013 ADMINISTRATIVE GUIDELINES

SOUTH SAN JOAQUIN IRRIGATION DISTRICT

November 2012

Table of Contents

Overview and Purpose 1
Program Administration Tool 1
Finance 2
Enrollment 2
Advertisement 2
Selection and Notification 2
Review and Evaluation of Grower Proposals for New Conservation Measures Based on Technical Merit 8
District Valve Packing Service 9
Monitoring and Verification 9
Field Visits 9
Documentation of Conservation Measure Implementation Costs 10
Operational Reports 10
Cost Share Payments 11
Program Tracking and Overall Management 11
Staffing Needs 12
Data Management 12
Appendix A: Request for Reimbursement Form A-1
Appendix B: Recommendation for Reimbursement Form B-1
Appendix C: Sample Field Visit Record C-1
Appendix D: Participation Projections Based on Available Funding D-1

Overview and Purpose

On October 27, 2009, the Board approved funding for an incentive-based on-farm conservation program ("Program") to promote water conservation within SSJID. On October 9, 2012, the Board approved funding for the 2013 Program in the amount of $1.14 million for cost share payments to growers to incentivize implementation of conservation measures. It is anticipated that the Program will be funded at a similar level in 2014. The Board may decide to fund the Program in later years at its discretion. It is anticipated that some aspects of the Program, including grower outreach and District-provided valve packing services will be provided on an ongoing basis.

The program will be administered by Julie Vrieling, On-Farm Water Conservation Program Manager, who will report to Sam Bologna, Engineering Department Manager and Jeff Shields, General Manager.

On October 9, 2012, the Board approved the 2013 Program structure as described in the 2013 Program Description. The 2013 Program Description describes the enrollment process, conservation measures included in the Program, budget tracking, payment approval and processing, and monitoring and verification. Additionally, the Program Description includes an application for enrollment and applicable NRCS conservation practice standards for on-farm improvements. The 2013 Program Description serves as a document describing how the Program works to SSJID growers and to the broader community.

The purpose of this document is to provide guidelines to District staff for management and administration of the 2013 SSJID On-Farm Water Conservation Program to be implemented November 5, 2012. It is anticipated that these guidelines will evolve over time along with the Program Description based on experience implementing the Program and based on changes to District facilities and operations as well as changes to farming practices within the District.

Program Administration Tool

The Program Administration Tool (PAT) consists of a spreadsheet tool with a record for each application and field that contains details of the application and conservation measures implemented, eligibility and selection results, and records of costs, payments, monitoring, and verification. The PAT provides a centralized location for records describing the Program while additionally supporting administration of the Program by allowing past and future payments to be tracked to guide the selection process, preventing approval of applications that could result in cost share payments exceeding the available budget.

Finance

Periodic reporting to District finance staff will be performed by the Program Manager in addition to submittal of payment requests for cost share payments to participants. Periodic reports will include projections of the timing and amounts of future cost share payments to support cash flow management. These reports will be generated on a monthly basis using the information stored in the PAT. Requests for cost share payments will be submitted to the finance staff as they are completed.

Enrollment

This section describes the process for enrollment, with an emphasis on staff activities needed to advertise the Program, select applications for cost share payments, and notify participants of the status of their applications. The enrollment process has been designed to provide flexibility to applicants in selecting fields and conservation measures while controlling SSJID administrative requirements and facilitating overall program management and planning. The aim of providing flexibility is to encourage widespread participation covering the range of crops, locations, and existing water management practices in the District.

Advertisement

As described in the 2013 Program Description, the 2013 Program will be launched in November 2012 through an announcement on the SSJID web site and through the SSJID Newsletter mailed to the District's customers.

The announcement will invite growers to apply for the Program by obtaining the Program Description and Application, either by picking up a copy at the District office in Manteca, by requesting a copy by mail, or by downloading the documents from the District web site. All requests will be handled in a timely manner to ensure equal opportunity for growers to apply for the Program.

Selection and Notification

Upon receipt, Program staff will record the date of receipt on the application and in the PAT. Applications will be reviewed by the Program Manager or Program staff assigned by the Program Manager and either approved or declined according to the following process:

1. Initial Review

   Review application for completeness and accuracy. A complete application will have all applicable portions of the application filled in and, in the case of grower-proposed conservation measures; complete applications will include sufficient documentation to support evaluation of the conservation measure by the District. Flag any missing or

incomplete information, and either contact the applicant for clarification, or return the application with an explanation of the reason the application is being returned.

2. Eligibility Check

Verify the eligibility of the application as follows:

a. Minimum Field Size – The minimum field size for inclusion in the Program is 10 acres, based on the net irrigated acreage of the field.
b. Applications for Fields Less than Minimum Size
    i. If an application is received for which a single conservation measure will serve multiple fields (for example a tailwater recovery system), the total acreage of the fields should be at least 10 acres.
    ii. If the field size (or total size of all fields with a single measure) is less than 10 acres, evaluate whether there is sufficient potential for water conservation to be achieved to warrant the administrative time required to include the Field in the Program. Consider the following:
        1. What is the potential quantity of water to be conserved?
        2. For each conservation measure, what is the potential cost share per acre? Is this cost substantially greater than for larger fields implementing the same conservation measure?
        3. What is the potential cost to the District per acre-foot of water conserved? How does it compare to current market values of water for transfer?
        4. Is the field devoted to productive agriculture?
    iii. Document all determinations of eligibility for fields less than 10 acres in size and obtain approval of Program Manager.
c. Current SSJID Water User – For all fields, verify that the applicant is a current SSJID water user. Notify any applicants that are not current users that all fields submitted for funding must use or become approved to use SSJID surface water before any cost share will be approved. For physical improvements, growers agree to use SSJID surface water for not less than 5 years.
d. Water Charges Current – Verify that water charges for all fields farmed by the applicant are current.
e. On-Farm Measurement – By signing the application, growers agree to implement on-farm delivery measurement in cases where the delivery is pressurized via an on-farm pump in accordance with the conservation measure "Delivery Measurement for Pumped Deliveries." Additionally, growers agree to allow the District to implement measurement in other cases, if practical. As a result, participating fields can be included in pilot delivery measurement programs

implemented by the District to evaluate alternatives for on-farm delivery measurement, particularly for flood irrigated fields.

f. Satisfactory Performance in Prior Programs – If applicable, evaluate whether the applicant has performed satisfactorily in other Programs, such as the sump program. Document evidence and obtain approval of Program Manager for any denials of eligibility.

3. Secondary Review and Approval
    a. For eligible applications selecting one or more preapproved conservation measures, review the available Program budget based on prior cost share payments and projected payments for fields already selected but for which payments have not yet been issued. Using PAT, verify that the total of prior and projected payments is less than the available budget for each proposed conservation measure. If available budget remains, select the field for inclusion, subject to additional review.
    b. For applications with grower proposals to implement conservation measures not included in the preapproved list, evaluate the grower proposal as described later in this section. If approved based on technical merit, review the available Program budget based on prior cost share payments and projected payments for fields already selected but for which payments have not been issued. Using PAT, verify that the total of prior and projected payments for grower proposed conservation measures is less than the available budget. If available budget remains, select the field for inclusion, subject to additional review to ensure that implementation of the conservation measure would not place undue burden on the administration of the Program, the SSJID distribution system, or system operations.
4. Final Review and Approval
    a. For field applications for conversion from flood irrigation to sprinkler or drip/micro irrigation that have passed the initial approval process, submit the field application along with a map and other supporting information to (1) the Engineering Department Manager, (2) the Water Operations Supervisor, and (3) the Maintenance Supervisor.
        i. The Engineering Manager will review the application to determine whether the field can be served by SSJID within the physical constraints of the existing distribution system and make a determination whether to approve the application from an engineering perspective.
        ii. The Water Operations Supervisor will review the application to determine whether the field can be served by SSJID within the operational constraints of the existing distribution system and make a determination whether to approve the application from an operations perspective.

iii. The Maintenance Supervisor will review the application to determine whether the field can be served by SSJID without causing undue increases to maintenance requirements.

iv. Denial of the application by any reviewer will be documented in writing providing the reasons that the field cannot be reasonably served following conversion to sprinkler or drip/micro irrigation.

b. For field applications for grower proposed conservation measures that have passed the initial approval process, the field application will be submitted along with a map or other supporting information as needed to (1) the Engineering Department Manager, (2) the Water Operations Supervisor, and (3) the Maintenance Supervisor as described above for field applications for conversion from flood irrigation to sprinkler or drip/micro irrigation. The review process for grower proposed conservation measures may be skipped, at the discretion of the Program Manager, if the proposed measure will clearly not impact the distribution system, operations, or maintenance.

c. Review of all applications will be completed within 30 days of receipt.

d. The results of the review process will be summarized and provided by mail to the applicant.

5. Notification

a. For each application, the applicant will be notified following the Final Review and Approval process by mail. Notifications will consist of the following:

i. For approved fields, a copy of the field application will be provided, along with a description of any additional information or implementation requirements identified by the District as part of the review process. Additionally, a Request for Reimbursement form (Appendix A) will be provided to the applicant (hereafter referred to as participant). The following conditions of approval will be listed in the notification of approval:

1. The approval applies only to the approved conservation measures, which will be listed in the notification.
2. All approved conservation measures must be implemented following the date of approval and within 1 year of the date of approval to be eligible for cost share payments.
3. Implementation must be to applicable standards for each approved conservation measure, as described in the Program Description.
4. The participating grower is to pay all costs of the project, with the exception of the District cost share for Scientific Irrigation Scheduling or Soil Moisture Monitoring, in which case the District will pay the supplier directly.

ii. For fields not selected, a copy of the application will be provided to the applicant, along with a description of why the field was not selected and supporting documentation.

The selection and notification process is summarized as a process diagram in Figure 1, below.

Figure 1. Process Diagram for Selection and Notification Process.

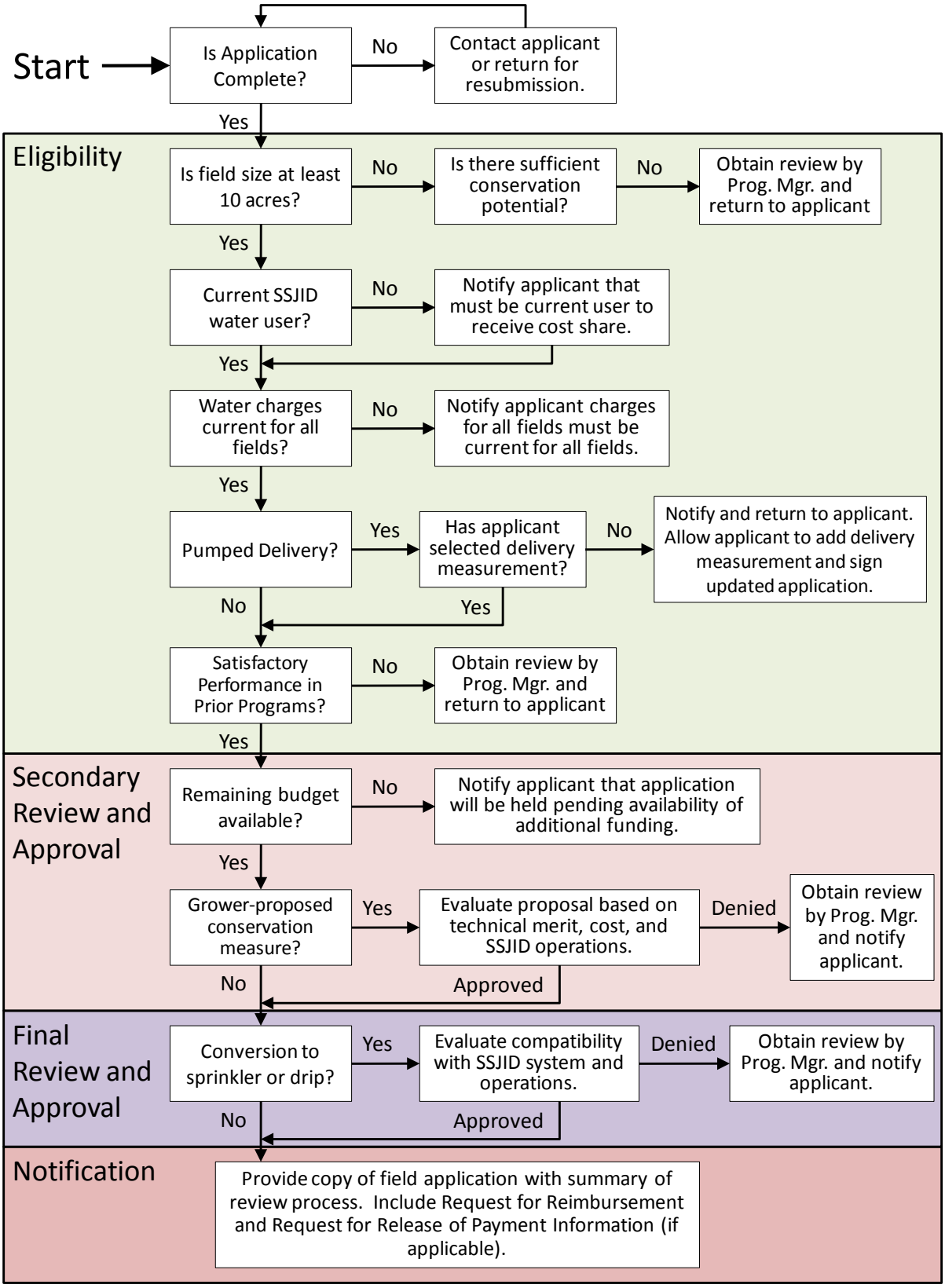

Review and Evaluation of Grower Proposals for New Conservation Measures Based on Technical Merit

Applicants have the option of proposing conservation measures not included in the preapproved conservation measure list for individual fields. For each field, applicants are required to submit the following information:

- Description of conservation measure to be implemented, including a description of all physical changes to the field and corresponding irrigation management changes
- Itemized cost list giving costs of major system components
- Sketch of field showing field location and physical changes to field, if applicable
- Description of how the proposed conservation measure will result in water conservation

Proposals for additional conservation measures will be evaluated by SSJID staff based on the following considerations:

- Completeness of proposal – the proposal must include the requested information at a sufficient level of detail to allow for evaluation by the District.
- Demonstrated effectiveness – the proposed conservation measure must be based on a demonstrated method of reducing deep percolation, tailwater, or other losses (i.e., seepage from farm ditches or evaporation). The proposed measure must be demonstrated conclusively in the SSJID area or other areas with sufficiently similar conditions, and it must be suitably applied. The District may consider new innovations, provided that they are accompanied by a clear description of how the measure will result in water conservation.
- No special administrative requirements – the proposed measure must not cause a burden to SSJID with respect to the continued delivery of irrigation water or to the administration of the Program. The measure must be observable to ensure that implementation of the measure can be documented for verification purposes.

For each application, staff will prepare a brief memorandum documenting findings related to the above considerations. Additionally, staff will identify any standards to be applied to the measure. These standards may include specific District requirements or industry standards (e.g. NRCS conservation practice standards), as are required for the preapproved conservation measures.

Additionally, staff will prepare a cost estimate for implementation of the measure. The cost estimate may be prepared based on the cost estimate provided by the applicant, provided that the costs are independently verified by the District.

Following development of the cost estimate, staff will identify a proposed cost share percentage for approval by the Program Manager. In general, it is anticipated that the District's contribution

for physical improvements will be subject to a 50% maximum cost share and management practices will be subject to a 75% maximum cost share. These values may be adjusted based on consideration of benefits to the grower vs. the District of implementing the measure; in general, the District would be willing to pay a greater share for conservation measures with greater benefits to the District. Once a cost share percentage is established for a given grower proposed conservation measure, the value should be used for other grower proposals for the same or essentially the same measure in order to provide equal treatment to all applicants.

As described previously under Selection and Notification, if the application is approved based on technical merit, available funding will be verified. If funds are available, the application may be subject to the Final Review and Approval process by the Engineering Manager, the Water Operations Supervisor, and the Maintenance Supervisor.

Results of the evaluation will be provided to the applicant along with notification of whether the application is approved or denied. If approved, any applicable standards and determination of the cost share percentage and maximum cost share amount (calculated as the cost share percentage multiplied by the estimated cost) will be included in the notification.

District Valve Packing Service

District valve packing for flood irrigation valves installed on District pipelines will be provided as an on-demand service by the District. Growers will be responsible for scheduling valve packing with the District by contacting Julie Vrieling at (209) 249-4675 or email jvrieling@ssjid.com. Upon approval, the grower will be responsible for removing and reinstalling the valve. The District will be responsible for packing the valve. The grower will be responsible for paying the District for the cost of valve packing material, which the District is able to purchase in bulk, along with the cost of District labor to repack the valve.

Monitoring and Verification

Following approval and notification, staff will contact approved applicants to develop an estimate of when the conservation measure will be implemented and when documentation of implementation costs will be submitted for reimbursement. A sample Request for Reimbursement form is included as Appendix A of this document. The form will be provided to the participant with the notification of approval for each approved field application.

Field Visits

Based on the timing of conservation measure implementation, staff will coordinate with the participant to schedule field visits during and following construction to verify and document implementation of physical improvements according to Program standards. A sample form and

checklist for field visits has been included as Appendix C of this document. It is anticipated that this form will be refined by staff over time based on experience documenting conservation measure implementation through field visits to verify construction to applicable standards. At a minimum, the following information will be gathered during field visits:

- Photographs
- Measurements of critical dimensions and capacities
- Sketch of layout, including water sources and drainage outlets for the field
- List of key materials used in construction
- List of applicable performance criteria and confirmation that criteria are met based on conservation measure standards
- Documentation of any tests performed to verify proper operation

For management practices, field visits may be conducted to verify implementation as well. For example, field visits may be conducted to verify that soil moisture monitoring equipment is installed at the field or to meet with irrigation scheduling consultants to discuss observations and recommendations.

All field visits will be coordinated with the applicant and other involved parties in advance. A sample Field Visit Record is provided in Appendix C of this document.

Documentation of Conservation Measure Implementation Costs

Documentation of conservation measure implementation costs and proof of payment must be provided by the applicant along with the reimbursement form submitted to request a cost share payment. All documentation will be reviewed carefully by staff to verify the correct cost share amount to be paid to the grower. This documentation additionally provides verification that the conservation measure was implemented as proposed.

Operational Reports

Operational reports for conservation measures such as scientific irrigation scheduling and soil moisture monitoring will be provided by service providers directly to the District. For these conservation measures, the District will directly reimburse the supplier rather than the participating grower. A condition of reimbursement for supplier reimbursement by the District is that the service provider will supply the operational reports to the District in a timely manner. Program staff will periodically review agreements for scientific irrigation scheduling, soil moisture monitoring, or grower proposed conservation measures that include operational reports, and will remind suppliers for which operational reports have not been received of the need for the service provider to submit the reports.

Cost Share Payments

As described previously, requests for cost share payments will be processed following receipt of a Request for Reimbursement (Appendix A). Approved requests will be issued for each field. The Request must be accompanied by documentation of implementation costs, including invoices and receipts from equipment and service providers. Costs incurred by the grower internal to his or her operation that are associated with the installation of the conservation measure are not considered eligible for reimbursement. Staff will review documentation of all costs in detail to ensure that the quantities and costs are consistent with the conservation measure implemented and are reasonable based on typical costs as documented based on NRCS cost share lists, U.C. Cost and Return Studies (coststudies.ucdavis.edu), discussion with local suppliers, or other sources.

For each payment, Program staff will review the Request for Reimbursement and prepare a Recommendation for Reimbursement (Appendix B) for review and approval by the Program Manager. Then, the approved Recommendation for Reimbursement will be submitted to the Finance department to issue checks to the participant and service providers, as applicable.

The Finance department will provide a report summarizing payments issued on a monthly basis for the prior month to the Program Manager. The summary will list the fields for which reimbursements were issued, along with reimbursement amounts and dates checks were issued. Payment information will be entered into the PAT by Program staff.

Payment caps for individual conservation measures and for individual growers will apply as described in the Program Description. In general, growers will be limited to total SSJID cost share payments of $50,000. Payments for conversion to sprinkler or flood, for installation of tailwater recovery systems, or for grower proposed physical improvements will be limited to $25,000 per grower for each measure. Payments for scientific irrigation scheduling and soil moisture monitoring will be limited to $5000 per grower.

Program Tracking and Overall Management

Program tracking will be achieved primarily using the Program Administration Tool (PAT). Staff will review the status of applications on an ongoing basis as they move through the enrollment process and as conservation measures are implemented and cost share is issued for selected fields. Program tracking will be conducted on approximately the following time scales, and management actions will be taken as needed to ensure maximum participation in the Program while documenting conservation actions on individual fields and ensuring the Program is implemented within the available budget:

- Daily
    - Entry of new applications into the PAT

  - Update of enrollment status through initial review, eligibility checks, secondary review, final review, and notification for individual field applications
  - Update status of field visits, including most recent field visit date, total number of field visits to date, whether implementation to Program standards was verified, whether components included in cost documentation were verified as being present in the field
  - Update of implementation cost and approved cost share information through review of Requests for Reimbursement and preparation of Recommendations for Reimbursement based on documented and approved implementation costs
- Monthly
  - Review of total applications received and approved by conservation measure and by conservation measure category
  - Update of cost share payment information based on summary of payments issued provided by finance staff
  - Development of recommendations for reallocation of funding totals by conservation measure category based on review of applications received and remaining budget by category
  - Preparation of Program summary reports for review by General Manager and Board of Directors

Staffing Needs

A projection of the number of fields and acres participating in the program in 2013 based on available funding and assumptions related to cost share amounts per field, field size, and other factors is provided in Appendix D. These estimates are meant to provide a rough estimate of the number of applications that will be approved and the corresponding administrative requirements to aid in District projections of staffing required to implement the Program.

Data Management

Data entry, updating, and correction will be completed through the PAT. All data entry processes will be performed by Program staff. Hard copies of applications, documentation of the application review process, field visit reports, and implementation cost and reimbursement documentation will be kept on file at the District's office.

Program documents including the Program Description, Administration Guidelines, and all standard forms used for the Program will be digitally maintained by the Program Manager on the District computer system.

Appendix A: Request for Reimbursement Form

For District Use Only

Date Received: _____

REQUEST FOR REIMBURSEMENT
(SSJID On-Farm Water Conservation Program, 2013)

1. Applicant name _____
2. Mailing address _____
3. Telephone # _____ Email _____
4. Assessor's Parcel Number (APN) _____
5. SSJID Delivery Location (example: "Lat. Wc, St. 120") _____
6. Field size (acres) _____ 7. Crop _____
8. Tax ID# for recipient of reimbursement _____

Summary of Costs and Requested Reimbursement Amounts

Conservation Measure	Total Cost for Field[1]	Cost per Acre[2]	Cost Share Percent[3]	Maximum Cost Share[4]		Requested Reimbursement[5]	
				$ per Field	$ per Acre	$ per Field	$ per Acre
Delivery Measurement for Pumped Deliveries	$_____	$_____	80%	$4,500		$_____	
Conversion from Flood to Sprinkler Irrigation[6]	$_____	$_____	50%	$25,000	$825	$_____	$_____
Conversion from Flood to Drip Irrigation[6]	$_____	$_____	50%	$25,000	$825	$_____	$_____
Tailwater Recovery System to Prevent Runoff	$_____	$_____	50%	$25,000	$600	$_____	$_____
Other (please describe): _____ _____ _____	$_____	$_____	___%	$_____	$_____	$_____	$_____

1. Enter total cost for field as supported by attached documentation.
2. Enter total cost per acre, based on cropped acreage.
3. Cost share percent based on Program Limits. For other, grower proposed conservation measures, enter cost share % determined by SSJID as part of application review process.
4. Maximum cost share based on Program Limits. For other, grower proposed conservation measures, enter maximum cost share per field or per acre, determined by SSJID as part of application review process.
5. Enter the lesser of the Maximum Cost Share and either the Total Cost per Field multiplied by the Cost Share Percent or the Cost per Acre multiplied by the Cost Share Percent, as appropriate.
6. For fields with conversion from flood to sprinkler or drip/micro, costs for installation of a flow meter for delivery measurement should be listed separately under Delivery Measurement for Pumped Deliveries.

REQUEST FOR REIMBURSEMENT
(2013 CONSERVATION PROGRAM, CONTINUED)

For District Use Only
Date Received: _____

Attach detailed documentation of conservation measure implementation costs. Include the following:

- Invoices and receipts from equipment and service providers
- Itemized lists of work items, quantities, and costs for any costs incurred internal to the farming operation
- Other costs, as appropriate

SUBMIT COMPLETED FORM TO SSJID

(SEND TO: ON-FARM CONSERVATION PROGRAM MANAGER, SSJID, 11011 E. HWY 120, MANTECA)

1. Your completed request will be reviewed & processed according to Program policy. A determination and recommendation by the On-Farm Water Conservation Program Manager will be made as authorized by the Board of Directors.
2. Upon approval, the applicant will be notified by Program staff with the approved payment amount and time schedule for payment receipt.
3. There will be no cost for inspections by Program staff, but a final inspection and approval will be required before reimbursement is made. Contact Julie Vrieling at (209) 249-4675 to schedule a field visit.
4. By signing below, the applicant states that the conservation measure implementation costs documented herein are complete and accurate to the best of his/her knowledge.

APPLICANT SIGNATURE _____ DATE _____

Appendix B: Recommendation for Reimbursement Form

Date: _____

RECOMMENDATION FOR REIMBURSEMENT
(SSJID On-Farm Water Conservation Program, 2013)

1. Applicant name _____
2. Mailing address _____
3. Telephone # _____ Email _____
4. Assessor's Parcel Number (APN) _____
5. SSJID Delivery Location (example: "Lat. Wc, St. 120") _____
6. Field size (acres) _____ 6. Crop _____
7. Tax ID# for recipient of reimbursement _____

8. Conservation Measures Implemented:

   Physical Improvement(s): _____

   Grower Proposal: _____
9. Field Visit Date: _____ SSJID Representative: _____
10. Conservation Measure Implemented According to Applicable Standards? ___ Yes ___ No
11. Summary of Recommended Cost Share Reimbursements

Conservation Measure	Recommended Reimbursement	
	$ per Field	$ per Acre
Delivery Measurement for Pumped Deliveries	$_____	
Conversion from Flood to Sprinkler Irrigation	$_____	$_____
Conversion from Flood to Drip Irrigation	$_____	$_____
Tailwater Recovery System to Prevent Runoff	$_____	$_____
Other (please describe): _____ _____	$_____	$_____

TOTAL RECOMMENDED REIMBURSEMENT FOR FIELD $_____

Approved By Program Manager: _____ Date _____

Appendix C: Sample Field Visit Record

Date: _____

FIELD VISIT RECORD

1. Date _____ SSJID Representative: _____
2. Applicant _____
3. Assessor's Parcel Number (APN) _____
4. SSJID Delivery Location (example: "Lat. Wc, St. 120") _____
5. Conservation Measures Implemented:

   Physical Improvement(s): _____

   Management Practice(s): _____

   Grower Proposal: _____
6. Purpose of Field Visit: Verify Implementation to Standards _____ Other (explain): _____

_____

_____

7. Conservation Measure Implemented According to Applicable Standards? ___ Yes ___ No

List applicable standards, and deficiencies, as applicable: _____

_____

_____

_____

_____

_____

CHECKLIST

___ Sketch of Field Layout (include field boundary, delivery point, wells, irrigation system components, drainage outlets, etc.)

___ Photographs (include crop, delivery location, wells, irrigation system components, drainage outlets, etc.)

___ Specific materials listed in grower cost documentation. Verify presence of components, including pump mfr. and capacity, pipe materials and dimensions, filters, etc. (as applicable)

Appendix D: Participation Projections Based on Available Funding

The following table (Table D-1) provides a projection of the number of fields and acres participating in the program in 2013 based on available funding and assumptions related to cost share amounts per field, field size, and other factors. These estimates are meant to provide a rough estimate of the number of applications that will be approved and the corresponding administrative requirements to aid in District projections of staffing required to implement the Program. Note that in the totals at the bottom of the table, it is assumed that all fields converting to sprinkler or drip/micro irrigation will also participate in delivery measurement for pumped deliveries.

Table D-1. Project Participation Expressed as Number of Fields and Acres to Support Projections of Staffing Requirements.

Conservation Measure Category	Conservation Measure	Number of Fields	Approx-imate Acres	Unit Cost Share		Total Cost Share	Category Total	Max. per Grower for Measure
				per field	per acre			
Physical Improvements	Delivery Measurement for Pumped Deliveries	42	800	$4,500		$ 190,000	$ 855,000	NA
	Conversion from Flood to Sprinkler Irrigation	21	424		$825	$ 350,000		$25,000
	Conversion from Flood to Drip Irrigation	8	152		$825	$ 125,000		$25,000
	Tailwater Recovery System to Prevent Runoff	16	320		$600	$ 190,000		$25,000
Management Practices	Scientific Irrigation Scheduling	21	420	$2,250		$ 47,500	$ 95,000	$5,000
	Soil Moisture Monitoring	42	840	$1,125		$ 47,500		$5,000
Grower Proposals	Grower Proposed Conservation Measures	19	380		$500	$ 190,000	$ 190,000	$25,000
	TOTALS	**142**	**2,760**			**$ 1,140,000**	**$ 1,140,000**	

ON-FARM WATER CONSERVATION PROGRAM
2013 PROGRAM DESCRIPTION

SOUTH SAN JOAQUIN IRRIGATION DISTRICT

Table of Contents

Background and Objectives 2

Enrollment Process 3

Solicitation and Application Process 3

Eligibility Requirements 3

Selection Process 5

Conservation Measures 5

Physical Improvements 6

Delivery Measurement for Pumped Deliveries 6

Conversion from Flood to Sprinkler or Drip/Micro Irrigation 7

Tailwater Recovery Systems to Prevent Runoff 9

Management Practices 9

Scientific Irrigation Scheduling 9

Soil Moisture Monitoring 10

District Services 11

Valve Packing 11

Grower Proposals 11

Overview 11

Proposal Requirements 12

Evaluation Criteria 12

Applicable Standards and Specifications 12

Determination of Estimated Costs and Cost Share Amounts 12

Maximum Cost Share Payment per Grower 13

Interaction with Other, Non-District Programs 13

Budget Tracking 13

Payment Approval and Processing 14

Monitoring and Verification 15

APPENDIX A: Application for Program Participation A-1

APPENDIX B: Applicable NRCS Conservation Practice Standards B-1

APPENDIX C: Consent to South San Joaquin Irrigation District's Entry of Property to Read and Owner's Agreement to Maintain Flow Meter C-1

Background and Objectives

In the early 1900's, the South San Joaquin Irrigation District's system was built for flood irrigation. Over the years, the practices of growers have changed as they work to conserve water and to improve crop yields with the installation of more efficient irrigation systems and implementation of advanced farming practices. In recognition of the farmers' efforts, and to comply with State law regarding agricultural water use, SSJID provides financial incentives to accelerate improvements to the existing distribution system, enhance farm irrigation practices and provide for measurement of water usage. The intent of this Program is to engage as many growers as possible.

SSJID has developed an on-farm water conservation program (Program) to promote and incentivize on-farm physical improvements, irrigation management practices and water measurement (together referred to as Conservation Measures) that promote water conservation. From a Program perspective, water conservation is defined as use of less water to accomplish the same purpose by encouraging the efficient use of District surface water to meet crop water requirements.

SSJID's goal is to ensure that water is being used efficiently and that it is being put to beneficial use. The District has implemented the on-farm water conservation program in order to work together to achieve the shared water management goals of the growers and the District. The Program also supports ongoing efforts to preserve existing water rights and to comply with current and emerging regulations.

This Program helps the District satisfy the new regulatory requirements of California Senate Bill SBx 7-7, which took effect January 1, 2010 and mandates measurement of individual farm deliveries and implementation of Efficient Water Management Practices (EWMPs) including both District and on-farm improvements. Additionally, it is anticipated that this Program will enhance the control of available surface water and groundwater supplies while promoting improved crop production within SSJID. This program, along with other initiatives the District is evaluating, will provide improved farm delivery measurement and support compliance with SBx 7-7.

A focused set of conservation measures have been included in the Program. In addition, a provision has been included for growers to propose other conservation measures they believe will result in improved water management on their fields, subject to District approval. In future years, additional conservation measures may be added based on experience with the Program.

Cost shares made available by the Program have been approved for the 2013 growing season. This document provides a detailed description of the 2013 Program to be implemented in November 2012. Cost share offerings for implementation of conservation measures for 2014 will be the subject of future Board decision. For the 2013 Program, participants will be eligible for cost share payments for conservation measures implemented after the Program start date of Monday, November 5, 2012. Applications will be available and accepted on the start date.

Enrollment Process

Solicitation and Application Process

The program will be launched in November 2012 through an announcement on the SSJID web site and through the SSJID Newsletter mailed to SSJID water users.

Growers are invited to submit applications for one or more fields (Appendix A). For each field, the grower will select one or more conservation measures for implementation from a pre-approved list. Additionally, growers may propose additional conservation measures of their choosing. Fields will be selected by the District for implementation individually from each application provided that they are complete, pass minimum eligibility requirements, and provided that funding is available, as described in the following sections. Additionally, for some conservation measures (conversion from flood to sprinkler or drip/micro irrigation and grower proposed conservation measures not included on the preapproved list) the application will be reviewed to ensure compatibility with the SSJID distribution system and operations. The District reserves the right to restrict the amount of participation by a particular grower or a particular field.

As mentioned above, each application must be complete to be considered for inclusion in the Program. A complete application will have all applicable portions of the application filled in and, in the case of grower-proposed conservation measures, complete applications will include sufficient documentation to support evaluation of the conservation measure by the District. Required documentation for grower-proposed conservation measures is described later in this Program Description under Grower Proposals.

For additional information, contact Program Manager Julie Vrieling at (209) 249-4675 or email jvrieling@ssjid.com.

Eligibility Requirements

The following eligibility requirements apply to all fields applying to enter the Program.

- Minimum Field Size – The minimum field size for inclusion in the Program is 10 acres, based on the net irrigated acreage of the field. The 10-acre threshold is additionally the acreage above which the recharge fee applies to fields within the District.

  Growers with fields less than 10 acres in size may submit an application. The District will evaluate whether there is sufficient potential for water conservation to be achieved to warrant the administrative time required to include the field in the Program. Proposals to enroll fields less than 10 acres in size will be evaluated on a case by case basis.

- Current SSJID Water User – For a field to be eligible for the Program, it must be or become a current SSJID surface water user as a condition to approval of any funding. For physical improvements, the participant agrees to use SSJID surface water for a period of not less than 5 years.

- Water Charges Current – At the time of enrollment, all of the grower's SSJID water charges must be or become current.

- On-Farm Measurement – For fields entering the Program with pumped deliveries, the participant agrees to install a meter to measure farm deliveries, in accordance with the conservation measure Delivery Measurement for Pumped Deliveries, as described in this document, including any reconfiguration of the pump discharge needed to facilitate accurate measurement while maintaining the pump flow rate. The participant will agree to perform repairs, maintenance, or replacement of water measurement devices as needed to ensure accurate measurement into the future.

  The participant agrees to allow SSJID to periodically record flow rate and delivery amounts using the meter and, at the District's option, to perform repairs, maintenance, or replacement as needed to ensure accurate measurement into the future. Additionally, all participants agree to allow meters to be installed by the District on a case-by-case basis for flood deliveries, if the District determines that site conditions support accurate delivery measurement.

- Satisfactory Performance in Prior Programs – If applicable, applications may be denied due to less than satisfactory performance in prior District programs.

- Cost Share – The District's maximum share of cost will be a set percentage of the participant's implementation cost.

- Program Award/Modification – the District will review and select applications for participation in the Program based on its determination of which applications best meet

the Program objectives. The District may modify the terms for participation in the Program at any time, but will not reduce its commitment applicable to a particular field after a participant has received notice of approval from the District.

Selection Process

Fields will be considered on a first-come, first-served basis. An application will be considered approved when the District issues written notice of approval to the applicant at the address specified on the application. The terms of approval and the conditions for District payment will be stated in the notice. Fields will be considered for approval until available funds allocated to each conservation measure of the Program are fully committed for each year, based on the assumption that actual reimbursement costs for cost share payments, as described later in this document, will be the maximum allowable payment per field. If after actual payments are made remaining funds are available, additional fields will be considered in the order in which their applications were received.

In order to encourage adoption of a variety of conservation measures, a total budget will be allocated for each conservation measure, including grower-proposed measures, as described in the Budget Tracking section of this document.

Approved conservation measures must be completed within 1 calendar year of the date of approval to be considered eligible for cost share payments. Requests for reimbursement must be submitted to the District within the 1 year period. Conservation measures started prior to the approval date are not eligible for cost share payments.

Conservation Measures

Conservation measures as described herein are classified as either physical improvements or management practices. Physical improvements include conservation measures involving substantial physical changes to a field. Management practices include collection of information and development of recommendations to aid in improved irrigation management to meet crop water needs.

All measures must be constructed or implemented according to Program standards prior to receiving reimbursement. For physical improvements, all measures must have been inspected and approved by SSJID staff prior to reimbursement. For management practices, payment will be made following the receipt of operational reports (soil moisture monitoring data and/or irrigation scheduling recommendations) under the provision that service provider will provide these data for the full irrigation season for which the field is enrolled in the Program. For both physical improvements and management practices, documentation of costs must be provided to the District's satisfaction prior to reimbursement.

As described in the Background and Overview section of this Program Description, for the 2013 Program, participants will be eligible for cost share payments for conservation measures implemented after the Program start date of November 5, 2012.

Physical Improvements

Delivery Measurement for Pumped Deliveries

Delivery measurement for pumped deliveries consists of installing a flow meter to measure SSJID water deliveries for existing or new pumped SSJID deliveries. In some cases, the existing pump discharge piping may need to be reconfigured to provide an adequate straight section of pipe without bends or other obstructions to allow for accurate flow measurement using a flow meter.

This conservation measure is applicable to any case in which SSJID water is delivered to a pump that pressurizes irrigation water for application via a sprinkler, drip, or micro system. Minimum standards for the measure are:

- Seametrics AG2000 Irrigation Magmeter, McCrometer Ultra Mag flow meter, or approved equal
    - Installed with at least 3 diameters of straight pipe upstream of meter and 2 diameters of straight pipe downstream of meter (see Figure 1)
    - Provided with continuous power supply
    - Equipped with telemetry hardware allowing integration to the District's Supervisory Control and Data Acquisition (SCADA) System
    - Equipped with an internal datalogger[1]
- The participant agrees to perform repairs, maintenance, or replacement of water measurement devices as needed to ensure accurate measurement into the future.
- The participant agrees to allow the District to record delivery flow rates and volumes periodically for the life of the meter and to allow the District, at its option, to perform any repair, maintenance, or replacement, as needed to ensure accurate measurement into the future.
- The land owner must sign an SSJID agricultural Meter Service Agreement (Appendix C) as part of implementation of this conservation measure.
- The participant agrees to allow the District, at its option, to install telemetry, including but not limited to a solar panel, mast, antenna and other necessary equipment to remotely monitor delivery flows using the flow meter.

[1] For the McCrometer Ultra Mag flow meter, an external datalogger is required and is subject to approval by SSJID.

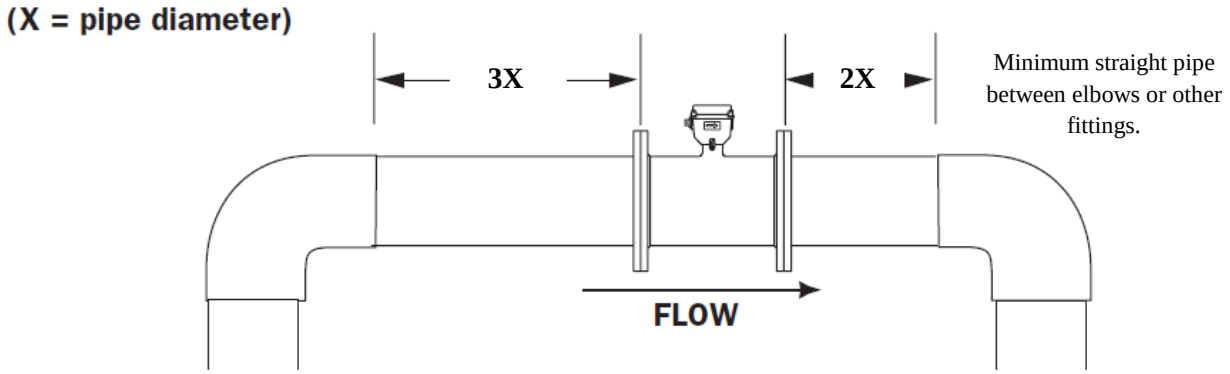

Figure 1. Example Magnetic Flow Meter Installation.

This measure will be included with any participating fields installing a sprinkler or drip irrigation system as described under the following conservation measure. All growers implementing this measure are required to agree to allow the District to read the flow meter periodically for purposes of delivery record keeping for the life of the device.

The estimated cost for planning purposes is $5,650 per location based on the estimated purchase and installation cost of a 12" mag meter, plus a contingency to allow for re-plumbing of pipe discharge to allow for adequate length of straight pipe to install the meter in some cases.

The District's cost share for delivery measurement of pumped deliveries will be 80% of the actual cost, not to exceed $4,500.

Conversion from Flood to Sprinkler or Drip/Micro Irrigation

Conversion from flood to sprinkler or drip irrigation consists of installing a sprinkler, drip, or microspray irrigation system on an existing field that is currently flood irrigated. The conservation measure includes installation of the pump, filtration, mainlines, laterals, and emitters for the system. Adoption of this conservation measure additionally requires installation of an SSJID approved sump to allow for pumping of canal water along with adoption of the conservation measure Delivery Measurement for Pumped Deliveries, described previously.

Conversion from flood to sprinkler or drip irrigation is generally applicable throughout SSJID, except where delivery system physical and operational constraints limit the District's ability to meet the delivery needs of sprinkler or drip/micro systems. Although the primary crops currently irrigated using sprinkler or drip irrigation are trees and vines, this conservation measure could also apply to the installation of a sprinkler system to irrigate pasture or field crops, for example. **Applications for conversion to sprinkler or drip/micro irrigation will be evaluated on a case by case basis to determine whether the District can continue to provide canal water to meet crop water needs following irrigation system conversion. Only fields located such that the District can supply surface water at the flow rate and irrigation intervals required after conversion will be approved.**

Minimum standards for this measure have been identified based on the NRCS Conservation Practice Standards listed in Table 1, below. These standards are included in Appendix B of this document.

Table 1. NRCS Conservation Practice Standards Applicable to Conversion from Flood to Sprinkler or Drip Irrigation.

NRCS Conservation Practice Standard	Applies to Conversion from Flood to:	
	Sprinkler	Drip or Micro
Irrigation System, Sprinkler (442)	✓	
Irrigation System, Microirrigation (441)		✓
Pumping Plant (533)	✓	✓
Underground Plastic Pipe (430DD and 430EE, as applicable)	✓	✓

Additionally, the following requirements developed by SSJID shall apply:

- No filters may back flush to District pipelines or open canals
- Each system must be designed by an Irrigation Association Certified Irrigation Designer
- Design Distribution Uniformity must be at least 75% for sprinkler systems and at least 90% for drip or micro systems
- Participants are responsible for submitting an Application for Structure Permit and constructing a District-approved sump prior to receiving reimbursement for system installation costs under this conservation measure.

The estimated cost for conversion from flood to sprinkler or drip/micro for planning purposes is $1,650 per cropped acre based on estimated materials and installation costs of a complete system including pump, filtration, mainlines, laterals, and emitters. The estimated costs are based on discussion with local irrigation suppliers and review of NRCS EQIP cost estimates. Reimbursement for sump costs will be made separately through the ongoing District sump program. Reimbursement for flow meter costs will be made separately under the Program based on the Delivery Measurement for Pumped Deliveries conservation measure, described previously.

The District's cost share for conversion from flood to sprinkler or drip irrigation will be 50% of the actual cost, not to exceed $825 per cropped acre. Additionally, the cost share payment will be limited to a maximum of $25,000 per grower for each measure. Conversion from flood to

drip and conversion from flood to sprinkler are considered different measures for purposes of determining the maximum cost share per grower for each measure. As described, this cost share does not include installation of a sump or delivery measurement for pumped deliveries, which will be treated separately.

In addition to conversion from flood to sprinkler or drip/micro irrigation, the District may consider conversion of sprinkler to drip/micro irrigation or replacement of old sprinkler or drip/micro systems.

Tailwater Recovery Systems to Prevent Runoff

Tailwater Recovery Systems to Prevent Runoff consist of systems to collect and convey tailwater to the head of the field from which the tailwater was generated or another nearby field for the purpose of recovering and reapplying the tailwater to supplement irrigation deliveries. For this Program, tailwater recovery systems are targeted at fields that periodically drain tailwater back into the SSJID distribution system where it currently is delivered to a downstream user or spills from the system. SSJID discourages and in the future may no longer allow drainage of tailwater into the distribution system. This conservation measure applies to any field for which tailwater is produced during irrigation that drains back to the SSJID irrigation system. It is anticipated that this only occurs for flood irrigated fields.

Minimum standards for this measure have been identified based on the NRCS Conservation Practice Standards for Irrigation System, Tailwater Recovery (447), Pumping Plant (533), and Underground Low Pressure Plastic Pipe (430EE), included in Appendix B of this document.

The estimated cost of tailwater recovery systems for planning purposes is $1,200 per cropped acre based on estimated materials and installation costs of a complete system including tailwater pond, tailwater return pipeline, and pump. The estimated costs are based on estimated quantities and unit costs for system components and based on review of NRCS EQIP cost estimates.

The District's cost share for tailwater recovery systems will be 50% of the actual cost, not to exceed $600 per cropped acre. Additionally, the cost share payment will be limited to a maximum of $25,000 per grower for this measure.

The District will also consider grower proposals to reduce drainage through laser land leveling and deep ripping, for example. Interested growers may submit a proposal as described under "Grower Proposals," included later in this document.

Management Practices

Scientific Irrigation Scheduling

Scientific Irrigation Scheduling consists of the determination of the frequency, rate, and duration of irrigation application needed to meet crop water requirements while minimizing excess

tailwater and deep percolation. Typically, this determination is based on a combination of soil moisture monitoring and root zone water balance calculations based on estimates of crop water use (evapotranspiration, or ET). Scientific irrigation scheduling is applicable to all irrigated crops, regardless of irrigation system type or soil conditions.

In most cases, the optimum frequency, rate, and/or duration of irrigation is constrained by available water supply, the delivery system, the soil, or the irrigation system itself. In the case of SSJID, the delivery frequency and flow rate are generally fixed under current system operation, providing flexibility almost exclusively in the duration of irrigation.

Under the Program, the District requires that scientific irrigation scheduling be conducted by approved service providers using proven technologies. Additionally, the District requires that irrigation recommendations be submitted to both the participating grower and to the District by the service provider. To request a list of preapproved service providers, contact Julie Vrieling at (209) 249-4675 or email jvrieling@ssjid.com.

The estimated cost of scientific irrigation scheduling for planning purposes is $3,000 per field per season, which represents the average seasonal cost for a consulting service to provide irrigation recommendations for an individual field based on discussion with consultants serving the San Joaquin Valley. The difference in cost between consultants depends largely on whether continuously recording soil moisture monitoring equipment is installed in the field; costs will likely be substantially less for weekly field visits using portable soil moisture monitoring equipment.

Unlike physical improvements, the District will pay a portion of the total cost of the scientific irrigation scheduling service directly to the service provider. The portion that the District is willing to pay will be a one-time payment of 75% of the actual cost, not to exceed $2,250 per field. The maximum payment for Scientific Irrigation Scheduling will be limited to $5,000 per grower.

Soil Moisture Monitoring

Soil Moisture Monitoring consists of tracking the moisture content of the crop root zone over the course of the growing season to evaluate whether irrigation practices are sufficient to maintain adequate soil moisture content while limiting excess deep percolation. Soil moisture monitoring is a key component of scientific irrigation scheduling and is applicable to all irrigated crops, regardless of irrigation system type or soil conditions. For the Program soil moisture monitoring is offered as a stand-alone conservation measure to assist growers in tracking soil water content, or it may be implemented as part of scientific irrigation scheduling, described previously.

Under the Program, the District requires that soil moisture monitoring be conducted by approved service providers using proven technologies. Additionally, the District requires that duplicate soil moisture monitoring reports be submitted to both the participating grower and to the District

by the service provider. To request a list of preapproved service providers, contact Julie Vrieling at (209) 249-4675.

The estimated cost of soil moisture monitoring for planning purposes is $1,500 per field per season, which represents the average seasonal cost for an agronomic consulting service to provide soil moisture monitoring reports for an individual field. The estimated costs are based on discussion with agronomic consultants serving the San Joaquin Valley. The difference in cost between providers depends largely on whether continuously recording soil moisture monitoring equipment is installed in the field; costs will likely be substantially less for weekly field visits using portable soil moisture monitoring equipment.

Unlike physical improvements, the District will pay a portion of the total cost of the soil moisture monitoring service directly to the service provider. The portion of the cost incurred that the District is willing to pay will be 75% of the actual cost, not to exceed $1,125 per field. The maximum payment for Soil Moisture Monitoring will be limited to $5,000 per grower.

District Services

Valve Packing

Valve packing is a service that was traditionally provided by the District to repack irrigation valves to reduce valve leakage. Valve packing is applicable wherever large flood irrigation valves installed on District pipelines are used. Growers are to make arrangements to have their valves packed by contacting Julie Vrieling at (209) 249-4675. District staff will repack the valves. Valves will be packed according to manufacturer specifications, if applicable.

Growers will be charged a fee for valve packing to cover District labor and materials costs for repacking the valves. Additionally, the grower is responsible for the removal and reinstallation of the valve, as well as delivery to and pickup from the District. The District may restrict the availability of this service depending on the availability of personnel.

Grower Proposals

Overview

As part of the Program, growers are given the opportunity to submit proposals for District cost share to implement conservation measures in addition to those described previously. These proposals will be evaluated on a case by case basis as described below. The allowance for individual grower proposals provides flexibility in the types of conservation measures included. These measures could include irrigation reservoirs, laser land leveling, deep ripping, installation of pipelines to replace open ditches, dust control, or other measures identified by the applicant for his or her field.

Proposal Requirements

Grower proposals to implement conservation measures not listed previously must include the following information:

- Description of conservation measure to be implemented, including a description of all physical changes to the field and corresponding irrigation management changes
- Itemized cost list giving estimated costs of major system components, with supporting documentation if available
- Sketch of field showing field location and physical changes to field, if applicable
- Description of how the proposed conservation measure will result in water conservation

Evaluation Criteria

Proposals for additional conservation measures will be evaluated by SSJID staff based on the following considerations:

- Completeness of proposal – the proposal must include the requested information at a sufficient level of detail to allow for evaluation by the District.
- Demonstrated effectiveness – the proposed conservation measure must be based on a demonstrated method of reducing deep percolation, tailwater, or other losses (i.e., seepage from farm ditches or evaporation). The proposed measure must be demonstrated conclusively in the SSJID area or other areas with sufficiently similar conditions, and it must be suitably applied. The District may consider new innovations, provided that they are accompanied by a clear description of how the measure will result in water conservation.
- No special administrative requirements – the proposed measure must not cause a burden to SSJID with respect to the continued delivery of irrigation water or to the administration of the Program. The measure must be observable to ensure that implementation of the measure can be documented for verification purposes.

Applicable Standards and Specifications

Proposed measures must be implemented to existing industry standards (e.g., NRCS conservation practice standards), to the extent that established standards exist. In all cases, SSJID may place requirements on measure implementation to ensure that the measure has the potential to be effective and does not provide an undue burden on SSJID water delivery practices or Program administration. Standards will be identified on a case by case basis but will be applied uniformly to all fields proposing to implement a given conservation measure.

Determination of Estimated Costs and Cost Share Amounts

Estimated conservation measure costs will be developed by reviewing grower estimates of costs along with other available sources including NRCS cost share lists and information from

irrigation equipment providers or other appropriate sources. Cost share percentages will be determined by SSJID staff on a case by case basis but will be applied uniformly to all fields proposing to implement a given conservation measure. Cost share percentages will be set in part based on relative benefits to the grower and to the District of implementing the measure. In general, it is anticipated that physical improvements will be funded at up to 50% of implementation cost, and management practices will be funded at up to 75% of implementation cost, but the particular cost share will be determined on a case by case basis. In all cases, cost share amounts will be limited based on the estimated implementation cost, which will be determined by staff before the proposal is approved. Additionally, the cost share payment will be limited to a maximum of $25,000 per grower for this measure.

Maximum Cost Share Payment per Grower

In addition to the payment limitations described previously for each conservation measure, the total cost share for 2012 for all fields enrolled by a grower will be limited to $50,000.

Interaction with Other, Non-District Programs

Other Programs may provide cost share payments for implementing conservation measures included in this Program. For example, programs offered by the Natural Resources Conservation Service of the USDA, such as the Environmental Quality Incentives Program (EQIP), offer cost share of 50% (or more in some cases) to cover the cost of installing sprinkler systems, drip/micro systems, tailwater recovery systems, or other on-farm improvements.

Participation in the SSJID On-Farm Water Conservation Program does not prevent growers from participating in EQIP or other Federal programs. Similarly, participation in EQIP or other Federal programs does not prevent participation in the SSJID On-Farm Water Conservation Program.

Budget Tracking

The total budget for cost share payments is $1.14 million for 2013. Initially, cost share amounts will be allocated for each conservation measure as described in Table 2.

Table 2. Initial 2013 Budget Amounts by Conservation Measure Category.

Conservation Measure Category	2013 Budget by Conservation Measure
Physical Improvements	
Delivery Measurement for Pumped Deliveries	$ 190,000
Conversion from Flood to Sprinkler or Drip/Micro	$ 475,000
Tailwater Recovery Systems to Reduce Runoff	$ 190,000
Management Practices	
Scientific Irrigation Scheduling	$ 47,500
Soil Moisture Monitoring	$ 47,500
Grower Proposals	$ 190,000
TOTAL	$ 1,140,000

The budget amounts will be reviewed periodically and may be adjusted based on the number of applications received for each conservation measure at the discretion of the Program Manager.

As applications for participation are received, they will be added to a list in the order they are received. At any given time, the applications subject to review and approval will be limited to those for which the total potential cost share is less than the total available budget by conservation measure category. If upon review, the District does not approve an application, the associated cost share will be released to fund applications received later within that category. As documentation of actual costs is received by the District from participating growers, the difference between the cost share limit and the actual cost share amount paid for each category, if any, will likewise be released to fund applications received later in the order in which they were received.

Payment Approval and Processing

Upon receipt of a request for payment and documentation showing actual payment of the incurred conservation measure implementation costs from an approved applicant, the District will verify that the measure has been implemented (as described in the following section) and payment will be issued based on the Program cost share percentage for the measure or measures implemented and based on the actual cost, not to exceed the cost share limit for the measure or measures.

Requests for reimbursement must be accompanied by documentation of implementation costs, including invoices and receipts from equipment and service providers, along with proof of payment. Costs incurred by the grower internal to his or her operation that are associated with the installation of the conservation measure are not considered eligible for reimbursement.

Payments will be issued as a separate check to the participating grower, rather than as a reduction in water charges. It is anticipated that payment will be made within 30 days of the District's verification that the measure was implemented.

Monitoring and Verification

Monitoring and verification of implementation of conservation measures will be accomplished through a combination of documentation of implementation costs (receipts and payments) and operational reports (flow measurement records, soil moisture monitoring reports, and irrigation recommendations), along with field visits to verify that physical improvements are implemented according to Program standards. Additionally, the District will seek feedback from participating growers in the form of interviews or questionnaires with the objective of evaluating the Program and documenting changes to irrigation practices resulting from conservation measure implementation.

APPENDIX A: Application for Program Participation

For District Use Only

Date Received: _____

APPLICATION FOR ON-FARM WATER CONSERVATION PROGRAM

1. Applicant/Landowner name _____ email _____
2. Mailing address _____
3. Telephone # _____

Complete one application for each field to be included in the Program. All measures must be implemented after the application approval date and completed within 1 year to be eligible for reimbursement.

SUBMIT COMPLETED APPLICATION TO SSJID

1. A detailed design plan and cost estimate must be submitted with applications including physical improvements to a field.
2. Your application will be reviewed and processed according to District policy and as described in the Program Description. A determination will be made as to the eligibility and potential effectiveness of the proposed conservation measure or measures for each field, and a recommendation will be made to the General Manager, Jeff Shields.
3. Following review, you will be sent a letter summarizing the conservation measures approved for implementation for each field application and providing explanation of why any fields or conservation measures were not approved, if applicable.
4. **COST SHARE PAYMENTS ARE NOT GUARANTEED UNTIL YOUR APPLICATION HAS BEEN APPROVED.**
5. If you have any questions concerning your Application please feel free to contact Julie Vrieling at (209) 249-4675.
6. By signing below, you agree to implement the conservation measures described in this application and to abide by all Program requirements as described in the Program Description.

APPLICANT/LANDOWNER SIGNATURE _____

DATE _____

APPLICATION FOR ON-FARM WATER CONSERVATION PROGRAM (CONTINUED)

BASIC INFORMATION

1. Applicant/Landowner name _____
2. Assessor's Parcel Number (APN) _____
3. SSJID Delivery Location (example: Lat. Wc, St. 120) _____
4. Field size[1] (acres) _____ 6. Crop _____

PROPOSED PHYSICAL IMPROVEMENTS
(Select up to one of the following by entering an "**X**" to the right of the description)

1. Delivery Measurement for Pumped Deliveries _____
2. Conversion from Flood to Sprinkler Irrigation[2] _____
3. Conversion from Flood to Drip/Micro Irrigation[2] _____
4. Tailwater Recovery System to Prevent Runoff _____

PROPOSED MANAGEMENT IMPROVEMENTS
(Select up to one of the following)

1. Scientific Irrigation Scheduling _____
2. Soil Moisture Monitoring _____

OTHER CONSERVATION MEASURES[3] _____

For other conservation measures, attach one or more sheets including the following information as described in the Program Description:

- Description of conservation measure to be implemented, including description of physical changes to the field and irrigation management changes
- Sketch of field showing field location and physical changes to field, if applicable
- Description of how the proposed conservation measure will result in water conservation

Have you applied for funding for these conservation measures under any other programs, such as NRCS EQIP? Yes ___ No ___

APPLICANT/LANDOWNER SIGNATURE _____ DATE _____

---

[1] Fields less than 10 acres in size will be considered for participation on a case-by-case basis based on the potential to achieve water conservation as described in the Program Description.

[2] Conversion from flood to sprinkler or drip/micro must include the delivery measurement for pumped deliveries conservation measure.

[3] Other conservation measures will be considered as described in the Program Description.

APPENDIX B: Applicable NRCS Conservation Practice Standards

The following NRCS Conservation Practice Standards are attached:

1. Irrigation System, Sprinkler (442)
2. Irrigation System, Microirrigation (441)
3. Pumping Plant (533)
4. Irrigation Pipeline (430)
5. Irrigation System, Tailwater Recovery (447)
6. Irrigation Reservoir (436)
7. Precision Land Forming (462)
8. Deep Tillage (324)
9. Dust Control on Unpaved Roads or Surfaces (373)

APPENDIX C: Consent to South San Joaquin Irrigation District's Entry of Property to Read and Owner's Agreement to Maintain Flow Meter

AFTER RECORDING RETURN TO:

SOUTH SAN JOAQUIN IRRIGATION DISTRICT
P.O. Box 747
Ripon, CA 95366

CONSENT TO
SOUTH SAN JOAQUIN IRRIGATION DISTRICT'S
ENTRY OF PROPERTY TO READ
AND OWNER'S AGREEMENT TO MAINTAIN FLOW METER

The undersigned owner of the property _____, located at _____, APN _____("Property") and further described in the attached Exhibit "A", has, with the financial assistance of South San Joaquin Irrigation District ("District"), installed a flow meter to measure deliveries of District surface water to the Property. State law requires that starting in July 2012, the District base its water charges, at least in part, on the quantity of water it delivers. The District will use flow meter measurements in future water charges after its Board of Directors approves a policy that requires water charges be based at least in part on the measurement of quantity delivered.

Owner consents to the entry of District officers, employees or agents ("District Personnel") on the Property for the purposes of inspecting and reading the flow meter installed to measure deliveries of District surface water to the Property. District Personnel may enter the Property at any reasonable hour and on a monthly basis or at such other time as District reasonably determines to be necessary, to inspect the working condition of the meter and to record water usage. District shall also be permitted to enter the Property for the purpose of installing telemetry control hardware to the meter such that the meter can be read remotely. District Personnel may enter the Property outside any District easement area using marked District vehicles on available access roads, on foot or as Owner and District may otherwise agree. District shall use reasonable care to avoid interfering with Owner's farming operations.

Owner agrees to take no action that would prevent the meter from accurately measuring the volume of District surface water delivered to Owner's Property. If District determines that the meter is nonfunctioning, Owner agrees to repair or replace the meter at Owner's expense.

This Consent shall remain in effect until such time as deliveries of District surface water to the Property shall terminate as evidenced by recordation of an Irrigation Service Abandonment Agreement signed by District and Owner or Owner's success or in interest.

This Consent shall run with the land described above and be binding on Owner and Owners' heirs, successor and assigns.

SOUTH SAN JOAQUIN IRRIGATION DISTRICT

"DISTRICT"

By_____ Date:_____ By_____ Date:_____

John Holbrook, President Jeff Shields, Secretary

Board of Directors Board of Directors

"OWNER(S)"

By_____ Date:_____ By_____ Date:_____

Mailing Address: _____

_____

Phone Number:_____

SIGNATURES MUST BE NOTARIZED AND BE PER RECORDED DEED

ON-FARM WATER CONSERVATION PROGRAM
2014 ADMINISTRATIVE GUIDELINES

SOUTH SAN JOAQUIN IRRIGATION DISTRICT

November 2013

Table of Contents

SOUTH SAN JOAQUIN IRRIGATION DISTRICT 1
Table of Contents i
Overview and Purpose 1
Program Administration Tool 1
Finance 2
Enrollment 2
Advertisement 2
Selection and Notification 2
District Valve Packing Service 7
Monitoring and Verification 7
Field Visits 7
Documentation of Conservation Measure Implementation Costs 8
Operational Reports 8
Cost Share Payments 8
Program Tracking and Overall Management 9
Data Management 10
Appendix A: Request for Reimbursement Form 1
Appendix B: Recommendation for Reimbursement Form 1
Appendix C: Sample Field Visit Record 1

Overview and Purpose

On October 27, 2009, the Board approved funding for an incentive-based on-farm conservation program ("Program") to promote water conservation within SSJID. On September 24, 2013, the Board approved funding for the 2014 Program in the amount of $738,000 for cost share payments to growers to incentivize implementation of conservation measures. It is anticipated that the Program will be funded at a similar level in 2015. The Board may decide to fund the Program in later years at its discretion. It is anticipated that some aspects of the Program, including grower outreach and District-provided valve packing services will be provided on an ongoing basis.

The program will be administered by Julie Vrieling, On-Farm Water Conservation Program Manager, who will report to Sam Bologna, Engineering Department Manager and Jeff Shields, General Manager.

On September 24, 2013, the Board approved the 2014 Program structure as described in the 2014 Program Description. The 2014 Program Description describes the enrollment process, conservation measures included in the Program, budget tracking, payment approval and processing, and monitoring and verification. Additionally, the Program Description includes an application for enrollment and applicable NRCS conservation practice standards for on-farm improvements. The 2014 Program Description serves as a document describing how the Program works to SSJID growers and to the broader community.

The purpose of this document is to provide guidelines to District staff for management and administration of the 2014 SSJID On-Farm Water Conservation Program to be implemented November 12, 2013. It is anticipated that these guidelines will evolve over time along with the Program Description based on experience implementing the Program and based on changes to District facilities and operations as well as changes to farming practices within the District.

Program Administration Tool

The Program Administration Tool (PAT) consists of a spreadsheet tool with a record for each application and field that contains details of the application and conservation measures implemented, eligibility and selection results, and records of costs, payments, monitoring, and verification. The PAT provides a centralized location for records describing the Program while additionally supporting administration of the Program by allowing past and future payments to be tracked to guide the selection process, preventing approval of applications that could result in cost share payments exceeding the available budget.

Finance

Periodic reporting to District finance staff will be performed by the Program Manager in addition to submittal of payment requests for cost share payments to participants. Periodic reports will include projections of the timing and amounts of future cost share payments to support cash flow management. These reports will be generated on a monthly basis using the information stored in the PAT. Requests for cost share payments will be submitted to the finance staff as they are completed.

Enrollment

This section describes the process for enrollment, with an emphasis on staff activities needed to advertise the Program, select applications for cost share payments, and notify participants of the status of their applications. The enrollment process has been designed to provide flexibility to applicants in selecting fields and conservation measures while controlling SSJID administrative requirements and facilitating overall program management and planning. The aim of providing flexibility is to encourage widespread participation covering the range of crops, locations, and existing water management practices in the District.

Advertisement

As described in the 2014 Program Description, the 2014 Program will be launched in November 2013 through an announcement on the SSJID web site and through the SSJID Newsletter mailed to the District's customers.

The announcement will invite growers to apply for the Program by obtaining the Program Description and Application, either by picking up a copy at the District office in Manteca, by requesting a copy by mail, or by downloading the documents from the District web site. All requests will be handled in a timely manner to ensure equal opportunity for growers to apply for the Program.

Selection and Notification

Upon receipt, Program staff will record the date of receipt on the application and in the PAT. Applications will be reviewed by the Program Manager or Program staff assigned by the Program Manager and either approved or declined according to the following process:

1. Initial Review

   Review application for completeness and accuracy. A complete application will have all applicable portions of the application filled in and will include a plan, as well as a quote for the Project. Complete applications will include sufficient documentation to support

evaluation of the conservation measure by the District. Incomplete applications will be returned with an explanation of the reason the application is being returned.

2. Eligibility Check

Verify the eligibility of the application as follows:

a. Minimum Field Size – The minimum field size for inclusion in the Program is 10 acres, based on the net irrigated acreage of the field.
b. Applications for Fields Less than Minimum Size
    i. If an application is received for which a single conservation measure will serve multiple fields (for example a tailwater recovery system), the total acreage of the fields should be at least 10 acres.
    ii. If the field size (or total size of all fields with a single measure) is less than 10 acres, evaluate whether there is sufficient potential for water conservation to be achieved to warrant the administrative time required to include the Field in the Program. Consider the following:
        1. What is the potential quantity of water to be conserved?
        2. For each conservation measure, what is the potential cost share per acre? Is this cost substantially greater than for larger fields implementing the same conservation measure?
        3. What is the potential cost to the District per acre-foot of water conserved? How does it compare to current market values of water for transfer?
        4. Is the field devoted to productive agriculture?
    iii. Document all determinations of eligibility for fields less than 10 acres in size and obtain approval of Program Manager.
c. Current SSJID Water User – For all fields, verify that the applicant is a current SSJID water user. Notify any applicants that are not current users that all fields submitted for funding must use or become approved to use SSJID surface water before any cost share will be approved. For physical improvements, growers agree to use SSJID surface water for not less than 5 years.
d. Water Charges Current – Verify that water charges for all fields farmed by the applicant are current.
e. On-Farm Measurement – By signing the application, growers agree to implement on-farm delivery measurement in cases where the delivery is pressurized via an on-farm pump in accordance with the conservation measure "Delivery Measurement for Pumped Deliveries." Additionally, growers agree to allow the District to implement measurement in other cases, if practical. As a result, participating fields can be included in pilot delivery measurement programs

implemented by the District to evaluate alternatives for on-farm delivery measurement, particularly for flood irrigated fields.

f. Satisfactory Performance in Prior Programs – If applicable, evaluate whether the applicant has performed satisfactorily in other Programs, such as the sump program. Document evidence and obtain approval of Program Manager for any denials of eligibility.

3. Secondary Review and Approval
   a. For eligible applications selecting one or more preapproved conservation measures, review the available Program budget based on prior cost share payments and projected payments for fields already selected but for which payments have not yet been issued. Using PAT, verify that the total of prior and projected payments is less than the available budget for each proposed conservation measure. If available budget remains, select the field for inclusion, subject to additional review.
4. Final Review and Approval
   a. For field applications for conversion from flood irrigation to sprinkler or drip/micro irrigation that have passed the initial approval process, submit the field application along with a map and other supporting information to (1) the District Engineer, (2) the Water Operations Supervisor, and (3) the Maintenance Supervisor.
      i. The District Engineering will review the application to determine whether the field can be served by SSJID within the physical constraints of the existing distribution system and make a determination whether to approve the application from an engineering perspective.
      ii. The Water Operations Supervisor will review the application to determine whether the field can be served by SSJID within the operational constraints of the existing distribution system and make a determination whether to approve the application from an operations perspective.
      iii. The Maintenance Supervisor will review the application to determine whether the field can be served by SSJID without causing undue increases to maintenance requirements.
      iv. Denial of the application by any reviewer will be documented in writing providing the reasons that the field cannot be reasonably served following conversion to sprinkler or drip/micro irrigation.
   b. Review of all applications will be completed within 30 days of receipt.
   c. The results of the review process will be summarized and provided by mail or e-mail to the applicant.

5. Notification
    a. For each application, the applicant will be notified following the Final Review and Approval process by mail or e-mail. Notifications will consist of the following:
        i. For approved fields, a copy of the field application will be provided, along with a description of any additional information or implementation requirements identified by the District as part of the review process. Additionally, a Request for Reimbursement form (Appendix A) will be provided to the applicant (hereafter referred to as participant). The following conditions of approval will be listed in the notification of approval:

            1. The approval applies only to the approved conservation measures, which will be listed in the notification.
            2. All approved conservation measures must be implemented following the date of approval and within 1 year of the date of approval to be eligible for cost share payments.
            3. Implementation must be to applicable standards for each approved conservation measure, as described in the Program Description.
            4. The participating grower is to pay all costs of the project, with the exception of the District cost share for Scientific Irrigation Scheduling or Soil Moisture Monitoring, in which case the District will pay the supplier directly.

        ii. For fields not selected, a copy of the application will be provided to the applicant, along with a description of why the field was not selected and supporting documentation.

The selection and notification process is summarized as a process diagram in Figure 1, below.

Figure 1. Process Diagram for Selection and Notification Process.

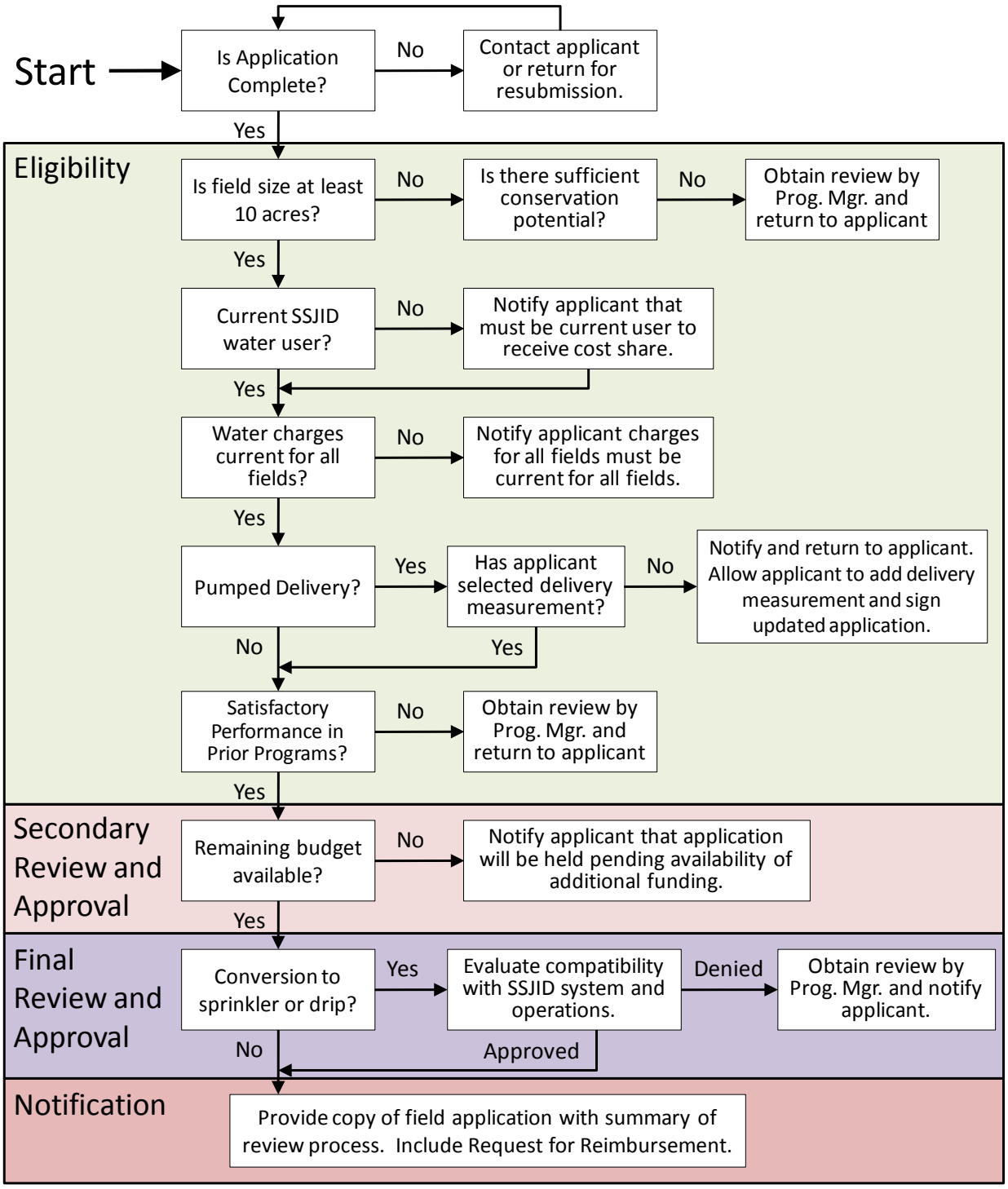

District Valve Packing Service

District valve packing for flood irrigation valves installed on District pipelines will be provided as an on-demand service by the District. Growers will be responsible for scheduling valve packing with the District by contacting Julie Vrieling at (209) 249-4675 or email jvrieling@ssjid.com. Upon approval, the grower will be responsible for removing and reinstalling the valve. The District will be responsible for packing the valve. The grower will be responsible for paying the District for the cost of valve packing material, which the District is able to purchase in bulk, along with the cost of District labor to repack the valve.

Monitoring and Verification

Following approval and notification, staff will contact approved applicants to develop an estimate of when the conservation measure will be implemented and when documentation of implementation costs will be submitted for reimbursement. A sample Request for Reimbursement form is included as Appendix A of this document. The form will be provided to the participant with the notification of approval for each approved field application.

Field Visits

Based on the timing of conservation measure implementation, staff will coordinate with the participant to schedule field visits during and following construction to verify and document implementation of physical improvements according to Program standards. A sample form and checklist for field visits has been included as Appendix C of this document. It is anticipated that this form will be refined by staff over time based on experience documenting conservation measure implementation through field visits to verify construction to applicable standards. At a minimum, the following information will be gathered during field visits:

- Photographs
- Measurements of critical dimensions and capacities
- Sketch of layout, including water sources and drainage outlets for the field
- List of key materials used in construction
- List of applicable performance criteria and confirmation that criteria are met based on conservation measure standards
- Documentation of any tests performed to verify proper operation

For management practices, field visits may be conducted to verify implementation as well. For example, field visits may be conducted to verify that soil moisture monitoring equipment is installed at the field or to meet with irrigation scheduling consultants to discuss observations and recommendations.

All field visits will be coordinated with the applicant and other involved parties in advance. A sample Field Visit Record is provided in Appendix C of this document.

Documentation of Conservation Measure Implementation Costs

Documentation of conservation measure implementation costs and proof of payment must be provided by the applicant along with the reimbursement form submitted to request a cost share payment. All documentation will be reviewed carefully by staff to verify the correct cost share amount to be paid to the grower. This documentation additionally provides verification that the conservation measure was implemented as proposed.

Operational Reports

Operational reports for conservation measures such as scientific irrigation scheduling and soil moisture monitoring will be provided by service providers directly to the District. For these conservation measures, the District will directly reimburse the supplier rather than the participating grower. A condition of reimbursement for supplier reimbursement by the District is that the service provider will supply the operational reports to the District in a timely manner. Program staff will periodically review agreements for scientific irrigation scheduling and soil moisture monitoring, and will remind suppliers for which operational reports have not been received of the need for the service provider to submit the reports.

Cost Share Payments

As described previously, requests for cost share payments will be processed following receipt of a Request for Reimbursement (Appendix A). Approved requests will be issued for each field. The Request must be accompanied by documentation of implementation costs, including invoices and receipts from equipment and service providers. Costs incurred by the grower internal to his or her operation that are associated with the installation of the conservation measure are not considered eligible for reimbursement. Staff will review documentation of all costs in detail to ensure that the quantities and costs are consistent with the conservation measure implemented and are reasonable based on typical costs as documented based on NRCS cost share lists, U.C. Cost and Return Studies (coststudies.ucdavis.edu), discussion with local suppliers, or other sources.

For each payment, Program staff will review the Request for Reimbursement and prepare a Recommendation for Reimbursement (Appendix B) for review and approval by the Program Manager. Then, the approved Recommendation for Reimbursement will be submitted to the Finance department to issue checks to the participant and service providers, as applicable.

Payment information will be entered into the PAT by Program staff.

Payment caps for individual conservation measures and for individual growers will apply as described in the Program Description. In general, growers will be limited to total SSJID cost share payments of $50,000. Payments for conversion to sprinkler or flood and for drainage relief will be limited to $25,000 per grower for each measure. Payments for scientific irrigation scheduling and soil moisture monitoring will be limited to $2,500 per grower.

Program Tracking and Overall Management

Program tracking will be achieved primarily using the Program Administration Tool (PAT). Staff will review the status of applications on an ongoing basis as they move through the enrollment process and as conservation measures are implemented and cost share is issued for selected fields. Program tracking will be conducted on approximately the following time scales, and management actions will be taken as needed to ensure maximum participation in the Program while documenting conservation actions on individual fields and ensuring the Program is implemented within the available budget:

- Daily
    - Entry of new applications into the PAT
    - Update of enrollment status through initial review, eligibility checks, secondary review, final review, and notification for individual field applications
    - Update status of field visits, including most recent field visit date, total number of field visits to date, whether implementation to Program standards was verified, whether components included in cost documentation were verified as being present in the field
    - Update of implementation cost and approved cost share information through review of Requests for Reimbursement and preparation of Recommendations for Reimbursement based on documented and approved implementation costs
- Monthly
    - Review of total applications received and approved by conservation measure and by conservation measure category
    - Update of cost share payment information based on summary of payments issued provided by finance staff
    - Development of recommendations for reallocation of funding totals by conservation measure category based on review of applications received and remaining budget by category
    - Preparation of Program summary reports for review by General Manager and Board of Directors

Data Management

Data entry, updating, and correction will be completed through the PAT. All data entry processes will be performed by Program staff. Hard copies of applications, documentation of the application review process, field visit reports, and implementation cost and reimbursement documentation will be kept on file at the District's office.

Program documents including the Program Description, Administration Guidelines, and all standard forms used for the Program will be digitally maintained by the Program Manager on the District computer system.

Appendix A: Request for Reimbursement Form

For District Use Only

Date Received: _____

REQUEST FOR REIMBURSEMENT
(SSJID On-Farm Water Conservation Program, 2014)

1. Applicant name _____
2. Mailing address _____
3. Telephone # _____ Email _____
4. Assessor's Parcel Number (APN) _____
5. SSJID Delivery Location (example: "Lat. Wc, St. 120") _____
6. Field size (acres) _____ 7. Crop _____
8. Tax ID# for recipient of reimbursement _____

Summary of Costs and Requested Reimbursement Amounts

Conservation Measure	Total Cost for Field[1]	Cost per Acre[2]	Cost Share Percent[3]	Maximum Cost Share[4]		Requested Reimbursement[5]	
				$ per Field	$ per Acre	$ per Field	$ per Acre
Delivery Measurement for Pumped Deliveries	$_____	$_____	80%	$4,500		$_____	
Conversion from Flood to Sprinkler Irrigation or Drip Irrigation[6]	$_____	$_____	50%	$25,000	$825	$_____	$_____
Drainage Relief	$_____	$_____	50%	$25,000	$600	$_____	$_____

1. Enter total cost for field as supported by attached documentation.
2. Enter total cost per acre, based on cropped acreage.
3. Cost share percent based on Program Limits.
4. Maximum cost share based on Program Limits.
5. Enter the lesser of the Maximum Cost Share and either the Total Cost per Field multiplied by the Cost Share Percent or the Cost per Acre multiplied by the Cost Share Percent, as appropriate.
6. For fields with conversion from flood to sprinkler or drip/micro, costs for installation of a flow meter for delivery measurement should be listed separately under Delivery Measurement for Pumped Deliveries.

REQUEST FOR REIMBURSEMENT
(2014 CONSERVATION PROGRAM, CONTINUED)

For District Use Only
Date Received: _____

Attach detailed documentation of conservation measure implementation costs. Include the following:

- Invoices and receipts from equipment and service providers
- Itemized lists of work items, quantities, and costs for any costs incurred internal to the farming operation
- Other costs, as appropriate

SUBMIT COMPLETED FORM TO SSJID

(SEND TO: ON-FARM CONSERVATION PROGRAM MANAGER, SSJID, 11011 E. HWY 120, MANTECA)

1. Your completed request will be reviewed & processed according to Program policy. A determination and recommendation by the On-Farm Water Conservation Program Manager will be made as authorized by the Board of Directors.
2. Upon approval, the applicant will be notified by Program staff with the approved payment amount and time schedule for payment receipt.
3. There will be no cost for inspections by Program staff, but a final inspection and approval will be required before reimbursement is made. Contact Julie Vrieling at (209) 249-4675 to schedule a field visit.
4. By signing below, the applicant states that the conservation measure implementation costs documented herein are complete and accurate to the best of his/her knowledge.

APPLICANT SIGNATURE _____ DATE _____

Appendix B: Recommendation for Reimbursement Form

Date: _____

RECOMMENDATION FOR REIMBURSEMENT
(SSJID On-Farm Water Conservation Program, 2014)

1. Applicant name _____
2. Mailing address _____
3. Telephone # _____ Email _____
4. Assessor's Parcel Number (APN) _____
5. SSJID Delivery Location (example: "Lat. Wc, St. 120") _____
6. Field size (acres) _____ 6. Crop _____
7. Tax ID# for recipient of reimbursement _____

8. Conservation Measures Implemented:
   Physical Improvement(s): _____
9. Field Visit Date: _____ SSJID Representative: _____
10. Conservation Measure Implemented According to Applicable Standards? ___ Yes ___ No
11. Summary of Recommended Cost Share Reimbursements

Conservation Measure	Recommended Reimbursement	
	$ per Field	$ per Acre
Delivery Measurement for Pumped Deliveries	$_____	
Conversion from Flood to Sprinkler or Drip Irrigation	$_____	$_____
Drainage Relief	$_____	$_____

TOTAL RECOMMENDED REIMBURSEMENT FOR FIELD $_____

Approved By Program Manager: _____ Date _____

Appendix C: Sample Field Visit Record

Date: _____

FIELD VISIT RECORD

1. Date _____ SSJID Representative: _____
2. Applicant _____
3. Assessor's Parcel Number (APN) _____
4. SSJID Delivery Location (example: "Lat. Wc, St. 120") _____
5. Conservation Measures Implemented:

   Physical Improvement(s): _____

   Management Practice(s): _____
6. Purpose of Field Visit: Verify Implementation to Standards _____ Other (explain): _____

_____

_____

7. Conservation Measure Implemented According to Applicable Standards? ___ Yes ___ No

List applicable standards, and deficiencies, as applicable: _____

_____

_____

_____

_____

_____

CHECKLIST

___ Sketch of Field Layout (include field boundary, delivery point, wells, irrigation system components, drainage outlets, etc.)

___ Photographs (include crop, delivery location, wells, irrigation system components, drainage outlets, etc.)

___ Specific materials listed in grower cost documentation. Verify presence of components, including pump mfr. and capacity, pipe materials and dimensions, filters, etc. (as applicable)

ON-FARM WATER CONSERVATION PROGRAM
2014 PROGRAM DESCRIPTION

SOUTH SAN JOAQUIN IRRIGATION DISTRICT

Table of Contents

SOUTH SAN JOAQUIN IRRIGATION DISTRICT 1
Table of Contents 1
Background and Objectives 2
Enrollment Process 3
Solicitation and Application Process 3
Eligibility Requirements 3
Selection Process 4
Conservation Measures 5
Physical Improvements 5
Delivery Measurement for Pumped Deliveries 5
Conversion from Flood to Sprinkler or Drip/Micro Irrigation 7
Drainage Relief Option 8
Management Practices 9
Scientific Irrigation Scheduling & Soil Moisture Monitoring 9
District Services 10
Valve Packing 10
Maximum Cost Share Payment per Grower 10
Interaction with Other, Non-District Programs 11
Budget Tracking 11
Payment Approval and Processing 12
Monitoring and Verification 12
APPENDIX A: Application for Program Participation A-1
APPENDIX B: Applicable NRCS Conservation Practice Standards B-1
APPENDIX C: Consent to South San Joaquin Irrigation District's Entry of Property to Read and Owner's Agreement to Maintain Flow Meter C-1

Background and Objectives

In the early 1900's, the South San Joaquin Irrigation District's system was built for flood irrigation. Over the years, the practices of growers have changed as they work to conserve water and to improve crop yields with the installation of more efficient irrigation systems and implementation of advanced farming practices. In recognition of the farmers' efforts, and to comply with State law regarding agricultural water use, SSJID provides financial incentives to accelerate improvements to the existing distribution system, enhance farm irrigation practices and provide for measurement of water usage. The intent of this Program is to engage as many growers as possible.

SSJID has developed an on-farm water conservation program (Program) to promote and incentivize on-farm physical improvements, irrigation management practices and water measurement (together referred to as Conservation Measures) that promote water conservation. From a Program perspective, water conservation is defined as use of less water to accomplish the same purpose by encouraging the efficient use of District surface water to meet crop water requirements.

SSJID's goal is to ensure that water is being used efficiently and that it is being put to beneficial use. The District has implemented the on-farm water conservation program in order to work together to achieve the shared water management goals of the growers and the District. The Program also supports ongoing efforts to preserve existing water rights and to comply with current and emerging regulations.

This Program helps the District satisfy the new regulatory requirements of California Senate Bill SBx 7-7, which took effect January 1, 2010 and mandates measurement of individual farm deliveries and implementation of Efficient Water Management Practices (EWMPs) including both District and on-farm improvements. Additionally, it is anticipated that this Program will enhance the control of available surface water and groundwater supplies while promoting improved crop production within SSJID. This program, along with other initiatives the District is evaluating, will provide improved farm delivery measurement and support compliance with SBx 7-7.

A focused set of conservation measures have been included in the Program. In future years, additional conservation measures may be added based on experience with the Program.

Cost shares made available by the Program have been approved for the 2014 growing season. This document provides a detailed description of the 2014 Program to be implemented in November 2013. Cost share offerings for implementation of conservation measures for 2015 will be the subject of future Board decision. For the 2014 Program, participants will be eligible for cost share payments for conservation measures implemented after the Program start date of Monday, November 12, 2013. Applications will be available and accepted on the start date.

Enrollment Process

Solicitation and Application Process

The program will be launched in November 2013 through an announcement on the SSJID web site and through the SSJID Newsletter mailed to SSJID water users.

Growers are invited to submit applications for one or more fields (Appendix A). For each field, the grower will select one or more conservation measures for implementation from a pre-approved list. Fields will be selected by the District for implementation individually from each application provided that they are complete, pass minimum eligibility requirements, and provided that funding is available, as described in the following sections. Additionally, for some conservation measures (conversion from flood to sprinkler or drip/micro irrigation) the application will be reviewed to ensure compatibility with the SSJID distribution system and operations. The District reserves the right to restrict the amount of participation by a particular grower or a particular field.

As mentioned above, each application must be complete to be considered for inclusion in the Program. A complete application will have all applicable portions of the application filled in and will include sufficient documentation to support evaluation of the conservation measure by the District.

For additional information, contact Program Manager Julie Vrieling at (209) 249-4675 or email jvrieling@ssjid.com.

Eligibility Requirements

The following eligibility requirements apply to all fields applying to enter the Program.

- Minimum Field Size – The minimum field size for inclusion in the Program is 10 acres, based on the net irrigated acreage of the field. The 10-acre threshold is additionally the acreage above which the recharge fee applies to fields within the District.

  Growers with fields less than 10 acres in size may submit an application. The District will evaluate whether there is sufficient potential for water conservation to be achieved to warrant the administrative time required to include the field in the Program. Proposals to enroll fields less than 10 acres in size will be evaluated on a case by case basis.

- Current SSJID Water User – For a field to be eligible for the Program, it must be or become a current SSJID surface water user as a condition to approval of any funding. For physical improvements, the participant agrees to use SSJID surface water for a period of not less than 5 years.

- Water Charges Current – At the time of enrollment, all of the grower's SSJID water charges must be or become current.

- On-Farm Measurement – For fields entering the Program with pumped deliveries, the participant agrees to install a meter to measure farm deliveries, in accordance with the conservation measure Delivery Measurement for Pumped Deliveries, as described in this document, including any reconfiguration of the pump discharge needed to facilitate accurate measurement while maintaining the pump flow rate. The participant will agree to perform repairs, maintenance, or replacement of water measurement devices as needed to ensure accurate measurement into the future.

  The participant agrees to allow SSJID to periodically record flow rate and delivery amounts using the meter and, at the District's option, to perform repairs, maintenance, or replacement as needed to ensure accurate measurement into the future. Additionally, all participants agree to allow meters to be installed by the District on a case-by-case basis for flood deliveries, if the District determines that site conditions support accurate delivery measurement.

- Satisfactory Performance in Prior Programs – If applicable, applications may be denied due to less than satisfactory performance in prior District programs.

- Cost Share – The District's maximum share of cost will be a set percentage of the participant's implementation cost, with maximums put in place.

- Program Award/Modification – the District will review and select applications for participation in the Program based on its determination of which applications best meet the Program objectives. The District may modify the terms for participation in the Program at any time, but will not reduce its commitment applicable to a particular field after a participant has received notice of approval from the District.

Selection Process

Fields will be considered on a first-come, first-served basis. An application will be considered approved when the District issues written notice of approval to the applicant at the mailing address or e-mail address specified on the application. The terms of approval and the conditions for District payment will be stated in the notice. Fields will be considered for approval until available funds allocated to each conservation measure of the Program are fully committed for each year, based on the assumption that actual reimbursement costs for cost share payments, as described later in this document, will be the maximum allowable payment per field. If after actual payments are made remaining funds are available, additional fields will be considered in the order in which their applications were received.

In order to encourage adoption of a variety of conservation measures, a total budget will be allocated for each conservation measure as described in the Budget Tracking section of this document.

Approved conservation measures must be completed within 1 calendar year of the date of approval to be considered eligible for cost share payments. Requests for reimbursement must be submitted to the District within the 1 year period. Conservation measures started prior to the approval date are not eligible for cost share payments.

Conservation Measures

Conservation measures as described herein are classified as either physical improvements or management practices. Physical improvements include conservation measures involving substantial physical changes to a field. Management practices include collection of information and development of recommendations to aid in improved irrigation management to meet crop water needs.

All measures must be constructed or implemented according to Program standards prior to receiving reimbursement. For physical improvements, all measures must have been inspected and approved by SSJID staff prior to reimbursement. For management practices, payment will be made following the receipt of operational reports (soil moisture monitoring data and/or irrigation scheduling recommendations) under the provision that service provider will provide these data for the full irrigation season for which the field is enrolled in the Program. For both physical improvements and management practices, documentation of costs must be provided to the District's satisfaction prior to reimbursement.

As described in the Background and Overview section of this Program Description, for the 2014 Program, participants will be eligible for cost share payments for conservation measures implemented after the Program start date of November 12, 2013.

Physical Improvements

Delivery Measurement for Pumped Deliveries

Delivery measurement for pumped deliveries consists of installing a flow meter to measure SSJID water deliveries for existing or new pumped SSJID deliveries. In some cases, the existing pump discharge piping may need to be reconfigured to provide an adequate straight section of pipe without bends or other obstructions to allow for accurate flow measurement using a flow meter.

This conservation measure is applicable to any case in which SSJID water is delivered to a pump that pressurizes irrigation water for application via a sprinkler, drip, or micro system. Minimum standards for the measure are:

- Seametrics AG2000 Irrigation Magmeter, McCrometer Ultra Mag flow meter, or approved equal
    - Installed with at least 3 diameters of straight pipe upstream of meter and 2 diameters of straight pipe downstream of meter (see Figure 1)
    - Provided with continuous power supply
    - Equipped with telemetry hardware allowing integration to the District's Supervisory Control and Data Acquisition (SCADA) System
    - Equipped with an internal datalogger[1]
- The participant agrees to perform repairs, maintenance, or replacement of water measurement devices as needed to ensure accurate measurement into the future.
- The participant agrees to allow the District to record delivery flow rates and volumes periodically for the life of the meter and to allow the District, at its option, to perform any repair, maintenance, or replacement, as needed to ensure accurate measurement into the future.
- The land owner must sign an SSJID agricultural Meter Service Agreement (Appendix C) as part of implementation of this conservation measure.
- The participant agrees to allow the District, at its option, to install telemetry, including but not limited to a solar panel, mast, antenna and other necessary equipment to remotely monitor delivery flows using the flow meter.

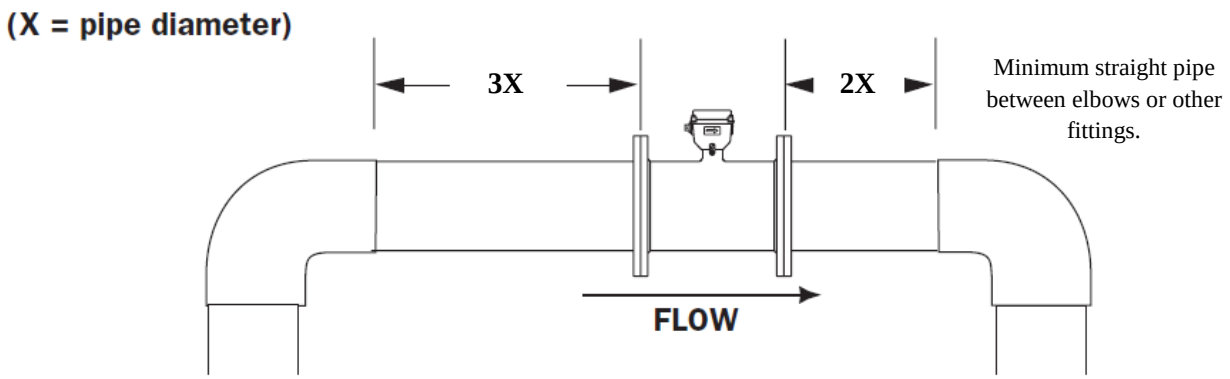

Figure 1. Example Magnetic Flow Meter Installation.

This measure will be included with any participating fields installing a sprinkler or drip irrigation system as described under the following conservation measure. All growers implementing this measure are required to agree to allow the District to read the flow meter periodically for purposes of delivery record keeping for the life of the device.

[1] An external datalogger is required and is subject to approval by SSJID.

The estimated cost for planning purposes is $5,650 per location based on the estimated purchase and installation cost of a 12" mag meter, plus a contingency to allow for re-plumbing of pipe discharge to allow for adequate length of straight pipe to install the meter in some cases.

The District's cost share for delivery measurement of pumped deliveries will be 80% of the actual cost, not to exceed $4,500.

Conversion from Flood to Sprinkler or Drip/Micro Irrigation

Conversion from flood to sprinkler or drip irrigation consists of installing a sprinkler, drip, or microspray irrigation system on an existing field that is currently flood irrigated. The conservation measure includes installation of the pump, filtration, mainlines, laterals, and emitters for the system. Adoption of this conservation measure additionally includes and requires installation of an SSJID approved sump to allow for pumping of canal water along with adoption of the conservation measure Delivery Measurement for Pumped Deliveries, described previously.

Conversion from flood to sprinkler or drip irrigation is generally applicable throughout SSJID, except where delivery system physical and operational constraints limit the District's ability to meet the delivery needs of sprinkler or drip/micro systems. Although the primary crops currently irrigated using sprinkler or drip irrigation are trees and vines, this conservation measure could also apply to the installation of a sprinkler system to irrigate pasture or field crops, for example. **Applications for conversion to sprinkler or drip/micro irrigation will be evaluated on a case by case basis to determine whether the District can continue to provide canal water to meet crop water needs following irrigation system conversion. Only fields located such that the District can supply surface water at the flow rate and irrigation intervals required after conversion will be approved.**

Minimum standards for this measure have been identified based on the NRCS Conservation Practice Standards listed in Table 1, below. These standards are included in Appendix B of this document.

Table 1. NRCS Conservation Practice Standards Applicable to Conversion from Flood to Sprinkler or Drip Irrigation.

NRCS Conservation Practice Standard	Applies to Conversion from Flood to:	
	Sprinkler	Drip or Micro
Irrigation System, Sprinkler (442)	✓	
Irrigation System, Microirrigation (441)		✓

Pumping Plant (533)	✓	✓
Irrigation Pipeline (430)	✓	✓

Additionally, the following requirements developed by SSJID shall apply:

- No filters may back flush to District pipelines or open canals
- Each system must be designed by an Irrigation Association Certified Irrigation Designer
- Design Distribution Uniformity must be at least 75% for sprinkler systems and at least 90% for drip or micro systems
- Participants are responsible for submitting an Application for Structure Permit and constructing a District-approved sump prior to receiving reimbursement for system installation costs under this conservation measure.

The estimated cost for conversion from flood to sprinkler or drip/micro for planning purposes is $1,650 per cropped acre based on estimated materials and installation costs of a complete system including pump, filtration, mainlines, laterals, and emitters. The estimated costs are based on discussion with local irrigation suppliers and review of NRCS EQIP cost estimates. Sump costs are considered inclusive to the irrigation system and will be reimbursed through this Conversion conservation measure. Reimbursement for flow meter costs will be made separately under the Program based on the Delivery Measurement for Pumped Deliveries conservation measure, described previously.

The District's cost share for conversion from flood to sprinkler or drip irrigation will be 50% of the actual cost, not to exceed $825 per cropped acre. Additionally, the cost share payment will be limited to a maximum of $25,000 per grower for each measure. As described, this cost share does not include delivery measurement for pumped deliveries, which will be treated separately.

Drainage Relief Option

This conservation measure includes tailwater recovery systems, land leveling, and the modifying of discharge valves.

Tailwater Recovery Systems to Prevent Runoff consist of systems to collect and convey tailwater to the head of the field from which the tailwater was generated or another nearby field for the purpose of recovering and reapplying the tailwater to supplement irrigation deliveries. For this Program, tailwater recovery systems are targeted at fields that periodically drain tailwater back into the SSJID distribution system where it currently is delivered to a downstream user or spills from the system. SSJID discourages and in the future may no longer allow drainage of tailwater into the distribution system. This conservation measure applies to any field for which tailwater is produced during irrigation that drains back to the SSJID irrigation system. It is anticipated that this only occurs for flood irrigated fields.

Minimum standards for tailwater recovery systems have been identified based on the NRCS Conservation Practice Standards for Irrigation System, Tailwater Recovery (447), Pumping Plant (533), and Irrigation Pipeline (430), included in Appendix B of this document.

The estimated cost of tailwater recovery systems for planning purposes is $1,200 per cropped acre based on estimated materials and installation costs of a complete system including tailwater pond, tailwater return pipeline, and pump. The estimated costs are based on estimated quantities and unit costs for system components and based on review of NRCS EQIP cost estimates.

The District will also consider laser land leveling, deep ripping, as well as the modification of discharge valves to reduce drainage into the SSJID distribution system. Minimum standards for laser land leveling and deep ripping have been identified based on the NRCS Conservation Practice Standards for Irrigation System, Precision Land Forming (462), Irrigation Land Leveling (464), Land Smoothing (466) and Deep Tillage (324), included in Appendix B of this document.

The District's cost share for drainage relief options will be 50% of the actual cost, not to exceed $600 per cropped acre. Additionally, the cost share payment will be limited to a maximum of $10,000 per grower for this measure.

Management Practices

Scientific Irrigation Scheduling & Soil Moisture Monitoring

Scientific Irrigation Scheduling consists of the determination of the frequency, rate, and duration of irrigation application needed to meet crop water requirements while minimizing excess tailwater and deep percolation. Typically, this determination is based on a combination of soil moisture monitoring and root zone water balance calculations based on estimates of crop water use (evapotranspiration, or ET). Scientific irrigation scheduling is applicable to all irrigated crops, regardless of irrigation system type or soil conditions.

In most cases, the optimum frequency, rate, and/or duration of irrigation is constrained by available water supply, the delivery system, the soil, or the irrigation system itself. In the case of SSJID, the delivery frequency and flow rate are generally fixed under current system operation, providing flexibility almost exclusively in the duration of irrigation.

Soil Moisture Monitoring consists of tracking the moisture content of the crop root zone over the course of the growing season to evaluate whether irrigation practices are sufficient to maintain adequate soil moisture content while limiting excess deep percolation. Soil moisture monitoring is a key component of scientific irrigation scheduling and is applicable to all irrigated crops, regardless of irrigation system type or soil conditions. For the Program soil moisture monitoring is offered to assist growers in tracking soil water content, or it may be implemented as part of scientific irrigation scheduling, described previously.

Under the Program, the District requires that scientific irrigation scheduling and soil moisture monitoring be conducted by approved service providers using proven technologies. Additionally, the District requires that irrigation recommendations and/or duplicate soil moisture monitoring reports be submitted to both the participating grower and to the District by the service provider. To request a list of preapproved service providers, contact Julie Vrieling at (209) 249-4675 or email jvrieling@ssjid.com.

The estimated cost of scientific irrigation scheduling for planning purposes is $3,000 per field per season. The estimated cost of soil moisture monitoring for planning purposes is $1,500 per field per season. These costs represent the average seasonal cost for a consulting service to provide irrigation recommendations or provide soil moisture monitoring reports for an individual field based on discussion with consultants serving the San Joaquin Valley. The difference in cost between consultants depends largely on whether continuously recording soil moisture monitoring equipment is installed in the field; costs will likely be substantially less for weekly field visits using portable soil moisture monitoring equipment.

Unlike physical improvements, the District will pay a portion of the total cost of the scientific irrigation scheduling service and/or soil moisture monitoring service directly to the service provider. The portion that the District is willing to pay will be a one-time payment of 50% of the actual cost, not to exceed $1,125 per field. The maximum payment for Scientific Irrigation Scheduling and/or Soil Moisture Monitoring will be limited to $2,500 per grower.

District Services

Valve Packing

Valve packing is a service that was traditionally provided by the District to repack irrigation valves to reduce valve leakage. Valve packing is applicable wherever large flood irrigation valves installed on District pipelines are used. Growers are to make arrangements to have their valves packed by contacting Julie Vrieling at (209) 249-4675 or e-mail jvrieling@ssjid.com. District staff will repack the valves. Valves will be packed according to manufacturer specifications, if applicable.

Growers will be charged a fee for valve packing to cover District labor and materials costs for repacking the valves. Additionally, the grower is responsible for the removal and reinstallation of the valve, as well as delivery to and pickup from the District. The District may restrict the availability of this service depending on the availability of personnel.

Maximum Cost Share Payment per Grower

In addition to the payment limitations described previously for each conservation measure, the total cost share for 2014 for all fields enrolled by a grower will be limited to $25,000.

Interaction with Other, Non-District Programs

Other Programs may provide cost share payments for implementing conservation measures included in this Program. For example, programs offered by the Natural Resources Conservation Service of the USDA, such as the Environmental Quality Incentives Program (EQIP), offer cost share of 50% (or more in some cases) to cover the cost of installing sprinkler systems, drip/micro systems, tailwater recovery systems, or other on-farm improvements.

Participation in the SSJID On-Farm Water Conservation Program does not prevent growers from participating in EQIP or other Federal programs. Similarly, participation in EQIP or other Federal programs does not prevent participation in the SSJID On-Farm Water Conservation Program.

Budget Tracking

The total budget for cost share payments is $738,000 for 2014. Initially, cost share amounts will be allocated for each conservation measure as described in Table 2.

Table 2. Initial 2014 Budget Amounts by Conservation Measure Category.

Conservation Measure Category	2014 Budget by Conservation Measure
Physical Improvements	
Delivery Measurement for Pumped Deliveries	$ 63,000
Conversion from Flood to Sprinkler or Drip/Micro	$ 500,000
Drainage Relief	$ 125,000
Management Practices	
Scientific Irrigation Scheduling & Soil Moisture Monitoring	$ 50,000
TOTAL	$ 738,000

The budget amounts will be reviewed periodically and may be adjusted based on the number of applications received for each conservation measure at the discretion of the Program Manager.

As applications for participation are received, they will be added to a list in the order they are received. At any given time, the applications subject to review and approval will be limited to those for which the total potential cost share is less than the total available budget by conservation measure category. If upon review, the District does not approve an application, the associated cost share will be released to fund applications received later within that category. As documentation of actual costs is received by the District from participating growers, the

difference between the cost share limit and the actual cost share amount paid for each category, if any, will likewise be released to fund applications received later in the order in which they were received.

Payment Approval and Processing

Upon receipt of a request for payment and documentation showing actual payment of the incurred conservation measure implementation costs from an approved applicant, the District will verify that the measure has been implemented (as described in the following section) and payment will be issued based on the Program cost share percentage for the measure or measures implemented and based on the actual cost, not to exceed the cost share limit for the measure or measures.

Requests for reimbursement must be accompanied by documentation of implementation costs, including invoices and receipts from equipment and service providers, along with proof of payment. Costs incurred by the grower internal to his or her operation that are associated with the installation of the conservation measure are not considered eligible for reimbursement.

Payments will be issued as a separate check to the participating grower, rather than as a reduction in water charges. It is anticipated that payment will be made within 30 days of the District's verification that the measure was implemented.

Monitoring and Verification

Monitoring and verification of implementation of conservation measures will be accomplished through a combination of documentation of implementation costs (receipts and payments) and operational reports (flow measurement records, soil moisture monitoring reports, and irrigation recommendations), along with field visits to verify that physical improvements are implemented according to Program standards. Additionally, the District will seek feedback from participating growers in the form of interviews or questionnaires with the objective of evaluating the Program and documenting changes to irrigation practices resulting from conservation measure implementation.

APPENDIX A: Application for Program Participation

For District Use Only

Date Received: _____

APPLICATION FOR ON-FARM WATER CONSERVATION PROGRAM

1. Applicant/Landowner name _____ email _____
2. Mailing address _____
3. Telephone # _____

Complete one application for each field to be included in the Program. All measures must be implemented after the application approval date and completed within 1 year to be eligible for reimbursement.

SUBMIT COMPLETED APPLICATION TO SSJID

1. A detailed design plan and cost estimate must be submitted with applications including physical improvements to a field.
2. Your application will be reviewed and processed according to District policy and as described in the Program Description. A determination will be made as to the eligibility and potential effectiveness of the proposed conservation measure or measures for each field, and a recommendation will be made to the General Manager, Jeff Shields.
3. Following review, you will be sent a letter or e-mail summarizing the conservation measures approved for implementation for each field application and providing explanation of why any fields or conservation measures were not approved, if applicable.
4. **COST SHARE PAYMENTS ARE NOT GUARANTEED UNTIL YOUR APPLICATION HAS BEEN APPROVED.**
5. If you have any questions concerning your Application please feel free to contact Julie Vrieling at (209) 249-4675 or email jvrieling@ssjid.com.
6. By signing below, you agree to implement the conservation measures described in this application and to abide by all Program requirements as described in the Program Description.

APPLICANT/LANDOWNER SIGNATURE _____

DATE _____

APPLICATION FOR ON-FARM WATER CONSERVATION PROGRAM (CONTINUED)

BASIC INFORMATION

1. Applicant/Landowner name _____
2. Assessor's Parcel Number (APN) _____
3. SSJID Delivery Location (example: Lat. Wc, St. 120) _____
4. Field size[1] (acres) _____ 6. Crop _____

PROPOSED PHYSICAL IMPROVEMENTS

1. Delivery Measurement for Pumped Deliveries _____
2. Conversion from Flood to Sprinkler or Drip/Micro Irrigation[2] _____
3. Drainage Relief Option _____

PROPOSED MANAGEMENT IMPROVEMENTS

1. Scientific Irrigation Scheduling and/or Soil Moisture Monitoring _____

Have you applied for funding for these conservation measures under any other programs, such as NRCS EQIP? Yes ___ No ___

APPLICANT/LANDOWNER SIGNATURE _____ DATE _____

Preferred method of contact: E-mail _____ Postal Mail _____

---

[1] Fields less than 10 acres in size will be considered for participation on a case-by-case basis based on the potential to achieve water conservation as described in the Program Description.

[2] Conversion from flood to sprinkler or drip/micro must include the delivery measurement for pumped deliveries conservation measure.

APPENDIX B: Applicable NRCS Conservation Practice Standards

The following NRCS Conservation Practice Standards are attached:

1. Irrigation System, Sprinkler (442)
2. Irrigation System, Microirrigation (441)
3. Pumping Plant (533)
4. Irrigation Pipeline (430)
5. Irrigation System, Tailwater Recovery (447)
6. Precision Land Forming (462)
7. Irrigation Land Leveling (464)
8. Land Smoothing (466)
9. Deep Tillage (324)

APPENDIX C: Consent to South San Joaquin Irrigation District's Entry of Property to Read and Owner's Agreement to Maintain Flow Meter

AFTER RECORDING RETURN TO:

SOUTH SAN JOAQUIN IRRIGATION DISTRICT
P.O. Box 747
Ripon, CA 95366

CONSENT TO
SOUTH SAN JOAQUIN IRRIGATION DISTRICT'S
ENTRY OF PROPERTY TO READ
AND OWNER'S AGREEMENT TO MAINTAIN FLOW METER

The undersigned owner of the property _____, located at _____, APN _____("Property") and further described in the attached Exhibit "A", has, with the financial assistance of South San Joaquin Irrigation District ("District"), installed a flow meter to measure deliveries of District surface water to the Property. The District will use flow meter measurements to implement state law that requires the District to base its water charges, at least in part, on the quantity of water it delivers.

Owner consents to the entry of District officers, employees or agents ("District Personnel") on the Property for the purposes of inspecting and reading the flow meter installed to measure deliveries of District surface water to the Property. District Personnel may enter the Property at any reasonable hour and on a monthly basis or at such other time as District reasonably determines to be necessary, to inspect the working condition of the meter and to record water usage. District shall also be permitted to enter the Property for the purpose of installing telemetry control hardware to the meter such that the meter can be read remotely. District Personnel may enter the Property outside any District easement area using marked District vehicles on available access roads, on foot or as Owner and District may otherwise agree. District shall use reasonable care to avoid interfering with Owner's farming operations.

Owner agrees to take no action that would prevent the meter from accurately measuring the volume of District surface water delivered to Owner's Property. If District determines that the meter is nonfunctioning, Owner agrees to repair or replace the meter at Owner's expense.

This Consent shall remain in effect until such time as deliveries of District surface water to the Property shall terminate as evidenced by recordation of an Irrigation Service Abandonment Agreement signed by District and Owner or Owner's success or in interest.

This Consent shall run with the land described above and be binding on Owner and Owners' heirs, successor and assigns.

SOUTH SAN JOAQUIN IRRIGATION DISTRICT

"DISTRICT"

By_____ Date:_____ By_____ Date:_____

Ralph Roos, President Jeff Shields, Secretary

Board of Directors Board of Directors

"OWNER(S)"

By_____ Date:_____ By_____ Date:_____

Mailing Address: _____

_____

Phone Number:_____

SIGNATURES MUST BE NOTARIZED AND BE PER RECORDED DEED