# ATTACHMENT 3 – WORK PLAN

# APPENDIX H

# Preliminary Design Concepts and Approach for Completion of Offsite Pipeline Design for the Water Conservation Plant Upgrade Project, Provost and Pritchard Consulting Group, February 2010

EST. 1968
PROVOST & PRITCHARD CONSULTING GROUP
An Employee Owned Company

WATER & WASTEWATER
MUNICIPAL INFRASTRUCTURE
LAND DEVELOPMENT
AGRICULTURE SERVICES
DAIRY SERVICES
LAND SURVEYING & GIS
PLANNING & ENVIRONMENTAL
DISTRICT MANAGEMENT

FRESNO • CLOVIS • VISALIA • BAKERSFIELD • OAKDALE

130 N. GARDEN ST.
VISALIA, CA 93291
(559) 636-1166 • FAX (559) 636-1177
WWW.PPENG.COM

**Technical Memorandum**

February 24, 2010
Parsons Water and Infrastructure, Inc.
100 West Walnut Street
Pasadena, California, 91124

Attention: Mr. Paul Skager

**Subject: Preliminary Design Concepts and Approach for Completion of Offsite Pipeline Design for the Water Conservation Plant Upgrade Project**

## Introduction

This Technical Memorandum outlines the preliminary design and pipeline alignments for the pipeline system for disposal and reuse of treated effluent from Visalia's Water Conservation Plant. This system includes the Basin #4 pipeline, the Tulare Irrigation District pipeline and the irrigation pipelines serving City farmland south of the Water Conservation Plant, (WCP) and associated farmland, golf course and parks under City influence or control east of Highway 99.

The proposed system will deliver tertiary treated effluent from the WCP to all users and basins. The Basin #4 pipeline is designed as a gravity pipeline. The TID pipeline systems is also designed as gravity pipelines and includes a regulating basin at constructed at the upstream end just south of the WCP. The irrigation pipelines to the east and serving 250 acres of farmland south of the WCP will operate at low head for the first phase. The easterly pipeline system will be designed so that it can expand in capacity with increased system pressures with a second future regulating basin east of Highway 99.

An existing onsite concrete lined reservoir will become available because of proposed conversion from chlorine disinfection to UV disinfection with the upgrade to the WCP. This concrete lined reservoir will be connected to a proposed regulating reservoir. The concrete lined reservoir will function as the forebay for a proposed pump station. The pump station for

the first phase will deliver irrigation water at low pressure to farmland south of the WCP and to farmland, Plaza Park, and Valley Oaks Golf Course located east of the WCP. In the future this pump station will potentially be upgraded to a larger high pressure pump station that could delivery up to twice the flow to a second regulating reservoir east of Highway 99. This is discussed in more detail under the "Irrigation Delivery Pipelines for Areas East of Highway 99 and Immediately South of the WCP" section of this memorandum.

**Basin Capacity**

Onsite Basin #2 & Basin #3 and offsite Basin #4 are available to dispose of effluent when, and if there are no places to put effluent from the WCP at any given time. Please see Exhibit B, the Water Balance Summary flow chart with "no flow" to other than City owned basins. This chart shows that of the 24,643 acre-feet of effluent generated annually, there is 696 acre feet of effluent that cannot be delivered. Exhibits C and Exhibit D also show this information in graphic format. This potential non-delivered effluent happens during the rainy season at the design flow of 22 MGD. This is a relatively small amount and would point to the need for a slight increase in basin area for infiltration purposes. However there are several additional things to consider before a recommendation for additional basin capacity is proposed.

There is adequate City owned land area adjacent to the WCP that is presently in agriculture. Additional basin area could be quickly converted when the need arises. The area needed is going to be 40 acres, additional, or less, based on a 3% annual deficiency or a 10% monthly deficiency in area.

The short term infiltration rates measured by Kleinfelder were more than five time greater than the design infiltration rates. Design infiltration rates recommended by Kleinfelder and derived from the measured rates with consideration of soil conditions and groundwater conditions. These values are considered ongoing long term rates. For intermittent use of the basins, infiltration rates are expected to be much higher. The calculations done for Exhibits B, C, and D take into account the lower design infiltration rates recommended by Kleinfelder, as well as, precipitation rates and evapotranspiration rates for the area. The design infiltration rates recommended by Kleinfelder are likely to be determined to be conservative numbers on the low side. It has therefore been suggested that the City track flows into these ponds and observe more directly the actual infiltration rates. This will allow the calculated infiltration rates to be better understood before an expansion of basin area is proposed.

**Pipeline System from the Water Conservation Plant to Basin # 4.**

Each of the three basins discussed above could on occasion potentially be required to take all of the flow from the WCP. With this in mind, the pipeline from the WCP to Basin #4 will be

required to deliver up to 52 Million Gallons per Day, MGD, (26 MGD with a 2.0 Peaking Factor) This will accommodate the expected ultimate peak flow. The design will provide the ability to bypass all re-use facilities and flow directly by pipeline to the ditch that conveys water to Basin # 4. A 60 inch diameter gravity pipeline is proposed for this purpose. The ditch downstream of the pipeline connection point continues on to Basin #4. The flow capacity in this ditch has adequate capacity where it has been checked. However, additional survey work and flow analysis is proposed to confirm adequate fall and cross section in the ditch to accommodate ultimate peak flow to Basin # 4, as the final design is being done.

The 60 inch diameter pipeline to Basin #4 will flow from the WCP to the beginning of a westerly flowing ditch located just downstream of that ditch's take-off point from Mill Creek. See the attached Exhibit A - "Water Conservation Plant Reuse Pipeline System" for this discharge pipeline route. At the design flow of 52 MGD the pipeline hydraulic elevation at the discharge into the ditch will be 276.2 feet. This is about three feet above the estimate water level required in the ditch to carry this flow downstream, so flow will not be restricted at this connection point. Please refer to Exhibit G-1 for hydraulic calculations for this pipeline. The ditch beyond the discharge point will carry flow downstream to Basin #4 at an estimated depth of less than 2.5 feet with freeboard of more than 2.5 feet. This provides adequate capacity in the ditch at this point. Capacity will need to be verified at points further downstream to confirm capacity all the way to Basin #4. The invert of the pipe at this discharge point will be submerged deep enough to assure the pipe flows full. The existing Mill Creek turnout of the Basin #4 Ditch just upstream of the pipe discharge point will need to be modified, so that the design peak flow of 52 MGD will not back up into Mill Creek. The ditch will be evaluated to insure this back up does not occur and to determine the levels of scour and silt build up at the inlet to the ditch. More detailed survey information is required, before we chose the best option for this inlet point.

**Tulare Irrigation District (TID) Delivery Pipeline.**

Irrigation water delivery flow to the south, into Tulare Irrigation District (TID) boundaries, will peak at 33 MGD (22 MGD with a 1.5 Peaking Factor) This volume of water can be delivered by gravity also with a 60 inch diameter pipeline with a regulating reservoir at the upstream end located just south of the WCP. Please see Exhibit G-2 for hydraulic calculation details. The pipeline will deliver water to the TID ditch connection point at a hydraulic grade of 274.8 feet elevation. This is 1.3 feet higher than the water depth at the connection point in the ditch at the design flow of 33 MGD.

The land area of the proposed regulating basin is about 17 acres with an overall basin water volume of 40 acre-feet. The regulating basin will allow for smoothing of variations in flow from

the Water Conservation Plant and allow for reliable delivery of downstream flow. The difference in flow upstream versus downstream may mismatch by as much as 20% on a daily basis. Please see Exhibits I, I-1, I-2, I-3, and I-4 as well as Exhibits J, J-1, J-2, J-3, J-4 for details regarding how the proposed 40 acre regulating basin is estimated to function with this 20% overage and underage of flow in and out of the basin. As can be seen with the water level set at 20 acre feet of storage at the beginning of a 24 hour cycle, the volume reaches a high of 39.9 acres-feet on the high side as seen in Exhibit J and reaches a low volume of 5.1 acre-feet on the low side as seen in Exhibit I. The calculations are based on WCP flow records for several days in July, August, September and October of 2009, where average flows for each hour in a twenty-four hour cycle were determined. These hourly flow variations were then prorated up to the ultimate design flow of 26 MGD.

The top banks of the 40 acre-feet regulating basin will be slightly higher than the onsite WCP grades. The bottom of the basin will be approximately 2 feet below natural grade. This will allow the basin banks to be built with onsite materials. The natural ground at the proposed regulating basin site is at elevation 284 feet. It is proposed that the bottom of the basin be at 282 feet elevation and the top of bank be at approximately 292 feet elevation. During operations water levels will vary between 288 feet to 284 feet. However, the plant can deliver water at 290 feet elevation which would still give 2 feet of protective freeboard in the basin.

The bottom of the basin is proposed to be compacted to retard percolation which will help maximize delivery of re-use water. From discussions with Mr. David Pearson of Kleinfelder, compaction effort on the bottom of the proposed regulating basin with this soil type, will have a significant retarding effect on infiltration rates. He does not recommend a liner for this application. If sand pockets are exposed while constructing the basin, Mr. Pearson suggests, there will need to be extra effort in mixing soils on the bottom, but he still feels with this soil type, a liner can and should be avoided.

Water being delivered to TID will utilize that portion of the Basin #4 pipeline described above that runs westerly from the plant and then southerly paralleling Road 68. At the point where the Basin #4 pipeline turns to the west, a gated junction box is proposed to allow water to either go west to Basin #4 or to continue to the south in a 60 inch diameter pipeline for delivery to TID. The southerly 60 inch diameter TID pipeline extension parallels Road 68 continuing south and discharges into a westerly flowing ditch that crosses Road 68 at Avenue 268. This ditch is owned by TID and will carry the design flows westerly to TID Basin #3 and other facilities and farmland within the District for irrigation purposes. All of the water delivered at this point will be delivered to farmland or will go into basins that will retain the re-use surface water within Tulare Irrigation District boundaries. None of the ditches and basins in this area of the

District can flow to “Waters of the US”. However, in the design of this delivery system measures will need to be taken to assure that no backup of water or cross connections will occur.

The westerly flowing ditch that crosses Road 68 at Avenue 268 has adequate capacity to accept the flow from the proposed TID pipeline, but the ditch is proposed to be lowered in grade downstream of the connection point to reduce silt build up and to guard against back up of flow at high flows in the TID system. There is a turnout about 3000 feet east of the Road 68 and Avenue 268 intersection that allows water from Packwood Creek to enter this westerly flowing ditch. Because the grades in this area are relatively flat more detailed survey and flow evaluations will need to be done during the final design of this inlet point to assure that “Waters of the US” are not compromised.

A flow meter with ability to communicate with a recorder at the WCP is proposed in the vicinity of the inlet to the ditch at Road 68 and Avenue 268. This will allow the City and TID to track delivery quantities that will determine the volumes of TID waters that will be provided to the City in exchange for the re-use water.

It is expected that a new inlet structure will replace the existing structure at the tie-in point at the southwest corner of the Road 68 and Avenue 268. This will likely be built by TID or be under TID control.

**Irrigation Delivery Pipelines for Areas East of Highway 99 and Immediately South of the WCP**

The peak delivery flow of 12 MGD for irrigation water to the east side of Highway 99 is proposed to be delivered in a 36 inch diameter pipeline. The pipeline will be designed for a higher pressure rating to accommodate future high pressure use. The high pressure pipeline will allow future phases that upgrade the system to carry approximately double the anticipated flow through the 36 inch diameter pipe. Higher pressure and velocity with allow for delivery of flow to a future second regulating basin east of Highway 99. Water for re-use could then be pumped from the basin into the re-use delivery pipelines and future easterly extensions of the re-use pipeline system.

Irrigation water delivery to 250 acres of farmland south of the WCP would continue at 2000 GPM peak flow or slightly more if required. This will be in a separate, slightly higher pressure line connected to the existing 18 inch diameter pipeline presently being used for delivery of secondary treated effluent.

Please see Exhibit E, the Water Balance Summary for the 22 MGD Design flows at the WCP. This flow chart summarizes the land areas being served, the annual acre-feet of use by each

land use and the expected peak flows for each use. TID is estimated to use 64% of the annual re-use water generated at the WCP. Farmland, park and golf course are estimated to use 23% of the water generated at the WCP. The remaining 13% of the reuse water generated will go to City owned Basin #4 and other basins adjacent to the WCP. This estimate is based on the assumption that the farmland, park and golf course will receive re-use water first and will use the maximum amount they can from the plant. The remainder of the water will go to TID, unless they cannot use it, in which case the water will go to the City owned basins. The 13% remaining reuse water will go to City basins, because there is little demand for the water between November and February, other than for storage and recharge purposes. See Exhibit F which is a graph of Month By Month Volumes of Effluent Re-use for each land use category.

This irrigation delivery system will provide "flood irrigate" water at low head to farmland south of the WCP and easterly farmland, as well as deliver water to ponds at Plaza Park and the golf course. It is estimated that 8500 GPM peak flow will be required. The water will be provided at low head (15 to 20 psig) using 36 inch diameter pipe. See Exhibit G-3 for hydraulic calculations of this system. The most northerly point of the first phase will end at the Plaza Park delivery point. The first phase will also stop at the most easterly first phase delivery point in Walnut Avenue.

The hydraulic analysis shown in Exhibit G-3 starts at the pump station at the WCP and continues easterly crossing Highway 99 and through all easterly delivery points along the pipeline route to Highway 198 and Kelsey. The last section of this system between Plaza Park Pond and Highway 198 is proposed for a future phase, but was calculated to show that this pipeline can be extended in a future phase.

In addition there is a proposed 36 inch diameter pipeline extending east in Walnut Avenue. This pipeline will provide water supply to the most easterly farmland south of Walnut Avenue. The pipeline is oversized for the farmland supply needed for phase 1 and could be smaller. However, this size is proposed to allow for future extensions to the east and to allow for a second regulating basin to be placed in this area. The over-sizing of this section of pipeline can be justified, because it will allow the system to potentially double its delivery capacity in the future without having to replace the pipeline in Walnut Avenue. The hydraulic analysis for this pipeline is left for a future phase, because there are too many unknowns regarding regulating basin placement and future flow requirements. However, the proposed 36 inch diameter from the plant to the east at a reasonable design velocity of 5 feet per second for pressure pipe, has a calculated flow of 22.8 MGD. For the first phase the pipeline in Walnut Avenue will have almost no head loss and will operate at a low velocity.

A separate higher pressure pump installed at the pump station is proposed to serve the 250 acres of farmland south of the WCP. This area is currently served by an existing 18 inch diameter PVC pipeline. The plant operators stated this system will need more than the minimum low head pressures required for the remainder of the system. Further investigation will be done to verify that a separate pressure zone will be required. In addition the plant operators wish to plan for a future extension of pipelines to serve the full 900 acres of City owned farmland that may connect to the system in the future.

The ponds at Plaza Park and Valley Oaks Golf Course were checked for capacity to deliver average flows through a 24 hour period and allow for peak flows at night to be pumped out of the pond system. See attached spreadsheets in Exhibits K, K-1, K-2, K-3, and K-4 which show this information. The analysis indicates the drop from high water to low water for the 18 hole portion of the golf course is 10.4 inches, the drop from high water to low water for the 9 hole portion of the golf course is 5.4 inches, and the drop from high water to low water for the Plaza Park Pond is 9.7 inches. These are all within acceptable tolerances. Assumed in this analysis, that will need confirmation, are that the system of ponds for the 18 hole course and the system of ponds for the 9 hole course are connected together with adequate sized connecting pipes to keep the ponds at relatively the same level during peak pumping periods. The golf course system designer has indicated he thinks the tie-in piping is adequate, but this will need to be verified as the final design is completed.

A pond level measuring system that communicates pond levels to operators at the treatment plant will be installed to assure that system flow adjustments can be made in a timely manner. This will provide added protection from overflow of the ponds at the golf course and the park and keep any re-use water from flowing into creeks and ditch going through the area. In addition, to guard against low flow conditions in the system, the existing deep wells will remain in service and be available as supplemental backup or when re-use water is not available.

Originally the first phase was going to include irrigation water to the Highway 99/198 Interchange area. This will take a separate pipeline at sprinkler system pressures. The system can be designed and constructed if and when Caltrans expresses more interest in re-use water.

**Opinion of Probable Costs**

See attached Exhibit H, the Opinion of Probable Costs for the three systems discussed above. The costs are summarized here as follows:

1. WCP to Basin #4 Pipeline $2,299,499
2. TID Pipeline $3,311,445

| | | |
|---|---|---|
| 3. | Reuse Irrigation Pipelines | $4,769,209 |
| | Subtotal | $10,380,153 |
| | Administration & Engineering (20%) | $2,076,031 |
| | Contingency Amount (20%) | $2,076,031 |
| | Total Project Costs | $14,532,214 |

We appreciate the opportunity to serve your need on this project. If you have questions or need additional information please contact me.

Respectfully submitted,
Provost and Pritchard Consulting Group

John S. Dutton, PE
Principal Engineer

# Exhibit Table of Contents

Exhibit A – Reuse Pipeline System

Exhibit B – Water Balance Summary for 22 MGD (Basin Storage)

Exhibit C – Month by Month Volumes of Basin Storage

Exhibit D – Monthly Over Storage Capacity (ac-ft/month)

Exhibit E – Water Balance Summary for 22 MGD (Future Design Flows)

Exhibit F – Month by Month Volumes of Effluent Reuse

Exhibit G-1 – Hydraulic Calculations from Plant to Basin #4 Ditch

Exhibit G-2 – Hydraulic Calculations from Plant to TID Ditch

Exhibit G-3 – Hydraulic Calculations from Plant to Hwy 198 & Kelsey

Exhibit H – Overall Pipeline Cost Estimate

Exhibit I – Regulating Basin Volume Calculations (+20% Outflow)

Exhibit I-1 to Exhibit I-4 are calculation sheets for Exhibit I

Exhibit J – Regulating Basin Volume Calculations (-20% Outflow)

Exhibit J-1 to Exhibit J-4 are calculation sheets for Exhibit J

Exhibit K – Golf Course Pond Elevation Drops Over 24 Hour Cycle

Exhibit K-1 to Exhibit K-4 are calculation sheets for Exhibit K

# EXHIBIT A

## OVERALL LAYOUT

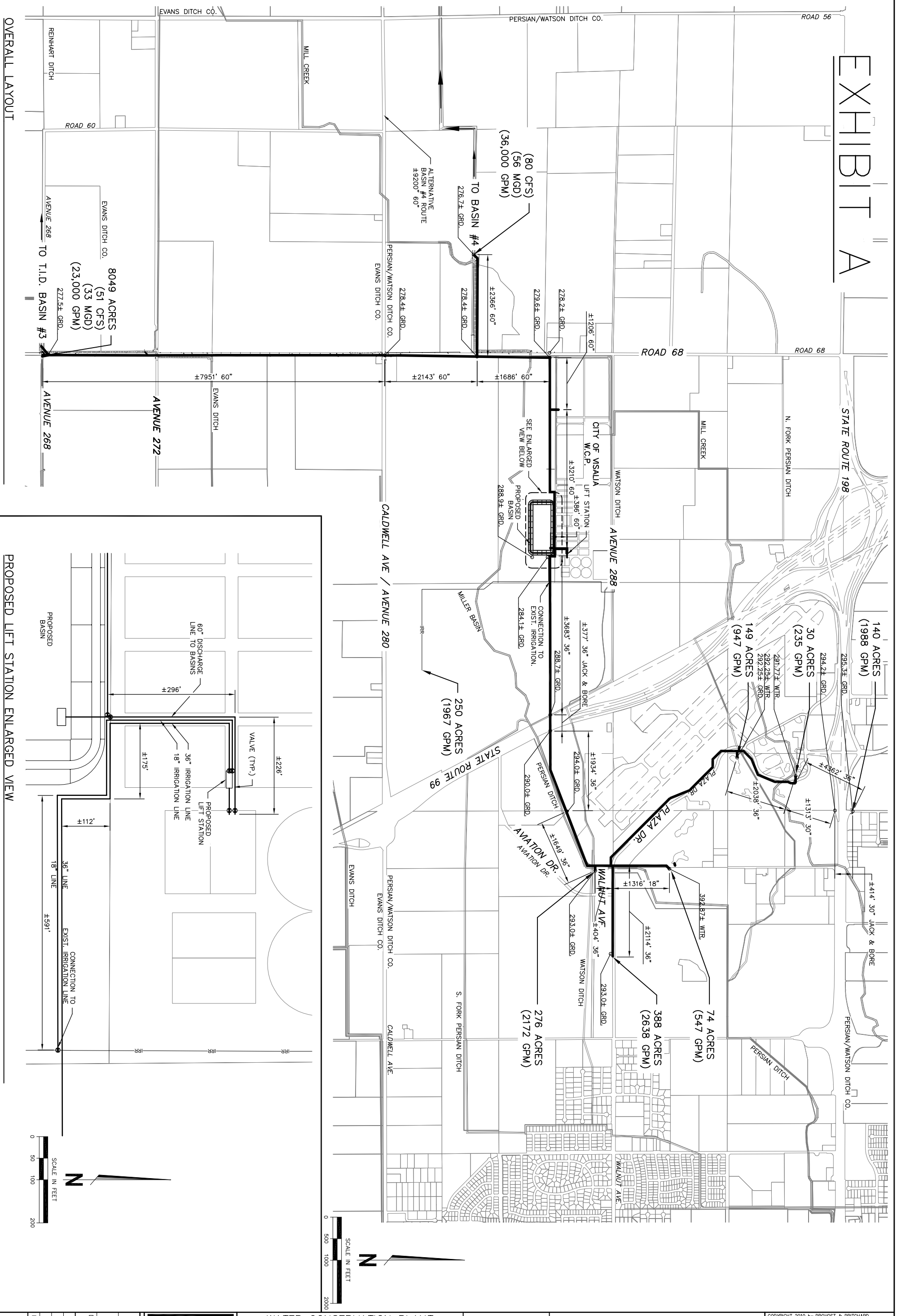


## PROPOSED LIFT STATION ENLARGED VIEW




| | |
|---|---|
| DESIGN ENGINEER: | ---- |
| LICENSE NO: | ---- |
| DRAFTED BY: P&P | CHECKED BY: ---- |
| SCALE: AS SHOWN | |
| DATE: 10-1-2009 | |
| JOB NO: 197909V1 | |
| DWG. NO: | |
| SHEET | --- OF --- |

EST. 1968
PROVOST & PRITCHARD
CONSULTING GROUP
An Employee Owned Company
130 NORTH GARDEN STREET
VISALIA, CALIFORNIA 93291-6362
559/636-1166 FAX 559/636-1177
www.ppeng.com

WATER CONSERVATION PLANT
REUSE PIPELINE SYSTEM
PARSONS WATER & INFRASTRUCTURE INC.
VISALIA, CALIFORNIA

EXHIBIT A

| No. | REVISION | BY | DATE |
|---|---|---|---|


COPYRIGHT 2010 by PROVOST & PRITCHARD CONSULTING GROUP, INC. ALL RIGHTS RESERVED
The firm of Provost & Pritchard Engineering Group, Inc. expressly reserves its common law copyright and other applicable property rights in these plans. These plans are not to be reproduced, changed, or copied in any form or manner whatsoever, nor are they to be assigned to a third party without first obtaining the written permission and consent of Provost & Pritchard Engineering Group, Inc. In the event of unauthorized reuse of these plans by a third party, the third party shall hold the firm of Provost & Pritchard Engineering Group, Inc. harmless, and shall bear the cost of Provost & Pritchard Engineering Group, Inc.'s legal fees associated with defending and enforcing these rights.

**City of Visalia Water Conservation Plant**
**Water Balance Summary for 22 MGD (Future Design Flows)**
No re-use Scenario. All effluent going to City owned basins.

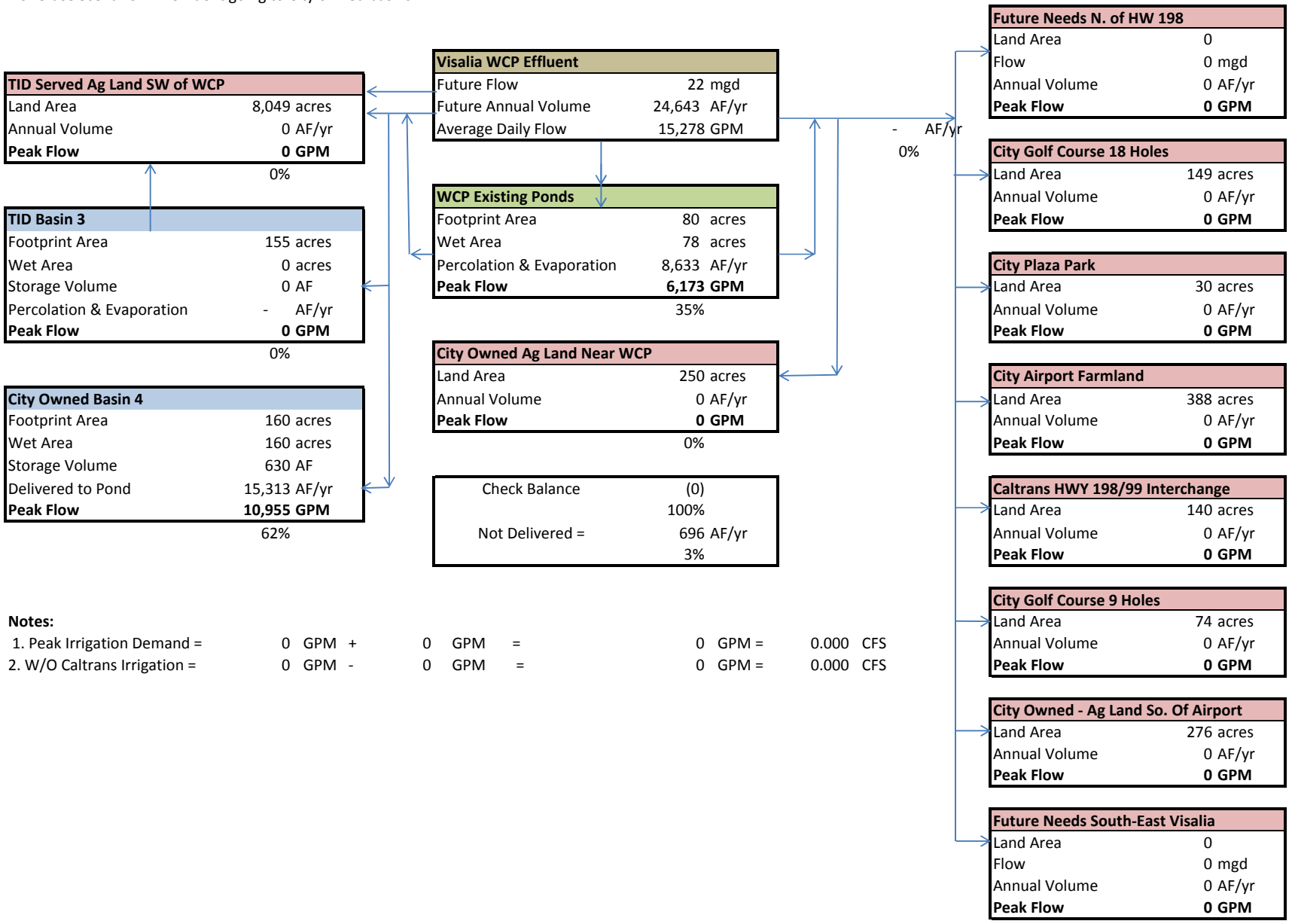


**Notes:**

| | | | | | | | | |
|---|---|---|---|---|---|---|---|---|
| 1. Peak Irrigation Demand = | 0 | GPM | + | 0 | GPM | = | 0 GPM = | 0.000 CFS |
| 2. W/O Caltrans Irrigation = | 0 | GPM | - | 0 | GPM | = | 0 GPM = | 0.000 CFS |

Exhibit C

**22 MGD ADF AT WATER CONSERVATION PLANT MONTH BY MONTH VOLUMES OF EFFLUENT REUSE**

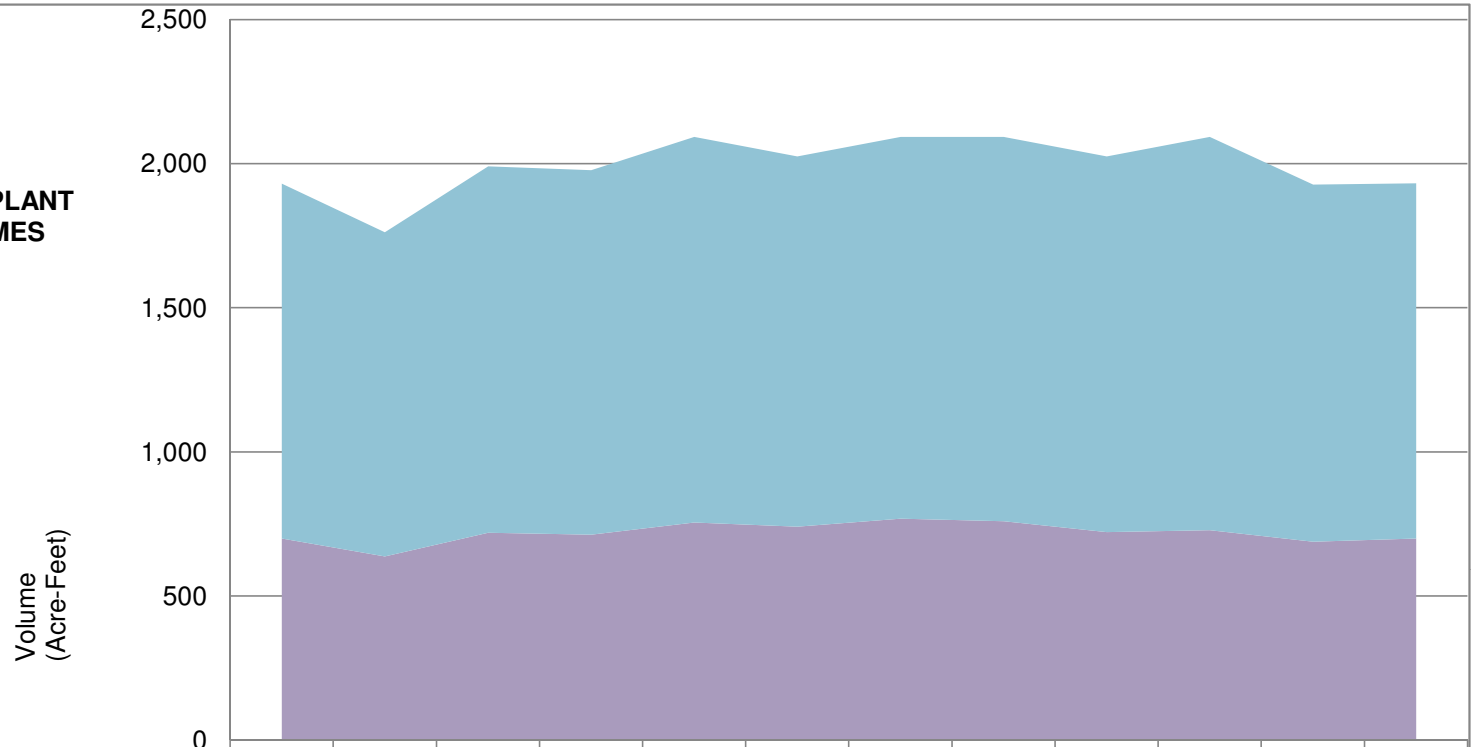


| | Jan | Feb | Mar | Apr | May | Jun | Jul | Aug | Sep | Oct | Nov | Dec |
|---|---|---|---|---|---|---|---|---|---|---|---|---|
| City Owned Basin 4 (ac-ft/month) | 1,232 | 1,125 | 1,272 | 1,265 | 1,337 | 1,285 | 1,324 | 1,334 | 1,304 | 1,364 | 1,240 | 1,232 |
| WCP Existing Ponds (ac-ft/month) | 700 | 638 | 719 | 713 | 756 | 741 | 769 | 759 | 722 | 729 | 689 | 700 |
| TID Basin 3 (ac-ft/month) | 0 | 0 | 0 | 0 | 0 | 0 | 0 | 0 | 0 | 0 | 0 | 0 |
| TID Farmland (ac-ft/month) | 0 | 0 | 0 | 0 | 0 | 0 | 0 | 0 | 0 | 0 | 0 | 0 |
| City Farmland South of Airport (ac-ft/month) | 0 | 0 | 0 | 0 | 0 | 0 | 0 | 0 | 0 | 0 | 0 | 0 |
| Airport Farmland (ac-ft/month) | 0 | 0 | 0 | 0 | 0 | 0 | 0 | 0 | 0 | 0 | 0 | 0 |
| City Farmland At WCP (ac-ft/month) | 0 | 0 | 0 | 0 | 0 | 0 | 0 | 0 | 0 | 0 | 0 | 0 |
| HW 198/99 Interchange (ac-ft/month) | 0 | 0 | 0 | 0 | 0 | 0 | 0 | 0 | 0 | 0 | 0 | 0 |
| Plaza Park (ac-ft/month) | 0 | 0 | 0 | 0 | 0 | 0 | 0 | 0 | 0 | 0 | 0 | 0 |
| Valley Oaks 9 Hole Course (ac-ft/month) | 0 | 0 | 0 | 0 | 0 | 0 | 0 | 0 | 0 | 0 | 0 | 0 |
| Valley Oaks 18 Hole Course (ac-ft/month) | 0 | 0 | 0 | 0 | 0 | 0 | 0 | 0 | 0 | 0 | 0 | 0 |

**22 MGD ADF AT WATER CONSERVATION PLANT MONTH BY MONTH VOLUMES OF EFFLUENT REUSE**

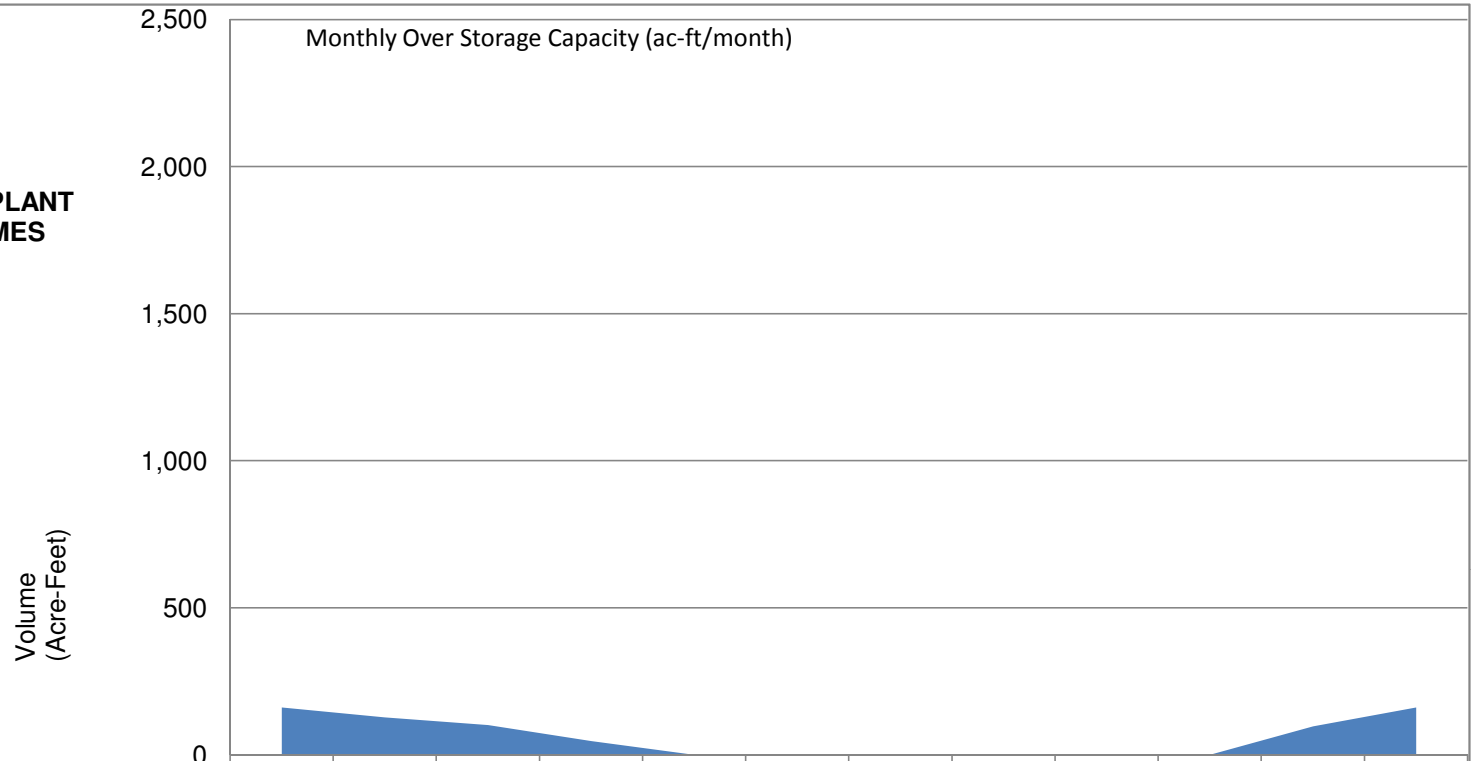


| | Jan | Feb | Mar | Apr | May | Jun | Jul | Aug | Sep | Oct | Nov | Dec |
|---|---|---|---|---|---|---|---|---|---|---|---|---|
| Monthly Over Storage Capacity (ac-ft/month) | 162 | 127 | 102 | 47 | 0 | 0 | 0 | 0 | 0 | 0 | 97 | 161 |

**City of Visalia Water Conservation Plant**
**Water Balance Summary for 22 MGD (Future Design Flows)**
Maximize Irrigation to Plaza Park, Golf Course, City Farmland, Hwy 99/198, & then to TID Facilities.
Flows at this level maximize flow to the TID Basin & WCP Ponds in January and December with excess going to Basin # 4.

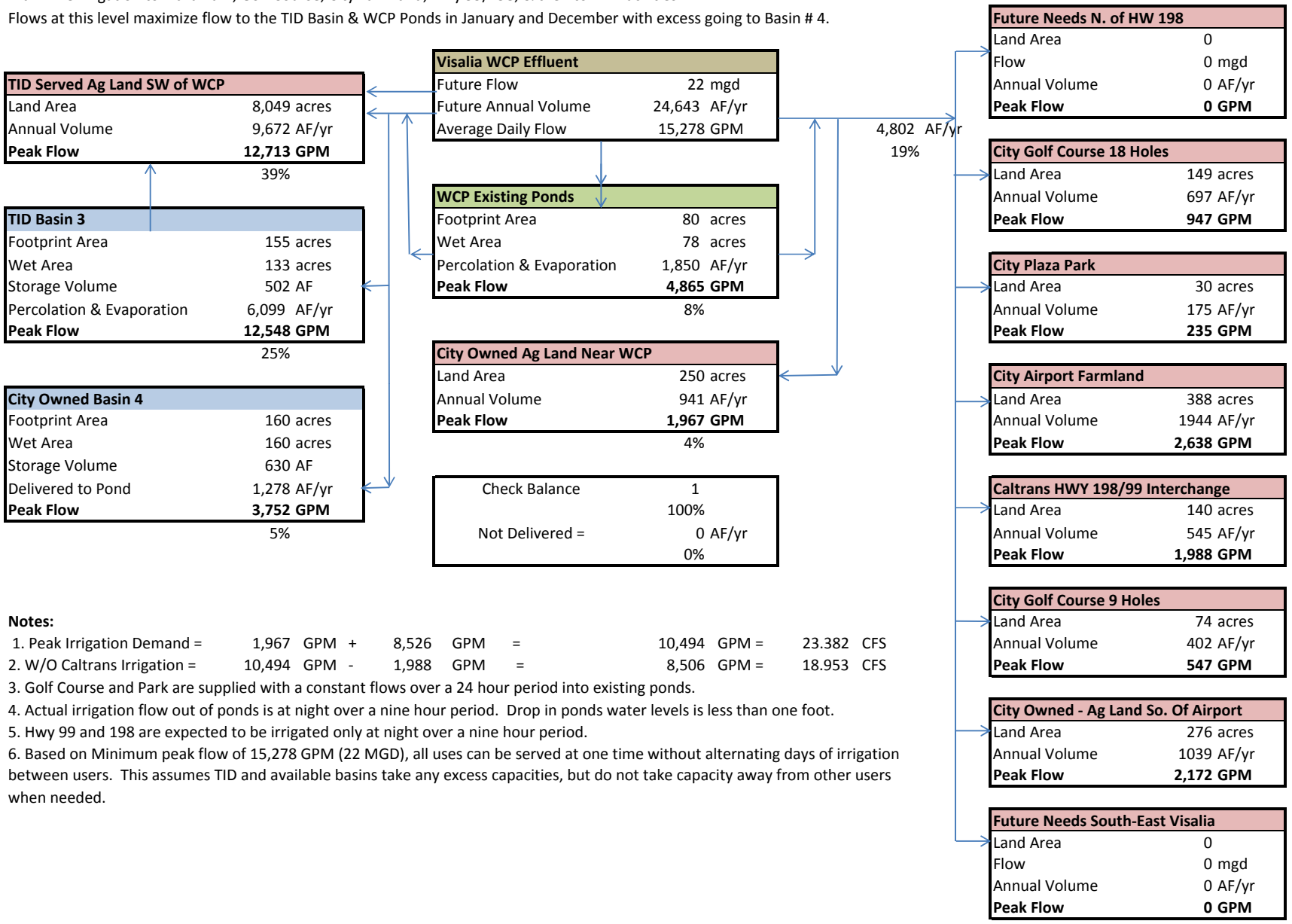


**Notes:**

| | | | | | | | | | |
|---|---|---|---|---|---|---|---|---|---|
| 1. Peak Irrigation Demand = | 1,967 | GPM | + | 8,526 | GPM | = | 10,494 | GPM = | 23.382 CFS |
| 2. W/O Caltrans Irrigation = | 10,494 | GPM | - | 1,988 | GPM | = | 8,506 | GPM = | 18.953 CFS |

3. Golf Course and Park are supplied with a constant flows over a 24 hour period into existing ponds.
4. Actual irrigation flow out of ponds is at night over a nine hour period. Drop in ponds water levels is less than one foot.
5. Hwy 99 and 198 are expected to be irrigated only at night over a nine hour period.
6. Based on Minimum peak flow of 15,278 GPM (22 MGD), all uses can be served at one time without alternating days of irrigation between users. This assumes TID and available basins take any excess capacities, but do not take capacity away from other users when needed.

**22 MGD ADF AT WATER CONSERVATION PLANT MONTH BY MONTH VOLUMES OF EFFLUENT REUSE**

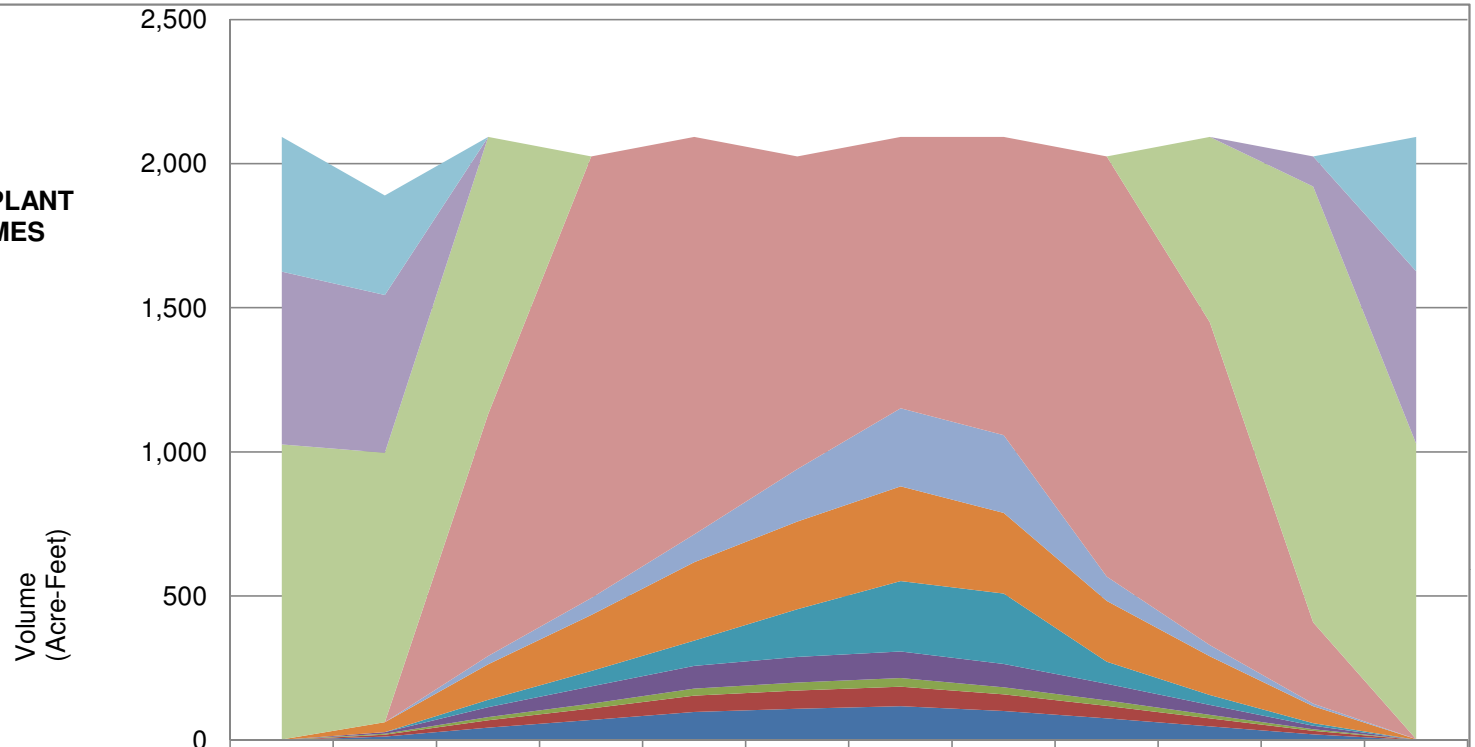


| | Jan | Feb | Mar | Apr | May | Jun | Jul | Aug | Sep | Oct | Nov | Dec |
|---|---|---|---|---|---|---|---|---|---|---|---|---|
| City Owned Basin 4 (ac-ft/month) | 467 | 346 | 0 | 0 | 0 | 0 | 0 | 0 | 0 | 0 | 0 | 466 |
| WCP Existing Ponds (ac-ft/month) | 599 | 547 | 0 | 0 | 0 | 0 | 0 | 0 | 0 | 0 | 104 | 599 |
| TID Basin 3 (ac-ft/month) | 1,024 | 935 | 961 | 0 | 0 | 0 | 0 | 0 | 0 | 643 | 1,512 | 1,024 |
| TID Farmland (ac-ft/month) | 0 | 0 | 840 | 1,532 | 1,379 | 1,085 | 941 | 1,035 | 1,458 | 1,120 | 282 | 0 |
| City Farmland South of Airport (ac-ft/month) | 0 | 0 | 29 | 59 | 96 | 182 | 270 | 269 | 85 | 38 | 10 | 0 |
| Airport Farmland (ac-ft/month) | 2 | 34 | 123 | 194 | 273 | 304 | 329 | 281 | 211 | 134 | 58 | 2 |
| City Farmland At WCP (ac-ft/month) | 0 | 0 | 26 | 54 | 87 | 165 | 245 | 244 | 77 | 35 | 9 | 0 |
| HW 198/99 Interchange (ac-ft/month) | 0 | 6 | 34 | 60 | 79 | 90 | 92 | 81 | 57 | 34 | 12 | 0 |
| Plaza Park (ac-ft/month) | 1 | 4 | 11 | 17 | 24 | 27 | 29 | 25 | 19 | 12 | 5 | 1 |
| Valley Oaks 9 Hole Course (ac-ft/month) | 0 | 7 | 25 | 40 | 56 | 63 | 68 | 58 | 44 | 28 | 12 | 0 |
| Valley Oaks 18 Hole Course (ac-ft/month) | 0 | 12 | 44 | 70 | 98 | 109 | 118 | 101 | 76 | 48 | 21 | 1 |

PROVOST & PRITCHARD ENGINEERING GROUP
EST. 1968
An Employee-Owned Company

**Exhibit G-1**
**26 MGD Design Flow - 2.0 Peaking Factor**
**Visalia Water Conservation Plant Pipeline Project**
**Hydraulic Calculations from Plant to Beginning of Basin #4 Ditch**

**DATE: 2/25/2010**

| | | | | | | | | | | | | | | | | | | | | | | |
|---|---|---|---|---|---|---|---|---|---|---|---|---|---|---|---|---|---|---|---|---|---|---|
| | Pipe Material: | **60" Pipe** | | | | | | | | | | | | | | | | | | | | |
| | Hazen-Williams "C": | 100 | | | | | | | | | | | | | | | | | | | | |
| | | 7.90 | ft | (adj to match discharge elevation at ditch inlet to Basin #4 estimated at 273.2') | | | | | | | | | | | | | | | | | | |
| | | Starting Hydraulic Grade at 0+00= | | | 288.8 | feet | This is okay below 290.0 feet elevation at plant. | | | | | | | | | | | End of Pipe Station | | | | |
| **Section No.** | **Description** | **Pipe Station Start (ft)** | **End (ft)** | **Length (ft)** | **Pipe CL Elevation Start (ft)** | **End (ft)** | **Change (+-ft)** | **Pipe Size I.D. (in)** | **Wall Thickness (in)** | **Pipe Rating (psi)** | **Design Flowrate (cfs)** | **Flow Velocity (fps)** | **Friction Loss (ft)** | **Other Losses (ft)** | **Total Loss (ft)** | **Working Pressure (ft)** | **Working Pressure (psi)** | **HGL Elevation (ft)** | | | | |
| 1 | Discharge from Visalia WCP | **+0.00** | 5+22 | 522 | 280.9 | 276.1 | -4.8 | 60 | 1.032 | 63 | 80.456 | 4.1 | 0.67 | 0.13 | 0.80 | 11.9 | 5.2 | 288.00 | | | | |
| 2 | from Disch Pipe West to Pond Inlet | 5+22 | 37+32 | 3,210 | 276.1 | 271.0 | -5.1 | 60 | 1.032 | 63 | 80.456 | 4.1 | 4.11 | 0.23 | 4.34 | 12.7 | 5.5 | 283.70 | | | | |
| 3 | from Pond west Inlet to Rd 68 | 37+32 | 49+38 | 1,206 | 271.0 | 270.2 | -0.8 | 60 | 1.032 | 63 | 80.456 | 4.1 | 1.54 | 0.23 | 1.77 | 11.7 | 5.1 | 281.90 | | | | |
| 4 | continue in Rd 68 to Disch Pipe West | 49+38 | 66+24 | 1,686 | 270.2 | 270.4 | 0.2 | 60 | 1.032 | 63 | 80.456 | 4.1 | 2.16 | 0.23 | 2.39 | 9.1 | 3.9 | 279.50 | | | | |
| 5 | west past Mill Creek to ditch ending at Basin | 66+24 | 89+90 | 2,366 | 270.4 | 268.7 | -1.7 | 60 | 1.032 | 63 | 80.456 | 4.1 | 3.03 | 0.26 | 3.29 | 7.5 | 3.3 | 276.20 | | | | |
| 8 | | | | | | | | | | | | | | | | | | | | | | |
| 9 | | | | | | | | | | | | | | | | | | | | | | |
| 10 | | | | | | | | | | | | | | | | | | | | | | |
| 11 | | | | | | | | | | | | | | | | | | | | | | |
| 12 | | | | | | | | | | | | | | | | | | | | | | |
| 13 | | | | | | | | | | | | | | | | | | | | | | |
| 14 | | | | | | | | | | | | | | | | | | | | | | |
| 15 | | | | | | | | | | | | | | | | | | | | | | |
| *16* | | | | | | | | | | | | | | | | | | | | | | |
| *17* | | | | | | | | | | | | | | | | | | | | | | |
| *18* | | | | | | | | | | | | | | | | | | | | | | |
| *19* | | | | | | | | | | | | | | | | | | | | | | |
| | | | | | | | **-12.2** | | | | | | 11.51 | 1.08 | 12.59 | | | | | | | |
| | | | 8,990 | Total Length of Pipe from Treatment Plant. | | | | | | | | | | | | | | Approx HGL at Plant = | 288.00 | feet | (Assumed) | |
| | | | | | | | | | | | | | | | | | | Ditch Bottom Elevation at Discharge = | 270.94 | feet | | |
| | *Design flow based on 26 MGD with 2.0 PF at discharge and bypasssing Regulating Reservoir* | | | | | | | | | | | | | | | | | Ground Elevation at Discharge = | 275.95 | feet | | |
| | *Slight calculation differences are due to rounding.* | | | | | | | | | | | | | | | | | Ground Elevation Minus 2 ft. Freeboard at Discharge = | 273.95 | feet | | |
| | 285.1 feet elevation okay at upstream basin location. Assumes flow at ultimate emergency level with option to bypass basin. | | | | | | | | | Water Elev in Channel= | | +/-273.0 ft' | at 80.456 cfs | | | | | Approx HGL in Pipe at Discharge = | 276.20 | feet | Okay | |

PROVOST & PRITCHARD ENGINEERING GROUP
EST. 1968
An Employee-Owned Company

**Exhibit G-2**
**22 MGD Design Flow - 1.5 Peaking Factor**
**Visalia Water Conservation Plant Pipeline Project**
**Hydraulic Calculations from Plant to End TID Line**

**DATE: 2/25/2010**

| | | | | | | | | | | | | | | | | | | | | | | |
|---|---|---|---|---|---|---|---|---|---|---|---|---|---|---|---|---|---|---|---|---|---|---|
| | Pipe Diameter: | **60" Pipe** | | | | | | | | | | | | | | | | | | | | |
| | Hazen-Williams "C": | 100 | | | | | | | | | | | | | | | | | | | | |
| | | 3.5 | ft | (adj to meet hyd grade line of 284 ft elevation at reservoir) | | | | | | | | | | | | | | | | | | |
| | | Starting Hydraulic Grade at 0+00 = | | | 284.4 | feet | | | | | | | | | | | | End of Pipe Station | | | | |
| **Section No.** | **Description** | **Pipe Station Start** (ft) | **End** (ft) | **Length** (ft) | **Pipe CL Elevation Start** (ft) | **End** (ft) | **Change** (+-ft) | **Pipe Size I.D.** (in) | **Wall Thickness** (in) | **Pipe Rating** (psi) | **Design Flowrate** (cfs) | **Flow Velocity** (fps) | **Friction Loss** (ft) | **Other Losses** (ft) | **Total Loss** (ft) | **Working Pressure** (ft) | (psi) | **HGL Elevation** (ft) | | | | |
| 1 | Discharge from Visalia WCP | **+0.00** | 5+22 | 522 | 280.9 | 276.1 | -4.8 | 60 | 1.032 | 63 | 51.06 | 2.6 | 0.29 | 0.07 | 0.36 | 7.9 | 3.4 | 284.0 | | | | |
| 2 | from Disch Pipe West to Pond Inlet | 5+22 | 37+32 | 3,210 | 276.1 | 271.0 | -5.1 | 60 | 1.032 | 63 | 51.06 | 2.6 | 1.77 | 0.07 | 1.84 | 11.2 | 4.9 | 282.2 | | | | |
| 3 | from Pond west Inlet to Rd 68 | 37+32 | 49+38 | 1,206 | 271.0 | 270.2 | -0.8 | 60 | 1.032 | 63 | 51.06 | 2.6 | 0.66 | 0.13 | 0.79 | 11.2 | 4.9 | 281.4 | | | | |
| 4 | continue in Rd 68 to Disch Pipe West | 49+38 | 66+24 | 1,686 | 270.2 | 270.4 | 0.2 | 60 | 1.032 | 63 | 51.06 | 2.6 | 0.93 | 0.00 | 0.93 | 10.1 | 4.4 | 280.5 | | | | |
| 5 | continue in Rd 68 to Ave 280/Calwell | 66+24 | 87+67 | 2,143 | 270.4 | 270.1 | -0.3 | 60 | 1.032 | 63 | 51.06 | 2.6 | 1.18 | 0.00 | 1.18 | 9.2 | 4.0 | 279.3 | | | | |
| 6 | continue to Ave 268 | 87+67 | 167+18 | 7,951 | 270.1 | 269.5 | -0.6 | 60 | 1.032 | 63 | 51.06 | 2.6 | 4.38 | 0.14 | 4.52 | 5.3 | 2.3 | 274.8 | | | | |
| 7 | | | | | | | | | | | | | | | | | | | | | | |
| 8 | | | | | | | | | | | | | | | | | | | | | | |
| 9 | | | | | | | | | | | | | | | | | | | | | | |
| 10 | | | | | | | | | | | | | | | | | | | | | | |
| 11 | | | | | | | | | | | | | | | | | | | | | | |
| 12 | | | | | | | | | | | | | | | | | | | | | | |
| 13 | | | | | | | | | | | | | | | | | | | | | | |
| 14 | | | | | | | | | | | | | | | | | | | | | | |
| 15 | | | | | | | | | | | | | | | | | | | | | | |
| *16* | | | | | | | | | | | | | | | | | | | | | | |
| *17* | | | | | | | | | | | | | | | | | | | | | | |
| *18* | | | | | | | | | | | | | | | | | | | | | | |
| *19* | | | | | | | | | | | | | | | | | | | | | | |
| | | | | | | | **-11.4** | | | | | | 9.21 | 0.41 | 9.62 | | | | | | | |
| | | | 16,718 | Total Length of Pipe from Treatment Plant. | | | | | | | | | | | Approx HGL at Basin = | | | 284.0 | feet | | | |
| | | | | | | | | | | | | | | Ditch Bottom Elevation at Discharge = | | | | 269.0 | feet | | | |
| | *Design flow based on 22 MGD with 1.5 PF at discharge to Regulating Reservoir* | | | | | | | | | | | | | Ground Elevation at Discharge = | | | | 277.1 | feet | | | |
| | *Slight calculation differences are due to rounding.* | | | | | | | | | | | | Ground Elevation Minus 2 ft. Freeboard at Discharge = | | | | | 275.1 | feet | | | |
| | | | | Assuming discharge point is upstream of culvert crossing Rd. 68 Water Elev in Channel= | | | | | | | | 273.5 ft | at 51 cfs | Approx HGL in Pipe at Discharge = | | | | 274.8 | feet | Okay | | |

**Exhibit G-3**
**22 MGD Design Flow at Plant**
**Visalia Water Conservation Plant Pipeline Project**
**Hydraulic Calculations for Irrigation Pipelines from Plant to East**

**DATE: 2/25/2010**

Pipe Diameters: **36" to 30" Pipe**
Hazen-Williams "C": 100

Pumping Plant Design Head: 29.3 ft

Reduced Flow Factors (Yes/No)? No

| | | | | |
|---|---|---|---|---|
| Golf Pond 9 | 0 cfs | 0 | cfs | |
| Golf Pond 18 | 0 cfs | 0 | cfs | |
| Plaza Park | 0 cfs | 0 | cfs | |
| Hwy 99/198 | 0 cfs | 0 | cfs | |

| Section No. | Description | Pipe Station Start (ft) | Pipe Station End (ft) | Length (ft) | Pipe CL Elevation Start (ft) | Pipe CL Elevation End (ft) | Change (+-ft) | Pipe Size I.D. (in) | Pipe Rating (psi) | Design Flowrate (cfs) | Flow Velocity (fps) | Friction Loss (ft) | Other Losses (ft) | Total Loss (ft) | End of Pipe Station: Working Pressure (ft) | Working Pressure (psi) | HGL Elevation (ft) |
|---|---|---|---|---|---|---|---|---|---|---|---|---|---|---|---|---|---|
| 1 | Discharge from Pump Station | **+0.00** | 5+22 | 522 | 284.0 | 276.1 | -7.9 | 36 | 63 | 23.382 | 3.3 | 0.81 | 2.50 | 3.31 | 33.9 | 14.7 | 310.0 |
| 3 | Continue to West edge RR | 5+22 | 44+92 | 3,970 | 276.1 | 280.7 | 4.6 | 36 | 63 | 18.9982 | 2.7 | 4.21 | 0.00 | 4.21 | 25.1 | 10.9 | 305.8 |
| 4 | Continue to East edge Hwy 99 | 44+92 | 48+69 | 377 | 280.7 | 282.0 | 1.3 | 36 | 63 | 18.9982 | 2.7 | 0.40 | 0.00 | 0.40 | 23.4 | 10.1 | 305.4 |
| 6 | NE along Persian Ditch to Well | 48+69 | 68+03 | 1,934 | 282.0 | 286.1 | 4.1 | 36 | 63 | 18.9982 | 2.7 | 2.05 | 0.00 | 2.05 | 17.3 | 7.5 | 303.4 |
| 7 | Continue NE to another Well | 68+03 | 84+52 | 1,649 | 286.1 | 285.0 | -1.1 | 36 | 63 | 18.998 | 2.7 | 1.75 | 0.00 | 1.75 | 16.7 | 7.2 | 301.7 |
| 9 | Continue North to Walnut Ave | 84+52 | 88+56 | 404 | 285.0 | 285.0 | 0.0 | 36 | 63 | 13.121 | 1.9 | 0.22 | 0.00 | 0.22 | 16.5 | 7.2 | 301.5 |
| 11 | to West Golf Pond in Plaza Dr. | 88+56 | 132+18 | 4,362 | 285.0 | 284.5 | -0.5 | 36 | 63 | 7.063 | 1.0 | 0.74 | 0.00 | 0.74 | 16.3 | 7.1 | 300.8 |
| 12 | to Plaza Park Pond Inlet Pipe | 132+18 | 152+56 | 2,038 | 284.5 | 285.0 | 0.5 | 36 | 63 | 4.953 | 0.7 | 0.18 | 0.00 | 0.18 | 15.6 | 6.8 | 300.6 |
| 13 | to Points North of Hwy 198 | 152+56 | 169+83 | 1,727 | 285.0 | 287.3 | 2.3 | 30 | 63 | 4.429 | 0.9 | 0.30 | 0.00 | 0.30 | 13.0 | 5.6 | 300.3 |
| 14 | | | | | | | | | | | | | | | | | |
| 15 | **City of Visalia Water Conservation Plant** | | | | | | | | | | | | | | | | |
| *16* | **Water Balance Summary for 22 MGD (Future Design Flows)** | | | | | | | | | | | | | | | | |
| *17* | Maximize Irrigation to Plaza Park, Golf Course, City Farmland, Hwy 99/198, & then to TID Facilities. | | | | | | | | | | | | | | | | |
| *18* | Flows at this level maximize flow to the TID Basin & WCP Ponds in January and December with excess going to Basin # 4. | | | | | | | | | | | | | | | | |
| *19* | | | | | | | | | | | | | | | | | |
| | | | | | | | **3.3** | | | | | 10.66 | 2.50 | 13.16 | | | |

16,983 Total Length of Pipe from Treatment Plant.

*Slight calculation differences are due to rounding.*

Note: Minor losses of 2.5 feet applied at beginning to account for thirteen 45 degree elbows and one entrance loss at 5 fps velocity.

| | |
|---|---|
| Approx HGL at Basin = | 284.0 feet |
| Ground Elevation at Discharge = | 295.3 feet |
| Approx HGL in Pipe at discharge = | 300.3 feet |

**City of Visalia**
**Water Conservation Plant**
**OPINION OF PROBABLE ENGINEERING COSTS (OPEC)**
**OVERALL PIPELINE INSTALLATION ESTIMATE**

| Item No. | Work or Material | Estimated Quantity | Unit | Unit Price | Amount |
|---|---|---|---|---|---|
| | **TID Pipeline** | | | | |
| **1** | Mobilization (8%) | 1 | LS | LS | $237,885 |
| **2** | TID Regulating Basin (40 acre-feet Capacity) | 1 | EA | $310,000 | $310,000 |
| **4** | Control Structures | 1 | LS | $100,000 | $100,000 |
| **5** | F & I - 60" RCP Pipeline | 10,094 | LF | $200 | $2,018,800 |
| **6** | Trench Resurfacing 60" Pipeline (3"AC/6"AB) | 100,940 | SF | $4.00 | $403,760 |
| **7** | TID Ditch Inlet Structure | 1 | EA | $50,000 | $50,000 |
| **8** | 60" Road Crossing | 1 | EA | $30,000 | $30,000 |
| **9** | 60" Ditch Crossing (Bore) | 1 | EA | $30,000 | $30,000 |
| **10** | F & I - Air Vents | 7 | EA | $3,000 | $21,000 |
| **11** | F & I - Flow Meter | 1 | EA | $10,000 | $10,000 |
| **12** | Traffic Control | 1 | LS | $100,000 | $100,000 |
| | | | | **SUBTOTAL** | **$3,311,445** |
| | | | | | |
| | **WCP Mill Creek Bypass to Basin #4** | | | | |
| **1** | Mobilization (8%) | 1 | LS | LS | $168,259 |
| **2** | F & I - 60" RCP Pipeline | 8,854 | LF | $200 | $1,770,800 |
| **3** | Connection to WCP | 1 | LS | $10,000 | $10,000 |
| **4** | Connection to Existing Irrigation System | 1 | LS | $5,000 | $5,000 |
| **5** | Irrigation System Pump | 1 | LS | $100,000 | $100,000 |
| **6** | Trench Resurfacing 60" Pipeline (3"AC/6"AB) | 16,860 | SF | $4.00 | $67,440 |
| **7** | Ditch Inlet Structure | 1 | EA | $50,000 | $50,000 |
| **8** | 60" Road Crossing | 1 | EA | $50,000 | $50,000 |
| **9** | 60" Ditch Crossing (Boring) | 1 | EA | $50,000 | $50,000 |
| **10** | F & I - Air Vents | 6 | EA | $3,000 | $18,000 |
| **11** | Traffic Control | 1 | LS | $10,000 | $10,000 |
| | | | | **SUBTOTAL** | **$2,299,499** |
| | | | | | |
| | **City of Visalia Reuse Pipeline** | | | | |
| **1** | Mobilization (8%) | 1 | LS | LS | $349,571 |
| **2** | Connection to TID Regulating Basin | 1 | LS | $50,000 | $50,000 |
| **3** | Pump Station (3 Pumps total 480 HP with One VFD) | 1 | LS | $750,000 | $750,000 |
| **4** | Electrical Controls (Pump Station) | 1 | LS | $50,000 | $50,000 |
| **5** | F & I - 36" RCP Pipeline | 15,108 | LF | $148 | $2,235,984 |
| **6** | F & I - 30" RCP Pipeline | 1,313 | LF | $130 | $170,690 |
| **7** | F & I - 18" RCP Pipeline | 1,316 | LF | $94 | $123,704 |
| **8** | Trench Resurfacing (3"AC/6"AB) | 85,140 | SF | $4.00 | $340,560 |
| **9** | 36" Walnut Ave. Crossing | 1 | LS | $30,000 | $30,000 |
| **10** | 36" Mill Creek Crossing | 1 | LS | $30,000 | $30,000 |
| **11** | F & I - Air/Vacuum & Pressure Relief Valves Assembly | 12 | EA | $7,000 | $84,000 |
| **12** | F & I - Lateral Valve Assembly w/Flow Meter | 8 | EA | $5,000 | $40,000 |
| **13** | 36" Highway 99 Bore and Crossing (54" Casing) | 377 | LF | $1,100 | $414,700 |
| **14** | Irrigation Well Modifications | 10 | EA | $5,000 | $50,000 |
| **15** | Traffic Control | 1 | EA | $50,000 | $50,000 |
| | | | | **SUBTOTAL** | **$4,769,209** |
| | | | | | |
| | | | | | |
| | | | | **SUBTOTAL** | **$10,380,153** |
| | | | | **Administration & Engineering (20%)** | **$2,076,031** |
| | | | | **Contingency Amount (20%)** | **$2,076,031** |
| | | | | **TOTAL PROJECT COST ESTIMATE** | **$14,532,214** |

Exhibit I

Outflow set @ 20% above or below average daily flow (Positive is More Flow and Negative is Less Flow) Future Design Ave Flow= 26.000 MGD

| | Flows Based on Present Operations | | Basin Volumes based on Present | | Basin Volumes with Flow Ratio'd to Design Flow |
|---|---|---|---|---|---|
| | July 14, 2009 to July 15, 2009 Flows | | July 14, 2009 to July 15, 2009 Flows | | July 14, 2009 to July 15, 2009 Flows |
| | | | calc'ed High to Low= 7.863 | | calc'ed High to Low= 13.293 |
| | Set Flow= 15.380 mgd | 12:00 AM | Start Volume= 20.000 acre feet | 12:00 AM | Start Volume= 20.000 acre feet |
| | ADF= 12.817 mgd | 12:00 AM | High Volume= 20.000 acre feet | 12:00 AM | High Volume= 20.000 acre feet |
| | | 12:00 AM | Low Volume= 12.137 acre feet | 12:00 AM | Low Volume= 6.707 acre feet |
| | August 25, 2009 to Aug 26, 2009 Flows | | August 25, 2009 to Aug 26, 2009 Flows | | August 25, 2009 to Aug 26, 2009 Flows |
| | | | calc'ed High to Low= 7.641 | | calc'ed High to Low= 13.523 |
| | Set Flow= 14.690 mgd | 12:00 AM | Start Volume= 20.000 acre feet | 12:00 AM | Start Volume= 20.000 acre feet |
| | ADF= 12.242 mgd | 2:00 AM | High Volume= 20.130 acre feet | 2:00 AM | High Volume= 20.231 acre feet |
| | | 12:00 AM | Low Volume= 12.490 acre feet | 12:00 AM | Low Volume= 6.707 acre feet |
| | Sept 13, 2009 to Sept 14, 2009 Flows | | Sept 13, 2009 to Sept 14, 2009 Flows | | Sept 13, 2009 to Sept 14, 2009 Flows |
| | | | calc'ed High to Low= 8.650 | | calc'ed High to Low= 15.080 |
| | Set Flow= 14.915 mgd | 12:00 AM | Start Volume= 20.000 acre feet | 12:00 AM | Start Volume= 20.000 acre feet |
| | ADF= 12.429 mgd | 1:00 AM | High Volume= 20.088 acre feet | 1:00 AM | High Volume= 20.153 acre feet |
| | | 1:00 PM | Low Volume= 11.437 acre feet | 1:00 PM | Low Volume= 5.073 acre feet |
| | Oct 19, 2009 to Oct 20, 2009 Flows | | Oct 19, 2009 to Oct 20, 2009 Flows | | Oct 19, 2009 to Oct 20, 2009 Flows |
| | | | calc'ed High to Low= 7.538 acre feet | | calc'ed High to Low= 13.621 acre feet |
| | Set Flow= 14.390 mgd | 12:00 AM | Start Volume= 20.000 acre feet | 12:00 AM | Start Volume= 20.000 acre feet |
| | ADF= 11.992 mgd | 2:00 AM | High Volume= 20.181 acre feet | 2:00 AM | High Volume= 20.328 acre feet |
| | | 12:00 AM | Low Volume= 12.643 acre feet | 12:00 AM | Low Volume= 6.707 acre feet |

Start Date Tuesday, July 14, 2009
End Date Wednesday, July 15, 2009

Indicates Input

Starting Water Volume = 20.000 acre feet = 871200.000 cu ft

| Percent Above Ave = | 20% | Flow in | Flow Out | Flow In | Flow Out | Vol/Hour In | Vol/Hour Out | Volume Increase | Water Volume | Water Volume | Volume Increase w/ MGD at plant = 26.000 | Water Volume | Water Volume | |
|---|---|---|---|---|---|---|---|---|---|---|---|---|---|---|
| | Time Period Ending at | mgd | mgd | cfs | cfs | cu ft | cu ft | cu ft | cu ft | acre feet | Time Period Ending at | cu ft | cu ft | acre feet | Time Period Ending at |
| | 12:00 AM | | | | | | | | 871200.000 | 20.000 | 12:00 AM | | 871200.000 | 20.000 | 12:00 AM |
| | 1:00 AM | 13.500 | 15.380 | 20.878 | 23.786 | 75162.227 | 85629.263 | -10467.036 | 860732.964 | 19.760 | 1:00 AM | -17694.599 | 853505.401 | 19.594 | 1:00 AM |
| | 2:00 AM | 14.200 | 15.380 | 21.961 | 23.786 | 79059.528 | 85629.263 | -6569.735 | 854163.229 | 19.609 | 2:00 AM | -11106.185 | 842399.216 | 19.339 | 2:00 AM |
| | 3:00 AM | 14.600 | 15.380 | 22.580 | 23.786 | 81286.557 | 85629.263 | -4342.706 | 849820.522 | 19.509 | 3:00 AM | -7341.376 | 835057.840 | 19.170 | 3:00 AM |
| | 4:00 AM | 10.700 | 15.380 | 16.548 | 23.786 | 59573.024 | 85629.263 | -26056.239 | 823764.283 | 18.911 | 4:00 AM | -44048.258 | 791009.582 | 18.159 | 4:00 AM |
| | 5:00 AM | 9.200 | 15.380 | 14.228 | 23.786 | 51221.666 | 85629.263 | -34407.597 | 789356.686 | 18.121 | 5:00 AM | -58166.289 | 732843.292 | 16.824 | 5:00 AM |
| | 6:00 AM | 8.400 | 15.380 | 12.991 | 23.786 | 46767.608 | 85629.263 | -38861.655 | 750495.031 | 17.229 | 6:00 AM | -65695.906 | 667147.386 | 15.316 | 6:00 AM |
| | 7:00 AM | 7.900 | 15.380 | 12.218 | 23.786 | 43983.822 | 85629.263 | -41645.441 | 708849.589 | 16.273 | 7:00 AM | -70401.917 | 596745.470 | 13.699 | 7:00 AM |
| | 8:00 AM | 7.500 | 15.380 | 11.599 | 23.786 | 41756.793 | 85629.263 | -43872.470 | 664977.119 | 15.266 | 8:00 AM | -74166.725 | 522578.745 | 11.997 | 8:00 AM |
| | 9:00 AM | 8.000 | 15.380 | 12.372 | 23.786 | 44540.579 | 85629.263 | -41088.684 | 623888.435 | 14.323 | 9:00 AM | -69460.714 | 453118.030 | 10.402 | 9:00 AM |
| | 10:00 AM | 10.200 | 15.380 | 15.775 | 23.786 | 56789.238 | 85629.263 | -28840.025 | 595048.410 | 13.660 | 10:00 AM | -48754.268 | 404363.762 | 9.283 | 10:00 AM |
| | 11:00 AM | 11.300 | 15.380 | 17.476 | 23.786 | 62913.568 | 85629.263 | -22715.695 | 572332.714 | 13.139 | 11:00 AM | -38401.045 | 365962.716 | 8.401 | 11:00 AM |
| | 12:00 PM | 13.500 | 15.380 | 20.878 | 23.786 | 75162.227 | 85629.263 | -10467.036 | 561865.678 | 12.899 | 12:00 PM | -17694.599 | 348268.117 | 7.995 | 12:00 PM |
| | 1:00 PM | 13.500 | 15.380 | 20.878 | 23.786 | 75162.227 | 85629.263 | -10467.036 | 551398.642 | 12.658 | 1:00 PM | -17694.599 | 330573.518 | 7.589 | 1:00 PM |
| | 2:00 PM | 15.000 | 15.380 | 23.198 | 23.786 | 83513.586 | 85629.263 | -2115.678 | 549282.965 | 12.610 | 2:00 PM | -3576.568 | 326996.950 | 7.507 | 2:00 PM |
| | 3:00 PM | 15.100 | 15.380 | 23.353 | 23.786 | 84070.343 | 85629.263 | -1558.920 | 547724.045 | 12.574 | 3:00 PM | -2635.366 | 324361.584 | 7.446 | 3:00 PM |
| | 4:00 PM | 17.100 | 15.380 | 26.446 | 23.786 | 95205.488 | 85629.263 | 9576.224 | 557300.269 | 12.794 | 4:00 PM | 16188.676 | 340550.260 | 7.818 | 4:00 PM |
| | 5:00 PM | 16.900 | 15.380 | 26.137 | 23.786 | 94091.973 | 85629.263 | 8462.710 | 565762.979 | 12.988 | 5:00 PM | 14306.272 | 354856.532 | 8.146 | 5:00 PM |
| | 6:00 PM | 14.700 | 15.380 | 22.734 | 23.786 | 81843.314 | 85629.263 | -3785.949 | 561977.030 | 12.901 | 6:00 PM | -6400.174 | 348456.357 | 7.999 | 6:00 PM |
| | 7:00 PM | 14.700 | 15.380 | 22.734 | 23.786 | 81843.314 | 85629.263 | -3785.949 | 558191.081 | 12.814 | 7:00 PM | -6400.174 | 342056.183 | 7.853 | 7:00 PM |
| | 8:00 PM | 14.300 | 15.380 | 22.116 | 23.786 | 79616.285 | 85629.263 | -6012.978 | 552178.102 | 12.676 | 8:00 PM | -10164.983 | 331891.201 | 7.619 | 8:00 PM |
| | 9:00 PM | 14.300 | 15.380 | 22.116 | 23.786 | 79616.285 | 85629.263 | -6012.978 | 546165.124 | 12.538 | 9:00 PM | -10164.983 | 321726.218 | 7.386 | 9:00 PM |
| | 10:00 PM | 15.400 | 15.380 | 23.817 | 23.786 | 85740.615 | 85629.263 | 111.351 | 546276.476 | 12.541 | 10:00 PM | 188.240 | 321914.458 | 7.390 | 10:00 PM |
| | 11:00 PM | 13.900 | 15.380 | 21.497 | 23.786 | 77389.256 | 85629.263 | -8240.007 | 538036.469 | 12.352 | 11:00 PM | -13929.791 | 307984.667 | 7.070 | 11:00 PM |
| | 12:00 AM | 13.700 | 15.380 | 21.188 | 23.786 | 76275.742 | 85629.263 | -9353.522 | 528682.947 | 12.137 | 12:00 AM | -15812.195 | 292172.472 | 6.707 | 12:00 AM |
| | 1:00 AM | 13.500 | 15.380 | 20.878 | 23.786 | 75162.227 | 85629.263 | -10467.036 | 518215.911 | 11.897 | 1:00 AM | -17694.599 | 274477.873 | 6.301 | 1:00 AM |
| | 2:00 AM | 14.200 | 15.380 | 21.961 | 23.786 | 79059.528 | 85629.263 | -6569.735 | 511646.176 | 11.746 | 2:00 AM | -11106.185 | 263371.688 | 6.046 | 2:00 AM |
| | 3:00 AM | 14.600 | 15.380 | 22.580 | 23.786 | 81286.557 | 85629.263 | -4342.706 | 507303.469 | 11.646 | 3:00 AM | -7341.376 | 256030.312 | 5.878 | 3:00 AM |
| | 4:00 AM | 10.700 | 15.380 | 16.548 | 23.786 | 59573.024 | 85629.263 | -26056.239 | 481247.230 | 11.048 | 4:00 AM | -44048.258 | 211982.054 | 4.866 | 4:00 AM |
| | 5:00 AM | 9.200 | 15.380 | 14.228 | 23.786 | 51221.666 | 85629.263 | -34407.597 | 446839.633 | 10.258 | 5:00 AM | -58166.289 | 153815.764 | 3.531 | 5:00 AM |
| | 6:00 AM | 8.400 | 15.380 | 12.991 | 23.786 | 46767.608 | 85629.263 | -38861.655 | 407977.978 | 9.366 | 6:00 AM | -65695.906 | 88119.858 | 2.023 | 6:00 AM |
| | 7:00 AM | 7.900 | 15.380 | 12.218 | 23.786 | 43983.822 | 85629.263 | -41645.441 | 366332.536 | 8.410 | 7:00 AM | -70401.917 | 17717.942 | 0.407 | 7:00 AM |
| | 8:00 AM | 7.500 | 15.380 | 11.599 | 23.786 | 41756.793 | 85629.263 | -43872.470 | 322460.066 | 7.403 | 8:00 AM | -74166.725 | -56448.783 | -1.296 | 8:00 AM |
| | 9:00 AM | 8.000 | 15.380 | 12.372 | 23.786 | 44540.579 | 85629.263 | -41088.684 | 281371.382 | 6.459 | 9:00 AM | -69460.714 | -125909.498 | -2.890 | 9:00 AM |
| | 10:00 AM | 10.200 | 15.380 | 15.775 | 23.786 | 56789.238 | 85629.263 | -28840.025 | 252531.357 | 5.797 | 10:00 AM | -48754.268 | -174663.766 | -4.010 | 10:00 AM |
| | 11:00 AM | 11.300 | 15.380 | 17.476 | 23.786 | 62913.568 | 85629.263 | -22715.695 | 229815.661 | 5.276 | 11:00 AM | -38401.045 | -213064.812 | -4.891 | 11:00 AM |
| | 12:00 PM | 13.500 | 15.380 | 20.878 | 23.786 | 75162.227 | 85629.263 | -10467.036 | 219348.625 | 5.036 | 12:00 PM | -17694.599 | -230759.411 | -5.298 | 12:00 PM |
| | 1:00 PM | 13.500 | 15.380 | 20.878 | 23.786 | 75162.227 | 85629.263 | -10467.036 | 208881.589 | 4.795 | 1:00 PM | -17694.599 | -248454.010 | -5.704 | 1:00 PM |
| | 2:00 PM | 15.000 | 15.380 | 23.198 | 23.786 | 83513.586 | 85629.263 | -2115.678 | 206765.912 | 4.747 | 2:00 PM | -3576.568 | -252030.578 | -5.786 | 2:00 PM |
| | 3:00 PM | 15.100 | 15.380 | 23.353 | 23.786 | 84070.343 | 85629.263 | -1558.920 | 205206.992 | 4.711 | 3:00 PM | -2635.366 | -254665.944 | -5.846 | 3:00 PM |
| | 4:00 PM | 17.100 | 15.380 | 26.446 | 23.786 | 95205.488 | 85629.263 | 9576.224 | 214783.216 | 4.931 | 4:00 PM | 16188.676 | -238477.268 | -5.475 | 4:00 PM |
| | 5:00 PM | 16.900 | 15.380 | 26.137 | 23.786 | 94091.973 | 85629.263 | 8462.710 | 223245.926 | 5.125 | 5:00 PM | 14306.272 | -224170.996 | -5.146 | 5:00 PM |
| | 6:00 PM | 14.700 | 15.380 | 22.734 | 23.786 | 81843.314 | 85629.263 | -3785.949 | 219459.977 | 5.038 | 6:00 PM | -6400.174 | -230571.170 | -5.293 | 6:00 PM |
| | 7:00 PM | 14.700 | 15.380 | 22.734 | 23.786 | 81843.314 | 85629.263 | -3785.949 | 215674.028 | 4.951 | 7:00 PM | -6400.174 | -236971.345 | -5.440 | 7:00 PM |
| | 8:00 PM | 14.300 | 15.380 | 22.116 | 23.786 | 79616.285 | 85629.263 | -6012.978 | 209661.049 | 4.813 | 8:00 PM | -10164.983 | -247136.327 | -5.673 | 8:00 PM |
| | 9:00 PM | 14.300 | 15.380 | 22.116 | 23.786 | 79616.285 | 85629.263 | -6012.978 | 203648.071 | 4.675 | 9:00 PM | -10164.983 | -257301.310 | -5.907 | 9:00 PM |
| | 10:00 PM | 15.400 | 15.380 | 23.817 | 23.786 | 85740.615 | 85629.263 | 111.351 | 203759.423 | 4.678 | 10:00 PM | 188.240 | -257113.070 | -5.903 | 10:00 PM |
| | 11:00 PM | 13.900 | 15.380 | 21.497 | 23.786 | 77389.256 | 85629.263 | -8240.007 | 195519.416 | 4.489 | 11:00 PM | -13929.791 | -271042.861 | -6.222 | 11:00 PM |
| | 12:00 AM | 13.700 | 15.380 | 21.188 | 23.786 | 76275.742 | 85629.263 | -9353.522 | 186165.894 | 4.274 | 12:00 AM | -15812.195 | -286855.056 | -6.585 | 12:00 AM |

615.200
15.380 Set Out Flow
12.817 adf

Start Date Tuesday, August 25, 2009
End Date Wednesday, August 26, 2009

Indicates Input

Starting Water Volume = 20.000 acre feet = 871200.000 cu ft

Percent Above Ave = 20%

| Time Period Ending at | Flow in mgd | Flow Out mgd | Flow In cfs | Flow Out cfs | Vol/Hour In cu ft | Vol/Hour Out cu ft | Volume Increase cu ft | Water Volume cu ft | Water Volume acre feet | Time Period Ending at | Volume Increase w/ MGD at plant = 26.000 cu ft | Water Volume cu ft | Water Volume acre feet | Time Period Ending at |
|---|---|---|---|---|---|---|---|---|---|---|---|---|---|---|
| 12:00 AM | | | | | | | | 871200.000 | 20.000 | 12:00 AM | | 871200.000 | 20.000 | 12:00 AM |
| 1:00 AM | 15.300 | 14.690 | 23.662 | 22.719 | 85183.857 | 81787.638 | 3396.219 | 874596.219 | 20.078 | 1:00 AM | 6011.007 | 877211.007 | 20.138 | 1:00 AM |
| 2:00 AM | 15.100 | 14.690 | 23.353 | 22.719 | 84070.343 | 81787.638 | 2282.705 | 876878.924 | 20.130 | 2:00 AM | 4040.185 | 881251.193 | 20.231 | 2:00 AM |
| 3:00 AM | 13.700 | 14.690 | 21.188 | 22.719 | 76275.742 | 81787.638 | -5511.897 | 871367.027 | 20.004 | 3:00 AM | -9755.569 | 871495.623 | 20.007 | 3:00 AM |
| 4:00 AM | 9.900 | 14.690 | 15.311 | 22.719 | 55118.967 | 81787.638 | -26668.672 | 844698.355 | 19.392 | 4:00 AM | -47201.189 | 824294.434 | 18.923 | 4:00 AM |
| 5:00 AM | 8.700 | 14.690 | 13.455 | 22.719 | 48437.880 | 81787.638 | -33349.759 | 811348.597 | 18.626 | 5:00 AM | -59026.121 | 765268.313 | 17.568 | 5:00 AM |
| 6:00 AM | 7.700 | 14.690 | 11.908 | 22.719 | 42870.307 | 81787.638 | -38917.331 | 772431.266 | 17.733 | 6:00 AM | -68880.232 | 696388.081 | 15.987 | 6:00 AM |
| 7:00 AM | 7.000 | 14.690 | 10.826 | 22.719 | 38973.007 | 81787.638 | -42814.632 | 729616.634 | 16.750 | 7:00 AM | -75778.109 | 620609.972 | 14.247 | 7:00 AM |
| 8:00 AM | 6.400 | 14.690 | 9.898 | 22.719 | 35632.463 | 81787.638 | -46155.175 | 683461.459 | 15.690 | 8:00 AM | -81690.575 | 538919.397 | 12.372 | 8:00 AM |
| 9:00 AM | 8.000 | 14.690 | 12.372 | 22.719 | 44540.579 | 81787.638 | -37247.059 | 646214.400 | 14.835 | 9:00 AM | -65923.999 | 472995.398 | 10.858 | 9:00 AM |
| 10:00 AM | 9.000 | 14.690 | 13.919 | 22.719 | 50108.151 | 81787.638 | -31679.487 | 614534.913 | 14.108 | 10:00 AM | -56069.888 | 416925.510 | 9.571 | 10:00 AM |
| 11:00 AM | 12.500 | 14.690 | 19.332 | 22.719 | 69594.655 | 81787.638 | -12192.984 | 602341.930 | 13.828 | 11:00 AM | -21580.502 | 395345.008 | 9.076 | 11:00 AM |
| 12:00 PM | 13.600 | 14.690 | 21.033 | 22.719 | 75718.984 | 81787.638 | -6068.654 | 596273.276 | 13.689 | 12:00 PM | -10740.980 | 384604.028 | 8.829 | 12:00 PM |
| 1:00 PM | 14.300 | 14.690 | 22.116 | 22.719 | 79616.285 | 81787.638 | -2171.353 | 594101.922 | 13.639 | 1:00 PM | -3843.103 | 380760.925 | 8.741 | 1:00 PM |
| 2:00 PM | 14.000 | 14.690 | 21.652 | 22.719 | 77946.013 | 81787.638 | -3841.625 | 590260.298 | 13.551 | 2:00 PM | -6799.336 | 373961.589 | 8.585 | 2:00 PM |
| 3:00 PM | 14.000 | 14.690 | 21.652 | 22.719 | 77946.013 | 81787.638 | -3841.625 | 586418.673 | 13.462 | 3:00 PM | -6799.336 | 367162.252 | 8.429 | 3:00 PM |
| 4:00 PM | 14.100 | 14.690 | 21.806 | 22.719 | 78502.771 | 81787.638 | -3284.868 | 583133.805 | 13.387 | 4:00 PM | -5813.925 | 361348.327 | 8.295 | 4:00 PM |
| 5:00 PM | 15.200 | 14.690 | 23.508 | 22.719 | 84627.100 | 81787.638 | 2839.462 | 585973.267 | 13.452 | 5:00 PM | 5025.596 | 366373.924 | 8.411 | 5:00 PM |
| 6:00 PM | 14.000 | 14.690 | 21.652 | 22.719 | 77946.013 | 81787.638 | -3841.625 | 582131.642 | 13.364 | 6:00 PM | -6799.336 | 359574.587 | 8.255 | 6:00 PM |
| 7:00 PM | 12.500 | 14.690 | 19.332 | 22.719 | 69594.655 | 81787.638 | -12192.984 | 569938.658 | 13.084 | 7:00 PM | -21580.502 | 337994.086 | 7.759 | 7:00 PM |
| 8:00 PM | 12.600 | 14.690 | 19.487 | 22.719 | 70151.412 | 81787.638 | -11636.226 | 558302.432 | 12.817 | 8:00 PM | -20595.091 | 317398.995 | 7.286 | 8:00 PM |
| 9:00 PM | 13.800 | 14.690 | 21.342 | 22.719 | 76832.499 | 81787.638 | -4955.139 | 553347.293 | 12.703 | 9:00 PM | -8770.158 | 308628.837 | 7.085 | 9:00 PM |
| 10:00 PM | 15.000 | 14.690 | 23.198 | 22.719 | 83513.586 | 81787.638 | 1725.947 | 555073.240 | 12.743 | 10:00 PM | 3054.774 | 311683.611 | 7.155 | 10:00 PM |
| 11:00 PM | 13.800 | 14.690 | 21.342 | 22.719 | 76832.499 | 81787.638 | -4955.139 | 550118.101 | 12.629 | 11:00 PM | -8770.158 | 302913.453 | 6.954 | 11:00 PM |
| 12:00 AM | 13.600 | 14.690 | 21.033 | 22.719 | 75718.984 | 81787.638 | -6068.654 | 544049.447 | 12.490 | 12:00 AM | -10740.980 | 292172.472 | 6.707 | 12:00 AM |
| 1:00 AM | 15.300 | 14.690 | 23.662 | 22.719 | 85183.857 | 81787.638 | 3396.219 | 547445.666 | 12.568 | 1:00 AM | 6011.007 | 298183.480 | 6.845 | 1:00 AM |
| 2:00 AM | 15.100 | 14.690 | 23.353 | 22.719 | 84070.343 | 81787.638 | 2282.705 | 549728.371 | 12.620 | 2:00 AM | 4040.185 | 302223.665 | 6.938 | 2:00 AM |
| 3:00 AM | 13.700 | 14.690 | 21.188 | 22.719 | 76275.742 | 81787.638 | -5511.897 | 544216.474 | 12.493 | 3:00 AM | -9755.569 | 292468.095 | 6.714 | 3:00 AM |
| 4:00 AM | 9.900 | 14.690 | 15.311 | 22.719 | 55118.967 | 81787.638 | -26668.672 | 517547.802 | 11.881 | 4:00 AM | -47201.189 | 245266.907 | 5.631 | 4:00 AM |
| 5:00 AM | 8.700 | 14.690 | 13.455 | 22.719 | 48437.880 | 81787.638 | -33349.759 | 484198.044 | 11.116 | 5:00 AM | -59026.121 | 186240.785 | 4.276 | 5:00 AM |
| 6:00 AM | 7.700 | 14.690 | 11.908 | 22.719 | 42870.307 | 81787.638 | -38917.331 | 445280.713 | 10.222 | 6:00 AM | -68880.232 | 117360.553 | 2.694 | 6:00 AM |
| 7:00 AM | 7.000 | 14.690 | 10.826 | 22.719 | 38973.007 | 81787.638 | -42814.632 | 402466.081 | 9.239 | 7:00 AM | -75778.109 | 41582.444 | 0.955 | 7:00 AM |
| 8:00 AM | 6.400 | 14.690 | 9.898 | 22.719 | 35632.463 | 81787.638 | -46155.175 | 356310.906 | 8.180 | 8:00 AM | -81690.575 | -40108.131 | -0.921 | 8:00 AM |
| 9:00 AM | 8.000 | 14.690 | 12.372 | 22.719 | 44540.579 | 81787.638 | -37247.059 | 319063.847 | 7.325 | 9:00 AM | -65923.999 | -106032.130 | -2.434 | 9:00 AM |
| 10:00 AM | 9.000 | 14.690 | 13.919 | 22.719 | 50108.151 | 81787.638 | -31679.487 | 287384.360 | 6.597 | 10:00 AM | -56069.888 | -162102.018 | -3.721 | 10:00 AM |
| 11:00 AM | 12.500 | 14.690 | 19.332 | 22.719 | 69594.655 | 81787.638 | -12192.984 | 275191.376 | 6.318 | 11:00 AM | -21580.502 | -183682.520 | -4.217 | 11:00 AM |
| 12:00 PM | 13.600 | 14.690 | 21.033 | 22.719 | 75718.984 | 81787.638 | -6068.654 | 269122.722 | 6.178 | 12:00 PM | -10740.980 | -194423.500 | -4.463 | 12:00 PM |
| 1:00 PM | 14.300 | 14.690 | 22.116 | 22.719 | 79616.285 | 81787.638 | -2171.353 | 266951.369 | 6.128 | 1:00 PM | -3843.103 | -198266.603 | -4.552 | 1:00 PM |
| 2:00 PM | 14.000 | 14.690 | 21.652 | 22.719 | 77946.013 | 81787.638 | -3841.625 | 263109.744 | 6.040 | 2:00 PM | -6799.336 | -205065.939 | -4.708 | 2:00 PM |
| 3:00 PM | 14.000 | 14.690 | 21.652 | 22.719 | 77946.013 | 81787.638 | -3841.625 | 259268.119 | 5.952 | 3:00 PM | -6799.336 | -211865.275 | -4.864 | 3:00 PM |
| 4:00 PM | 14.100 | 14.690 | 21.806 | 22.719 | 78502.771 | 81787.638 | -3284.868 | 255983.252 | 5.877 | 4:00 PM | -5813.925 | -217679.201 | -4.997 | 4:00 PM |
| 5:00 PM | 15.200 | 14.690 | 23.508 | 22.719 | 84627.100 | 81787.638 | 2839.462 | 258822.714 | 5.942 | 5:00 PM | 5025.596 | -212653.604 | -4.882 | 5:00 PM |
| 6:00 PM | 14.000 | 14.690 | 21.652 | 22.719 | 77946.013 | 81787.638 | -3841.625 | 254981.089 | 5.854 | 6:00 PM | -6799.336 | -219452.940 | -5.038 | 6:00 PM |
| 7:00 PM | 12.500 | 14.690 | 19.332 | 22.719 | 69594.655 | 81787.638 | -12192.984 | 242788.105 | 5.574 | 7:00 PM | -21580.502 | -241033.442 | -5.533 | 7:00 PM |
| 8:00 PM | 12.600 | 14.690 | 19.487 | 22.719 | 70151.412 | 81787.638 | -11636.226 | 231151.879 | 5.307 | 8:00 PM | -20595.091 | -261628.533 | -6.006 | 8:00 PM |
| 9:00 PM | 13.800 | 14.690 | 21.342 | 22.719 | 76832.499 | 81787.638 | -4955.139 | 226196.739 | 5.193 | 9:00 PM | -8770.158 | -270398.691 | -6.207 | 9:00 PM |
| 10:00 PM | 15.000 | 14.690 | 23.198 | 22.719 | 83513.586 | 81787.638 | 1725.947 | 227922.687 | 5.232 | 10:00 PM | 3054.774 | -267343.917 | -6.137 | 10:00 PM |
| 11:00 PM | 13.800 | 14.690 | 21.342 | 22.719 | 76832.499 | 81787.638 | -4955.139 | 222967.547 | 5.119 | 11:00 PM | -8770.158 | -276114.075 | -6.339 | 11:00 PM |
| 12:00 AM | 13.600 | 14.690 | 21.033 | 22.719 | 75718.984 | 81787.638 | -6068.654 | 216898.894 | 4.979 | 12:00 AM | -10740.980 | -286855.056 | -6.585 | 12:00 AM |

587.600
14.690 Set Out Flow
12.242 adf

Start Date Sunday, September 13, 2009
End Date Monday, September 14, 2009

Indicates Input

Starting Water Volume = 20.000 acre feet = 871200.000 cu ft

Percent Above Ave = 20%

| Time Period Ending at | Flow in mgd | Flow Out mgd | Flow In cfs | Flow Out cfs | Vol/Hour In cu ft | Vol/Hour Out cu ft | Volume Increase cu ft | Water Volume cu ft | Water Volume acre feet | Time Period Ending at | Volume Increase w/ MGD at plant = 26.000 cu ft | Water Volume cu ft | Water Volume acre feet | Time Period Ending at |
|---|---|---|---|---|---|---|---|---|---|---|---|---|---|---|
| 12:00 AM | | | | | | | | 871200.000 | 20.000 | 12:00 AM | | 871200.000 | 20.000 | 12:00 AM |
| 1:00 AM | 15.600 | 14.915 | 24.126 | 23.067 | 86854.129 | 83040.342 | 3813.787 | 875013.787 | 20.088 | 1:00 AM | 6648.238 | 877848.238 | 20.153 | 1:00 AM |
| 2:00 AM | 13.800 | 14.915 | 21.342 | 23.067 | 76832.499 | 83040.342 | -6207.843 | 868805.944 | 19.945 | 2:00 AM | -10821.584 | 867026.654 | 19.904 | 2:00 AM |
| 3:00 AM | 12.300 | 14.915 | 19.023 | 23.067 | 68481.140 | 83040.342 | -14559.202 | 854246.742 | 19.611 | 3:00 AM | -25379.768 | 841646.885 | 19.322 | 3:00 AM |
| 4:00 AM | 11.000 | 14.915 | 17.012 | 23.067 | 61243.296 | 83040.342 | -21797.046 | 832449.696 | 19.110 | 4:00 AM | -37996.862 | 803650.024 | 18.449 | 4:00 AM |
| 5:00 AM | 9.700 | 14.915 | 15.002 | 23.067 | 54005.452 | 83040.342 | -29034.890 | 803414.806 | 18.444 | 5:00 AM | -50613.955 | 753036.069 | 17.287 | 5:00 AM |
| 6:00 AM | 8.600 | 14.915 | 13.300 | 23.067 | 47881.122 | 83040.342 | -35159.220 | 768255.587 | 17.637 | 6:00 AM | -61289.957 | 691746.111 | 15.880 | 6:00 AM |
| 7:00 AM | 5.700 | 14.915 | 8.815 | 23.067 | 31735.163 | 83040.342 | -51305.180 | 716950.407 | 16.459 | 7:00 AM | -89435.781 | 602310.331 | 13.827 | 7:00 AM |
| 8:00 AM | 5.400 | 14.915 | 8.351 | 23.067 | 30064.891 | 83040.342 | -52975.451 | 663974.956 | 15.243 | 8:00 AM | -92347.417 | 509962.913 | 11.707 | 8:00 AM |
| 9:00 AM | 7.000 | 14.915 | 10.826 | 23.067 | 38973.007 | 83040.342 | -44067.335 | 619907.620 | 14.231 | 9:00 AM | -76818.687 | 433144.226 | 9.944 | 9:00 AM |
| 10:00 AM | 5.900 | 14.915 | 9.125 | 23.067 | 32848.677 | 83040.342 | -50191.665 | 569715.955 | 13.079 | 10:00 AM | -87494.689 | 345649.537 | 7.935 | 10:00 AM |
| 11:00 AM | 8.900 | 14.915 | 13.764 | 23.067 | 49551.394 | 83040.342 | -33488.948 | 536227.008 | 12.310 | 11:00 AM | -58378.320 | 287271.217 | 6.595 | 11:00 AM |
| 12:00 PM | 9.300 | 14.915 | 14.383 | 23.067 | 51778.423 | 83040.342 | -31261.919 | 504965.089 | 11.592 | 12:00 PM | -54496.138 | 232775.079 | 5.344 | 12:00 PM |
| 1:00 PM | 13.700 | 14.915 | 21.188 | 23.067 | 76275.742 | 83040.342 | -6764.600 | 498200.488 | 11.437 | 1:00 PM | -11792.130 | 220982.950 | 5.073 | 1:00 PM |
| 2:00 PM | 15.300 | 14.915 | 23.662 | 23.067 | 85183.857 | 83040.342 | 2143.515 | 500344.004 | 11.486 | 2:00 PM | 3736.601 | 224719.550 | 5.159 | 2:00 PM |
| 3:00 PM | 16.100 | 14.915 | 24.899 | 23.067 | 89637.915 | 83040.342 | 6597.573 | 506941.577 | 11.638 | 3:00 PM | 11500.966 | 236220.516 | 5.423 | 3:00 PM |
| 4:00 PM | 16.400 | 14.915 | 25.363 | 23.067 | 91308.187 | 83040.342 | 8267.845 | 515209.422 | 11.828 | 4:00 PM | 14412.603 | 250633.119 | 5.754 | 4:00 PM |
| 5:00 PM | 18.400 | 14.915 | 28.456 | 23.067 | 102443.332 | 83040.342 | 19402.990 | 534612.412 | 12.273 | 5:00 PM | 33823.515 | 284456.634 | 6.530 | 5:00 PM |
| 6:00 PM | 16.900 | 14.915 | 26.137 | 23.067 | 94091.973 | 83040.342 | 11051.631 | 545664.043 | 12.527 | 6:00 PM | 19265.331 | 303721.965 | 6.972 | 6:00 PM |
| 7:00 PM | 14.700 | 14.915 | 22.734 | 23.067 | 81843.314 | 83040.342 | -1197.028 | 544467.015 | 12.499 | 7:00 PM | -2086.673 | 301635.292 | 6.925 | 7:00 PM |
| 8:00 PM | 14.400 | 14.915 | 22.270 | 23.067 | 80173.042 | 83040.342 | -2867.300 | 541599.715 | 12.433 | 8:00 PM | -4998.310 | 296636.982 | 6.810 | 8:00 PM |
| 9:00 PM | 14.200 | 14.915 | 21.961 | 23.067 | 79059.528 | 83040.342 | -3980.814 | 537618.901 | 12.342 | 9:00 PM | -6939.401 | 289697.581 | 6.651 | 9:00 PM |
| 10:00 PM | 14.300 | 14.915 | 22.116 | 23.067 | 79616.285 | 83040.342 | -3424.057 | 534194.844 | 12.263 | 10:00 PM | -5968.856 | 283728.725 | 6.514 | 10:00 PM |
| 11:00 PM | 14.300 | 14.915 | 22.116 | 23.067 | 79616.285 | 83040.342 | -3424.057 | 530770.787 | 12.185 | 11:00 PM | -5968.856 | 277759.869 | 6.376 | 11:00 PM |
| 12:00 AM | 16.400 | 14.915 | 25.363 | 23.067 | 91308.187 | 83040.342 | 8267.845 | 539038.632 | 12.375 | 12:00 AM | 14412.603 | 292172.472 | 6.707 | 12:00 AM |
| 1:00 AM | 15.600 | 14.915 | 24.126 | 23.067 | 86854.129 | 83040.342 | 3813.787 | 542852.419 | 12.462 | 1:00 AM | 6648.238 | 298820.710 | 6.860 | 1:00 AM |
| 2:00 AM | 13.800 | 14.915 | 21.342 | 23.067 | 76832.499 | 83040.342 | -6207.843 | 536644.576 | 12.320 | 2:00 AM | -10821.584 | 287999.126 | 6.612 | 2:00 AM |
| 3:00 AM | 12.300 | 14.915 | 19.023 | 23.067 | 68481.140 | 83040.342 | -14559.202 | 522085.374 | 11.985 | 3:00 AM | -25379.768 | 262619.357 | 6.029 | 3:00 AM |
| 4:00 AM | 11.000 | 14.915 | 17.012 | 23.067 | 61243.296 | 83040.342 | -21797.046 | 500288.328 | 11.485 | 4:00 AM | -37996.862 | 224622.496 | 5.157 | 4:00 AM |
| 5:00 AM | 9.700 | 14.915 | 15.002 | 23.067 | 54005.452 | 83040.342 | -29034.890 | 471253.438 | 10.818 | 5:00 AM | -50613.955 | 174008.541 | 3.995 | 5:00 AM |
| 6:00 AM | 8.600 | 14.915 | 13.300 | 23.067 | 47881.122 | 83040.342 | -35159.220 | 436094.218 | 10.011 | 6:00 AM | -61289.957 | 112718.584 | 2.588 | 6:00 AM |
| 7:00 AM | 5.700 | 14.915 | 8.815 | 23.067 | 31735.163 | 83040.342 | -51305.180 | 384789.039 | 8.834 | 7:00 AM | -89435.781 | 23282.803 | 0.534 | 7:00 AM |
| 8:00 AM | 5.400 | 14.915 | 8.351 | 23.067 | 30064.891 | 83040.342 | -52975.451 | 331813.588 | 7.617 | 8:00 AM | -92347.417 | -69064.614 | -1.586 | 8:00 AM |
| 9:00 AM | 7.000 | 14.915 | 10.826 | 23.067 | 38973.007 | 83040.342 | -44067.335 | 287746.252 | 6.606 | 9:00 AM | -76818.687 | -145883.302 | -3.349 | 9:00 AM |
| 10:00 AM | 5.900 | 14.915 | 9.125 | 23.067 | 32848.677 | 83040.342 | -50191.665 | 237554.587 | 5.454 | 10:00 AM | -87494.689 | -233377.991 | -5.358 | 10:00 AM |
| 11:00 AM | 8.900 | 14.915 | 13.764 | 23.067 | 49551.394 | 83040.342 | -33488.948 | 204065.639 | 4.685 | 11:00 AM | -58378.320 | -291756.311 | -6.698 | 11:00 AM |
| 12:00 PM | 9.300 | 14.915 | 14.383 | 23.067 | 51778.423 | 83040.342 | -31261.919 | 172803.720 | 3.967 | 12:00 PM | -54496.138 | -346252.449 | -7.949 | 12:00 PM |
| 1:00 PM | 13.700 | 14.915 | 21.188 | 23.067 | 76275.742 | 83040.342 | -6764.600 | 166039.120 | 3.812 | 1:00 PM | -11792.130 | -358044.578 | -8.220 | 1:00 PM |
| 2:00 PM | 15.300 | 14.915 | 23.662 | 23.067 | 85183.857 | 83040.342 | 2143.515 | 168182.635 | 3.861 | 2:00 PM | 3736.601 | -354307.978 | -8.134 | 2:00 PM |
| 3:00 PM | 16.100 | 14.915 | 24.899 | 23.067 | 89637.915 | 83040.342 | 6597.573 | 174780.208 | 4.012 | 3:00 PM | 11500.966 | -342807.012 | -7.870 | 3:00 PM |
| 4:00 PM | 16.400 | 14.915 | 25.363 | 23.067 | 91308.187 | 83040.342 | 8267.845 | 183048.053 | 4.202 | 4:00 PM | 14412.603 | -328394.409 | -7.539 | 4:00 PM |
| 5:00 PM | 18.400 | 14.915 | 28.456 | 23.067 | 102443.332 | 83040.342 | 19402.990 | 202451.043 | 4.648 | 5:00 PM | 33823.515 | -294570.894 | -6.762 | 5:00 PM |
| 6:00 PM | 16.900 | 14.915 | 26.137 | 23.067 | 94091.973 | 83040.342 | 11051.631 | 213502.674 | 4.901 | 6:00 PM | 19265.331 | -275305.563 | -6.320 | 6:00 PM |
| 7:00 PM | 14.700 | 14.915 | 22.734 | 23.067 | 81843.314 | 83040.342 | -1197.028 | 212305.646 | 4.874 | 7:00 PM | -2086.673 | -277392.236 | -6.368 | 7:00 PM |
| 8:00 PM | 14.400 | 14.915 | 22.270 | 23.067 | 80173.042 | 83040.342 | -2867.300 | 209438.347 | 4.808 | 8:00 PM | -4998.310 | -282390.546 | -6.483 | 8:00 PM |
| 9:00 PM | 14.200 | 14.915 | 21.961 | 23.067 | 79059.528 | 83040.342 | -3980.814 | 205457.532 | 4.717 | 9:00 PM | -6939.401 | -289329.947 | -6.642 | 9:00 PM |
| 10:00 PM | 14.300 | 14.915 | 22.116 | 23.067 | 79616.285 | 83040.342 | -3424.057 | 202033.475 | 4.638 | 10:00 PM | -5968.856 | -295298.803 | -6.779 | 10:00 PM |
| 11:00 PM | 14.300 | 14.915 | 22.116 | 23.067 | 79616.285 | 83040.342 | -3424.057 | 198609.418 | 4.559 | 11:00 PM | -5968.856 | -301267.658 | -6.916 | 11:00 PM |
| 12:00 AM | 16.400 | 14.915 | 25.363 | 23.067 | 91308.187 | 83040.342 | 8267.845 | 206877.263 | 4.749 | 12:00 AM | 14412.603 | -286855.056 | -6.585 | 12:00 AM |

596.600
14.915 Set Out Flow
12.429 adf

Start Date Monday, October 19, 2009
End Date Tuesday, October 20, 2009

Indicates Input

Starting Water Volume = 20.000 acre feet = 871200.000 cu ft

| Percent Above Ave = | 20% | Flow in | Flow Out | Flow In | Flow Out | Vol/Hour In | Vol/Hour Out | Volume Increase | Water Volume | Water Volume | | Volume Increase w/ MGD at plant = 26.000 | Water Volume | Water Volume | |
|---|---|---|---|---|---|---|---|---|---|---|---|---|---|---|---|
| | Time Period Ending at | mgd | mgd | cfs | cfs | cu ft | cu ft | cu ft | cu ft | acre feet | Time Period Ending at | cu ft | cu ft | acre feet | Time Period Ending at |
| | 12:00 AM | | | | | | | | 871200.000 | 20.000 | 12:00 AM | | 871200.000 | 20.000 | 12:00 AM |
| | 1:00 AM | 15.500 | 14.390 | 23.971 | 22.255 | 86297.372 | 80117.367 | 6180.005 | 877380.005 | 20.142 | 1:00 AM | 11166.097 | 882366.097 | 20.256 | 1:00 AM |
| | 2:00 AM | 14.700 | 14.390 | 22.734 | 22.255 | 81843.314 | 80117.367 | 1725.947 | 879105.953 | 20.181 | 2:00 AM | 3118.460 | 885484.557 | 20.328 | 2:00 AM |
| | 3:00 AM | 11.700 | 14.390 | 18.095 | 22.255 | 65140.597 | 80117.367 | -14976.770 | 864129.183 | 19.838 | 3:00 AM | -27060.182 | 858424.375 | 19.707 | 3:00 AM |
| | 4:00 AM | 9.600 | 14.390 | 14.847 | 22.255 | 53448.695 | 80117.367 | -26668.672 | 837460.511 | 19.225 | 4:00 AM | -48185.230 | 810239.145 | 18.601 | 4:00 AM |
| | 5:00 AM | 8.200 | 14.390 | 12.682 | 22.255 | 45654.094 | 80117.367 | -34463.273 | 802997.238 | 18.434 | 5:00 AM | -62268.596 | 747970.549 | 17.171 | 5:00 AM |
| | 6:00 AM | 7.400 | 14.390 | 11.444 | 22.255 | 41200.036 | 80117.367 | -38917.331 | 764079.907 | 17.541 | 6:00 AM | -70316.234 | 677654.315 | 15.557 | 6:00 AM |
| | 7:00 AM | 6.500 | 14.390 | 10.053 | 22.255 | 36189.220 | 80117.367 | -43928.146 | 720151.761 | 16.532 | 7:00 AM | -79369.826 | 598284.489 | 13.735 | 7:00 AM |
| | 8:00 AM | 6.400 | 14.390 | 9.898 | 22.255 | 35632.463 | 80117.367 | -44484.903 | 675666.858 | 15.511 | 8:00 AM | -80375.781 | 517908.708 | 11.890 | 8:00 AM |
| | 9:00 AM | 8.000 | 14.390 | 12.372 | 22.255 | 44540.579 | 80117.367 | -35576.788 | 640090.070 | 14.694 | 9:00 AM | -64280.506 | 453628.202 | 10.414 | 9:00 AM |
| | 10:00 AM | 8.800 | 14.390 | 13.610 | 22.255 | 48994.637 | 80117.367 | -31122.730 | 608967.341 | 13.980 | 10:00 AM | -56232.868 | 397395.334 | 9.123 | 10:00 AM |
| | 11:00 AM | 11.500 | 14.390 | 17.785 | 22.255 | 64027.082 | 80117.367 | -16090.284 | 592877.057 | 13.611 | 11:00 AM | -29072.091 | 368323.243 | 8.456 | 11:00 AM |
| | 12:00 PM | 13.700 | 14.390 | 21.188 | 22.255 | 76275.742 | 80117.367 | -3841.625 | 589035.432 | 13.522 | 12:00 PM | -6941.087 | 361382.156 | 8.296 | 12:00 PM |
| | 1:00 PM | 14.100 | 14.390 | 21.806 | 22.255 | 78502.771 | 80117.367 | -1614.596 | 587420.836 | 13.485 | 1:00 PM | -2917.269 | 358464.887 | 8.229 | 1:00 PM |
| | 2:00 PM | 14.200 | 14.390 | 21.961 | 22.255 | 79059.528 | 80117.367 | -1057.839 | 586362.997 | 13.461 | 2:00 PM | -1911.314 | 356553.573 | 8.185 | 2:00 PM |
| | 3:00 PM | 14.300 | 14.390 | 22.116 | 22.255 | 79616.285 | 80117.367 | -501.082 | 585861.915 | 13.450 | 3:00 PM | -905.359 | 355648.214 | 8.165 | 3:00 PM |
| | 4:00 PM | 14.700 | 14.390 | 22.734 | 22.255 | 81843.314 | 80117.367 | 1725.947 | 587587.863 | 13.489 | 4:00 PM | 3118.460 | 358766.674 | 8.236 | 4:00 PM |
| | 5:00 PM | 14.100 | 14.390 | 21.806 | 22.255 | 78502.771 | 80117.367 | -1614.596 | 585973.267 | 13.452 | 5:00 PM | -2917.269 | 355849.405 | 8.169 | 5:00 PM |
| | 6:00 PM | 13.500 | 14.390 | 20.878 | 22.255 | 75162.227 | 80117.367 | -4955.139 | 581018.127 | 13.338 | 6:00 PM | -8952.997 | 346896.408 | 7.964 | 6:00 PM |
| | 7:00 PM | 13.000 | 14.390 | 20.105 | 22.255 | 72378.441 | 80117.367 | -7738.926 | 573279.202 | 13.161 | 7:00 PM | -13982.770 | 332913.638 | 7.643 | 7:00 PM |
| | 8:00 PM | 13.000 | 14.390 | 20.105 | 22.255 | 72378.441 | 80117.367 | -7738.926 | 565540.276 | 12.983 | 8:00 PM | -13982.770 | 318930.867 | 7.322 | 8:00 PM |
| | 9:00 PM | 13.100 | 14.390 | 20.260 | 22.255 | 72935.198 | 80117.367 | -7182.168 | 558358.108 | 12.818 | 9:00 PM | -12976.816 | 305954.052 | 7.024 | 9:00 PM |
| | 10:00 PM | 13.700 | 14.390 | 21.188 | 22.255 | 76275.742 | 80117.367 | -3841.625 | 554516.483 | 12.730 | 10:00 PM | -6941.087 | 299012.964 | 6.864 | 10:00 PM |
| | 11:00 PM | 14.100 | 14.390 | 21.806 | 22.255 | 78502.771 | 80117.367 | -1614.596 | 552901.887 | 12.693 | 11:00 PM | -2917.269 | 296095.696 | 6.797 | 11:00 PM |
| | 12:00 AM | 14.000 | 14.390 | 21.652 | 22.255 | 77946.013 | 80117.367 | -2171.353 | 550730.534 | 12.643 | 12:00 AM | -3923.223 | 292172.472 | 6.707 | 12:00 AM |
| | 1:00 AM | 15.500 | 14.390 | 23.971 | 22.255 | 86297.372 | 80117.367 | 6180.005 | 556910.539 | 12.785 | 1:00 AM | 11166.097 | 303338.569 | 6.964 | 1:00 AM |
| | 2:00 AM | 14.700 | 14.390 | 22.734 | 22.255 | 81843.314 | 80117.367 | 1725.947 | 558636.486 | 12.825 | 2:00 AM | 3118.460 | 306457.029 | 7.035 | 2:00 AM |
| | 3:00 AM | 11.700 | 14.390 | 18.095 | 22.255 | 65140.597 | 80117.367 | -14976.770 | 543659.717 | 12.481 | 3:00 AM | -27060.182 | 279396.847 | 6.414 | 3:00 AM |
| | 4:00 AM | 9.600 | 14.390 | 14.847 | 22.255 | 53448.695 | 80117.367 | -26668.672 | 516991.045 | 11.868 | 4:00 AM | -48185.230 | 231211.617 | 5.308 | 4:00 AM |
| | 5:00 AM | 8.200 | 14.390 | 12.682 | 22.255 | 45654.094 | 80117.367 | -34463.273 | 482527.772 | 11.077 | 5:00 AM | -62268.596 | 168943.021 | 3.878 | 5:00 AM |
| | 6:00 AM | 7.400 | 14.390 | 11.444 | 22.255 | 41200.036 | 80117.367 | -38917.331 | 443610.441 | 10.184 | 6:00 AM | -70316.234 | 98626.787 | 2.264 | 6:00 AM |
| | 7:00 AM | 6.500 | 14.390 | 10.053 | 22.255 | 36189.220 | 80117.367 | -43928.146 | 399682.295 | 9.175 | 7:00 AM | -79369.826 | 19256.961 | 0.442 | 7:00 AM |
| | 8:00 AM | 6.400 | 14.390 | 9.898 | 22.255 | 35632.463 | 80117.367 | -44484.903 | 355197.392 | 8.154 | 8:00 AM | -80375.781 | -61118.820 | -1.403 | 8:00 AM |
| | 9:00 AM | 8.000 | 14.390 | 12.372 | 22.255 | 44540.579 | 80117.367 | -35576.788 | 319620.604 | 7.337 | 9:00 AM | -64280.506 | -125399.326 | -2.879 | 9:00 AM |
| | 10:00 AM | 8.800 | 14.390 | 13.610 | 22.255 | 48994.637 | 80117.367 | -31122.730 | 288497.874 | 6.623 | 10:00 AM | -56232.868 | -181632.194 | -4.170 | 10:00 AM |
| | 11:00 AM | 11.500 | 14.390 | 17.785 | 22.255 | 64027.082 | 80117.367 | -16090.284 | 272407.590 | 6.254 | 11:00 AM | -29072.091 | -210704.285 | -4.837 | 11:00 AM |
| | 12:00 PM | 13.700 | 14.390 | 21.188 | 22.255 | 76275.742 | 80117.367 | -3841.625 | 268565.965 | 6.165 | 12:00 PM | -6941.087 | -217645.372 | -4.996 | 12:00 PM |
| | 1:00 PM | 14.100 | 14.390 | 21.806 | 22.255 | 78502.771 | 80117.367 | -1614.596 | 266951.369 | 6.128 | 1:00 PM | -2917.269 | -220562.641 | -5.063 | 1:00 PM |
| | 2:00 PM | 14.200 | 14.390 | 21.961 | 22.255 | 79059.528 | 80117.367 | -1057.839 | 265893.531 | 6.104 | 2:00 PM | -1911.314 | -222473.955 | -5.107 | 2:00 PM |
| | 3:00 PM | 14.300 | 14.390 | 22.116 | 22.255 | 79616.285 | 80117.367 | -501.082 | 265392.449 | 6.093 | 3:00 PM | -905.359 | -223379.314 | -5.128 | 3:00 PM |
| | 4:00 PM | 14.700 | 14.390 | 22.734 | 22.255 | 81843.314 | 80117.367 | 1725.947 | 267118.396 | 6.132 | 4:00 PM | 3118.460 | -220260.854 | -5.056 | 4:00 PM |
| | 5:00 PM | 14.100 | 14.390 | 21.806 | 22.255 | 78502.771 | 80117.367 | -1614.596 | 265503.800 | 6.095 | 5:00 PM | -2917.269 | -223178.123 | -5.123 | 5:00 PM |
| | 6:00 PM | 13.500 | 14.390 | 20.878 | 22.255 | 75162.227 | 80117.367 | -4955.139 | 260548.661 | 5.981 | 6:00 PM | -8952.997 | -232131.120 | -5.329 | 6:00 PM |
| | 7:00 PM | 13.000 | 14.390 | 20.105 | 22.255 | 72378.441 | 80117.367 | -7738.926 | 252809.735 | 5.804 | 7:00 PM | -13982.770 | -246113.890 | -5.650 | 7:00 PM |
| | 8:00 PM | 13.000 | 14.390 | 20.105 | 22.255 | 72378.441 | 80117.367 | -7738.926 | 245070.810 | 5.626 | 8:00 PM | -13982.770 | -260096.661 | -5.971 | 8:00 PM |
| | 9:00 PM | 13.100 | 14.390 | 20.260 | 22.255 | 72935.198 | 80117.367 | -7182.168 | 237888.641 | 5.461 | 9:00 PM | -12976.816 | -273073.476 | -6.269 | 9:00 PM |
| | 10:00 PM | 13.700 | 14.390 | 21.188 | 22.255 | 76275.742 | 80117.367 | -3841.625 | 234047.016 | 5.373 | 10:00 PM | -6941.087 | -280014.564 | -6.428 | 10:00 PM |
| | 11:00 PM | 14.100 | 14.390 | 21.806 | 22.255 | 78502.771 | 80117.367 | -1614.596 | 232432.420 | 5.336 | 11:00 PM | -2917.269 | -282931.832 | -6.495 | 11:00 PM |
| | 12:00 AM | 14.000 | 14.390 | 21.652 | 22.255 | 77946.013 | 80117.367 | -2171.353 | 230261.067 | 5.286 | 12:00 AM | -3923.223 | -286855.056 | -6.585 | 12:00 AM |

575.600
14.390 Set Out Flow
11.992 adf

Exhibit J

Outflow set @ -20% above or below average daily flow (Positive is More Flow and Negative is Less Flow) Future Design Ave Flow= 26.000 MGD

| Flows Based on Present Operations | | | Basin Volumes based on Present | | | Basin Volumes with Flow Ratio'd to Design Flow | | |
|---|---|---|---|---|---|---|---|---|
| July 14, 2009 to July 15, 2009 Flows | | | July 14, 2009 to July 15, 2009 Flows | | | July 14, 2009 to July 15, 2009 Flows | | |
| | | | calc'ed High to Low= | 7.863 | | calc'ed High to Low= | 19.939 | |
| Set Flow= | 10.253 mgd | 12:00 AM | Start Volume= | 20.000 acre feet | 12:00 AM | Start Volume= | 20.000 acre feet | |
| ADF= | 12.817 mgd | 12:00 AM | High Volume= | 27.863 acre feet | 12:00 AM | High Volume= | 39.939 acre feet | |
| | | 12:00 AM | Low Volume= | 20.000 acre feet | 12:00 AM | Low Volume= | 20.000 acre feet | |
| August 25, 2009 to Aug 26, 2009 Flows | | | August 25, 2009 to Aug 26, 2009 Flows | | | August 25, 2009 to Aug 26, 2009 Flows | | |
| | | | calc'ed High to Low= | 7.510 | | calc'ed High to Low= | 19.939 | |
| Set Flow= | 9.793 mgd | 12:00 AM | Start Volume= | 20.000 acre feet | 12:00 AM | Start Volume= | 20.000 acre feet | |
| ADF= | 12.242 mgd | 12:00 AM | High Volume= | 27.510 acre feet | 12:00 AM | High Volume= | 39.939 acre feet | |
| | | 12:00 AM | Low Volume= | 20.000 acre feet | 12:00 AM | Low Volume= | 20.000 acre feet | |
| Sept 13, 2009 to Sept 14, 2009 Flows | | | Sept 13, 2009 to Sept 14, 2009 Flows | | | Sept 13, 2009 to Sept 14, 2009 Flows | | |
| | | | calc'ed High to Low= | 8.408 | | calc'ed High to Low= | 21.984 | |
| Set Flow= | 9.943 mgd | 12:00 AM | Start Volume= | 20.000 acre feet | 12:00 AM | Start Volume= | 20.000 acre feet | |
| ADF= | 12.429 mgd | 12:00 AM | High Volume= | 27.625 acre feet | 12:00 AM | High Volume= | 39.939 acre feet | |
| | | 12:00 PM | Low Volume= | 19.218 acre feet | 12:00 PM | Low Volume= | 17.955 acre feet | |
| Oct 19, 2009 to Oct 20, 2009 Flows | | | Oct 19, 2009 to Oct 20, 2009 Flows | | | Oct 19, 2009 to Oct 20, 2009 Flows | | |
| | | | calc'ed High to Low= | 7.357 acre feet | | calc'ed High to Low= | 19.939 acre feet | |
| Set Flow= | 9.593 mgd | 12:00 AM | Start Volume= | 20.000 acre feet | 12:00 AM | Start Volume= | 20.000 acre feet | |
| ADF= | 11.992 mgd | 12:00 AM | High Volume= | 27.357 acre feet | 12:00 AM | High Volume= | 39.939 acre feet | |
| | | 12:00 AM | Low Volume= | 20.000 acre feet | 12:00 AM | Low Volume= | 20.000 acre feet | |

Start Date Tuesday, July 14, 2009
End Date Wednesday, July 15, 2009

Indicates Input

Starting Water Volume = 40.000 acre feet = 1742400.000 cu ft

| Percent Above Ave = | -20% | Flow in | Flow Out | Flow In | Flow Out | Vol/Hour In | Vol/Hour Out | Volume Increase | Water Volume | Water Volume | Volume Increase w/ MGD at plant = 22.000 | Water Volume | Water Volume | |
|---|---|---|---|---|---|---|---|---|---|---|---|---|---|---|
| | Time Period Ending at | mgd | mgd | cfs | cfs | cu ft | cu ft | cu ft | cu ft | acre feet | Time Period Ending at | cu ft | cu ft | acre feet | Time Period Ending at |
| | 12:00 AM | | | | | | | | 1742400.000 | 40.000 | 12:00 AM | | 1742400.000 | 40.000 | 12:00 AM |
| | 1:00 AM | 13.500 | 10.253 | 20.878 | 15.857 | 75162.227 | 57086.176 | 18076.052 | 1760476.052 | 40.415 | 1:00 AM | 38784.766 | 1781184.766 | 40.890 | 1:00 AM |
| | 2:00 AM | 14.200 | 10.253 | 21.961 | 15.857 | 79059.528 | 57086.176 | 21973.352 | 1782449.404 | 40.919 | 2:00 AM | 47146.985 | 1828331.751 | 41.973 | 2:00 AM |
| | 3:00 AM | 14.600 | 10.253 | 22.580 | 15.857 | 81286.557 | 57086.176 | 24200.381 | 1806649.785 | 41.475 | 3:00 AM | 51925.395 | 1880257.147 | 43.165 | 3:00 AM |
| | 4:00 AM | 10.700 | 10.253 | 16.548 | 15.857 | 59573.024 | 57086.176 | 2486.849 | 1809136.634 | 41.532 | 4:00 AM | 5335.892 | 1885593.038 | 43.287 | 4:00 AM |
| | 5:00 AM | 9.200 | 10.253 | 14.228 | 15.857 | 51221.666 | 57086.176 | -5864.510 | 1803272.125 | 41.397 | 5:00 AM | -12583.148 | 1873009.890 | 42.998 | 5:00 AM |
| | 6:00 AM | 8.400 | 10.253 | 12.991 | 15.857 | 46767.608 | 57086.176 | -10318.567 | 1792953.557 | 41.161 | 6:00 AM | -22139.969 | 1850869.921 | 42.490 | 6:00 AM |
| | 7:00 AM | 7.900 | 10.253 | 12.218 | 15.857 | 43983.822 | 57086.176 | -13102.354 | 1779851.204 | 40.860 | 7:00 AM | -28112.983 | 1822756.939 | 41.845 | 7:00 AM |
| | 8:00 AM | 7.500 | 10.253 | 11.599 | 15.857 | 41756.793 | 57086.176 | -15329.383 | 1764521.821 | 40.508 | 8:00 AM | -32891.393 | 1789865.546 | 41.090 | 8:00 AM |
| | 9:00 AM | 8.000 | 10.253 | 12.372 | 15.857 | 44540.579 | 57086.176 | -12545.596 | 1751976.224 | 40.220 | 9:00 AM | -26918.380 | 1762947.166 | 40.472 | 9:00 AM |
| | 10:00 AM | 10.200 | 10.253 | 15.775 | 15.857 | 56789.238 | 57086.176 | -296.937 | 1751679.287 | 40.213 | 10:00 AM | -637.121 | 1762310.044 | 40.457 | 10:00 AM |
| | 11:00 AM | 11.300 | 10.253 | 17.476 | 15.857 | 62913.568 | 57086.176 | 5827.392 | 1757506.680 | 40.347 | 11:00 AM | 12503.508 | 1774813.552 | 40.744 | 11:00 AM |
| | 12:00 PM | 13.500 | 10.253 | 20.878 | 15.857 | 75162.227 | 57086.176 | 18076.052 | 1775582.731 | 40.762 | 12:00 PM | 38784.766 | 1813598.318 | 41.634 | 12:00 PM |
| | 1:00 PM | 13.500 | 10.253 | 20.878 | 15.857 | 75162.227 | 57086.176 | 18076.052 | 1793658.783 | 41.177 | 1:00 PM | 38784.766 | 1852383.085 | 42.525 | 1:00 PM |
| | 2:00 PM | 15.000 | 10.253 | 23.198 | 15.857 | 83513.586 | 57086.176 | 26427.410 | 1820086.193 | 41.783 | 2:00 PM | 56703.806 | 1909086.891 | 43.827 | 2:00 PM |
| | 3:00 PM | 15.100 | 10.253 | 23.353 | 15.857 | 84070.343 | 57086.176 | 26984.167 | 1847070.361 | 42.403 | 3:00 PM | 57898.409 | 1966985.300 | 45.156 | 3:00 PM |
| | 4:00 PM | 17.100 | 10.253 | 26.446 | 15.857 | 95205.488 | 57086.176 | 38119.312 | 1885189.673 | 43.278 | 4:00 PM | 81790.462 | 2048775.761 | 47.033 | 4:00 PM |
| | 5:00 PM | 16.900 | 10.253 | 26.137 | 15.857 | 94091.973 | 57086.176 | 37005.798 | 1922195.471 | 44.128 | 5:00 PM | 79401.257 | 2128177.018 | 48.856 | 5:00 PM |
| | 6:00 PM | 14.700 | 10.253 | 22.734 | 15.857 | 81843.314 | 57086.176 | 24757.139 | 1946952.609 | 44.696 | 6:00 PM | 53119.998 | 2181297.016 | 50.076 | 6:00 PM |
| | 7:00 PM | 14.700 | 10.253 | 22.734 | 15.857 | 81843.314 | 57086.176 | 24757.139 | 1971709.748 | 45.264 | 7:00 PM | 53119.998 | 2234417.014 | 51.295 | 7:00 PM |
| | 8:00 PM | 14.300 | 10.253 | 22.116 | 15.857 | 79616.285 | 57086.176 | 22530.110 | 1994239.857 | 45.781 | 8:00 PM | 48341.588 | 2282758.602 | 52.405 | 8:00 PM |
| | 9:00 PM | 14.300 | 10.253 | 22.116 | 15.857 | 79616.285 | 57086.176 | 22530.110 | 2016769.967 | 46.299 | 9:00 PM | 48341.588 | 2331100.189 | 53.515 | 9:00 PM |
| | 10:00 PM | 15.400 | 10.253 | 23.817 | 15.857 | 85740.615 | 57086.176 | 28654.439 | 2045424.406 | 46.956 | 10:00 PM | 61482.217 | 2392582.406 | 54.926 | 10:00 PM |
| | 11:00 PM | 13.900 | 10.253 | 21.497 | 15.857 | 77389.256 | 57086.176 | 20303.081 | 2065727.487 | 47.423 | 11:00 PM | 43563.177 | 2436145.583 | 55.926 | 11:00 PM |
| | 12:00 AM | 13.700 | 10.253 | 21.188 | 15.857 | 76275.742 | 57086.176 | 19189.566 | 2084917.053 | 47.863 | 12:00 AM | 41173.972 | 2477319.555 | 56.871 | 12:00 AM |
| | 1:00 AM | 13.500 | 10.253 | 20.878 | 15.857 | 75162.227 | 57086.176 | 18076.052 | 2102993.105 | 48.278 | 1:00 AM | 38784.766 | 2516104.321 | 57.762 | 1:00 AM |
| | 2:00 AM | 14.200 | 10.253 | 21.961 | 15.857 | 79059.528 | 57086.176 | 21973.352 | 2124966.457 | 48.783 | 2:00 AM | 47146.985 | 2563251.306 | 58.844 | 2:00 AM |
| | 3:00 AM | 14.600 | 10.253 | 22.580 | 15.857 | 81286.557 | 57086.176 | 24200.381 | 2149166.838 | 49.338 | 3:00 AM | 51925.395 | 2615176.701 | 60.036 | 3:00 AM |
| | 4:00 AM | 10.700 | 10.253 | 16.548 | 15.857 | 59573.024 | 57086.176 | 2486.849 | 2151653.687 | 49.395 | 4:00 AM | 5335.892 | 2620512.593 | 60.159 | 4:00 AM |
| | 5:00 AM | 9.200 | 10.253 | 14.228 | 15.857 | 51221.666 | 57086.176 | -5864.510 | 2145789.178 | 49.261 | 5:00 AM | -12583.148 | 2607929.445 | 59.870 | 5:00 AM |
| | 6:00 AM | 8.400 | 10.253 | 12.991 | 15.857 | 46767.608 | 57086.176 | -10318.567 | 2135470.610 | 49.024 | 6:00 AM | -22139.969 | 2585789.476 | 59.362 | 6:00 AM |
| | 7:00 AM | 7.900 | 10.253 | 12.218 | 15.857 | 43983.822 | 57086.176 | -13102.354 | 2122368.257 | 48.723 | 7:00 AM | -28112.983 | 2557676.493 | 58.716 | 7:00 AM |
| | 8:00 AM | 7.500 | 10.253 | 11.599 | 15.857 | 41756.793 | 57086.176 | -15329.383 | 2107038.874 | 48.371 | 8:00 AM | -32891.393 | 2524785.100 | 57.961 | 8:00 AM |
| | 9:00 AM | 8.000 | 10.253 | 12.372 | 15.857 | 44540.579 | 57086.176 | -12545.596 | 2094493.278 | 48.083 | 9:00 AM | -26918.380 | 2497866.720 | 57.343 | 9:00 AM |
| | 10:00 AM | 10.200 | 10.253 | 15.775 | 15.857 | 56789.238 | 57086.176 | -296.937 | 2094196.340 | 48.076 | 10:00 AM | -637.121 | 2497229.599 | 57.329 | 10:00 AM |
| | 11:00 AM | 11.300 | 10.253 | 17.476 | 15.857 | 62913.568 | 57086.176 | 5827.392 | 2100023.733 | 48.210 | 11:00 AM | 12503.508 | 2509733.107 | 57.616 | 11:00 AM |
| | 12:00 PM | 13.500 | 10.253 | 20.878 | 15.857 | 75162.227 | 57086.176 | 18076.052 | 2118099.784 | 48.625 | 12:00 PM | 38784.766 | 2548517.873 | 58.506 | 12:00 PM |
| | 1:00 PM | 13.500 | 10.253 | 20.878 | 15.857 | 75162.227 | 57086.176 | 18076.052 | 2136175.836 | 49.040 | 1:00 PM | 38784.766 | 2587302.639 | 59.396 | 1:00 PM |
| | 2:00 PM | 15.000 | 10.253 | 23.198 | 15.857 | 83513.586 | 57086.176 | 26427.410 | 2162603.246 | 49.647 | 2:00 PM | 56703.806 | 2644006.445 | 60.698 | 2:00 PM |
| | 3:00 PM | 15.100 | 10.253 | 23.353 | 15.857 | 84070.343 | 57086.176 | 26984.167 | 2189587.414 | 50.266 | 3:00 PM | 57898.409 | 2701904.854 | 62.027 | 3:00 PM |
| | 4:00 PM | 17.100 | 10.253 | 26.446 | 15.857 | 95205.488 | 57086.176 | 38119.312 | 2227706.726 | 51.141 | 4:00 PM | 81790.462 | 2783695.316 | 63.905 | 4:00 PM |
| | 5:00 PM | 16.900 | 10.253 | 26.137 | 15.857 | 94091.973 | 57086.176 | 37005.798 | 2264712.524 | 51.991 | 5:00 PM | 79401.257 | 2863096.573 | 65.728 | 5:00 PM |
| | 6:00 PM | 14.700 | 10.253 | 22.734 | 15.857 | 81843.314 | 57086.176 | 24757.139 | 2289469.662 | 52.559 | 6:00 PM | 53119.998 | 2916216.571 | 66.947 | 6:00 PM |
| | 7:00 PM | 14.700 | 10.253 | 22.734 | 15.857 | 81843.314 | 57086.176 | 24757.139 | 2314226.801 | 53.127 | 7:00 PM | 53119.998 | 2969336.569 | 68.167 | 7:00 PM |
| | 8:00 PM | 14.300 | 10.253 | 22.116 | 15.857 | 79616.285 | 57086.176 | 22530.110 | 2336756.910 | 53.645 | 8:00 PM | 48341.588 | 3017678.156 | 69.276 | 8:00 PM |
| | 9:00 PM | 14.300 | 10.253 | 22.116 | 15.857 | 79616.285 | 57086.176 | 22530.110 | 2359287.020 | 54.162 | 9:00 PM | 48341.588 | 3066019.744 | 70.386 | 9:00 PM |
| | 10:00 PM | 15.400 | 10.253 | 23.817 | 15.857 | 85740.615 | 57086.176 | 28654.439 | 2387941.459 | 54.820 | 10:00 PM | 61482.217 | 3127501.961 | 71.798 | 10:00 PM |
| | 11:00 PM | 13.900 | 10.253 | 21.497 | 15.857 | 77389.256 | 57086.176 | 20303.081 | 2408244.540 | 55.286 | 11:00 PM | 43563.177 | 3171065.138 | 72.798 | 11:00 PM |
| | 12:00 AM | 13.700 | 10.253 | 21.188 | 15.857 | 76275.742 | 57086.176 | 19189.566 | 2427434.106 | 55.726 | 12:00 AM | 41173.972 | 3212239.109 | 73.743 | 12:00 AM |

615.200
10.253 Set Out Flow
12.817 adf

Start Date Tuesday, August 25, 2009
End Date Wednesday, August 26, 2009

Indicates Input

Starting Water Volume = 40.000 acre feet = 1742400.000 cu ft

| Percent Above Ave = | -20% | Flow in | Flow Out | Flow In | Flow Out | Vol/Hour In | Vol/Hour Out | Volume Increase | Water Volume | Water Volume | Volume Increase w/ MGD at plant = 22.000 | | Water Volume | Water Volume | |
|---|---|---|---|---|---|---|---|---|---|---|---|---|---|---|---|
| | Time Period Ending at | mgd | mgd | cfs | cfs | cu ft | cu ft | cu ft | cu ft | acre feet | Time Period Ending at | cu ft | cu ft | acre feet | Time Period Ending at |
| | 12:00 AM | | | | | | | | 1742400.000 | 40.000 | 12:00 AM | | 1742400.000 | 40.000 | 12:00 AM |
| | 1:00 AM | 15.300 | 9.793 | 23.662 | 15.146 | 85183.857 | 54525.092 | 30658.765 | 1773058.765 | 40.704 | 1:00 AM | 68872.652 | 1811272.652 | 41.581 | 1:00 AM |
| | 2:00 AM | 15.100 | 9.793 | 23.353 | 15.146 | 84070.343 | 54525.092 | 29545.251 | 1802604.016 | 41.382 | 2:00 AM | 66371.224 | 1877643.875 | 43.105 | 2:00 AM |
| | 3:00 AM | 13.700 | 9.793 | 21.188 | 15.146 | 76275.742 | 54525.092 | 21750.649 | 1824354.665 | 41.881 | 3:00 AM | 48861.227 | 1926505.103 | 44.226 | 3:00 AM |
| | 4:00 AM | 9.900 | 9.793 | 15.311 | 15.146 | 55118.967 | 54525.092 | 593.874 | 1824948.540 | 41.895 | 4:00 AM | 1334.095 | 1927839.198 | 44.257 | 4:00 AM |
| | 5:00 AM | 8.700 | 9.793 | 13.455 | 15.146 | 48437.880 | 54525.092 | -6087.212 | 1818861.327 | 41.755 | 5:00 AM | -13674.473 | 1914164.725 | 43.943 | 5:00 AM |
| | 6:00 AM | 7.700 | 9.793 | 11.908 | 15.146 | 42870.307 | 54525.092 | -11654.785 | 1807206.543 | 41.488 | 6:00 AM | -26181.613 | 1887983.111 | 43.342 | 6:00 AM |
| | 7:00 AM | 7.000 | 9.793 | 10.826 | 15.146 | 38973.007 | 54525.092 | -15552.086 | 1791654.457 | 41.131 | 7:00 AM | -34936.611 | 1853046.500 | 42.540 | 7:00 AM |
| | 8:00 AM | 6.400 | 9.793 | 9.898 | 15.146 | 35632.463 | 54525.092 | -18892.629 | 1772761.828 | 40.697 | 8:00 AM | -42440.896 | 1810605.604 | 41.566 | 8:00 AM |
| | 9:00 AM | 8.000 | 9.793 | 12.372 | 15.146 | 44540.579 | 54525.092 | -9984.513 | 1762777.315 | 40.468 | 9:00 AM | -22429.471 | 1788176.133 | 41.051 | 9:00 AM |
| | 10:00 AM | 9.000 | 9.793 | 13.919 | 15.146 | 50108.151 | 54525.092 | -4416.941 | 1758360.374 | 40.366 | 10:00 AM | -9922.331 | 1778253.802 | 40.823 | 10:00 AM |
| | 11:00 AM | 12.500 | 9.793 | 19.332 | 15.146 | 69594.655 | 54525.092 | 15069.563 | 1773429.937 | 40.712 | 11:00 AM | 33852.659 | 1812106.461 | 41.600 | 11:00 AM |
| | 12:00 PM | 13.600 | 9.793 | 21.033 | 15.146 | 75718.984 | 54525.092 | 21193.892 | 1794623.829 | 41.199 | 12:00 PM | 47610.513 | 1859716.975 | 42.693 | 12:00 PM |
| | 1:00 PM | 14.300 | 9.793 | 22.116 | 15.146 | 79616.285 | 54525.092 | 25091.193 | 1819715.022 | 41.775 | 1:00 PM | 56365.512 | 1916082.486 | 43.987 | 1:00 PM |
| | 2:00 PM | 14.000 | 9.793 | 21.652 | 15.146 | 77946.013 | 54525.092 | 23420.921 | 1843135.943 | 42.313 | 2:00 PM | 52613.370 | 1968695.856 | 45.195 | 2:00 PM |
| | 3:00 PM | 14.000 | 9.793 | 21.652 | 15.146 | 77946.013 | 54525.092 | 23420.921 | 1866556.864 | 42.850 | 3:00 PM | 52613.370 | 2021309.225 | 46.403 | 3:00 PM |
| | 4:00 PM | 14.100 | 9.793 | 21.806 | 15.146 | 78502.771 | 54525.092 | 23977.678 | 1890534.543 | 43.401 | 4:00 PM | 53864.084 | 2075173.309 | 47.639 | 4:00 PM |
| | 5:00 PM | 15.200 | 9.793 | 23.508 | 15.146 | 84627.100 | 54525.092 | 30102.008 | 1920636.551 | 44.092 | 5:00 PM | 67621.938 | 2142795.246 | 49.192 | 5:00 PM |
| | 6:00 PM | 14.000 | 9.793 | 21.652 | 15.146 | 77946.013 | 54525.092 | 23420.921 | 1944057.472 | 44.629 | 6:00 PM | 52613.370 | 2195408.616 | 50.400 | 6:00 PM |
| | 7:00 PM | 12.500 | 9.793 | 19.332 | 15.146 | 69594.655 | 54525.092 | 15069.563 | 1959127.034 | 44.975 | 7:00 PM | 33852.659 | 2229261.275 | 51.177 | 7:00 PM |
| | 8:00 PM | 12.600 | 9.793 | 19.487 | 15.146 | 70151.412 | 54525.092 | 15626.320 | 1974753.354 | 45.334 | 8:00 PM | 35103.373 | 2264364.648 | 51.983 | 8:00 PM |
| | 9:00 PM | 13.800 | 9.793 | 21.342 | 15.146 | 76832.499 | 54525.092 | 22307.407 | 1997060.761 | 45.846 | 9:00 PM | 50111.941 | 2314476.590 | 53.133 | 9:00 PM |
| | 10:00 PM | 15.000 | 9.793 | 23.198 | 15.146 | 83513.586 | 54525.092 | 28988.494 | 2026049.254 | 46.512 | 10:00 PM | 65120.510 | 2379597.100 | 54.628 | 10:00 PM |
| | 11:00 PM | 13.800 | 9.793 | 21.342 | 15.146 | 76832.499 | 54525.092 | 22307.407 | 2048356.661 | 47.024 | 11:00 PM | 50111.941 | 2429709.041 | 55.778 | 11:00 PM |
| | 12:00 AM | 13.600 | 9.793 | 21.033 | 15.146 | 75718.984 | 54525.092 | 21193.892 | 2069550.553 | 47.510 | 12:00 AM | 47610.513 | 2477319.555 | 56.871 | 12:00 AM |
| | 1:00 AM | 15.300 | 9.793 | 23.662 | 15.146 | 85183.857 | 54525.092 | 30658.765 | 2100209.318 | 48.214 | 1:00 AM | 68872.652 | 2546192.206 | 58.453 | 1:00 AM |
| | 2:00 AM | 15.100 | 9.793 | 23.353 | 15.146 | 84070.343 | 54525.092 | 29545.251 | 2129754.569 | 48.892 | 2:00 AM | 66371.224 | 2612563.430 | 59.976 | 2:00 AM |
| | 3:00 AM | 13.700 | 9.793 | 21.188 | 15.146 | 76275.742 | 54525.092 | 21750.649 | 2151505.219 | 49.392 | 3:00 AM | 48861.227 | 2661424.657 | 61.098 | 3:00 AM |
| | 4:00 AM | 9.900 | 9.793 | 15.311 | 15.146 | 55118.967 | 54525.092 | 593.874 | 2152099.093 | 49.405 | 4:00 AM | 1334.095 | 2662758.752 | 61.129 | 4:00 AM |
| | 5:00 AM | 8.700 | 9.793 | 13.455 | 15.146 | 48437.880 | 54525.092 | -6087.212 | 2146011.881 | 49.266 | 5:00 AM | -13674.473 | 2649084.279 | 60.815 | 5:00 AM |
| | 6:00 AM | 7.700 | 9.793 | 11.908 | 15.146 | 42870.307 | 54525.092 | -11654.785 | 2134357.096 | 48.998 | 6:00 AM | -26181.613 | 2622902.666 | 60.214 | 6:00 AM |
| | 7:00 AM | 7.000 | 9.793 | 10.826 | 15.146 | 38973.007 | 54525.092 | -15552.086 | 2118805.010 | 48.641 | 7:00 AM | -34936.611 | 2587966.054 | 59.412 | 7:00 AM |
| | 8:00 AM | 6.400 | 9.793 | 9.898 | 15.146 | 35632.463 | 54525.092 | -18892.629 | 2099912.381 | 48.207 | 8:00 AM | -42440.896 | 2545525.159 | 58.437 | 8:00 AM |
| | 9:00 AM | 8.000 | 9.793 | 12.372 | 15.146 | 44540.579 | 54525.092 | -9984.513 | 2089927.868 | 47.978 | 9:00 AM | -22429.471 | 2523095.687 | 57.922 | 9:00 AM |
| | 10:00 AM | 9.000 | 9.793 | 13.919 | 15.146 | 50108.151 | 54525.092 | -4416.941 | 2085510.927 | 47.877 | 10:00 AM | -9922.331 | 2513173.356 | 57.695 | 10:00 AM |
| | 11:00 AM | 12.500 | 9.793 | 19.332 | 15.146 | 69594.655 | 54525.092 | 15069.563 | 2100580.490 | 48.223 | 11:00 AM | 33852.659 | 2547026.016 | 58.472 | 11:00 AM |
| | 12:00 PM | 13.600 | 9.793 | 21.033 | 15.146 | 75718.984 | 54525.092 | 21193.892 | 2121774.382 | 48.709 | 12:00 PM | 47610.513 | 2594636.529 | 59.565 | 12:00 PM |
| | 1:00 PM | 14.300 | 9.793 | 22.116 | 15.146 | 79616.285 | 54525.092 | 25091.193 | 2146865.575 | 49.285 | 1:00 PM | 56365.512 | 2651002.041 | 60.859 | 1:00 PM |
| | 2:00 PM | 14.000 | 9.793 | 21.652 | 15.146 | 77946.013 | 54525.092 | 23420.921 | 2170286.496 | 49.823 | 2:00 PM | 52613.370 | 2703615.410 | 62.066 | 2:00 PM |
| | 3:00 PM | 14.000 | 9.793 | 21.652 | 15.146 | 77946.013 | 54525.092 | 23420.921 | 2193707.417 | 50.361 | 3:00 PM | 52613.370 | 2756228.780 | 63.274 | 3:00 PM |
| | 4:00 PM | 14.100 | 9.793 | 21.806 | 15.146 | 78502.771 | 54525.092 | 23977.678 | 2217685.096 | 50.911 | 4:00 PM | 53864.084 | 2810092.863 | 64.511 | 4:00 PM |
| | 5:00 PM | 15.200 | 9.793 | 23.508 | 15.146 | 84627.100 | 54525.092 | 30102.008 | 2247787.104 | 51.602 | 5:00 PM | 67621.938 | 2877714.801 | 66.063 | 5:00 PM |
| | 6:00 PM | 14.000 | 9.793 | 21.652 | 15.146 | 77946.013 | 54525.092 | 23420.921 | 2271208.025 | 52.140 | 6:00 PM | 52613.370 | 2930328.170 | 67.271 | 6:00 PM |
| | 7:00 PM | 12.500 | 9.793 | 19.332 | 15.146 | 69594.655 | 54525.092 | 15069.563 | 2286277.588 | 52.486 | 7:00 PM | 33852.659 | 2964180.830 | 68.048 | 7:00 PM |
| | 8:00 PM | 12.600 | 9.793 | 19.487 | 15.146 | 70151.412 | 54525.092 | 15626.320 | 2301903.907 | 52.844 | 8:00 PM | 35103.373 | 2999284.203 | 68.854 | 8:00 PM |
| | 9:00 PM | 13.800 | 9.793 | 21.342 | 15.146 | 76832.499 | 54525.092 | 22307.407 | 2324211.314 | 53.357 | 9:00 PM | 50111.941 | 3049396.145 | 70.005 | 9:00 PM |
| | 10:00 PM | 15.000 | 9.793 | 23.198 | 15.146 | 83513.586 | 54525.092 | 28988.494 | 2353199.808 | 54.022 | 10:00 PM | 65120.510 | 3114516.654 | 71.499 | 10:00 PM |
| | 11:00 PM | 13.800 | 9.793 | 21.342 | 15.146 | 76832.499 | 54525.092 | 22307.407 | 2375507.214 | 54.534 | 11:00 PM | 50111.941 | 3164628.596 | 72.650 | 11:00 PM |
| | 12:00 AM | 13.600 | 9.793 | 21.033 | 15.146 | 75718.984 | 54525.092 | 21193.892 | 2396701.106 | 55.021 | 12:00 AM | 47610.513 | 3212239.109 | 73.743 | 12:00 AM |

587.600
9.793 Set Out Flow
12.242 adf

Start Date Sunday, September 13, 2009
End Date Monday, September 14, 2009

Indicates Input

Starting Water Volume = 40.000 acre feet = 1742400.000 cu ft

| Percent Above Ave = | -20% | Flow in | Flow Out | Flow In | Flow Out | Vol/Hour In | Vol/Hour Out | Volume Increase | Water Volume | Water Volume | Volume Increase w/ MGD at plant = 22.000 | Water Volume | Water Volume | |
|---|---|---|---|---|---|---|---|---|---|---|---|---|---|---|
| | Time Period Ending at | mgd | mgd | cfs | cfs | cu ft | cu ft | cu ft | cu ft | acre feet | Time Period Ending at | cu ft | cu ft | acre feet | Time Period Ending at |
| | 12:00 AM | | | | | | | | 1742400.000 | 40.000 | 12:00 AM | | 1742400.000 | 40.000 | 12:00 AM |
| | 1:00 AM | 15.600 | 9.943 | 24.126 | 15.378 | 86854.129 | 55360.228 | 31493.901 | 1773893.901 | 40.723 | 1:00 AM | 69681.444 | 1812081.444 | 41.600 | 1:00 AM |
| | 2:00 AM | 13.800 | 9.943 | 21.342 | 15.378 | 76832.499 | 55360.228 | 21472.271 | 1795366.172 | 41.216 | 2:00 AM | 47508.209 | 1859589.653 | 42.690 | 2:00 AM |
| | 3:00 AM | 12.300 | 9.943 | 19.023 | 15.378 | 68481.140 | 55360.228 | 13120.912 | 1808487.084 | 41.517 | 3:00 AM | 29030.513 | 1888620.166 | 43.357 | 3:00 AM |
| | 4:00 AM | 11.000 | 9.943 | 17.012 | 15.378 | 61243.296 | 55360.228 | 5883.068 | 1814370.152 | 41.652 | 4:00 AM | 13016.510 | 1901636.676 | 43.656 | 4:00 AM |
| | 5:00 AM | 9.700 | 9.943 | 15.002 | 15.378 | 54005.452 | 55360.228 | -1354.776 | 1813015.376 | 41.621 | 5:00 AM | -2997.493 | 1898639.183 | 43.587 | 5:00 AM |
| | 6:00 AM | 8.600 | 9.943 | 13.300 | 15.378 | 47881.122 | 55360.228 | -7479.106 | 1805536.271 | 41.449 | 6:00 AM | -16547.803 | 1882091.380 | 43.207 | 6:00 AM |
| | 7:00 AM | 5.700 | 9.943 | 8.815 | 15.378 | 31735.163 | 55360.228 | -23625.065 | 1781911.205 | 40.907 | 7:00 AM | -52271.348 | 1829820.032 | 42.007 | 7:00 AM |
| | 8:00 AM | 5.400 | 9.943 | 8.351 | 15.378 | 30064.891 | 55360.228 | -25295.337 | 1756615.868 | 40.326 | 8:00 AM | -55966.888 | 1773853.144 | 40.722 | 8:00 AM |
| | 9:00 AM | 7.000 | 9.943 | 10.826 | 15.378 | 38973.007 | 55360.228 | -16387.221 | 1740228.647 | 39.950 | 9:00 AM | -36257.345 | 1737595.799 | 39.890 | 9:00 AM |
| | 10:00 AM | 5.900 | 9.943 | 9.125 | 15.378 | 32848.677 | 55360.228 | -22511.551 | 1717717.096 | 39.433 | 10:00 AM | -49807.656 | 1687788.144 | 38.746 | 10:00 AM |
| | 11:00 AM | 8.900 | 9.943 | 13.764 | 15.378 | 49551.394 | 55360.228 | -5808.834 | 1711908.262 | 39.300 | 11:00 AM | -12852.264 | 1674935.880 | 38.451 | 11:00 AM |
| | 12:00 PM | 9.300 | 9.943 | 14.383 | 15.378 | 51778.423 | 55360.228 | -3581.805 | 1708326.457 | 39.218 | 12:00 PM | -7924.878 | 1667011.001 | 38.269 | 12:00 PM |
| | 1:00 PM | 13.700 | 9.943 | 21.188 | 15.378 | 76275.742 | 55360.228 | 20915.514 | 1729241.971 | 39.698 | 1:00 PM | 46276.363 | 1713287.364 | 39.332 | 1:00 PM |
| | 2:00 PM | 15.300 | 9.943 | 23.662 | 15.378 | 85183.857 | 55360.228 | 29823.629 | 1759065.600 | 40.383 | 2:00 PM | 65985.905 | 1779273.269 | 40.846 | 2:00 PM |
| | 3:00 PM | 16.100 | 9.943 | 24.899 | 15.378 | 89637.915 | 55360.228 | 34277.687 | 1793343.287 | 41.169 | 3:00 PM | 75840.676 | 1855113.944 | 42.588 | 3:00 PM |
| | 4:00 PM | 16.400 | 9.943 | 25.363 | 15.378 | 91308.187 | 55360.228 | 35947.959 | 1829291.246 | 41.995 | 4:00 PM | 79536.215 | 1934650.159 | 44.413 | 4:00 PM |
| | 5:00 PM | 18.400 | 9.943 | 28.456 | 15.378 | 102443.332 | 55360.228 | 47083.104 | 1876374.350 | 43.076 | 5:00 PM | 104173.143 | 2038823.302 | 46.805 | 5:00 PM |
| | 6:00 PM | 16.900 | 9.943 | 26.137 | 15.378 | 94091.973 | 55360.228 | 38731.745 | 1915106.095 | 43.965 | 6:00 PM | 85695.447 | 2124518.749 | 48.772 | 6:00 PM |
| | 7:00 PM | 14.700 | 9.943 | 22.734 | 15.378 | 81843.314 | 55360.228 | 26483.086 | 1941589.181 | 44.573 | 7:00 PM | 58594.826 | 2183113.576 | 50.117 | 7:00 PM |
| | 8:00 PM | 14.400 | 9.943 | 22.270 | 15.378 | 80173.042 | 55360.228 | 24812.814 | 1966401.996 | 45.142 | 8:00 PM | 54899.287 | 2238012.863 | 51.378 | 8:00 PM |
| | 9:00 PM | 14.200 | 9.943 | 21.961 | 15.378 | 79059.528 | 55360.228 | 23699.300 | 1990101.295 | 45.686 | 9:00 PM | 52435.595 | 2290448.458 | 52.581 | 9:00 PM |
| | 10:00 PM | 14.300 | 9.943 | 22.116 | 15.378 | 79616.285 | 55360.228 | 24256.057 | 2014357.352 | 46.243 | 10:00 PM | 53667.441 | 2344115.899 | 53.813 | 10:00 PM |
| | 11:00 PM | 14.300 | 9.943 | 22.116 | 15.378 | 79616.285 | 55360.228 | 24256.057 | 2038613.409 | 46.800 | 11:00 PM | 53667.441 | 2397783.340 | 55.046 | 11:00 PM |
| | 12:00 AM | 16.400 | 9.943 | 25.363 | 15.378 | 91308.187 | 55360.228 | 35947.959 | 2074561.368 | 47.625 | 12:00 AM | 79536.215 | 2477319.555 | 56.871 | 12:00 AM |
| | 1:00 AM | 15.600 | 9.943 | 24.126 | 15.378 | 86854.129 | 55360.228 | 31493.901 | 2106055.269 | 48.348 | 1:00 AM | 69681.444 | 2547000.999 | 58.471 | 1:00 AM |
| | 2:00 AM | 13.800 | 9.943 | 21.342 | 15.378 | 76832.499 | 55360.228 | 21472.271 | 2127527.540 | 48.841 | 2:00 AM | 47508.209 | 2594509.208 | 59.562 | 2:00 AM |
| | 3:00 AM | 12.300 | 9.943 | 19.023 | 15.378 | 68481.140 | 55360.228 | 13120.912 | 2140648.453 | 49.143 | 3:00 AM | 29030.513 | 2623539.721 | 60.228 | 3:00 AM |
| | 4:00 AM | 11.000 | 9.943 | 17.012 | 15.378 | 61243.296 | 55360.228 | 5883.068 | 2146531.521 | 49.278 | 4:00 AM | 13016.510 | 2636556.231 | 60.527 | 4:00 AM |
| | 5:00 AM | 9.700 | 9.943 | 15.002 | 15.378 | 54005.452 | 55360.228 | -1354.776 | 2145176.745 | 49.246 | 5:00 AM | -2997.493 | 2633558.738 | 60.458 | 5:00 AM |
| | 6:00 AM | 8.600 | 9.943 | 13.300 | 15.378 | 47881.122 | 55360.228 | -7479.106 | 2137697.639 | 49.075 | 6:00 AM | -16547.803 | 2617010.935 | 60.078 | 6:00 AM |
| | 7:00 AM | 5.700 | 9.943 | 8.815 | 15.378 | 31735.163 | 55360.228 | -23625.065 | 2114072.574 | 48.532 | 7:00 AM | -52271.348 | 2564739.587 | 58.878 | 7:00 AM |
| | 8:00 AM | 5.400 | 9.943 | 8.351 | 15.378 | 30064.891 | 55360.228 | -25295.337 | 2088777.237 | 47.952 | 8:00 AM | -55966.888 | 2508772.699 | 57.593 | 8:00 AM |
| | 9:00 AM | 7.000 | 9.943 | 10.826 | 15.378 | 38973.007 | 55360.228 | -16387.221 | 2072390.015 | 47.576 | 9:00 AM | -36257.345 | 2472515.354 | 56.761 | 9:00 AM |
| | 10:00 AM | 5.900 | 9.943 | 9.125 | 15.378 | 32848.677 | 55360.228 | -22511.551 | 2049878.464 | 47.059 | 10:00 AM | -49807.656 | 2422707.698 | 55.618 | 10:00 AM |
| | 11:00 AM | 8.900 | 9.943 | 13.764 | 15.378 | 49551.394 | 55360.228 | -5808.834 | 2044069.630 | 46.925 | 11:00 AM | -12852.264 | 2409855.434 | 55.323 | 11:00 AM |
| | 12:00 PM | 9.300 | 9.943 | 14.383 | 15.378 | 51778.423 | 55360.228 | -3581.805 | 2040487.825 | 46.843 | 12:00 PM | -7924.878 | 2401930.556 | 55.141 | 12:00 PM |
| | 1:00 PM | 13.700 | 9.943 | 21.188 | 15.378 | 76275.742 | 55360.228 | 20915.514 | 2061403.339 | 47.323 | 1:00 PM | 46276.363 | 2448206.918 | 56.203 | 1:00 PM |
| | 2:00 PM | 15.300 | 9.943 | 23.662 | 15.378 | 85183.857 | 55360.228 | 29823.629 | 2091226.968 | 48.008 | 2:00 PM | 65985.905 | 2514192.823 | 57.718 | 2:00 PM |
| | 3:00 PM | 16.100 | 9.943 | 24.899 | 15.378 | 89637.915 | 55360.228 | 34277.687 | 2125504.656 | 48.795 | 3:00 PM | 75840.676 | 2590033.499 | 59.459 | 3:00 PM |
| | 4:00 PM | 16.400 | 9.943 | 25.363 | 15.378 | 91308.187 | 55360.228 | 35947.959 | 2161452.615 | 49.620 | 4:00 PM | 79536.215 | 2669569.714 | 61.285 | 4:00 PM |
| | 5:00 PM | 18.400 | 9.943 | 28.456 | 15.378 | 102443.332 | 55360.228 | 47083.104 | 2208535.718 | 50.701 | 5:00 PM | 104173.143 | 2773742.857 | 63.676 | 5:00 PM |
| | 6:00 PM | 16.900 | 9.943 | 26.137 | 15.378 | 94091.973 | 55360.228 | 38731.745 | 2247267.464 | 51.590 | 6:00 PM | 85695.447 | 2859438.304 | 65.644 | 6:00 PM |
| | 7:00 PM | 14.700 | 9.943 | 22.734 | 15.378 | 81843.314 | 55360.228 | 26483.086 | 2273750.550 | 52.198 | 7:00 PM | 58594.826 | 2918033.130 | 66.989 | 7:00 PM |
| | 8:00 PM | 14.400 | 9.943 | 22.270 | 15.378 | 80173.042 | 55360.228 | 24812.814 | 2298563.364 | 52.768 | 8:00 PM | 54899.287 | 2972932.418 | 68.249 | 8:00 PM |
| | 9:00 PM | 14.200 | 9.943 | 21.961 | 15.378 | 79059.528 | 55360.228 | 23699.300 | 2322262.664 | 53.312 | 9:00 PM | 52435.595 | 3025368.012 | 69.453 | 9:00 PM |
| | 10:00 PM | 14.300 | 9.943 | 22.116 | 15.378 | 79616.285 | 55360.228 | 24256.057 | 2346518.721 | 53.869 | 10:00 PM | 53667.441 | 3079035.453 | 70.685 | 10:00 PM |
| | 11:00 PM | 14.300 | 9.943 | 22.116 | 15.378 | 79616.285 | 55360.228 | 24256.057 | 2370774.778 | 54.425 | 11:00 PM | 53667.441 | 3132702.894 | 71.917 | 11:00 PM |
| | 12:00 AM | 16.400 | 9.943 | 25.363 | 15.378 | 91308.187 | 55360.228 | 35947.959 | 2406722.737 | 55.251 | 12:00 AM | 79536.215 | 3212239.109 | 73.743 | 12:00 AM |

596.600
9.943 Set Out Flow
12.429 adf

Exhibit J-4

Start Date Monday, October 19, 2009
End Date Tuesday, October 20, 2009

Indicates Input

Starting Water Volume = 40.000 acre feet = 1742400.000 cu ft

| Percent Above Ave = | -20% | Flow in | Flow Out | Flow In | Flow Out | Vol/Hour In | Vol/Hour Out | Volume Increase | Water Volume | Water Volume | Volume Increase w/ MGD at plant = 22.000 | Water Volume | Water Volume | |
|---|---|---|---|---|---|---|---|---|---|---|---|---|---|---|
| | Time Period Ending at | mgd | mgd | cfs | cfs | cu ft | cu ft | cu ft | cu ft | acre feet | Time Period Ending at | cu ft | cu ft | acre feet | Time Period Ending at |
| | 12:00 AM | | | | | | | | 1742400.000 | 40.000 | 12:00 AM | | 1742400.000 | 40.000 | 12:00 AM |
| | 1:00 AM | 15.500 | 9.593 | 23.971 | 14.837 | 86297.372 | 53411.578 | 32885.794 | 1775285.794 | 40.755 | 1:00 AM | 75415.650 | 1817815.650 | 41.731 | 1:00 AM |
| | 2:00 AM | 14.700 | 9.593 | 22.734 | 14.837 | 81843.314 | 53411.578 | 28431.736 | 1803717.531 | 41.408 | 2:00 AM | 65201.341 | 1883016.991 | 43.228 | 2:00 AM |
| | 3:00 AM | 11.700 | 9.593 | 18.095 | 14.837 | 65140.597 | 53411.578 | 11729.019 | 1815446.550 | 41.677 | 3:00 AM | 26897.681 | 1909914.673 | 43.846 | 3:00 AM |
| | 4:00 AM | 9.600 | 9.593 | 14.847 | 14.837 | 53448.695 | 53411.578 | 37.117 | 1815483.667 | 41.678 | 4:00 AM | 85.119 | 1909999.792 | 43.848 | 4:00 AM |
| | 5:00 AM | 8.200 | 9.593 | 12.682 | 14.837 | 45654.094 | 53411.578 | -7757.484 | 1807726.183 | 41.500 | 5:00 AM | -17789.922 | 1892209.870 | 43.439 | 5:00 AM |
| | 6:00 AM | 7.400 | 9.593 | 11.444 | 14.837 | 41200.036 | 53411.578 | -12211.542 | 1795514.641 | 41.219 | 6:00 AM | -28004.231 | 1864205.638 | 42.796 | 6:00 AM |
| | 7:00 AM | 6.500 | 9.593 | 10.053 | 14.837 | 36189.220 | 53411.578 | -17222.357 | 1778292.283 | 40.824 | 7:00 AM | -39495.329 | 1824710.309 | 41.890 | 7:00 AM |
| | 8:00 AM | 6.400 | 9.593 | 9.898 | 14.837 | 35632.463 | 53411.578 | -17779.114 | 1760513.169 | 40.416 | 8:00 AM | -40772.118 | 1783938.191 | 40.954 | 8:00 AM |
| | 9:00 AM | 8.000 | 9.593 | 12.372 | 14.837 | 44540.579 | 53411.578 | -8870.999 | 1751642.170 | 40.212 | 9:00 AM | -20343.499 | 1763594.692 | 40.487 | 9:00 AM |
| | 10:00 AM | 8.800 | 9.593 | 13.610 | 14.837 | 48994.637 | 53411.578 | -4416.941 | 1747225.229 | 40.111 | 10:00 AM | -10129.190 | 1753465.502 | 40.254 | 10:00 AM |
| | 11:00 AM | 11.500 | 9.593 | 17.785 | 14.837 | 64027.082 | 53411.578 | 10615.505 | 1757840.734 | 40.354 | 11:00 AM | 24344.104 | 1777809.606 | 40.813 | 11:00 AM |
| | 12:00 PM | 13.700 | 9.593 | 21.188 | 14.837 | 76275.742 | 53411.578 | 22864.164 | 1780704.898 | 40.879 | 12:00 PM | 52433.454 | 1830243.060 | 42.017 | 12:00 PM |
| | 1:00 PM | 14.100 | 9.593 | 21.806 | 14.837 | 78502.771 | 53411.578 | 25091.193 | 1805796.091 | 41.455 | 1:00 PM | 57540.609 | 1887783.669 | 43.338 | 1:00 PM |
| | 2:00 PM | 14.200 | 9.593 | 21.961 | 14.837 | 79059.528 | 53411.578 | 25647.950 | 1831444.041 | 42.044 | 2:00 PM | 58817.398 | 1946601.067 | 44.688 | 2:00 PM |
| | 3:00 PM | 14.300 | 9.593 | 22.116 | 14.837 | 79616.285 | 53411.578 | 26204.707 | 1857648.748 | 42.646 | 3:00 PM | 60094.186 | 2006695.253 | 46.067 | 3:00 PM |
| | 4:00 PM | 14.700 | 9.593 | 22.734 | 14.837 | 81843.314 | 53411.578 | 28431.736 | 1886080.485 | 43.298 | 4:00 PM | 65201.341 | 2071896.594 | 47.564 | 4:00 PM |
| | 5:00 PM | 14.100 | 9.593 | 21.806 | 14.837 | 78502.771 | 53411.578 | 25091.193 | 1911171.678 | 43.874 | 5:00 PM | 57540.609 | 2129437.203 | 48.885 | 5:00 PM |
| | 6:00 PM | 13.500 | 9.593 | 20.878 | 14.837 | 75162.227 | 53411.578 | 21750.649 | 1932922.327 | 44.374 | 6:00 PM | 49879.877 | 2179317.081 | 50.030 | 6:00 PM |
| | 7:00 PM | 13.000 | 9.593 | 20.105 | 14.837 | 72378.441 | 53411.578 | 18966.863 | 1951889.190 | 44.809 | 7:00 PM | 43495.934 | 2222813.014 | 51.029 | 7:00 PM |
| | 8:00 PM | 13.000 | 9.593 | 20.105 | 14.837 | 72378.441 | 53411.578 | 18966.863 | 1970856.053 | 45.245 | 8:00 PM | 43495.934 | 2266308.948 | 52.027 | 8:00 PM |
| | 9:00 PM | 13.100 | 9.593 | 20.260 | 14.837 | 72935.198 | 53411.578 | 19523.620 | 1990379.674 | 45.693 | 9:00 PM | 44772.722 | 2311081.671 | 53.055 | 9:00 PM |
| | 10:00 PM | 13.700 | 9.593 | 21.188 | 14.837 | 76275.742 | 53411.578 | 22864.164 | 2013243.838 | 46.218 | 10:00 PM | 52433.454 | 2363515.125 | 54.259 | 10:00 PM |
| | 11:00 PM | 14.100 | 9.593 | 21.806 | 14.837 | 78502.771 | 53411.578 | 25091.193 | 2038335.031 | 46.794 | 11:00 PM | 57540.609 | 2421055.734 | 55.580 | 11:00 PM |
| | 12:00 AM | 14.000 | 9.593 | 21.652 | 14.837 | 77946.013 | 53411.578 | 24534.436 | 2062869.466 | 47.357 | 12:00 AM | 56263.820 | 2477319.555 | 56.871 | 12:00 AM |
| | 1:00 AM | 15.500 | 9.593 | 23.971 | 14.837 | 86297.372 | 53411.578 | 32885.794 | 2095755.261 | 48.112 | 1:00 AM | 75415.650 | 2552735.205 | 58.603 | 1:00 AM |
| | 2:00 AM | 14.700 | 9.593 | 22.734 | 14.837 | 81843.314 | 53411.578 | 28431.736 | 2124186.997 | 48.765 | 2:00 AM | 65201.341 | 2617936.546 | 60.100 | 2:00 AM |
| | 3:00 AM | 11.700 | 9.593 | 18.095 | 14.837 | 65140.597 | 53411.578 | 11729.019 | 2135916.016 | 49.034 | 3:00 AM | 26897.681 | 2644834.227 | 60.717 | 3:00 AM |
| | 4:00 AM | 9.600 | 9.593 | 14.847 | 14.837 | 53448.695 | 53411.578 | 37.117 | 2135953.133 | 49.035 | 4:00 AM | 85.119 | 2644919.346 | 60.719 | 4:00 AM |
| | 5:00 AM | 8.200 | 9.593 | 12.682 | 14.837 | 45654.094 | 53411.578 | -7757.484 | 2128195.649 | 48.857 | 5:00 AM | -17789.922 | 2627129.424 | 60.311 | 5:00 AM |
| | 6:00 AM | 7.400 | 9.593 | 11.444 | 14.837 | 41200.036 | 53411.578 | -12211.542 | 2115984.107 | 48.576 | 6:00 AM | -28004.231 | 2599125.193 | 59.668 | 6:00 AM |
| | 7:00 AM | 6.500 | 9.593 | 10.053 | 14.837 | 36189.220 | 53411.578 | -17222.357 | 2098761.750 | 48.181 | 7:00 AM | -39495.329 | 2559629.864 | 58.761 | 7:00 AM |
| | 8:00 AM | 6.400 | 9.593 | 9.898 | 14.837 | 35632.463 | 53411.578 | -17779.114 | 2080982.635 | 47.773 | 8:00 AM | -40772.118 | 2518857.746 | 57.825 | 8:00 AM |
| | 9:00 AM | 8.000 | 9.593 | 12.372 | 14.837 | 44540.579 | 53411.578 | -8870.999 | 2072111.637 | 47.569 | 9:00 AM | -20343.499 | 2498514.246 | 57.358 | 9:00 AM |
| | 10:00 AM | 8.800 | 9.593 | 13.610 | 14.837 | 48994.637 | 53411.578 | -4416.941 | 2067694.696 | 47.468 | 10:00 AM | -10129.190 | 2488385.056 | 57.125 | 10:00 AM |
| | 11:00 AM | 11.500 | 9.593 | 17.785 | 14.837 | 64027.082 | 53411.578 | 10615.505 | 2078310.200 | 47.711 | 11:00 AM | 24344.104 | 2512729.160 | 57.684 | 11:00 AM |
| | 12:00 PM | 13.700 | 9.593 | 21.188 | 14.837 | 76275.742 | 53411.578 | 22864.164 | 2101174.364 | 48.236 | 12:00 PM | 52433.454 | 2565162.615 | 58.888 | 12:00 PM |
| | 1:00 PM | 14.100 | 9.593 | 21.806 | 14.837 | 78502.771 | 53411.578 | 25091.193 | 2126265.557 | 48.812 | 1:00 PM | 57540.609 | 2622703.224 | 60.209 | 1:00 PM |
| | 2:00 PM | 14.200 | 9.593 | 21.961 | 14.837 | 79059.528 | 53411.578 | 25647.950 | 2151913.507 | 49.401 | 2:00 PM | 58817.398 | 2681520.621 | 61.559 | 2:00 PM |
| | 3:00 PM | 14.300 | 9.593 | 22.116 | 14.837 | 79616.285 | 53411.578 | 26204.707 | 2178118.215 | 50.003 | 3:00 PM | 60094.186 | 2741614.808 | 62.939 | 3:00 PM |
| | 4:00 PM | 14.700 | 9.593 | 22.734 | 14.837 | 81843.314 | 53411.578 | 28431.736 | 2206549.951 | 50.655 | 4:00 PM | 65201.341 | 2806816.149 | 64.436 | 4:00 PM |
| | 5:00 PM | 14.100 | 9.593 | 21.806 | 14.837 | 78502.771 | 53411.578 | 25091.193 | 2231641.144 | 51.231 | 5:00 PM | 57540.609 | 2864356.758 | 65.757 | 5:00 PM |
| | 6:00 PM | 13.500 | 9.593 | 20.878 | 14.837 | 75162.227 | 53411.578 | 21750.649 | 2253391.793 | 51.731 | 6:00 PM | 49879.877 | 2914236.635 | 66.902 | 6:00 PM |
| | 7:00 PM | 13.000 | 9.593 | 20.105 | 14.837 | 72378.441 | 53411.578 | 18966.863 | 2272358.657 | 52.166 | 7:00 PM | 43495.934 | 2957732.569 | 67.900 | 7:00 PM |
| | 8:00 PM | 13.000 | 9.593 | 20.105 | 14.837 | 72378.441 | 53411.578 | 18966.863 | 2291325.520 | 52.602 | 8:00 PM | 43495.934 | 3001228.503 | 68.899 | 8:00 PM |
| | 9:00 PM | 13.100 | 9.593 | 20.260 | 14.837 | 72935.198 | 53411.578 | 19523.620 | 2310849.140 | 53.050 | 9:00 PM | 44772.722 | 3046001.225 | 69.927 | 9:00 PM |
| | 10:00 PM | 13.700 | 9.593 | 21.188 | 14.837 | 76275.742 | 53411.578 | 22864.164 | 2333713.304 | 53.575 | 10:00 PM | 52433.454 | 3098434.680 | 71.130 | 10:00 PM |
| | 11:00 PM | 14.100 | 9.593 | 21.806 | 14.837 | 78502.771 | 53411.578 | 25091.193 | 2358804.497 | 54.151 | 11:00 PM | 57540.609 | 3155975.289 | 72.451 | 11:00 PM |
| | 12:00 AM | 14.000 | 9.593 | 21.652 | 14.837 | 77946.013 | 53411.578 | 24534.436 | 2383338.933 | 54.714 | 12:00 AM | 56263.820 | 3212239.109 | 73.743 | 12:00 AM |

575.600
9.593 Set Out Flow
11.992 adf

Exhibit K

**Pond Drop in Elevation Overnight - 9 hours of Irrigation @ Peak Flow**

**18 Hole Ponds**

| | | | | | | | |
|---|---|---|---|---|---|---|---|
| Nighttime Peak Flow Out = | 2525 | GPM | (9 hr ave. flow) | Pond Area = | 3.004 | Acres | |
| Nighttime Peak Flow Out = | 3.636 | MGD | (9 hr ave. flow) | Pond Volume= | 7.510 | Acre Feet | |
| Average Flow In = | 947 | GPM | (24 hr. ave. flow) | Highest Drop= | 10.44 | inches | at 6:00 AM |
| Average Flow In = | 1.364 | MGD | (24 hr. ave. flow) | Lowest Drop= | 0.00 | inches | at 9:00 PM |
| Average Flow In = | 2.110 | CFS | (24 hr. ave. flow) | | | | |

**9 Hole Ponds**

| | | | | | | | |
|---|---|---|---|---|---|---|---|
| Nighttime Peak Flow Out = | 1458 | GPM | (9 hr ave. flow) | Pond Area = | 3.358 | Acres | |
| Nighttime Peak Flow Out = | 2.100 | MGD | (9 hr ave. flow) | Pond Volume= | 8.395 | Acre Feet | |
| Average Flow In = | 547 | GPM | (24 hr. ave. flow) | Highest Drop= | 5.39 | inches | at 6:00 AM |
| Average Flow In = | 0.787 | MGD | (24 hr. ave. flow) | Lowest Drop= | -0.01 | inches | at 9:00 PM |
| Average Flow In = | 1.218 | CFS | (24 hr. ave. flow) | | | | |

**Plaza Park Pond**

| | | | | | | | |
|---|---|---|---|---|---|---|---|
| Nighttime Peak Flow Out = | 627 | GPM | (9 hr ave. flow) | Pond Area = | 0.986 | Acres | |
| Nighttime Peak Flow Out = | 0.903 | MGD | (9 hr ave. flow) | Pond Volume= | 2.465 | Acre Feet | |
| Average Flow In = | 235 | GPM | (24 hr. ave. flow) | Highest Drop= | 7.91 | inches | at 6:00 AM |
| Average Flow In = | 0.339 | MGD | (24 hr. ave. flow) | Lowest Drop= | 0.01 | inches | at 9:00 PM |
| Average Flow In = | 0.524 | CFS | (24 hr. ave. flow) | | | | |

**Ponds If All Tied Together**

| | | | | | | | |
|---|---|---|---|---|---|---|---|
| Nighttime Peak Flow Out = | 4655 | GPM | (9 hr ave. flow) | Pond Area = | 7.347 | Acres | |
| Nighttime Peak Flow Out = | 6.703 | MGD | (9 hr ave. flow) | Pond Volume= | 18.368 | Acre Feet | |
| Average Flow In = | 1746 | GPM | (24 hr. ave. flow) | Highest Drop= | 7.87 | inches | at 6:00 AM |
| Average Flow In = | 2.514 | MGD | (24 hr. ave. flow) | Lowest Drop= | -0.01 | inches | at 9:00 PM |
| Average Flow In = | 3.889 | CFS | (24 hr. ave. flow) | | | | |

Notes:

Assumed 2.5 feet depth in all ponds to be confirmed.

Limit drop in pond water elevation to one foot or less per conversation with golf course sprinkler designer.

Based on average supply flow into ponds over a 24 hour period and peak flow out over a 9 hour nighttime irrigation cycle.

Exhibit K-1

| | | | | | | | | | | |
|---|---|---|---|---|---|---|---|---|---|---|
| Start Date | 18 Hole Ponds | | | | Indicates Input | 947.000 | GPM | = | 1.363680 | MGD |
| End Date | | 3.004 | Acres | | | 2525.000 | GPM | = | 3.636000 | MGD |
| | Starting Water Volume = | 7.510 | acre feet | = | 327135.600 | cu ft | Assumes 2.5 feet of depth | | | |

| Percent Above Ave = | 0% | Flow In | Flow Out | Flow In | Flow Out | Vol/Hour In | Vol/Hour Out | Volume Increase | Water Volume | Water Volume | Elevation Drop From Start | |
|---|---|---|---|---|---|---|---|---|---|---|---|---|
| | Time Period Ending at | mgd | mgd | cfs | cfs | cu ft | cu ft | cu ft | cu ft | acre feet | Inches | Time Period Ending at |
| | 9:00 PM | | | | | | | | 327135.600 | 7.510 | | 9:00 PM |
| | 10:00 PM | 1.363680 | 3.636000 | 2.109 | 5.623 | 7592.387 | 20243.693 | -12651.306 | 314484.294 | 7.220 | 1.16 | 10:00 PM |
| | 11:00 PM | 1.363680 | 3.636000 | 2.109 | 5.623 | 7592.387 | 20243.693 | -12651.306 | 301832.988 | 6.929 | 2.32 | 11:00 PM |
| | 12:00 AM | 1.363680 | 3.636000 | 2.109 | 5.623 | 7592.387 | 20243.693 | -12651.306 | 289181.682 | 6.639 | 3.48 | 12:00 AM |
| | 1:00 AM | 1.363680 | 3.636000 | 2.109 | 5.623 | 7592.387 | 20243.693 | -12651.306 | 276530.375 | 6.348 | 4.64 | 1:00 AM |
| | 2:00 AM | 1.363680 | 3.636000 | 2.109 | 5.623 | 7592.387 | 20243.693 | -12651.306 | 263879.069 | 6.058 | 5.80 | 2:00 AM |
| | 3:00 AM | 1.363680 | 3.636000 | 2.109 | 5.623 | 7592.387 | 20243.693 | -12651.306 | 251227.763 | 5.767 | 6.96 | 3:00 AM |
| | 4:00 AM | 1.363680 | 3.636000 | 2.109 | 5.623 | 7592.387 | 20243.693 | -12651.306 | 238576.457 | 5.477 | 8.12 | 4:00 AM |
| | 5:00 AM | 1.363680 | 3.636000 | 2.109 | 5.623 | 7592.387 | 20243.693 | -12651.306 | 225925.151 | 5.187 | 9.28 | 5:00 AM |
| | 6:00 AM | 1.363680 | 3.636000 | 2.109 | 5.623 | 7592.387 | 20243.693 | -12651.306 | 213273.845 | 4.896 | 10.44 | 6:00 AM |
| | 7:00 AM | 1.363680 | 0.000000 | 2.109 | 0.000 | 7592.387 | 0.000 | 7592.387 | 220866.232 | 5.070 | 9.75 | 7:00 AM |
| | 8:00 AM | 1.363680 | 0.000000 | 2.109 | 0.000 | 7592.387 | 0.000 | 7592.387 | 228458.619 | 5.245 | 9.05 | 8:00 AM |
| | 9:00 AM | 1.363680 | 0.000000 | 2.109 | 0.000 | 7592.387 | 0.000 | 7592.387 | 236051.006 | 5.419 | 8.35 | 9:00 AM |
| | 10:00 AM | 1.363680 | 0.000000 | 2.109 | 0.000 | 7592.387 | 0.000 | 7592.387 | 243643.393 | 5.593 | 7.66 | 10:00 AM |
| | 11:00 AM | 1.363680 | 0.000000 | 2.109 | 0.000 | 7592.387 | 0.000 | 7592.387 | 251235.780 | 5.768 | 6.96 | 11:00 AM |
| | 12:00 PM | 1.363680 | 0.000000 | 2.109 | 0.000 | 7592.387 | 0.000 | 7592.387 | 258828.168 | 5.942 | 6.26 | 12:00 PM |
| | 1:00 PM | 1.363680 | 0.000000 | 2.109 | 0.000 | 7592.387 | 0.000 | 7592.387 | 266420.555 | 6.116 | 5.57 | 1:00 PM |
| | 2:00 PM | 1.363680 | 0.000000 | 2.109 | 0.000 | 7592.387 | 0.000 | 7592.387 | 274012.942 | 6.290 | 4.87 | 2:00 PM |
| | 3:00 PM | 1.363680 | 0.000000 | 2.109 | 0.000 | 7592.387 | 0.000 | 7592.387 | 281605.329 | 6.465 | 4.18 | 3:00 PM |
| | 4:00 PM | 1.363680 | 0.000000 | 2.109 | 0.000 | 7592.387 | 0.000 | 7592.387 | 289197.716 | 6.639 | 3.48 | 4:00 PM |
| | 5:00 PM | 1.363680 | 0.000000 | 2.109 | 0.000 | 7592.387 | 0.000 | 7592.387 | 296790.103 | 6.813 | 2.78 | 5:00 PM |
| | 6:00 PM | 1.363680 | 0.000000 | 2.109 | 0.000 | 7592.387 | 0.000 | 7592.387 | 304382.490 | 6.988 | 2.09 | 6:00 PM |
| | 7:00 PM | 1.363680 | 0.000000 | 2.109 | 0.000 | 7592.387 | 0.000 | 7592.387 | 311974.878 | 7.162 | 1.39 | 7:00 PM |
| | 8:00 PM | 1.363680 | 0.000000 | 2.109 | 0.000 | 7592.387 | 0.000 | 7592.387 | 319567.265 | 7.336 | 0.69 | 8:00 PM |
| | 9:00 PM | 1.363680 | 0.000000 | 2.109 | 0.000 | 7592.387 | 0.000 | 7592.387 | 327159.652 | 7.511 | 0.00 | 9:00 PM |
| | 10:00 PM | 1.363680 | 3.636000 | 2.109 | 5.623 | 7592.387 | 20243.693 | -12651.306 | 314508.346 | 7.220 | 1.16 | 10:00 PM |
| | 11:00 PM | 1.363680 | 3.636000 | 2.109 | 5.623 | 7592.387 | 20243.693 | -12651.306 | 301857.040 | 6.930 | 2.32 | 11:00 PM |
| | 12:00 AM | 1.363680 | 3.636000 | 2.109 | 5.623 | 7592.387 | 20243.693 | -12651.306 | 289205.733 | 6.639 | 3.48 | 12:00 AM |
| | 1:00 AM | 1.363680 | 3.636000 | 2.109 | 5.623 | 7592.387 | 20243.693 | -12651.306 | 276554.427 | 6.349 | 4.64 | 1:00 AM |
| | 2:00 AM | 1.363680 | 3.636000 | 2.109 | 5.623 | 7592.387 | 20243.693 | -12651.306 | 263903.121 | 6.058 | 5.80 | 2:00 AM |
| | 3:00 AM | 1.363680 | 3.636000 | 2.109 | 5.623 | 7592.387 | 20243.693 | -12651.306 | 251251.815 | 5.768 | 6.96 | 3:00 AM |
| | 4:00 AM | 1.363680 | 3.636000 | 2.109 | 5.623 | 7592.387 | 20243.693 | -12651.306 | 238600.509 | 5.478 | 8.12 | 4:00 AM |
| | 5:00 AM | 1.363680 | 3.636000 | 2.109 | 5.623 | 7592.387 | 20243.693 | -12651.306 | 225949.203 | 5.187 | 9.28 | 5:00 AM |
| | 6:00 AM | 1.363680 | 3.636000 | 2.109 | 5.623 | 7592.387 | 20243.693 | -12651.306 | 213297.896 | 4.897 | 10.44 | 6:00 AM |
| | 7:00 AM | 1.363680 | 0.000000 | 2.109 | 0.000 | 7592.387 | 0.000 | 7592.387 | 220890.284 | 5.071 | 9.74 | 7:00 AM |
| | 8:00 AM | 1.363680 | 0.000000 | 2.109 | 0.000 | 7592.387 | 0.000 | 7592.387 | 228482.671 | 5.245 | 9.05 | 8:00 AM |
| | 9:00 AM | 1.363680 | 0.000000 | 2.109 | 0.000 | 7592.387 | 0.000 | 7592.387 | 236075.058 | 5.420 | 8.35 | 9:00 AM |
| | 10:00 AM | 1.363680 | 0.000000 | 2.109 | 0.000 | 7592.387 | 0.000 | 7592.387 | 243667.445 | 5.594 | 7.65 | 10:00 AM |
| | 11:00 AM | 1.363680 | 0.000000 | 2.109 | 0.000 | 7592.387 | 0.000 | 7592.387 | 251259.832 | 5.768 | 6.96 | 11:00 AM |
| | 12:00 PM | 1.363680 | 0.000000 | 2.109 | 0.000 | 7592.387 | 0.000 | 7592.387 | 258852.219 | 5.942 | 6.26 | 12:00 PM |
| | 1:00 PM | 1.363680 | 0.000000 | 2.109 | 0.000 | 7592.387 | 0.000 | 7592.387 | 266444.607 | 6.117 | 5.57 | 1:00 PM |
| | 2:00 PM | 1.363680 | 0.000000 | 2.109 | 0.000 | 7592.387 | 0.000 | 7592.387 | 274036.994 | 6.291 | 4.87 | 2:00 PM |
| | 3:00 PM | 1.363680 | 0.000000 | 2.109 | 0.000 | 7592.387 | 0.000 | 7592.387 | 281629.381 | 6.465 | 4.17 | 3:00 PM |
| | 4:00 PM | 1.363680 | 0.000000 | 2.109 | 0.000 | 7592.387 | 0.000 | 7592.387 | 289221.768 | 6.640 | 3.48 | 4:00 PM |
| | 5:00 PM | 1.363680 | 0.000000 | 2.109 | 0.000 | 7592.387 | 0.000 | 7592.387 | 296814.155 | 6.814 | 2.78 | 5:00 PM |
| | 6:00 PM | 1.363680 | 0.000000 | 2.109 | 0.000 | 7592.387 | 0.000 | 7592.387 | 304406.542 | 6.988 | 2.08 | 6:00 PM |
| | 7:00 PM | 1.363680 | 0.000000 | 2.109 | 0.000 | 7592.387 | 0.000 | 7592.387 | 311998.930 | 7.163 | 1.39 | 7:00 PM |
| | 8:00 PM | 1.363680 | 0.000000 | 2.109 | 0.000 | 7592.387 | 0.000 | 7592.387 | 319591.317 | 7.337 | 0.69 | 8:00 PM |
| | 9:00 PM | 1.363680 | 0.000000 | 2.109 | 0.000 | 7592.387 | 0.000 | 7592.387 | 327183.704 | 7.511 | 0.00 | 9:00 PM |

65.448000
1.363500 Set Out Flow
1.363500 adf
947 GPM

Exhibit K-2

| | | | | | | | | |
|---|---|---|---|---|---|---|---|---|
| Start Date | 9 Hole Ponds | | | Indicates Input | 547.000 GPM | = | 0.787680 | |
| End Date | | 3.358 Acres | | | 1458.000 GPM | = | 2.099520 | MGD |
| | Starting Water Volume = | 8.395 | acre feet | = 365686.200 cu ft | Assumes 2.5 feet of depth | | | |

| Percent Above Ave = | 0% | Flow In | Flow Out | Flow In | Flow Out | Vol/Hour In | Vol/Hour Out | Volume Increase | Water Volume | Water Volume | Elevation Drop From Start | |
|---|---|---|---|---|---|---|---|---|---|---|---|---|
| | Time Period Ending at | mgd | mgd | cfs | cfs | cu ft | cu ft | cu ft | cu ft | acre feet | Inches | Time Period Ending at |
| | 9:00 PM | | | | | | | | 365686.200 | 8.395 | | 9:00 PM |
| | 10:00 PM | 0.787680 | 2.099520 | 1.218 | 3.247 | 4385.465 | 11689.230 | -7303.764 | 358382.436 | 8.227 | 0.60 | 10:00 PM |
| | 11:00 PM | 0.787680 | 2.099520 | 1.218 | 3.247 | 4385.465 | 11689.230 | -7303.764 | 351078.672 | 8.060 | 1.20 | 11:00 PM |
| | 12:00 AM | 0.787680 | 2.099520 | 1.218 | 3.247 | 4385.465 | 11689.230 | -7303.764 | 343774.907 | 7.892 | 1.80 | 12:00 AM |
| | 1:00 AM | 0.787680 | 2.099520 | 1.218 | 3.247 | 4385.465 | 11689.230 | -7303.764 | 336471.143 | 7.724 | 2.40 | 1:00 AM |
| | 2:00 AM | 0.787680 | 2.099520 | 1.218 | 3.247 | 4385.465 | 11689.230 | -7303.764 | 329167.379 | 7.557 | 3.00 | 2:00 AM |
| | 3:00 AM | 0.787680 | 2.099520 | 1.218 | 3.247 | 4385.465 | 11689.230 | -7303.764 | 321863.615 | 7.389 | 3.60 | 3:00 AM |
| | 4:00 AM | 0.787680 | 2.099520 | 1.218 | 3.247 | 4385.465 | 11689.230 | -7303.764 | 314559.851 | 7.221 | 4.19 | 4:00 AM |
| | 5:00 AM | 0.787680 | 2.099520 | 1.218 | 3.247 | 4385.465 | 11689.230 | -7303.764 | 307256.086 | 7.054 | 4.79 | 5:00 AM |
| | 6:00 AM | 0.787680 | 2.099520 | 1.218 | 3.247 | 4385.465 | 11689.230 | -7303.764 | 299952.322 | 6.886 | 5.39 | 6:00 AM |
| | 7:00 AM | 0.787680 | 0.000000 | 1.218 | 0.000 | 4385.465 | 0.000 | 4385.465 | 304337.788 | 6.987 | 5.03 | 7:00 AM |
| | 8:00 AM | 0.787680 | 0.000000 | 1.218 | 0.000 | 4385.465 | 0.000 | 4385.465 | 308723.253 | 7.087 | 4.67 | 8:00 AM |
| | 9:00 AM | 0.787680 | 0.000000 | 1.218 | 0.000 | 4385.465 | 0.000 | 4385.465 | 313108.719 | 7.188 | 4.31 | 9:00 AM |
| | 10:00 AM | 0.787680 | 0.000000 | 1.218 | 0.000 | 4385.465 | 0.000 | 4385.465 | 317494.184 | 7.289 | 3.95 | 10:00 AM |
| | 11:00 AM | 0.787680 | 0.000000 | 1.218 | 0.000 | 4385.465 | 0.000 | 4385.465 | 321879.649 | 7.389 | 3.59 | 11:00 AM |
| | 12:00 PM | 0.787680 | 0.000000 | 1.218 | 0.000 | 4385.465 | 0.000 | 4385.465 | 326265.115 | 7.490 | 3.23 | 12:00 PM |
| | 1:00 PM | 0.787680 | 0.000000 | 1.218 | 0.000 | 4385.465 | 0.000 | 4385.465 | 330650.580 | 7.591 | 2.87 | 1:00 PM |
| | 2:00 PM | 0.787680 | 0.000000 | 1.218 | 0.000 | 4385.465 | 0.000 | 4385.465 | 335036.046 | 7.691 | 2.51 | 2:00 PM |
| | 3:00 PM | 0.787680 | 0.000000 | 1.218 | 0.000 | 4385.465 | 0.000 | 4385.465 | 339421.511 | 7.792 | 2.15 | 3:00 PM |
| | 4:00 PM | 0.787680 | 0.000000 | 1.218 | 0.000 | 4385.465 | 0.000 | 4385.465 | 343806.977 | 7.893 | 1.79 | 4:00 PM |
| | 5:00 PM | 0.787680 | 0.000000 | 1.218 | 0.000 | 4385.465 | 0.000 | 4385.465 | 348192.442 | 7.993 | 1.44 | 5:00 PM |
| | 6:00 PM | 0.787680 | 0.000000 | 1.218 | 0.000 | 4385.465 | 0.000 | 4385.465 | 352577.907 | 8.094 | 1.08 | 6:00 PM |
| | 7:00 PM | 0.787680 | 0.000000 | 1.218 | 0.000 | 4385.465 | 0.000 | 4385.465 | 356963.373 | 8.195 | 0.72 | 7:00 PM |
| | 8:00 PM | 0.787680 | 0.000000 | 1.218 | 0.000 | 4385.465 | 0.000 | 4385.465 | 361348.838 | 8.295 | 0.36 | 8:00 PM |
| | 9:00 PM | 0.787680 | 0.000000 | 1.218 | 0.000 | 4385.465 | 0.000 | 4385.465 | 365734.304 | 8.396 | 0.00 | 9:00 PM |
| | 10:00 PM | 0.787680 | 2.099520 | 1.218 | 3.247 | 4385.465 | 11689.230 | -7303.764 | 358430.540 | 8.228 | 0.60 | 10:00 PM |
| | 11:00 PM | 0.787680 | 2.099520 | 1.218 | 3.247 | 4385.465 | 11689.230 | -7303.764 | 351126.775 | 8.061 | 1.19 | 11:00 PM |
| | 12:00 AM | 0.787680 | 2.099520 | 1.218 | 3.247 | 4385.465 | 11689.230 | -7303.764 | 343823.011 | 7.893 | 1.79 | 12:00 AM |
| | 1:00 AM | 0.787680 | 2.099520 | 1.218 | 3.247 | 4385.465 | 11689.230 | -7303.764 | 336519.247 | 7.725 | 2.39 | 1:00 AM |
| | 2:00 AM | 0.787680 | 2.099520 | 1.218 | 3.247 | 4385.465 | 11689.230 | -7303.764 | 329215.483 | 7.558 | 2.99 | 2:00 AM |
| | 3:00 AM | 0.787680 | 2.099520 | 1.218 | 3.247 | 4385.465 | 11689.230 | -7303.764 | 321911.719 | 7.390 | 3.59 | 3:00 AM |
| | 4:00 AM | 0.787680 | 2.099520 | 1.218 | 3.247 | 4385.465 | 11689.230 | -7303.764 | 314607.954 | 7.222 | 4.19 | 4:00 AM |
| | 5:00 AM | 0.787680 | 2.099520 | 1.218 | 3.247 | 4385.465 | 11689.230 | -7303.764 | 307304.190 | 7.055 | 4.79 | 5:00 AM |
| | 6:00 AM | 0.787680 | 2.099520 | 1.218 | 3.247 | 4385.465 | 11689.230 | -7303.764 | 300000.426 | 6.887 | 5.39 | 6:00 AM |
| | 7:00 AM | 0.787680 | 0.000000 | 1.218 | 0.000 | 4385.465 | 0.000 | 4385.465 | 304385.891 | 6.988 | 5.03 | 7:00 AM |
| | 8:00 AM | 0.787680 | 0.000000 | 1.218 | 0.000 | 4385.465 | 0.000 | 4385.465 | 308771.357 | 7.088 | 4.67 | 8:00 AM |
| | 9:00 AM | 0.787680 | 0.000000 | 1.218 | 0.000 | 4385.465 | 0.000 | 4385.465 | 313156.822 | 7.189 | 4.31 | 9:00 AM |
| | 10:00 AM | 0.787680 | 0.000000 | 1.218 | 0.000 | 4385.465 | 0.000 | 4385.465 | 317542.288 | 7.290 | 3.95 | 10:00 AM |
| | 11:00 AM | 0.787680 | 0.000000 | 1.218 | 0.000 | 4385.465 | 0.000 | 4385.465 | 321927.753 | 7.390 | 3.59 | 11:00 AM |
| | 12:00 PM | 0.787680 | 0.000000 | 1.218 | 0.000 | 4385.465 | 0.000 | 4385.465 | 326313.219 | 7.491 | 3.23 | 12:00 PM |
| | 1:00 PM | 0.787680 | 0.000000 | 1.218 | 0.000 | 4385.465 | 0.000 | 4385.465 | 330698.684 | 7.592 | 2.87 | 1:00 PM |
| | 2:00 PM | 0.787680 | 0.000000 | 1.218 | 0.000 | 4385.465 | 0.000 | 4385.465 | 335084.150 | 7.692 | 2.51 | 2:00 PM |
| | 3:00 PM | 0.787680 | 0.000000 | 1.218 | 0.000 | 4385.465 | 0.000 | 4385.465 | 339469.615 | 7.793 | 2.15 | 3:00 PM |
| | 4:00 PM | 0.787680 | 0.000000 | 1.218 | 0.000 | 4385.465 | 0.000 | 4385.465 | 343855.080 | 7.894 | 1.79 | 4:00 PM |
| | 5:00 PM | 0.787680 | 0.000000 | 1.218 | 0.000 | 4385.465 | 0.000 | 4385.465 | 348240.546 | 7.995 | 1.43 | 5:00 PM |
| | 6:00 PM | 0.787680 | 0.000000 | 1.218 | 0.000 | 4385.465 | 0.000 | 4385.465 | 352626.011 | 8.095 | 1.07 | 6:00 PM |
| | 7:00 PM | 0.787680 | 0.000000 | 1.218 | 0.000 | 4385.465 | 0.000 | 4385.465 | 357011.477 | 8.196 | 0.71 | 7:00 PM |
| | 8:00 PM | 0.787680 | 0.000000 | 1.218 | 0.000 | 4385.465 | 0.000 | 4385.465 | 361396.942 | 8.297 | 0.35 | 8:00 PM |
| | 9:00 PM | 0.787680 | 0.000000 | 1.218 | 0.000 | 4385.465 | 0.000 | 4385.465 | 365782.408 | 8.397 | -0.01 | 9:00 PM |

37.791360
0.787320 Set Out Flow
0.787320 adf
547 GPM

Start Date — Plaza Park Pond — Indicates Input — 235.000 GPM = 0.338400
End Date — 0.986 Acres — 627.000 GPM = 0.902880 MGD
Starting Water Volume = 2.465 acre feet = 107375.400 cu ft — Assumes 2.5 feet of depth

| Percent Above Ave = | 0% | Flow In | Flow Out | Flow In | Flow Out | Vol/Hour In | Vol/Hour Out | Volume Increase | Water Volume | Water Volume | Elevation Drop From Start | |
|---|---|---|---|---|---|---|---|---|---|---|---|---|
| | Time Period Ending at | mgd | mgd | cfs | cfs | cu ft | cu ft | cu ft | cu ft | acre feet | Inches | Time Period Ending at |
| | 9:00 PM | | | | | | | | 107375.400 | 2.465 | | 9:00 PM |
| | 10:00 PM | 0.338400 | 0.902880 | 0.523 | 1.396 | 1884.067 | 5026.850 | -3142.783 | 104232.617 | 2.393 | 0.88 | 10:00 PM |
| | 11:00 PM | 0.338400 | 0.902880 | 0.523 | 1.396 | 1884.067 | 5026.850 | -3142.783 | 101089.833 | 2.321 | 1.76 | 11:00 PM |
| | 12:00 AM | 0.338400 | 0.902880 | 0.523 | 1.396 | 1884.067 | 5026.850 | -3142.783 | 97947.050 | 2.249 | 2.63 | 12:00 AM |
| | 1:00 AM | 0.338400 | 0.902880 | 0.523 | 1.396 | 1884.067 | 5026.850 | -3142.783 | 94804.267 | 2.176 | 3.51 | 1:00 AM |
| | 2:00 AM | 0.338400 | 0.902880 | 0.523 | 1.396 | 1884.067 | 5026.850 | -3142.783 | 91661.484 | 2.104 | 4.39 | 2:00 AM |
| | 3:00 AM | 0.338400 | 0.902880 | 0.523 | 1.396 | 1884.067 | 5026.850 | -3142.783 | 88518.700 | 2.032 | 5.27 | 3:00 AM |
| | 4:00 AM | 0.338400 | 0.902880 | 0.523 | 1.396 | 1884.067 | 5026.850 | -3142.783 | 85375.917 | 1.960 | 6.15 | 4:00 AM |
| | 5:00 AM | 0.338400 | 0.902880 | 0.523 | 1.396 | 1884.067 | 5026.850 | -3142.783 | 82233.134 | 1.888 | 7.02 | 5:00 AM |
| | 6:00 AM | 0.338400 | 0.902880 | 0.523 | 1.396 | 1884.067 | 5026.850 | -3142.783 | 79090.350 | 1.816 | 7.90 | 6:00 AM |
| | 7:00 AM | 0.338400 | 0.000000 | 0.523 | 0.000 | 1884.067 | 0.000 | 1884.067 | 80974.417 | 1.859 | 7.38 | 7:00 AM |
| | 8:00 AM | 0.338400 | 0.000000 | 0.523 | 0.000 | 1884.067 | 0.000 | 1884.067 | 82858.484 | 1.902 | 6.85 | 8:00 AM |
| | 9:00 AM | 0.338400 | 0.000000 | 0.523 | 0.000 | 1884.067 | 0.000 | 1884.067 | 84742.550 | 1.945 | 6.32 | 9:00 AM |
| | 10:00 AM | 0.338400 | 0.000000 | 0.523 | 0.000 | 1884.067 | 0.000 | 1884.067 | 86626.617 | 1.989 | 5.80 | 10:00 AM |
| | 11:00 AM | 0.338400 | 0.000000 | 0.523 | 0.000 | 1884.067 | 0.000 | 1884.067 | 88510.683 | 2.032 | 5.27 | 11:00 AM |
| | 12:00 PM | 0.338400 | 0.000000 | 0.523 | 0.000 | 1884.067 | 0.000 | 1884.067 | 90394.750 | 2.075 | 4.74 | 12:00 PM |
| | 1:00 PM | 0.338400 | 0.000000 | 0.523 | 0.000 | 1884.067 | 0.000 | 1884.067 | 92278.816 | 2.118 | 4.22 | 1:00 PM |
| | 2:00 PM | 0.338400 | 0.000000 | 0.523 | 0.000 | 1884.067 | 0.000 | 1884.067 | 94162.883 | 2.162 | 3.69 | 2:00 PM |
| | 3:00 PM | 0.338400 | 0.000000 | 0.523 | 0.000 | 1884.067 | 0.000 | 1884.067 | 96046.949 | 2.205 | 3.17 | 3:00 PM |
| | 4:00 PM | 0.338400 | 0.000000 | 0.523 | 0.000 | 1884.067 | 0.000 | 1884.067 | 97931.016 | 2.248 | 2.64 | 4:00 PM |
| | 5:00 PM | 0.338400 | 0.000000 | 0.523 | 0.000 | 1884.067 | 0.000 | 1884.067 | 99815.082 | 2.291 | 2.11 | 5:00 PM |
| | 6:00 PM | 0.338400 | 0.000000 | 0.523 | 0.000 | 1884.067 | 0.000 | 1884.067 | 101699.149 | 2.335 | 1.59 | 6:00 PM |
| | 7:00 PM | 0.338400 | 0.000000 | 0.523 | 0.000 | 1884.067 | 0.000 | 1884.067 | 103583.215 | 2.378 | 1.06 | 7:00 PM |
| | 8:00 PM | 0.338400 | 0.000000 | 0.523 | 0.000 | 1884.067 | 0.000 | 1884.067 | 105467.282 | 2.421 | 0.53 | 8:00 PM |
| | 9:00 PM | 0.338400 | 0.000000 | 0.523 | 0.000 | 1884.067 | 0.000 | 1884.067 | 107351.348 | 2.464 | 0.01 | 9:00 PM |
| | 10:00 PM | 0.338400 | 0.902880 | 0.523 | 1.396 | 1884.067 | 5026.850 | -3142.783 | 104208.565 | 2.392 | 0.88 | 10:00 PM |
| | 11:00 PM | 0.338400 | 0.902880 | 0.523 | 1.396 | 1884.067 | 5026.850 | -3142.783 | 101065.782 | 2.320 | 1.76 | 11:00 PM |
| | 12:00 AM | 0.338400 | 0.902880 | 0.523 | 1.396 | 1884.067 | 5026.850 | -3142.783 | 97922.998 | 2.248 | 2.64 | 12:00 AM |
| | 1:00 AM | 0.338400 | 0.902880 | 0.523 | 1.396 | 1884.067 | 5026.850 | -3142.783 | 94780.215 | 2.176 | 3.52 | 1:00 AM |
| | 2:00 AM | 0.338400 | 0.902880 | 0.523 | 1.396 | 1884.067 | 5026.850 | -3142.783 | 91637.432 | 2.104 | 4.40 | 2:00 AM |
| | 3:00 AM | 0.338400 | 0.902880 | 0.523 | 1.396 | 1884.067 | 5026.850 | -3142.783 | 88494.648 | 2.032 | 5.28 | 3:00 AM |
| | 4:00 AM | 0.338400 | 0.902880 | 0.523 | 1.396 | 1884.067 | 5026.850 | -3142.783 | 85351.865 | 1.959 | 6.15 | 4:00 AM |
| | 5:00 AM | 0.338400 | 0.902880 | 0.523 | 1.396 | 1884.067 | 5026.850 | -3142.783 | 82209.082 | 1.887 | 7.03 | 5:00 AM |
| | 6:00 AM | 0.338400 | 0.902880 | 0.523 | 1.396 | 1884.067 | 5026.850 | -3142.783 | 79066.299 | 1.815 | 7.91 | 6:00 AM |
| | 7:00 AM | 0.338400 | 0.000000 | 0.523 | 0.000 | 1884.067 | 0.000 | 1884.067 | 80950.365 | 1.858 | 7.38 | 7:00 AM |
| | 8:00 AM | 0.338400 | 0.000000 | 0.523 | 0.000 | 1884.067 | 0.000 | 1884.067 | 82834.432 | 1.902 | 6.86 | 8:00 AM |
| | 9:00 AM | 0.338400 | 0.000000 | 0.523 | 0.000 | 1884.067 | 0.000 | 1884.067 | 84718.498 | 1.945 | 6.33 | 9:00 AM |
| | 10:00 AM | 0.338400 | 0.000000 | 0.523 | 0.000 | 1884.067 | 0.000 | 1884.067 | 86602.565 | 1.988 | 5.80 | 10:00 AM |
| | 11:00 AM | 0.338400 | 0.000000 | 0.523 | 0.000 | 1884.067 | 0.000 | 1884.067 | 88486.631 | 2.031 | 5.28 | 11:00 AM |
| | 12:00 PM | 0.338400 | 0.000000 | 0.523 | 0.000 | 1884.067 | 0.000 | 1884.067 | 90370.698 | 2.075 | 4.75 | 12:00 PM |
| | 1:00 PM | 0.338400 | 0.000000 | 0.523 | 0.000 | 1884.067 | 0.000 | 1884.067 | 92254.764 | 2.118 | 4.22 | 1:00 PM |
| | 2:00 PM | 0.338400 | 0.000000 | 0.523 | 0.000 | 1884.067 | 0.000 | 1884.067 | 94138.831 | 2.161 | 3.70 | 2:00 PM |
| | 3:00 PM | 0.338400 | 0.000000 | 0.523 | 0.000 | 1884.067 | 0.000 | 1884.067 | 96022.897 | 2.204 | 3.17 | 3:00 PM |
| | 4:00 PM | 0.338400 | 0.000000 | 0.523 | 0.000 | 1884.067 | 0.000 | 1884.067 | 97906.964 | 2.248 | 2.65 | 4:00 PM |
| | 5:00 PM | 0.338400 | 0.000000 | 0.523 | 0.000 | 1884.067 | 0.000 | 1884.067 | 99791.030 | 2.291 | 2.12 | 5:00 PM |
| | 6:00 PM | 0.338400 | 0.000000 | 0.523 | 0.000 | 1884.067 | 0.000 | 1884.067 | 101675.097 | 2.334 | 1.59 | 6:00 PM |
| | 7:00 PM | 0.338400 | 0.000000 | 0.523 | 0.000 | 1884.067 | 0.000 | 1884.067 | 103559.163 | 2.377 | 1.07 | 7:00 PM |
| | 8:00 PM | 0.338400 | 0.000000 | 0.523 | 0.000 | 1884.067 | 0.000 | 1884.067 | 105443.230 | 2.421 | 0.54 | 8:00 PM |
| | 9:00 PM | 0.338400 | 0.000000 | 0.523 | 0.000 | 1884.067 | 0.000 | 1884.067 | 107327.296 | 2.464 | 0.01 | 9:00 PM |

16.251840
0.338580 Set Out Flow
0.338580 adf
235 GPM

Exhibit K-4

Start Date — Ponds in All Tied Together — Indicates Input — 1746.000 GPM = 2.514240 MGD
End Date — 7.347 Acres — 4655.000 GPM = 6.703200 MGD
Starting Water Volume = 18.368 acre feet = 800088.300 cu ft — Assumes 2.5 feet of depth

Percent Above Ave = 0%

| Time Period Ending at | Flow In mgd | Flow Out mgd | Flow In cfs | Flow Out cfs | Vol/Hour In cu ft | Vol/Hour Out cu ft | Volume Increase cu ft | Water Volume cu ft | Water Volume acre feet | Elevation Drop From Start Inches | Time Period Ending at |
|---|---|---|---|---|---|---|---|---|---|---|---|
| 9:00 PM | | | | | | | | 800088.300 | 18.368 | | 9:00 PM |
| 10:00 PM | 2.514240 | 6.703200 | 3.888 | 10.367 | 13998.213 | 37320.551 | -23322.338 | 776765.962 | 17.832 | 0.87 | 10:00 PM |
| 11:00 PM | 2.514240 | 6.703200 | 3.888 | 10.367 | 13998.213 | 37320.551 | -23322.338 | 753443.624 | 17.297 | 1.75 | 11:00 PM |
| 12:00 AM | 2.514240 | 6.703200 | 3.888 | 10.367 | 13998.213 | 37320.551 | -23322.338 | 730121.286 | 16.761 | 2.62 | 12:00 AM |
| 1:00 AM | 2.514240 | 6.703200 | 3.888 | 10.367 | 13998.213 | 37320.551 | -23322.338 | 706798.947 | 16.226 | 3.50 | 1:00 AM |
| 2:00 AM | 2.514240 | 6.703200 | 3.888 | 10.367 | 13998.213 | 37320.551 | -23322.338 | 683476.609 | 15.690 | 4.37 | 2:00 AM |
| 3:00 AM | 2.514240 | 6.703200 | 3.888 | 10.367 | 13998.213 | 37320.551 | -23322.338 | 660154.271 | 15.155 | 5.25 | 3:00 AM |
| 4:00 AM | 2.514240 | 6.703200 | 3.888 | 10.367 | 13998.213 | 37320.551 | -23322.338 | 636831.933 | 14.620 | 6.12 | 4:00 AM |
| 5:00 AM | 2.514240 | 6.703200 | 3.888 | 10.367 | 13998.213 | 37320.551 | -23322.338 | 613509.595 | 14.084 | 7.00 | 5:00 AM |
| 6:00 AM | 2.514240 | 6.703200 | 3.888 | 10.367 | 13998.213 | 37320.551 | -23322.338 | 590187.257 | 13.549 | 7.87 | 6:00 AM |
| 7:00 AM | 2.514240 | 0.000000 | 3.888 | 0.000 | 13998.213 | 0.000 | 13998.213 | 604185.470 | 13.870 | 7.35 | 7:00 AM |
| 8:00 AM | 2.514240 | 0.000000 | 3.888 | 0.000 | 13998.213 | 0.000 | 13998.213 | 618183.683 | 14.192 | 6.82 | 8:00 AM |
| 9:00 AM | 2.514240 | 0.000000 | 3.888 | 0.000 | 13998.213 | 0.000 | 13998.213 | 632181.896 | 14.513 | 6.30 | 9:00 AM |
| 10:00 AM | 2.514240 | 0.000000 | 3.888 | 0.000 | 13998.213 | 0.000 | 13998.213 | 646180.110 | 14.834 | 5.77 | 10:00 AM |
| 11:00 AM | 2.514240 | 0.000000 | 3.888 | 0.000 | 13998.213 | 0.000 | 13998.213 | 660178.323 | 15.156 | 5.25 | 11:00 AM |
| 12:00 PM | 2.514240 | 0.000000 | 3.888 | 0.000 | 13998.213 | 0.000 | 13998.213 | 674176.536 | 15.477 | 4.72 | 12:00 PM |
| 1:00 PM | 2.514240 | 0.000000 | 3.888 | 0.000 | 13998.213 | 0.000 | 13998.213 | 688174.750 | 15.798 | 4.20 | 1:00 PM |
| 2:00 PM | 2.514240 | 0.000000 | 3.888 | 0.000 | 13998.213 | 0.000 | 13998.213 | 702172.963 | 16.120 | 3.67 | 2:00 PM |
| 3:00 PM | 2.514240 | 0.000000 | 3.888 | 0.000 | 13998.213 | 0.000 | 13998.213 | 716171.176 | 16.441 | 3.15 | 3:00 PM |
| 4:00 PM | 2.514240 | 0.000000 | 3.888 | 0.000 | 13998.213 | 0.000 | 13998.213 | 730169.389 | 16.762 | 2.62 | 4:00 PM |
| 5:00 PM | 2.514240 | 0.000000 | 3.888 | 0.000 | 13998.213 | 0.000 | 13998.213 | 744167.603 | 17.084 | 2.10 | 5:00 PM |
| 6:00 PM | 2.514240 | 0.000000 | 3.888 | 0.000 | 13998.213 | 0.000 | 13998.213 | 758165.816 | 17.405 | 1.57 | 6:00 PM |
| 7:00 PM | 2.514240 | 0.000000 | 3.888 | 0.000 | 13998.213 | 0.000 | 13998.213 | 772164.029 | 17.726 | 1.05 | 7:00 PM |
| 8:00 PM | 2.514240 | 0.000000 | 3.888 | 0.000 | 13998.213 | 0.000 | 13998.213 | 786162.242 | 18.048 | 0.52 | 8:00 PM |
| 9:00 PM | 2.514240 | 0.000000 | 3.888 | 0.000 | 13998.213 | 0.000 | 13998.213 | 800160.456 | 18.369 | 0.00 | 9:00 PM |
| 10:00 PM | 2.514240 | 6.703200 | 3.888 | 10.367 | 13998.213 | 37320.551 | -23322.338 | 776838.118 | 17.834 | 0.87 | 10:00 PM |
| 11:00 PM | 2.514240 | 6.703200 | 3.888 | 10.367 | 13998.213 | 37320.551 | -23322.338 | 753515.779 | 17.298 | 1.75 | 11:00 PM |
| 12:00 AM | 2.514240 | 6.703200 | 3.888 | 10.367 | 13998.213 | 37320.551 | -23322.338 | 730193.441 | 16.763 | 2.62 | 12:00 AM |
| 1:00 AM | 2.514240 | 6.703200 | 3.888 | 10.367 | 13998.213 | 37320.551 | -23322.338 | 706871.103 | 16.228 | 3.50 | 1:00 AM |
| 2:00 AM | 2.514240 | 6.703200 | 3.888 | 10.367 | 13998.213 | 37320.551 | -23322.338 | 683548.765 | 15.692 | 4.37 | 2:00 AM |
| 3:00 AM | 2.514240 | 6.703200 | 3.888 | 10.367 | 13998.213 | 37320.551 | -23322.338 | 660226.427 | 15.157 | 5.24 | 3:00 AM |
| 4:00 AM | 2.514240 | 6.703200 | 3.888 | 10.367 | 13998.213 | 37320.551 | -23322.338 | 636904.089 | 14.621 | 6.12 | 4:00 AM |
| 5:00 AM | 2.514240 | 6.703200 | 3.888 | 10.367 | 13998.213 | 37320.551 | -23322.338 | 613581.750 | 14.086 | 6.99 | 5:00 AM |
| 6:00 AM | 2.514240 | 6.703200 | 3.888 | 10.367 | 13998.213 | 37320.551 | -23322.338 | 590259.412 | 13.550 | 7.87 | 6:00 AM |
| 7:00 AM | 2.514240 | 0.000000 | 3.888 | 0.000 | 13998.213 | 0.000 | 13998.213 | 604257.626 | 13.872 | 7.34 | 7:00 AM |
| 8:00 AM | 2.514240 | 0.000000 | 3.888 | 0.000 | 13998.213 | 0.000 | 13998.213 | 618255.839 | 14.193 | 6.82 | 8:00 AM |
| 9:00 AM | 2.514240 | 0.000000 | 3.888 | 0.000 | 13998.213 | 0.000 | 13998.213 | 632254.052 | 14.515 | 6.29 | 9:00 AM |
| 10:00 AM | 2.514240 | 0.000000 | 3.888 | 0.000 | 13998.213 | 0.000 | 13998.213 | 646252.265 | 14.836 | 5.77 | 10:00 AM |
| 11:00 AM | 2.514240 | 0.000000 | 3.888 | 0.000 | 13998.213 | 0.000 | 13998.213 | 660250.479 | 15.157 | 5.24 | 11:00 AM |
| 12:00 PM | 2.514240 | 0.000000 | 3.888 | 0.000 | 13998.213 | 0.000 | 13998.213 | 674248.692 | 15.479 | 4.72 | 12:00 PM |
| 1:00 PM | 2.514240 | 0.000000 | 3.888 | 0.000 | 13998.213 | 0.000 | 13998.213 | 688246.905 | 15.800 | 4.19 | 1:00 PM |
| 2:00 PM | 2.514240 | 0.000000 | 3.888 | 0.000 | 13998.213 | 0.000 | 13998.213 | 702245.119 | 16.121 | 3.67 | 2:00 PM |
| 3:00 PM | 2.514240 | 0.000000 | 3.888 | 0.000 | 13998.213 | 0.000 | 13998.213 | 716243.332 | 16.443 | 3.14 | 3:00 PM |
| 4:00 PM | 2.514240 | 0.000000 | 3.888 | 0.000 | 13998.213 | 0.000 | 13998.213 | 730241.545 | 16.764 | 2.62 | 4:00 PM |
| 5:00 PM | 2.514240 | 0.000000 | 3.888 | 0.000 | 13998.213 | 0.000 | 13998.213 | 744239.758 | 17.085 | 2.09 | 5:00 PM |
| 6:00 PM | 2.514240 | 0.000000 | 3.888 | 0.000 | 13998.213 | 0.000 | 13998.213 | 758237.972 | 17.407 | 1.57 | 6:00 PM |
| 7:00 PM | 2.514240 | 0.000000 | 3.888 | 0.000 | 13998.213 | 0.000 | 13998.213 | 772236.185 | 17.728 | 1.04 | 7:00 PM |
| 8:00 PM | 2.514240 | 0.000000 | 3.888 | 0.000 | 13998.213 | 0.000 | 13998.213 | 786234.398 | 18.049 | 0.52 | 8:00 PM |
| 9:00 PM | 2.514240 | 0.000000 | 3.888 | 0.000 | 13998.213 | 0.000 | 13998.213 | 800232.611 | 18.371 | -0.01 | 9:00 PM |

120.657601
2.513700 Set Out Flow
2.513700 adf
1746 GPM

# ATTACHMENT 3 – WORK PLAN

# APPENDIX I

# Water Reuse Pipelines Project 60% Construction Plans and Engineers Estimate of Probable Construction Cost, December 2010

UTILITY CONTACTS

COMCAST
JEFF GRISSOM OR DANA JOHNSON
1031 N. PLAZA DRIVE AC SQUARED INC.
VISALIA CA 93291 (559) 353-2498 EXT. 126
(559) 735-2104

THE GAS COMPANY
CURTIS SKINNER (DISTRIBUTION)
404 N. TIPTON STREET
VISALIA CA 93292
(559) 739-2331

CARLOS GAETA (TRANSMISSION)
9400 OAKDALE AVENUE
CHATSWORTH, CA 91311-6511
(213) 220-9682

AT&T
DEBBIE SNEED
P.O. BOX 2666
VISALIA CA 93279
(559) 739-6646

SOUTHERN CALIFORNIA EDISON
JON BIMAT
2425 S. BLACKSTONE AVENUE
TULARE CA 93274
(559) 685-3202

CALIFORNIA WATER SERVICE
TOM BRASSFIELD OR GERRY NEAL
216 N. VALLEY OAKS DRIVE
VISALIA CA 93292
(559) 624-1650

CITY OF VISALIA
SANITARY SEWER AND STORM WATER COLLECTION
NAME
7579 AVENUE 288 (WWTP)
VISALIA CA 93277
(559) 713-4403

CITY OF VISALIA
STREET DEPARTMENT
NAME
336 N. BEN MADDOX WAY
VISALIA, CA 93292
(559) 713-4258

CITY OF VISALIA
DIRECTOR OF URBAN FORESTRY
DAVID PENDERGRAFT
336 N. BEN MADDOX WAY
VISALIA, CA 93292
(559) 713-4295

TULARE COUNTY RMA
ENCROACHMENT PERMITS
5961 S. MOONEY BLVD.
VISALIA, CA 93277
(559) 733-6653

# CITY OF VISALIA

## WATER CONSERVATION PLANT UPGRADES

JANUARY 2011
(90% DESIGN SUBMITTAL)

VOLUME II
RECYCLED WATER PIPELINE

## PROJECT NUMBER 197909V1

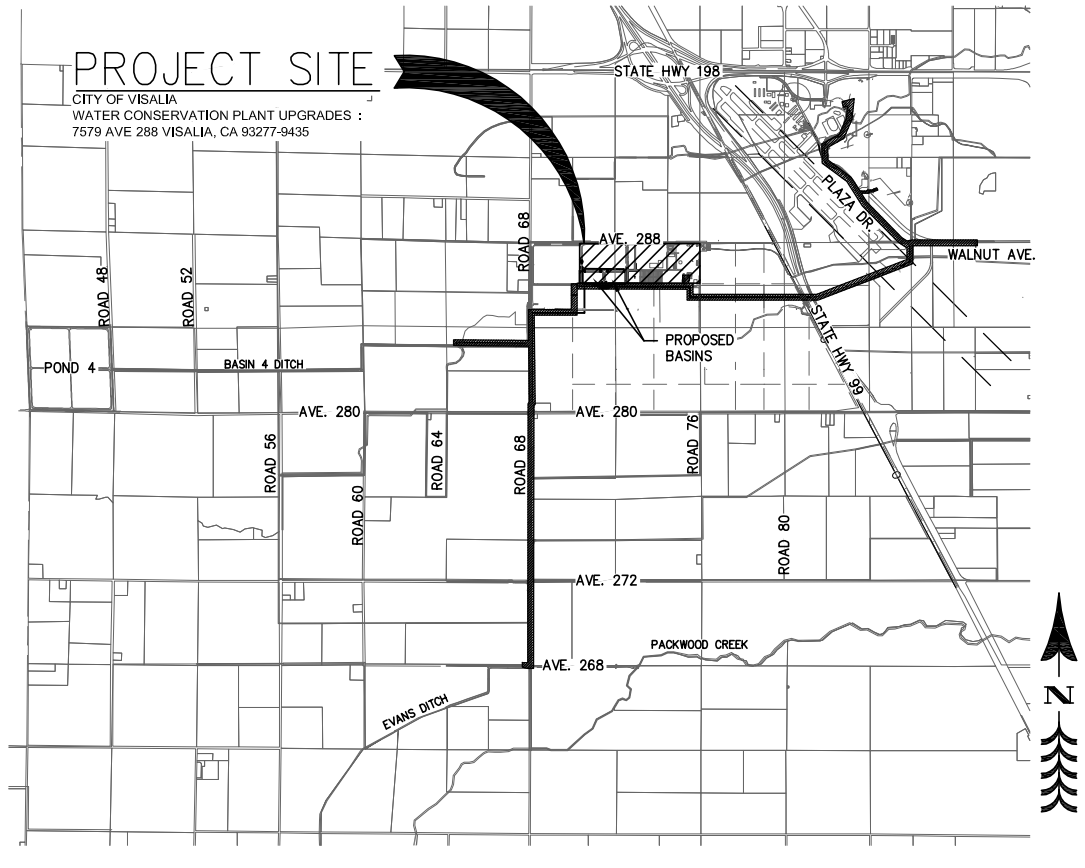


VICINITY MAP
SCALE: 1" = 3000'

NOT FOR CONSTRUCTION

ENGINEER'S STATEMENT:

THESE PLANS AND SPECIFICATIONS WERE PREPARED BY ME OR UNDER MY DIRECTION AND TO THE BEST OF MY KNOWLEDGE AND BELIEF COMPLY WITH CITY OF VISALIA ORDINANCES, STANDARDS, AND INCLUDE ALL IMPROVEMENT REQUIREMENTS OF THE ADVISORY AGENCY OR OTHER REVIEW BOARD.

ANY ERRORS, OMISSIONS OR DEVIATIONS FROM THOSE ORDINANCES OR STANDARDS ENCOUNTERED DURING CONSTRUCTION SHALL BE CORRECTED AND SUCH CORRECTIONS REFLECTED ON THE PLANS AND SUBMITTED TO CITY ENGINEER.

JOHN S. DUTTON, 24,673 DATE

Know what's **below.** **Call** before you dig.

| REV. | DATE | BY | DESCRIPTION |
|---|---|---|---|

APPROVED BY: R.C.E. 047262
ENGINEERING SERVICES MANAGER FOR CITY ENGINEER
DATE:

APPROVED BY: R.C.E. 047262
ENGINEERING SERVICES MANAGER FOR CITY ENGINEER
DATE:

CITY OF VISALIA
ENGINEERING DEPARTMENT
336 NORTH BEN MADDOX WAY
VISALIA CA. 93292


PARSONS
100 WEST WALNUT STREET
PASADENA, CA 91124
OFFICE: 626.440.2000
FAX: 626.440.2630
WWW.PARSONS.COM


PROJECT NAME: CITY OF VISALIA
WATER CONSERVATION PLANT UPGRADES

SHEET TITLE: RECYCLED WATER PIPELINE
GENERAL
TITLE SHEET


EST. 1968
PROVOST & PRITCHARD
CONSULTING GROUP
An Employee Owned Company
130 NORTH GARDEN STREET
VISALIA, CALIFORNIA 93291-6362
559/636-1166 FAX 559/636-1177
www.ppeng.com



COPYRIGHT 2010 by PROVOST & PRITCHARD ENGINEERING GROUP, INC. ALL RIGHTS RESERVED
The firm of Provost & Pritchard Engineering Group, Inc. expressly reserves its common law copyright and other applicable property rights in these plans. These plans are not to be reproduced, changed, or copied in any form or manner whatsoever, nor are they to be assigned to a third party without first obtaining the written permission and consent of Provost & Pritchard Engineering Group, Inc. In the event of unauthorized reuse of these plans by a third party, the third party shall hold the firm of Provost & Pritchard Engineering Group, Inc. harmless, and shall bear the cost of Provost & Pritchard Engineering Group, Inc.'s legal fees associated with defending and enforcing these rights.


| | |
|---|---|
| ISSUE DATE: | 12-6-2010 |
| CHECKED BY: | |
| DESIGNED BY: | |
| DRAWN BY: | P&P |
| SCALE: | AS NOTED |
| DWG. NO.: | R-1 |
| SHEET | OF |


V:\Clients\Parsons-1979\197909V1-Visalia WCP Pipelines\DWG\SHEET\197909V1-GN-COVER last saved by MICHAELB on 12/29/10 plotted 4/5/2010 12:16:10 PM

## Sheet List Table

| Sheet Number | Sheet Title |
|---|---|
| GENERAL | |
| R-1 | TITLE SHEET |
| R-1.1 | SHEET INDEX |
| R-2 | LEGEND, ABBREVIATIONS & NOTES |
| R-3 | OVERALL LAYOUT |
| R-4 | STATIONING LAYOUT |
| PLAN & PROFILE: BASIN 4 DITCH | |
| R-5 | STA 441-449 |
| R-6 | STA 449-457 |
| R-7 | STA 457-462 |
| R-8 | STA 462-466 |
| PLAN & PROFILE: AVE 268 | |
| R-9 | |
| PLAN & PROFILE: ROAD 68 | |
| R-10 | STA 124-132 |
| R-11 | STA 132-140 |
| R-12 | STA 140-148 |
| R-13.1 | STA 148-156 |
| R-13.2 | AVE 272 JACK & BORE |
| R-14 | STA 156-164 |
| R-15 | STA 164-172 |
| R-16 | STA 172-180 |
| R-17 | STA 180-188 |
| R-18 | STA 188-196 |
| R-19 | STA 196-204 |
| R-20 | STA 204-212 |
| R-21 | STA 212-220 |
| R-22 | STA 220-228 |
| R-23 | STA 228-236 |
| R-24 | STA 236-237 |
| PLAN & PROFILE: WCP EAST WEST PIPELINE | |
| R-25 | STA 500-507 |
| R-26 | |
| R-27 | STA 515-517 |
| R-28 | STA 237-245 |
| R-29 | STA 515-517-BASIN OUTLET |
| R-30 | STA 245-252-BASIN OUTLET |
| R-31 | STA 515-523-BASIN OUTLET |
| R-32 | STA 523-531-BASIN OUTLET |
| R-33 | STA 517-523 |
| R-34 | STA 523-531 |
| R-35 | STA 531-538 |
| R-36 | STA 538-546 |
| R-37 | STA 546-550 |
| R-38 | STA 550 |
| R-39 | STA 550-554 |
| R-40 | STA 554-562 |
| R-41 | STA 562-570 |
| R-42 | STA 570-578 |
| R-43 | STA 578-584 |
| R-44.1 | STA 584-590 |
| R-44.2 | UPRR BORE DETAIL |
| R-44.3 | STATE HWY 99 BORE DETAIL |
| PLAN & PROFILE: HWY 99 EAST | |
| R-45 | STA 600-608 |
| R-46 | STA 608-616 |
| R-47 | STA 616-624 |
| R-48 | STA 624-632 |
| R-49 | STA 632-640 |
| PLAN & PROFILE: PLAZA DR & WALNUT AVE | |
| R-50.1 | STA 700-708 |
| R-50.2 | STA 30-31-PLAZA PARK POND |
| R-51 | STA 708-716 |
| R-52 | STA 716-724 |
| R-53 | STA 724-732 |
| R-54.1 | STA 732-740 |
| R-54.2 | STA 10-16-GOLF COURSE POND 2 |
| R-55 | STA 740-748 |
| R-56 | STA 748-756 |
| R-57 | STA 756-764 |
| R-58 | STA 764-772 |
| R-59 | STA 772-780 |
| R-60 | STA 780-END |
| SECTIONS | |
| R-61 | SECTIONS 1 |
| R-62 | SECTIONS 2 |
| PROPOSED BASIN | |
| R-63 | BASIN GRADING PLAN |
| R-64 | |
| R-65 | BASIN CROSS SECTIONS |
| R-66 | BASIN PIPING PLAN |
| R-67 | BASIN INLET & OUTLET STRUCTURE |
| R-68 | BASIN EMERGENCY SPILLWAY |
| IRRIGATION TURNOUTS | |
| R-69 | SITE PLAN - AG TURNOUT AG1A & AG1B |
| R-70 | SITE PLAN - AG TURNOUT AG2 & PP1 |
| R-71 | SITE PLAN - AG TURNOUT GC1 & GC2 |

## Sheet List Table

| Sheet Number | Sheet Title |
|---|---|
| RD 68 & AVE 280 INTERSECTION | |
| R-72 | RD 68 & AVE 280 INTERSECTION |
| R-73 | RD 68 & AVE 280 DETAILS |
| TRAFFIC CONTROL | |
| R-74 | TRAFFIC CONTROL PLAN |
| PUMP STATION | |
| R-75 | PUMP STATION SITE PLAN |
| R-76 | PUMP STATION STRUCTURE |
| R-77 | PUMP STATION STRUCTURE SECTIONS |
| R-78 | DISTRIBUTION BOX STRUCTURAL SECTIONS |
| R-79 | PUMP STATION STRUCTURAL SECTIONS |
| R-80 | PIPE MANIFOLD SECTIONS |
| R-81 | BASIN INLET PIPE SECTIONS |
| CONCRETE STRUCTURES | |
| R-82 | STA 441+50 & STA 898+00 STRUCTURE |
| R-83 | |
| R-84 | STA 465+00 DISTRIBUTION BOX |
| R-85 | STA 516+00 DISTRIBUTION BOX |
| R-86 | STA 516+00 INLET STRUCTURE |
| R-87 | STA 517+00 JUNCTION BOX |
| DETAILS | |
| R-88 | DETAILS 1 |
| R-89 | DETAILS 2 |
| R-90 | DETAILS 3 |
| R-91 | DETAILS 4 |
| R-92 | CITY & COUNTY STD. DETAILS |

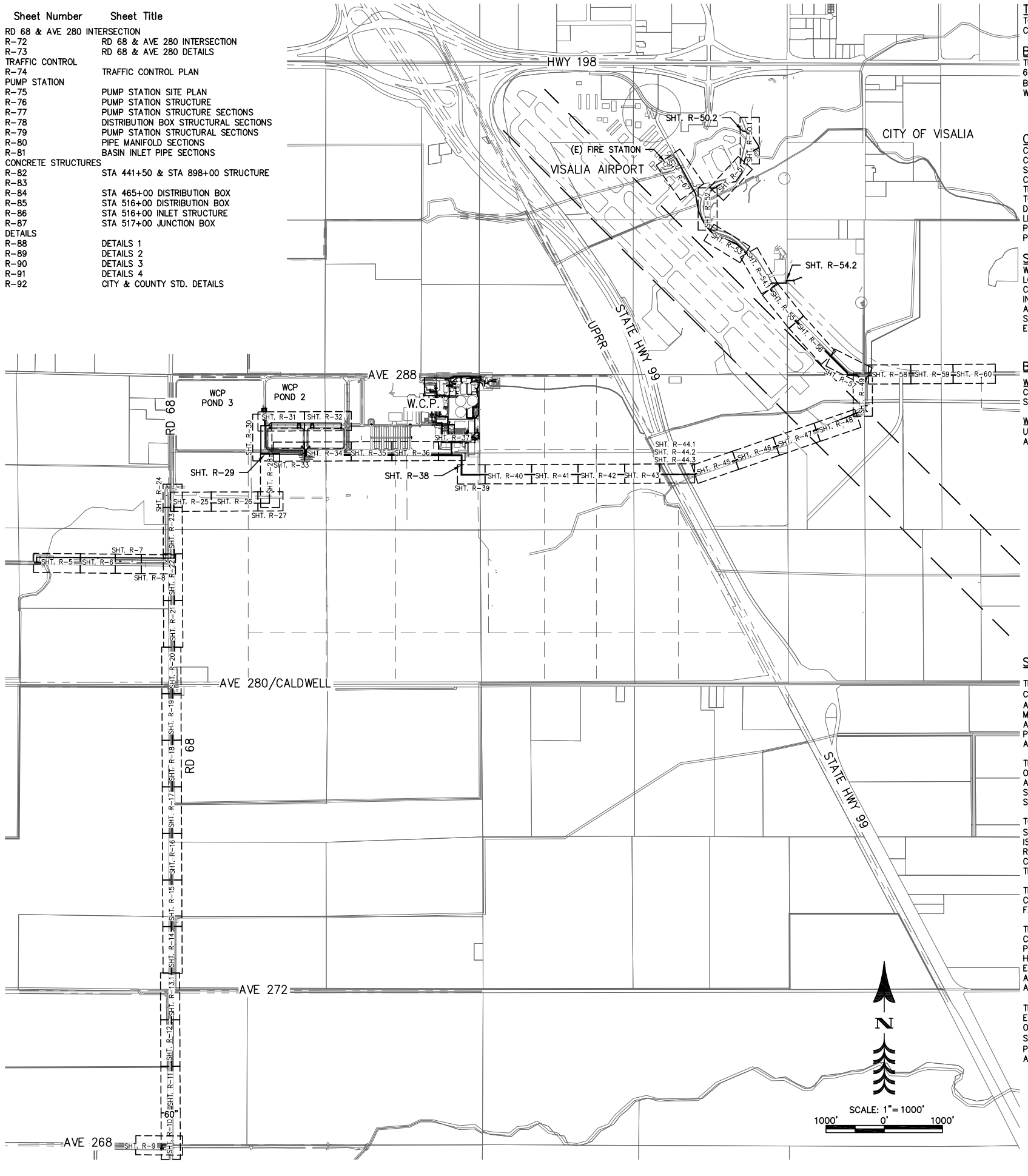


## TOPOGRAPHY NOTE

TOPOGRAPHY SHOWN IS BASE UPON FIELD SURVEYS COMPLETED NOVEMBER 2010.

## BASIS OF BEARINGS

THE WEST LINE OF THE NORTHWEST QUARTER OF SECTION 6, TOWNSHIP 19 SOUTH, RANGE 24 EAST, MOUNT DIABLO BASE AND MERIDIAN, TAKEN TO BE NORTH 00°14'12" WEST, AS MEASURED BY GPS OBSERVATIONS.

## CONSULTING ENGINEERS AND LAND SURVEYORS OF CALIFORNIA

CONSTRUCTION CONTRACTOR AGREES THAT IN ACCORDANCE WITH GENERALLY ACCEPTED CONSTRUCTION PRACTICES, CONSTRUCTION CONTRACTOR WILL BE REQUIRED TO ASSUME SOLE AND COMPLETE RESPONSIBILITY FOR JOB SITE CONDITIONS DURING THE COURSE OF CONSTRUCTION OF THE PROJECT, INCLUDING SAFETY OF ALL PERSONS AND PROPERTY, THAT THIS REQUIREMENT SHALL BE MADE TO APPLY CONTINUOUSLY AND NOT BE LIMITED TO NORMAL WORKING HOURS, AND CONSTRUCTION CONTRACTOR FURTHER AGREES TO DEFEND, INDEMNIFY AND HOLD DESIGN PROFESSIONAL HARMLESS FROM ANY AND ALL LIABILITY, REAL AND ALLEGED, IN CONNECTION WITH THE PERFORMANCE OF WORK ON THIS PROJECT, EXCEPTING LIABILITY ARISING FROM THE SOLE NEGLIGENCE OF DESIGN PROFESSIONAL.

## SPECIAL NOTE

WHERE UNDERGROUND AND SURFACE STRUCTURES ARE SHOWN ON THE PLANS, THE LOCATIONS, DEPTH AND DIMENSIONS OF STRUCTURES ARE BELIEVED TO BE REASONABLY CORRECT, BUT ARE NOT GUARANTEED. SUCH STRUCTURES ARE SHOWN FOR THE INFORMATION OF THE CONTRACTOR, BUT INFORMATION SO GIVEN IS NOT TO BE CONSTRUED AS A REPRESENTATION THAT SUCH STRUCTURES WILL, IN ALL CASES, BE FOUND WHERE SHOWN, OR THAT THEY REPRESENT ALL OF THE STRUCTURES WHICH MAY BE ENCOUNTERED.

## BENCH MARKS

WCP BENCHBARK
CHISELED BOX ON THE CONCRETE WALL ON THE SOUTH SIDE OF TRICKLING FILTER #4
ELEVATION = 299.63' PLANT DATUM

W 459 BENCHMARK
USC & GS BRASS DISK STAMPED "W 459-1954" AT VISALIA MUNICIPAL AIRPORT
ELEVATION = 292.28' PLANT DATUM
= 290.414' CITY DATUM (NGVD29)

## SITE SAFETY AND PROTECTION NOTES

THE DUTY OF THE ENGINEER, OWNER OR ITS AGENTS TO CONDUCT CONSTRUCTION REVIEW OF THE CONTRACTOR'S PERFORMANCE AND THE UNDERTAKING OF INSPECTIONS OR THE GIVING OF INSTRUCTIONS AS AUTHORIZED HEREIN IS NOT INTENDED TO INCLUDE REVIEW OF THE ADEQUACY OF THE CONTRACTOR'S SAFETY MEASURES IN, ON, OR NEAR THE CONSTRUCTION SITE AND SHALL NOT BE CONSTRUED AS SUPERVISION OF THE ACTUAL CONSTRUCTION NOR MAKE THE ENGINEER, OWNER OR ITS AGENTS RESPONSIBLE FOR PROVIDING A SAFE PLACE FOR THE PERFORMANCE OF WORK BY THE CONTRACTOR, SUBCONTRACTORS, OR SUPPLIERS, OR FOR ACCESS, VISITS, USE, WORK, TRAVEL OR OCCUPANCY BY ANY PERSON.

THE CONTRACTOR SHALL HAVE AT THE WORK SITE, COPIES OR SUITABLE EXTRACTS OF CONSTRUCTION SAFETY ORDERS, ISSUED BY CAL-OSHA. CONTRACTOR SHALL COMPLY WITH PROVISIONS OF THESE AND ALL OTHER APPLICABLE LAWS, ORDINANCES AND REGULATIONS. THE CONTRACTOR MUST COMPLY WITH PROVISIONS OF THE SAFETY AND HEALTH REGULATIONS FOR CONSTRUCTION, PROMULGATED BY THE SECRETARY OF LABOR UNDER SECTION 107 OF THE CONTRACT WORK HOURS AND SAFETY STANDARDS ACT, AS SET FORTH IN TITLE 29 C.F.R.

TO PROTECT THE LIVES AND HEALTH OF CONTRACTORS EMPLOYEES UNDER THE CONTRACT, THE CONTRACTOR SHALL COMPLY WITH ALL PERTINENT PROVISIONS OF THE "MANUAL OF ACCIDENT PREVENTION IN CONSTRUCTION" ISSUED BY THE ASSOCIATED GENERAL CONTRACTORS OF AMERICA, INC., AND SHALL MAINTAIN AN ACCURATE RECORD OF ALL CASES OF DEATH, OCCUPATIONAL DISEASE, AND INJURY REQUIRING MEDICAL ATTENTION OR CAUSING LOSS OF TIME FROM WORK, ARISING OUT OF AND IN THE COURSE OF EMPLOYMENT OR WORK UNDER THE CONTRACT.

THE CONTRACTOR ALONE SHALL BE RESPONSIBLE FOR THE SAFETY, EFFICIENCY, AND ADEQUACY OF CONTRACTOR FACILITIES, APPLIANCES, AND METHODS AND FOR ANY DAMAGE, WHICH MAY RESULT FROM THEIR FAILURE OR THEIR IMPROPER CONSTRUCTION, MAINTENANCE OR OPERATION.

THE CONTRACTOR AGREES THAT IT SHALL ASSUME SOLE AND COMPLETE RESPONSIBILITY FOR JOB SITE CONDITIONS DURING THE COURSE OF CONSTRUCTION OF THIS PROJECT, INCLUDING SAFETY OF ALL PERSONS AND PROPERTY; THAT THIS REQUIREMENT SHALL APPLY CONTINUOUSLY AND NOT BE LIMITED TO NORMAL WORKING HOURS; AND THAT THE CONTRACTOR SHALL DEFEND, INDEMNIFY AND HOLD THE OWNER, PROVOST & PRITCHARD ENGINEERING GROUP, INC., AND THEIR RESPECTIVE AGENTS HARMLESS FROM ANY AND ALL LIABILITY, REAL OR ALLEGED, IN CONNECTION WITH THE PERFORMANCE OF WORK ON THIS PROJECT, EXCEPTING FOR LIABILITY ARISING FROM THE SOLE NEGLIGENCE OF OWNER, ENGINEER, OR THEIR RESPECTIVE AGENTS.

THE OWNER AND ITS AGENTS' SITE RESPONSIBILITIES ARE LIMITED SOLELY TO THE ACTIVITIES OF THEIR EMPLOYEES ON SITE. THESE RESPONSIBILITIES SHALL NOT BE INFERRED BY ANY PARTY TO MEAN THAT THE OWNER OR ITS AGENTS HAVE RESPONSIBILITY FOR SITE SAFETY. SAFETY IN, ON, OR ABOUT THE SITE IS THE SOLE AND EXCLUSIVE RESPONSIBILITY OF THE CONTRACTOR ALONE. THE CONTRACTOR'S METHODS OF WORK PERFORMANCE, SUPERINTENDENCE AND THE CONTRACTOR'S EMPLOYEES, AND SEQUENCING OF CONSTRUCTION ARE ALSO THE SOLE AND EXCLUSIVE RESPONSIBILITIES OF THE CONTRACTOR ALONE.

811 Know what's **below.** **Call** before you dig.

| REV. | DATE | BY | DESCRIPTION |
|---|---|---|---|
| | | | |

APPROVED BY: _____ R.C.E. 047282
ENGINEERING SERVICES MANAGER FOR CITY ENGINEER
DATE: _____

APPROVED BY: _____ R.C.E. 047282
ENGINEERING SERVICES MANAGER FOR CITY ENGINEER
DATE: _____

CITY OF VISALIA
ENGINEERING DEPARTMENT
336 NORTH BEN MADDOX WAY
VISALIA CA. 93292

PARSONS
100 WEST WALNUT STREET
PASADENA, CA 91124
OFFICE: 626.440.2000
FAX: 626.440.2630
WWW.P.PARSONS.COM

PROJECT NAME: CITY OF VISALIA
WATER CONSERVATION PLANT UPGRADES
RECYCLED WATER PIPELINE

SHEET TITLE: GENERAL
SHEET INDEX

EST. 1968
PROVOST & PRITCHARD
CONSULTING GROUP
An Employee Owned Company
130 NORTH GARDEN STREET
VISALIA, CALIFORNIA 93291-6362
559/636-1166 FAX 559/636-1177
www.ppeng.com

COPYRIGHT 2010 by PROVOST & PRITCHARD ENGINEERING GROUP, INC. ALL RIGHTS RESERVED
The firm of Provost & Pritchard Engineering Group, Inc. expressly reserves its common law copyright and other applicable property rights in these plans. These plans are not to be reproduced, changed, or copied in any form or manner whatsoever, nor are they to be assigned to a third party without first obtaining the written permission and consent of Provost & Pritchard Engineering Group, Inc. In the event of unauthorized reuse of these plans by a third party, the third party shall hold the firm of Provost & Pritchard Engineering Group, Inc. harmless, and shall bear the cost of Provost & Pritchard Engineering Group, Inc.'s legal fees associated with defending and enforcing these rights.

| | |
|---|---|
| ISSUE DATE: | 12-6-2010 |
| CHECKED BY: | |
| DESIGNED BY: | |
| DRAWN BY: | P&P |
| SCALE: | AS NOTED |
| DWG. NO.: | R-1.1 |
| SHEET | OF |

NOT FOR CONSTRUCTION

V:\Clients\Parsons-1979\197909V1-Visalia WCP Pipelines\DWG\SHEET\197909V1-GN-SHEET INDEX last saved by MIKEPR on 1/4/11 plotted 7/29/2010 3:20:22 PM

V:\Clients\Parsons-1979\197909V1-Visalia WCP Pipelines\DWG\SHEET\197909V1-GN-SHEET INDEX.dwg Jan 05, 2011 - 3:42pm

## ABBREVIATIONS

| | |
|---|---|
| AB | AGGREGATE BASE |
| AC | ASPHALT CONCRETE |
| AP | ANGLE POINT |
| APPROX | APPROXIMATE |
| APN | ASSESSOR'S PARCEL NUMBER |
| ASTM | AMERICAN SOCIETY FOR TESTING AND MATERIALS |
| AV | AIR VENT |
| BC | BEGIN CURVE |
| BLDG | BUILDING |
| BO | BOLLARD |
| BTM | BOTTOM |
| CA | CALIFORNIA |
| CFS | CUBIC FEET PER SECOND |
| CL | CLASS |
| ℄ | CENTERLINE |
| CLR | CLEARANCE |
| CMP | CORRUGATED METAL PIPE |
| CNS | COMPACTED NATIVE SOIL |
| CONC | CONCRETE |
| CONT | CONTINUOUS |
| CONST | CONSTRUCT/CONSTRUCTION |
| CR | CROWN |
| CY | CUBIC YARDS |
| DEMO | DEMOLISH/DEMOLITION |
| DI | DROP INLET |
| DIA, ø | DIAMETER |
| DIM | DIMENSION |
| DIP | DUCTILE IRON PIPE |
| DWG | DRAWING |
| (E) | EXISTING |
| EA | EACH |
| EF | EACH FACE |
| EG | EXISTING GRADE |
| EL, | ELEVATION |
| ELEC | ELECTRIC |
| ELL | ELBOW |
| EP | EDGE OF PAVEMENT |
| ESMT | EASEMENT |
| EW | EACH WAY |
| FG | FINISHED GRADE |
| ℄, FL | FLOW LINE |
| FNC | FENCE |
| FO | FIBER OPTIC |
| FT | FOOT/FEET |
| GB | GRADE BREAK |
| GPM | GALLONS PER MINUTE |
| GS | GAS |
| GSV | GAS VALVE |
| GUY | GUY WIRE |
| GV | GATE VALVE |
| HD | HEAD |
| HGL | HYDRAULIC GRADE LINE |
| HORIZ | HORIZONTAL |
| HP | HIGH PRESSURE |
| HWL | HIGH WATER LEVEL |
| IN | INCH |
| INV | INVERT |
| IRR | IRRIGATION |
| LF | LINEAR FEET |
| LT | LEFT |
| MAX | MAXIMUM |
| MB | MAILBOX |
| MCC | MOTOR CONTROL CENTER |
| MH | MANHOLE |
| MIN | MINIMUM |
| MISC | MISCELLANEOUS |
| NTS | NOT TO SCALE |
| OC | ON CENTER |
| OD | OUTSIDE DIAMETER |
| (P) | PROPOSED |
| ℙ | PROPERTY LINE |
| PP | POWER POLE |
| R | RADIUS |
| RCP | REINFORCED CONCRETE PIPE |
| RD | RELATIVE DENSITY |
| RE | REFERENCE |
| REQD | REQUIRED |
| REV | REVISION |
| RR | RAILROAD |
| RT | RIGHT |
| R/W | RIGHT OF WAY |
| S= | SLOPE |
| SCH | SCHEDULE |
| SD | STORM DRAIN |
| SEC | SECTION |
| SF | SQUARE FEET |
| SP | SERVICE POLE |
| SQ | SQUARE |
| SS | SANITARY SEWER |
| SS | STAINLESS STEEL |
| STA | STATION |
| STD | STANDARD |
| STP | STAND PIPE |
| TB | TOP OF BANK |
| TBM | TEMPORARY BENCHMARK |
| TC | TOP OF CURB |
| TCE | TEMPORARY CONSTRUCTION EASEMENT |
| TELE | TELEPHONE |
| TF | TOP OF FOOTING |
| TG | TOP OF GRATE |
| TL | TOP OF LINING |
| TOE | TOE OF SLOPE |
| TOP | TOP OF SLOPE |
| TP | TELEPHONE POLE |
| TS | TOP OF STRUCTURE |
| TYP | TYPICAL |
| TWL | TOP OF WALL |
| UG | UNDERGROUND |
| UP | UTILITY POLE |
| VERT | VERTICAL |
| W | WATER |
| WL | WATER LINE |
| WM | WATER METER |
| WV | WATER VALVE |
| WW | WASTE WATER |
| W/ | WITH |
| W/O | WITHOUT |

## LINETYPES

| EXISTING | NEW | DESCRIPTION |
|---|---|---|
| | | WATER LEVEL |
| | | BARRICADE |
| 123 | 123 | CONTOUR (MAJOR) |
| | | CONTOUR (MINOR) |
| | | EMBANKMENT TOE |
| | | EMBANKMENT TOP |
| X | X | FENCE |
| | | RAILROAD |
| | | RETAINING WALL |
| | | SWALE CENTERLINE |
| | | SWALE W/FLOW ARROWS |
| | | WATER (LAKE/POND) |
| | | WATER (MARSH/SWAMP) |
| E | | ELECTRIC (AERIAL) |
| E | | ELECTRIC (BURIED) |
| FO | | FIBER-OPTIC |
| G | | GAS |
| | UTILITY SIZE LABEL | IRRIGATION |
| O | | OIL |
| S | UTILITY SIZE LABEL | SANITARY SEWER |
| | | SIGNAL INTERCONNECT (BURIED) |
| D | UTILITY SIZE LABEL | STORM DRAINAGE |
| T | | TELEPHONE (AERIAL) |
| T | | TELEPHONE (BURIED) |
| TV | | TELEVISION (AERIAL LINE) |
| TV | | TELEVISION (BURIED LINE) |
| W | | WATER |
| | | CENTERLINE |
| | | EASEMENT |
| | | PROPERTY LINE |
| | | RIGHT-OF-WAY |
| | | SECTION LINE |
| | | QUARTER SECTION LINE |
| | | SIXTEENTH SECTION LINE |
| | | REVISION CLOUD |

NOT FOR CONSTRUCTION

## RECYCLED WATER GENERAL NOTES

1. ALL WORK SHALL BE DONE IN ACCORDANCE WITH THE CITY OF VISALIA ENGINEERING IMPROVEMENT STANDARDS.
2. CONTRACTOR SHALL NOTIFY THE CITY OF VISALIA OF ANY AND ALL CONFLICTS BETWEEN THIS SET OF CONSTRUCTION DRAWINGS AND THE ACTUAL SITE CONDITIONS PRIOR TO COMMENCING WORK. CONTACT JIM ROSS AT (559) 713-4466.
3. BEFORE COMMENCING WORK, THE CONTRACTOR SHALL NOTIFY ALL UTILITY AGENCIES AND UTILITY COMPANIES OF THE CONTRACTOR'S INTENTION TO EXCAVATE AT OR NEAR EXISTING UTILITIES. CONTRACTOR SHALL VERIFY THE LOCATION OF ANY UTILITY IN THE WORK AREA. CONTRACTOR SHALL NOTIFY UNDERGROUND SERVICE ALERT (U.S.A.) TWO (2) WORKING DAYS PRIOR TO BEGINNING ANY EXCAVATION AT (811).
4. CONTRACTOR SHALL NOTIFY THE CITY OF VISALIA (PROJECT MANAGER) AT LEAST 8 DAYS PRIOR TO COMMENCING WORK SO THAT THE CITY MAY PRESERVE MONUMENTS AND BENCH MARKS, WHICH SHALL NOT BE DISTURBED WITHOUT THE CITY'S CONSENT. THE CONTRACTOR SHALL BE RESPONSIBLE FOR REPLACING DESTROYED BENCHMARKS.
5. CONTRACTOR SHALL EXPOSE ALL EXISTING UNDERGROUND PIPELINES OR OTHER UNDERGROUND OBSTRUCTIONS TO VERIFY THAT THERE ARE NO GRADE CONFLICTS PRIOR TO LAYING ANY GRAVITY PIPELINES.
6. WHERE UNDERGROUND AND SURFACE STRUCTURES ARE SHOWN ON THIS SET OF DRAWINGS, THE LOCATIONS, DEPTH, AND DIMENSIONS OF STRUCTURES ARE BELIEVED TO BE REASONABLY CORRECT, BUT ARE NOT GUARANTEED. THE INFORMATION SO GIVEN IS NOT TO BE CONSTRUED AS A REPRESENTATION THAT SUCH STRUCTURES WILL, IN ALL CASES BE FOUND WHERE SHOWN, OR THAT THEY REPRESENT ALL THE STRUCTURES WHICH MAY BE ENCOUNTERED.
7. CONTRACTOR AGREES THAT IN ACCORDANCE WITH GENERALLY ACCEPTED CONSTRUCTION PRACTICES, CONTRACTOR WILL BE REQUIRED TO ASSUME SOLE AND COMPLETE RESPONSIBILITY FOR THE JOB SITE CONDITIONS DURING CONSTRUCTION, INCLUDING SAFETY OF ALL PERSONS AND PROPERTY. THIS REQUIREMENT SHALL BE MADE TO APPLY CONTINUOUSLY AND NOT BE LIMITED TO WORKING HOURS.
8. THE CONTRACTOR SHALL OBTAIN AN ENCROACHMENT PERMIT FOR ALL WORK PERFORMED WITHIN EXISTING STREET RIGHTS OF WAY.
9. NO DRAINAGE RUNOFF TO ADJACENT PROPERTY AND NO ON-SITE WATER RETENTION. ALL STORM DRAINAGE FACILITIES ARE TO BE CONSTRUCTED IN ACCORDANCE WITH CITY OF VISALIA STANDARD SPECIFICATIONS AND STANDARD PLANS.
10. ALL GRADING SHALL COMPLY TO APPENDIX J OF THE 2007 CALIFORNIA BUILDING CODE.
11. PROVIDE COMPACTION REPORTS PREPARED BY CITY APPROVED TESTING AGENCY FOR ALL LOOSE FILLS.
12. A GEOTECHNICAL ENGINEERING INVESTIGATION WAS PREPARED XXXXXXXXXXXXX (REPORT NO: ########) ON XXXXXXXX X, XXXX FOR THIS PROJECT. CONTRACTOR SHALL FOLLOW AND PROVIDE ALL RECOMMENDATIONS AS OUTLINED IN SOILS REPORT.
13. A SOILS GRADING REPORT PREPARED BY THE SOILS ENGINEER AND IN CONFORMANCE WITH THE 2007 CALIFORNIA BUILDING CODE (CBC) SECTION 3318 SHALL BE SUBMITTED UPON COMPLETION OF GRADING.
14. RECOMMENDATIONS, AS OUTLINED IN THE PRELIMINARY SOILS REPORT SHALL BECOME REQUIREMENTS FOR THIS DEVELOPMENT.
15. THE CONTRACTOR SHALL MAINTAIN DUST CONTROL AT THE SITE OF WORK AT ALL TIMES.
16. ANY INSPECTION TO BE PERFORMED BY THE CITY SHALL REQUIRE A MINIMUM OF 24 HOUR WRITTEN NOTICE.
17. ALL ASPHALT CONCRETE PAVING SHALL BE APPLIED TO DRY GROUND IN DRY WEATHER WITH TEMPERATURES ABOVE 45 DEGREES. ALL WORK RELATED TO PAVING SHALL CONFORM TO ANY APPLICABLE SECTIONS OF THE CALTRANS STANDARD SPECIFICATIONS LATEST EDITION, THE PROJECT SPECIFICATIONS AND CITY OF VISALIA REQUIREMENTS.
18. ALL MANHOLE COVERS SHALL BE KEPT A MINIMUM OF 0.5' BELOW AGGREGATED BASE UNTIL COMPLETION OF PAVING AT WHICH TIME THE COVERS ARE TO BE BROUGHT TO GRADE.
19. LOCATION AND RELOCATION OF POWER POLES AND LOCATION AND REMOVAL OF IRRIGATION LINES AND RISERS SHALL BE THE RESPONSIBILITY OF THE CONTRACTOR.
20. INSTALL TRAFFIC CONTROL SIGNS APPROVED BY THE CITY OF VISALIA OR COUNTY OF TULARE, PRIOR TO ANY WORK.
21. ALL SEWER, STORM DRAIN AND TELEPHONE MANHOLES AFFECTED BY THIS PROJECT SHALL BE ADJUSTED TO GRADE AS NECESSARY AND INCLUDED IN THIS WORK.
22. THE COST OF ALL REPEAT TESTING REQUIRED FOR ACCEPTANCE OF WORK SHALL BE FULLY BORNE BY THE CONTRACTOR.
23. A MINIMUM OF ONE (1) FOOT VERTICAL SEPARATION SHALL BE MAINTAINED BETWEEN WATER MAINS AND SERVICES, AND ALL SEWER LINES.
24. ANY STRIPING OR EXISTING TRAFFIC CONTROLS DISTURBED BY THIS PROJECT WILL REQUIRE REPLACEMENT IN KIND.
25. IF THE PROJECT IS SUBJECT TO THE PROVISIONS OF THE NATIONAL POLLUTANT DISCHARGE ELIMINATION SYSTEM (NPDES), A "NOTICE OF INTENT" (NOI) TO COMPLY WITH THE TERMS OF THE GENERAL PERMIT TO DISCHARGE STORM WATER ASSOCIATED WITH CONSTRUCTION ACTIVITY (WQ ORDER NO. 92-08-DWQ) MUST BE FILED WITH STATE WATER RESOURCES CONTROL BOARD IN SACRAMENTO BEFORE THE STORM WATER POLLUTION PREVENTION PLAN (SWPPP) BE PREPARED, CONTINUOUSLY CARRIED OUT, AND ALWAYS BE AVAILABLE FOR PUBLIC INSPECTION DURING NORMAL CONSTRUCTION HOURS.
26. ANYTHING ON THESE PLANS LABELED OR CALLED OUT AS "PROPOSED" IS CONSIDERED TO BE A PART OF THE SCOPE OF WORK FOR THIS PROJECT.
27. CONTRACTOR SHALL NOTIFY FARMER WEST OF ROAD 68 AND NORTH OF MILL CREEK WHEN CONTRACTOR.....
28. CONTRACTOR SHALL NOTIFY FARMERS ON AIRPORT PROPERTY AND SURROUNDING PROPERTIES WHEN CONTRACTOR.....

## HATCHES

| EXISTING | NEW | DESCRIPTION |
|---|---|---|
| | | AGGREGATE |
| | | CONCRETE |
| | | EARTH |
| | | RIP RAP |
| | | GRATING |

## SYMBOLS

| EXISTING | PROPOSED | DESCRIPTION |
|---|---|---|
| | | ELECTRIC METER |
| | | PAD MOUNTED TRANSFORMER |
| E | | ELECTRIC VAULT |
| | | UTILITY POLE |
| | | UTILITY POLE ANCHOR |
| E | | ELECTRIC MANHOLE |
| | | GAS METER |
| | | GAS VALVE |
| | | SAN. SEWER CLEAN OUT |
| | OR | SAN. SEWER MANHOLE |
| | | SSMH (ECCENTRIC CONE) |
| | | STORM DRAIN CATCH BASIN |
| | | STORM DRAIN INLET |
| | | STORM DRAIN CULVERT |
| | | STORM DRAIN MANHOLE |
| | | MAIL BOX |
| | | SIGN |
| | | YARD LIGHT |
| | | GUARD POST |
| | | CONTROL POINT |
| | | BENCH MARK |
| | | IRON PIPE |
| | | BLOCK CORNER MONUMENT |
| | | SURFACE MONUMENT |
| | | OWNERSHIP TIE |
| | | TELEPHONE RISER |
| T | | TELEPHONE VAULT |
| | | 2-NOZZLE HYDRANT |
| | | 3-NOZZLE HYDRANT |
| FD | | FIRE DEPT. CONNECTION |
| F | | FIRE VAULT |
| | | WATER METER |
| | | CANAL GATE |
| W | W | WELL |
| | | WATER VALVE |
| | | FENCE POST |
| | X | REVISION |
| | X | CONSTRUCTION CALLOUT |
| # / SHT | | DETAIL NUMBER / SHEET NUMBER — DETAIL CALLOUT |
| | | LINE BREAK |
| | | PIPE END (SCHEMATIC) |
| | | PIPE END |
| | | EMBANKMENT ARROW |
| HWL= XXX.XX | | HIGH WATER LINE |
| XXX.X± FG / MATCH (E) | | SPOT ELEVATION DESCRIPTION — SPOT ELEVATION |
| | | SECTION VIEW |

811 Know what's **below.** **Call** before you dig.

| REV. | DATE | BY | DESCRIPTION |
|---|---|---|---|
| | | | |

APPROVED BY: _____ R.C.E. 047262
ENGINEERING SERVICES MANAGER FOR CITY ENGINEER
DATE: _____

APPROVED BY: _____ R.C.E. 047262
ENGINEERING SERVICES MANAGER FOR CITY ENGINEER
DATE: _____

CITY OF VISALIA
ENGINEERING DEPARTMENT
336 NORTH BEN MADDOX WAY
VISALIA CA. 93292

PARSONS
100 WEST WALNUT STREET
PASADENA, CA 91124
OFFICE: 626.440.2000
FAX: 626.440.2630
WWW.PARSONS.COM

PROJECT NAME: CITY OF VISALIA
WATER CONSERVATION PLANT UPGRADES

SHEET TITLE: RECYCLED WATER PIPELINE
GENERAL
LEGEND, ABBREVIATIONS & NOTES

COPYRIGHT 2010 by PROVOST & PRITCHARD ENGINEERING GROUP, INC. ALL RIGHTS RESERVED
The firm of Provost & Pritchard Engineering Group, Inc. expressly reserves its common law copyright and other applicable property rights in these plans. These plans are not to be reproduced, changed, or copied in any form or manner whatsoever, nor are they to be assigned to a third party without first obtaining the written permission and consent of Provost & Pritchard Engineering Group, Inc. In the event of unauthorized reuse of these plans by a third party, the third party shall hold the firm of Provost & Pritchard Engineering Group, Inc. harmless, and shall bear the cost of Provost & Pritchard Engineering Group, Inc.'s legal fees associated with defending and enforcing these rights.

EST. 1968
PROVOST & PRITCHARD
CONSULTING GROUP
An Employee Owned Company
130 NORTH GARDEN STREET
VISALIA, CALIFORNIA 93291-6362
559/636-1166 FAX 559/636-1177
www.ppeng.com

| | |
|---|---|
| ISSUE DATE: | 12-6-2010 |
| CHECKED BY: | |
| DESIGNED BY: | |
| DRAWN BY: | P&P |
| SCALE: | AS NOTED |
| DWG. NO.: | R-2 |
| SHEET | OF |

V:\Clients\Parsons-1979\197909V1-Visalia WCP Pipelines\DWG\SHEET\197909V1-GN-LEGEND_ABBREV_NOTES last saved by MICHAELB on 12/28/10 2:36:07 PM
V:\Clients\Parsons-1979\197909V1-Visalia WCP Pipelines\DWG\SHEET\197909V1-GN-LEGEND_ABBREV_NOTES.dwg Jan 05, 2011 - 3:42pm

V:\Clients\Parsons-1979\197909V1-Visalia WCP Pipelines\DWG\SHEET\197909V1-GN-OVERALL LAYOUT last saved by MICHAELB on 1/5/11 plotted 5/4/2010 9:21:57 AM

V:\Clients\Parsons-1979\197909V1-Visalia WCP Pipelines\DWG\SHEET\197909V1-GN-OVERALL LAYOUT.dwg Jan 05, 2011 - 3:43pm

NOT FOR CONSTRUCTION

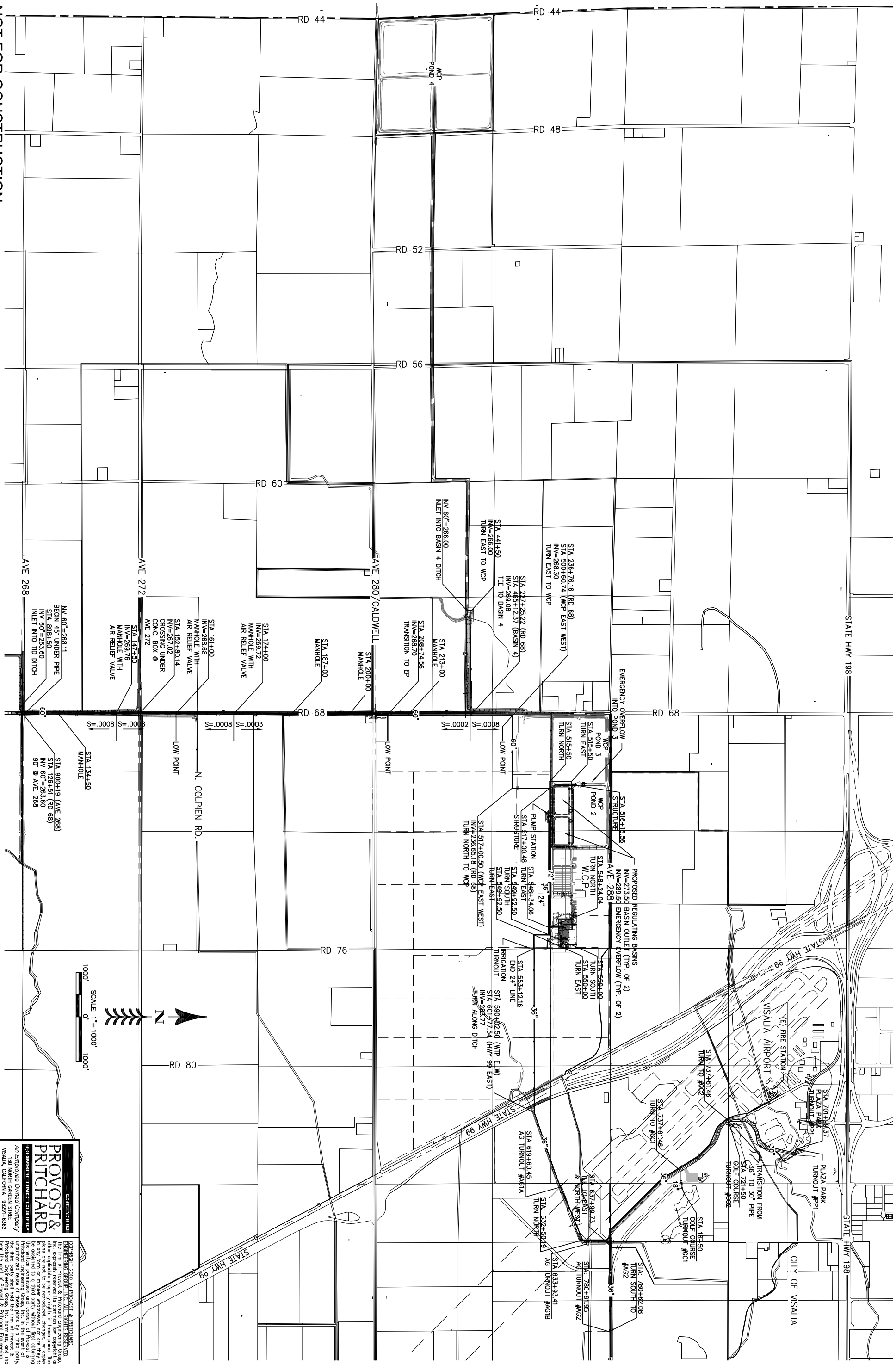


COPYRIGHT 2010 by PROVOST & PRITCHARD
ENGINEERING GROUP, INC. ALL RIGHTS RESERVED
The firm of Provost & Pritchard Engineering Group, Inc. expressly reserves its common law copyright and other applicable property rights in these plans. These plans are not to be reproduced, changed, or copied in any form or manner whatsoever, nor are they to be assigned to a third party without first obtaining the written permission and consent of Provost & Pritchard Engineering Group, Inc. In the event of unauthorized reuse of these plans by a third party, the third party shall hold the firm of Provost & Pritchard Engineering Group, Inc. harmless, and shall bear the cost of Provost & Pritchard Engineering Group, Inc.'s attorney's fees associated with defending and enforcing these rights.

PROVOST & PRITCHARD
ESTABLISHED 1966
CONSULTING GROUP
An Employee Owned Company
130 NORTH GARDEN STREET
VISALIA, CALIFORNIA 93291-6362
559/636-1166 FAX 559/636-1177
www.ppeng.com

PROJECT NAME:
# CITY OF VISALIA
## WATER CONSERVATION PLANT UPGRADES
SHEET TITLE:
## RECYCLED WATER PIPELINE
## GENERAL
## OVERALL LAYOUT

PARSONS
100 WEST WALNUT STREET
PASADENA, CA 91124
OFFICE: 626.440.2000
FAX: 626.440.6337
WWW.PARSONS.COM

CITY OF VISALIA
PUBLIC WORKS DEPARTMENT
336 NORTH BEN MADDOX WAY
VISALIA CA. 93292

APPROVED BY: _____ R.C.E. C47262
ENGINEERING SERVICES MANAGER FOR CITY ENGINEER
DATE: _____

APPROVED BY: _____ R.C.E. C47262
ENGINEERING SERVICES MANAGER FOR CITY ENGINEER
DATE: _____

| REV. | DATE | BY | DESCRIPTION |
|---|---|---|---|

ISSUE DATE: 12-6-2010
CHECKED BY:
DESIGNED BY:
DRAWN BY: P&P
SCALE: AS NOTED
DWG. NO: R-3
SHEET OF

Know what's **below.**
**Call** before you dig.

| ALIGNMENT | STA START | STA END | DESCRIPTION |
|---|---|---|---|
| ROAD 68 | 100+00 | 259+28.88 | BEGINS AT SECTION LINE 1/2 MILE SOUTH OF AVE 268. FOLLOWS SECTION LINE NORTH AND ENDS AT AVENUE 288. |
| BASIN 4 DITCH | 300+00 | 465+58.58 | BEGINS AT SECTION LINE ON ROAD 44 WEST OF BASIN 4. FOLLOWS SECTION LINE EAST TO NORTH SECTION LINE. AT STA 404+80, TURNS NORTH ALONG SECTION LINE AND CONTINUES TO PROPERTY LINE AT STA 412+35.12. FOLLOWS PROPERTY LINE EAST TO INTERSECTION OF SECTION LINE AT ROAD 68. |
| WTP EAST-WEST | 500+00 | 590+00 | BEGINS AT SECTION LINE ON ROAD 68. FOLLOWS SECTION LINE EAST FOR 9000'. |
| HWY 99 EAST | 599+50 | 657+31.29 | BEGINS AT INTERSECTION OF STATE R/W AND THE CENTER OF IRRIGATION DITCH. FOLLOWS APPROXIMATE CENTERLINE OF IRRIGATION DITCH TO SECTION LINE AT STA 632+81.21. |
| PLAZA DRIVE | 700+19 | 781+00 | CENTERLINE OF PLAZA DRIVE AND WALNUT AVENUE WITH STA 760+50 INTERSECTING STA 639+26.27 OF THE HWY 99 EAST ALIGNMENT. |
| AVENUE 268 | 835+81 | 934+00 | BEGINS AT CONCRETE STRUCTURE ON EVANS DITCH APPROXIMATELY 4000' SOUTHWEST OF AVENUE 268. FOLLOWS APPROXIMATE PROPERTY LINE ALONG EVANS DITCH TO SECTION LINE AT AVENUE 268. TURNS EAST AND FOLLOWS SECTION LINE TO PACKWOOD CREEK AT STA 934+00. |

STATE HWY 198
STATE HWY 99
CITY OF VISALIA
VISALIA AIRPORT
(E) FIRE STATION
PLAZA PARK TURNOUT #PP1
STA 700+00 (PLAZA_WALNUT) BEGIN PLAZA_WALNUT ALIGNMENT
GOLF COURSE TURNOUT #GC2
GOLF COURSE TURNOUT #GC1
STA 639+26.27 (HWY 99 EAST) STA 760+50 (PLAZA_WALNUT) INTERSECTION OF STATIONING LINES
WALNUT AVE.
AG TURNOUT #AG2
AG TURNOUT #AG1B
AG TURNOUT #AG1A
STA 588+484.39 (WCP EAST_WEST) =STA 600+00 (HWY 99 EAST)
RD 68
PROPOSED REGULATING BASINS
AVE 288
WCP POND 3
WCP POND 2
W.C.P.
PUMP STATION
IRRIGATION TURNOUT
STA 245+48.39 (RD 68) STA 500+00 (WCP EAST_WEST) INTERSECTION OF STATIONING LINES
RD 44
RD 48
RD 52
RD 56
RD 60
RD 76
RD 80
WCP POND 4
STA 300+00 (BASIN 4) BEGIN BASIN 4 ALIGNMENT
STA 441+50 (BASIN 4) INLET INTO BASIN 4 DITCH
STA 226+25.90 (RD 68) STA 464+58.58 (BASIN 4) INTERSECTION OF STATIONING LINES
AVE 280/CALDWELL
N. COLPIEN RD.
AVE 272
AVE 268
STA 898+50 (AVE 268) INLET INTO TID DITCH
STA 126+40.82 (RD 68) STA 900+00 (AVE 268) INTERSECTION OF STATIONING LINES)
STA 100+00 (RD 68) BEGIN RD 68 ALIGNMENT
SCALE: 1"= 1000'
1000' 0' 1000'

NOT FOR CONSTRUCTION

| REV. | DATE | BY | DESCRIPTION |
|---|---|---|---|

APPROVED BY: ENGINEERING SERVICES MANAGER FOR CITY ENGINEER R.C.E. 047282 DATE:
APPROVED BY: ENGINEERING SERVICES MANAGER FOR CITY ENGINEER R.C.E. 047282 DATE:

CITY OF VISALIA 336 NORTH BEN MADDOX WAY VISALIA CA. 93292

PARSONS
100 WEST WALNUT STREET PASADENA, CA 91124 OFFICE: 626.440.2000 FAX: 626.440.2630 WWW.PARSONS.COM

PROJECT NAME: CITY OF VISALIA WATER CONSERVATION PLANT UPGRADES
SHEET TITLE: RECYCLED WATER PIPELINE GENERAL STATIONING LAYOUT

EST. 1968 PROVOST& PRITCHARD CONSULTING GROUP
*An Employee Owned Company*
130 NORTH GARDEN STREET VISALIA, CALIFORNIA 93291-6362 559/636-1166 FAX 559/636-1177 www.ppeng.com

COPYRIGHT 2010 by PROVOST & PRITCHARD ENGINEERING GROUP, INC. ALL RIGHTS RESERVED
The firm of Provost & Pritchard Engineering Group, Inc. expressly reserves its common law copyright and other applicable property rights in these plans. These plans are not to be reproduced, changed, or copied in any form or manner whatsoever, nor are they to be assigned to a third party without first obtaining the written permission and consent of Provost & Pritchard Engineering Group, Inc. In the event of unauthorized reuse of these plans by a third party, the third party shall hold the firm of Provost & Pritchard Engineering Group, Inc. harmless, and shall bear the cost of Provost & Pritchard Engineering Group, Inc.'s legal fees associated with defending and enforcing these rights.

| | |
|---|---|
| ISSUE DATE: | 12-6-2010 |
| CHECKED BY: | |
| DESIGNED BY: | |
| DRAWN BY: | P&P |
| SCALE: | AS NOTED |
| DWG. NO.: | R-4 |
| SHEET | OF |

V:\Clients\Parsons-1979\197909V1-Visalia WCP Pipelines\DWG\SHEET\197909V1-GN-STATIONING LAYOUT last saved by MIKEPR on 12/30/10 plotted 12/22/2010 10:04:42 AM

V:\Clients\Parsons-1979\197909V1-Visalia WCP Pipelines\DWG\SHEET\197909V1-GN-STATIONING LAYOUT.dwg Jan 05, 2011 - 3:43pm

Know what's **below.**
**Call** before you dig.

STA 441+50 (100'LT)
INSTALL (2)-45° ELL

25.26'

(P) EASEMENT

N00°28'11"E

INSTALL ±85LF 60"
S=0.00085

30'

±70'

DIRT ROAD

BASIN 4 DITCH

STA 441+50
CONSTRUCT CONC.
OUTFALL STRUCTURE

DIRT ROAD

1
R-82

1
R-83

(P) EASEMENT
S89°31'49"E

60"
S89°31'49"E

(E) FIELD

25'

100'

DIRT ROAD

MILL CREEK

DIRT ROAD

PROPERTY LINE

S89°31'49"E

(E) UTILITY LINE

(E) FIELD

SEE SHEET R-6

MATCH LINE
STA 449+00

+00 442+00 443+00 444+00 445+00 446+00 447+00 448+00 449

MILL CREEK

# BASIN 4 DITCH

(STATIONING IS ALONG PROPERTY LINE)

SCALE: 1"= 30'
30' 0' 30'

441+00 442+00 443+00 444+00 445+00 446+00 447+00 448+00 449+00

1
R-82

(E) GRADE @
APPROX. ℄
OF PIPELINE

(E) GRADE @
STATIONING LINE

HIGH WATER HGL

4' COVER
MIN.

INSTALL ±750LF 60"
S=0.000881
FLOW

INV 60"=266.00 (N)
@ CONC. OUTFALL STRUCTURE
FLOOR=265.50

INV 60"=266.73 (E,W)

USGS DATUM

277
274
271
268
265
262
259
256
253

SEE SHEET R-6

MATCH LINE
STA 449+00

SCALE:
VERT: 1"=3'
HORIZ: 1"=30'

NOT FOR CONSTRUCTION

| REV. | DATE | BY | DESCRIPTION |
|---|---|---|---|

APPROVED BY:
ENGINEERING SERVICES MANAGER FOR CITY ENGINEER
R.C.E. 047282
DATE:

APPROVED BY:
ENGINEERING SERVICES MANAGER FOR CITY ENGINEER
R.C.E. 047282
DATE:

CITY OF VISALIA
ENGINEERING DEPARTMENT
ENGINEERING DIVISION
336 NORTH BEN MADDOX WAY
VISALIA CA. 93292

PARSONS
100 WEST WALNUT STREET
PASADENA, CA 91124
OFFICE: 626.440.2000
FAX: 626.440.2630
WWW.PARSONS.COM

PROJECT NAME: CITY OF VISALIA
WATER CONSERVATION PLANT UPGRADES

SHEET TITLE: RECYCLED WATER PIPELINE
BASIN 4 DITCH
STA 441-449

EST. 1968
PROVOST& PRITCHARD
CONSULTING GROUP
An Employee Owned Company
130 NORTH GARDEN STREET
VISALIA, CALIFORNIA 93291-6362
559/636-1166 FAX 559/636-1177
www.ppeng.com

COPYRIGHT 2010 by PROVOST & PRITCHARD ENGINEERING GROUP, INC. ALL RIGHTS RESERVED
The firm of Provost & Pritchard Engineering Group, Inc. expressly reserves its common law copyright and other applicable property rights in these plans. These plans are not to be reproduced, changed, or copied in any form or manner whatsoever, nor are they to be assigned to a third party without first obtaining the written permission and consent of Provost & Pritchard Engineering Group, Inc. In the event of unauthorized reuse of these plans by a third party, the third party shall hold the firm of Provost & Pritchard Engineering Group, Inc. harmless, and shall bear the cost of Provost & Pritchard Engineering Group, Inc.'s legal fees associated with defending and enforcing these rights.

| | |
|---|---|
| ISSUE DATE: | 12-6-2010 |
| CHECKED BY: | |
| DESIGNED BY: | |
| DRAWN BY: | P&P |
| SCALE: | AS NOTED |
| DWG. NO.: | R-5 |
| SHEET | OF |

Saved by MICHAELB on 1/4/11 plotted 4/5/2010 10:16:45 AM
V:\Clients\Parsons-1979\197909V1-Visalia WCP Pipelines\DWG\SHEET\PP-BASIN 4\197909V1-PP-STA 441-449 last soved by MICHAELB on 1/4/11 plotted 4/5/2010 10:16:45 AM
V:\Clients\Parsons-1979\197909V1-Visalia WCP Pipelines\DWG\SHEET\PP-BASIN 4\197909V1-PP-STA 441-449.dwg Jan 05, 2011 - 3:45pm

Know what's **below.** **Call** before you dig.

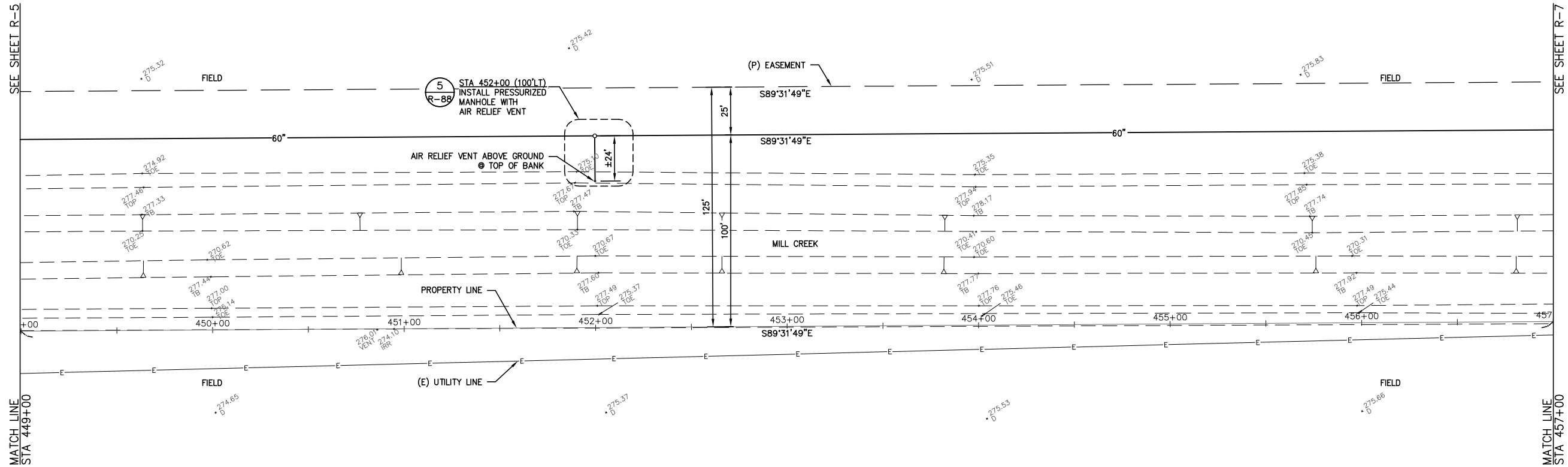


# BASIN 4 DITCH

(STATIONING IS ALONG PROPERTY LINE)

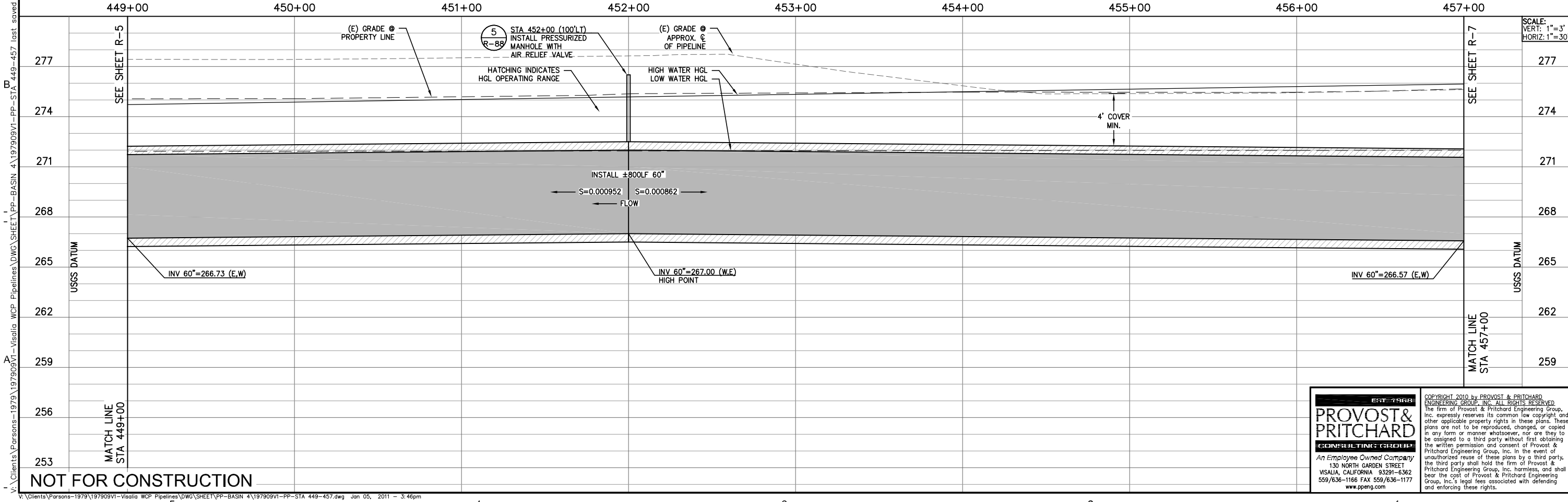


NOT FOR CONSTRUCTION

| REV. | DATE | BY | DESCRIPTION |
|---|---|---|---|
| | | | |

APPROVED BY: _____ R.C.E. 47282
ENGINEERING SERVICES MANAGER FOR CITY ENGINEER
DATE: _____

APPROVED BY: _____ R.C.E. 47282
ENGINEERING SERVICES MANAGER FOR CITY ENGINEER
DATE: _____

CITY OF VISALIA
ENGINEERING DEPARTMENT
336 NORTH BEN MADDOX WAY
VISALIA CA. 93292

PARSONS
100 WEST WALNUT STREET
PASADENA, CA 91124
OFFICE: 626.440.2000
FAX: 626.440.2630
WWW.PARSONS.COM

PROJECT NAME: CITY OF VISALIA
WATER CONSERVATION PLANT UPGRADES

SHEET TITLE: RECYCLED WATER PIPELINE
BASIN 4 DITCH
STA 449-457

EST. 1968
PROVOST & PRITCHARD
CONSULTING GROUP
An Employee Owned Company
130 NORTH GARDEN STREET
VISALIA, CALIFORNIA 93291-6362
559/636-1166 FAX 559/636-1177
www.ppeng.com

COPYRIGHT 2010 by PROVOST & PRITCHARD ENGINEERING GROUP, INC. ALL RIGHTS RESERVED
The firm of Provost & Pritchard Engineering Group, Inc. expressly reserves its common law copyright and other applicable property rights in these plans. These plans are not to be reproduced, changed, or copied in any form or manner whatsoever, nor are they to be assigned to a third party without first obtaining the written permission and consent of Provost & Pritchard Engineering Group, Inc. In the event of unauthorized reuse of these plans by a third party, the third party shall hold the firm of Provost & Pritchard Engineering Group, Inc. harmless, and shall bear the cost of Provost & Pritchard Engineering Group, Inc.'s legal fees associated with defending and enforcing these rights.

| | |
|---|---|
| ISSUE DATE: | 12-6-2010 |
| CHECKED BY: | |
| DESIGNED BY: | |
| DRAWN BY: | P&P |
| SCALE: | AS NOTED |
| DWG. NO.: | R-6 |
| SHEET | OF |

Saved by MICHAELB on 1/4/11 plotted 4/5/2010 11:53:15 AM
V:\Clients\Parsons-1979\197909V1-Visalia WCP Pipelines\DWG\SHEET\PP-BASIN 4\197909V1-PP-STA 449-457 last saved by MICHAELB on 1/4/11 plotted 4/5/2010 11:53:15 AM
V:\Clients\Parsons-1979\197909V1-Visalia WCP Pipelines\DWG\SHEET\PP-BASIN 4\197909V1-PP-STA 449-457.dwg Jan 05, 2011 - 3:46pm

Know what's **below.** **Call** before you dig.

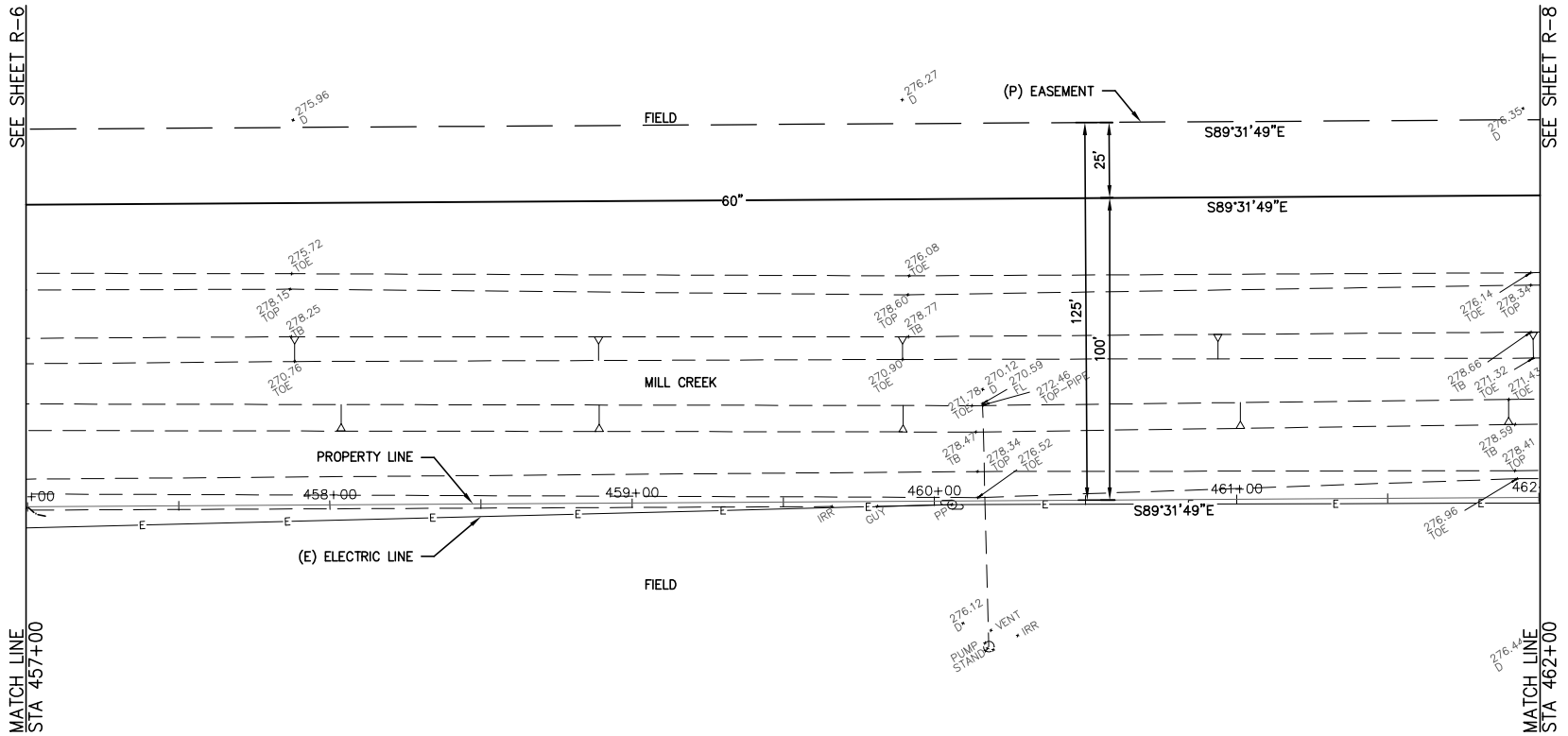


# BASIN 4 DITCH

(STATIONING IS ALONG PROPERTY LINE)

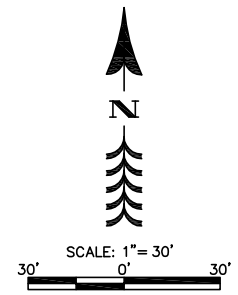


457+00 458+00 459+00 460+00 461+00 462+00

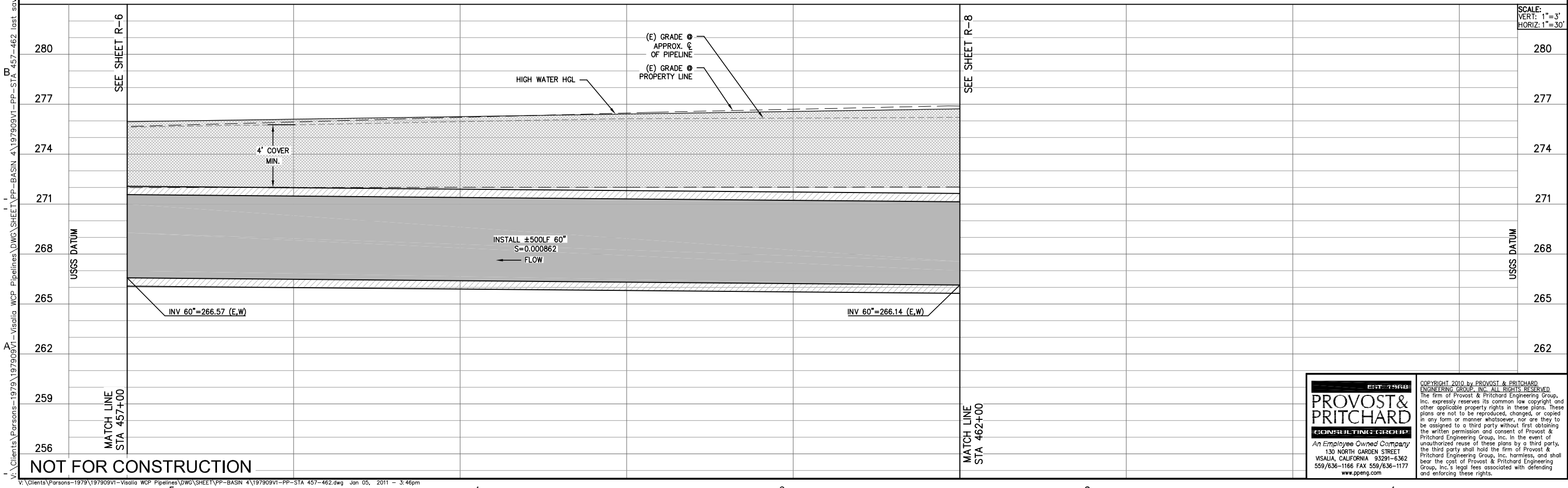


NOT FOR CONSTRUCTION

SCALE:
VERT: 1"=3'
HORIZ: 1"=30'

| REV. | DATE | BY | DESCRIPTION |
|---|---|---|---|

APPROVED BY: R.C.E. 047282
ENGINEERING SERVICES MANAGER FOR CITY ENGINEER
DATE:

APPROVED BY: R.C.E. 047282
ENGINEERING SERVICES MANAGER FOR CITY ENGINEER
DATE:

CITY OF VISALIA
ENGINEERING DEPARTMENT
336 NORTH BEN MADDOX WAY
VISALIA CA. 93292


PARSONS
100 WEST WALNUT STREET
PASADENA, CA 91124
OFFICE: 626.440.2000
FAX: 626.440.2630
WWW.PARSONS.COM


PROJECT NAME: CITY OF VISALIA
WATER CONSERVATION PLANT UPGRADES

SHEET TITLE: RECYCLED WATER PIPELINE
BASIN 4 DITCH
STA 457-462


EST. 1968
PROVOST & PRITCHARD
CONSULTING GROUP
An Employee Owned Company
130 NORTH GARDEN STREET
VISALIA, CALIFORNIA 93291-6362
559/636-1166 FAX 559/636-1177
www.ppeng.com



COPYRIGHT 2010 by PROVOST & PRITCHARD ENGINEERING GROUP, INC. ALL RIGHTS RESERVED.
The firm of Provost & Pritchard Engineering Group, Inc. expressly reserves its common law copyright and other applicable property rights in these plans. These plans are not to be reproduced, changed, or copied in any form or manner whatsoever, nor are they to be assigned to a third party without first obtaining the written permission and consent of Provost & Pritchard Engineering Group, Inc. In the event of unauthorized reuse of these plans by a third party, the third party shall hold the firm of Provost & Pritchard Engineering Group, Inc. harmless, and shall bear the cost of Provost & Pritchard Engineering Group, Inc.'s legal fees associated with defending and enforcing these rights.


| | |
|---|---|
| ISSUE DATE: | 12-6-2010 |
| CHECKED BY: | |
| DESIGNED BY: | |
| DRAWN BY: | P&P |
| SCALE: | AS NOTED |
| DWG. NO.: | R-7 |
| SHEET | OF |


Plotted by MICHAELB on 1/4/11 plotted 4/5/2010 12:11:47 PM
V:\Clients\Parsons-1979\197909V1-Visalia WCP Pipelines\DWG\SHEET\PP-BASIN 4\197909V1-PP-STA 457-462 last saved by MICHAELB on 1/4/11 plotted 4/5/2010 12:11:47 PM
V:\Clients\Parsons-1979\197909V1-Visalia WCP Pipelines\DWG\SHEET\PP-BASIN 4\197909V1-PP-STA 457-462.dwg Jan 05, 2011 - 3:46pm

Know what's **below.** **Call** before you dig.

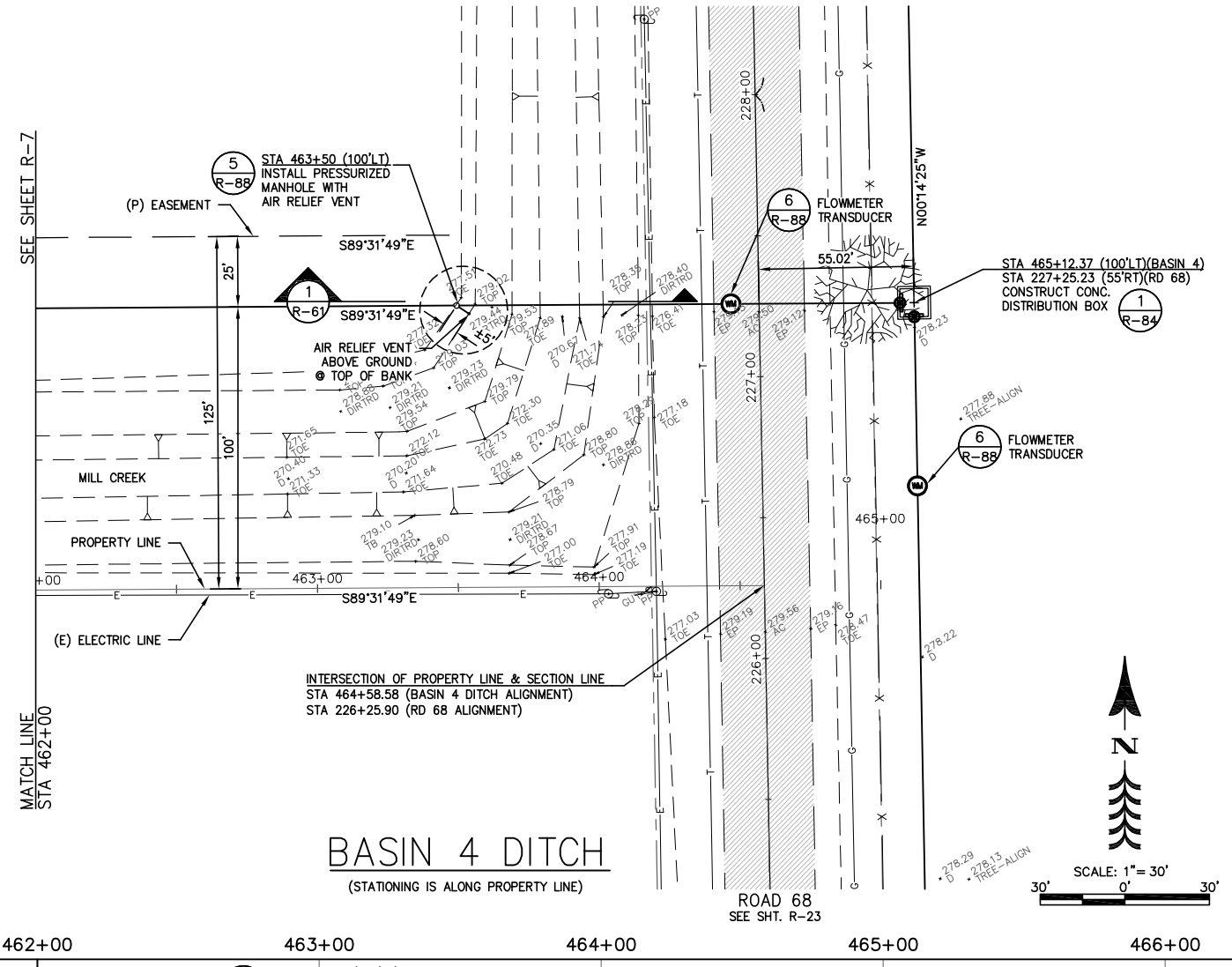


# BASIN 4 DITCH

(STATIONING IS ALONG PROPERTY LINE)

LEGEND

EXISTING AC

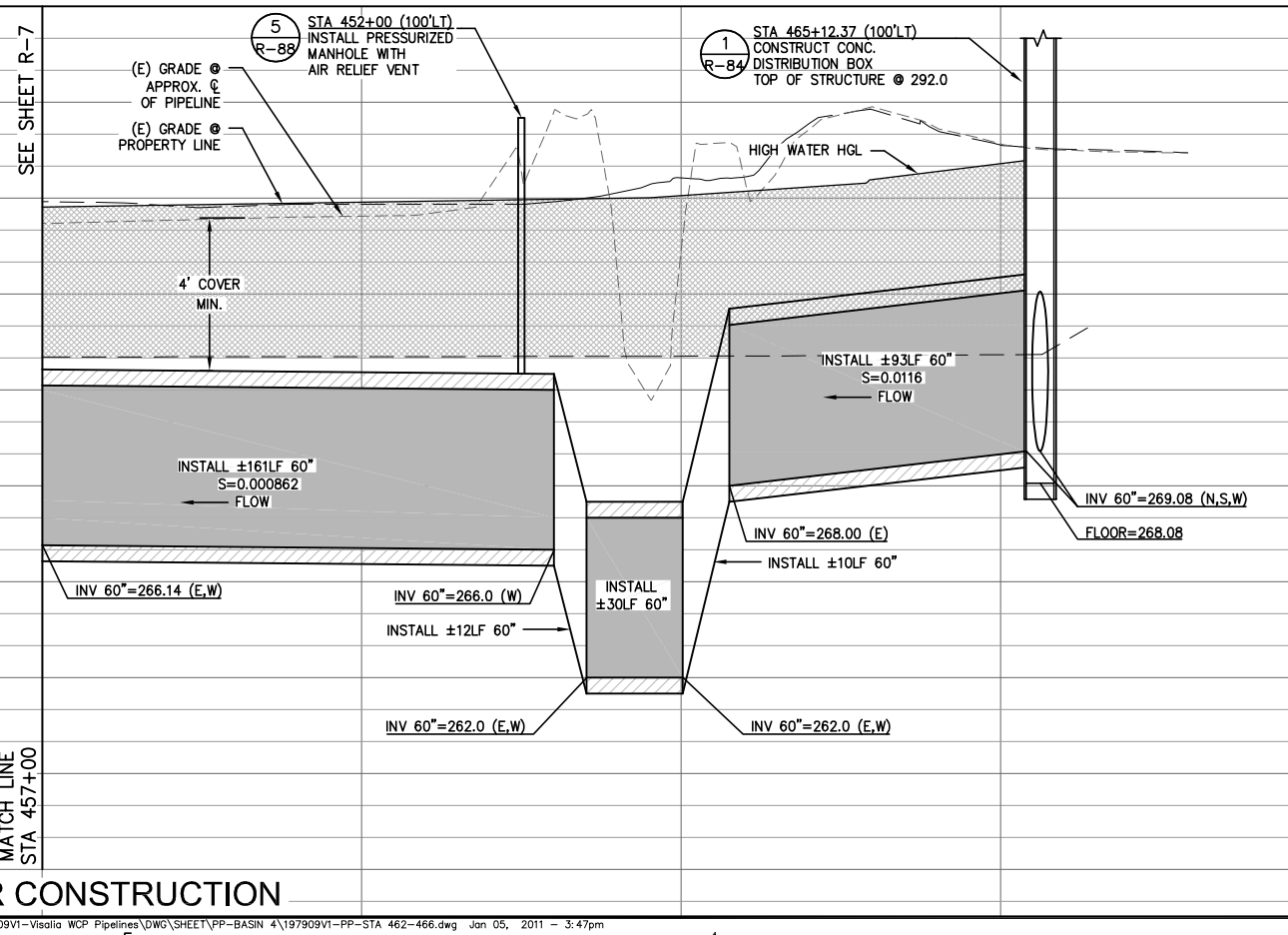


SCALE: VERT: 1"=3' HORIZ: 1"=30'

NOT FOR CONSTRUCTION

| REV. | DATE | BY | DESCRIPTION |
|---|---|---|---|
| | | | |

APPROVED BY: _____ R.C.E. 047282
ENGINEERING SERVICES MANAGER FOR CITY ENGINEER
DATE: _____

APPROVED BY: _____ R.C.E. 047282
ENGINEERING SERVICES MANAGER FOR CITY ENGINEER
DATE: _____

CITY OF VISALIA
ENGINEERING DEPARTMENT
336 NORTH BEN MADDOX WAY
VISALIA CA. 93292


PARSONS
100 WEST WALNUT STREET
PASADENA, CA 91124
OFFICE: 626.440.2000
FAX: 626.440.2630
WWW.PARSONS.COM


PROJECT NAME: CITY OF VISALIA
WATER CONSERVATION PLANT UPGRADES

SHEET TITLE: RECYCLED WATER PIPELINE
BASIN 4 DITCH
STA 462-466


EST. 1988
PROVOST& PRITCHARD
CONSULTING GROUP
An Employee Owned Company
130 NORTH GARDEN STREET
VISALIA, CALIFORNIA 93291-6362
559/636-1166 FAX 559/636-1177
www.ppeng.com



COPYRIGHT 2010 by PROVOST & PRITCHARD ENGINEERING GROUP, INC. ALL RIGHTS RESERVED
The firm of Provost & Pritchard Engineering Group, Inc. expressly reserves its common law copyright and other applicable property rights in these plans. These plans are not to be reproduced, changed, or copied in any form or manner whatsoever, nor are they to be assigned to a third party without first obtaining the written permission and consent of Provost & Pritchard Engineering Group, Inc. In the event of unauthorized reuse of these plans by a third party, the third party shall hold the firm of Provost & Pritchard Engineering Group, Inc. harmless, and shall bear the cost of Provost & Pritchard Engineering Group, Inc.'s legal fees associated with defending and enforcing these rights.


| | |
|---|---|
| ISSUE DATE: | 12-6-2010 |
| CHECKED BY: | |
| DESIGNED BY: | |
| DRAWN BY: | P&P |
| SCALE: | AS NOTED |
| DWG. NO.: | R-8 |
| SHEET | OF |


Plotted by MICHAELB on 1/4/11 plotted 4/15/2010 2:17:35 PM
V:\Clients\Parsons-1979\197909V1-Visalia WCP Pipelines\DWG\SHEET\PP-BASIN 4\197909V1-PP-STA 462-466 last saved by MICHAELB on 1/4/11
V:\Clients\Parsons-1979\197909V1-Visalia WCP Pipelines\DWG\SHEET\PP-BASIN 4\197909V1-PP-STA 462-466.dwg Jan 05, 2011 - 3:47pm

Know what's **below.** **Call** before you dig.

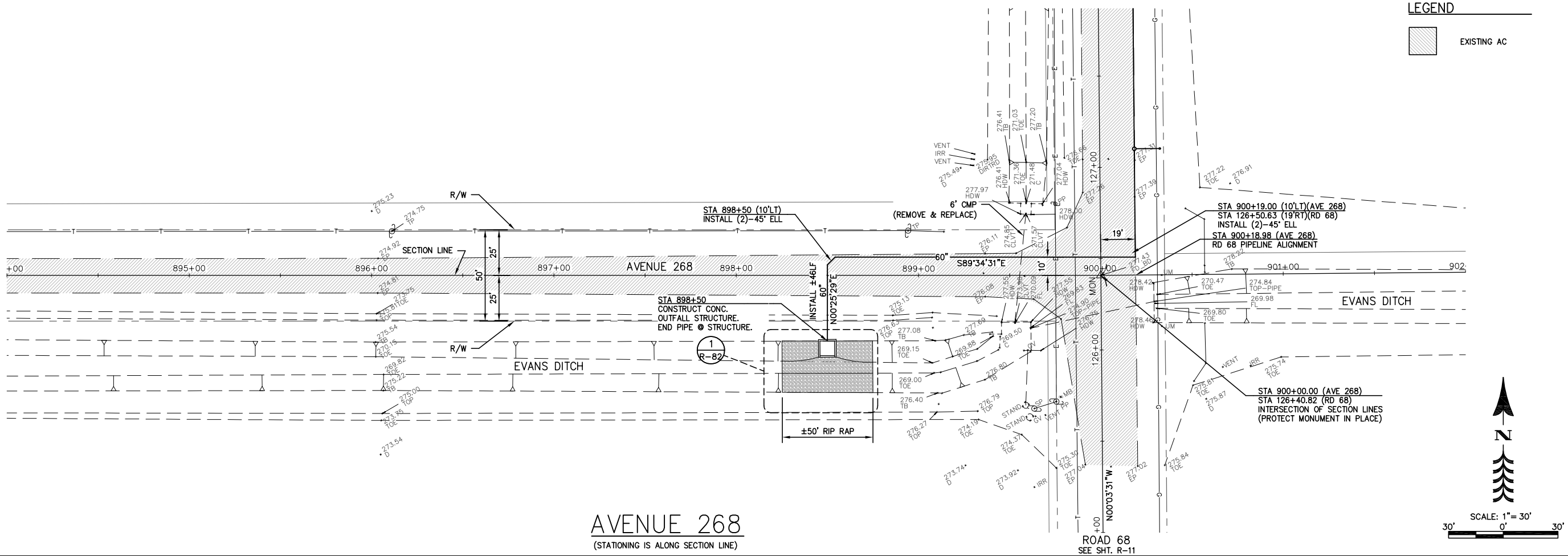


# AVENUE 268

(STATIONING IS ALONG SECTION LINE)

894+00 895+00 896+00 897+00 898+00 899+00 900+00 901+00 902+00

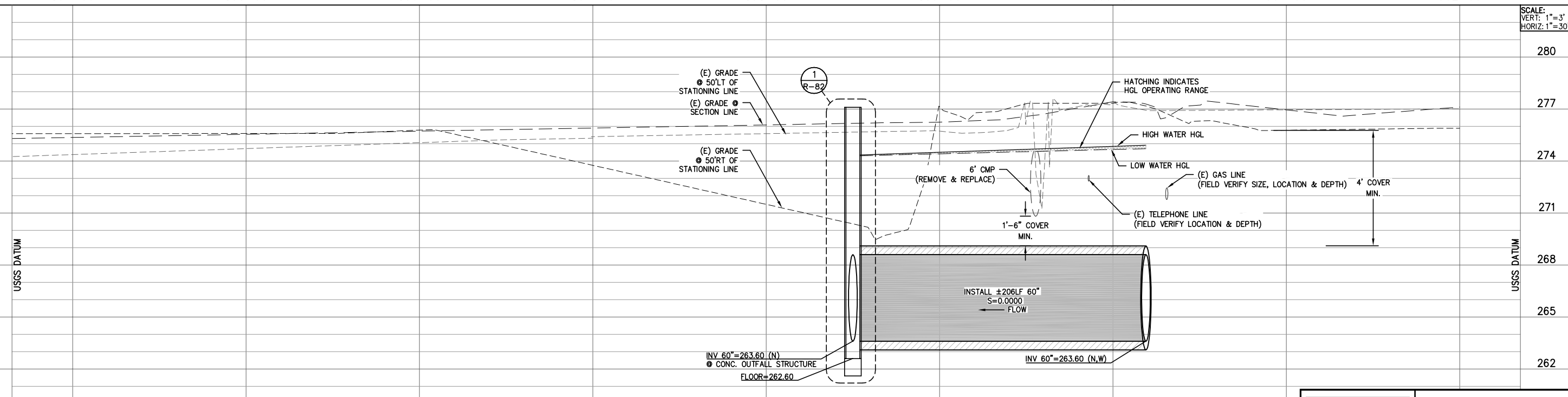


NOT FOR CONSTRUCTION

V:\Clients\Parsons-1979\197909V1-Visalia WCP Pipelines\DWG\SHEET\PP-AVE268\197909V1-PP-STA 894-902.dwg Jan 05, 2011 - 3:48pm

d by MICHAELB on 1/4/11 plotted 4/14/2010 12:53:54 PM

| REV. | DATE | BY | DESCRIPTION |
|---|---|---|---|
| | | | |

APPROVED BY: _____ R.C.E. 047982
ENGINEERING SERVICES MANAGER FOR CITY ENGINEER
DATE: _____

APPROVED BY: _____ R.C.E. 047982
ENGINEERING SERVICES MANAGER FOR CITY ENGINEER
DATE: _____

CITY OF VISALIA
PUBLIC WORKS DEPARTMENT
ENGINEERING DIVISION
336 NORTH BEN MADDOX WAY
VISALIA CA. 93292

PARSONS
100 WEST WALNUT STREET
PASADENA, CA 91124
OFFICE: 626.440.2000
FAX: 626.440.2630
WWW.PARSONS.COM

PROJECT NAME: CITY OF VISALIA
WATER CONSERVATION PLANT UPGRADES

SHEET TITLE: RECYCLED WATER PIPELINE
AVE 268
STA 894-902

EST. 1968
PROVOST & PRITCHARD
CONSULTING GROUP
*An Employee Owned Company*
130 NORTH GARDEN STREET
VISALIA, CALIFORNIA 93291-6362
559/636-1166 FAX 559/636-1177
www.ppeng.com

COPYRIGHT 2010 by PROVOST & PRITCHARD ENGINEERING GROUP, INC. ALL RIGHTS RESERVED
The firm of Provost & Pritchard Engineering Group, Inc. expressly reserves its common law copyright and other applicable property rights in these plans. These plans are not to be reproduced, changed, or copied in any form or manner whatsoever, nor are they to be assigned to a third party without first obtaining the written permission and consent of Provost & Pritchard Engineering Group, Inc. In the event of unauthorized reuse of these plans by a third party, the third party shall hold the firm of Provost & Pritchard Engineering Group, Inc. harmless, and shall bear the cost of Provost & Pritchard Engineering Group, Inc.'s legal fees associated with defending and enforcing these rights.

| | |
|---|---|
| ISSUE DATE: | 12-6-2010 |
| CHECKED BY: | |
| DESIGNED BY: | |
| DRAWN BY: | P&P |
| SCALE: | AS NOTED |
| DWG. NO.: | R-9 |
| SHEET | OF |

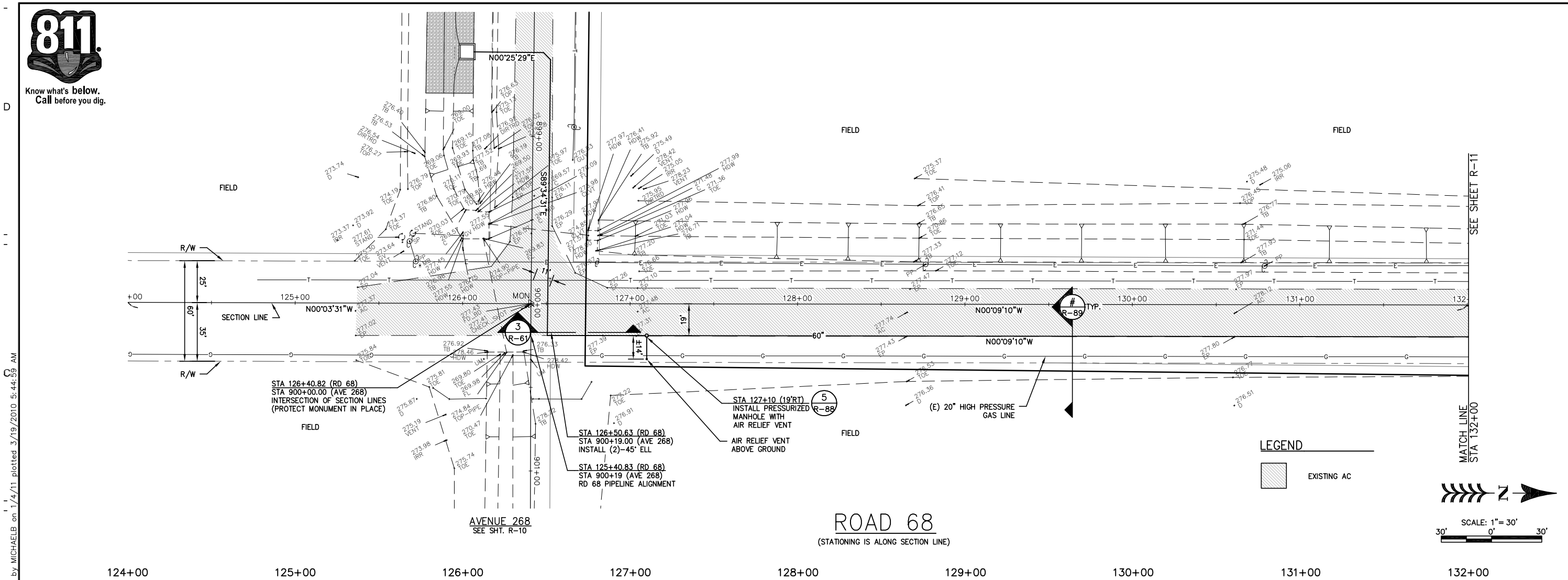


NOT FOR CONSTRUCTION

APPROVED BY: R.C.E. C47282
ENGINEERING SERVICES MANAGER FOR CITY ENGINEER
DATE:

APPROVED BY: R.C.E. C47282
ENGINEERING SERVICES MANAGER FOR CITY ENGINEER
DATE:

CITY OF VISALIA
PUBLIC WORKS DEPARTMENT
336 NORTH BEN MADDOX WAY
VISALIA CA. 93292

PARSONS
100 WEST WALNUT STREET
PASADENA, CA 91124
OFFICE: 626.440.2000
FAX: 626.440.6337
WWW.PARSONS.COM

PROJECT NAME: CITY OF VISALIA
WATER CONSERVATION PLANT UPGRADES

SHEET TITLE: RECYCLED WATER PIPELINE
ROAD 68
STA 124-132

EST. 1968
PROVOST & PRITCHARD
CONSULTING GROUP
An Employee Owned Company
130 NORTH GARDEN STREET
VISALIA, CALIFORNIA 93291-6362
559/636-1166 FAX 559/636-1177
www.ppeng.com

COPYRIGHT 2010 by PROVOST & PRITCHARD ENGINEERING GROUP, INC. ALL RIGHTS RESERVED
The firm of Provost & Pritchard Engineering Group, Inc. expressly reserves its common law copyright and other applicable property rights in these plans. These plans are not to be reproduced, changed, or copied in any form or manner whatsoever, nor are they to be assigned to a third party without first obtaining the written permission and consent of Provost & Pritchard Engineering Group, Inc. In the event of unauthorized reuse of these plans by a third party, the third party shall hold the firm of Provost & Pritchard Engineering Group, Inc. harmless, and shall bear the cost of Provost & Pritchard Engineering Group, Inc.'s legal fees associated with defending and enforcing these rights.

| | |
|---|---|
| ISSUE DATE: | 12-6-2010 |
| CHECKED BY: | |
| DESIGNED BY: | |
| DRAWN BY: | P&P |
| SCALE: | AS NOTED |
| DWG. NO.: | R-10 |
| SHEET | OF |

V:\Clients\Parsons-1979\197909V1-Visalia WCP Pipelines\DWG\SHEET\PP-RD68\197909V1-PP-STA 124-132.dwg Jan 05, 2011 - 3:49pm

Know what's **below.** **Call** before you dig.

SEE SHEET R-10

MATCH LINE STA 132+00

SEE SHEET R-12

MATCH LINE STA 140+00

FIELD

R/W

25'

60'

35'

19'

SECTION LINE

60"

N00°09'10"W

±14'

5 / R-88 STA 134+50 (19'RT) INSTALL PRESSURIZED MANHOLE WITH AIR RELIEF VENT

AIR RELIEF VENT ABOVE GROUND

(E) 20" HIGH PRESSURE GAS LINE

LEGEND

EXISTING AC

SCALE: 1"= 30'

# ROAD 68

(STATIONING IS ALONG SECTION LINE)

132+00 133+00 134+00 135+00 136+00 137+00 138+00 139+00 140+00

SCALE: VERT: 1"=3' HORIZ: 1"=30'

280 277 274 271 268 265 262 259 256

USGS DATUM

5 / R-88 STA 134+50 (19'RT) INSTALL PRESSURIZED MANHOLE WITH AIR RELIEF VENT

(E) GRADE ⊕ SECTION LINE

4' COVER MIN.

HATCHING INDICATES HGL OPERATING RANGE

HIGH WATER HGL

LOW WATER HGL

(E) GAS LINE (FIELD VERIFY DEPTH)

INSTALL ±800LF 60" S=0.0008 FLOW

INV 60"=268.52 (N,S)

INV 60"=269.16 (N,S)

NOT FOR CONSTRUCTION

V:\Clients\Parsons-1979\197909V1-Visalia WCP Pipelines\DWG\SHEET\PP-RD68\197909V1-PP-STA 132-140.dwg Jan 05, 2011 - 3:50pm

Last saved by MICHAELB on 1/4/11 plotted 3/19/2010 6:05:14 AM

| REV. | DATE | BY | DESCRIPTION |
|---|---|---|---|

APPROVED BY: R.C.E. 047982
ENGINEERING SERVICES MANAGER FOR CITY ENGINEER
DATE:

APPROVED BY: R.C.E. 047982
ENGINEERING SERVICES MANAGER FOR CITY ENGINEER
DATE:

CITY OF VISALIA
ENGINEERING DEPARTMENT
336 NORTH BEN MADDOX WAY
VISALIA CA. 93292

PARSONS
100 WEST WALNUT STREET
PASADENA, CA 91124
OFFICE: 626.440.2000
FAX: 626.440.2630
WWW.PARSONS.COM

PROJECT NAME: CITY OF VISALIA
WATER CONSERVATION PLANT UPGRADES

SHEET TITLE: RECYCLED WATER PIPELINE
ROAD 68
STA 132-140

EST. 1968
PROVOST & PRITCHARD
CONSULTING GROUP
An Employee Owned Company
130 NORTH GARDEN STREET
VISALIA, CALIFORNIA 93291-6362
559/636-1166 FAX 559/636-1177
www.ppeng.com

COPYRIGHT 2010 by PROVOST & PRITCHARD ENGINEERING GROUP, INC. ALL RIGHTS RESERVED.
The firm of Provost & Pritchard Engineering Group, Inc. expressly reserves its common law copyright and other applicable property rights in these plans. These plans are not to be reproduced, changed, or copied in any form or manner whatsoever, nor are they to be assigned to a third party without first obtaining the written permission and consent of Provost & Pritchard Engineering Group, Inc. In the event of unauthorized reuse of these plans by a third party, the third party shall hold the firm of Provost & Pritchard Engineering Group, Inc. harmless, and shall bear the cost of Provost & Pritchard Engineering Group, Inc.'s legal fees associated with defending and enforcing these rights.

| | |
|---|---|
| ISSUE DATE: | 12-6-2010 |
| CHECKED BY: | |
| DESIGNED BY: | |
| DRAWN BY: | P&P |
| SCALE: | AS NOTED |
| DWG. NO.: | R-11 |
| SHEET | OF |

Know what's **below.** **Call** before you dig.

SEE SHEET R-11

MATCH LINE STA 140+00

FIELD

R/W

25'

60'

35'

19'

SECTION LINE

60"

N00°09'10"W

(E) 20" HIGH PRESSURE GAS LINE

5 R-88 STA 147+50 (19'RT) INSTALL PRESSURIZED MANHOLE WITH AIR RELIEF VENT

AIR RELIEF VENT ABOVE GROUND

14'

SEE SHEET R-13.1

MATCH LINE STA 148+00

LEGEND

EXISTING AC

N

SCALE: 1"= 30'

# ROAD 68

(STATIONING IS ALONG SECTION LINE)

140+00 141+00 142+00 143+00 144+00 145+00 146+00 147+00 148+00

(E) GRADE @ SECTION LINE

HATCHING INDICATES HGL OPERATING RANGE

4' COVER MIN.

HIGH WATER HGL

LOW WATER HGL

(E) GAS LINE (FIELD VERIFY DEPTH)

INSTALL ±800LF 60" S=0.0008 FLOW

S=0.0008

INV 60"=269.16 (N,S)

INV 60"=269.76 (N,S)

INV 60"=269.72 (N,S)

USGS DATUM

280 277 274 271 268 265 262 259 256

SCALE: VERT: 1"=3' HORIZ: 1"=30'

NOT FOR CONSTRUCTION

| REV. | DATE | BY | DESCRIPTION |
|---|---|---|---|

APPROVED BY: ENGINEERING SERVICES MANAGER FOR CITY ENGINEER R.C.E. 47282 DATE:

APPROVED BY: ENGINEERING SERVICES MANAGER FOR CITY ENGINEER R.C.E. 47282 DATE:

CITY OF VISALIA
ENGINEERING DEPARTMENT
336 NORTH BEN MADDOX WAY
VISALIA CA. 93292

PARSONS
100 WEST WALNUT STREET
PASADENA, CA 91124
OFFICE: 626.440.2000
FAX: 626.440.2630
WWW.P.PARSONS.COM

PROJECT NAME: CITY OF VISALIA
WATER CONSERVATION PLANT UPGRADES

SHEET TITLE: RECYCLED WATER PIPELINE
ROAD 68
STA 140-148

EST. 1988
PROVOST& PRITCHARD
CONSULTING GROUP
An Employee Owned Company
130 NORTH GARDEN STREET
VISALIA, CALIFORNIA 93291-6362
559/636-1166 FAX 559/636-1177
www.ppeng.com

COPYRIGHT 2010 by PROVOST & PRITCHARD ENGINEERING GROUP, INC. ALL RIGHTS RESERVED.
The firm of Provost & Pritchard Engineering Group, Inc. expressly reserves its common law copyright and other applicable property rights in these plans. These plans are not to be reproduced, changed, or copied in any form or manner whatsoever, nor are they to be assigned to a third party without first obtaining the written permission and consent of Provost & Pritchard Engineering Group, Inc. In the event of unauthorized reuse of these plans by a third party, the third party shall hold the firm of Provost & Pritchard Engineering Group, Inc. harmless, and shall bear the cost of Provost & Pritchard Engineering Group, Inc.'s legal fees associated with defending and enforcing these rights.

| | |
|---|---|
| ISSUE DATE: | 12-6-2010 |
| CHECKED BY: | |
| DESIGNED BY: | |
| DRAWN BY: | P&P |
| SCALE: | AS NOTED |
| DWG. NO.: | R-12 |
| SHEET | OF |

Plotted on 1/4/11 plotted 3/19/2010 6:25:54 AM by MICHAELB on 1/4/11 last saved by MICHAELB
V:\Clients\Parsons-1979\197909V1-Visalia WCP Pipelines\DWG\SHEET\PP-RD68\197909V1-PP-STA 140-148.dwg Jan 05, 2011 - 3:50pm

Know what's **below.** **Call** before you dig.

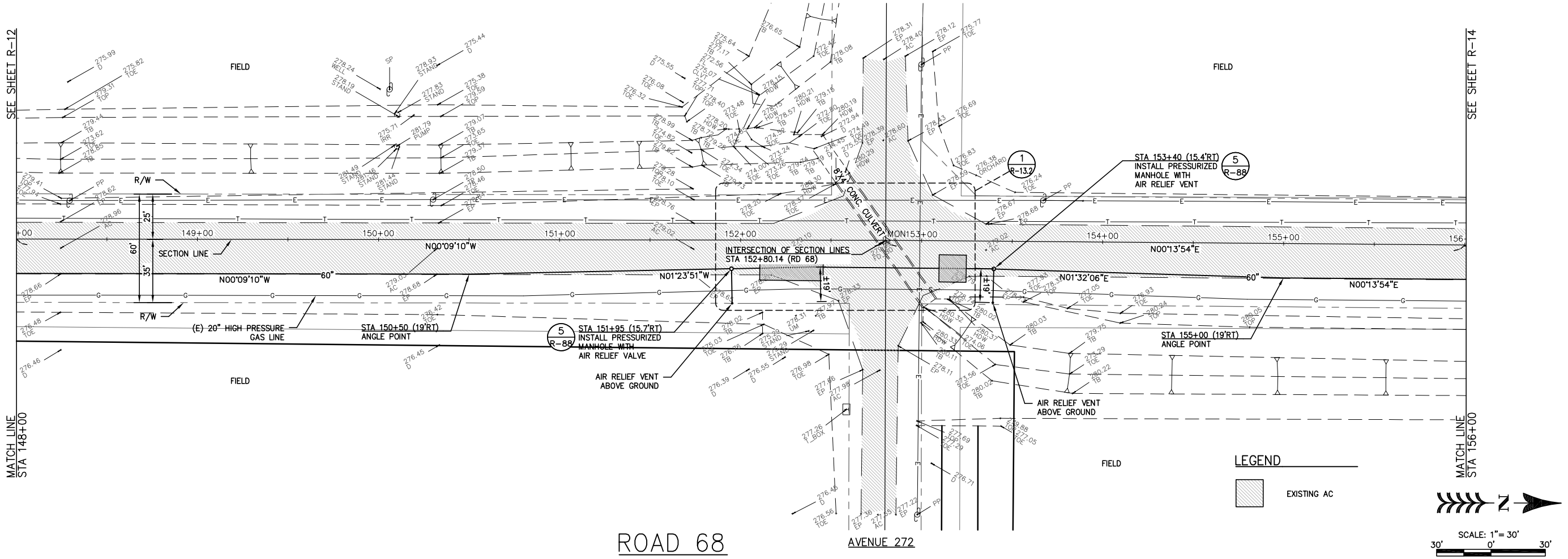


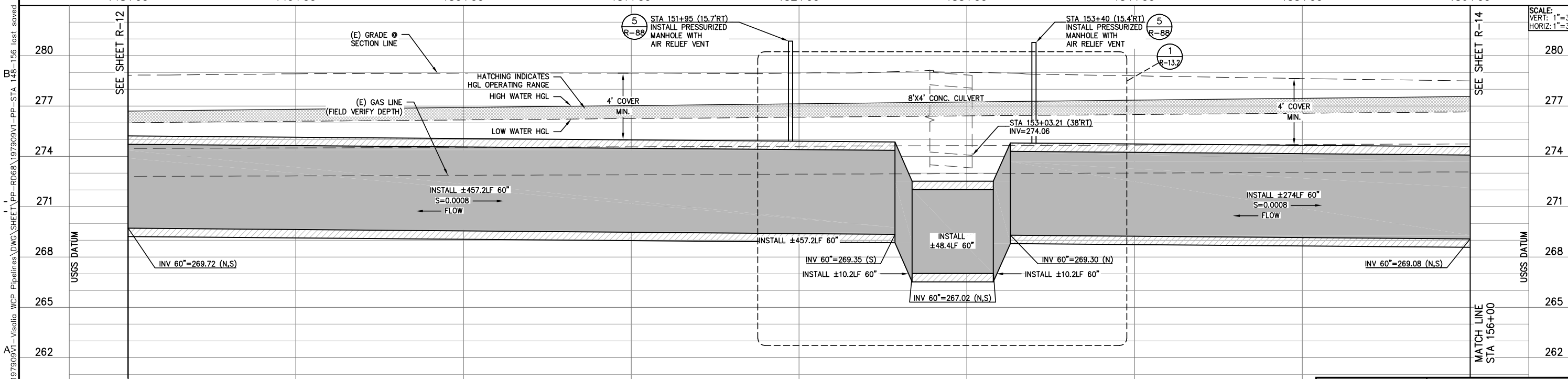


NOT FOR CONSTRUCTION

V:\Clients\Parsons-1979\197909V1-Visalia WCP Pipelines\DWG\SHEET\PP-RD68\197909V1-PP-STA 148-156 last saved by MICHAELB on 1/4/11 plotted 3/19/2010 6:39:31 AM

V:\Clients\Parsons-1979\197909V1-Visalia WCP Pipelines\DWG\SHEET\PP-RD68\197909V1-PP-STA 148-156.dwg Jan 05, 2011 - 3:51pm

| REV. | DATE | BY | DESCRIPTION |
|---|---|---|---|

APPROVED BY: _____ R.C.E. 047982
ENGINEERING SERVICES MANAGER FOR CITY ENGINEER
DATE: _____

APPROVED BY: _____ R.C.E. 047982
ENGINEERING SERVICES MANAGER FOR CITY ENGINEER
DATE: _____

CITY OF VISALIA
ENGINEERING DEPARTMENT
ENGINEERING SERVICES
336 NORTH BEN MADDOX WAY
VISALIA CA. 93292

PARSONS
100 WEST WALNUT STREET
PASADENA, CA 91124
OFFICE: 626.440.2000
FAX: 626.440.2630
WWW.PARSONS.COM

PROJECT NAME: CITY OF VISALIA
WATER CONSERVATION PLANT UPGRADES

SHEET TITLE: RECYCLED WATER PIPELINE
ROAD 68
STA 148-156

EST. 1968
PROVOST & PRITCHARD
CONSULTING GROUP
*An Employee Owned Company*
130 NORTH GARDEN STREET
VISALIA, CALIFORNIA 93291-6362
559/636-1166 FAX 559/636-1177
www.ppeng.com

COPYRIGHT 2010 by PROVOST & PRITCHARD ENGINEERING GROUP, INC. ALL RIGHTS RESERVED
The firm of Provost & Pritchard Engineering Group, Inc. expressly reserves its common law copyright and other applicable property rights in these plans. These plans are not to be reproduced, changed, or copied in any form or manner whatsoever, nor are they to be assigned to a third party without first obtaining the written permission and consent of Provost & Pritchard Engineering Group, Inc. In the event of unauthorized reuse of these plans by a third party, the third party shall hold the firm of Provost & Pritchard Engineering Group, Inc. harmless, and shall bear the cost of Provost & Pritchard Engineering Group, Inc.'s legal fees associated with defending and enforcing these rights.

| | |
|---|---|
| ISSUE DATE: | 12-6-2010 |
| CHECKED BY: | |
| DESIGNED BY: | |
| DRAWN BY: | P&P |
| SCALE: | AS NOTED |
| DWG. NO.: | R-13.1 |
| SHEET | OF |

811
Know what's below.
Call before you dig.

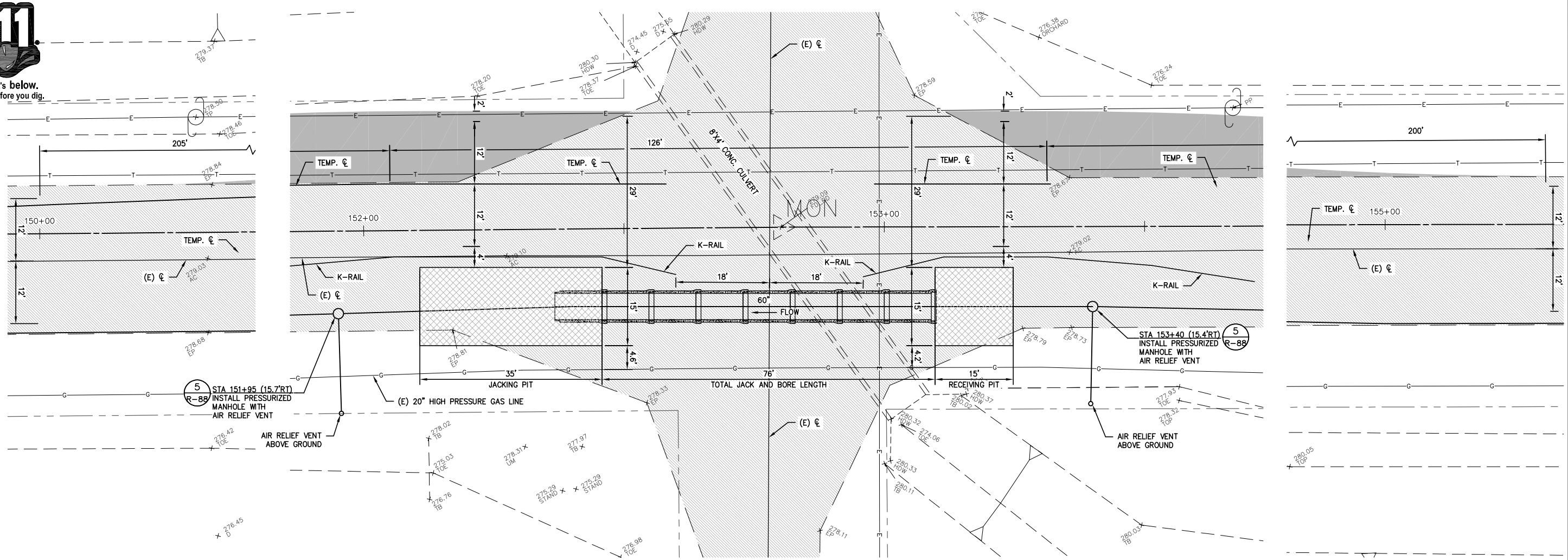


## LEGEND

- EXISTING AC
- PROPOSED AC
- JACKING & RECEIVING PITS

SCALE: 1"= 10'

# ROAD 68

(STATIONING IS ALONG SECTION LINE)

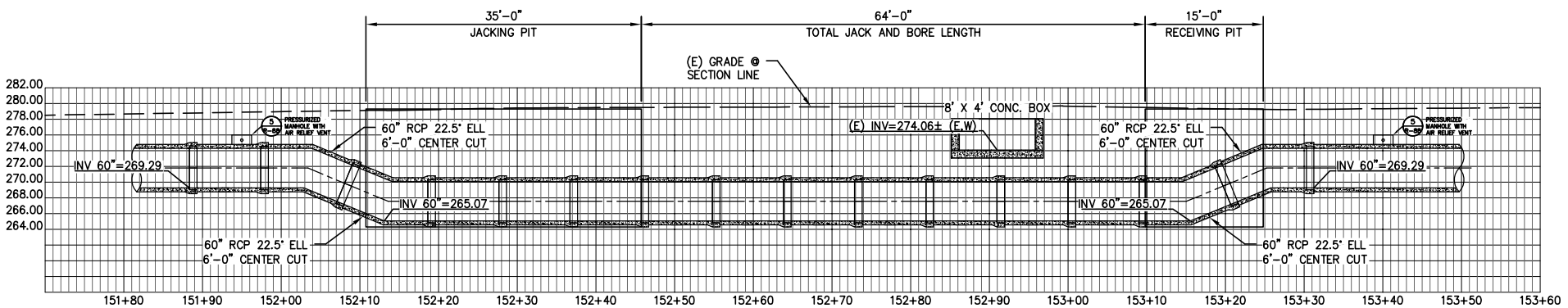


SECTION VIEW

## JACK & BORE NOTES

1. ALL JACK AND BORED PIPE SHALL BE FLUSH BELLED CLASS III RGRCP INTENDED FOR MICROTUNNELING (JACKING), COMPLIANT WITH ASTM C76, AND ABLE TO OPERATE LEAK FREE WITH 25 FT. HEAD. THIS RGRCP WILL BE JACK AND BORED WITHOUT A CARRIER PIPE.

SCALE IN FEET
0 5 10 20

1 R-13.2

NOT FOR CONSTRUCTION

AVENUE 272 JACK & BORE

| REV. | DATE | BY | DESCRIPTION |
|---|---|---|---|
| | | | |

APPROVED BY: _____ R.C.E. 47282
ENGINEERING SERVICES MANAGER FOR CITY ENGINEER
DATE: _____

APPROVED BY: _____ R.C.E. 47282
ENGINEERING SERVICES MANAGER FOR CITY ENGINEER
DATE: _____

CITY OF VISALIA
ENGINEERING DEPARTMENT
ENGINEERING DIVISION
336 NORTH BEN MADDOX WAY
VISALIA CA. 93292

PARSONS
100 WEST WALNUT STREET
PASADENA, CA 91124
OFFICE: 626.440.2000
FAX: 626.440.2630
WWW.PARSONS.COM

PROJECT NAME: CITY OF VISALIA
WATER CONSERVATION PLANT UPGRADES

SHEET TITLE: RECYCLED WATER PIPELINE
ROAD 68
AVE 272 JACK & BORE

EST. 1968
PROVOST & PRITCHARD
CONSULTING GROUP
An Employee Owned Company
130 NORTH GARDEN STREET
VISALIA, CALIFORNIA 93291-6362
559/636-1166 FAX 559/636-1177
www.ppeng.com

COPYRIGHT 2010 by PROVOST & PRITCHARD ENGINEERING GROUP, INC. ALL RIGHTS RESERVED
The firm of Provost & Pritchard Engineering Group, Inc. expressly reserves its common law copyright and other applicable property rights in these plans. These plans are not to be reproduced, changed, or copied in any form or manner whatsoever, nor are they to be assigned to a third party without first obtaining the written permission and consent of Provost & Pritchard Engineering Group, Inc. In the event of unauthorized reuse of these plans by a third party, the third party shall hold the firm of Provost & Pritchard Engineering Group, Inc. harmless, and shall bear the cost of Provost & Pritchard Engineering Group, Inc.'s legal fees associated with defending and enforcing these rights.

| | |
|---|---|
| ISSUE DATE: | 12-6-2010 |
| CHECKED BY: | |
| DESIGNED BY: | |
| DRAWN BY: | P&P |
| SCALE: | AS NOTED |
| DWG. NO.: | R-13.2 |
| SHEET | OF |

Last saved by MIKEPR on 12/30/10 plotted 12/1/2010 10:18:23 AM
V:\Clients\Parsons-1979\197909V1-Visalia WCP Pipelines\DWG\SHEET\PP-RD68\197909V1-PP-STA 148-156-JACK_BORE last saved

Know what's **below.** **Call** before you dig.

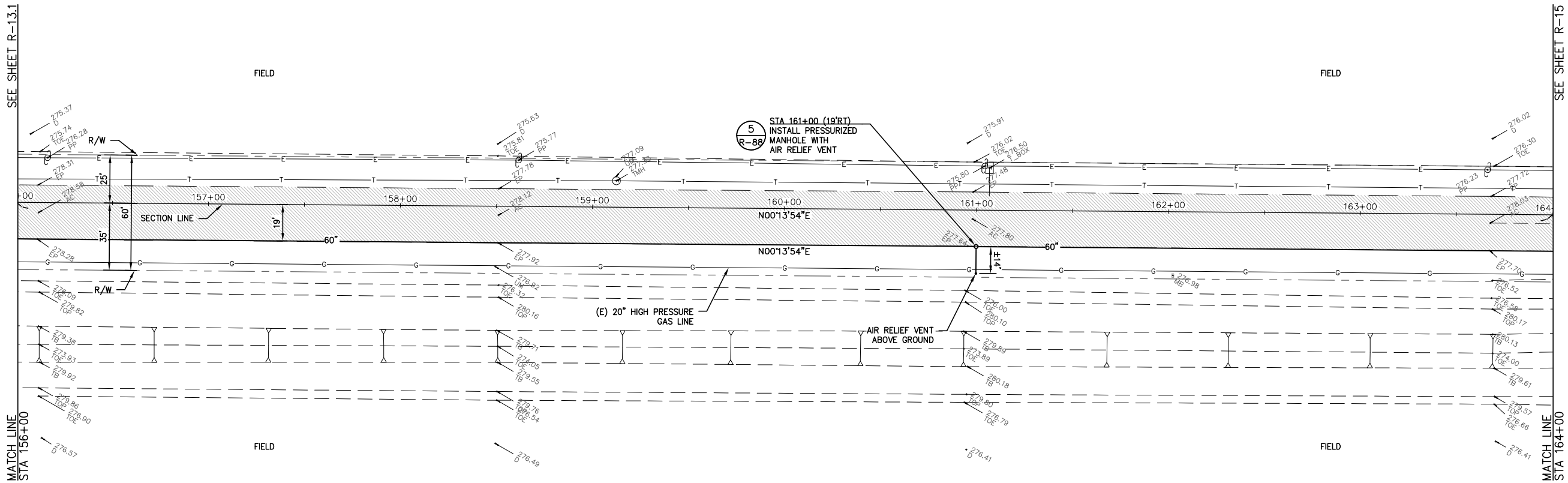


# ROAD 68

(STATIONING IS ALONG SECTION LINE)

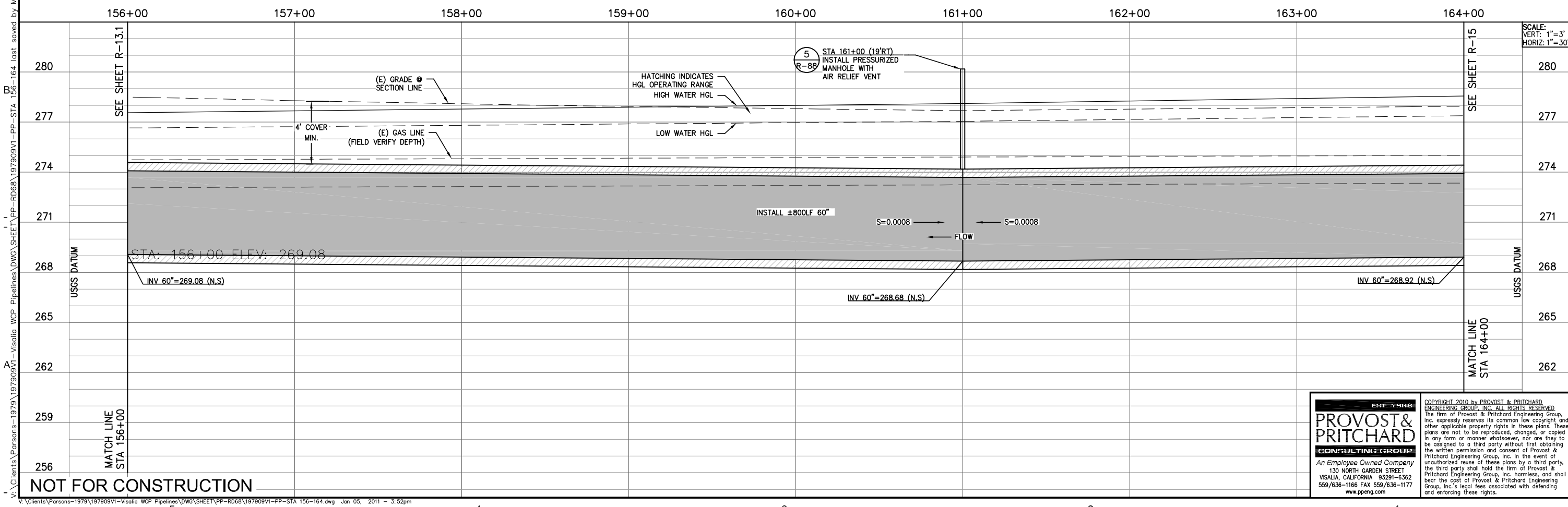


NOT FOR CONSTRUCTION

| REV. | DATE | BY | DESCRIPTION |
|---|---|---|---|
| | | | |

APPROVED BY: _____ R.C.E. 047282
ENGINEERING SERVICES MANAGER FOR CITY ENGINEER
DATE: _____

APPROVED BY: _____ R.C.E. 047282
ENGINEERING SERVICES MANAGER FOR CITY ENGINEER
DATE: _____

CITY OF VISALIA
PUBLIC WORKS DEPARTMENT
336 NORTH BEN MADDOX WAY
VISALIA CA. 93292

PARSONS
100 WEST WALNUT STREET
PASADENA, CA 91124
OFFICE: 626.440.2000
FAX: 626.440.2630
WWW.PARSONS.COM

PROJECT NAME: CITY OF VISALIA
WATER CONSERVATION PLANT UPGRADES

SHEET TITLE: RECYCLED WATER PIPELINE
ROAD 68
STA 156-164

EST. 1968
PROVOST & PRITCHARD
CONSULTING GROUP
*An Employee Owned Company*
130 NORTH GARDEN STREET
VISALIA, CALIFORNIA 93291-6362
559/636-1166 FAX 559/636-1177
www.ppeng.com

COPYRIGHT 2010 by PROVOST & PRITCHARD ENGINEERING GROUP, INC. ALL RIGHTS RESERVED
The firm of Provost & Pritchard Engineering Group, Inc. expressly reserves its common law copyright and other applicable property rights in these plans. These plans are not to be reproduced, changed, or copied in any form or manner whatsoever, nor are they to be assigned to a third party without first obtaining the written permission and consent of Provost & Pritchard Engineering Group, Inc. In the event of unauthorized reuse of these plans by a third party, the third party shall hold the firm of Provost & Pritchard Engineering Group, Inc. harmless, and shall bear the cost of Provost & Pritchard Engineering Group, Inc.'s legal fees associated with defending and enforcing these rights.

| | |
|---|---|
| ISSUE DATE: | 12-6-2010 |
| CHECKED BY: | |
| DESIGNED BY: | |
| DRAWN BY: | P&P |
| SCALE: | AS NOTED |
| DWG. NO.: | R-14 |
| SHEET | OF |

V:\Clients\Parsons-1979\197909V1-Visalia WCP Pipelines\DWG\SHEET\PP-RD68\197909V1-PP-STA 156-164 last saved by MICHAELB on 1/4/11 plotted 3/31/2010 6:39:14 AM

V:\Clients\Parsons-1979\197909V1-Visalia WCP Pipelines\DWG\SHEET\PP-RD68\197909V1-PP-STA 156-164.dwg Jan 05, 2011 - 3:52pm

811
Know what's **below.**
**Call** before you dig.

SEE SHEET R-14

SEE SHEET R-16

FIELD

R/W

25'

60'

35'

SECTION LINE

165+00 166+00 167+00 168+00 169+00 170+00 171+00 172+00

N00°13'53"E

19'

60"

N00°13'54"E

(E) 20" HIGH PRESSURE GAS LINE

MATCH LINE STA 164+00

MATCH LINE STA 172+00

## ROAD 68

(STATIONING IS ALONG SECTION LINE)

LEGEND

EXISTING AC

N

SCALE: 1"= 30'

30' 0' 30'

| REV. | DATE | BY | DESCRIPTION |
|---|---|---|---|

APPROVED BY:
ENGINEERING SERVICES MANAGER FOR CITY ENGINEER
R.C.E. 047282
DATE:

APPROVED BY:
ENGINEERING SERVICES MANAGER FOR CITY ENGINEER
R.C.E. 047282
DATE:

CITY OF VISALIA
ENGINEERING DEPARTMENT
336 NORTH BEN MADDOX WAY
VISALIA CA. 93292

SCALE:
VERT: 1"=3'
HORIZ: 1"=30'

280 277 274 271 268 265 262 259 256

USGS DATUM

HATCHING INDICATES HGL OPERATING RANGE
HIGH WATER HGL
(E) GRADE @ SECTION LINE
(E) GAS LINE (FIELD VERIFY DEPTH)
LOW WATER HGL
4' COVER MIN.

INSTALL ±800LF 60"
S=0.0008
FLOW

INV 60"=268.92 (N.S)

INV 60"=269.56 (N.S)

NOT FOR CONSTRUCTION

PARSONS
100 WEST WALNUT STREET
PASADENA, CA 91124
OFFICE: 626.440.2000
FAX: 626.440.2630
WWW.PARSONS.COM

PROJECT NAME: CITY OF VISALIA
WATER CONSERVATION PLANT UPGRADES

SHEET TITLE: RECYCLED WATER PIPELINE
ROAD 68
STA 164-172

EST. 1968
PROVOST & PRITCHARD
CONSULTING GROUP
*An Employee Owned Company*
130 NORTH GARDEN STREET
VISALIA, CALIFORNIA 93291-6362
559/636-1166 FAX 559/636-1177
www.ppeng.com

COPYRIGHT 2010 by PROVOST & PRITCHARD ENGINEERING GROUP, INC. ALL RIGHTS RESERVED
The firm of Provost & Pritchard Engineering Group, Inc. expressly reserves its common law copyright and other applicable property rights in these plans. These plans are not to be reproduced, changed, or copied in any form or manner whatsoever, nor are they to be assigned to a third party without first obtaining the written permission and consent of Provost & Pritchard Engineering Group, Inc. In the event of unauthorized reuse of these plans by a third party, the third party shall hold the firm of Provost & Pritchard Engineering Group, Inc. harmless, and shall bear the cost of Provost & Pritchard Engineering Group, Inc.'s legal fees associated with defending and enforcing these rights.

| | |
|---|---|
| ISSUE DATE: | 12-6-2010 |
| CHECKED BY: | |
| DESIGNED BY: | |
| DRAWN BY: | P&P |
| SCALE: | AS NOTED |
| DWG. NO.: | R-15 |
| SHEET | OF |

V:\Clients\Parsons-1979\197909V1-Visalia WCP Pipelines\DWG\SHEET\PP-RD68\197909V1-PP-STA 164-172 last saved by MICHAELB on 1/4/11 plotted 3/31/2010 6:39:50 AM

V:\Clients\Parsons-1979\197909V1-Visalia WCP Pipelines\DWG\SHEET\PP-RD68\197909V1-PP-STA 164-172.dwg Jan 05, 2011 - 3:52pm

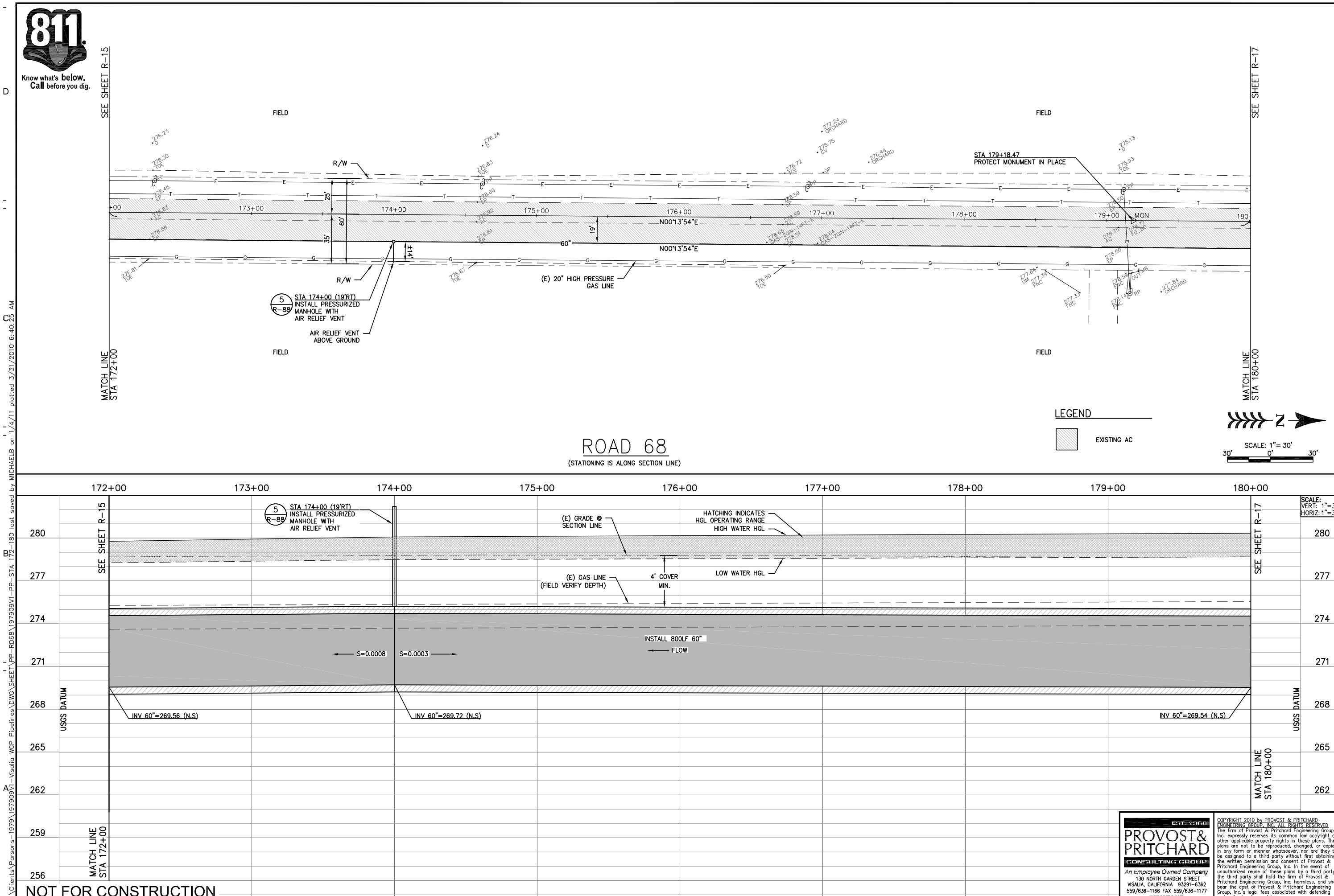


V:\Clients\Parsons-1979\197909V1-Visalia WCP Pipelines\DWG\SHEET\PP-RD68\197909V1-PP-STA 172-180 last saved by MICHAELB on 1/4/11 plotted 3/31/2010 6:40:25 AM

V:\Clients\Parsons-1979\197909V1-Visalia WCP Pipelines\DWG\SHEET\PP-RD68\197909V1-PP-STA 172-180.dwg Jan 05, 2011 - 3:52pm

| REV. | DATE | BY | DESCRIPTION |
|---|---|---|---|

APPROVED BY: R.C.E. C47282
ENGINEERING SERVICES MANAGER FOR CITY ENGINEER
DATE:

APPROVED BY: R.C.E. C47282
ENGINEERING SERVICES MANAGER FOR CITY ENGINEER
DATE:

CITY OF VISALIA
PUBLIC WORKS DEPARTMENT
336 NORTH BEN MADDOX WAY
VISALIA CA. 93292

PARSONS
100 WEST WALNUT STREET
PASADENA, CA 91124
OFFICE: 626.440.2000
FAX: 626.440.6337
WWW.PARSONS.COM

PROJECT NAME: CITY OF VISALIA
WATER CONSERVATION PLANT UPGRADES

SHEET TITLE: RECYCLED WATER PIPELINE
ROAD 68
STA 172-180

EST. 1968
PROVOST & PRITCHARD
CONSULTING GROUP
An Employee Owned Company
130 NORTH GARDEN STREET
VISALIA, CALIFORNIA 93291-6362
559/636-1166 FAX 559/636-1177
www.ppeng.com

COPYRIGHT 2010 by PROVOST & PRITCHARD ENGINEERING GROUP, INC. ALL RIGHTS RESERVED
The firm of Provost & Pritchard Engineering Group, Inc. expressly reserves its common law copyright and other applicable property rights in these plans. These plans are not to be reproduced, changed, or copied in any form or manner whatsoever, nor are they to be assigned to a third party without first obtaining the written permission and consent of Provost & Pritchard Engineering Group, Inc. In the event of unauthorized reuse of these plans by a third party, the third party shall hold the firm of Provost & Pritchard Engineering Group, Inc. harmless, and shall bear the cost of Provost & Pritchard Engineering Group, Inc.'s legal fees associated with defending and enforcing these rights.

| | |
|---|---|
| ISSUE DATE: | 12-6-2010 |
| CHECKED BY: | |
| DESIGNED BY: | |
| DRAWN BY: | P&P |
| SCALE: | AS NOTED |
| DWG. NO.: | R-16 |
| SHEET | OF |

Know what's **below.** **Call** before you dig.

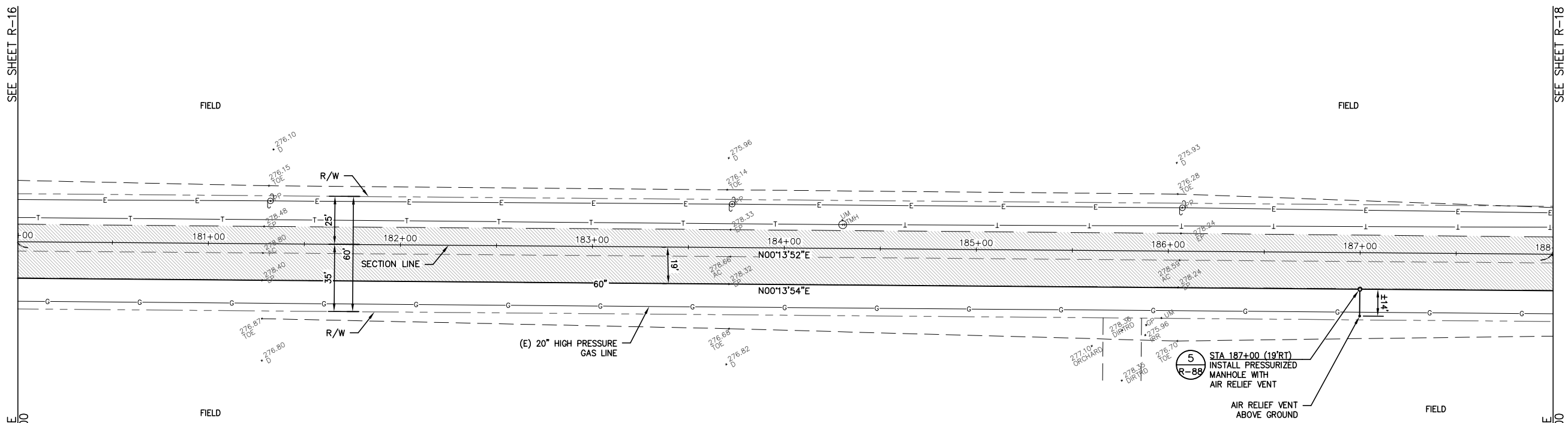


LEGEND

EXISTING AC

N

SCALE: 1"= 30'
30' 0' 30'

# ROAD 68

(STATIONING IS ALONG SECTION LINE)

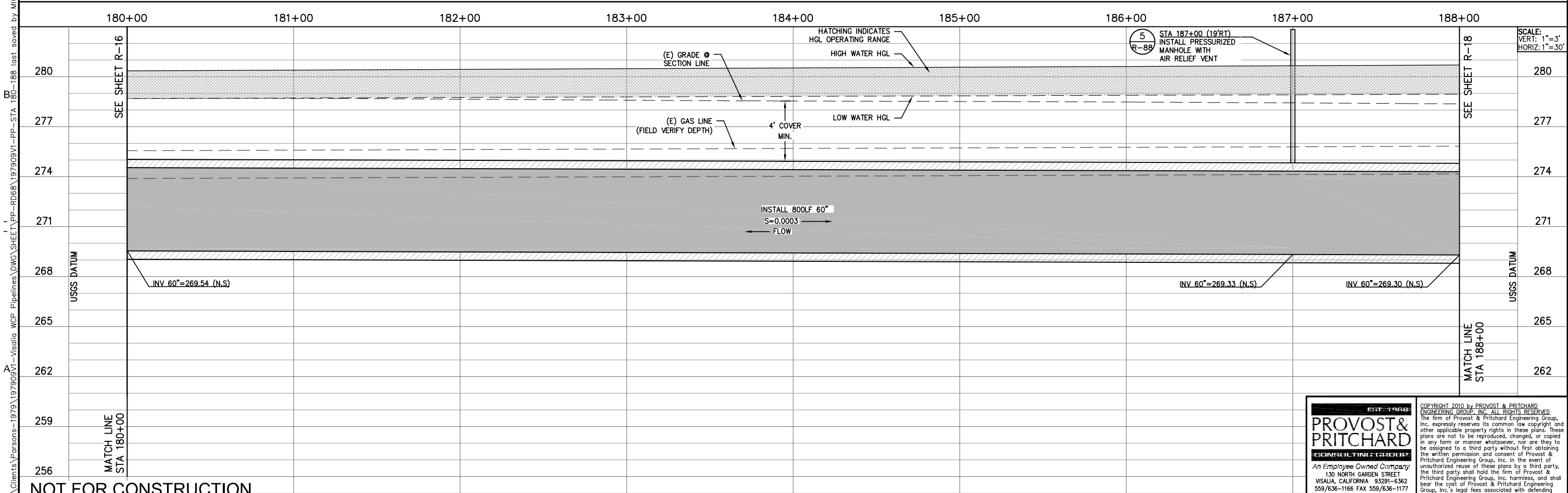


NOT FOR CONSTRUCTION

| REV. | DATE | BY | DESCRIPTION |
|---|---|---|---|
| | | | |

APPROVED BY: _____ R.C.E. 047282
ENGINEERING SERVICES MANAGER FOR CITY ENGINEER
DATE: _____

APPROVED BY: _____ R.C.E. 047282
ENGINEERING SERVICES MANAGER FOR CITY ENGINEER
DATE: _____


CITY OF VISALIA
ENGINEERING DEPARTMENT
336 NORTH BEN MADDOX WAY
VISALIA CA. 93292



PARSONS
100 WEST WALNUT STREET
PASADENA, CA 91124
OFFICE: 626.440.2000
FAX: 626.440.2630
WWW.PARSONS.COM


PROJECT NAME: CITY OF VISALIA
WATER CONSERVATION PLANT UPGRADES

SHEET TITLE: RECYCLED WATER PIPELINE
ROAD 68
STA 180-188


EST. 1968
PROVOST & PRITCHARD
CONSULTING GROUP
An Employee Owned Company
130 NORTH GARDEN STREET
VISALIA, CALIFORNIA 93291-6362
559/636-1166 FAX 559/636-1177
www.ppeng.com



COPYRIGHT 2010 by PROVOST & PRITCHARD ENGINEERING GROUP, INC. ALL RIGHTS RESERVED.
The firm of Provost & Pritchard Engineering Group, Inc. expressly reserves its common law copyright and other applicable property rights in these plans. These plans are not to be reproduced, changed, or copied in any form or manner whatsoever, nor are they to be assigned to a third party without first obtaining the written permission and consent of Provost & Pritchard Engineering Group, Inc. In the event of unauthorized reuse of these plans by a third party, the third party shall hold the firm of Provost & Pritchard Engineering Group, Inc. harmless, and shall bear the cost of Provost & Pritchard Engineering Group, Inc.'s legal fees associated with defending and enforcing these rights.


| | |
|---|---|
| ISSUE DATE: | 12-6-2010 |
| CHECKED BY: | |
| DESIGNED BY: | |
| DRAWN BY: | P&P |
| SCALE: | AS NOTED |
| DWG. NO.: | R-17 |
| SHEET | OF |


V:\Clients\Parsons-1979\197909V1-Visalia WCP Pipelines\DWG\SHEET\PP-RD68\197909V1-PP-STA 180-188.dwg on 1/4/11 plotted 3/30/2010 6:51:09 AM last saved by MICHAELB
V:\Clients\Parsons-1979\197909V1-Visalia WCP Pipelines\DWG\SHEET\PP-RD68\197909V1-PP-STA 180-188.dwg Jan 05, 2011 - 3:53pm

Know what's **below.** **Call** before you dig.

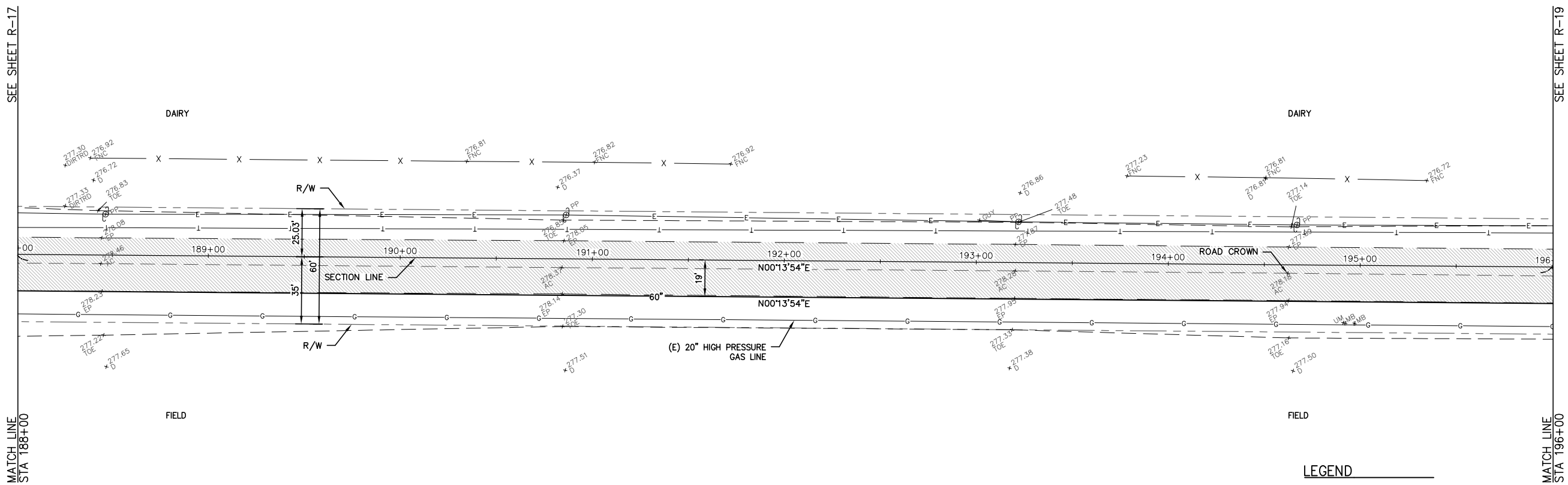


LEGEND

EXISTING AC

N

SCALE: 1"= 30'
30' 0' 30'

# ROAD 68

(STATIONING IS ALONG SECTION LINE)

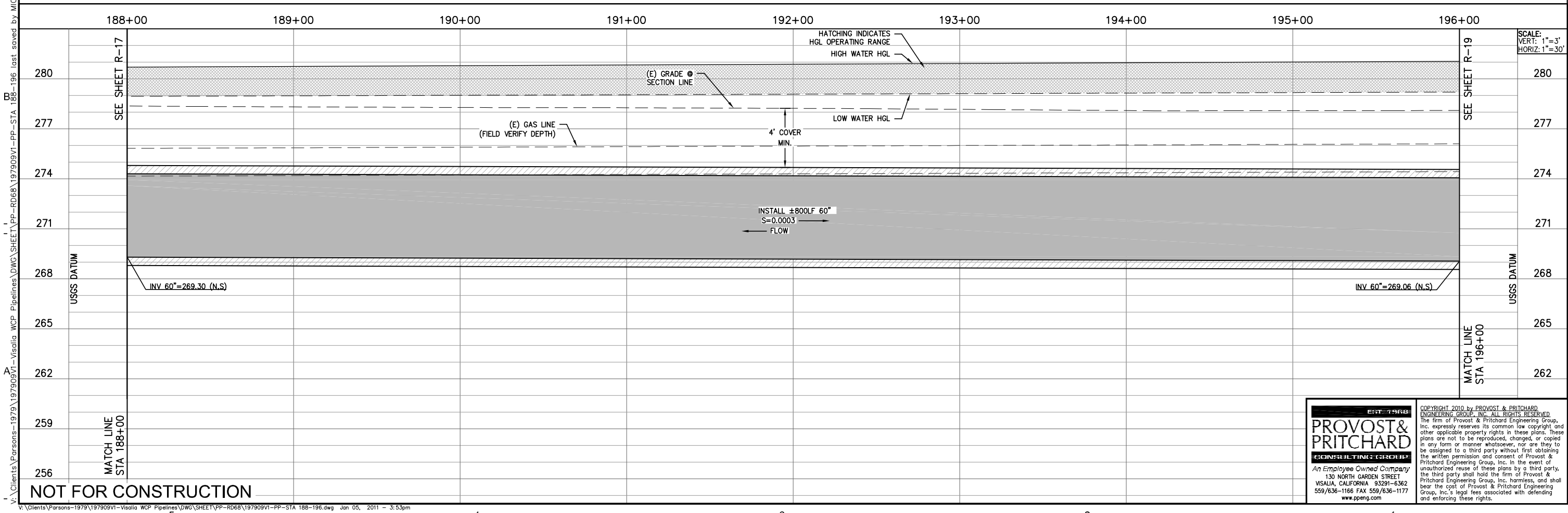


SCALE:
VERT: 1"=3'
HORIZ: 1"=30'

NOT FOR CONSTRUCTION

| REV. | DATE | BY | DESCRIPTION |
|---|---|---|---|
| | | | |

APPROVED BY: _____ R.C.E. 47282
ENGINEERING SERVICES MANAGER FOR CITY ENGINEER
DATE: _____

APPROVED BY: _____ R.C.E. 47282
ENGINEERING SERVICES MANAGER FOR CITY ENGINEER
DATE: _____

CITY OF VISALIA
ENGINEERING DEPARTMENT
336 NORTH BEN MADDOX WAY
VISALIA CA. 93292


PARSONS
100 WEST WALNUT STREET
PASADENA, CA 91124
OFFICE: 626.440.2000
FAX: 626.440.2630
WWW.PARSONS.COM


PROJECT NAME: CITY OF VISALIA
WATER CONSERVATION PLANT UPGRADES

SHEET TITLE: RECYCLED WATER PIPELINE
ROAD 68
STA 188-196


EST. 1968
PROVOST & PRITCHARD
CONSULTING GROUP
An Employee Owned Company
130 NORTH GARDEN STREET
VISALIA, CALIFORNIA 93291-6362
559/636-1166 FAX 559/636-1177
www.ppeng.com



COPYRIGHT 2010 by PROVOST & PRITCHARD ENGINEERING GROUP, INC. ALL RIGHTS RESERVED.
The firm of Provost & Pritchard Engineering Group, Inc. expressly reserves its common law copyright and other applicable property rights in these plans. These plans are not to be reproduced, changed, or copied in any form or manner whatsoever, nor are they to be assigned to a third party without first obtaining the written permission and consent of Provost & Pritchard Engineering Group, Inc. In the event of unauthorized reuse of these plans by a third party, the third party shall hold the firm of Provost & Pritchard Engineering Group, Inc. harmless, and shall bear the cost of Provost & Pritchard Engineering Group, Inc.'s legal fees associated with defending and enforcing these rights.


| | |
|---|---|
| ISSUE DATE: | 12-6-2010 |
| CHECKED BY: | |
| DESIGNED BY: | |
| DRAWN BY: | P&P |
| SCALE: | AS NOTED |
| DWG. NO.: | R-18 |
| SHEET | OF |


V:\Clients\Parsons-1979\197909V1-Visalia WCP Pipelines\DWG\SHEET\PP-RD68\197909V1-PP-STA 188-196 last saved by MICHAELB on 1/4/11 plotted 3/30/2010 7:08:30 AM
V:\Clients\Parsons-1979\197909V1-Visalia WCP Pipelines\DWG\SHEET\PP-RD68\197909V1-PP-STA 188-196.dwg Jan 05, 2011 - 3:53pm

Know what's **below.** **Call** before you dig.

SEE SHEET R-18

DAIRY

FIELD

FIELD

SEE SHEET R-20

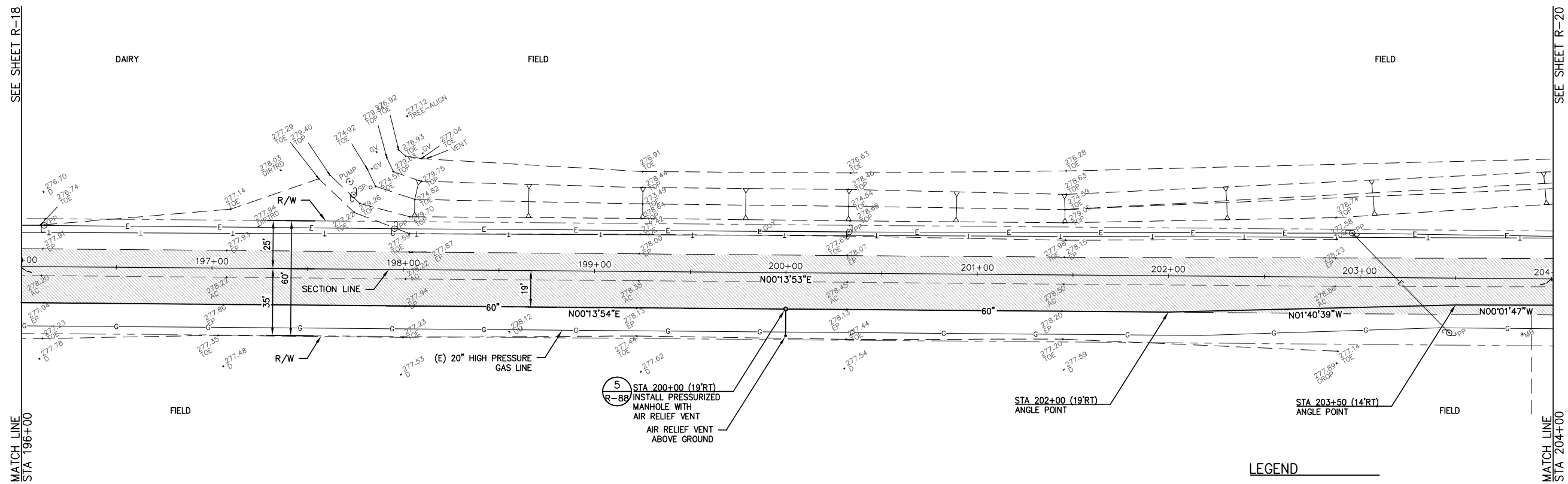


FIELD

FIELD

MATCH LINE
STA 196+00

MATCH LINE
STA 204+00

## LEGEND

EXISTING AC

N

SCALE: 1"= 30'
30' 0' 30'

# ROAD 68

(STATIONING IS ALONG SECTION LINE)

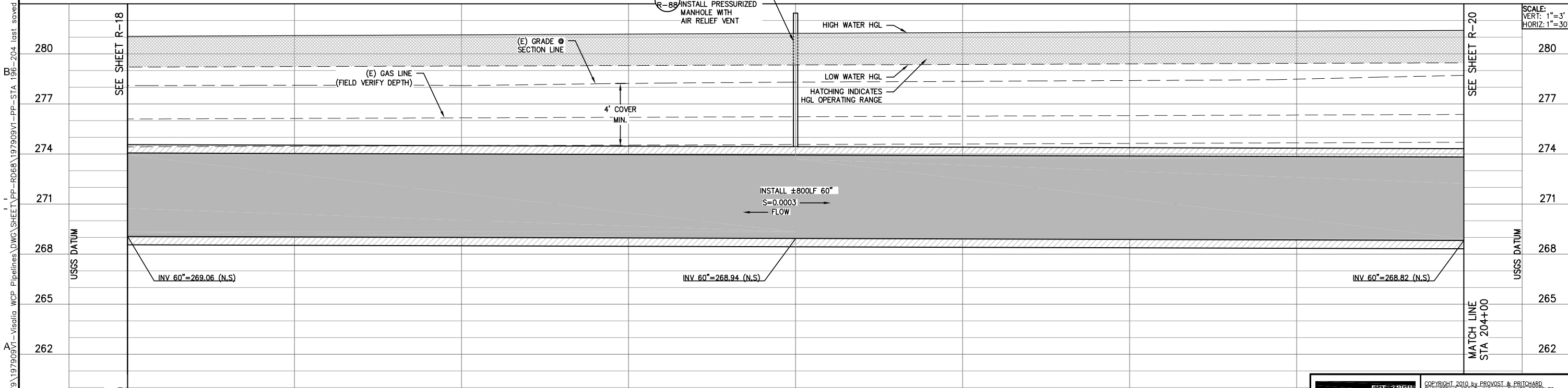


SCALE:
VERT: 1"=3'
HORIZ: 1"=30'

NOT FOR CONSTRUCTION

| REV. | DATE | BY | DESCRIPTION |
|---|---|---|---|
| | | | |

APPROVED BY: _____ R.C.E. 047282
ENGINEERING SERVICES MANAGER FOR CITY ENGINEER
DATE: _____

APPROVED BY: _____ R.C.E. 047282
ENGINEERING SERVICES MANAGER FOR CITY ENGINEER
DATE: _____


CITY OF VISALIA
ENGINEERING DEPARTMENT
336 NORTH BEN MADDOX WAY
VISALIA CA. 93292

PARSONS
100 WEST WALNUT STREET
PASADENA, CA 91124
OFFICE: 626.440.2000
FAX: 626.440.2630
WWW.PARSONS.COM

PROVOST & PRITCHARD CONSULTING GROUP
EST. 1968
An Employee Owned Company
130 NORTH GARDEN STREET
VISALIA, CALIFORNIA 93291-6362
559/636-1166 FAX 559/636-1177
www.ppeng.com



COPYRIGHT 2010 by PROVOST & PRITCHARD ENGINEERING GROUP, INC. ALL RIGHTS RESERVED
The firm of Provost & Pritchard Engineering Group, Inc. expressly reserves its common law copyright and other applicable property rights in these plans. These plans are not to be reproduced, changed, or copied in any form or manner whatsoever, nor are they to be assigned to a third party without first obtaining the written permission and consent of Provost & Pritchard Engineering Group, Inc. In the event of unauthorized reuse of these plans by a third party, the third party shall hold the firm of Provost & Pritchard Engineering Group, Inc. harmless, and shall bear the cost of Provost & Pritchard Engineering Group, Inc.'s legal fees associated with defending and enforcing these rights.


PROJECT NAME: WATER CONSERVATION PLANT UPGRADES

SHEET TITLE: RECYCLED WATER PIPELINE
ROAD 68
STA 196-204

| | |
|---|---|
| ISSUE DATE: | 12-6-2010 |
| CHECKED BY: | |
| DESIGNED BY: | |
| DRAWN BY: | P&P |
| SCALE: | AS NOTED |
| DWG. NO.: | R-19 |
| SHEET | OF |


V:\Clients\Parsons-1979\197909V1-Visalia WCP Pipelines\DWG\SHEET\PP-RD68\197909V1-PP-STA 196-204.dwg Jan 05, 2011 - 3:54pm

V:\Clients\Parsons-1979\197909V1-Visalia WCP Pipelines\DWG\SHEET\PP-RD68\197909V1-PP-STA 196-204 last saved by MICHAELB on 1/4/11 plotted 3/31/2010 7:06:12 AM

Know what's **below.** **Call** before you dig.

SEE SHEET R-19

SEE SHEET R-21

FIELD

FIELD

FIELD

1 R-72

INTERSECTION OF SECTION LINES
STA 126+40.82 (RD 68)
STA 900+00.00 (AVE 268)
(RAISE MONUMENT TO FG AFTER OVERLAY)

R/W

25'

60'

35'

R/W

N00°13'54"E

205+00

206+00

207+00

208+00

209+00

210+00

211+00

212+00

ROAD CROWN

14'

N00°14'28"W

SECTION LINE

80'

40'

40'

R/W

N00°01'47"W

60"

55'

N44°04'07"E

60"

N00°14'25"W

R/W

RESIDENCE

PARKING LOT

(E) 20" HIGH PRESSURE GAS LINE

SCHOOL

ORCHARD

STA 208+74.56 (14'RT)
INSTALL 45° ELL

STA 209+16.32 (55'RT)
INSTALL 45° ELL

MATCH LINE
STA 204+00

MATCH LINE
STA 212+00

AVENUE 280
CALDWELL AVE

# ROAD 68

(STATIONING IS ALONG SECTION LINE)

LEGEND

EXISTING AC

N

SCALE: 1"= 30'
30' 0' 30'

204+00 205+00 206+00 207+00 208+00 209+00 210+00 211+00 212+00

SCALE:
VERT: 1"=3'
HORIZ: 1"=30'

280
277
274
271
268
265
262
259
256

USGS DATUM

(E) GRADE @ 40'LT OF SECTION LINE

(E) GRADE @ 40'RT OF SECTION LINE

(E) GRADE @ SECTION LINE

HIGH WATER HGL

LOW WATER HGL

HATCHING INDICATES HGL OPERATING RANGE

4' COVER MIN.

(E) GRADE @ 55'RT OF SECTION LINE

(E) GAS LINE (FIELD VERIFY DEPTH)

INV 20"=275.69 (E,W)

INV 20"=275.54 (E,W)

INSTALL 800LF 60"
S=0.0003
FLOW

S=0.0005

S=0.0002

INV 60"=268.82 (N,S)

INV 60"=268.68 (N,S)

INV 60"=268.71 (N,S)

INV 60"=268.77 (N,S)

SEE SHEET R-19

SEE SHEET R-21

MATCH LINE
STA 204+00

MATCH LINE
STA 212+00

NOT FOR CONSTRUCTION

| REV. | DATE | BY | DESCRIPTION |
|---|---|---|---|
| | | | |

APPROVED BY: R.C.E. 047282
ENGINEERING SERVICES MANAGER FOR CITY ENGINEER
DATE:

APPROVED BY: R.C.E. 047282
ENGINEERING SERVICES MANAGER FOR CITY ENGINEER
DATE:

CITY OF VISALIA
ENGINEERING DEPARTMENT
336 NORTH BEN MADDOX WAY
VISALIA CA. 93292

PARSONS
100 WEST WALNUT STREET
PASADENA, CA 91124
OFFICE: 626.440.2000
FAX: 626.440.2630
WWW.PARSONS.COM

PROJECT NAME: CITY OF VISALIA
WATER CONSERVATION PLANT UPGRADES

SHEET TITLE: RECYCLED WATER PIPELINE
ROAD 68
STA 204-212

EST. 1968
PROVOST & PRITCHARD
CONSULTING GROUP
*An Employee Owned Company*
130 NORTH GARDEN STREET
VISALIA, CALIFORNIA 93291-6362
559/636-1166 FAX 559/636-1177
www.ppeng.com

COPYRIGHT 2010 by PROVOST & PRITCHARD ENGINEERING GROUP, INC. ALL RIGHTS RESERVED
The firm of Provost & Pritchard Engineering Group, Inc. expressly reserves its common law copyright and other applicable property rights in these plans. These plans are not to be reproduced, changed, or copied in any form or manner whatsoever, nor are they to be assigned to a third party without first obtaining the written permission and consent of Provost & Pritchard Engineering Group, Inc. In the event of unauthorized reuse of these plans by a third party, the third party shall hold the firm of Provost & Pritchard Engineering Group, Inc. harmless, and shall bear the cost of Provost & Pritchard Engineering Group, Inc.'s legal fees associated with defending and enforcing these rights.

| | |
|---|---|
| ISSUE DATE: | 12-6-2010 |
| CHECKED BY: | |
| DESIGNED BY: | |
| DRAWN BY: | P&P |
| SCALE: | AS NOTED |
| DWG. NO.: | R-20 |
| SHEET | OF |

Plotted by MICHAELB on 1/5/11 plotted 3/31/2010 7:20:05 AM
V:\Clients\Parsons-1979\197909V1-Visalia WCP Pipelines\DWG\SHEET\PP-RD68\197909V1-PP-STA 204-212 last saved by MICHAELB on 1/5/11 plotted 3/31/2010 7:20:05 AM
V:\Clients\Parsons-1979\197909V1-Visalia WCP Pipelines\DWG\SHEET\PP-RD68\197909V1-PP-STA 204-212.dwg Jan 05, 2011 - 3:54pm

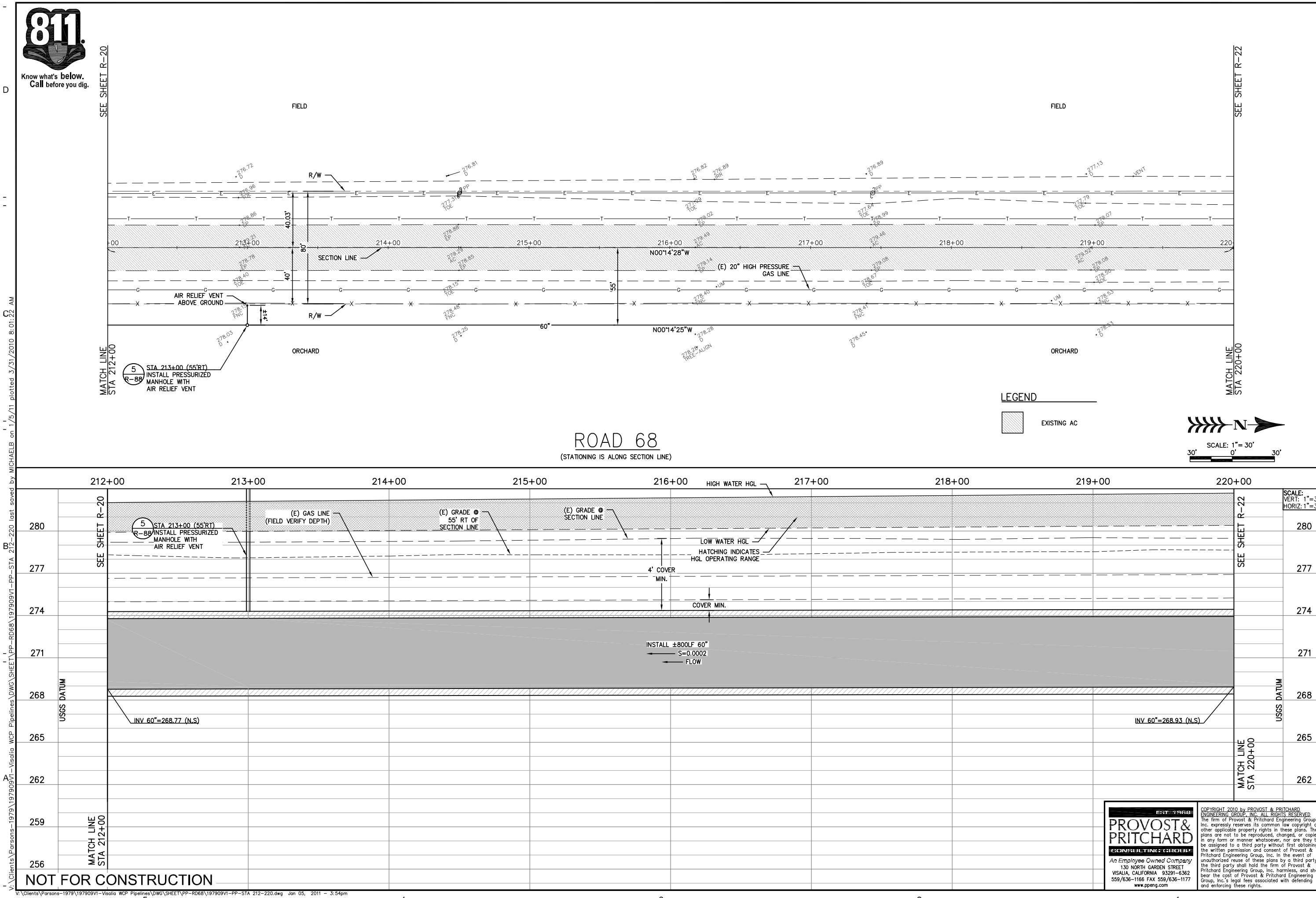


APPROVED BY: ENGINEERING SERVICES MANAGER FOR CITY ENGINEER R.C.E. C47262 DATE:

APPROVED BY: ENGINEERING SERVICES MANAGER FOR CITY ENGINEER R.C.E. C47262 DATE:

CITY OF VISALIA PUBLIC WORKS DEPARTMENT 336 NORTH BEN MADDOX WAY VISALIA CA. 93292

PARSONS
100 WEST WALNUT STREET PASADENA, CA 91124 OFFICE: 626.440.2000 FAX: 626.440.6337 WWW.PARSONS.COM

PROJECT NAME: CITY OF VISALIA WATER CONSERVATION PLANT UPGRADES

SHEET TITLE: RECYCLED WATER PIPELINE ROAD 68 STA 212-220

EST. 1968 PROVOST & PRITCHARD CONSULTING GROUP
An Employee Owned Company
130 NORTH GARDEN STREET VISALIA, CALIFORNIA 93291-6362 559/636-1166 FAX 559/636-1177 www.ppeng.com

COPYRIGHT 2010 by PROVOST & PRITCHARD ENGINEERING GROUP, INC. ALL RIGHTS RESERVED
The firm of Provost & Pritchard Engineering Group, Inc. expressly reserves its common law copyright and other applicable property rights in these plans. These plans are not to be reproduced, changed, or copied in any form or manner whatsoever, nor are they to be assigned to a third party without first obtaining the written permission and consent of Provost & Pritchard Engineering Group, Inc. In the event of unauthorized reuse of these plans by a third party, the third party shall hold the firm of Provost & Pritchard Engineering Group, Inc. harmless, and shall bear the cost of Provost & Pritchard Engineering Group, Inc.'s legal fees associated with defending and enforcing these rights.

| | |
|---|---|
| ISSUE DATE: | 12-6-2010 |
| CHECKED BY: | |
| DESIGNED BY: | |
| DRAWN BY: | P&P |
| SCALE: | AS NOTED |
| DWG. NO.: | R-21 |
| SHEET | OF |

V:\Clients\Parsons-1979\197909V1-Visalia WCP Pipelines\DWG\SHEET\PP-RD68\197909V1-PP-STA 212-220.dwg Jan 05, 2011 - 3:54pm

V:\Clients\Parsons-1979\197909V1-Visalia WCP Pipelines\DWG\SHEET\PP-RD68\197909V1-PP-STA 212-220 last saved by MICHAELB on 1/5/11 plotted 3/31/2010 8:01:22 AM

Know what's **below.**
**Call** before you dig.

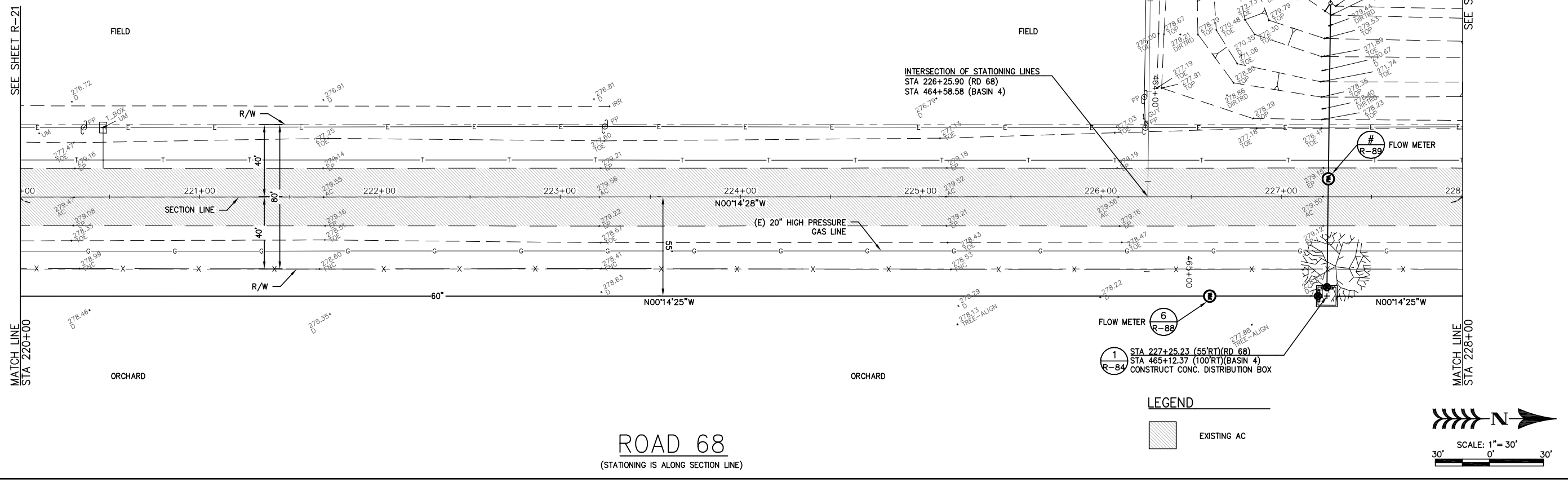


LEGEND

EXISTING AC

N

SCALE: 1"= 30'
30' 0' 30'

# ROAD 68

(STATIONING IS ALONG SECTION LINE)

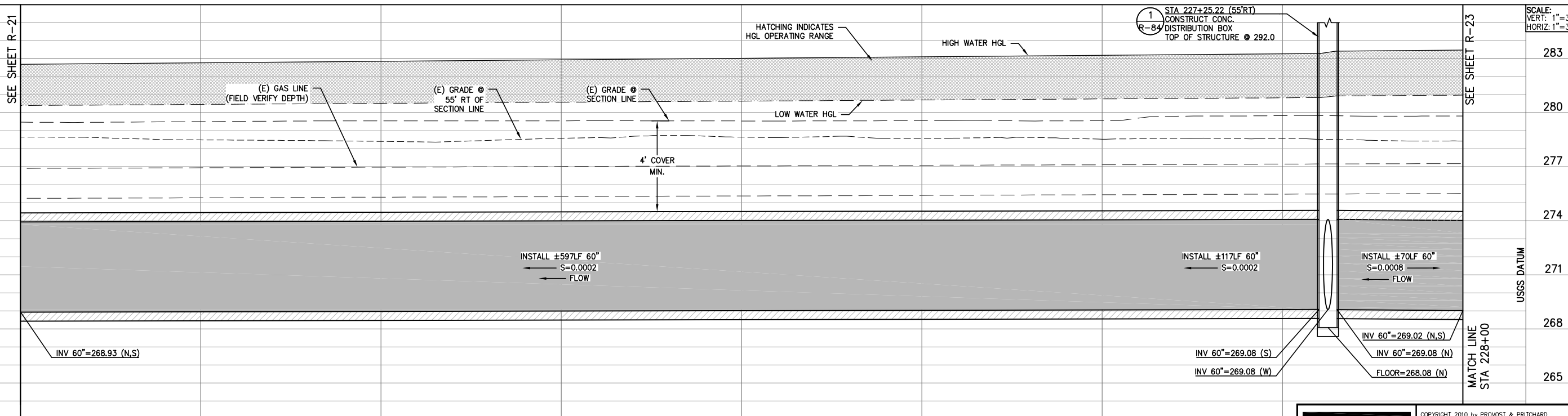


SCALE:
VERT: 1"=3'
HORIZ: 1"=30'

NOT FOR CONSTRUCTION

| REV. | DATE | BY | DESCRIPTION |
|---|---|---|---|
| | | | |

APPROVED BY: _____ R.C.E. 47282
ENGINEERING SERVICES MANAGER FOR CITY ENGINEER
DATE: _____

APPROVED BY: _____ R.C.E. 47282
ENGINEERING SERVICES MANAGER FOR CITY ENGINEER
DATE: _____

CITY OF VISALIA
ENGINEERING DEPARTMENT
336 NORTH BEN MADDOX WAY
VISALIA CA. 93292


PARSONS
100 WEST WALNUT STREET
PASADENA, CA 91124
OFFICE: 626.440.2000
FAX: 626.440.2630
WWW.PARSONS.COM


PROJECT NAME: CITY OF VISALIA
WATER CONSERVATION PLANT UPGRADES

SHEET TITLE: RECYCLED WATER PIPELINE
ROAD 68
STA 220-228


EST. 1968
PROVOST& PRITCHARD
CONSULTING GROUP
An Employee Owned Company
130 NORTH GARDEN STREET
VISALIA, CALIFORNIA 93291-6362
559/636-1166 FAX 559/636-1177
www.ppeng.com



COPYRIGHT 2010 by PROVOST & PRITCHARD ENGINEERING GROUP, INC. ALL RIGHTS RESERVED
The firm of Provost & Pritchard Engineering Group, Inc. expressly reserves its common law copyright and other applicable property rights in these plans. These plans are not to be reproduced, changed, or copied in any form or manner whatsoever, nor are they to be assigned to a third party without first obtaining the written permission and consent of Provost & Pritchard Engineering Group, Inc. In the event of unauthorized reuse of these plans by a third party, the third party shall hold the firm of Provost & Pritchard Engineering Group, Inc. harmless, and shall bear the cost of Provost & Pritchard Engineering Group, Inc.'s legal fees associated with defending and enforcing these rights.


| | |
|---|---|
| ISSUE DATE: | 12-6-2010 |
| CHECKED BY: | |
| DESIGNED BY: | |
| DRAWN BY: | P&P |
| SCALE: | AS NOTED |
| DWG. NO.: | R-22 |
| SHEET | OF |


V:\Clients\Parsons-1979\197909V1-Visalia WCP Pipelines\DWG\SHEET\PP-RD68\197909V1-PP-STA 220-228.dwg Jan 05, 2011 - 3:55pm
V:\Clients\Parsons-1979\197909V1-Visalia WCP Pipelines\DWG\SHEET\PP-RD68\197909V1-PP-STA 220-228 last saved by MICHAELB on 1/5/11 plotted 3/31/2010 9:19:27 AM

Know what's **below.** **Call** before you dig.

SEE SHEET R-22

MATCH LINE STA 228+00

FIELD

ORCHARD

R/W

40'

80'

40'

SECTION LINE

(E) 20" HIGH PRESSURE GAS LINE

55'

60"

R/W

STA 232+17.90
INTERSECTION OF SECTION LINES
(PROECT MONUMENT IN PLACE)

N00°14'28"W

N00°14'25"W

N00°14'12"W

228+00 229+00 230+00 231+00 232+00 233+00 234+00 235+00 236

SEE SHEET R-24

MATCH LINE STA 236+00

FIELD

ORCHARD

LEGEND

EXISTING AC

N

SCALE: 1"= 30'

30' 0' 30'

# ROAD 68

(STATIONING IS ALONG SECTION LINE)

228+00 229+00 230+00 231+00 232+00 233+00 234+00 235+00 236+00

SEE SHEET R-22

SEE SHEET R-24

283 280 277 274 271 268 265 262 259

USGS DATUM

MATCH LINE STA 228+00

MATCH LINE STA 236+00

HATCHING INDICATES HGL OPERATING RANGE

HIGH WATER HGL

LOW WATER HGL

(E) GRADE @ SECTION LINE

(E) GRADE @ 55' RT OF SECTION LINE

(E) GAS LINE (FIELD VERIFY DEPTH)

4' COVER MIN.

INSTALL ±800LF 60" S=0.0008 → FLOW

INV 60"=269.02 (N,S)

INV 60"=268.38 (N,S)

SCALE: VERT: 1"=3' HORIZ: 1"=30'

NOT FOR CONSTRUCTION

| REV. | DATE | BY | DESCRIPTION |
|---|---|---|---|

APPROVED BY: R.C.E. 047282
ENGINEERING SERVICES MANAGER FOR CITY ENGINEER
DATE:

APPROVED BY: R.C.E. 047282
ENGINEERING SERVICES MANAGER FOR CITY ENGINEER
DATE:

CITY OF VISALIA
ENGINEERING DEPARTMENT
336 NORTH BEN MADDOX WAY
VISALIA CA. 93292

PARSONS
100 WEST WALNUT STREET
PASADENA, CA 91124
OFFICE: 626.440.2000
FAX: 626.440.2630
WWW.PARSONS.COM

PROJECT NAME: CITY OF VISALIA
WATER CONSERVATION PLANT UPGRADES

SHEET TITLE: RECYCLED WATER PIPELINE
ROAD 68
STA 228-236

EST. 1968
PROVOST & PRITCHARD
CONSULTING GROUP
*An Employee Owned Company*
130 NORTH GARDEN STREET
VISALIA, CALIFORNIA 93291-6362
559/636-1166 FAX 559/636-1177
www.ppeng.com

COPYRIGHT 2010 by PROVOST & PRITCHARD ENGINEERING GROUP, INC. ALL RIGHTS RESERVED
The firm of Provost & Pritchard Engineering Group, Inc. expressly reserves its common law copyright and other applicable property rights in these plans. These plans are not to be reproduced, changed, or copied in any form or manner whatsoever, nor are they to be assigned to a third party without first obtaining the written permission and consent of Provost & Pritchard Engineering Group, Inc. In the event of unauthorized reuse of these plans by a third party, the third party shall hold the firm of Provost & Pritchard Engineering Group, Inc. harmless, and shall bear the cost of Provost & Pritchard Engineering Group, Inc.'s legal fees associated with defending and enforcing these rights.

| | |
|---|---|
| ISSUE DATE: | 12-6-2010 |
| CHECKED BY: | |
| DESIGNED BY: | |
| DRAWN BY: | P&P |
| SCALE: | AS NOTED |
| DWG. NO.: | R-23 |
| SHEET | OF |

V:\Clients\Parsons-1979\197909V1-Visalia WCP Pipelines\DWG\SHEET\PP-RD68\197909V1-PP-STA 228-236 last saved by MICHAELB on 1/5/11 plotted 3/31/2010 9:26:59 AM
V:\Clients\Parsons-1979\197909V1-Visalia WCP Pipelines\DWG\SHEET\PP-RD68\197909V1-PP-STA 228-236.dwg Jan 05, 2011 - 3:55pm

811 Know what's below. Call before you dig.

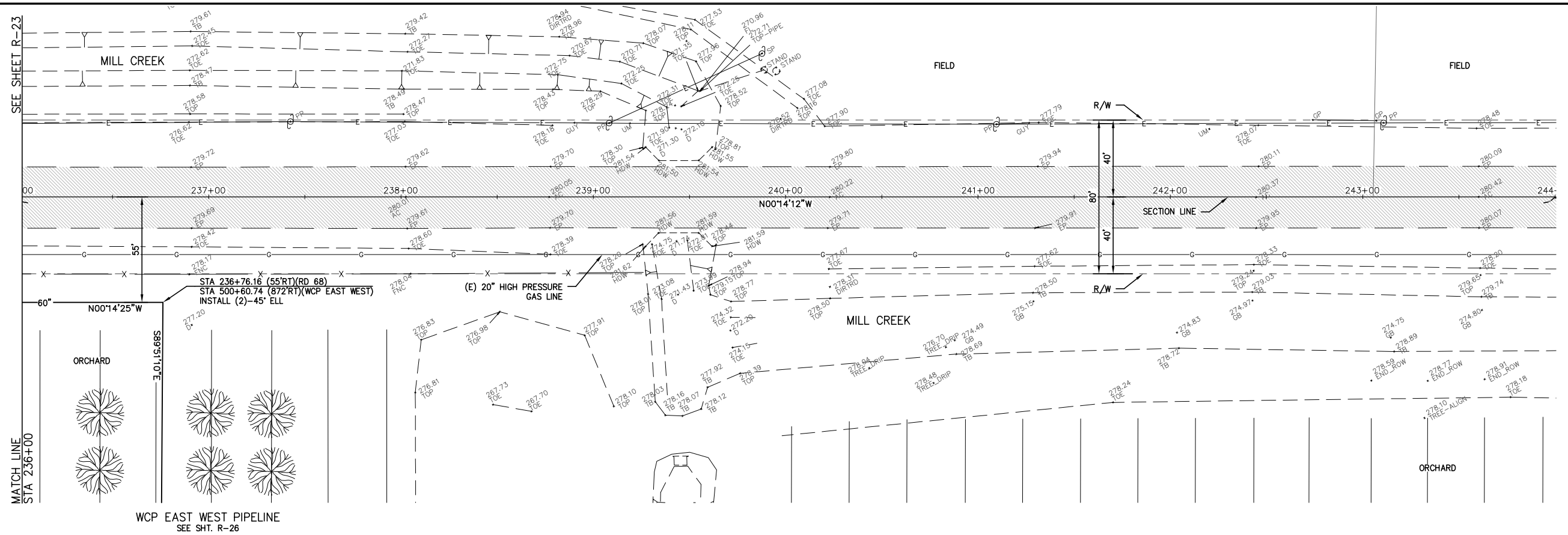


## ROAD 68

(STATIONING IS ALONG SECTION LINE)

LEGEND

EXISTING AC

SCALE: 1"= 30'

30' 0' 30'

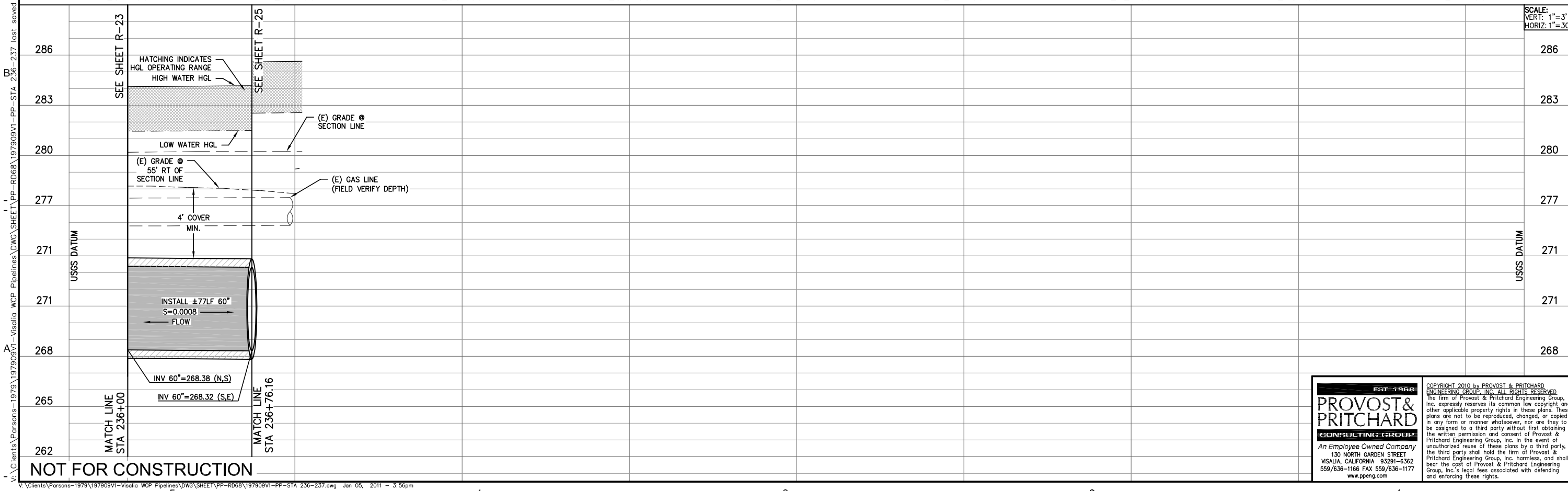


NOT FOR CONSTRUCTION

| REV. | DATE | BY | DESCRIPTION |
|---|---|---|---|

APPROVED BY: R.C.E. 047282
ENGINEERING SERVICES MANAGER FOR CITY ENGINEER
DATE:

APPROVED BY: R.C.E. 047282
ENGINEERING SERVICES MANAGER FOR CITY ENGINEER
DATE:

CITY OF VISALIA
PUBLIC WORKS DEPARTMENT
336 NORTH BEN MADDOX WAY
VISALIA CA. 93292

PARSONS
100 WEST WALNUT STREET
PASADENA, CA 91124
OFFICE: 626.440.2000
FAX: 626.440.4577
WWW.PARSONS.COM

PROJECT NAME: CITY OF VISALIA
WATER CONSERVATION PLANT UPGRADES

SHEET TITLE: RECYCLED WATER PIPELINE
ROAD 68
STA 236-237

PROVOST & PRITCHARD CONSULTING GROUP
EST. 1968
An Employee Owned Company
130 NORTH GARDEN STREET
VISALIA, CALIFORNIA 93291-6362
559/636-1166 FAX 559/636-1177
www.ppeng.com

COPYRIGHT 2010 by PROVOST & PRITCHARD ENGINEERING GROUP, INC. ALL RIGHTS RESERVED
The firm of Provost & Pritchard Engineering Group, Inc. expressly reserves its common law copyright and other applicable property rights in these plans. These plans are not to be reproduced, changed, or copied in any form or manner whatsoever, nor are they to be assigned to a third party without first obtaining the written permission and consent of Provost & Pritchard Engineering Group, Inc. In the event of unauthorized reuse of these plans by a third party, the third party shall hold the firm of Provost & Pritchard Engineering Group, Inc. harmless, and shall bear the cost of Provost & Pritchard Engineering Group, Inc.'s legal fees associated with defending and enforcing these rights.

| | |
|---|---|
| ISSUE DATE: | 12-6-2010 |
| CHECKED BY: | |
| DESIGNED BY: | |
| DRAWN BY: | P&P |
| SCALE: | AS NOTED |
| DWG. NO.: | R-24 |
| SHEET | OF |

V:\Clients\Parsons-1979\197909V1-Visalia WCP Pipelines\DWG\SHEET\PP-RD68\197909V1-PP-STA 236-237 last saved by MICHAELB on 1/5/11 plotted 3/31/2010 9:39:11 AM

V:\Clients\Parsons-1979\197909V1-Visalia WCP Pipelines\DWG\SHEET\PP-RD68\197909V1-PP-STA 236-237.dwg Jan 05, 2011 - 3:56pm

811 Know what's below. Call before you dig.

WCP POND 3

STA 500+00.00 (WCP EAST WEST)
STA 245+48.39 (RD 68)
INTERSECTION OF SECTION LINES

S89°51'10"E

(E) TREE ROWS (TYP)

SEE SHEET R-26

N00°14'12"W

872'

LEGEND

EXISTING AC

TREE ROW #105

STA 500+60.74 (872'RT)(WCP EAST WEST)
STA 236+76.16 (55'RT)(RD 68)
INSTALL (2)-45° ELL

REMOVE (E) TREE ROW #103
FOR PIPELINE ALIGNMENT.

55'

60'

TREE ROW #103

S89°51'10"E

MATCH LINE
STA 507+00

ROAD 68
SEE SHT. R-25

SCALE: 1"= 30'
30' 0' 30'

# WCP EAST WEST PIPELINE

(STATIONING IS ALONG SECTION LINE)

500+00 501+00 502+00 503+00 504+00 505+00 506+00 507+00

SEE SHEET R-24

HATCHING INDICATES
HGL OPERATING RANGE

HIGH WATER HGL

LOW WATER HGL

SEE SHEET R-26

SCALE:
VERT: 1"=3'
HORIZ: 1"=30'

284
281
278
275
272
269
266
263
260

USGS DATUM

(E) GRADE @
APPROX. ℄
OF PIPELINE

4' COVER
MIN.

INSTALL ±745LF 60" RCP
S=0.00007
FLOW

INV 60"=268.32 (S,E)

INV 60"=268.81 (E,W)

MATCH LINE
STA 500+60.74

MATCH LINE
STA 507+00

NOT FOR CONSTRUCTION

| REV. | DATE | BY | DESCRIPTION |
|---|---|---|---|

APPROVED BY:
ENGINEERING SERVICES MANAGER FOR CITY ENGINEER
R.C.E. 047282
DATE:

APPROVED BY:
ENGINEERING SERVICES MANAGER FOR CITY ENGINEER
R.C.E. 047282
DATE:

CITY OF VISALIA
ENGINEERING DEPARTMENT
WATER DIVISION
336 NORTH BEN MADDOX WAY
VISALIA CA. 93292

PARSONS
100 WEST WALNUT STREET
PASADENA, CA 91124
OFFICE: 626.440.2000
FAX: 626.440.2630
WWW.PARSONS.COM

PROJECT NAME: CITY OF VISALIA
WATER CONSERVATION PLANT UPGRADES

SHEET TITLE: RECYCLED WATER PIPELINE
WCP EAST WEST PIPELINE
STA 500-507

EST. 1968
PROVOST & PRITCHARD
CONSULTING GROUP
An Employee Owned Company
130 NORTH GARDEN STREET
VISALIA, CALIFORNIA 93291-6362
559/636-1166 FAX 559/636-1177
www.ppeng.com

COPYRIGHT 2010 by PROVOST & PRITCHARD ENGINEERING GROUP, INC. ALL RIGHTS RESERVED
The firm of Provost & Pritchard Engineering Group, Inc. expressly reserves its common law copyright and other applicable property rights in these plans. These plans are not to be reproduced, changed, or copied in any form or manner whatsoever, nor are they to be assigned to a third party without first obtaining the written permission and consent of Provost & Pritchard Engineering Group, Inc. In the event of unauthorized reuse of these plans by a third party, the third party shall hold the firm of Provost & Pritchard Engineering Group, Inc. harmless, and shall bear the cost of Provost & Pritchard Engineering Group, Inc.'s legal fees associated with defending and enforcing these rights.

| | |
|---|---|
| ISSUE DATE: | 12-6-2010 |
| CHECKED BY: | |
| DESIGNED BY: | |
| DRAWN BY: | P&P |
| SCALE: | AS NOTED |
| DWG. NO.: | R-25 |
| SHEET | OF |

saved by MICHAELB on 1/5/11 plotted 4/2/2010 6:09:39 AM
V:\Clients\Parsons-1979\197909V1-Visalia WCP Pipelines\DWG\SHEET\PP-WTP-E_W\197909V1-PP-STA 500-507 last saved by MICHAELB on 1/5/11 plotted 4/2/2010 6:09:39 AM
V:\Clients\Parsons-1979\197909V1-Visalia WCP Pipelines\DWG\SHEET\PP-WTP-E_W\197909V1-PP-STA 500-507.dwg Jan 05, 2011 - 3:58pm

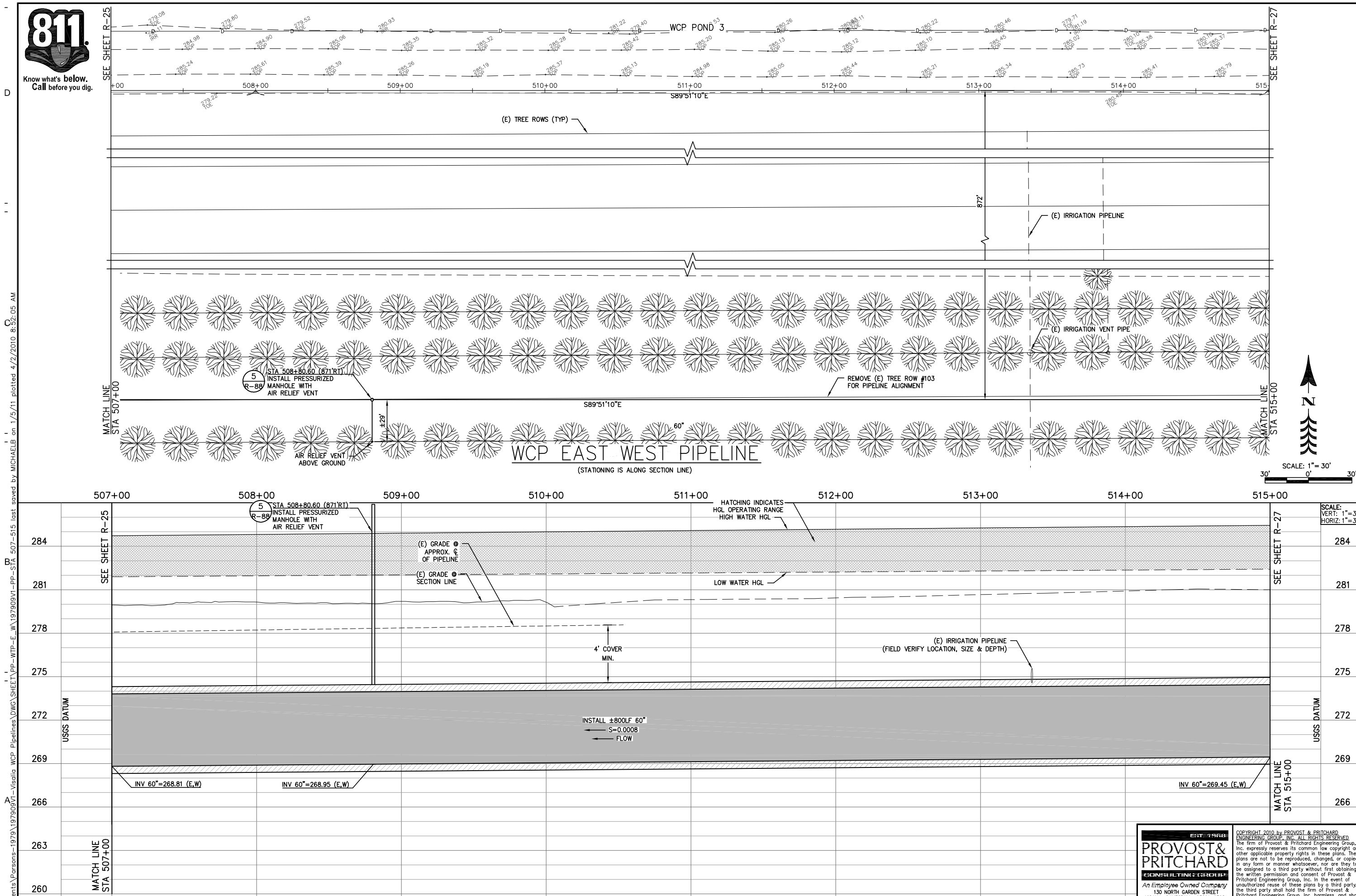


NOT FOR CONSTRUCTION

| REV. | DATE | BY | DESCRIPTION |
|---|---|---|---|

APPROVED BY: R.C.E. C47262
ENGINEERING SERVICES MANAGER FOR CITY ENGINEER
DATE:

APPROVED BY: R.C.E. C47262
ENGINEERING SERVICES MANAGER FOR CITY ENGINEER
DATE:

CITY OF VISALIA
PUBLIC WORKS DEPARTMENT
336 NORTH BEN MADDOX WAY
VISALIA CA. 93292

PARSONS
100 WEST WALNUT STREET
PASADENA, CA 91124
OFFICE: 626.440.2000
FAX: 626.440.6337
WWW.PARSONS.COM

PROJECT NAME: CITY OF VISALIA
WATER CONSERVATION PLANT UPGRADES

SHEET TITLE: RECYCLED WATER PIPELINE
WCP EAST WEST PIPELINE
STA 507-515

EST. 1968
PROVOST & PRITCHARD
CONSULTING GROUP
An Employee Owned Company
130 NORTH GARDEN STREET
VISALIA, CALIFORNIA 93291-6362
559/636-1166 FAX 559/636-1177
www.ppeng.com

COPYRIGHT 2010 by PROVOST & PRITCHARD ENGINEERING GROUP, INC. ALL RIGHTS RESERVED
The firm of Provost & Pritchard Engineering Group, Inc. expressly reserves its common law copyright and other applicable property rights in these plans. These plans are not to be reproduced, changed, or copied in any form or manner whatsoever, nor are they to be assigned to a third party without first obtaining the written permission and consent of Provost & Pritchard Engineering Group, Inc. In the event of unauthorized reuse of these plans by a third party, the third party shall hold the firm of Provost & Pritchard Engineering Group, Inc. harmless, and shall bear the cost of Provost & Pritchard Engineering Group, Inc.'s legal fees associated with defending and enforcing these rights.

| | |
|---|---|
| ISSUE DATE: | 12-6-2010 |
| CHECKED BY: | |
| DESIGNED BY: | |
| DRAWN BY: | P&P |
| SCALE: | AS NOTED |
| DWG. NO.: | R-26 |
| SHEET | OF |

V:\Clients\Parsons-1979\197909V1-Visalia WCP Pipelines\DWG\SHEET\PP-WTP-E_W\197909V1-PP-STA 507-515 last saved by MICHAELB on 1/5/11 plotted 4/2/2010 8:52:05 AM

V:\Clients\Parsons-1979\197909V1-Visalia WCP Pipelines\DWG\SHEET\PP-WTP-E_W\197909V1-PP-STA 507-515.dwg Jan 05, 2011 - 3:59pm

Know what's **below.** **Call** before you dig.

SEE SHT. R-31 FOR PLAN & PROFILE OF THIS SECTION OF NORTH/SOUTH PIPELINE.

PROPOSED BASIN (SEE BASIN PLANS)

SEE SHEET R-32

(E) DRAIN PIPELINE

(E) CONC. STRUCTURE

SEE SHEET R-26

516+00 517+00 518+00 519+00 520+00 521+00 522+00 523

S89°51'10"E

(E) TREE ROWS (TYP)

60" 60" 60"

SEE SHT. R-30 FOR PLAN & PROFILE OF THIS SECTION OF EAST/WEST PIPELINE.

SEE SHTS. R-29 FOR PLAN & PROFILE OF THIS SECTION OF NORTH/SOUTH PIPELINE.

SEE SHT. R-34 FOR PLAN & PROFILE OF THIS SECTION OF EAST/WEST PIPELINE.

872'

60"

N00°8'49"E

STA 517+00.51 (872'RT)(WCP EAST WEST)
STA 236+65.18 (1,694.6'RT)(RD 68)
INSTALL (2)-45° ELL

60"

MATCH LINE STA 515+00

MATCH LINE STA 523+00

# WCP EAST WEST PIPELINE

(STATIONING IS ALONG SECTION LINE)

N

SCALE: 1"= 30'
30' 0' 30'

515+00 516+00 517+00 518+00 519+00 520+00 521+00 522+00 523+00

SEE SHEET R-26

SEE SHEET R-28

HATCHING INDICATES HGL OPERATING RANGE

HIGH WATER HGL

(E) GRADE @ SECTION LINE

LOW WATER HGL

4' COVER MIN.

INSTALL ±200LF 60"
S=0.0008
FLOW

INV 60"=269.45 (E,W)

INV 60"=269.61 (W,N)

USGS DATUM

287 284 281 278 275 272 269 266 263

MATCH LINE STA 515+00

MATCH LINE STA 236+65.18

STATIONING IS ALONG RD68 ALIGNMENT WITH ±1695' OFFSET

NOT FOR CONSTRUCTION

SCALE:
VERT: 1"=3'
HORIZ: 1"=30'

| REV. | DATE | BY | DESCRIPTION |
|---|---|---|---|

APPROVED BY: R.C.E. 47282
ENGINEERING SERVICES MANAGER FOR CITY ENGINEER
DATE:

APPROVED BY: R.C.E. 47282
ENGINEERING SERVICES MANAGER FOR CITY ENGINEER
DATE:

CITY OF VISALIA
PUBLIC WORKS DEPARTMENT
336 NORTH BEN MADDOX WAY
VISALIA CA. 93292

PARSONS
100 WEST WALNUT STREET
PASADENA, CA 91124
OFFICE: 626.440.2000
FAX: 626.440.630
WWW.PARSONS.COM

PROJECT NAME: CITY OF VISALIA
WATER CONSERVATION PLANT UPGRADES

SHEET TITLE: RECYCLED WATER PIPELINE
WCP EAST WEST PIPELINE
STA 515-517

EST. 1968
PROVOST& PRITCHARD
CONSULTING GROUP
An Employee Owned Company
130 NORTH GARDEN STREET
VISALIA, CALIFORNIA 93291-6362
559/636-1166 FAX 559/636-1177
www.ppeng.com

COPYRIGHT 2010 by PROVOST & PRITCHARD ENGINEERING GROUP, INC. ALL RIGHTS RESERVED
The firm of Provost & Pritchard Engineering Group, Inc. expressly reserves its common law copyright and other applicable property rights in these plans. These plans are not to be reproduced, changed, or copied in any form or manner whatsoever, nor are they to be assigned to a third party without first obtaining the written permission and consent of Provost & Pritchard Engineering Group, Inc. In the event of unauthorized reuse of these plans by a third party, the third party shall hold the firm of Provost & Pritchard Engineering Group, Inc. harmless, and shall bear the cost of Provost & Pritchard Engineering Group, Inc.'s legal fees associated with defending and enforcing these rights.

| | |
|---|---|
| ISSUE DATE: | 12-6-2010 |
| CHECKED BY: | |
| DESIGNED BY: | |
| DRAWN BY: | P&P |
| SCALE: | AS NOTED |
| DWG. NO.: | R-27 |
| SHEET | OF |

V:\Clients\Parsons-1979\197909V1-Visalia WCP Pipelines\DWG\SHEET\PP-WTP-E_W\197909V1-PP-STA 515-517 last saved by MICHAELB on 1/5/11 plotted 4/6/2010 7:55:25 AM

V:\Clients\Parsons-1979\197909V1-Visalia WCP Pipelines\DWG\SHEET\PP-WTP-E_W\197909V1-PP-STA 515-517.dwg Jan 05, 2011 - 3:59pm

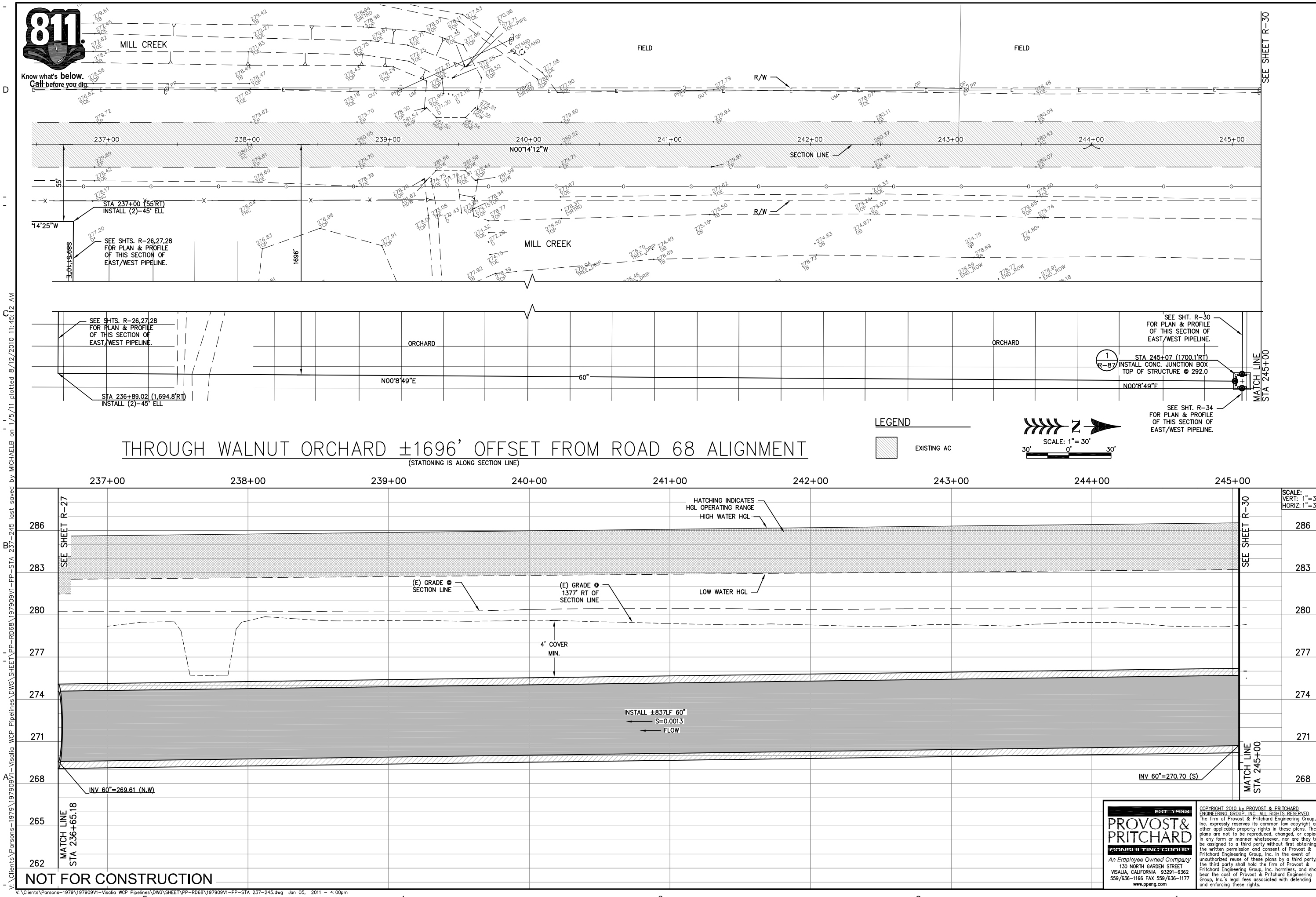


NOT FOR CONSTRUCTION

| REV. | DATE | BY | DESCRIPTION |
|---|---|---|---|

APPROVED BY: R.C.E. C47262
ENGINEERING SERVICES MANAGER FOR CITY ENGINEER
DATE:

APPROVED BY: R.C.E. C47262
ENGINEERING SERVICES MANAGER FOR CITY ENGINEER
DATE:

CITY OF VISALIA
PUBLIC WORKS DEPARTMENT
336 NORTH BEN MADDOX WAY
VISALIA CA. 93292

PARSONS
100 WEST WALNUT STREET
PASADENA, CA 91124
OFFICE: 626.440.2000
FAX: 626.440.6337
WWW.PARSONS.COM

PROJECT NAME: CITY OF VISALIA
WATER CONSERVATION PLANT UPGRADES

SHEET TITLE: RECYCLED WATER PIPELINE
WCP EAST WEST PIPELINE
STA 237-245

EST. 1968
PROVOST & PRITCHARD
CONSULTING GROUP
An Employee Owned Company
130 NORTH GARDEN STREET
VISALIA, CALIFORNIA 93291-6362
559/636-1166 FAX 559/636-1177
www.ppeng.com

COPYRIGHT 2010 by PROVOST & PRITCHARD ENGINEERING GROUP, INC. ALL RIGHTS RESERVED
The firm of Provost & Pritchard Engineering Group, Inc. expressly reserves its common law copyright and other applicable property rights in these plans. These plans are not to be reproduced, changed, or copied in any form or manner whatsoever, nor are they to be assigned to a third party without first obtaining the written permission and consent of Provost & Pritchard Engineering Group, Inc. In the event of unauthorized reuse of these plans by a third party, the third party shall hold the firm of Provost & Pritchard Engineering Group, Inc. harmless, and shall bear the cost of Provost & Pritchard Engineering Group, Inc.'s legal fees associated with defending and enforcing these rights.

| | |
|---|---|
| ISSUE DATE: | 12-6-2010 |
| CHECKED BY: | |
| DESIGNED BY: | |
| DRAWN BY: | P&P |
| SCALE: | AS NOTED |
| DWG. NO.: | R-28 |
| SHEET | OF |

V:\Clients\Parsons-1979\197909V1-Visalia WCP Pipelines\DWG\SHEET\PP-RD68\197909V1-PP-STA 237-245 last saved by MICHAELB on 1/5/11 plotted 8/12/2010 11:45:12 AM

V:\Clients\Parsons-1979\197909V1-Visalia WCP Pipelines\DWG\SHEET\PP-RD68\197909V1-PP-STA 237-245.dwg Jan 05, 2011 - 4:00pm

Know what's **below.** **Call** before you dig.

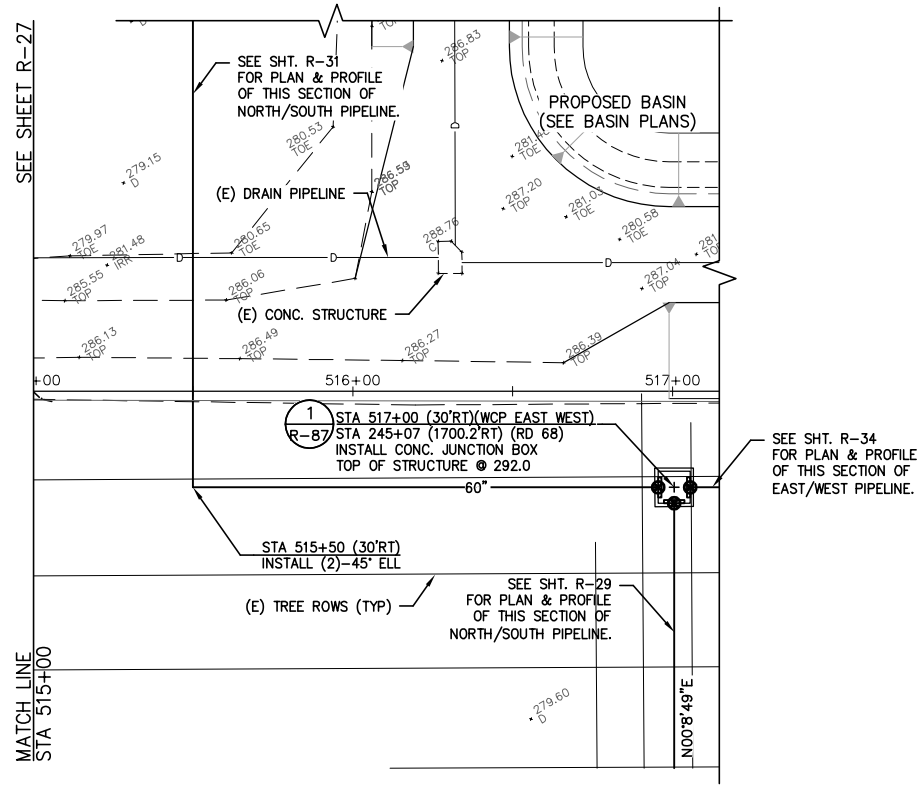


# BASIN OUTLET

(STATIONING IS ALONG SECTION LINE)

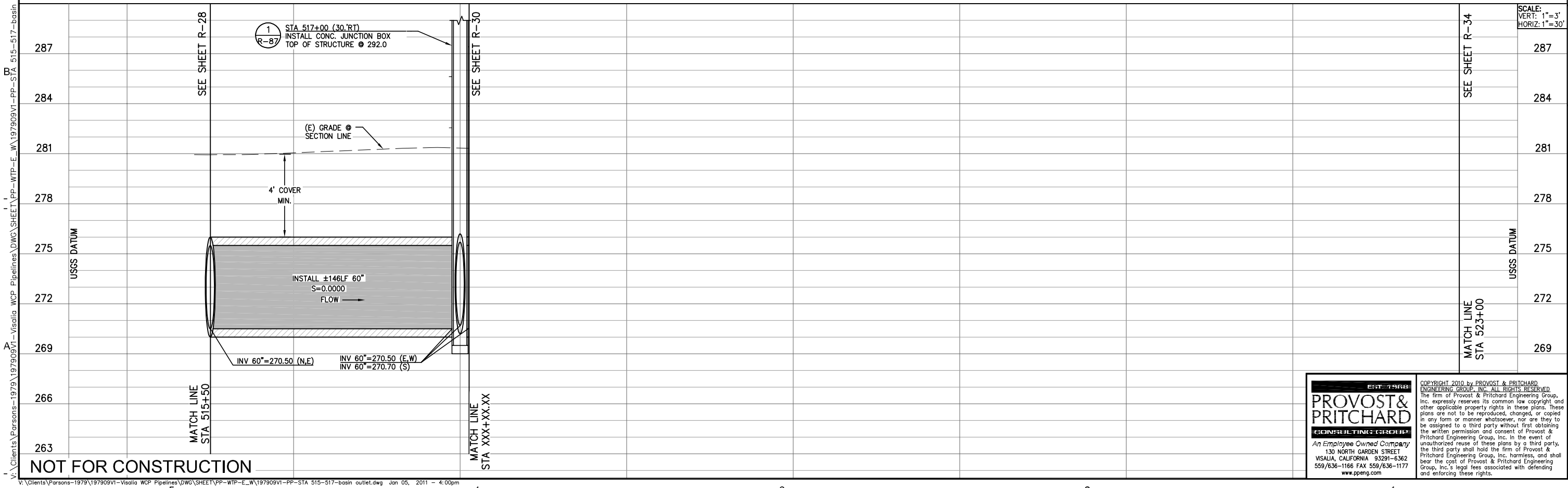


NOT FOR CONSTRUCTION

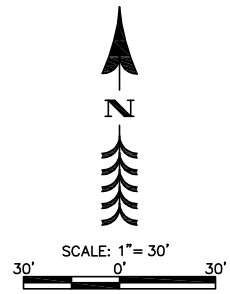


SCALE: 1"= 30'
30' 0' 30'

| REV. | DATE | BY | DESCRIPTION |
|---|---|---|---|
| | | | |

APPROVED BY: _____ R.C.E. 047282
ENGINEERING SERVICES MANAGER FOR CITY ENGINEER
DATE: _____

APPROVED BY: _____ R.C.E. 047282
ENGINEERING SERVICES MANAGER FOR CITY ENGINEER
DATE: _____

CITY OF VISALIA
ENGINEERING DIVISION - PUBLIC WORKS DEPARTMENT
336 NORTH BEN MADDOX WAY
VISALIA CA. 93292

SCALE:
VERT: 1"=3'
HORIZ: 1"=30'

PARSONS
100 WEST WALNUT STREET
PASADENA, CA 91124
OFFICE: 626.440.2000
FAX: 626.440.2630
WWW.PARSONS.COM

PROJECT NAME: CITY OF VISALIA
WATER CONSERVATION PLANT UPGRADES

SHEET TITLE: RECYCLED WATER PIPELINE
WCP EAST WEST PIPELINE
STA 515-517-BASIN OUTLET

EST. 1988
PROVOST& PRITCHARD
CONSULTING GROUP
An Employee Owned Company
130 NORTH GARDEN STREET
VISALIA, CALIFORNIA 93291-6362
559/636-1166 FAX 559/636-1177
www.ppeng.com

COPYRIGHT 2010 by PROVOST & PRITCHARD ENGINEERING GROUP, INC. ALL RIGHTS RESERVED
The firm of Provost & Pritchard Engineering Group, Inc. expressly reserves its common law copyright and other applicable property rights in these plans. These plans are not to be reproduced, changed, or copied in any form or manner whatsoever, nor are they to be assigned to a third party without first obtaining the written permission and consent of Provost & Pritchard Engineering Group, Inc. In the event of unauthorized reuse of these plans by a third party, the third party shall hold the firm of Provost & Pritchard Engineering Group, Inc. harmless, and shall bear the cost of Provost & Pritchard Engineering Group, Inc.'s legal fees associated with defending and enforcing these rights.

| | |
|---|---|
| ISSUE DATE: | 12-6-2010 |
| CHECKED BY: | |
| DESIGNED BY: | |
| DRAWN BY: | P&P |
| SCALE: | AS NOTED |
| DWG. NO.: | R-29 |
| SHEET | OF |

V:\Clients\Parsons-1979\197909V1-Visalia WCP Pipelines\DWG\SHEET\PP-WTP-E_W\197909V1-PP-STA 515-517-basin Outlet last saved by MICHAELB on 1/5/11 plotted 8/12/2010 10:32:58 AM

V:\Clients\Parsons-1979\197909V1-Visalia WCP Pipelines\DWG\SHEET\PP-WTP-E_W\197909V1-PP-STA 515-517-basin outlet.dwg Jan 05, 2011 - 4:00pm

Know what's **below.** **Call** before you dig.

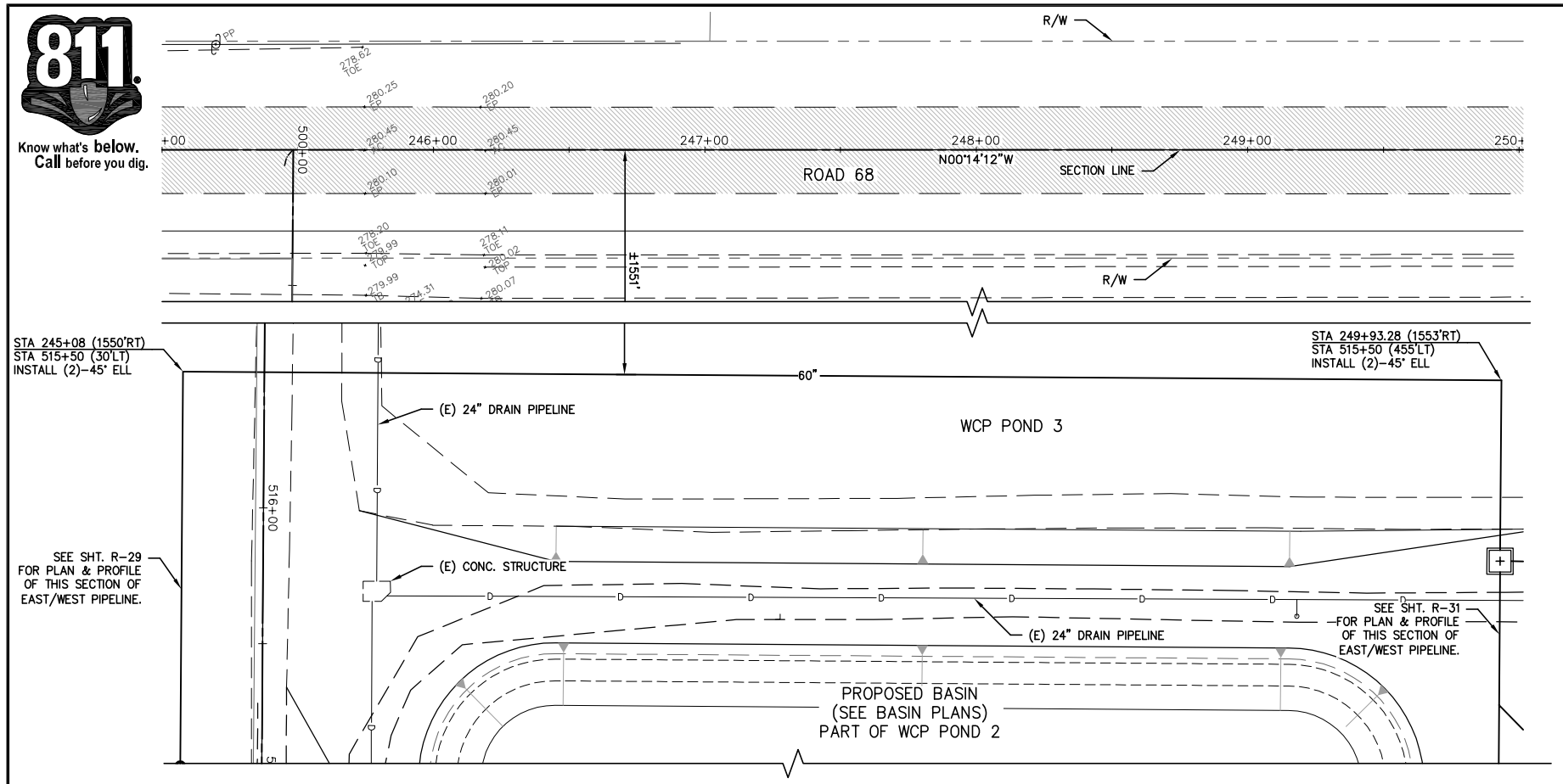


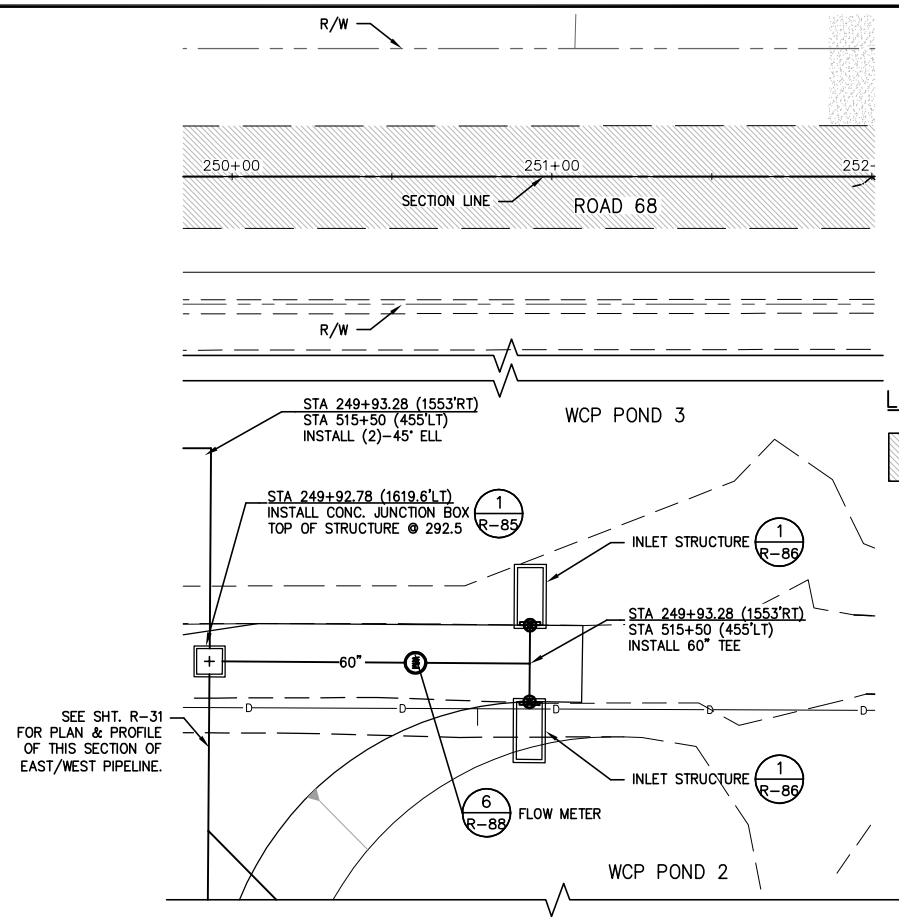


LEGEND

EXISTING AC

# BASIN OUTLET

(STATIONING IS ALONG SECTION LINE)

SCALE: 1"= 30'
30' 0' 30'

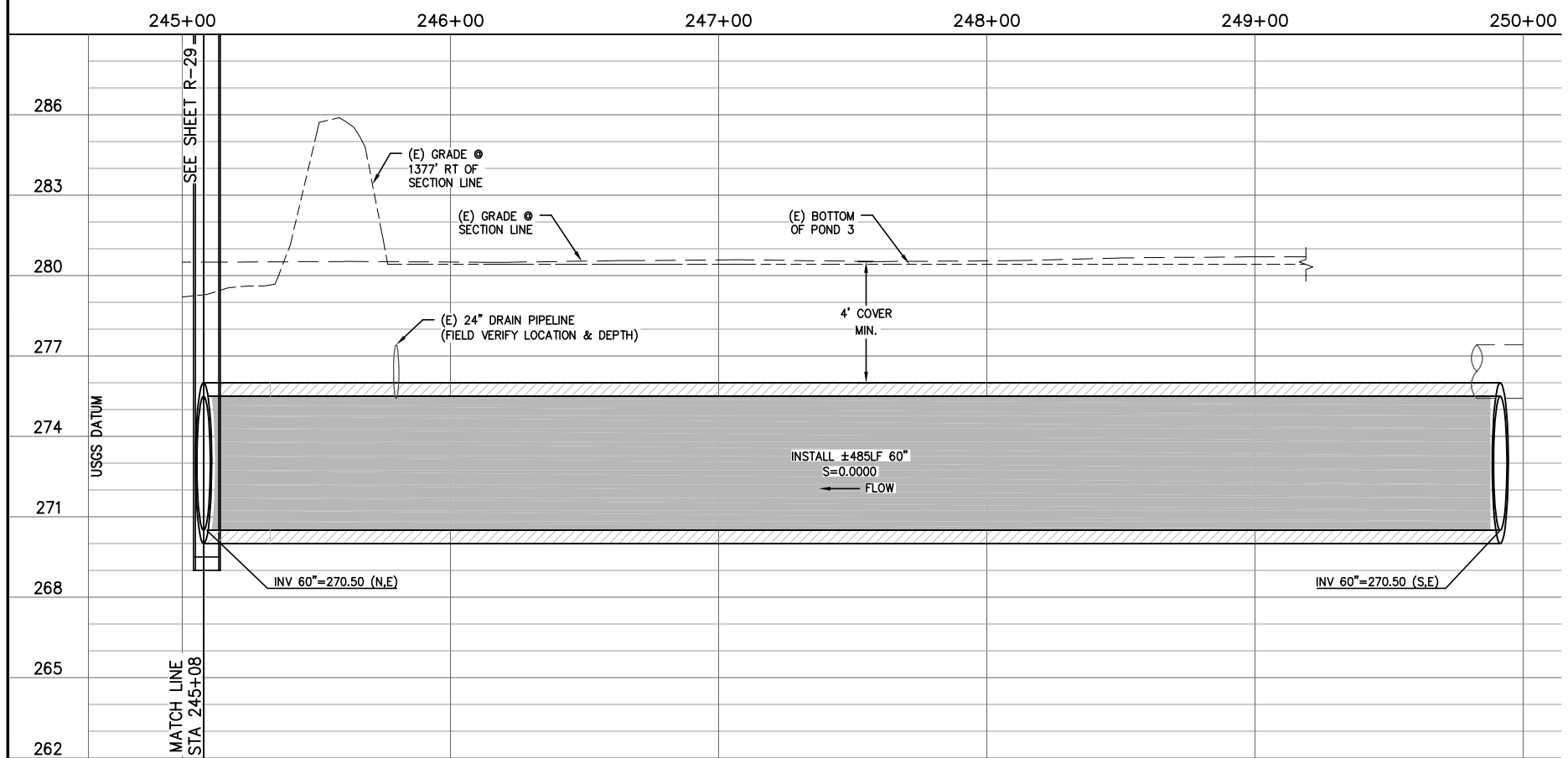


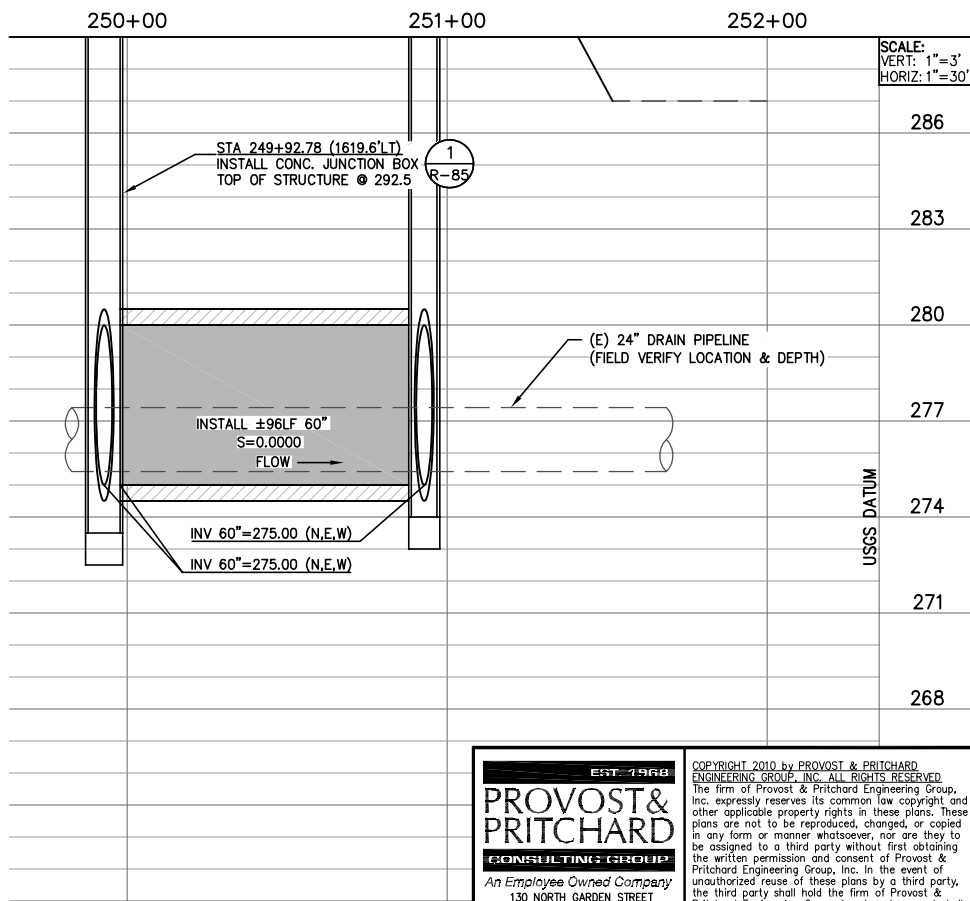


NOT FOR CONSTRUCTION

| REV. | DATE | BY | DESCRIPTION |
|---|---|---|---|
| | | | |

APPROVED BY: R.C.E. 47282
ENGINEERING SERVICES MANAGER FOR CITY ENGINEER
DATE:

APPROVED BY: R.C.E. 47282
ENGINEERING SERVICES MANAGER FOR CITY ENGINEER
DATE:


PARSONS
100 WEST WALNUT STREET
PASADENA, CA 91124
OFFICE: 626.440.2000
FAX: 626.440.4505
WWW.PARSONS.COM


PROJECT NAME: CITY OF VISALIA
WATER CONSERVATION PLANT UPGRADES

SHEET TITLE: RECYCLED WATER PIPELINE
WCP EAST WEST PIPELINE
STA 245-252-BASIN OUTLET


EST. 1968
PROVOST & PRITCHARD
CONSULTING GROUP
An Employee Owned Company
130 NORTH GARDEN STREET
VISALIA, CALIFORNIA 93291-6362
559/636-1166 FAX 559/636-1177
www.ppeng.com



COPYRIGHT 2010 by PROVOST & PRITCHARD ENGINEERING GROUP, INC. ALL RIGHTS RESERVED
The firm of Provost & Pritchard Engineering Group, Inc. expressly reserves its common law copyright and other applicable property rights in these plans. These plans are not to be reproduced, changed, or copied in any form or manner whatsoever, nor are they to be assigned to a third party without first obtaining the written permission and consent of Provost & Pritchard Engineering Group, Inc. In the event of unauthorized reuse of these plans by a third party, the third party shall hold the firm of Provost & Pritchard Engineering Group, Inc. harmless, and shall bear the cost of Provost & Pritchard Engineering Group, Inc.'s legal fees associated with defending and enforcing these rights.


| | |
|---|---|
| ISSUE DATE: | 12-6-2010 |
| CHECKED BY: | |
| DESIGNED BY: | |
| DRAWN BY: | P&P |
| SCALE: | AS NOTED |
| DWG. NO.: | R-30 |
| SHEET | OF |

1/5/2011 4:01 PM V:\Clients\Parsons-1979\19790V1-Visalia WCP Pipelines\DWG\SHEET\PP-R068\19790V1-PP-STA 245-252.dwg -Gabriel Do Reynoso

Know what's **below.** **Call** before you dig.

SEE SHT. R-30 FOR PLAN & PROFILE OF THIS SECTION OF NORTH/SOUTH PIPELINE.

1 / R-85 STA 516+16.56 (455.2'LT) INSTALL CONC. DISTRIBUTION BOX

STA 515+50 (455'LT) INSTALL (2)-45° ELL

3 / R-62

60" 60" 60"

STA 517+22.13 (507.7'LT) INSTALL 45° ELL

STA 517+06.96 (455'LT) INSTALL (2)-45° ELL

STA 516+69.57 (455.2'LT) INSTALL 45° WYE

(E) 24" DRAIN PIPELINE

WCP POND 2

WCP POND 3

PROPOSED BASIN
(SEE BASIN PLANS FOR INLET & OUTLET STRUCTURES)

SEE SHEET R-32

MATCH LINE STA 523+00

+00 516+00 517+00 518+00 519+00 520+00 521+00 522+00 523+00

S89°51'10"E

SCALE: 1"= 30'
30' 0' 30'

# BASIN OUTLET

(STATIONING IS ALONG SECTION LINE)

515+00 516+00 517+00 518+00 519+00 520+00 521+00 522+00 523+00

STA 516+16.56 (455.2'LT) INSTALL CONC. DISTRIBUTION BOX TOP OF STRUCTURE @ 292.0 (1 / R-85)

WCP POND 3 WCP POND 3

(E) GRADE @ APPROX. CENTERLINE OF PIPE

(E) 24" DRAIN PIPELINE (FIELD VERIFY LOCATION & DEPTH)

INSTALL ±6LF 60" INSTALL ±10LF 60"

INSTALL ±6LF 60" INSTALL ±10LF 60"

INSTALL ±46LF 60" FLOW

INSTALL ±710LF 60" (TO DIST. BOX) S=0.0000 FLOW

INV 60"=270.50 (S,E)

INV 60"=270.50 (E,W)

USGS DATUM

287 284 281 278 275 272 269 266 263

SEE SHEET R-32

MATCH LINE STA 523+00

SCALE: VERT: 1"=3' HORIZ: 1"=30'

NOT FOR CONSTRUCTION

APPROVED BY: R.C.E. 47282
ENGINEERING SERVICES MANAGER FOR CITY ENGINEER
DATE:

APPROVED BY: R.C.E. 47282
ENGINEERING SERVICES MANAGER FOR CITY ENGINEER
DATE:

| REV. | DATE | BY | DESCRIPTION |
|---|---|---|---|

CITY OF VISALIA
ENGINEERING DEPARTMENT
336 NORTH BEN MADDOX WAY
VISALIA CA. 93292

PARSONS
100 WEST WALNUT STREET
PASADENA, CA 91124
OFFICE: 626.440.2000
FAX: 626.440.2630
WWW.PARSONS.COM

PROJECT NAME: CITY OF VISALIA
WATER CONSERVATION PLANT UPGRADES

SHEET TITLE: RECYCLED WATER PIPELINE
WCP EAST WEST PIPELINE
STA 515-523-BASIN OUTLET

EST. 1968
PROVOST & PRITCHARD
CONSULTING GROUP
*An Employee Owned Company*
130 NORTH GARDEN STREET
VISALIA, CALIFORNIA 93291-6362
559/636-1166 FAX 559/636-1177
www.ppeng.com

COPYRIGHT 2010 by PROVOST & PRITCHARD ENGINEERING GROUP, INC. ALL RIGHTS RESERVED
The firm of Provost & Pritchard Engineering Group, Inc. expressly reserves its common law copyright and other applicable property rights in these plans. These plans are not to be reproduced, changed, or copied in any form or manner whatsoever, nor are they to be assigned to a third party without first obtaining the written permission and consent of Provost & Pritchard Engineering Group, Inc. In the event of unauthorized reuse of these plans by a third party, the third party shall hold the firm of Provost & Pritchard Engineering Group, Inc. harmless, and shall bear the cost of Provost & Pritchard Engineering Group, Inc.'s legal fees associated with defending and enforcing these rights.

| | |
|---|---|
| ISSUE DATE: | 12-6-2010 |
| CHECKED BY: | |
| DESIGNED BY: | |
| DRAWN BY: | P&P |
| SCALE: | AS NOTED |
| DWG. NO.: | R-31 |
| SHEET | OF |

V:\Clients\Parsons-1979\197909V1-Visalia WCP Pipelines\DWG\SHEET\PP-WTP-E_W\197909V1-PP-STA 515-523-basin outlet.dwg Jan 05, 2011 - 4:02pm
last saved by MIKEPR on 1/5/11 plotted 8/5/2010 11:48:51 AM

Know what's **below.** **Call** before you dig.

WCP POND 2

SEE SHEET R-31

60"

STA 529+29.1 (507.3'LT)
INSTALL (2)-45° ELL

60"

(E) 24" DRAIN PIPELINE

(E) CONC. STRUCTURE

SECTION LINE

PROPOSED BASIN
(SEE BASIN PLANS FOR INLET & OUTLET STRUCTURES)

(E) 24" DRAIN PIPELINE

(E) CONC. STRUCTURE

MATCH LINE
STA 523+00

S89°51'10"E

S89°51'10"E

523+00 524+00 525+00 526+00 527+00 528+00 529+00 530+00 531+00

# BASIN OUTLET

(STATIONING IS ALONG SECTION LINE)

SCALE: 1"=30'
30' 0' 30'

SCALE:
VERT: 1"=3'
HORIZ: 1"=30'

290 287 284 281 278 275 272 269 266

USGS DATUM

SEE SHEET R-31

(E) GRADE @ APPROX.
CENTERLINE OF PIPE

INSTALL ±709LF 60" (TO OUTLET BOX)
S=0.0000
← FLOW

INV 60"=270.50 (E,W)

INV 60"=270.50 (W,S)

MATCH LINE
STA 523+00

NOT FOR CONSTRUCTION

| REV. | DATE | BY | DESCRIPTION |
|---|---|---|---|
| | | | |

APPROVED BY: R.C.E. 047262
ENGINEERING SERVICES MANAGER FOR CITY ENGINEER
DATE:

APPROVED BY: R.C.E. 047262
ENGINEERING SERVICES MANAGER FOR CITY ENGINEER
DATE:

CITY OF VISALIA
PUBLIC WORKS DEPARTMENT
ENGINEERING DIVISION
336 NORTH BEN MADDOX WAY
VISALIA CA. 93292


PARSONS
100 WEST WALNUT STREET
PASADENA, CA 91124
OFFICE: 626.440.2000
FAX: 626.440.4037
WWW.PARSONS.COM


PROJECT NAME: CITY OF VISALIA
WATER CONSERVATION PLANT UPGRADES

SHEET TITLE: RECYCLED WATER PIPELINE
WCP EAST WEST PIPELINE
STA 523-531-BASIN OUTLET


EST. 1968
PROVOST & PRITCHARD
CONSULTING GROUP
An Employee Owned Company
130 NORTH GARDEN STREET
VISALIA, CALIFORNIA 93291-6362
559/636-1166 FAX 559/636-1177
www.ppeng.com



COPYRIGHT 2010 by PROVOST & PRITCHARD ENGINEERING GROUP, INC. ALL RIGHTS RESERVED
The firm of Provost & Pritchard Engineering Group, Inc. expressly reserves its common law copyright and other applicable property rights in these plans. These plans are not to be reproduced, changed, or copied in any form or manner whatsoever, nor are they to be assigned to a third party without first obtaining the written permission and consent of Provost & Pritchard Engineering Group, Inc. In the event of unauthorized reuse of these plans by a third party, the third party shall hold the firm of Provost & Pritchard Engineering Group, Inc. harmless, and shall bear the cost of Provost & Pritchard Engineering Group, Inc.'s legal fees associated with defending and enforcing these rights.


| | |
|---|---|
| ISSUE DATE: | 12-6-2010 |
| CHECKED BY: | |
| DESIGNED BY: | |
| DRAWN BY: | P&P |
| SCALE: | AS NOTED |
| DWG. NO.: | R-32 |
| SHEET | OF |


V:\Clients\Parsons-1979\197909V1-Visalia WCP Pipelines\DWG\SHEET\PP-WTP-E_W\197909V1-PP-STA 523-531-basin outlet last saved by MICHAELB on 1/5/11 plotted 8/5/2010 12:45:27 PM
V:\Clients\Parsons-1979\197909V1-Visalia WCP Pipelines\DWG\SHEET\PP-WTP-E_W\197909V1-PP-STA 523-531-basin outlet.dwg Jan 05, 2011 - 4:03pm

Know what's **below.** **Call** before you dig.

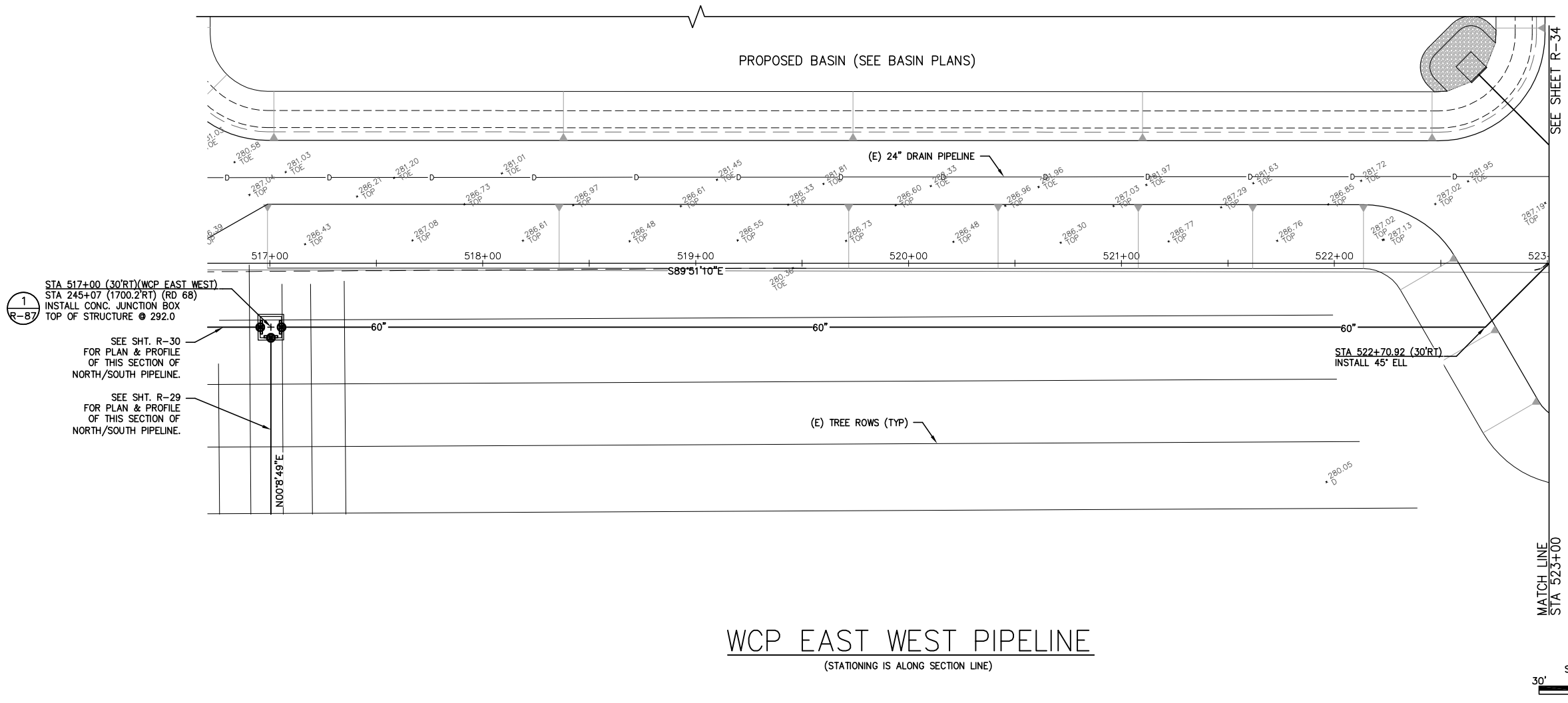


# WCP EAST WEST PIPELINE

(STATIONING IS ALONG SECTION LINE)

SCALE: 1"= 30'
30' 0' 30'

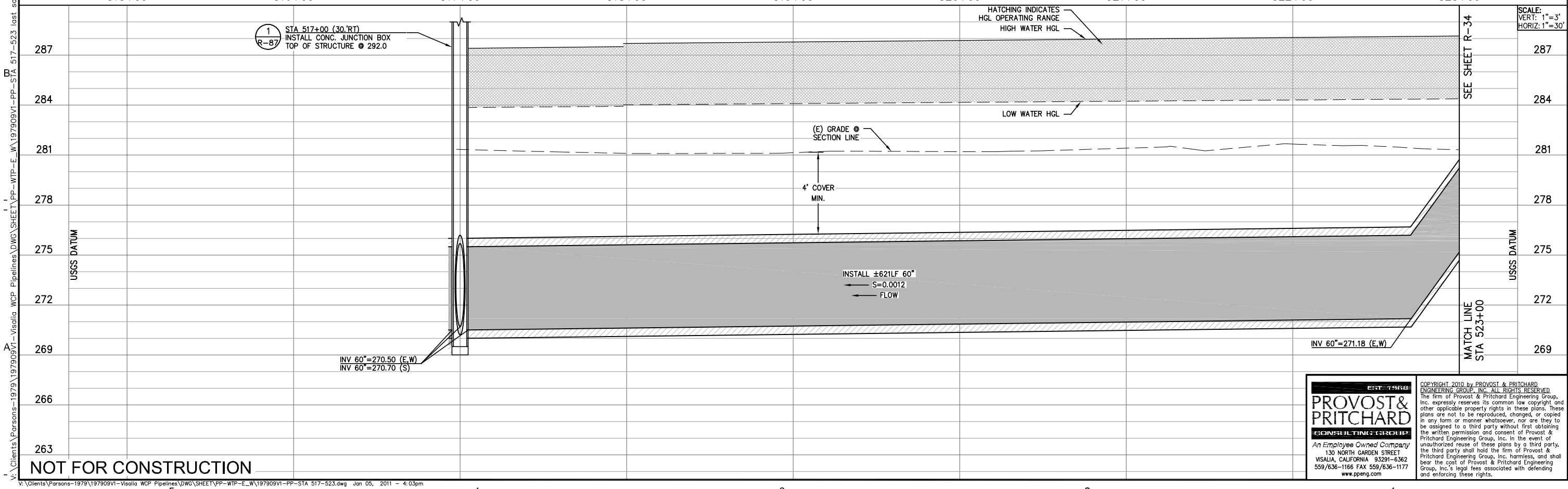


NOT FOR CONSTRUCTION

| REV. | DATE | BY | DESCRIPTION |
|---|---|---|---|
| | | | |

APPROVED BY: _____ R.C.E. 047982
ENGINEERING SERVICES MANAGER FOR CITY ENGINEER
DATE: _____

APPROVED BY: _____ R.C.E. 047982
ENGINEERING SERVICES MANAGER FOR CITY ENGINEER
DATE: _____

CITY OF VISALIA
ENGINEERING DIVISION
PUBLIC WORKS DEPARTMENT
336 NORTH BEN MADDOX WAY
VISALIA CA. 93292


PARSONS
100 WEST WALNUT STREET
PASADENA, CA 91124
OFFICE: 626.440.2000
FAX: 626.440.2630
WWW.PARSONS.COM


PROJECT NAME: CITY OF VISALIA
WATER CONSERVATION PLANT UPGRADES

SHEET TITLE: RECYCLED WATER PIPELINE
WCP EAST WEST PIPELINE
STA 517-523


EST. 1968
PROVOST& PRITCHARD
CONSULTING GROUP
An Employee Owned Company
130 NORTH GARDEN STREET
VISALIA, CALIFORNIA 93291-6362
559/636-1166 FAX 559/636-1177
www.ppeng.com



COPYRIGHT 2010 by PROVOST & PRITCHARD ENGINEERING GROUP, INC. ALL RIGHTS RESERVED
The firm of Provost & Pritchard Engineering Group, Inc. expressly reserves its common law copyright and other applicable property rights in these plans. These plans are not to be reproduced, changed, or copied in any form or manner whatsoever, nor are they to be assigned to a third party without first obtaining the written permission and consent of Provost & Pritchard Engineering Group, Inc. In the event of unauthorized reuse of these plans by a third party, the third party shall hold the firm of Provost & Pritchard Engineering Group, Inc. harmless, and shall bear the cost of Provost & Pritchard Engineering Group, Inc.'s legal fees associated with defending and enforcing these rights.


| | |
|---|---|
| ISSUE DATE: | 12-6-2010 |
| CHECKED BY: | |
| DESIGNED BY: | |
| DRAWN BY: | P&P |
| SCALE: | AS NOTED |
| DWG. NO.: | R-33 |
| SHEET | OF |


V:\Clients\Parsons-1979\197909V1-Visalia WCP Pipelines\DWG\SHEET\PP-WTP-E_W\197909V1-PP-STA 517-523.dwg Jan 05, 2011 - 4:03pm
V:\Clients\Parsons-1979\197909V1-Visalia WCP Pipelines\DWG\SHEET\PP-WTP-E_W\197909V1-PP-STA 517-523 last saved by MICHAELB on 1/5/11 plotted 8/4/2010 2:14:55 PM

Know what's **below.** **Call** before you dig.

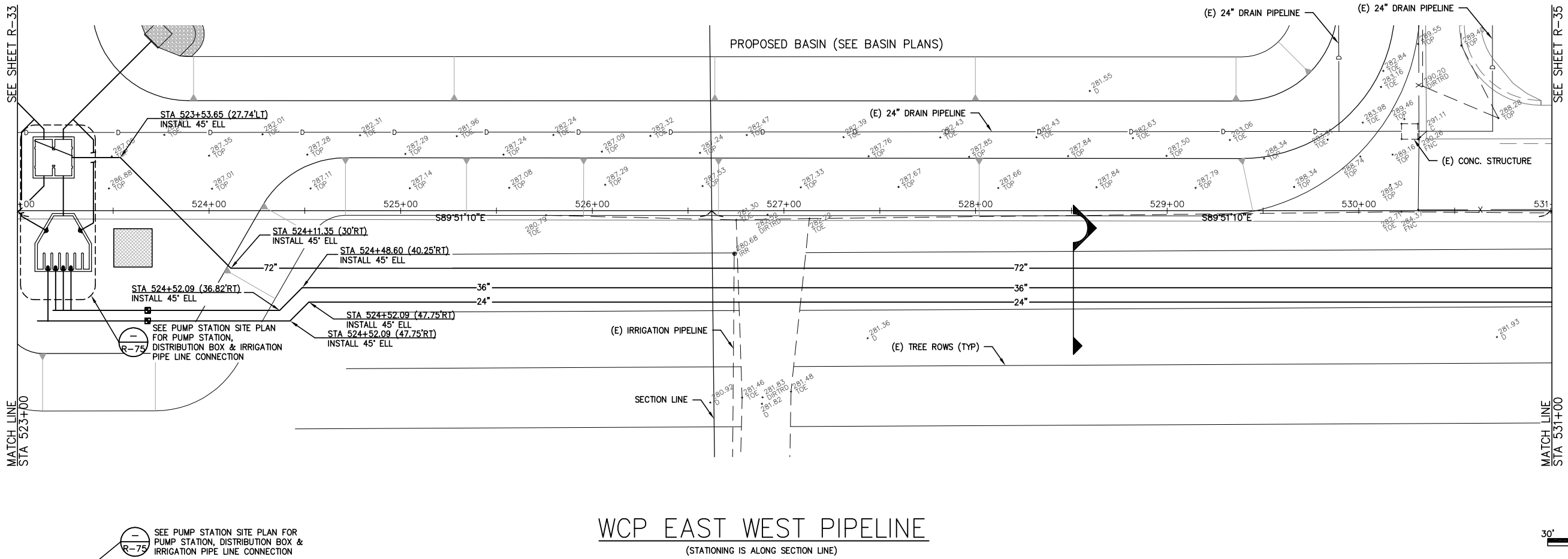


# WCP EAST WEST PIPELINE

(STATIONING IS ALONG SECTION LINE)

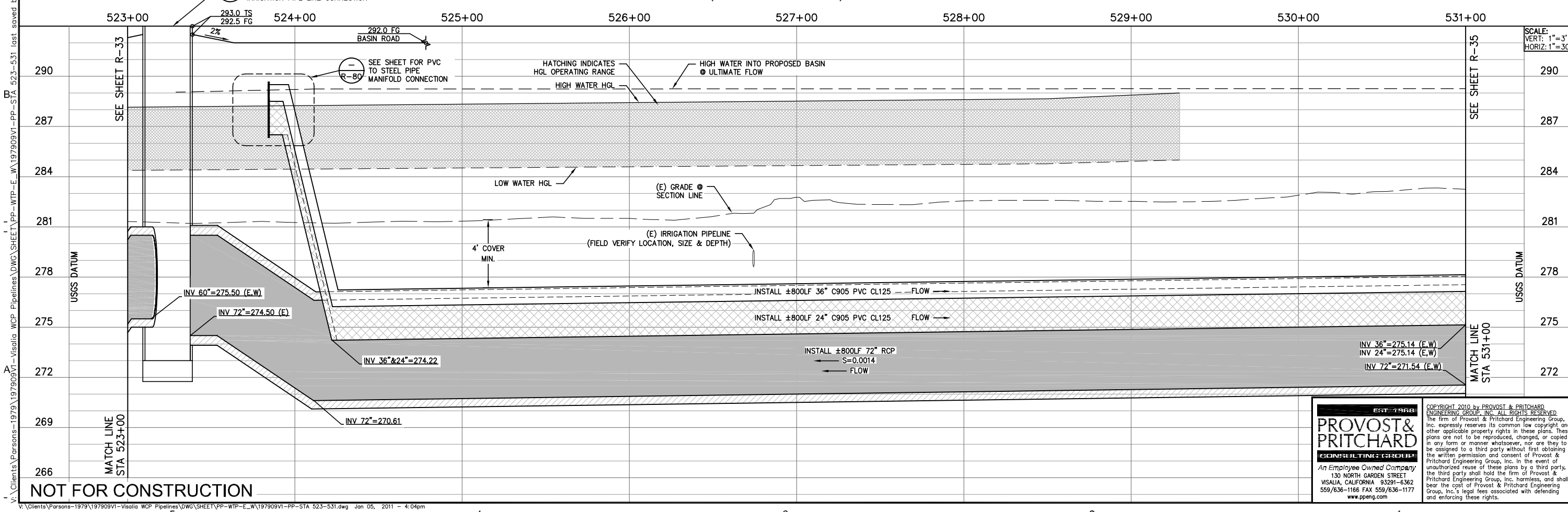


SCALE:
VERT: 1"=3'
HORIZ: 1"=30'

NOT FOR CONSTRUCTION

| REV. | DATE | BY | DESCRIPTION |
|---|---|---|---|
| | | | |

APPROVED BY: _____ R.C.E. 047282
ENGINEERING SERVICES MANAGER FOR CITY ENGINEER
DATE: _____

APPROVED BY: _____ R.C.E. 047282
ENGINEERING SERVICES MANAGER FOR CITY ENGINEER
DATE: _____

CITY OF VISALIA
PUBLIC WORKS DEPARTMENT
ENGINEERING DIVISION
336 NORTH BEN MADDOX WAY
VISALIA CA. 93292

PARSONS
100 WEST WALNUT STREET
PASADENA, CA 91124
OFFICE: 626.440.2000
FAX: 626.405.1357
WWW.PARSONS.COM

PROJECT NAME: CITY OF VISALIA
WATER CONSERVATION PLANT UPGRADES

SHEET TITLE: RECYCLED WATER PIPELINE
WCP EAST WEST PIPELINE
STA 523-531

| | |
|---|---|
| ISSUE DATE: | 12-6-2010 |
| CHECKED BY: | |
| DESIGNED BY: | |
| DRAWN BY: | P&P |
| SCALE: | AS NOTED |
| DWG. NO.: | R-34 |
| SHEET | OF |

EST. 1968
PROVOST & PRITCHARD
CONSULTING GROUP
An Employee Owned Company
130 NORTH GARDEN STREET
VISALIA, CALIFORNIA 93291-6362
559/636-1166 FAX 559/636-1177
www.ppeng.com

COPYRIGHT 2010 by PROVOST & PRITCHARD ENGINEERING GROUP, INC. ALL RIGHTS RESERVED
The firm of Provost & Pritchard Engineering Group, Inc. expressly reserves its common law copyright and other applicable property rights in these plans. These plans are not to be reproduced, changed, or copied in any form or manner whatsoever, nor are they to be assigned to a third party without first obtaining the written permission and consent of Provost & Pritchard Engineering Group, Inc. In the event of unauthorized reuse of these plans by a third party, the third party shall hold the firm of Provost & Pritchard Engineering Group, Inc. harmless, and shall bear the cost of Provost & Pritchard Engineering Group, Inc.'s legal fees associated with defending and enforcing these rights.

V:\Clients\Parsons-1979\197909V1-Visalia WCP Pipelines\DWG\SHEET\PP-WTP-E_W\197909V1-PP-STA 523-531.dwg Jan 05, 2011 - 4:04pm
V:\Clients\Parsons-1979\197909V1-Visalia WCP Pipelines\DWG\SHEET\PP-WTP-E_W\197909V1-PP-STA 523-531 last saved by MICHAELB on 1/5/11 plotted 4/6/2010 8:38:41 AM

Know what's **below.** **Call** before you dig.

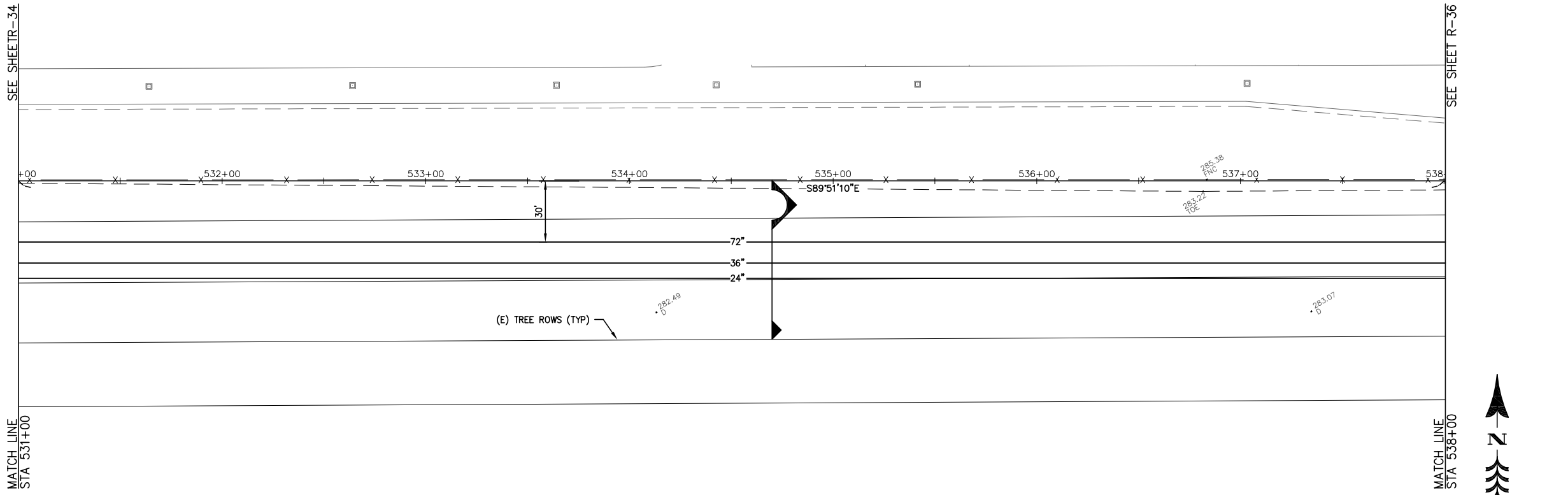


# WCP EAST WEST PIPELINE

(STATIONING IS ALONG SECTION LINE)

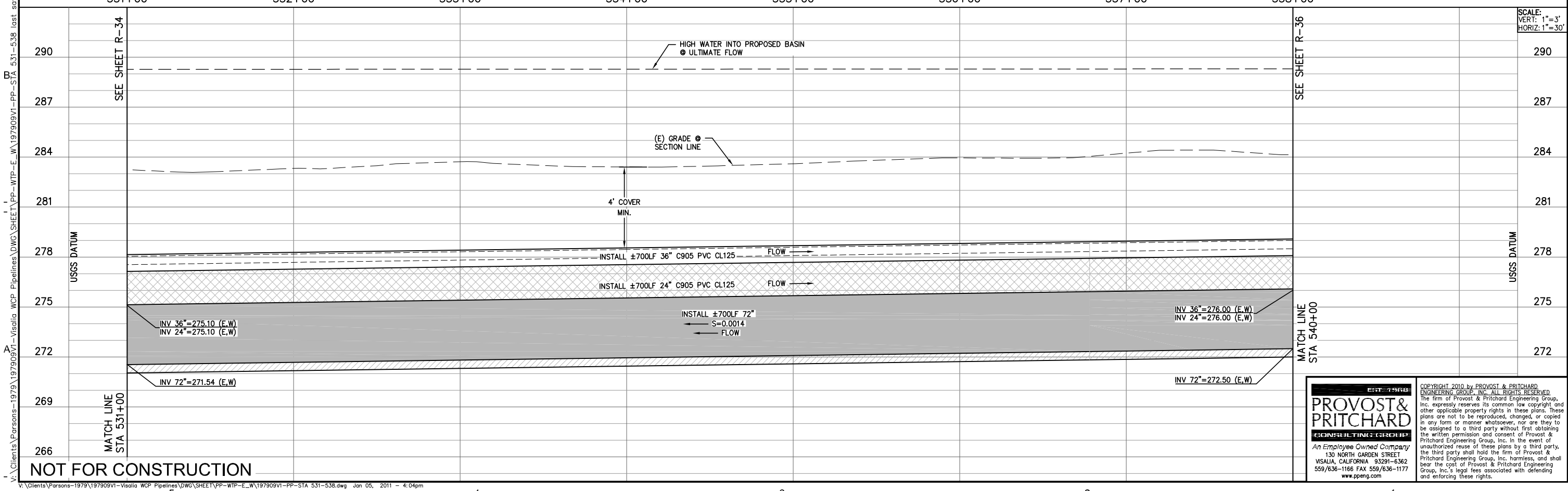


NOT FOR CONSTRUCTION

| REV. | DATE | BY | DESCRIPTION |
|---|---|---|---|
| | | | |

APPROVED BY: _____ R.C.E. 047282
ENGINEERING SERVICES MANAGER FOR CITY ENGINEER
DATE: _____

APPROVED BY: _____ R.C.E. 047282
ENGINEERING SERVICES MANAGER FOR CITY ENGINEER
DATE: _____

CITY OF VISALIA
ENGINEERING DEPARTMENT
336 NORTH BEN MADDOX WAY
VISALIA CA. 93292

PARSONS
100 WEST WALNUT STREET
PASADENA, CA 91124
OFFICE: 626.440.2000
FAX: 626.440.2630
WWW.PARSONS.COM

PROJECT NAME: CITY OF VISALIA
WATER CONSERVATION PLANT UPGRADES

SHEET TITLE: RECYCLED WATER PIPELINE
WCP EAST WEST PIPELINE
STA 531-538

EST. 1968
PROVOST & PRITCHARD
CONSULTING GROUP
*An Employee Owned Company*
130 NORTH GARDEN STREET
VISALIA, CALIFORNIA 93291-6362
559/636-1166 FAX 559/636-1177
www.ppeng.com

COPYRIGHT 2010 by PROVOST & PRITCHARD ENGINEERING GROUP, INC. ALL RIGHTS RESERVED
The firm of Provost & Pritchard Engineering Group, Inc. expressly reserves its common law copyright and other applicable property rights in these plans. These plans are not to be reproduced, changed, or copied in any form or manner whatsoever, nor are they to be assigned to a third party without first obtaining the written permission and consent of Provost & Pritchard Engineering Group, Inc. In the event of unauthorized reuse of these plans by a third party, the third party shall hold the firm of Provost & Pritchard Engineering Group, Inc. harmless, and shall bear the cost of Provost & Pritchard Engineering Group, Inc.'s legal fees associated with defending and enforcing these rights.

| | |
|---|---|
| ISSUE DATE: | 12-6-2010 |
| CHECKED BY: | |
| DESIGNED BY: | |
| DRAWN BY: | P&P |
| SCALE: | AS NOTED |
| DWG. NO.: | R-35 |
| SHEET | OF |

V:\Clients\Parsons-1979\197909V1-Visalia WCP Pipelines\DWG\SHEET\PP-WTP-E_W\197909V1-PP-STA 531-538.dwg Jan 05, 2011 - 4:04pm
by MICHAELB on 1/5/11 plotted 4/6/2010 9:39:42 AM
last saved by MICHAELB on 1/5/11

Know what's **below.** **Call** before you dig.

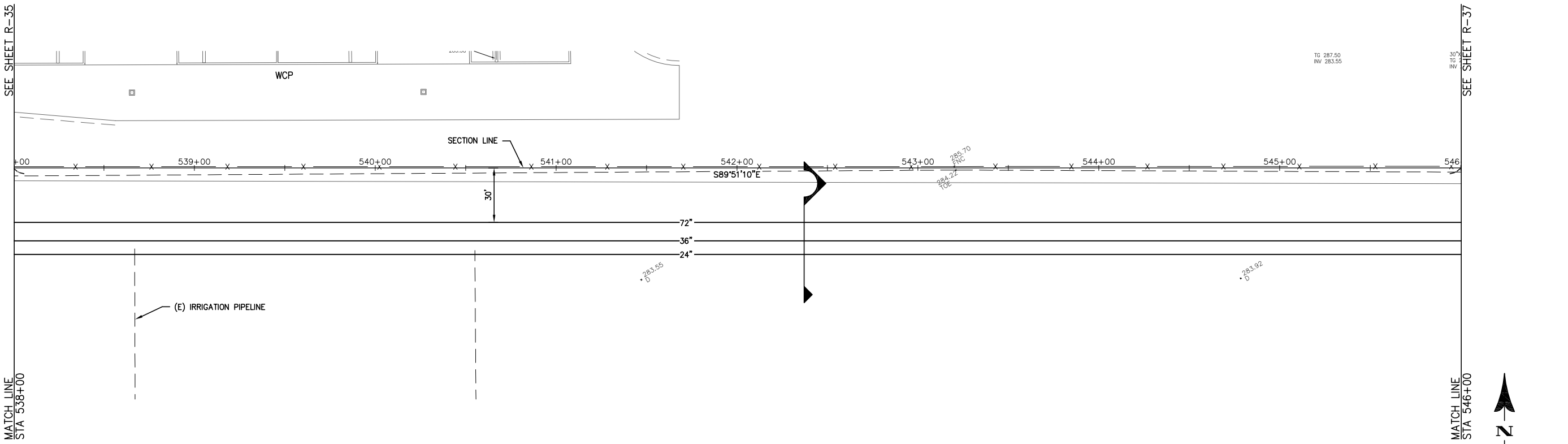


# WCP EAST WEST PIPELINE

(STATIONING IS ALONG SECTION LINE)

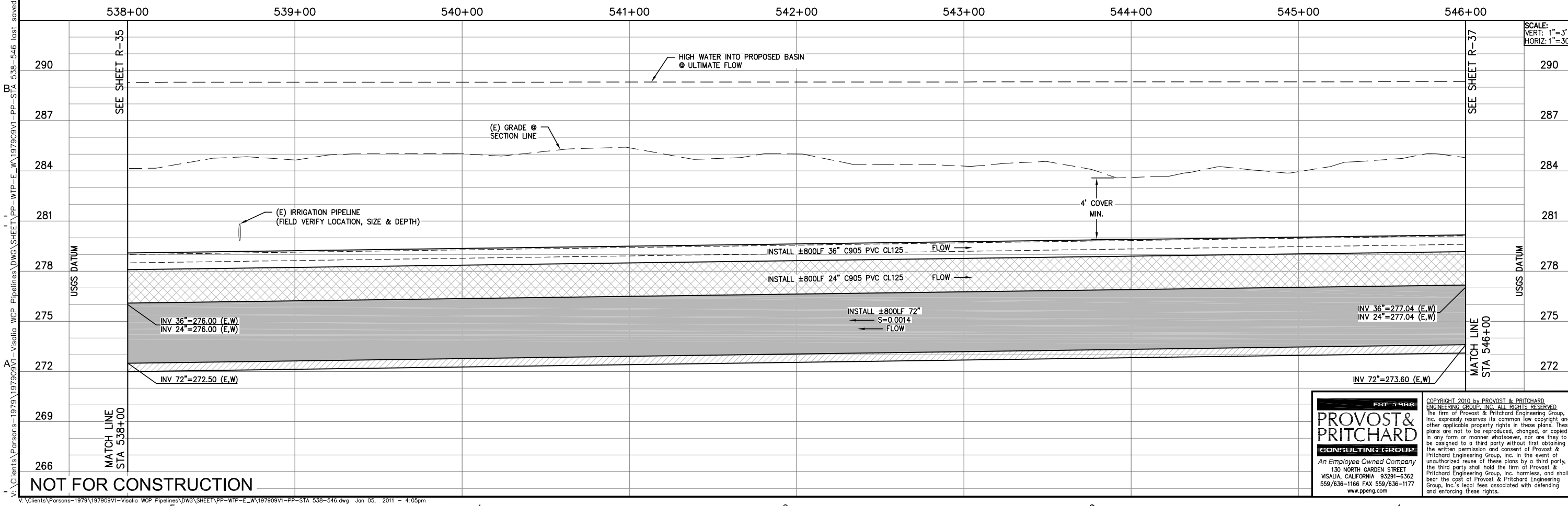


NOT FOR CONSTRUCTION

| REV. | DATE | BY | DESCRIPTION |
|---|---|---|---|
| | | | |

APPROVED BY: _____ R.C.E. 047982
ENGINEERING SERVICES MANAGER FOR CITY ENGINEER
DATE: _____

APPROVED BY: _____ R.C.E. 047982
ENGINEERING SERVICES MANAGER FOR CITY ENGINEER
DATE: _____


CITY OF VISALIA
ENGINEERING DEPARTMENT
336 NORTH BEN MADDOX WAY
VISALIA CA. 93292



PARSONS
100 WEST WALNUT STREET
PASADENA, CA 91124
OFFICE: 626.440.2000
FAX: 626.440.2630
WWW.PARSONS.COM


PROJECT NAME: CITY OF VISALIA
WATER CONSERVATION PLANT UPGRADES

SHEET TITLE: RECYCLED WATER PIPELINE
WCP EAST WEST PIPELINE
STA 538-546


EST. 1968
PROVOST & PRITCHARD
CONSULTING GROUP
An Employee Owned Company
130 NORTH GARDEN STREET
VISALIA, CALIFORNIA 93291-6362
559/636-1166 FAX 559/636-1177
www.ppeng.com



COPYRIGHT 2010 by PROVOST & PRITCHARD ENGINEERING GROUP, INC. ALL RIGHTS RESERVED
The firm of Provost & Pritchard Engineering Group, Inc. expressly reserves its common law copyright and other applicable property rights in these plans. These plans are not to be reproduced, changed, or copied in any form or manner whatsoever, nor are they to be assigned to a third party without first obtaining the written permission and consent of Provost & Pritchard Engineering Group, Inc. In the event of unauthorized reuse of these plans by a third party, the third party shall hold the firm of Provost & Pritchard Engineering Group, Inc. harmless, and shall bear the cost of Provost & Pritchard Engineering Group, Inc.'s legal fees associated with defending and enforcing these rights.


| | |
|---|---|
| ISSUE DATE: | 12-6-2010 |
| CHECKED BY: | |
| DESIGNED BY: | |
| DRAWN BY: | P&P |
| SCALE: | AS NOTED |
| DWG. NO.: | R-36 |
| SHEET | OF |


d by MICHAELB on 1/5/11 plotted 4/7/2010 8:06:44 AM
V:\Clients\Parsons-1979\197909V1-Visalia WCP Pipelines\DWG\SHEET\PP-WTP-E_W\197909V1-PP-STA 538-546 last saved by MICHAELB on 1/5/11 plotted 4/7/2010 8:06:44 AM
V:\Clients\Parsons-1979\197909V1-Visalia WCP Pipelines\DWG\SHEET\PP-WTP-E_W\197909V1-PP-STA 538-546.dwg Jan 05, 2011 - 4:05pm

Know what's **below.** **Call** before you dig.

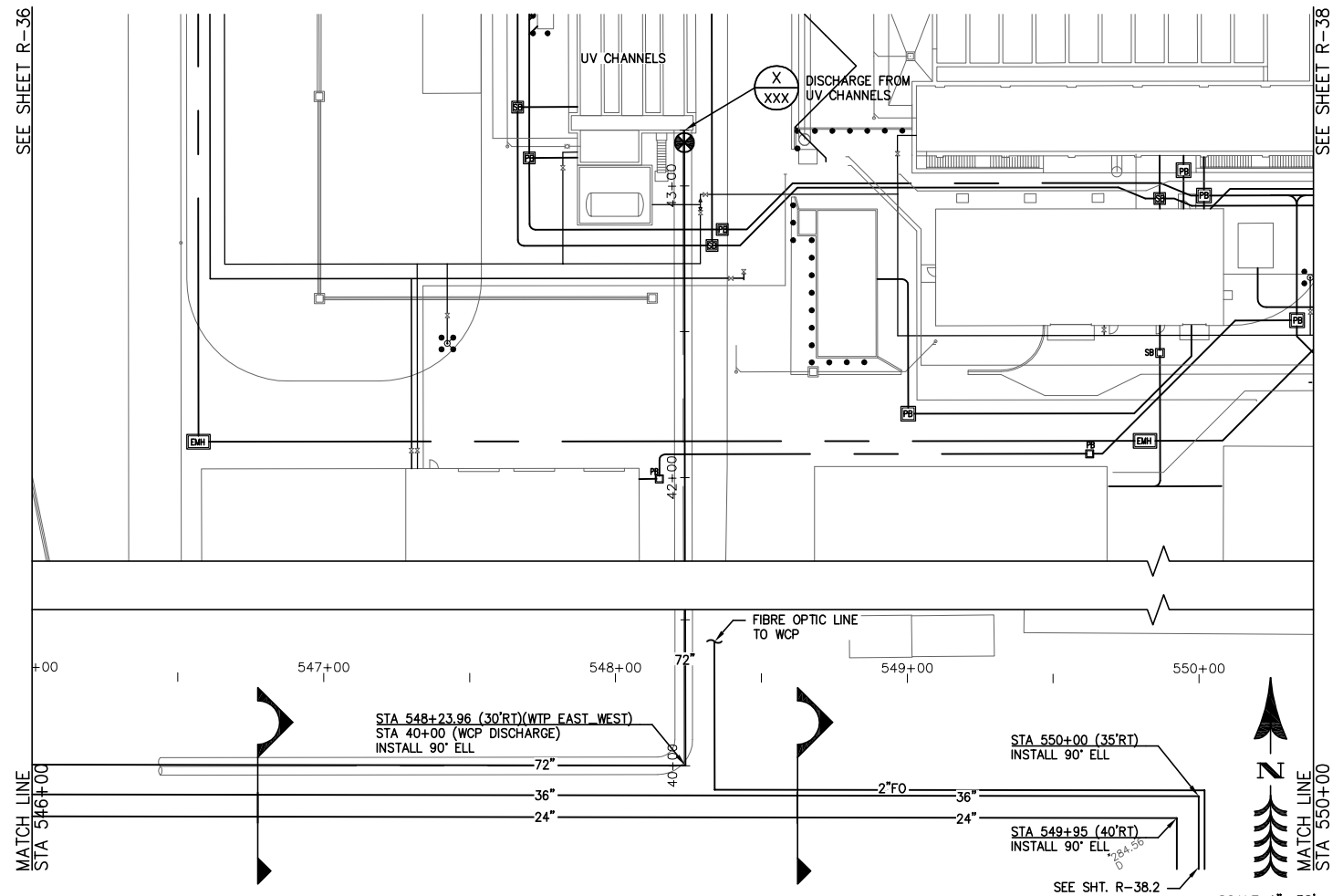


# WTP EAST WEST PIPELINE

(STATIONING IS ALONG SECTION LINE)

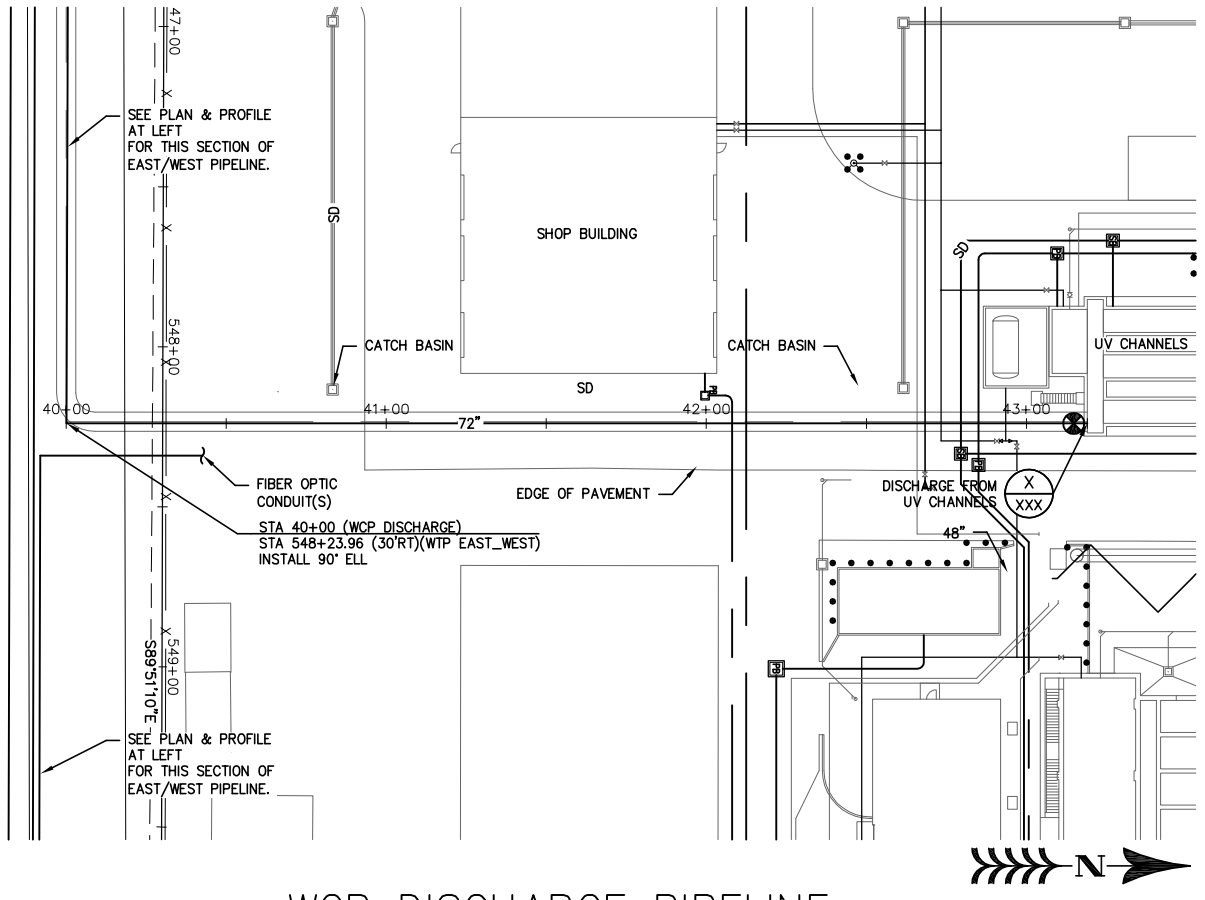


# WCP DISCHARGE PIPELINE

(STATIONING IS ALONG CENTERLINE OF PIPE)

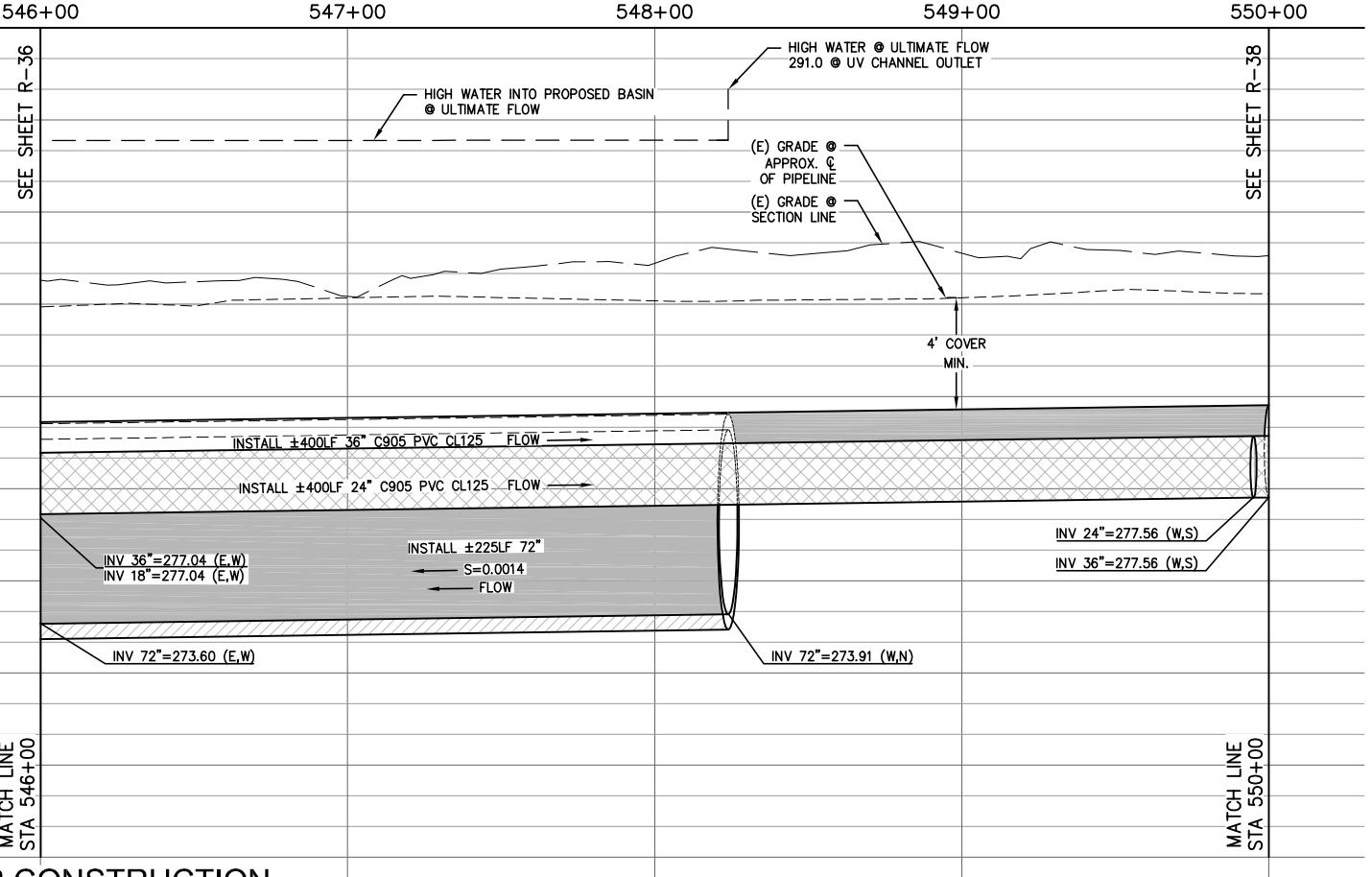

NOT FOR CONSTRUCTION

| REV. | DATE | BY | DESCRIPTION |
|---|---|---|---|
| | | | |

APPROVED BY: _____ R.C.E. 047982
ENGINEERING SERVICES MANAGER FOR CITY ENGINEER
DATE: _____

APPROVED BY: _____ R.C.E. 047982
ENGINEERING SERVICES MANAGER FOR CITY ENGINEER
DATE: _____

CITY OF VISALIA
ENGINEERING DIVISION
336 NORTH BEN MADDOX WAY
VISALIA CA. 93292

PARSONS
100 WEST WALNUT STREET
PASADENA, CA 91124
OFFICE: 626.440.2000
FAX: 626.440.2630
WWW.PARSONS.COM

PROJECT NAME:
CITY OF VISALIA
WATER CONSERVATION PLANT UPGRADES

SHEET TITLE:
RECYCLED WATER PIPELINE
WCP EAST WEST PIPELINE
STA 546-550

EST. 1968
PROVOST& PRITCHARD
CONSULTING GROUP
*An Employee Owned Company*
130 NORTH GARDEN STREET
VISALIA, CALIFORNIA 93291-6362
559/636-1166 FAX 559/636-1177
www.ppeng.com

COPYRIGHT 2010 by PROVOST & PRITCHARD ENGINEERING GROUP, INC. ALL RIGHTS RESERVED
The firm of Provost & Pritchard Engineering Group, Inc. expressly reserves its common law copyright and other applicable property rights in these plans. These plans are not to be reproduced, changed, or copied in any form or manner whatsoever, nor are they to be assigned to a third party without first obtaining the written permission and consent of Provost & Pritchard Engineering Group, Inc. In the event of unauthorized reuse of these plans by a third party, the third party shall hold the firm of Provost & Pritchard Engineering Group, Inc. harmless, and shall bear the cost of Provost & Pritchard Engineering Group, Inc.'s legal fees associated with defending and enforcing these rights.

| | |
|---|---|
| ISSUE DATE: | 12-6-2010 |
| CHECKED BY: | |
| DESIGNED BY: | |
| DRAWN BY: | P&P |
| SCALE: | AS NOTED |
| DWG. NO.: | R-37 |
| SHEET | OF |

V:\Clients\Parsons-1979\197909V1-Visalia WCP Pipelines\DWG\SHEET\PP-WTP-E_W\197909V1-PP-STA 546-550.dwg Jan 05, 2011 - 4:05pm
V:\Clients\Parsons-1979\197909V1-Visalia WCP Pipelines\DWG\SHEET\PP-WTP-E_W\197909V1-PP-STA 546-550 last saved by MICHAELB on 1/4/11 plotted 4/7/2010 9:44:04 AM

Know what's **below.**
**Call** before you dig.

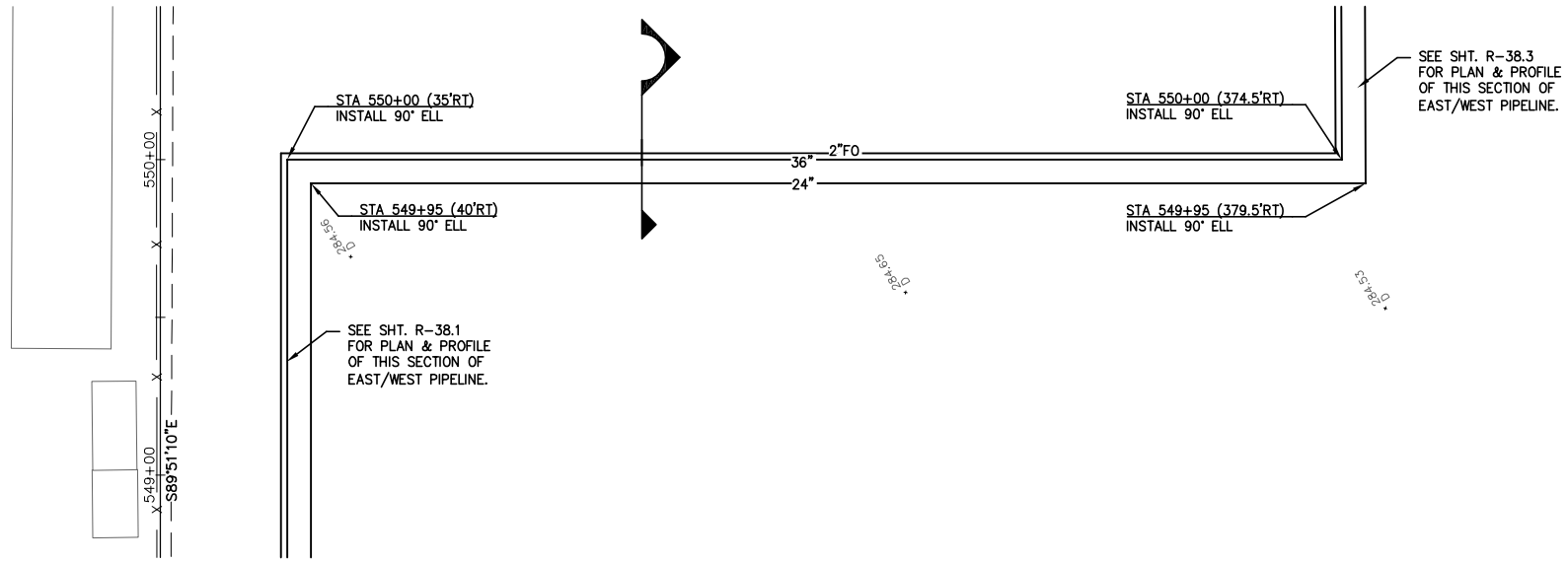


# WTP EAST WEST PIPELINE

(STATIONING IS ALONG SECTION LINE)

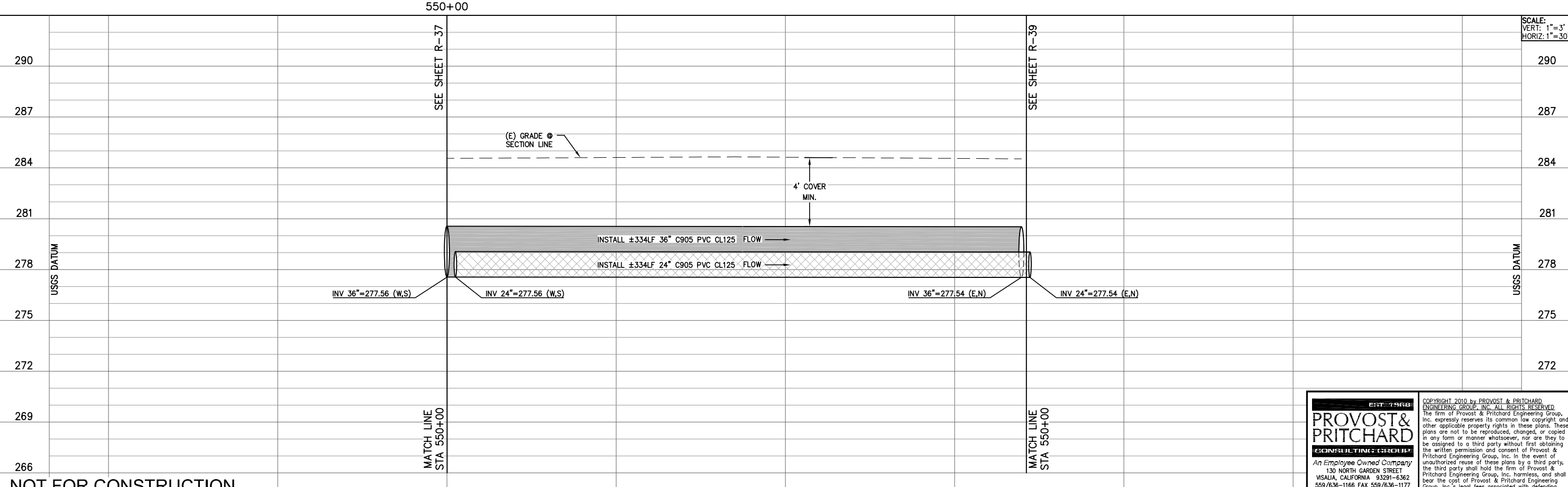


NOT FOR CONSTRUCTION

N

SCALE: 1"=30'
30' 0' 30'

SCALE:
VERT: 1"=3'
HORIZ: 1"=30'

| REV. | DATE | BY | DESCRIPTION |
|---|---|---|---|
| | | | |

APPROVED BY: R.C.E. 047282
ENGINEERING SERVICES MANAGER FOR CITY ENGINEER
DATE:

APPROVED BY: R.C.E. 047282
ENGINEERING SERVICES MANAGER FOR CITY ENGINEER
DATE:


CITY OF VISALIA
ENGINEERING DEPARTMENT
ADMINISTRATION DIVISION
336 NORTH BEN MADDOX WAY
VISALIA CA. 93292

PARSONS
100 WEST WALNUT STREET
PASADENA, CA 91124
OFFICE: 626.440.2000
FAX: 626.440.6577
WWW.PARSONS.COM

EST. 1968
PROVOST& PRITCHARD
CONSULTING GROUP
An Employee Owned Company
130 NORTH GARDEN STREET
VISALIA, CALIFORNIA 93291-6362
559/636-1166 FAX 559/636-1177
www.ppeng.com



COPYRIGHT 2010 by PROVOST & PRITCHARD ENGINEERING GROUP, INC. ALL RIGHTS RESERVED
The firm of Provost & Pritchard Engineering Group, Inc. expressly reserves its common law copyright and other applicable property rights in these plans. These plans are not to be reproduced, changed, or copied in any form or manner whatsoever, nor are they to be assigned to a third party without first obtaining the written permission and consent of Provost & Pritchard Engineering Group, Inc. In the event of unauthorized reuse of these plans by a third party, the third party shall hold the firm of Provost & Pritchard Engineering Group, Inc. harmless, and shall bear the cost of Provost & Pritchard Engineering Group, Inc.'s legal fees associated with defending and enforcing these rights.


PROJECT NAME: CITY OF VISALIA
WATER CONSERVATION PLANT UPGRADES

SHEET TITLE: RECYCLED WATER PIPELINE
WCP EAST WEST PIPELINE
STA 550

| | |
|---|---|
| ISSUE DATE: | 12-6-2010 |
| CHECKED BY: | |
| DESIGNED BY: | |
| DRAWN BY: | P&P |
| SCALE: | AS NOTED |
| DWG. NO.: | R-38 |
| SHEET | OF |


Saved by MICHAELB on 1/5/11 plotted 8/12/2010 12:46:50 PM
V:\Clients\Parsons-1979\197909V1-Visalia WCP Pipelines\DWG\SHEET\PP-WTP-E_W\197909V1-PP-STA 550-550 last saved by MICHAELB on 1/5/11 plotted 8/12/2010 12:46:50 PM
V:\Clients\Parsons-1979\197909V1-Visalia WCP Pipelines\DWG\SHEET\PP-WTP-E_W\197909V1-PP-STA 550-550.dwg Jan 05, 2011 - 4:06pm

Know what's **below.** **Call** before you dig.

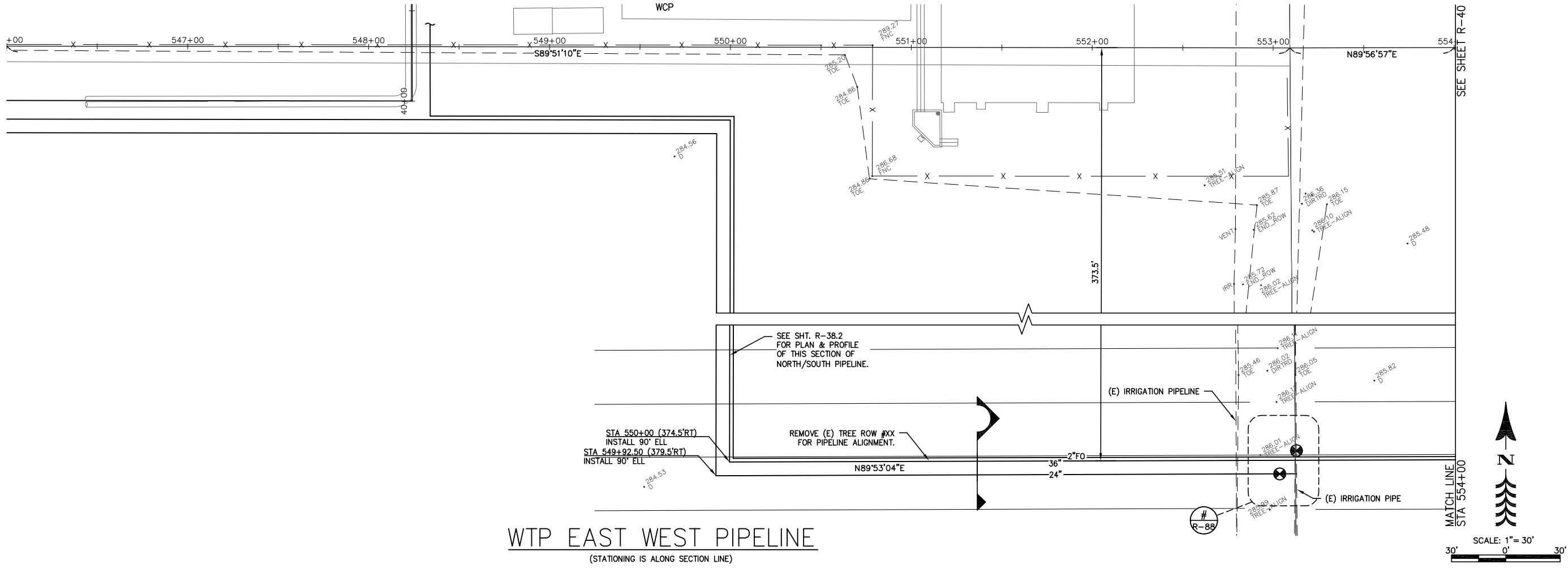


# WTP EAST WEST PIPELINE

(STATIONING IS ALONG SECTION LINE)

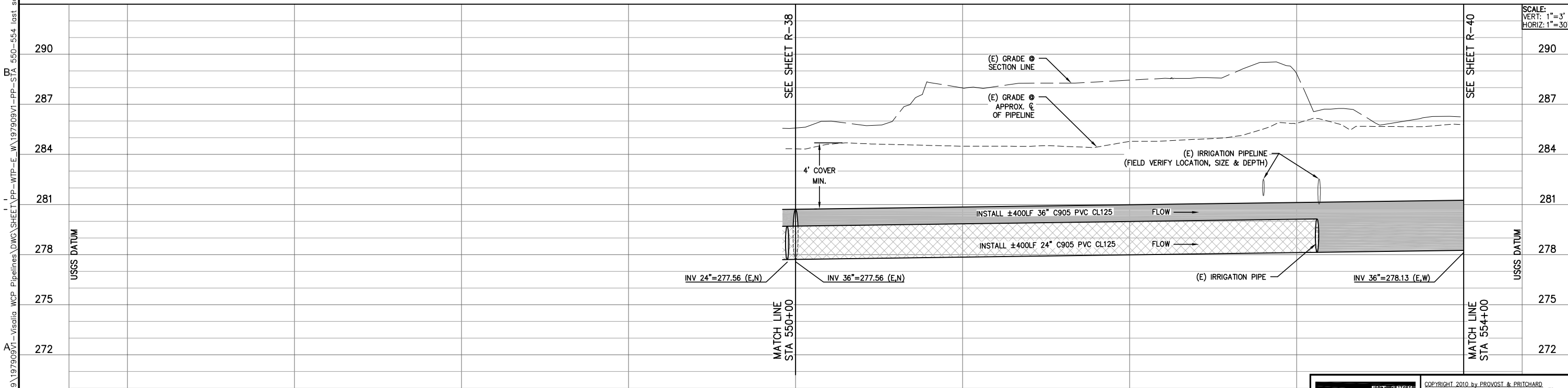


NOT FOR CONSTRUCTION

| REV. | DATE | BY | DESCRIPTION |
|---|---|---|---|
| | | | |

APPROVED BY: _____ R.C.E. 047282
ENGINEERING SERVICES MANAGER FOR CITY ENGINEER
DATE: _____

APPROVED BY: _____ R.C.E. 047282
ENGINEERING SERVICES MANAGER FOR CITY ENGINEER
DATE: _____

CITY OF VISALIA
ENGINEERING DEPARTMENT
336 NORTH BEN MADDOX WAY
VISALIA CA. 93292

PARSONS
100 WEST WALNUT STREET
PASADENA, CA 91124
OFFICE: 626.440.2000
FAX: 626.440.4037
WWW.PARSONS.COM

PROJECT NAME: CITY OF VISALIA
WATER CONSERVATION PLANT UPGRADES

SHEET TITLE: RECYCLED WATER PIPELINE
WCP EAST WEST PIPELINE
STA 550-554

EST. 1968
PROVOST & PRITCHARD
CONSULTING GROUP
An Employee Owned Company
130 NORTH GARDEN STREET
VISALIA, CALIFORNIA 93291-6362
559/636-1166 FAX 559/636-1177
www.ppeng.com

COPYRIGHT 2010 by PROVOST & PRITCHARD ENGINEERING GROUP, INC. ALL RIGHTS RESERVED
The firm of Provost & Pritchard Engineering Group, Inc. expressly reserves its common law copyright and other applicable property rights in these plans. These plans are not to be reproduced, changed, or copied in any form or manner whatsoever, nor are they to be assigned to a third party without first obtaining the written permission and consent of Provost & Pritchard Engineering Group, Inc. In the event of unauthorized reuse of these plans by a third party, the third party shall hold the firm of Provost & Pritchard Engineering Group, Inc. harmless, and shall bear the cost of Provost & Pritchard Engineering Group, Inc.'s legal fees associated with defending and enforcing these rights.

| | |
|---|---|
| ISSUE DATE: | 12-6-2010 |
| CHECKED BY: | |
| DESIGNED BY: | |
| DRAWN BY: | P&P |
| SCALE: | AS NOTED |
| DWG. NO.: | R-39 |
| SHEET | OF |

Saved by MICHAELB on 1/5/11 plotted 8/12/2010 12:46:48 PM
V:\Clients\Parsons-1979\197909V1-Visalia WCP Pipelines\DWG\SHEET\PP-WTP-E_W\197909V1-PP-STA 550-554 last saved by MICHAELB on 1/5/11 plotted 8/12/2010 12:46:48 PM
V:\Clients\Parsons-1979\197909V1-Visalia WCP Pipelines\DWG\SHEET\PP-WTP-E_W\197909V1-PP-STA 550-554.dwg Jan 05, 2011 - 4:06pm

Know what's **below.** **Call** before you dig.

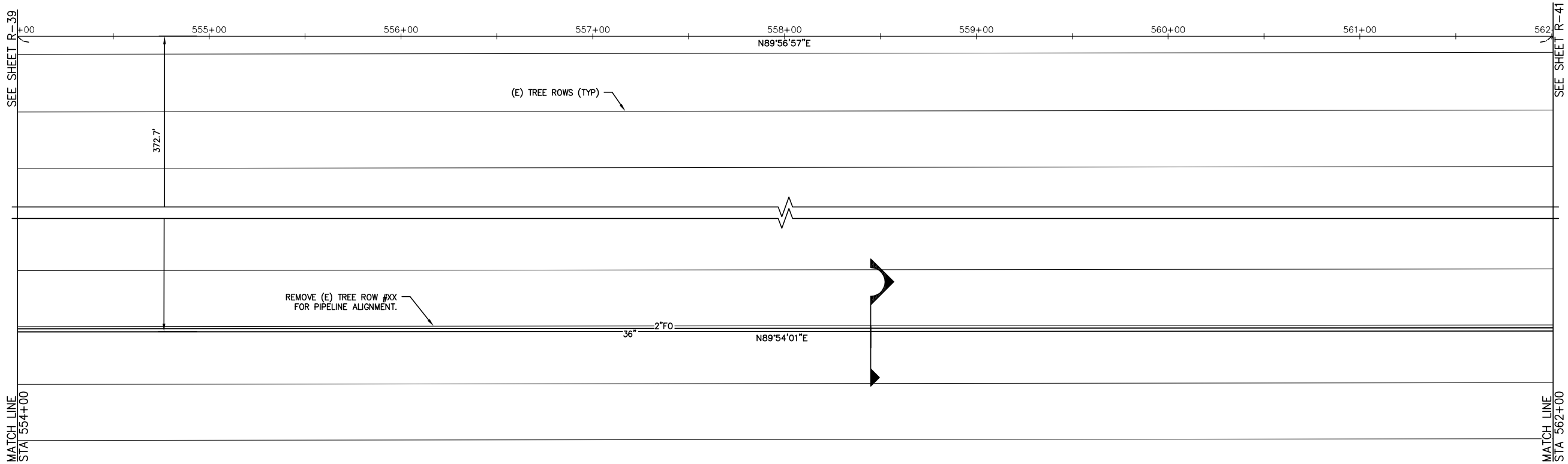


# WTP EAST WEST PIPELINE

(STATIONING IS ALONG SECTION LINE)

SCALE: 1"= 30'

30' 0' 30'

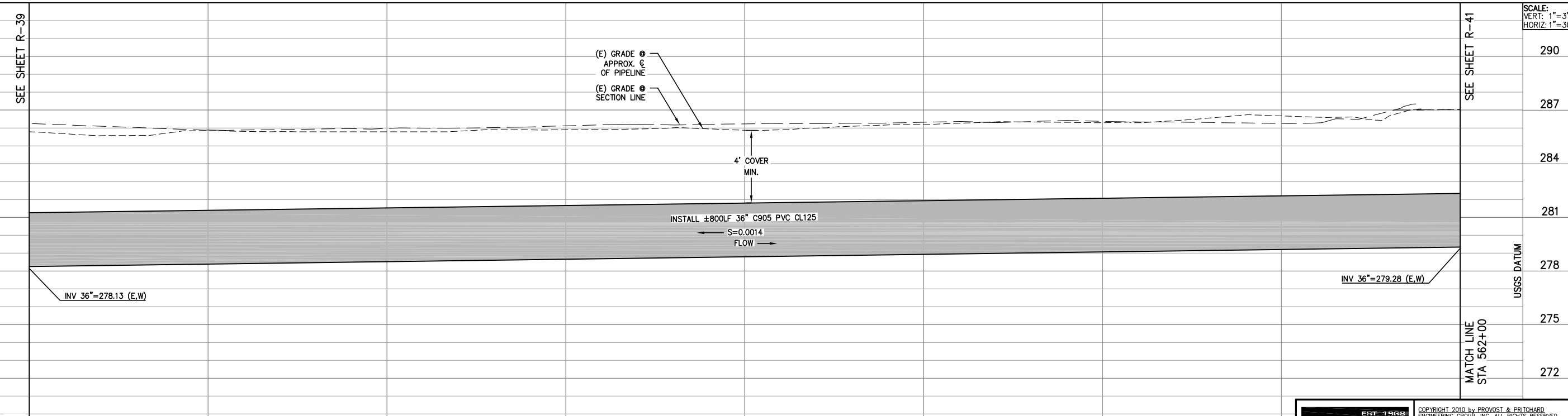


NOT FOR CONSTRUCTION

| REV. | DATE | BY | DESCRIPTION |
|---|---|---|---|
| | | | |

APPROVED BY:
ENGINEERING SERVICES MANAGER FOR CITY ENGINEER
R.C.E. 047262
DATE:

APPROVED BY:
ENGINEERING SERVICES MANAGER FOR CITY ENGINEER
R.C.E. 047262
DATE:


CITY OF VISALIA
ENGINEERING DEPARTMENT
336 NORTH BEN MADDOX WAY
VISALIA CA. 93292

PARSONS
100 WEST WALNUT STREET
PASADENA, CA 91124
OFFICE: 626.440.2000
FAX: 626.440.6311
WWW.PARSONS.COM


PROJECT NAME: CITY OF VISALIA
WATER CONSERVATION PLANT UPGRADES

SHEET TITLE: RECYCLED WATER PIPELINE
WCP EAST WEST PIPELINE
STA 554-562


EST. 1968
PROVOST & PRITCHARD
CONSULTING GROUP
An Employee Owned Company
130 NORTH GARDEN STREET
VISALIA, CALIFORNIA 93291-6362
559/636-1166 FAX 559/636-1177
www.ppeng.com



COPYRIGHT 2010 by PROVOST & PRITCHARD ENGINEERING GROUP, INC. ALL RIGHTS RESERVED
The firm of Provost & Pritchard Engineering Group, Inc. expressly reserves its common law copyright and other applicable property rights in these plans. These plans are not to be reproduced, changed, or copied in any form or manner whatsoever, nor are they to be assigned to a third party without first obtaining the written permission and consent of Provost & Pritchard Engineering Group, Inc. In the event of unauthorized reuse of these plans by a third party, the third party shall hold the firm of Provost & Pritchard Engineering Group, Inc. harmless, and shall bear the cost of Provost & Pritchard Engineering Group, Inc.'s legal fees associated with defending and enforcing these rights.


| | |
|---|---|
| ISSUE DATE: | 12-6-2010 |
| CHECKED BY: | |
| DESIGNED BY: | |
| DRAWN BY: | P&P |
| SCALE: | AS NOTED |
| DWG. NO.: | R-40 |
| SHEET | OF |


Saved by MICHAELB on 1/5/11 plotted 4/7/2010 9:55:08 AM
V:\Clients\Parsons-1979\197909V1-Visalia WCP Pipelines\DWG\SHEET\PP-WTP-E_W\197909V1-PP-STA 554-562 last saved by MIC
V:\Clients\Parsons-1979\197909V1-Visalia WCP Pipelines\DWG\SHEET\PP-WTP-E_W\197909V1-PP-STA 554-562.dwg Jan 05, 2011 - 4:08pm

Know what's **below.** **Call** before you dig.

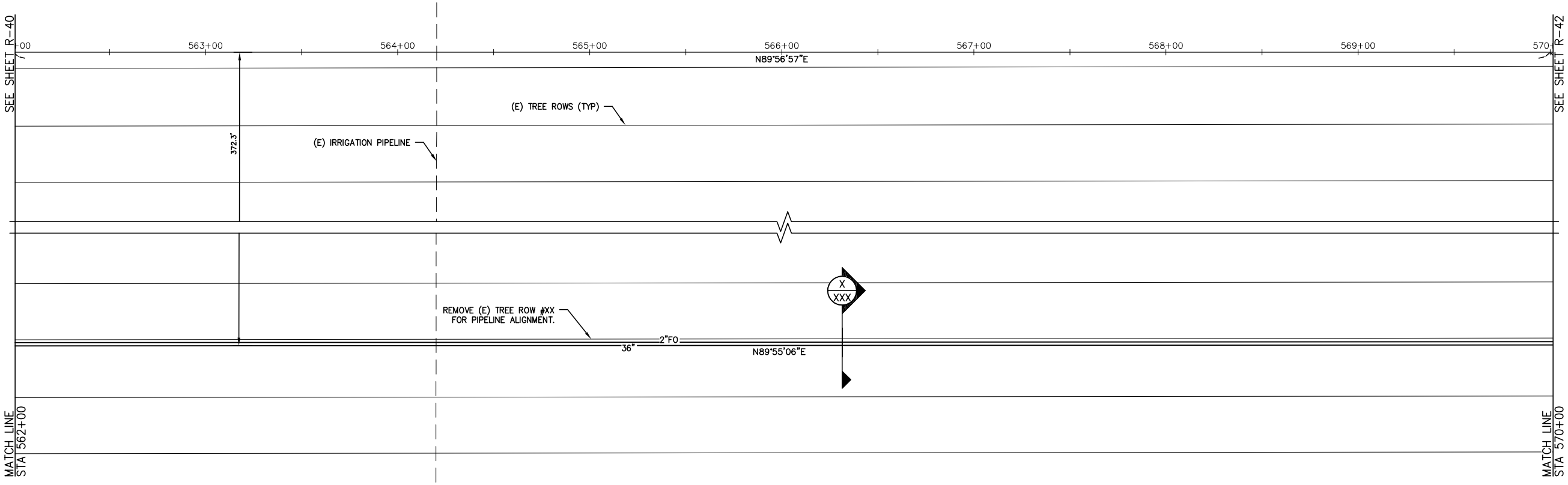


# WTP EAST WEST PIPELINE

(STATIONING IS ALONG SECTION LINE)

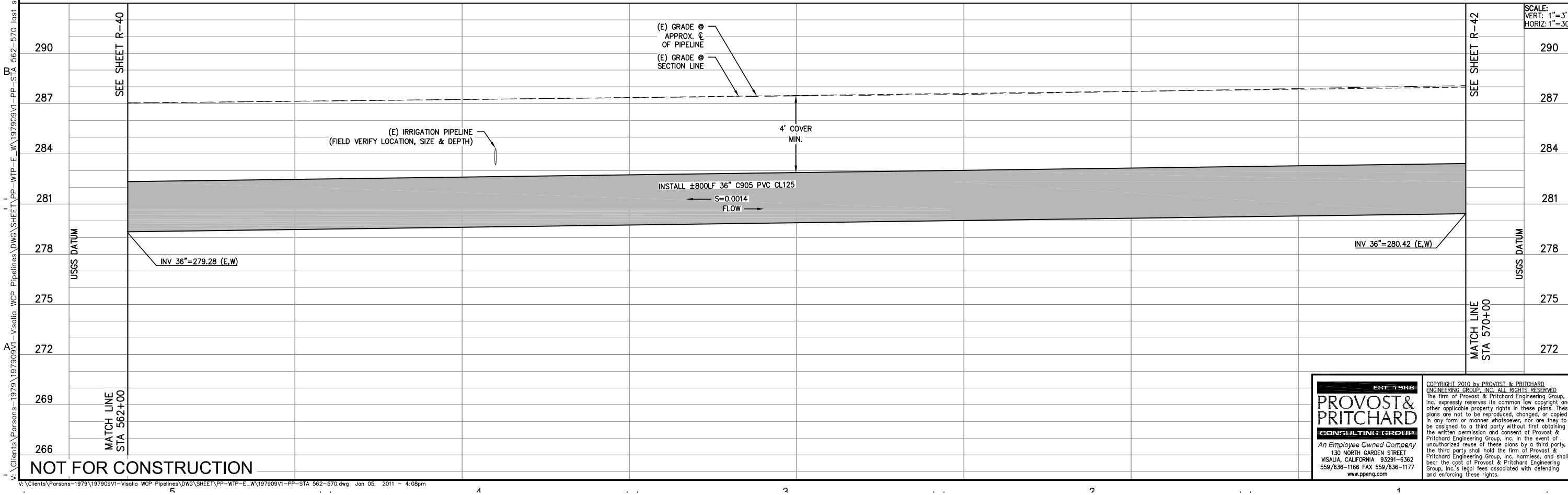


NOT FOR CONSTRUCTION

| REV. | DATE | BY | DESCRIPTION |
|---|---|---|---|
| | | | |

APPROVED BY: _____ R.C.E. 047262
ENGINEERING SERVICES MANAGER FOR CITY ENGINEER
DATE: _____

APPROVED BY: _____ R.C.E. 047262
ENGINEERING SERVICES MANAGER FOR CITY ENGINEER
DATE: _____


CITY OF VISALIA
ENGINEERING DEPARTMENT
336 NORTH BEN MADDOX WAY
VISALIA CA. 93292



PARSONS
100 WEST WALNUT STREET
PASADENA, CA 91124
OFFICE: 626.440.2000
FAX: 626.440.6577
WWW.PARSONS.COM


PROJECT NAME: CITY OF VISALIA
WATER CONSERVATION PLANT UPGRADES

SHEET TITLE: RECYCLED WATER PIPELINE
WCP EAST WEST PIPELINE
STA 562-570


EST. 1968
PROVOST & PRITCHARD
CONSULTING GROUP
An Employee Owned Company
130 NORTH GARDEN STREET
VISALIA, CALIFORNIA 93291-6362
559/636-1166 FAX 559/636-1177
www.ppeng.com



COPYRIGHT 2010 by PROVOST & PRITCHARD ENGINEERING GROUP, INC. ALL RIGHTS RESERVED
The firm of Provost & Pritchard Engineering Group, Inc. expressly reserves its common law copyright and other applicable property rights in these plans. These plans are not to be reproduced, changed, or copied in any form or manner whatsoever, nor are they to be assigned to a third party without first obtaining the written permission and consent of Provost & Pritchard Engineering Group, Inc. In the event of unauthorized reuse of these plans by a third party, the third party shall hold the firm of Provost & Pritchard Engineering Group, Inc. harmless, and shall bear the cost of Provost & Pritchard Engineering Group, Inc.'s legal fees associated with defending and enforcing these rights.


| | |
|---|---|
| ISSUE DATE: | 12-6-2010 |
| CHECKED BY: | |
| DESIGNED BY: | |
| DRAWN BY: | P&P |
| SCALE: | AS NOTED |
| DWG. NO.: | R-41 |
| SHEET | OF |


V:\Clients\Parsons-1979\197909V1-Visalia WCP Pipelines\DWG\SHEET\PP-WTP-E_W\197909V1-PP-STA 562-570 last saved by MICHAELB on 1/5/11 plotted 4/19/2010 12:39:54 PM
V:\Clients\Parsons-1979\197909V1-Visalia WCP Pipelines\DWG\SHEET\PP-WTP-E_W\197909V1-PP-STA 562-570.dwg Jan 05, 2011 - 4:08pm

Know what's **below.** **Call** before you dig.

SEE SHEET R-41

570+00 571+00 572+00 573+00 574+00 575+00 576+00 577+00 578+00

287.65 ORE

N89°56'57"E

(E) TREE ROWS (TYP)

288.00 TREE-ALIGN

288.86 TREE-ALIGN

(E) IRRIGATION PIPELINE

371.8'

288.69 TREE-ALIGN

288.54 D

REMOVE (E) TREE ROW #XX FOR PIPELINE ALIGNMENT.

288.59 TREE-ALIGN

36" 2"FO

N89°55'06"E

288.62 TREE-ALIGN

SEE SHEET R-43

MATCH LINE STA 570+00

MATCH LINE STA 578+00

N

SCALE: 1"= 30'

30' 0' 30'

# WTP EAST WEST PIPELINE

(STATIONING IS ALONG SECTION LINE)

570+00 571+00 572+00 573+00 574+00 575+00 576+00 577+00 578+00

SEE SHEET R-41

(E) GRADE @ APPROX. ℄ OF PIPELINE

(E) GRADE @ SECTION LINE

290 287 284 281 278 275 272 269 266

USGS DATUM

4' COVER MIN.

(E) IRRIGATION PIPELINE (FIELD VERIFY LOCATION, SIZE & DEPTH)

INSTALL ±800LF 36" C905 PVC CL125

S=0.0014

FLOW

INV 36"=280.42 (E,W)

INV 36"=281.56 (E,W)

SEE SHEET R-43

USGS DATUM

MATCH LINE STA 570+00

MATCH LINE STA 578+00

SCALE: VERT: 1"=3' HORIZ: 1"=30'

NOT FOR CONSTRUCTION

| REV. | DATE | BY | DESCRIPTION |
|---|---|---|---|

APPROVED BY: R.C.E. 047282
ENGINEERING SERVICES MANAGER FOR CITY ENGINEER
DATE:

APPROVED BY: R.C.E. 047282
ENGINEERING SERVICES MANAGER FOR CITY ENGINEER
DATE:

CITY OF VISALIA
ENGINEERING DEPARTMENT
336 NORTH BEN MADDOX WAY
VISALIA CA. 93292

PARSONS
100 WEST WALNUT STREET
PASADENA, CA 91124
OFFICE: 626.440.2000
FAX: 626.440.2630
WWW.PARSONS.COM

PROJECT NAME: CITY OF VISALIA
WATER CONSERVATION PLANT UPGRADES

SHEET TITLE: RECYCLED WATER PIPELINE
WCP EAST WEST PIPELINE
STA 570-578

EST. 1968
PROVOST& PRITCHARD
CONSULTING GROUP
An Employee Owned Company
130 NORTH GARDEN STREET
VISALIA, CALIFORNIA 93291-6362
559/636-1166 FAX 559/636-1177
www.ppeng.com

COPYRIGHT 2010 by PROVOST & PRITCHARD ENGINEERING GROUP, INC. ALL RIGHTS RESERVED
The firm of Provost & Pritchard Engineering Group, Inc. expressly reserves its common law copyright and other applicable property rights in these plans. These plans are not to be reproduced, changed, or copied in any form or manner whatsoever, nor are they to be assigned to a third party without first obtaining the written permission and consent of Provost & Pritchard Engineering Group, Inc. In the event of unauthorized reuse of these plans by a third party, the third party shall hold the firm of Provost & Pritchard Engineering Group, Inc. harmless, and shall bear the cost of Provost & Pritchard Engineering Group, Inc.'s legal fees associated with defending and enforcing these rights.

| | |
|---|---|
| ISSUE DATE: | 12-6-2010 |
| CHECKED BY: | |
| DESIGNED BY: | |
| DRAWN BY: | P&P |
| SCALE: | AS NOTED |
| DWG. NO.: | R-42 |
| SHEET | OF |

V:\Clients\Parsons-1979\197909V1-Visalia WCP Pipelines\DWG\SHEET\PP-WTP-E_W\197909V1-PP-STA 570-578.dwg last saved by MICHAELB on 1/5/11 plotted 4/19/2010 12:39:54 PM
V:\Clients\Parsons-1979\197909V1-Visalia WCP Pipelines\DWG\SHEET\PP-WTP-E_W\197909V1-PP-STA 570-578.dwg Jan 05, 2011 - 4:09pm

811 Know what's below. Call before you dig.

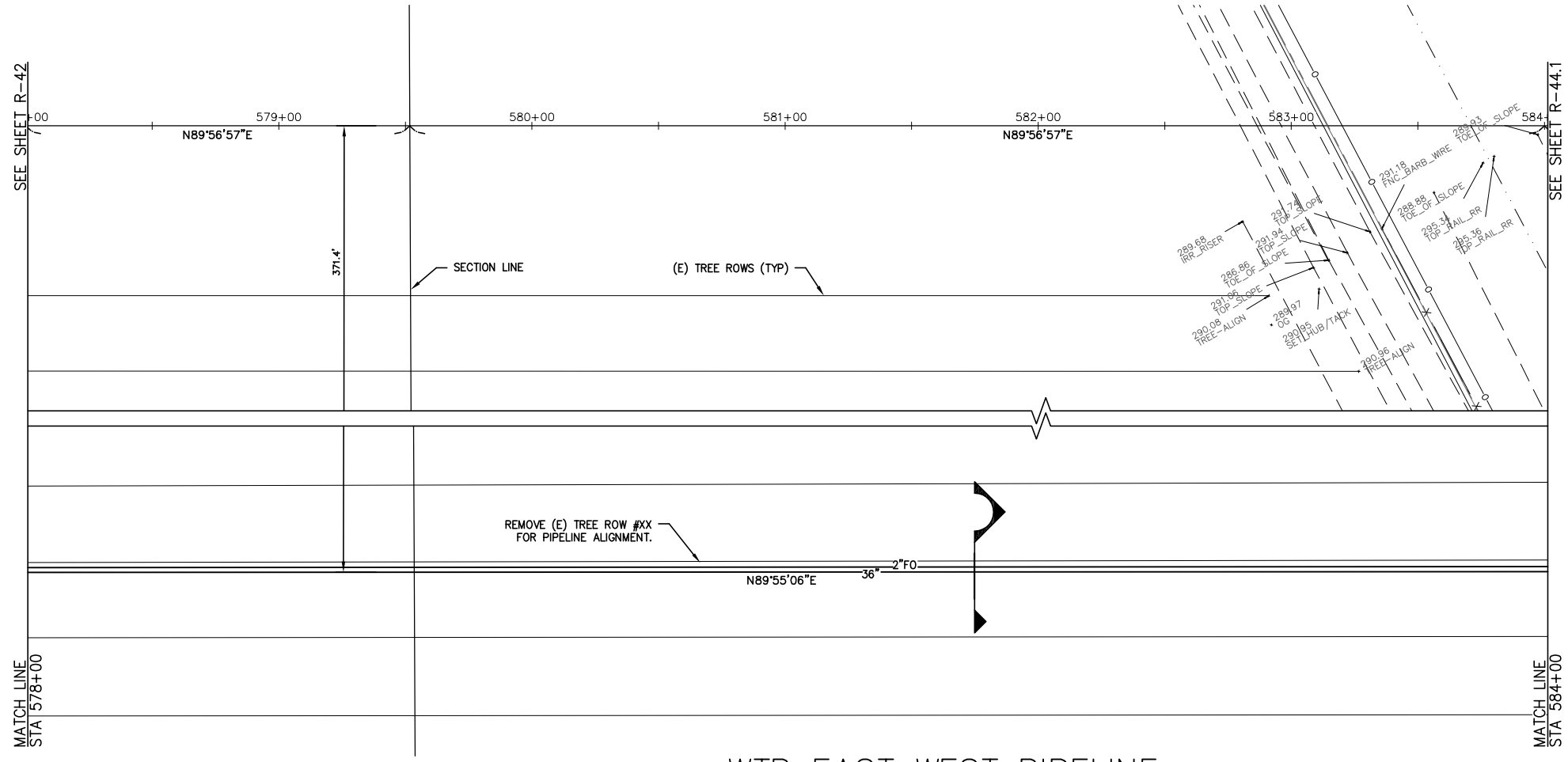


# WTP EAST WEST PIPELINE

(STATIONING IS ALONG SECTION LINE)

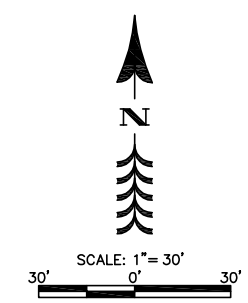


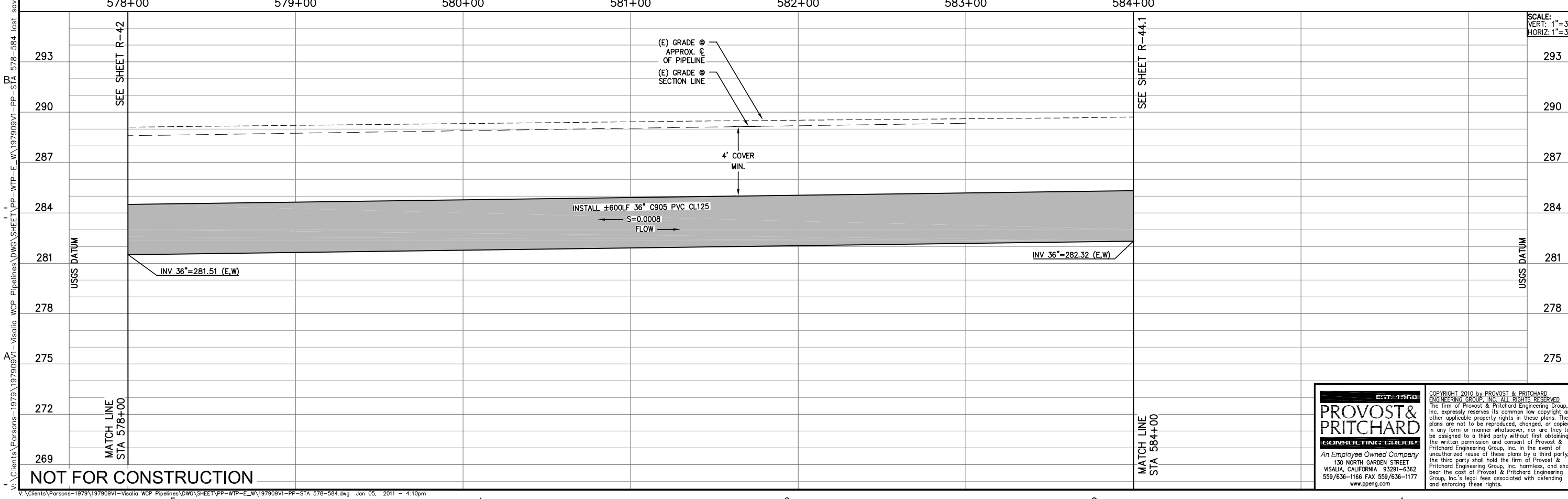


SCALE: VERT: 1"=3' HORIZ: 1"=30'

NOT FOR CONSTRUCTION

| REV. | DATE | BY | DESCRIPTION |
|---|---|---|---|

APPROVED BY: R.C.E. C47262
ENGINEERING SERVICES MANAGER FOR CITY ENGINEER
DATE:

APPROVED BY: R.C.E. C47262
ENGINEERING SERVICES MANAGER FOR CITY ENGINEER
DATE:

CITY OF VISALIA
PUBLIC WORKS DEPARTMENT
336 NORTH BEN MADDOX WAY
VISALIA CA. 93292

PARSONS
100 WEST WALNUT STREET
PASADENA, CA 91124
OFFICE: 626.440.2000
FAX: 626.440.6337
WWW.PARSONS.COM

PROJECT NAME: CITY OF VISALIA
WATER CONSERVATION PLANT UPGRADES

SHEET TITLE: RECYCLED WATER PIPELINE
WCP EAST WEST PIPELINE
STA 578-584

EST. 1968
PROVOST & PRITCHARD
CONSULTING GROUP
An Employee Owned Company
130 NORTH GARDEN STREET
VISALIA, CALIFORNIA 93291-6362
559/636-1166 FAX 559/636-1177
www.ppeng.com

COPYRIGHT 2010 by PROVOST & PRITCHARD ENGINEERING GROUP, INC. ALL RIGHTS RESERVED
The firm of Provost & Pritchard Engineering Group, Inc. expressly reserves its common law copyright and other applicable property rights in these plans. These plans are not to be reproduced, changed, or copied in any form or manner whatsoever, nor are they to be assigned to a third party without first obtaining the written permission and consent of Provost & Pritchard Engineering Group, Inc. In the event of unauthorized reuse of these plans by a third party, the third party shall hold the firm of Provost & Pritchard Engineering Group, Inc. harmless, and shall bear the cost of Provost & Pritchard Engineering Group, Inc.'s legal fees associated with defending and enforcing these rights.

| | |
|---|---|
| ISSUE DATE: | 12-6-2010 |
| CHECKED BY: | |
| DESIGNED BY: | |
| DRAWN BY: | P&P |
| SCALE: | AS NOTED |
| DWG. NO.: | R-43 |
| SHEET | OF |

V:\Clients\Parsons-1979\197909V1-Visalia WCP Pipelines\DWG\SHEET\PP-WTP-E_W\197909V1-PP-STA 578-584 last saved by MICHAELB on 1/5/11 plotted 4/19/2010 3:58:29 PM
V:\Clients\Parsons-1979\197909V1-Visalia WCP Pipelines\DWG\SHEET\PP-WTP-E_W\197909V1-PP-STA 578-584.dwg Jan 05, 2011 - 4:10pm

Know what's **below.** **Call** before you dig.

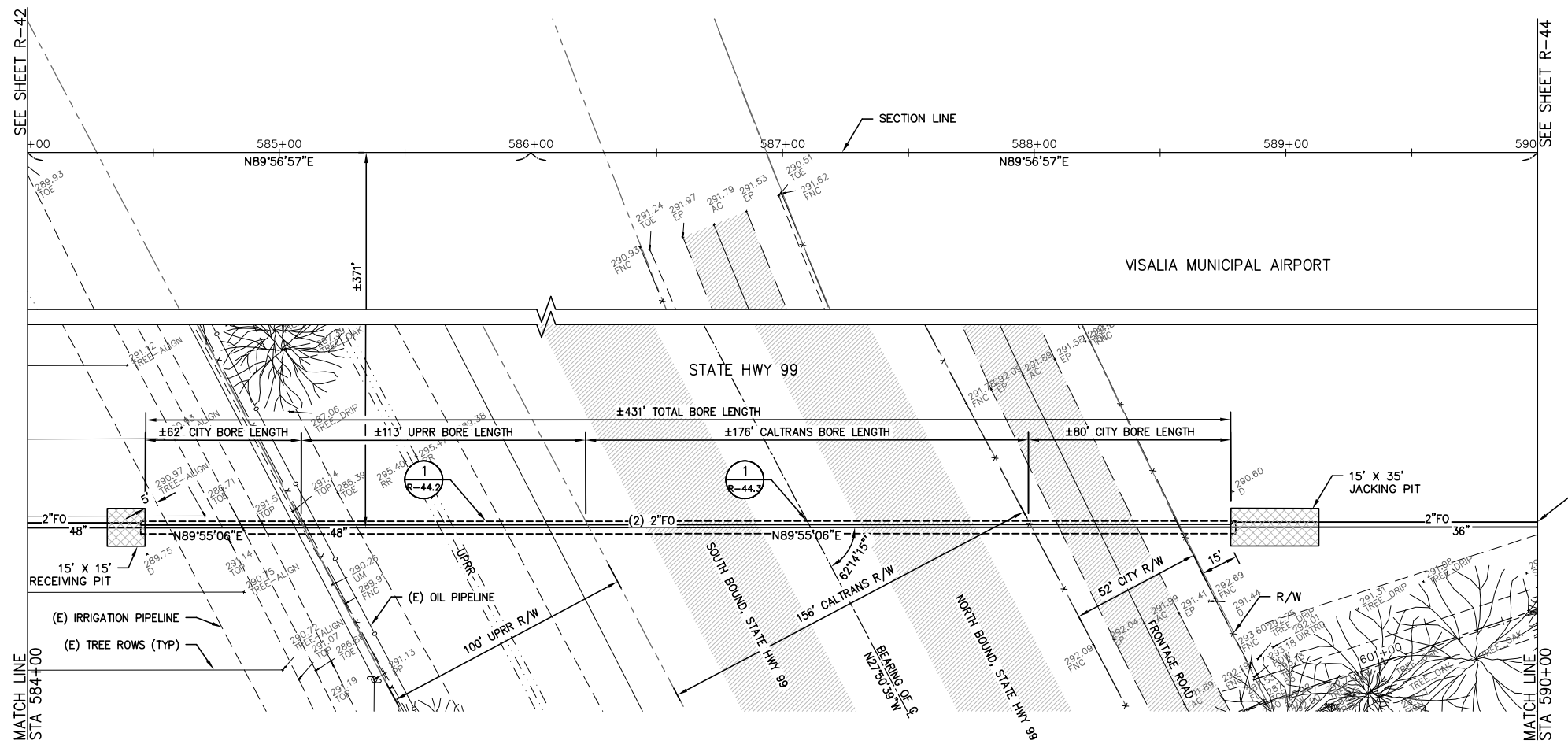


# WTP EAST WEST PIPELINE

(STATIONING IS ALONG SECTION LINE)

## NOTES

1. EXACT LOCATION AND SIZE OF JACK & RECEIVING PITS SHALL BE DETERMINED BY CONTRACTOR. PITS SHALL NOT ENCROACH INTO CALTRANS OR UPRR RIGHT OF WAYS.
2. BORE OPERATIONS MAY NOT BEGIN UNTIL CONTRACTOR HAS OBTAINED ANY AND ALL PERMITS REQUIRED BY UNION PACIFIC RAILROAD (UPRR) AND CALTRANS.
3. INSTALL (2) 2" CONDUITS FOR FIBER OPTIC LINE IN BORE & JACK CASING.
4. CONTRACTOR MAY REMOVE FENCE ALONG EAST SIDE OF DRIVE 85 TO ACCESS BORE PIT LOCATIONS. CONTRACTOR SHALL INSTALL TEMPORARY FENCE AROUND BORE PIT TIEING INTO PERMANENT FENCE ALONG EAST SIDE OF DRIVE 85. TEMPORARY FENCE SHALL BE MAINTAINED IN PLACE UNTIL PERMANENT FENCE IS REINSTALLED AFTER COMPLETION OF BORE OPERATION.

## LEGEND

- EXISTING AC
- JACKING & RECEIVING PITS

N

SCALE: 1"= 30'
30' 0' 30'

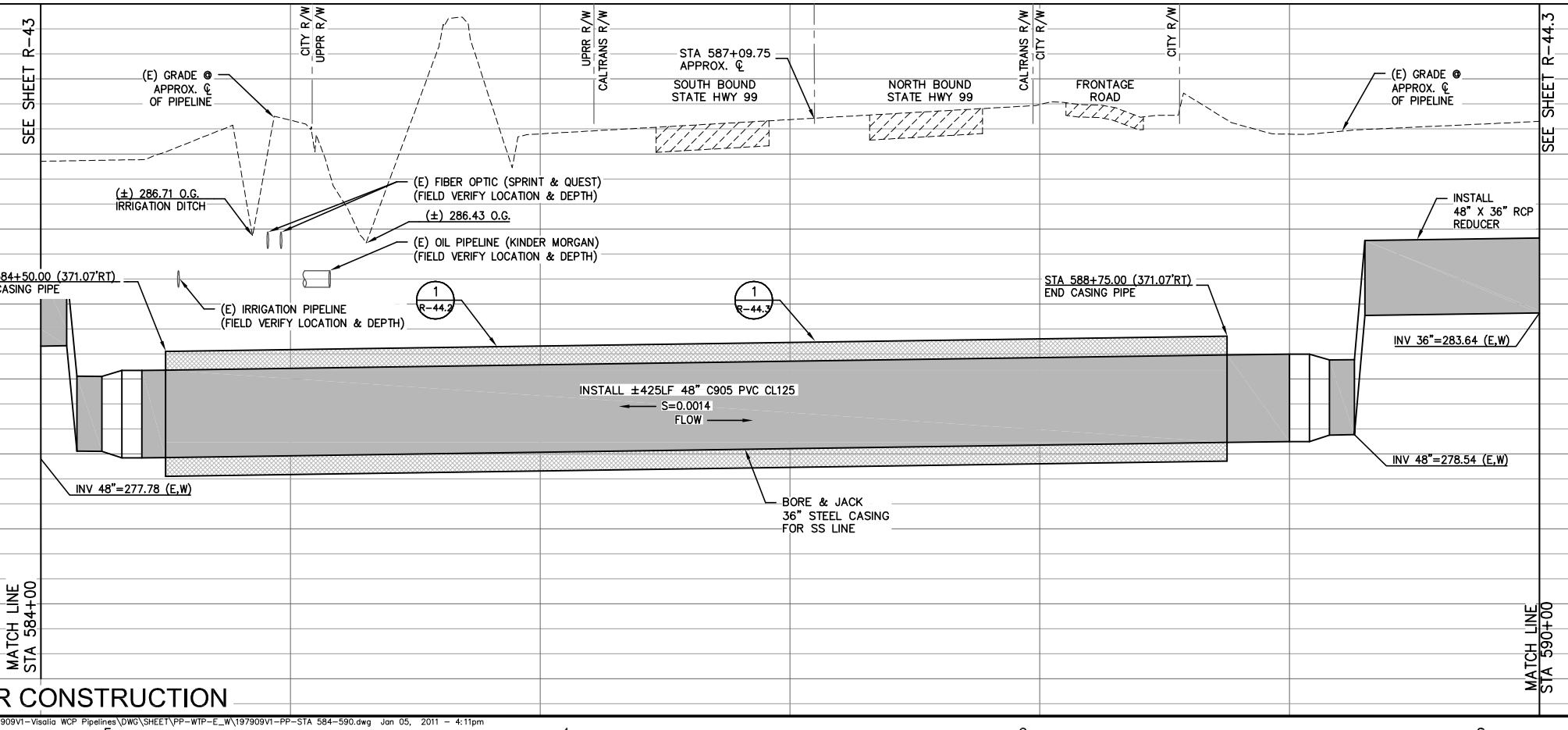


NOT FOR CONSTRUCTION

| REV. | DATE | BY | DESCRIPTION |
|---|---|---|---|
| | | | |

APPROVED BY: _____ R.C.E. 047262
ENGINEERING SERVICES MANAGER FOR CITY ENGINEER
DATE: _____

APPROVED BY: _____ R.C.E. 047262
ENGINEERING SERVICES MANAGER FOR CITY ENGINEER
DATE: _____

CITY OF VISALIA
PUBLIC WORKS DEPARTMENT
336 NORTH BEN MADDOX WAY
VISALIA CA. 93292

PARSONS
100 WEST WALNUT STREET
PASADENA, CA 91124
OFFICE: 626.440.2000
FAX: 626.440.2630
WWW.PARSONS.COM

PROJECT NAME: CITY OF VISALIA
WATER CONSERVATION PLANT UPGRADES

SHEET TITLE: RECYCLED WATER PIPELINE
WCP EAST WEST PIPELINE
STA 584-590

SCALE:
VERT: 1"=3'
HORIZ: 1"=30'

EST. 1956
PROVOST& PRITCHARD
CONSULTING GROUP
An Employee Owned Company
130 NORTH GARDEN STREET
VISALIA, CALIFORNIA 93291-6362
559/636-1166 FAX 559/636-1177
www.ppeng.com

COPYRIGHT 2010 by PROVOST & PRITCHARD ENGINEERING GROUP, INC. ALL RIGHTS RESERVED
The firm of Provost & Pritchard Engineering Group, Inc. expressly reserves its common law copyright and other applicable property rights in these plans. These plans are not to be reproduced, changed, or copied in any form or manner whatsoever, nor are they to be assigned to a third party without first obtaining the written permission and consent of Provost & Pritchard Engineering Group, Inc. In the event of unauthorized reuse of these plans by a third party, the third party shall hold the firm of Provost & Pritchard Engineering Group, Inc. harmless, and shall bear the cost of Provost & Pritchard Engineering Group, Inc.'s legal fees associated with defending and enforcing these rights.

| | |
|---|---|
| ISSUE DATE: | 12-6-2010 |
| CHECKED BY: | |
| DESIGNED BY: | |
| DRAWN BY: | P&P |
| SCALE: | AS NOTED |
| DWG. NO.: | R-44.1 |
| SHEET | OF |

Saved by MICHAELB on 1/5/11 plotted 4/20/2010 7:07:09 AM
V:\Clients\Parsons-1979\197909V1-Visalia WCP Pipelines\DWG\SHEET\PP-WTP-E_W\197909V1-PP-STA 584-590 last saved by MICHAELB on 1/5/11 plotted 4/20/2010 7:07:09 AM
V:\Clients\Parsons-1979\197909V1-Visalia WCP Pipelines\DWG\SHEET\PP-WTP-E_W\197909V1-PP-STA 584-590.dwg Jan 05, 2011 - 4:11pm

Know what's **below.**
**Call** before you dig.

## CARRIER PIPE

1. CARRIER PIPE WITHIN UPRR RIGHT OF WAY SHALL BE RUBBER GASKETED, PVC PIPE CONFORMING TO AWWA C905 WITH A PRESSURE RATING OF 125 PSI (MIN.) (DR41.) OR LINED DUCTILE IRON PIPE WITH A PRESSURE RATING OF 200.
2. CARRIER PIPE SHALL BE CENTERED WITHIN CASING BY USE OF ONE OF THESE METHODS:

WOOD SKIDS
PRESSURE TREATED #2 DF 2Xs,
#3 REDWOOD 2Xs

MANUFACTURED SPACERS
HDPE OR STEEL

CASING SPACERS AND END SEALS AS MANUFACTURED BY ONE OF THE FOLLOWING ADVANCE PRODUCTS & SYSTEMS, INC.
CCI PIPELINE SYSTEMS
PUBLIC WORKS MARKETING INC.
PIPLINE SEAL & INSULATOR, INC.
OR CALTRANS APPROVED EQUAL.

## PLACEMENT OF SPACERS WITHIN CARRIER PIPE

1. GENERAL – ONE SPACER SHALL BE PLACED NOT MORE THAN TWO FEET FROM EACH END OF CASING. SUBSEQUENT SPACERS SHALL BE PLACED AT 6'–10' INTERVALS WITHIN THE CASING, OR IN ACCORDANCE WITH PIPE MANUFACTURERS RECOMMENDATIONS.

## END SEALS

- WRAP AROUND, NEOPRENE RUBBER–MIN. THICKNESS: 1/8" TEMPERATURE RATING: –20°F TO 170°F
- STAINLESS STEEL BANDING– MIN. 2 BANDS PER SEAL T304 STAINLESS STEEL W/100% NON–MAGNETIC WORM GEAR, 1/2" MIN. WIDTH.

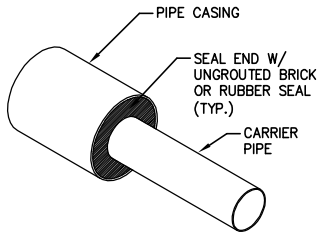


CASING END SEAL

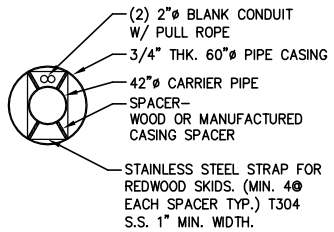


SECTION A–A

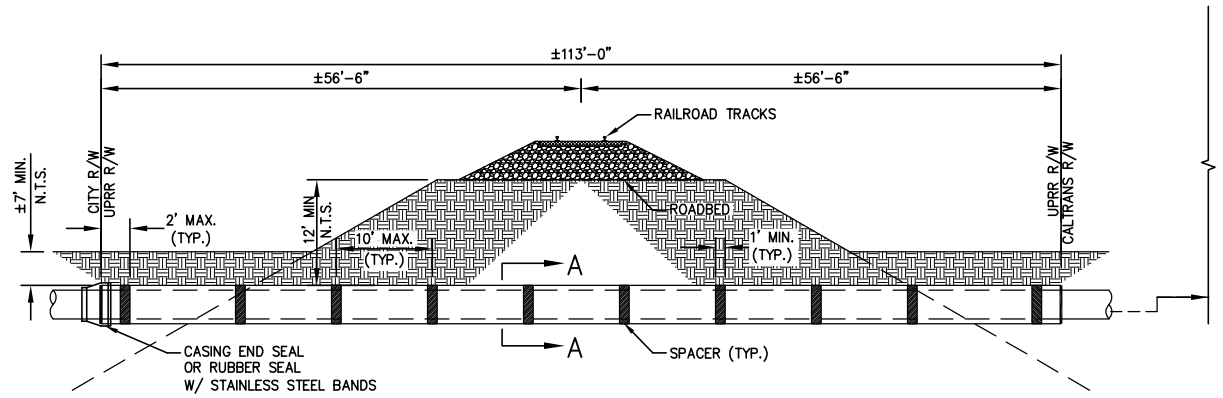


SECTION VIEW UPPR
(MEASURMENTS ALONG PIPE CENTERLINE)

SCALE IN FEET
0 5 10 20

1
R–44.2

RAILROAD JACK & BORE

## GENERAL NOTES:

1. THE CONTRACTOR SHALL OBTAIN A VALID UNION PACIFIC RAILROAD (UPRR) PERMIT FOR PIPELINE CROSSING PRIOR TO PERFORMING ANY WORK IN UPRR'S RIGHT–OF–WAY.
2. ALL WORK WITHIN UPRR RIGHT OF WAY SHALL BE IN CONFORMANCE WITH RIGHT OF ENTRY PERMIT REQUIREMENTS INCLUDING RAILROAD LIABILITY INSURANCE.
3. BORE AND RECEIVING PITS SHALL BE LOCATED 5' (MINIMUM) OUTSIDE OF UPRR RIGHT OF WAY.
4. ACCESS TO BORE AND RECEIVING PITS SHALL ONLY BE FROM THE CONSTRUCTION EASEMENTS OBTAINED BY THE CITY OF VISALIA AND NOT FROM THE STATE HIGHWAY (SR99). THE PARKING OF EQUIPMENT AND/OR OF MATERIALS SHALL NOT BE WITHIN 40' OF THE CENTERLINE OF UPRR TRACKS.
5. BORE AND RECEIVING PITS SHALL BE ADEQUATELY FENCED AND/OR HAVE A TYPE–K BARRIER PLACED AROUND THEM.
6. BORE AND RECEIVING PITS SHALL BE ADEQUATELY SHORED IN ACCORDANCE WITH CAL OSHA REQUIREMENTS.
7. SHORING PLANS, SIGNED BY A REGISTERED ENGINEER SHALL BE SUBMITTED AND APPROVED BY THE DEPARTMENT BEFORE EXCAVATING..
8. A 6' TALL CHAIN LINK FENCE SHALL BE PLACED AROUND THE PERIMETER OF THE PITS DURING NON–WORKING HOURS.
9. CASING PIPE MAY BE NEW OR USED STEEL PIPE WITH A MINIMUM YIELD STRENGTH OF 35,000 PSI. USED STEEL PIPE SHALL BE PRE–APPROVED BY CALTRANS BEFORE INSTALLATION.
10. CASING PIPE MAY BE SPIRAL WELDED PIPE PROVIDED THE PIPE IS NEW AND THE WELD IS SMOOTH.
11. ALL CASING LENGTHS SHALL BE EQUAL TO THE AUGER LENGTH.
12. ALL CASING JOINTS WELDED IN THE FIELD SHALL BE FULLY WELDED AROUND THE CIRCUMFERENCE OF THE PIPE WITH COMPLETE PENETRATION WELD.

| STEEL CASING WALL THICKNESS CHART | | |
|---|---|---|
| MINIMUM THICKNESS | | DIAMETER OF CASING PIPE |
| .2500" | 1/4" | 1/2" OR LESS |
| .3125" | 5/16" | OVER 12"–18" |
| .3750" | 3/8" | OVER 18"–22" |
| .4375" | 7/16" | OVER 22"–28" |
| .5000" | 1/2" | OVER 28"–34" |
| .5625" | 9/16" | OVER 34"–42" |
| .6250" | 5/8" | OVER 42"–48" |
| OVER 48" MUST BE APPROVED BY R.R. CO. | | |
| NOTE: THIS CHART IS ONLY FOR SMOOTH STEEL CASING PIPES WITH MINIUMN YIELD STRENGTH OF 35,000 PSI. | | |

NOT FOR CONSTRUCTION

| REV. | DATE | BY | DESCRIPTION |
|---|---|---|---|
| | | | |

APPROVED BY: _____ R.C.E. 047282
ENGINEERING SERVICES MANAGER FOR CITY ENGINEER
DATE: _____

APPROVED BY: _____ R.C.E. 047282
ENGINEERING SERVICES MANAGER FOR CITY ENGINEER
DATE: _____

CITY OF VISALIA
ENGINEERING DEPARTMENT
336 NORTH BEN MADDOX WAY
VISALIA CA. 93292

PARSONS
100 WEST WALNUT STREET
PASADENA, CA 91124
OFFICE: 626.440.2000
FAX: 626.440.4577
WWW.PARSONS.COM

PROJECT NAME: CITY OF VISALIA
WATER CONSERVATION PLANT UPGRADES

SHEET TITLE: RECYCLED WATER PIPELINE
WCP EAST WEST PIPELINE
UPRR BORE DETAIL

EST. 1968
PROVOST & PRITCHARD
CONSULTING GROUP
*An Employee Owned Company*
130 NORTH GARDEN STREET
VISALIA, CALIFORNIA 93291–6362
559/636–1166 FAX 559/636–1177
www.ppeng.com

COPYRIGHT 2010 by PROVOST & PRITCHARD ENGINEERING GROUP, INC. ALL RIGHTS RESERVED
The firm of Provost & Pritchard Engineering Group, Inc. expressly reserves its common law copyright and other applicable property rights in these plans. These plans are not to be reproduced, changed, or copied in any form or manner whatsoever, nor are they to be assigned to a third party without first obtaining the written permission and consent of Provost & Pritchard Engineering Group, Inc. In the event of unauthorized reuse of these plans by a third party, the third party shall hold the firm of Provost & Pritchard Engineering Group, Inc. harmless, and shall bear the cost of Provost & Pritchard Engineering Group, Inc.'s legal fees associated with defending and enforcing these rights.

| | |
|---|---|
| ISSUE DATE: | 12–6–2010 |
| CHECKED BY: | |
| DESIGNED BY: | |
| DRAWN BY: | P&P |
| SCALE: | AS NOTED |
| DWG. NO.: | R–44.2 |
| SHEET | OF |

last saved by MICHAELB on 1/5/11 plotted 4/20/2010 7:35:37 AM
V:\Clients\Parsons–1979\197909V1–Visalia WCP Pipelines\DWG\SHEET\PP–WTP–E_W\197909V1–PP–STA 584–590–2.dwg Jan 05, 2011 – 4:11pm

Know what's **below.**
**Call** before you dig.

## CARRIER PIPE

1. CARRIER PIPE WITHIN CALTRANS RIGHT OF WAY SHALL BE RUBBER GASKETED, PVC PIPE CONFORMING TO AWWA C905 WITH A PRESSURE RATING OF 125 PSI (MIN.) (DR41.) OR LINED DUCTILE IRON PIPE WITH A PRESSURE RATING OF 200.

2. CARRIER PIPE SHALL BE CENTERED WITHIN CASING BY USE OF ONE OF THESE METHODS:

   WOOD SKIDS
   PRESSURE TREATED #2 DF 2Xs,
   #3 REDWOOD 2Xs

   MANUFACTURED SPACERS
   HDPE OR STEEL

   CASING SPACERS AND END SEALS AS MANUFACTURED BY ONE OF THE FOLLOWING ADVANCE PRODUCTS & SYSTEMS, INC.
   CCI PIPELINE SYSTEMS
   PUBLIC WORKS MARKETING INC.
   PIPLINE SEAL & INSULATOR, INC.
   OR CALTRANS APPROVED EQUAL.

## PLACEMENT OF SPACERS WITHIN CARRIER PIPE

1. GENERAL – ONE SPACER SHALL BE PLACED NOT MORE THAN TWO FEET FROM EACH END OF CASING. SUBSEQUENT SPACERS SHALL BE PLACED AT 6'–10' INTERVALS WITHIN THE CASING, OR IN ACCORDANCE WITH PIPE MANUFACTURERS RECOMMENDATIONS.

## END SEALS

- WRAP AROUND, NEOPRENE RUBBER–MIN. THICKNESS: 1/8" TEMPERATURE RATING: –20°F TO 170°F
- STAINLESS STEEL BANDING– MIN. 2 BANDS PER SEAL T304 STAINLESS STEEL W/100% NON–MAGNETIC WORM GEAR, 1/2" MIN. WIDTH.

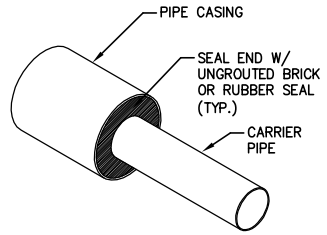


## CASING END SEAL

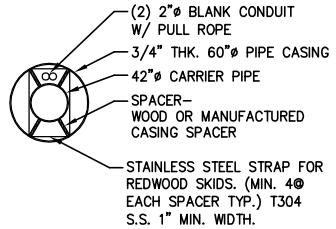


## SECTION A–A

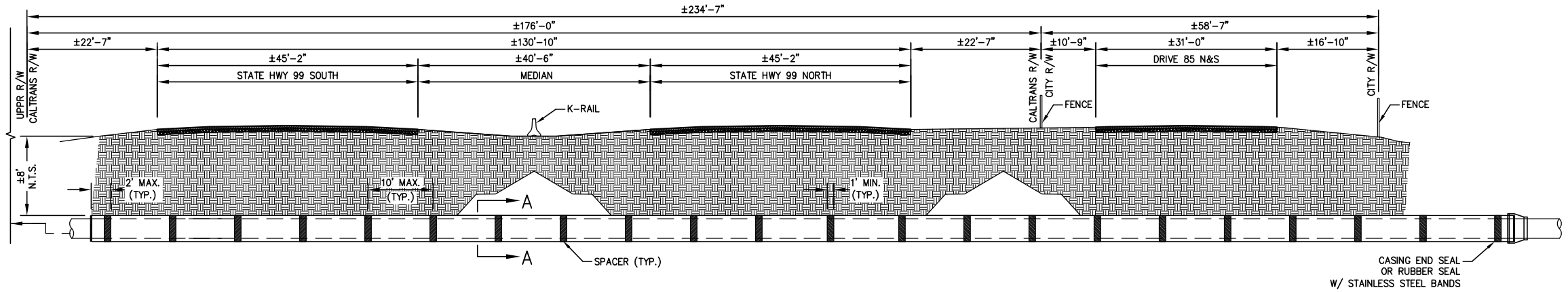


## SECTION VIEW STATE HWY 99 & DRIVE 85

(MEASURMENTS ALONG PIPE CENTERLINE)

SCALE IN FEET
0 5 10 20

1
R–44.3

## HWY 99 & DRIVE 85 JACK & BORE

### GENERAL NOTES:

1. CITY OF VISALIA HAS OBTAINED IT'S PORTION OF A CALTRANS ENCROACHMENT PERMIT. THE CONTRACTOR SHALL OBTAIN CONTRACTORS PORTION OF THE DOUBLE ENCROACHMENT PERMIT PRIOR TO PERFORMING ANY WORK IN THE STATES RIGHT OF WAY.
2. ALL WORK WITHIN STATE'S RIGHT OF WAY SHALL BE IN CONFORMANCE WITH CALTRANS ENCROACHMENT PERMIT REQUIREMENTS.
3. BORE AND RECEIVING PITS SHALL BE LOCATED 5' (MINIMUM) OUTSIDE OF CALTRANS RIGHT OF WAY.
4. THE BORE AND RECEIVING PITS ARE UNDER STATE OF CALIFORNIA JURISDICTION, REGARDLESS OF THEIR LOCATION.
5. ACCESS TO BORE AND RECEIVING PITS SHALL ONLY BE FROM THE CONSTRUCTION EASEMENTS OBTAINED BY THE CITY OF VISALIA AND NOT FROM THE STATE HIGHWAY (SR99). THE PARKING OF EQUIPMENT AND/OR OF MATERIALS SHALL NOT BE WITHIN 20' OF THE STATE OF CALIFORNIA ROADWAY LANES.
6. BORE AND RECEIVING PITS SHALL BE ADEQUATELY FENCED AND/OR HAVE A TYPE–K BARRIER PLACED AROUND THEM.
7. BORE AND RECEIVING PITS SHALL BE ADEQUATELY SHORED IN ACCORDANCE WITH CAL OSHA REQUIREMENTS.
8. SHORING PLANS, SIGNED BY A REGISTERED ENGINEER SHALL BE SUBMITTED AND APPROVED BY THE DEPARTMENT BEFORE EXCAVATING..
9. A 6' TALL CHAIN LINK FENCE SHALL BE PLACED AROUND THE PERIMETER OF THE PITS DURING NON–WORKING HOURS.
10. CASING PIPE MAY BE NEW OR USED STEEL PIPE WITH A MINIMUM YIELD STRENGTH OF 35,000 PSI. USED STEEL PIPE SHALL BE PRE–APPROVED BY CALTRANS BEFORE INSTALLATION.
11. CASING PIPE MAY BE SPIRAL WELDED PIPE PROVIDED THE PIPE IS NEW AND THE WELD IS SMOOTH.
12. ALL CASING LENGTHS SHALL BE EQUAL TO THE AUGER LENGTH.
13. ALL CASING JOINTS WELDED IN THE FIELD SHALL BE FULLY WELDED AROUND THE CIRCUMFERENCE OF THE PIPE WITH COMPLETE PENETRATION WELD.
14. THE CONTRACTOR SHALL SET AND CHECK A SURVEY GRID OVER THE CENTERLINE OF THE PIPE JACKING OPERATION.

### STEEL CASING WALL THICKNESS CHART

| MINIMUM THICKNESS | | DIAMETER OF CASING PIPE |
|---|---|---|
| .2500" | 1/4" | 1/2" OR LESS |
| .3125" | 5/16" | OVER 12"–18" |
| .3750" | 3/8" | OVER 18"–22" |
| .4375" | 7/16" | OVER 22"–28" |
| .5000" | 1/2" | OVER 28"–34" |
| .5625" | 9/16" | OVER 34"–42" |
| .6250" | 5/8" | OVER 42"–48" |

OVER 48" MUST BE APPROVED BY R.R. CO.

NOTE: THIS CHART IS ONLY FOR SMOOTH STEEL CASING PIPES WITH MINIUMN YIELD STRENGTH OF 35,000 PSI.

NOT FOR CONSTRUCTION

| REV. | DATE | BY | DESCRIPTION |
|---|---|---|---|

APPROVED BY:
R.C.E. 047282
DATE:
ENGINEERING SERVICES MANAGER FOR CITY ENGINEER

APPROVED BY:
R.C.E. 047282
DATE:
ENGINEERING SERVICES MANAGER FOR CITY ENGINEER

CITY OF VISALIA
ENGINEERING DEPARTMENT
ADAM ASHFORD
336 NORTH BEN MADDOX WAY
VISALIA CA. 93292

PARSONS
100 WEST WALNUT STREET
PASADENA, CA 91124
OFFICE: 626.440.2000
FAX: 626.440.4705
WWW.PARSONS.COM

PROJECT NAME: CITY OF VISALIA
WATER CONSERVATION PLANT UPGRADES

SHEET TITLE: RECYCLED WATER PIPELINE
WCP EAST WEST PIPELINE
STATE HWY 99 BORE DETAIL

EST. 1968
PROVOST & PRITCHARD
CONSULTING GROUP
An Employee Owned Company
130 NORTH GARDEN STREET
VISALIA, CALIFORNIA 93291–6362
559/636–1166 FAX 559/636–1177
www.ppeng.com

COPYRIGHT 2010 by PROVOST & PRITCHARD ENGINEERING GROUP, INC. ALL RIGHTS RESERVED
The firm of Provost & Pritchard Engineering Group, Inc. expressly reserves its common law copyright and other applicable property rights in these plans. These plans are not to be reproduced, changed, or copied in any form or manner whatsoever, nor are they to be assigned to a third party without first obtaining the written permission and consent of Provost & Pritchard Engineering Group, Inc. In the event of unauthorized reuse of these plans by a third party, the third party shall hold the firm of Provost & Pritchard Engineering Group, Inc. harmless, and shall bear the cost of Provost & Pritchard Engineering Group, Inc.'s legal fees associated with defending and enforcing these rights.

| | |
|---|---|
| ISSUE DATE: | 12–6–2010 |
| CHECKED BY: | |
| DESIGNED BY: | |
| DRAWN BY: | P&P |
| SCALE: | AS NOTED |
| DWG. NO.: | R–44.3 |
| SHEET | OF |

V:\Clients\Parsons–1979\197909V1–Visalia WCP Pipelines\DWG\SHEET\PP–WTP–E_W\197909V1–PP–STA 584–590–3 last saved by MICHAELB on 1/5/11 plotted 10/25/2010 10:37:45 AM
V:\Clients\Parsons–1979\197909V1–Visalia WCP Pipelines\DWG\SHEET\PP–WTP–E_W\197909V1–PP–STA 584–590–3.dwg Jan 05, 2011 – 4:11pm

Know what's **below.** **Call** before you dig.

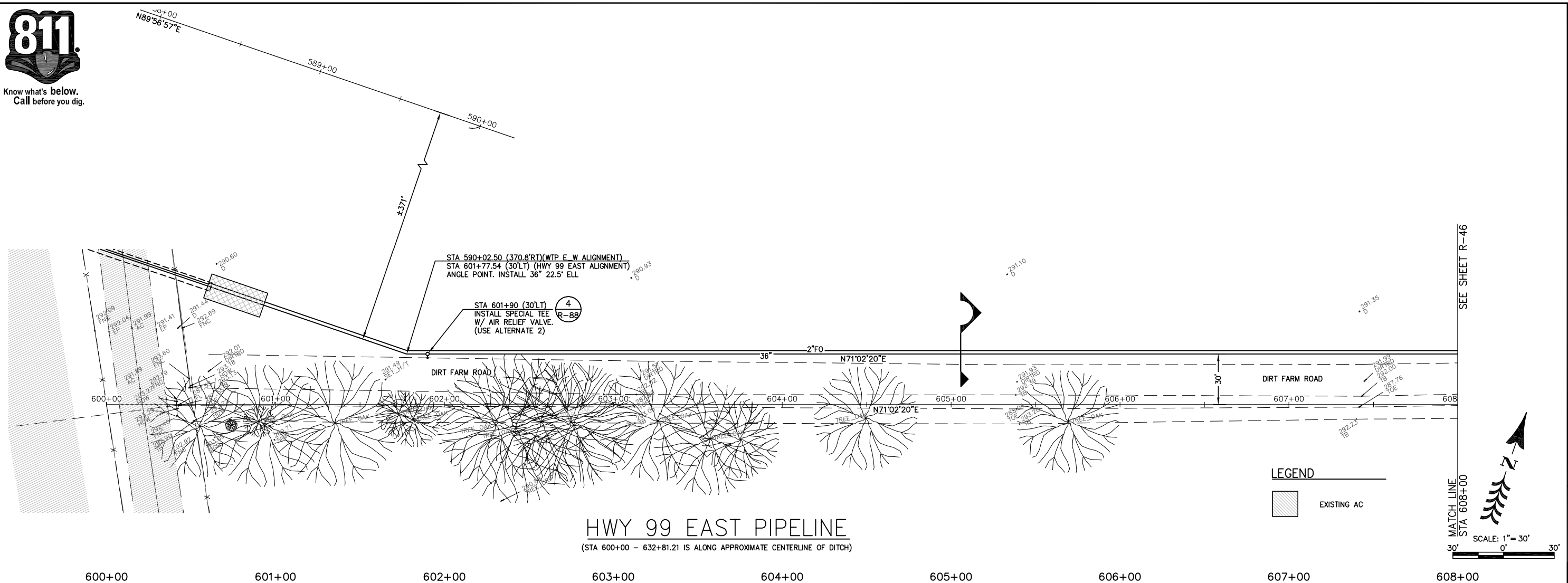


LEGEND

EXISTING AC

# HWY 99 EAST PIPELINE

(STA 600+00 – 632+81.21 IS ALONG APPROXIMATE CENTERLINE OF DITCH)

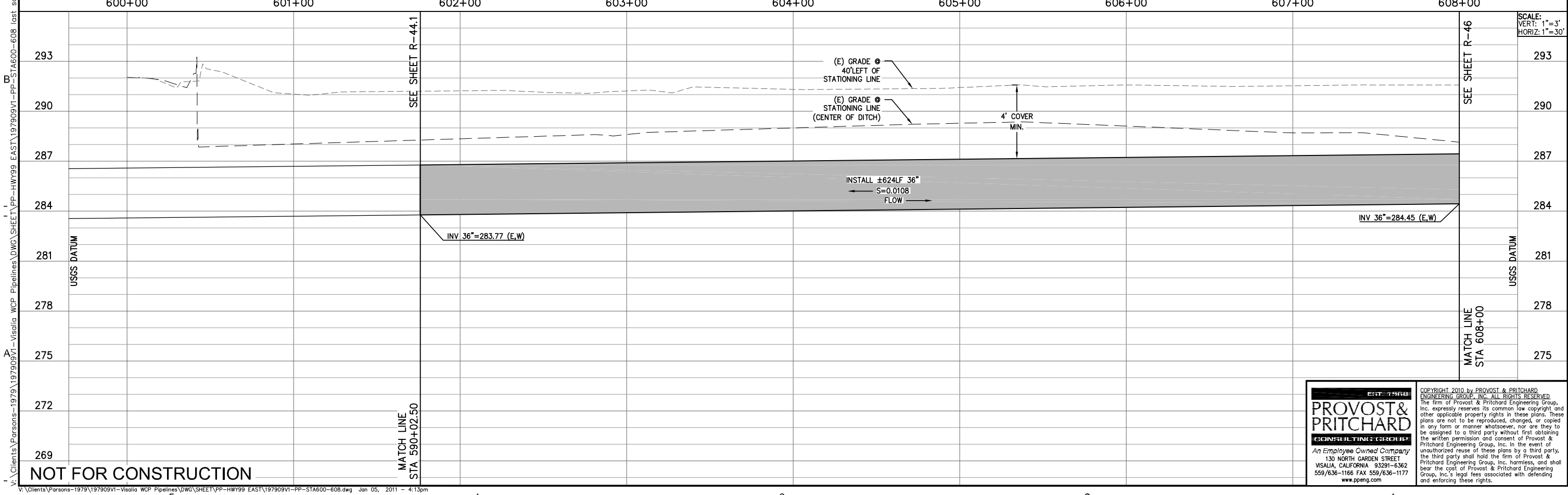


SCALE:
VERT: 1"=3'
HORIZ: 1"=30'

NOT FOR CONSTRUCTION

V:\Clients\Parsons-1979\197909V1-Visalia WCP Pipelines\DWG\SHEET\PP-HWY99 EAST\197909V1-PP-STA600-608.dwg Jan 05, 2011 - 4:13pm

d by MICHAELB on 1/5/11 plotted 4/15/2010 9:42:39 AM

| REV. | DATE | BY | DESCRIPTION |
|---|---|---|---|
| | | | |

APPROVED BY: _____ R.C.E. 47282
ENGINEERING SERVICES MANAGER FOR CITY ENGINEER
DATE: _____

APPROVED BY: _____ R.C.E. 47282
ENGINEERING SERVICES MANAGER FOR CITY ENGINEER
DATE: _____

CITY OF VISALIA
PUBLIC WORKS DEPARTMENT
336 NORTH BEN MADDOX WAY
VISALIA CA. 93292

PARSONS
100 WEST WALNUT STREET
PASADENA, CA 91124
OFFICE: 626.440.2000
FAX: 626.440.2630
WWW.PARSONS.COM

PROJECT NAME: CITY OF VISALIA
WATER CONSERVATION PLANT UPGRADES

SHEET TITLE: RECYCLED WATER PIPELINE
HWY 99 EAST
STA 600-608

EST. 1968
PROVOST& PRITCHARD
CONSULTING GROUP
An Employee Owned Company
130 NORTH GARDEN STREET
VISALIA, CALIFORNIA 93291-6362
559/636-1166 FAX 559/636-1177
www.ppeng.com

COPYRIGHT 2010 by PROVOST & PRITCHARD ENGINEERING GROUP, INC. ALL RIGHTS RESERVED
The firm of Provost & Pritchard Engineering Group, Inc. expressly reserves its common law copyright and other applicable property rights in these plans. These plans are not to be reproduced, changed, or copied in any form or manner whatsoever, nor are they to be assigned to a third party without first obtaining the written permission and consent of Provost & Pritchard Engineering Group, Inc. In the event of unauthorized reuse of these plans by a third party, the third party shall hold the firm of Provost & Pritchard Engineering Group, Inc. harmless, and shall bear the cost of Provost & Pritchard Engineering Group, Inc.'s legal fees associated with defending and enforcing these rights.

| | |
|---|---|
| ISSUE DATE: | 12-6-2010 |
| CHECKED BY: | |
| DESIGNED BY: | |
| DRAWN BY: | P&P |
| SCALE: | AS NOTED |
| DWG. NO.: | R-45 |
| SHEET | OF |

811 Know what's below. Call before you dig.

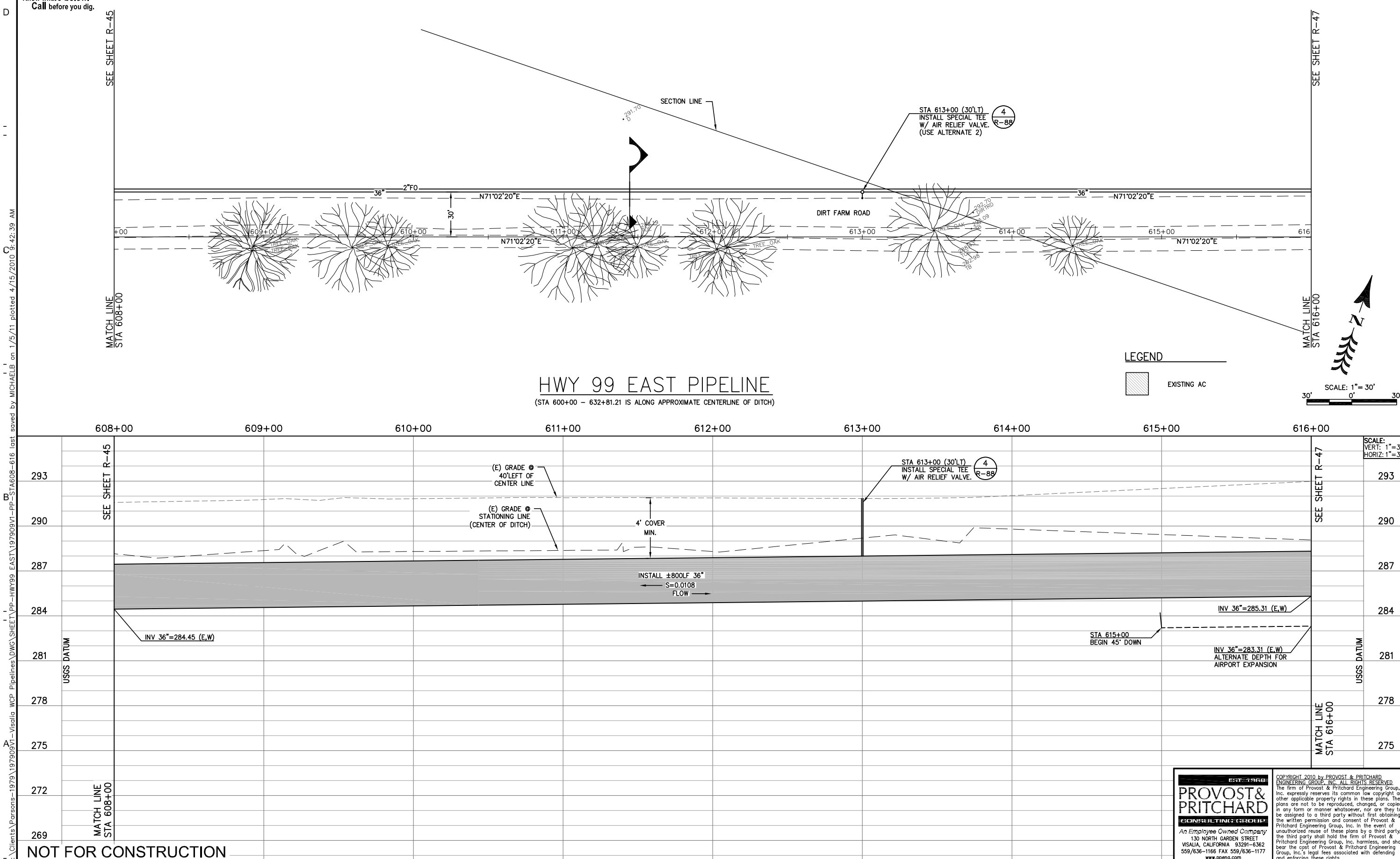


# HWY 99 EAST PIPELINE

(STA 600+00 – 632+81.21 IS ALONG APPROXIMATE CENTERLINE OF DITCH)

NOT FOR CONSTRUCTION

| REV. | DATE | BY | DESCRIPTION |
|---|---|---|---|

APPROVED BY: R.C.E. C47262
ENGINEERING SERVICES MANAGER FOR CITY ENGINEER
DATE:

APPROVED BY: R.C.E. C47262
ENGINEERING SERVICES MANAGER FOR CITY ENGINEER
DATE:

CITY OF VISALIA
PUBLIC WORKS DEPARTMENT
336 NORTH BEN MADDOX WAY
VISALIA CA. 93292

PARSONS
100 WEST WALNUT STREET
PASADENA, CA 91124
OFFICE: 626.440.2000
FAX: 626.440.6337
WWW.PARSONS.COM

PROJECT NAME: CITY OF VISALIA
WATER CONSERVATION PLANT UPGRADES

SHEET TITLE: RECYCLED WATER PIPELINE
HWY 99 EAST
STA 608-616

EST. 1968
PROVOST & PRITCHARD
CONSULTING GROUP
An Employee Owned Company
130 NORTH GARDEN STREET
VISALIA, CALIFORNIA 93291-6362
559/636-1166 FAX 559/636-1177
www.ppeng.com

COPYRIGHT 2010 by PROVOST & PRITCHARD ENGINEERING GROUP, INC. ALL RIGHTS RESERVED
The firm of Provost & Pritchard Engineering Group, Inc. expressly reserves its common law copyright and other applicable property rights in these plans. These plans are not to be reproduced, changed, or copied in any form or manner whatsoever, nor are they to be assigned to a third party without first obtaining the written permission and consent of Provost & Pritchard Engineering Group, Inc. In the event of unauthorized reuse of these plans by a third party, the third party shall hold the firm of Provost & Pritchard Engineering Group, Inc. harmless, and shall bear the cost of Provost & Pritchard Engineering Group, Inc.'s legal fees associated with defending and enforcing these rights.

| | |
|---|---|
| ISSUE DATE: | 12-6-2010 |
| CHECKED BY: | |
| DESIGNED BY: | |
| DRAWN BY: | P&P |
| SCALE: | AS NOTED |
| DWG. NO.: | R-46 |
| SHEET | OF |

V:\Clients\Parsons-1979\197909V1-Visalia WCP Pipelines\DWG\SHEET\PP-HWY99 EAST\197909V1-PP-STA608-616 last saved by MICHAELB on 1/5/11 plotted 4/15/2010 9:42:39 AM
V:\Clients\Parsons-1979\197909V1-Visalia WCP Pipelines\DWG\SHEET\PP-HWY99 EAST\197909V1-PP-STA608-616.dwg Jan 05, 2011 - 4:14pm

811
Know what's **below.**
**Call** before you dig.

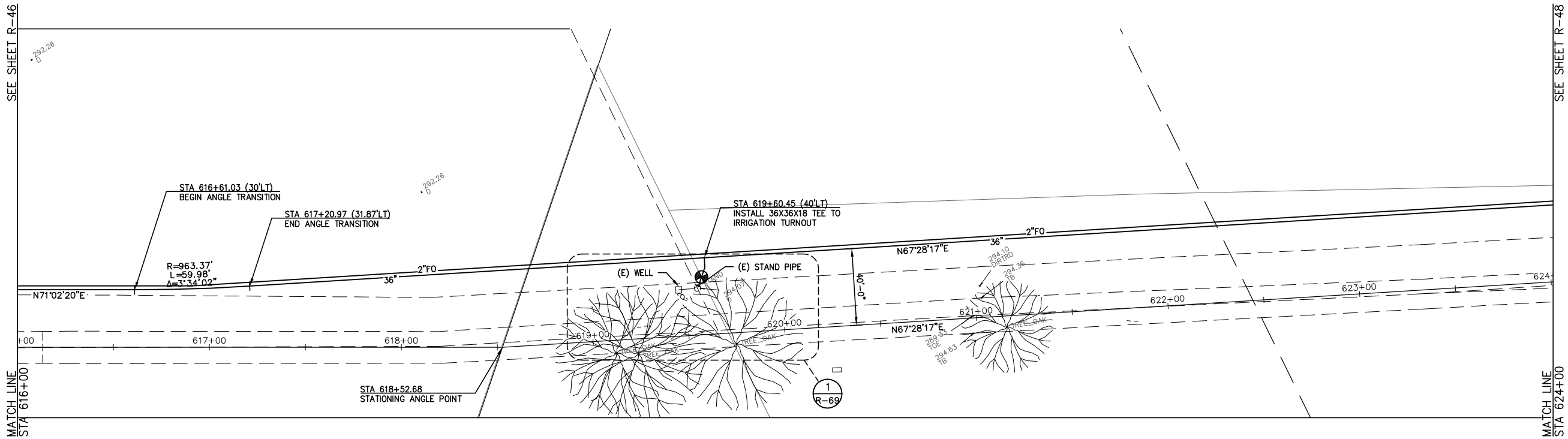


LEGEND

EXISTING AC

SCALE: 1"= 30'
30' 0' 30'

# HWY 99 EAST PIPELINE

(STA 600+00 – 632+81.21 IS ALONG APPROXIMATE CENTERLINE OF DITCH)

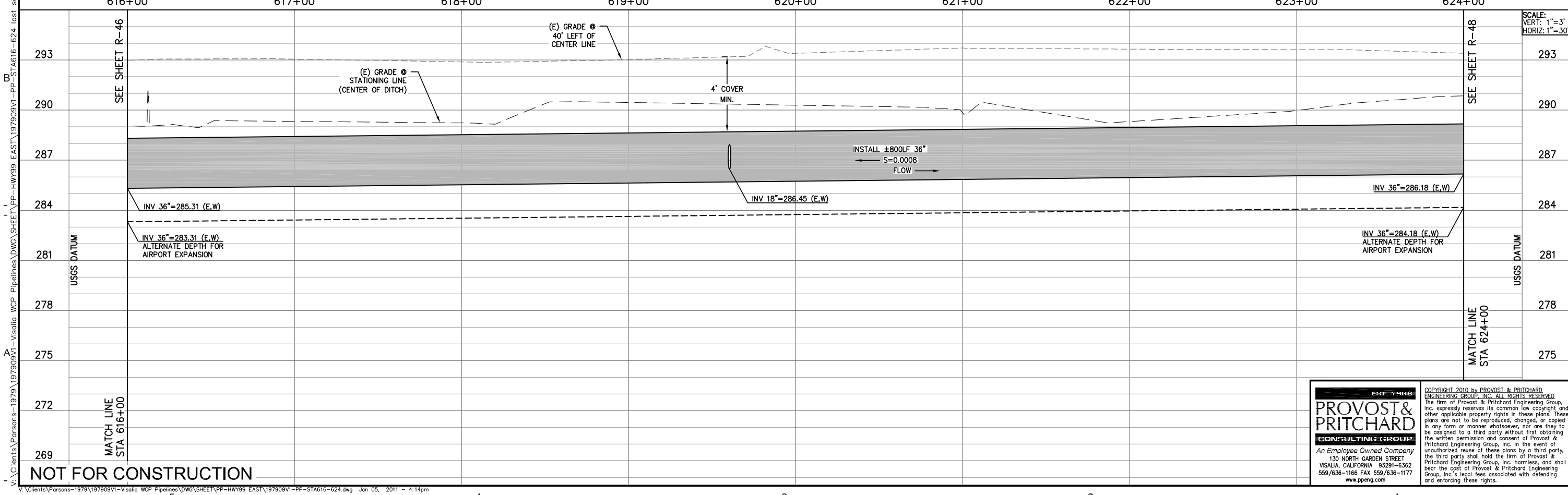


NOT FOR CONSTRUCTION

| REV. | DATE | BY | DESCRIPTION |
|---|---|---|---|
| | | | |

APPROVED BY: _____ R.C.E. 047282
ENGINEERING SERVICES MANAGER FOR CITY ENGINEER
DATE: _____

APPROVED BY: _____ R.C.E. 047282
ENGINEERING SERVICES MANAGER FOR CITY ENGINEER
DATE: _____

CITY OF VISALIA
ENGINEERING DEPARTMENT
336 NORTH BEN MADDOX WAY
VISALIA CA. 93292

PARSONS
100 WEST WALNUT STREET
PASADENA, CA 91124
OFFICE: 626.440.2000
FAX: 626.440.2630
WWW.PARSONS.COM

PROJECT NAME: CITY OF VISALIA
WATER CONSERVATION PLANT UPGRADES

SHEET TITLE: RECYCLED WATER PIPELINE
HWY 99 EAST
STA 616-624

EST. 1968
PROVOST& PRITCHARD
CONSULTING GROUP
*An Employee Owned Company*
130 NORTH GARDEN STREET
VISALIA, CALIFORNIA 93291-6362
559/636-1166 FAX 559/636-1177
www.ppeng.com

COPYRIGHT 2010 by PROVOST & PRITCHARD ENGINEERING GROUP, INC. ALL RIGHTS RESERVED.
The firm of Provost & Pritchard Engineering Group, Inc. expressly reserves its common law copyright and other applicable property rights in these plans. These plans are not to be reproduced, changed, or copied in any form or manner whatsoever, nor are they to be assigned to a third party without first obtaining the written permission and consent of Provost & Pritchard Engineering Group, Inc. In the event of unauthorized reuse of these plans by a third party, the third party shall hold the firm of Provost & Pritchard Engineering Group, Inc. harmless, and shall bear the cost of Provost & Pritchard Engineering Group, Inc.'s legal fees associated with defending and enforcing these rights.

| | |
|---|---|
| ISSUE DATE: | 12-6-2010 |
| CHECKED BY: | |
| DESIGNED BY: | |
| DRAWN BY: | P&P |
| SCALE: | AS NOTED |
| DWG. NO.: | R-47 |
| SHEET | OF |

Saved by MICHAELB on 1/5/11 plotted 4/15/2010 9:42:39 AM
V:\Clients\Parsons-1979\197909V1-Visalia WCP Pipelines\DWG\SHEET\PP-HWY99 EAST\197909V1-PP-STA616-624 last
V:\Clients\Parsons-1979\197909V1-Visalia WCP Pipelines\DWG\SHEET\PP-HWY99 EAST\197909V1-PP-STA616-624.dwg Jan 05, 2011 - 4:14pm

Know what's **below.**
**Call** before you dig.

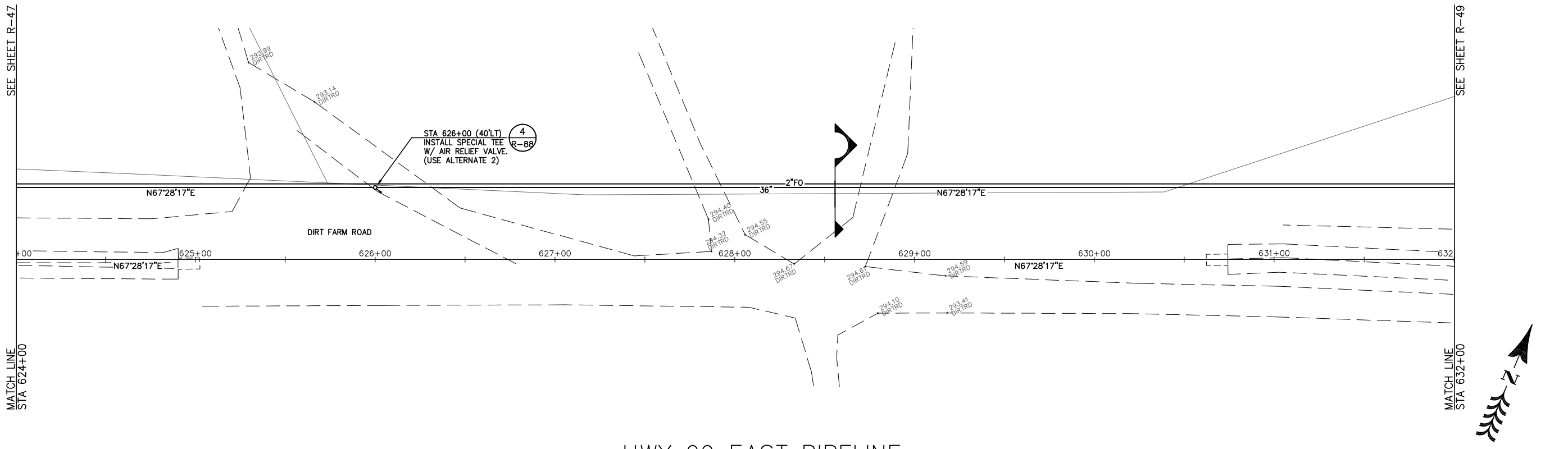


# HWY 99 EAST PIPELINE

(STA 600+00 – 632+81.21 IS ALONG APPROXIMATE CENTERLINE OF DITCH)

SCALE: 1"= 30'
30' 0' 30'

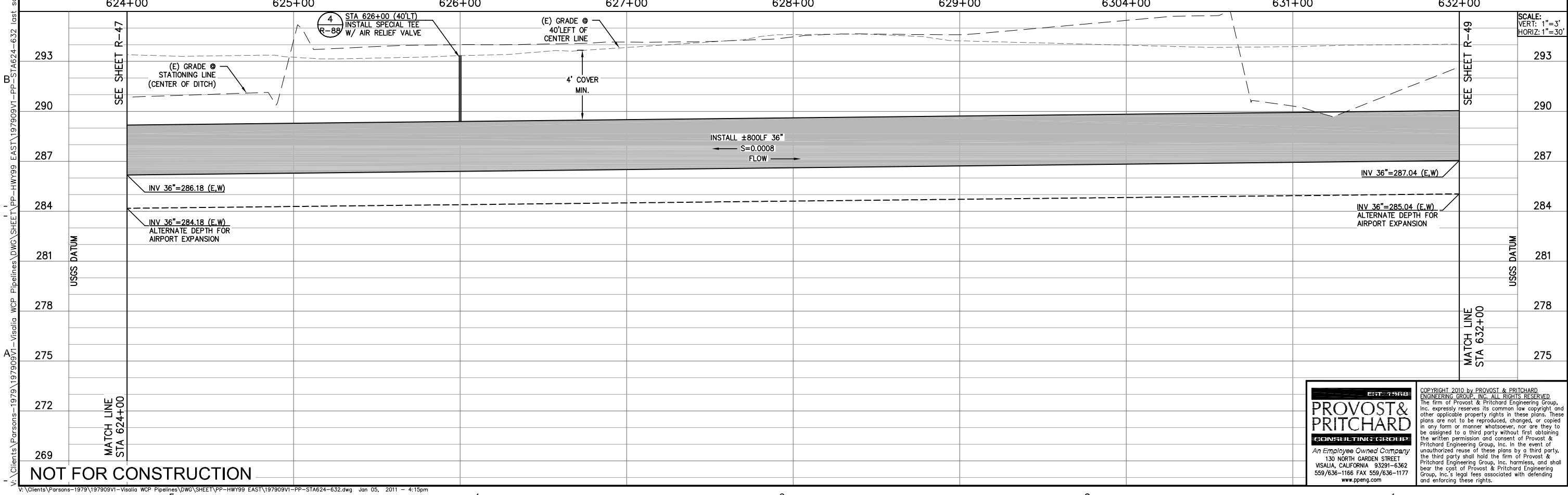


NOT FOR CONSTRUCTION

| REV. | DATE | BY | DESCRIPTION |
|---|---|---|---|
| | | | |

APPROVED BY: _____ R.C.E. 47282
ENGINEERING SERVICES MANAGER FOR CITY ENGINEER
DATE: _____

APPROVED BY: _____ R.C.E. 47282
ENGINEERING SERVICES MANAGER FOR CITY ENGINEER
DATE: _____

CITY OF VISALIA
ENGINEERING DEPARTMENT
336 NORTH BEN MADDOX WAY
VISALIA CA. 93292

PARSONS
100 WEST WALNUT STREET
PASADENA, CA 91124
OFFICE: 626.440.2000
FAX: 626.440.2630
WWW.PARSONS.COM

PROJECT NAME: CITY OF VISALIA
WATER CONSERVATION PLANT UPGRADES

SHEET TITLE: RECYCLED WATER PIPELINE
HWY 99 EAST
STA 624-632

EST. 1968
PROVOST& PRITCHARD
CONSULTING GROUP
*An Employee Owned Company*
130 NORTH GARDEN STREET
VISALIA, CALIFORNIA 93291-6362
559/636-1166 FAX 559/636-1177
www.ppeng.com

COPYRIGHT 2010 by PROVOST & PRITCHARD ENGINEERING GROUP, INC. ALL RIGHTS RESERVED
The firm of Provost & Pritchard Engineering Group, Inc. expressly reserves its common law copyright and other applicable property rights in these plans. These plans are not to be reproduced, changed, or copied in any form or manner whatsoever, nor are they to be assigned to a third party without first obtaining the written permission and consent of Provost & Pritchard Engineering Group, Inc. In the event of unauthorized reuse of these plans by a third party, the third party shall hold the firm of Provost & Pritchard Engineering Group, Inc. harmless, and shall bear the cost of Provost & Pritchard Engineering Group, Inc.'s legal fees associated with defending and enforcing these rights.

| | |
|---|---|
| ISSUE DATE: | 12-6-2010 |
| CHECKED BY: | |
| DESIGNED BY: | |
| DRAWN BY: | P&P |
| SCALE: | AS NOTED |
| DWG. NO.: | R-48 |
| SHEET | OF |

V:\Clients\Parsons-1979\197909V1-Visalia WCP Pipelines\DWG\SHEET\PP-HWY99 EAST\197909V1-PP-STA624-632 last saved by MICHAELB on 1/5/11 plotted 4/15/2010 9:42:39 AM
V:\Clients\Parsons-1979\197909V1-Visalia WCP Pipelines\DWG\SHEET\PP-HWY99 EAST\197909V1-PP-STA624-632.dwg Jan 05, 2011 - 4:15pm

Know what's **below.** **Call** before you dig.

SEE SHEET R-48

MATCH LINE STA 632+00

STA 632+48.12 (40'LT)
INSTALL 45° ELL

INSTALL 5' OF PIPE BETWEEN ELBOWS.

STA 633+10.29 (43.9'LT)
INSTALL 22.5° ELL

STA 633+93.80 (43.5'LT)
INSTALL 36X18X36 TEE.

INSTALL ±90LF 18" PVC

(E) WELL

(E) STAND PIPE

STA 635+06 (43'LT)
INSTALL SPECIAL TEE W/ AIR RELIEF VALVE. (USE ALTERNATE 2)

STA 638+00 (41.7'LT)
INSTALL 36" Y.

STA 638+40.60 (41.5'LT)
INSTALL 36" 45° ELL.

STA 638+81.29 (41.3'LT)
INSTALL SPECIAL TEE W/ AIR RELIEF VALVE. (USE ALTERNATE 2)

STA 639+23.23 (123.4'LT)
CONNECTION TO PLAZA DRIVE PIPELINE

# HWY 99 EAST PIPELINE

(STA 632+81.21 – 657+00 IS ALONG SECTION LINE)

LEGEND

EXISTING AC

SCALE: 1"= 30'

632+00 633+00 634+00 635+00 636+00 637+00 638+00 639+00 640+00

SEE SHEET R-48

SEE SHEET R-57

MATCH LINE STA 632+00

MATCH LINE STA 639+23.23

USGS DATUM

296 293 290 287 284 281 278 275 272

STA 635+15.50 (42.9'LT)
INSTALL SPECIAL TEE W/ AIR RELIEF VALVE.

(E) GRADE @ 40' LEFT OF CENTER LINE

4' COVER MIN.

INSTALL ±800LF 36"
S=0.0008
FLOW

INV 36"=287.04 (E,W)

INV 36"=287.15 (N,W)

INV 36"=288.06 (N,S)

INV 36"=285.04 (E,W)
ALTERNATE DEPTH FOR AIRPORT EXPANSION

STA 637+00
END 45° DOWN

STA 638+81.29 (41.3'LT)
INSTALL SPECIAL TEE W/ AIR RELIEF VALVE.

INV 36"=287.60 (N,S,W)

INV 36"=287.6 (N,S)

SCALE:
VERT: 1"=3'
HORIZ: 1"=30'

NOT FOR CONSTRUCTION

| REV. | DATE | BY | DESCRIPTION |
|---|---|---|---|

APPROVED BY: _____ R.C.E. 047262
ENGINEERING SERVICES MANAGER FOR CITY ENGINEER
DATE: _____

APPROVED BY: _____ R.C.E. 047262
ENGINEERING SERVICES MANAGER FOR CITY ENGINEER
DATE: _____

CITY OF VISALIA
ENGINEERING DEPARTMENT
336 NORTH BEN MADDOX WAY
VISALIA CA. 93292

PARSONS
100 WEST WALNUT STREET
PASADENA, CA 91124
OFFICE: 626.440.2000
FAX: 626.440.2630
WWW.PARSONS.COM

PROJECT NAME: CITY OF VISALIA
WATER CONSERVATION PLANT UPGRADES
RECYCLED WATER PIPELINE
HWY 99 EAST
STA 632-640

SHEET TITLE:

COPYRIGHT 2010 by PROVOST & PRITCHARD ENGINEERING GROUP, INC. ALL RIGHTS RESERVED
The firm of Provost & Pritchard Engineering Group, Inc. expressly reserves its common law copyright and other applicable property rights in these plans. These plans are not to be reproduced, changed, or copied in any form or manner whatsoever, nor are they to be assigned to a third party without first obtaining the written permission and consent of Provost & Pritchard Engineering Group, Inc. In the event of unauthorized reuse of these plans by a third party, the third party shall hold the firm of Provost & Pritchard Engineering Group, Inc. harmless, and shall bear the cost of Provost & Pritchard Engineering Group, Inc.'s legal fees associated with defending and enforcing these rights.

EST. 1968
PROVOST & PRITCHARD
CONSULTING GROUP
An Employee Owned Company
130 NORTH GARDEN STREET
VISALIA, CALIFORNIA 93291-6362
559/636-1166 FAX 559/636-1177
www.ppeng.com

| | |
|---|---|
| ISSUE DATE: | 12-6-2010 |
| CHECKED BY: | |
| DESIGNED BY: | |
| DRAWN BY: | P&P |
| SCALE: | AS NOTED |
| DWG. NO.: | R-49 |
| SHEET | OF |

Saved by MICHAELB on 1/5/11 plotted 4/15/2010 9:42:39 AM
V:\Clients\Parsons-1979\197909V1-Visalia WCP Pipelines\DWG\SHEET\PP-HWY99 EAST\197909V1-PP-STA632-640 last saved by MICHAELB on 1/5/11 plotted 4/15/2010 9:42:39 AM.dwg
V:\Clients\Parsons-1979\197909V1-Visalia WCP Pipelines\DWG\SHEET\PP-HWY99 EAST\197909V1-PP-STA632-640.dwg Jan 05, 2011 - 4:15pm

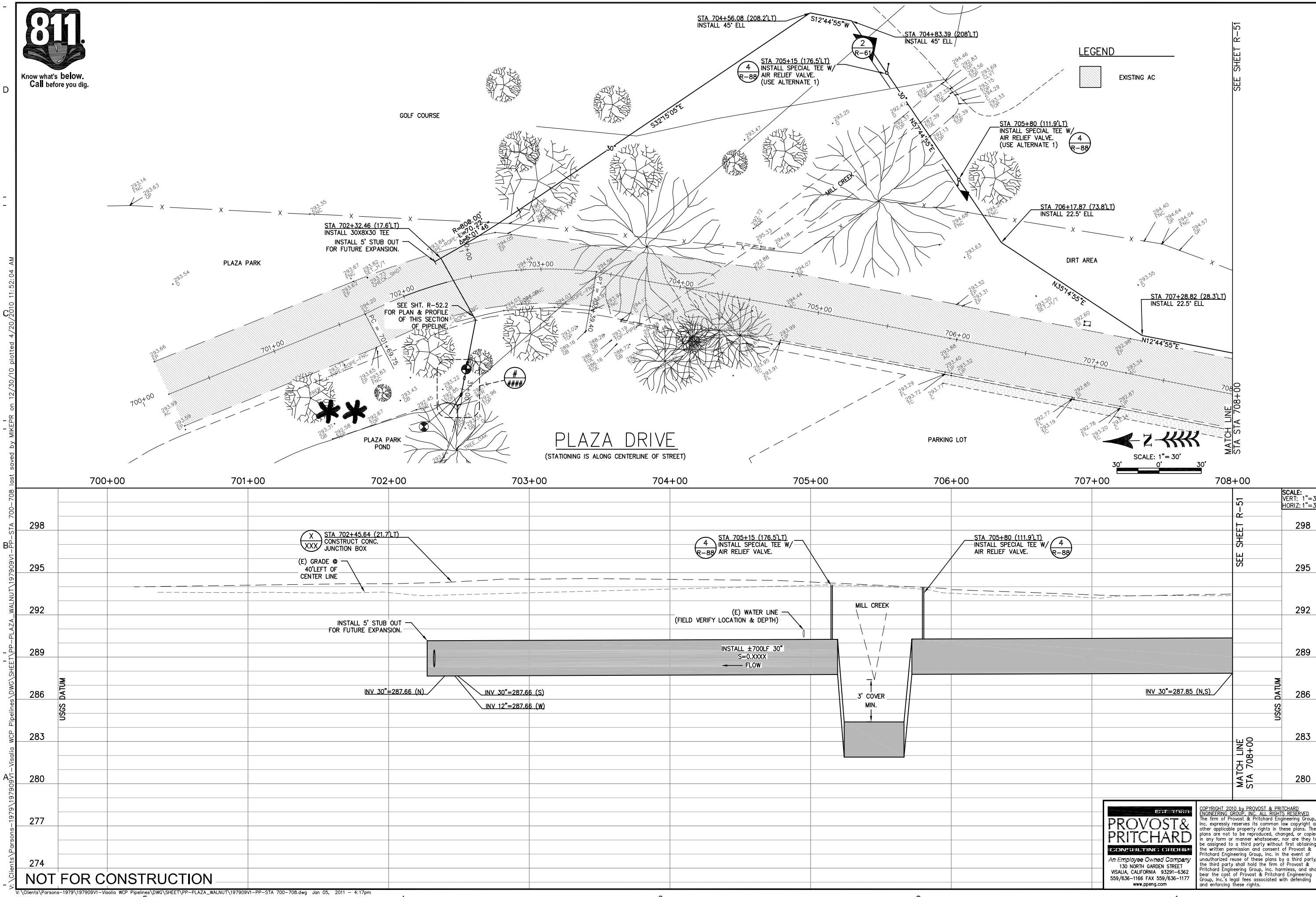


NOT FOR CONSTRUCTION

| REV. | DATE | BY | DESCRIPTION |
|---|---|---|---|

APPROVED BY: R.C.E. C47262
ENGINEERING SERVICES MANAGER FOR CITY ENGINEER
DATE:

APPROVED BY: R.C.E. C47262
ENGINEERING SERVICES MANAGER FOR CITY ENGINEER
DATE:

CITY OF VISALIA
PUBLIC WORKS DEPARTMENT
336 NORTH BEN MADDOX WAY
VISALIA CA. 93292

PARSONS
100 WEST WALNUT STREET
PASADENA, CA 91124
OFFICE: 626.440.2000
FAX: 626.440.6337
WWW.PARSONS.COM

PROJECT NAME: CITY OF VISALIA
WATER CONSERVATION PLANT UPGRADES

SHEET TITLE: RECYCLED WATER PIPELINE
PLAZA DR & WALNUT AVE
STA 700-708

EST. 1968
PROVOST & PRITCHARD
CONSULTING GROUP
An Employee Owned Company
130 NORTH GARDEN STREET
VISALIA, CALIFORNIA 93291-6362
559/636-1166 FAX 559/636-1177
www.ppeng.com

COPYRIGHT 2010 by PROVOST & PRITCHARD ENGINEERING GROUP, INC. ALL RIGHTS RESERVED
The firm of Provost & Pritchard Engineering Group, Inc. expressly reserves its common law copyright and other applicable property rights in these plans. These plans are not to be reproduced, changed, or copied in any form or manner whatsoever, nor are they to be assigned to a third party without first obtaining the written permission and consent of Provost & Pritchard Engineering Group, Inc. In the event of unauthorized reuse of these plans by a third party, the third party shall hold the firm of Provost & Pritchard Engineering Group, Inc. harmless, and shall bear the cost of Provost & Pritchard Engineering Group, Inc.'s legal fees associated with defending and enforcing these rights.

| | |
|---|---|
| ISSUE DATE: | 12-6-2010 |
| CHECKED BY: | |
| DESIGNED BY: | |
| DRAWN BY: | P&P |
| SCALE: | AS NOTED |
| DWG. NO.: | R-50.1 |
| SHEET | OF |

V:\Clients\Parsons-1979\197909V1-Visalia WCP Pipelines\DWG\SHEET\PP-PLAZA_WALNUT\197909V1-PP-STA 700-708 last saved by MIKEPR on 12/30/10 plotted 4/20/2010 11:52:04 AM
V:\Clients\Parsons-1979\197909V1-Visalia WCP Pipelines\DWG\SHEET\PP-PLAZA_WALNUT\197909V1-PP-STA 700-708.dwg Jan 05, 2011 - 4:17pm

811
Know what's **below.**
**Call** before you dig.

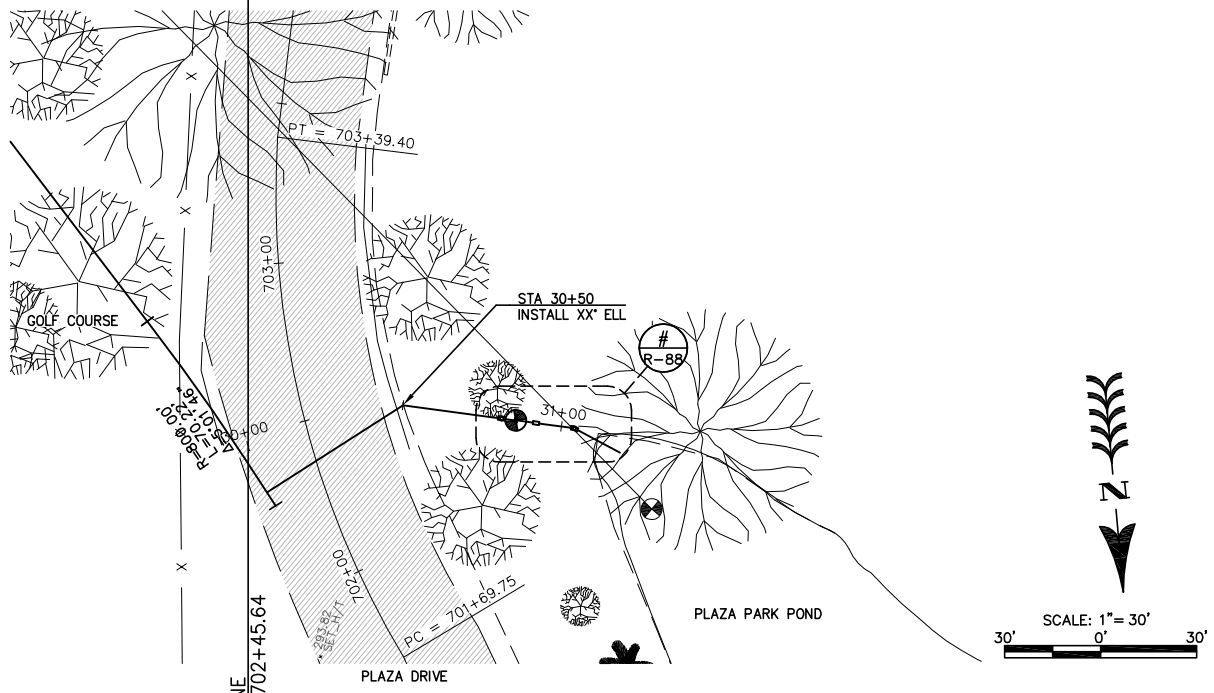


LEGEND

EXISTING AC

SCALE: 1"= 30'
30' 0' 30'

# PLAZA PARK POND

(STATIONING IS ALONG CENTERLINE OF PIPE)

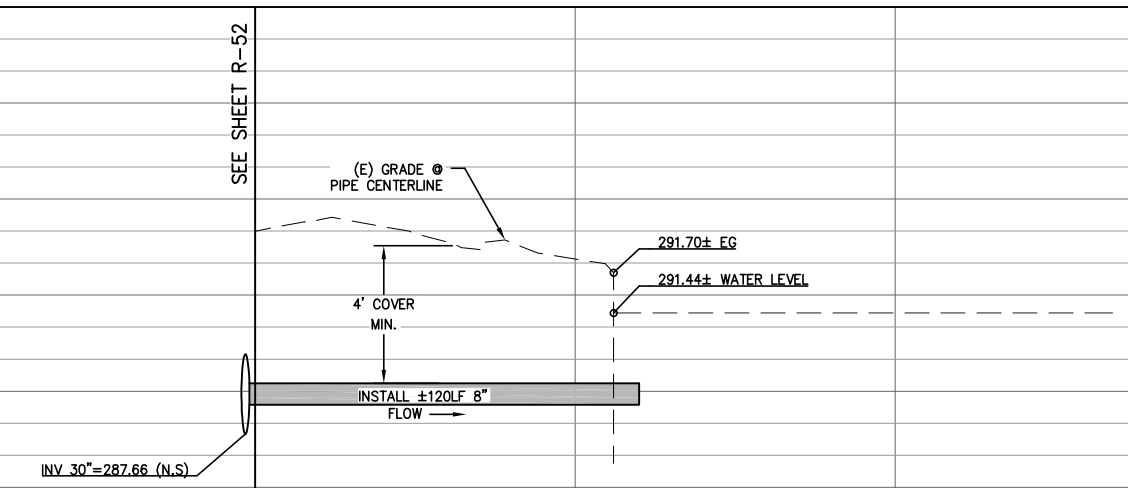


SCALE:
VERT: 1"=3'
HORIZ: 1"=30'

NOT FOR CONSTRUCTION

| REV. | DATE | BY | DESCRIPTION |
|---|---|---|---|
| | | | |

APPROVED BY: _____ R.C.E. 47282
ENGINEERING SERVICES MANAGER FOR CITY ENGINEER
DATE: _____

APPROVED BY: _____ R.C.E. 47282
ENGINEERING SERVICES MANAGER FOR CITY ENGINEER
DATE: _____

CITY OF VISALIA
ENGINEERING DEPARTMENT
ADAM ASHFORD, P.E.
336 NORTH BEN MADDOX WAY
VISALIA CA. 93292

PARSONS
100 WEST WALNUT STREET
PASADENA, CA 91124
OFFICE: 626.440.2000
FAX: 626.440.2630
WWW.PARSONS.COM

PROJECT NAME: CITY OF VISALIA
WATER CONSERVATION PLANT UPGRADES

SHEET TITLE: RECYCLED WATER PIPELINE
PLAZA DR & WALNUT AVE
STA 30-31-PLAZA PARK POND

PROVOST& PRITCHARD
EST. 1968
CONSULTING GROUP
An Employee Owned Company
130 NORTH GARDEN STREET
VISALIA, CALIFORNIA 93291-6362
559/636-1166 FAX 559/636-1177
www.ppeng.com

COPYRIGHT 2010 by PROVOST & PRITCHARD ENGINEERING GROUP, INC. ALL RIGHTS RESERVED
The firm of Provost & Pritchard Engineering Group, Inc. expressly reserves its common law copyright and other applicable property rights in these plans. These plans are not to be reproduced, changed, or copied in any form or manner whatsoever, nor are they to be assigned to a third party without first obtaining the written permission and consent of Provost & Pritchard Engineering Group, Inc. In the event of unauthorized reuse of these plans by a third party, the third party shall hold the firm of Provost & Pritchard Engineering Group, Inc. harmless, and shall bear the cost of Provost & Pritchard Engineering Group, Inc.'s legal fees associated with defending and enforcing these rights.

| | |
|---|---|
| ISSUE DATE: | 12-6-2010 |
| CHECKED BY: | |
| DESIGNED BY: | |
| DRAWN BY: | P&P |
| SCALE: | AS NOTED |
| DWG. NO.: | R-50.2 |
| SHEET | OF |

Last saved by MICHAELB on 12/30/10 plotted 9/20/2010 8:59:06 AM
V:\Clients\Parsons-1979\197909V1-Visalia WCP Pipelines\DWG\SHEET\PP-PLAZA_WALNUT\197909V1-PP-PLAZA PARK POND last saved by MICHAELB on 12/30/10 plotted 9/20/2010 8:59:06 AM
V:\Clients\Parsons-1979\197909V1-Visalia WCP Pipelines\DWG\SHEET\PP-PLAZA_WALNUT\197909V1-PP-PLAZA PARK POND.dwg Jan 05, 2011 - 4:17pm

Know what's **below.** **Call** before you dig.

SEE SHEET R-50.1

GOLF COURSE

STA 709+54.03 (52.60'LT)
INSTALL 22.5° ELL

STA 711+06.70 (79.32'LT)
INSTALL 45° ELL

S35°14'55"W

N12°44'55"E

S80°14'55"W

S57°44'55"W

GOLF COURSE

STA 713+42.87 (30.57'LT)
INSTALL 22.5° ELL

STA 715+38.70 (40.35'LT)
INSTALL 22.5° ELL

AIRPORT

SEE SHEET R-52

MATCH LINE
STA STA 708+00

MATCH LINE
STA STA 716+00

# PLAZA DRIVE

(STATIONING IS ALONG CENTERLINE OF STREET)

LEGEND

EXISTING AC

SCALE: 1"= 30'
30' 0' 30'

708+00 709+00 710+00 711+00 712+00 713+00 714+00 715+00 716+00

SEE SHEET R-50.1

SEE SHEET R-52

SCALE:
VERT: 1"=3'
HORIZ: 1"=30'

298
295
292
289
286
283
280
277
274

USGS DATUM

4' COVER MIN.

INSTALL ±832LF 30"
S = X.XXXX
FLOW

INV 30"=287.85 (N,S)

INV 30"=288.13 (N,S)

MATCH LINE
STA 708+00

MATCH LINE
STA 716+00

NOT FOR CONSTRUCTION

| REV. | DATE | BY | DESCRIPTION |
|---|---|---|---|
| | | | |

APPROVED BY: _____ R.C.E. 047262
ENGINEERING SERVICES MANAGER FOR CITY ENGINEER
DATE: _____

APPROVED BY: _____ R.C.E. 047262
ENGINEERING SERVICES MANAGER FOR CITY ENGINEER
DATE: _____

CITY OF VISALIA
ENGINEERING DEPARTMENT
WATER DIVISION
336 NORTH BEN MADDOX WAY
VISALIA CA. 93292

PARSONS
100 WEST WALNUT STREET
PASADENA, CA 91124
OFFICE: 626.440.2000
FAX: 626.440.2630
WWW.PARSONS.COM

PROJECT NAME: CITY OF VISALIA
WATER CONSERVATION PLANT UPGRADES

SHEET TITLE: RECYCLED WATER PIPELINE
PLAZA DR & WALNUT AVE
STA 708-716

COPYRIGHT 2010 by PROVOST & PRITCHARD ENGINEERING GROUP, INC. ALL RIGHTS RESERVED
The firm of Provost & Pritchard Engineering Group, Inc. expressly reserves its common law copyright and other applicable property rights in these plans. These plans are not to be reproduced, changed, or copied in any form or manner whatsoever, nor are they to be assigned to a third party without first obtaining the written permission and consent of Provost & Pritchard Engineering Group, Inc. In the event of unauthorized reuse of these plans by a third party, the third party shall hold the firm of Provost & Pritchard Engineering Group, Inc. harmless, and shall bear the cost of Provost & Pritchard Engineering Group, Inc.'s legal fees associated with defending and enforcing these rights.

EST. 1968
PROVOST & PRITCHARD
CONSULTING GROUP
An Employee Owned Company
130 NORTH GARDEN STREET
VISALIA, CALIFORNIA 93291-6362
559/636-1166 FAX 559/636-1177
www.ppeng.com

| | |
|---|---|
| ISSUE DATE: | 12-6-2010 |
| CHECKED BY: | |
| DESIGNED BY: | |
| DRAWN BY: | P&P |
| SCALE: | AS NOTED |
| DWG. NO.: | R-51 |
| SHEET | OF |

Saved by MIKEPR on 12/7/10 plotted 4/20/2010 11:52:04 AM
V:\Clients\Parsons-1979\197909V1-Visalia WCP Pipelines\DWG\SHEET\PP-PLAZA_WALNUT\197909V1-PP-STA 708-716 last saved by MIKEPR on 12/7/10 plotted 4/20/2010 11:52:04 AM
V:\Clients\Parsons-1979\197909V1-Visalia WCP Pipelines\DWG\SHEET\PP-PLAZA_WALNUT\197909V1-PP-STA 708-716.dwg Jan 05, 2011 - 4:17pm

Know what's **below.** **Call** before you dig.

SEE SHEET R-51

GOLF COURSE

GOLF COURSE POND

SECTION LINE

GOLF COURSE

SEE SHEET R-53

PERSIAN DITCH

S35°14'55"W

STA 717+50 (45.8'RT)
INSTALL SPECIAL TEE
W/ AIR RELIEF VALVE.
(USE ALTERNATE 2)
4 / R-88

30"

STA 718+50 (68.4'RT)
INSTALL SPECIAL TEE
W/ AIR RELIEF VALVE.
(USE ALTERNATE 2)
4 / R-88

1 / R-62

CONNECT TO
(E) 12" PIPE.

# / ####

GOLF COURSE

STA 721+40 (51'LT)
INSTALL 36X30 REDUCER

STA 723+37.66 (53.1'RT)
END PIPE CURVE.

PC = 724+13.54

PT = 721+85.49

R=800.00'
L=205.94'
Δ=14°45'59"

STA 717+39.14 (39.7'LT)
INSTALL 45° ELL

PLAZA PARK

717+00

718+00

719+00

720+00

721+00

722+00

723+00

724+00

STA 721+50 (41.4'LT)
INSTALL 36X12X36 TEE

36"

STA 721+60 (38.4'RT)
INSTALL SPECIAL TEE
W/ AIR RELIEF VALVE.
(USE ALTERNATE 2)
4 / R-88

AIRPORT

MATCH LINE
STA STA 716+00

MATCH LINE
STA STA 723+00

FIBRE OPTIC LINE TO
AIRPORT FIRE STATION
1 / R-90

2"FO

# PLAZA DRIVE

(STATIONING IS ALONG CENTERLINE OF STREET)

## LEGEND

EXISTING AC

N

SCALE: 1"= 30'

30' 0' 30'

SEE SHEET R-51

SEE SHEET R-53

STA 717+50 (45.8'RT)
INSTALL SPECIAL TEE
W/ AIR RELIEF VALVE.
(USE ALTERNATE 2)
4 / R-88

STA 718+50 (68.4'RT)
INSTALL SPECIAL TEE
W/ AIR RELIEF VALVE.
(USE ALTERNATE 2)
4 / R-88

(E) GRADE @
50' LT OF STREET CENTERLINE

(E) GRADE @
STREET CENTERLINE

STA 721+60 (38.4'RT)
INSTALL SPECIAL TEE W/
AIR RELIEF VALVE.
4 / R-88

4' COVER
MIN.

2' COVER
MIN.

INSTALL ±160LF 30"
S = 0.00035
FLOW

INSTALL ±305LF 30"
S = 0.0032
FLOW

INV 30"=288.13 (N,S)

INV 36"=284.72 (N,S)

INV 36"=284.72 (N,S)

INV 36"=286.60 (S,E)

INV 36"=285.79 (N,S)

USGS DATUM

MATCH LINE
STA 716+00

MATCH LINE
STA 724+00

298
295
292
289
286
283
280

716+00 717+00 718+00 719+00 720+00 721+00 722+00 723+00 724+00

SCALE:
VERT: 1"=3'
HORIZ: 1"=30'

NOT FOR CONSTRUCTION

V:\Clients\Parsons-1979\197909V1-Visalia WCP Pipelines\DWG\SHEET\PP-PLAZA_WALNUT\197909V1-PP-STA 716-724.dwg Jan 05, 2011 - 4:18pm

saved by MICHAELB on 1/3/11 plotted 4/20/2010 12:19:04 PM

V:\Clients\Parsons-1979\197909V1-Visalia WCP Pipelines\DWG\SHEET\PP-PLAZA_WALNUT\197909V1-PP-STA 716-724 last saved by

| REV. | DATE | BY | DESCRIPTION |
|---|---|---|---|
| | | | |

APPROVED BY: _____ R.C.E. 047282
ENGINEERING SERVICES MANAGER FOR CITY ENGINEER
DATE: _____

APPROVED BY: _____ R.C.E. 047282
ENGINEERING SERVICES MANAGER FOR CITY ENGINEER
DATE: _____

CITY OF VISALIA
PUBLIC WORKS DEPARTMENT
336 NORTH BEN MADDOX WAY
VISALIA CA. 93292

PARSONS
100 WEST WALNUT STREET
PASADENA, CA 91124
OFFICE: 626.440.2000
FAX: 626.440.2630
WWW.PARSONS.COM

PROJECT NAME: CITY OF VISALIA
WATER CONSERVATION PLANT UPGRADES

SHEET TITLE: RECYCLED WATER PIPELINE
PLAZA DR & WALNUT AVE
STA 716-724

EST. 1968
PROVOST & PRITCHARD
CONSULTING GROUP
An Employee Owned Company
130 NORTH GARDEN STREET
VISALIA, CALIFORNIA 93291-6362
559/636-1166 FAX 559/636-1177
www.ppeng.com

COPYRIGHT 2010 by PROVOST & PRITCHARD ENGINEERING GROUP, INC. ALL RIGHTS RESERVED
The firm of Provost & Pritchard Engineering Group, Inc. expressly reserves its common law copyright and other applicable property rights in these plans. These plans are not to be reproduced, changed, or copied in any form or manner whatsoever, nor are they to be assigned to a third party without first obtaining the written permission and consent of Provost & Pritchard Engineering Group, Inc. In the event of unauthorized reuse of these plans by a third party, the third party shall hold the firm of Provost & Pritchard Engineering Group, Inc. harmless, and shall bear the cost of Provost & Pritchard Engineering Group, Inc.'s legal fees associated with defending and enforcing these rights.

| | |
|---|---|
| ISSUE DATE: | 12-6-2010 |
| CHECKED BY: | |
| DESIGNED BY: | |
| DRAWN BY: | P&P |
| SCALE: | AS NOTED |
| DWG. NO.: | R-52 |
| SHEET | OF |

Know what's **below.** **Call** before you dig.

SEE SHEET R-52

GOLF COURSE

PT = 725+27.53

PC = 725+40.36

725+00 726+00 727+00 728+00 729+00 730+00 731+00

PT = 728+76.93

PLAZA DR.

GOLF COURSE

SEE SHEET R-54.1

36" 2"FO N67°33'14"W

STA 724+06.11 (71.39'RT)
INSTALL 22.5° ELL

STA 728+44.54 (45.57'RT)
INSTALL 22.5° ELL

N45°03'14"W 36" 2"FO

STA 731+04.65 (45.42'RT)
BEGIN PIPE CURVE

R=800.00'
L=400.00'
Δ=71°47'26"

AIRPORT

MATCH LINE
STA STA 724+00

MATCH LINE
STA STA 732+00

LEGEND

EXISTING AC

SCALE: 1"= 30'
30' 0' 30'

# PLAZA DRIVE

(STATIONING IS ALONG CENTERLINE OF STREET)

724+00 725+00 726+00 727+00 728+00 729+00 730+00 731+00 732+00

SEE SHEET R-52

SEE SHEET R-54.1

298 295 292 289 286 283 280 277 274

USGS DATUM

(E) GRADE @ STREET CENTERLINE

(E) GRADE @ 55' RT OF STREET CENTERLINE

4' COVER MIN.

INSTALL ±800LF 36"
S = X.XXXX
FLOW

INV 36"=285.79 (N,S)

INV 36"=286.44 (N,S)

MATCH LINE
STA 724+00

MATCH LINE
STA 732+00

SCALE:
VERT: 1"=3'
HORIZ: 1"=30'

NOT FOR CONSTRUCTION

| REV. | DATE | BY | DESCRIPTION |
|---|---|---|---|
| | | | |

APPROVED BY: _____ R.C.E. 47982
ENGINEERING SERVICES MANAGER FOR CITY ENGINEER
DATE: _____

APPROVED BY: _____ R.C.E. 47982
ENGINEERING SERVICES MANAGER FOR CITY ENGINEER
DATE: _____

CITY OF VISALIA
ENGINEERING DEPARTMENT
336 NORTH BEN MADDOX WAY
VISALIA CA. 93292

PARSONS
100 WEST WALNUT STREET
PASADENA, CA 91124
OFFICE: 626.440.2000
FAX: 626.440.2630
WWW.PARSONS.COM

PROJECT NAME: CITY OF VISALIA
WATER CONSERVATION PLANT UPGRADES

SHEET TITLE: RECYCLED WATER PIPELINE
PLAZA DR & WALNUT AVE
STA 724-732

PROVOST& PRITCHARD
CONSULTING GROUP
EST. 1968
An Employee Owned Company
130 NORTH GARDEN STREET
VISALIA, CALIFORNIA 93291-6362
559/636-1166 FAX 559/636-1177
www.ppeng.com

COPYRIGHT 2010 by PROVOST & PRITCHARD ENGINEERING GROUP, INC. ALL RIGHTS RESERVED
The firm of Provost & Pritchard Engineering Group, Inc. expressly reserves its common law copyright and other applicable property rights in these plans. These plans are not to be reproduced, changed, or copied in any form or manner whatsoever, nor are they to be assigned to a third party without first obtaining the written permission and consent of Provost & Pritchard Engineering Group, Inc. In the event of unauthorized reuse of these plans by a third party, the third party shall hold the firm of Provost & Pritchard Engineering Group, Inc. harmless, and shall bear the cost of Provost & Pritchard Engineering Group, Inc.'s legal fees associated with defending and enforcing these rights.

| | |
|---|---|
| ISSUE DATE: | 12-6-2010 |
| CHECKED BY: | |
| DESIGNED BY: | |
| DRAWN BY: | P&P |
| SCALE: | AS NOTED |
| DWG. NO.: | R-53 |
| SHEET | OF |

Saved by MIKEPR on 12/7/10 plotted 4/20/2010 12:19:04 PM
V:\Clients\Parsons-1979\197909V1-Visalia WCP Pipelines\DWG\SHEET\PP-PLAZA_WALNUT\197909V1-PP-STA 724-732 last saved by MIKEPR on 12/7/10 plotted 4/20/2010 12:19:04 PM
V:\Clients\Parsons-1979\197909V1-Visalia WCP Pipelines\DWG\SHEET\PP-PLAZA_WALNUT\197909V1-PP-STA 724-732.dwg Jan 05, 2011 - 4:18pm

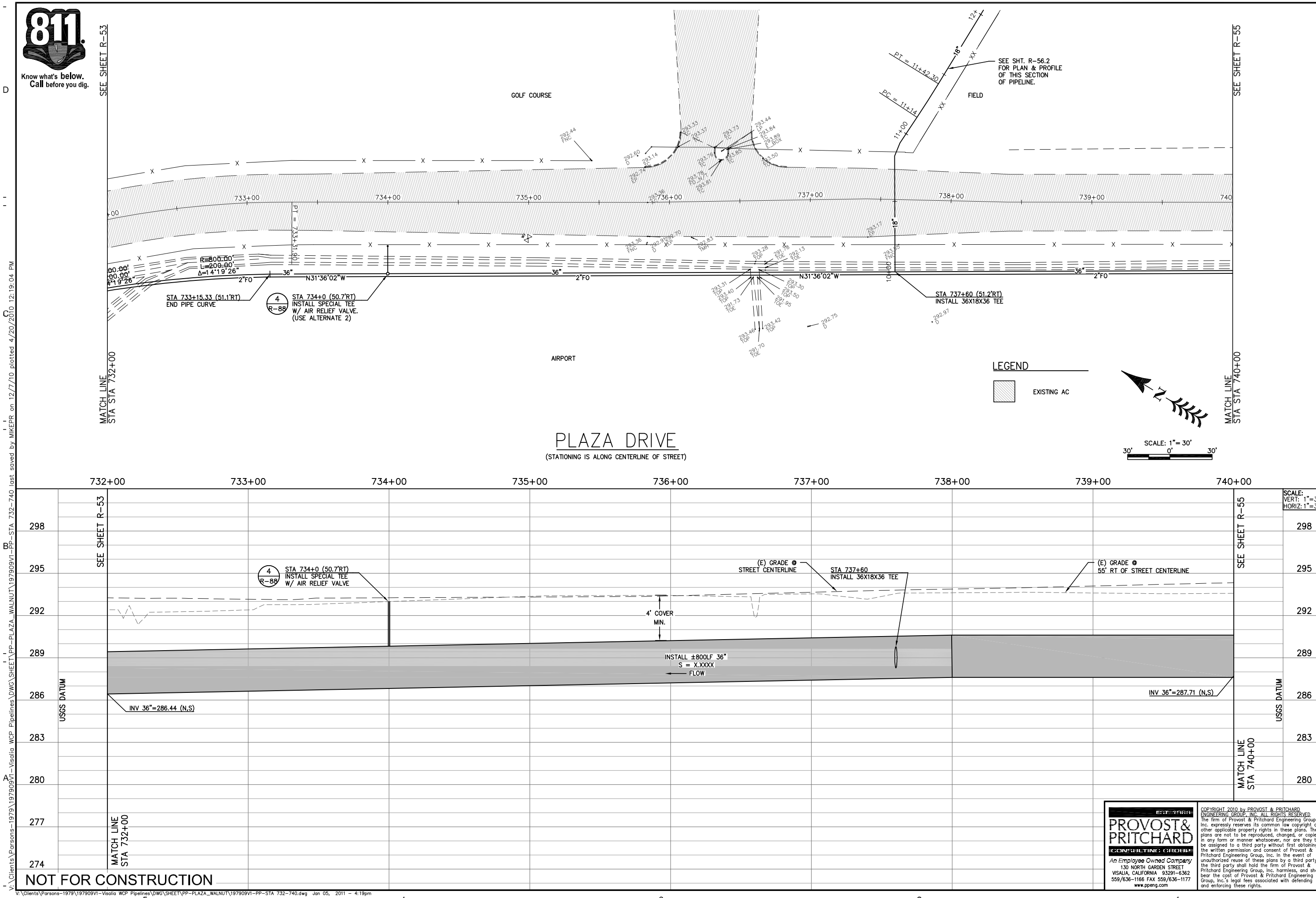


| REV. | DATE | BY | DESCRIPTION |
|---|---|---|---|

APPROVED BY: ENGINEERING SERVICES MANAGER FOR CITY ENGINEER R.C.E. C47262 DATE:

APPROVED BY: ENGINEERING SERVICES MANAGER FOR CITY ENGINEER R.C.E. C47262 DATE:

CITY OF VISALIA PUBLIC WORKS DEPARTMENT 336 NORTH BEN MADDOX WAY VISALIA CA. 93292

PARSONS
100 WEST WALNUT STREET PASADENA, CA 91124 OFFICE: 626.440.2000 FAX: 626.440.6337 WWW.PARSONS.COM

PROJECT NAME: CITY OF VISALIA WATER CONSERVATION PLANT UPGRADES

SHEET TITLE: RECYCLED WATER PIPELINE PLAZA DR & WALNUT AVE STA 732-740

ISSUE DATE: 12-6-2010
CHECKED BY:
DESIGNED BY:
DRAWN BY: P&P
SCALE: AS NOTED
DWG. NO.: R-54.1
SHEET OF

EST. 1968 PROVOST & PRITCHARD CONSULTING GROUP
An Employee Owned Company
130 NORTH GARDEN STREET VISALIA, CALIFORNIA 93291-6362 559/636-1166 FAX 559/636-1177 www.ppeng.com

COPYRIGHT 2010 by PROVOST & PRITCHARD ENGINEERING GROUP, INC. ALL RIGHTS RESERVED
The firm of Provost & Pritchard Engineering Group, Inc. expressly reserves its common law copyright and other applicable property rights in these plans. These plans are not to be reproduced, changed, or copied in any form or manner whatsoever, nor are they to be assigned to a third party without first obtaining the written permission and consent of Provost & Pritchard Engineering Group, Inc. In the event of unauthorized reuse of these plans by a third party, the third party shall hold the firm of Provost & Pritchard Engineering Group, Inc. harmless, and shall bear the cost of Provost & Pritchard Engineering Group, Inc.'s legal fees associated with defending and enforcing these rights.

V:\Clients\Parsons-1979\197909V1-Visalia WCP Pipelines\DWG\SHEET\PP-PLAZA_WALNUT\197909V1-PP-STA 732-740 last saved by MIKEPR on 12/7/10 plotted 4/20/2010 12:19:04 PM
V:\Clients\Parsons-1979\197909V1-Visalia WCP Pipelines\DWG\SHEET\PP-PLAZA_WALNUT\197909V1-PP-STA 732-740.dwg Jan 05, 2011 - 4:19pm

811
Know what's **below.**
**Call** before you dig.

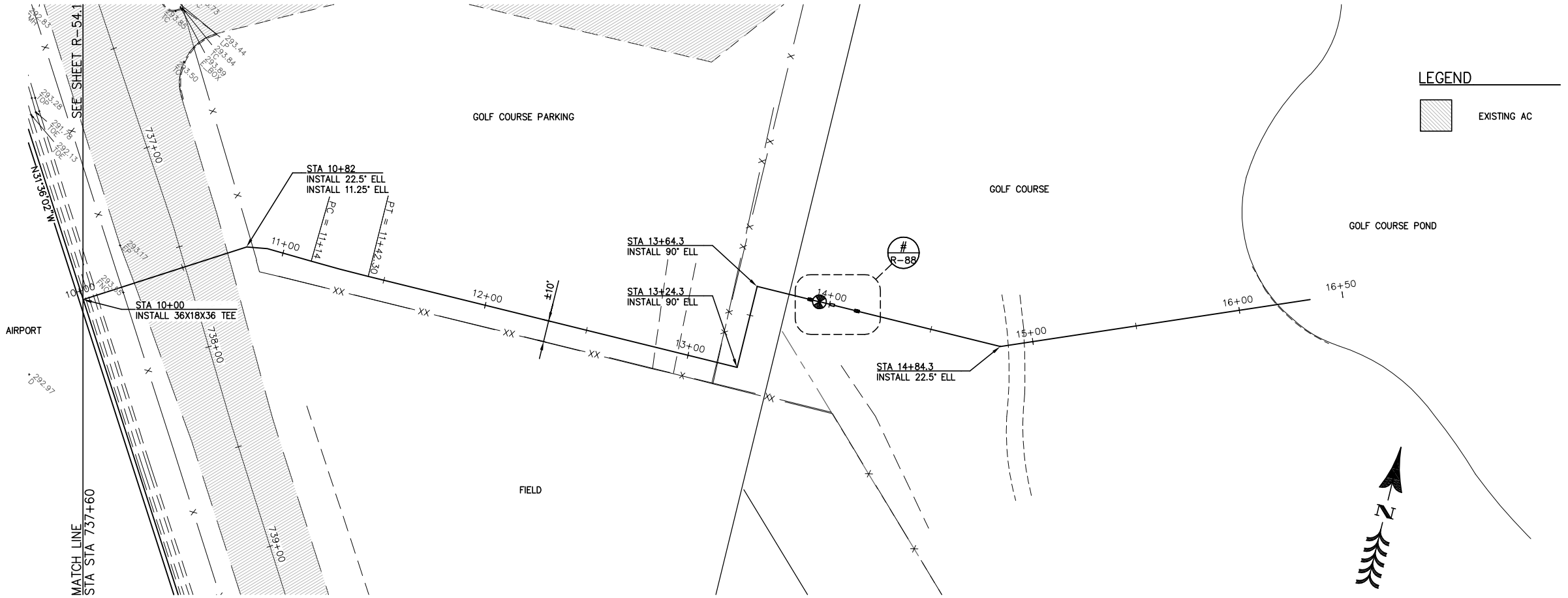


# GOLF COURSE POND 2

(STATIONING IS ALONG CENTERLINE OF PIPE)

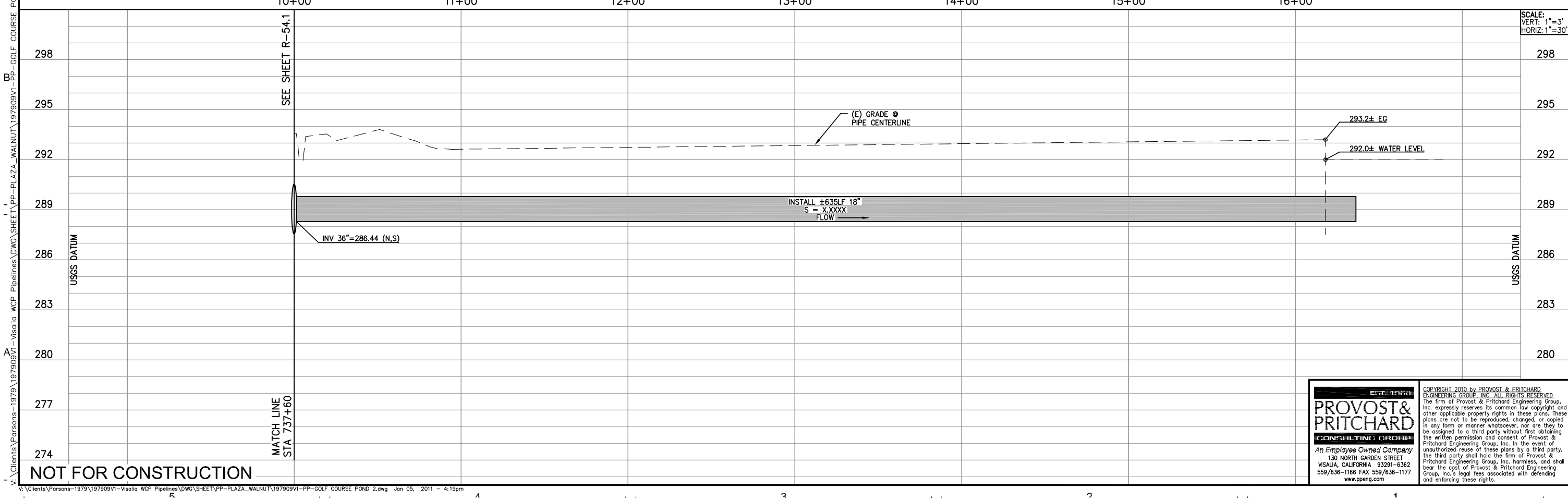


NOT FOR CONSTRUCTION

| REV. | DATE | BY | DESCRIPTION |
|---|---|---|---|
| | | | |

APPROVED BY: _____ R.C.E. 47282
ENGINEERING SERVICES MANAGER FOR CITY ENGINEER
DATE: _____

APPROVED BY: _____ R.C.E. 47282
ENGINEERING SERVICES MANAGER FOR CITY ENGINEER
DATE: _____

CITY OF VISALIA
ENGINEERING DIVISION
336 NORTH BEN MADDOX WAY
VISALIA CA. 93292

PARSONS
100 WEST WALNUT STREET
PASADENA, CA 91124
OFFICE: 626.440.2000
FAX: 626.440.2630
WWW.PARSONS.COM

PROJECT NAME: CITY OF VISALIA
WATER CONSERVATION PLANT UPGRADES

SHEET TITLE: RECYCLED WATER PIPELINE
PLAZA DR & WALNUT AVE
STA 10-16-GOLF COURSE POND 2

EST 1968
PROVOST& PRITCHARD
CONSULTING GROUP
An Employee Owned Company
130 NORTH GARDEN STREET
VISALIA, CALIFORNIA 93291-6362
559/636-1166 FAX 559/636-1177
www.ppeng.com

COPYRIGHT 2010 by PROVOST & PRITCHARD ENGINEERING GROUP, INC. ALL RIGHTS RESERVED
The firm of Provost & Pritchard Engineering Group, Inc. expressly reserves its common law copyright and other applicable property rights in these plans. These plans are not to be reproduced, changed, or copied in any form or manner whatsoever, nor are they to be assigned to a third party without first obtaining the written permission and consent of Provost & Pritchard Engineering Group, Inc. In the event of unauthorized reuse of these plans by a third party, the third party shall hold the firm of Provost & Pritchard Engineering Group, Inc. harmless, and shall bear the cost of Provost & Pritchard Engineering Group, Inc.'s legal fees associated with defending and enforcing these rights.

| | |
|---|---|
| ISSUE DATE: | 12-6-2010 |
| CHECKED BY: | |
| DESIGNED BY: | |
| DRAWN BY: | P&P |
| SCALE: | AS NOTED |
| DWG. NO.: | R-54.2 |
| SHEET | OF |

V:\Clients\Parsons-1979\197909V1-Visalia WCP Pipelines\DWG\SHEET\PP-PLAZA_WALNUT\197909V1-PP-GOLF COURSE POND 2 last saved by MIKEPR on 12/7/10 plotted 9/20/2010 6:47:58 AM

V:\Clients\Parsons-1979\197909V1-Visalia WCP Pipelines\DWG\SHEET\PP-PLAZA_WALNUT\197909V1-PP-GOLF COURSE POND 2.dwg Jan 05, 2011 - 4:19pm

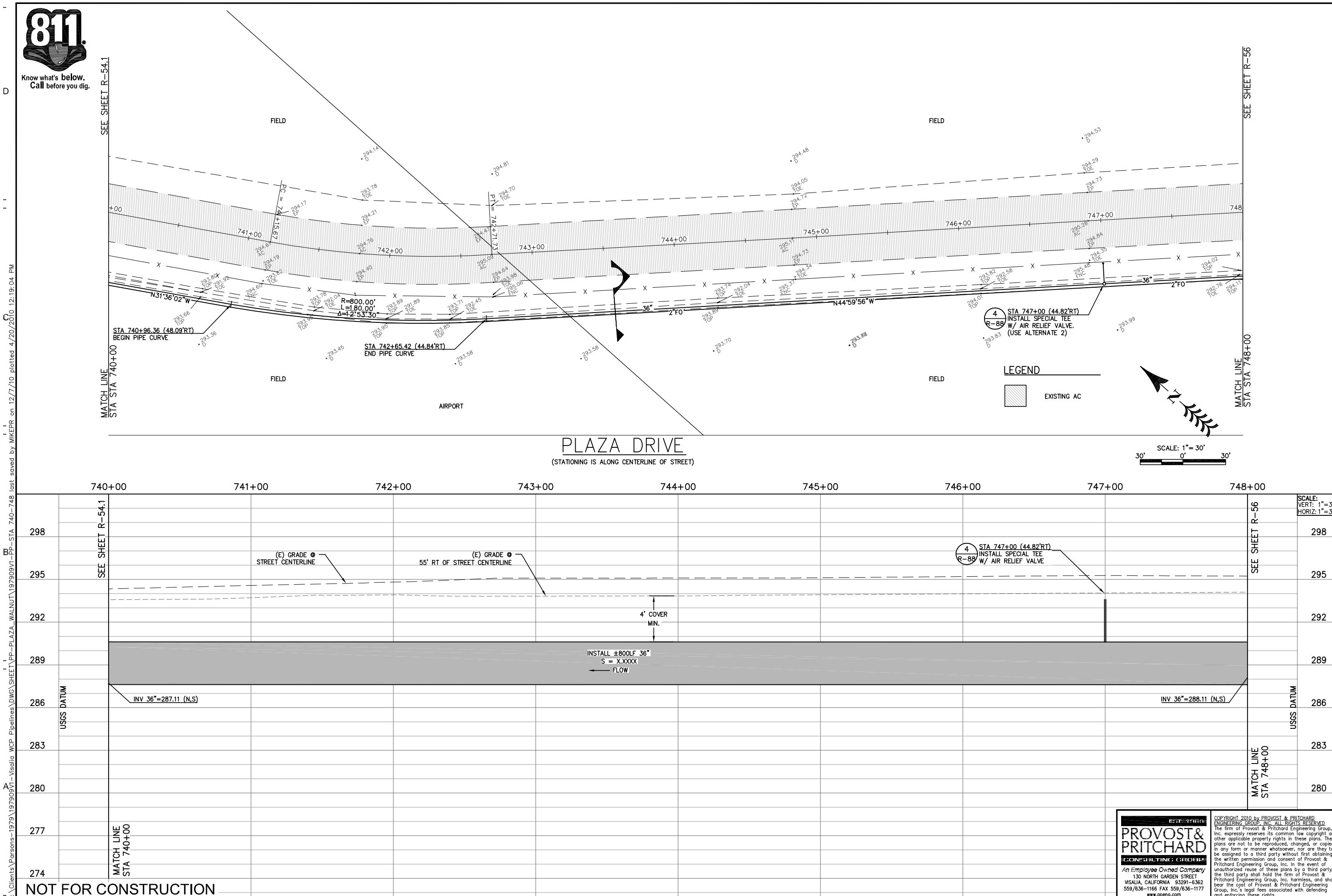


NOT FOR CONSTRUCTION

| REV. | DATE | BY | DESCRIPTION |
|---|---|---|---|

APPROVED BY: R.C.E. C47262
ENGINEERING SERVICES MANAGER FOR CITY ENGINEER
DATE:

APPROVED BY: R.C.E. C47262
ENGINEERING SERVICES MANAGER FOR CITY ENGINEER
DATE:

CITY OF VISALIA
PUBLIC WORKS DEPARTMENT
336 NORTH BEN MADDOX WAY
VISALIA CA. 93292

PARSONS
100 WEST WALNUT STREET
PASADENA, CA 91124
OFFICE: 626.440.2000
FAX: 626.440.6337
WWW.PARSONS.COM

PROJECT NAME: CITY OF VISALIA
WATER CONSERVATION PLANT UPGRADES

SHEET TITLE: RECYCLED WATER PIPELINE
PLAZA DR & WALNUT AVE
STA 740-748

EST. 1968
PROVOST & PRITCHARD
CONSULTING GROUP
An Employee Owned Company
130 NORTH GARDEN STREET
VISALIA, CALIFORNIA 93291-6362
559/636-1166 FAX 559/636-1177
www.ppeng.com

COPYRIGHT 2010 by PROVOST & PRITCHARD ENGINEERING GROUP, INC. ALL RIGHTS RESERVED
The firm of Provost & Pritchard Engineering Group, Inc. expressly reserves its common law copyright and other applicable property rights in these plans. These plans are not to be reproduced, changed, or copied in any form or manner whatsoever, nor are they to be assigned to a third party without first obtaining the written permission and consent of Provost & Pritchard Engineering Group, Inc. In the event of unauthorized reuse of these plans by a third party, the third party shall hold the firm of Provost & Pritchard Engineering Group, Inc. harmless, and shall bear the cost of Provost & Pritchard Engineering Group, Inc.'s legal fees associated with defending and enforcing these rights.

| | |
|---|---|
| ISSUE DATE: | 12-6-2010 |
| CHECKED BY: | |
| DESIGNED BY: | |
| DRAWN BY: | P&P |
| SCALE: | AS NOTED |
| DWG. NO.: | R-55 |
| SHEET | OF |

V:\Clients\Parsons-1979\197909V1-Visalia WCP Pipelines\DWG\SHEET\PP-PLAZA_WALNUT\197909V1-PP-STA 740-748 last saved by MIKEPR on 12/7/10 plotted 4/20/2010 12:19:04 PM
V:\Clients\Parsons-1979\197909V1-Visalia WCP Pipelines\DWG\SHEET\PP-PLAZA_WALNUT\197909V1-PP-STA 740-748.dwg Jan 05, 2011 - 4:19pm

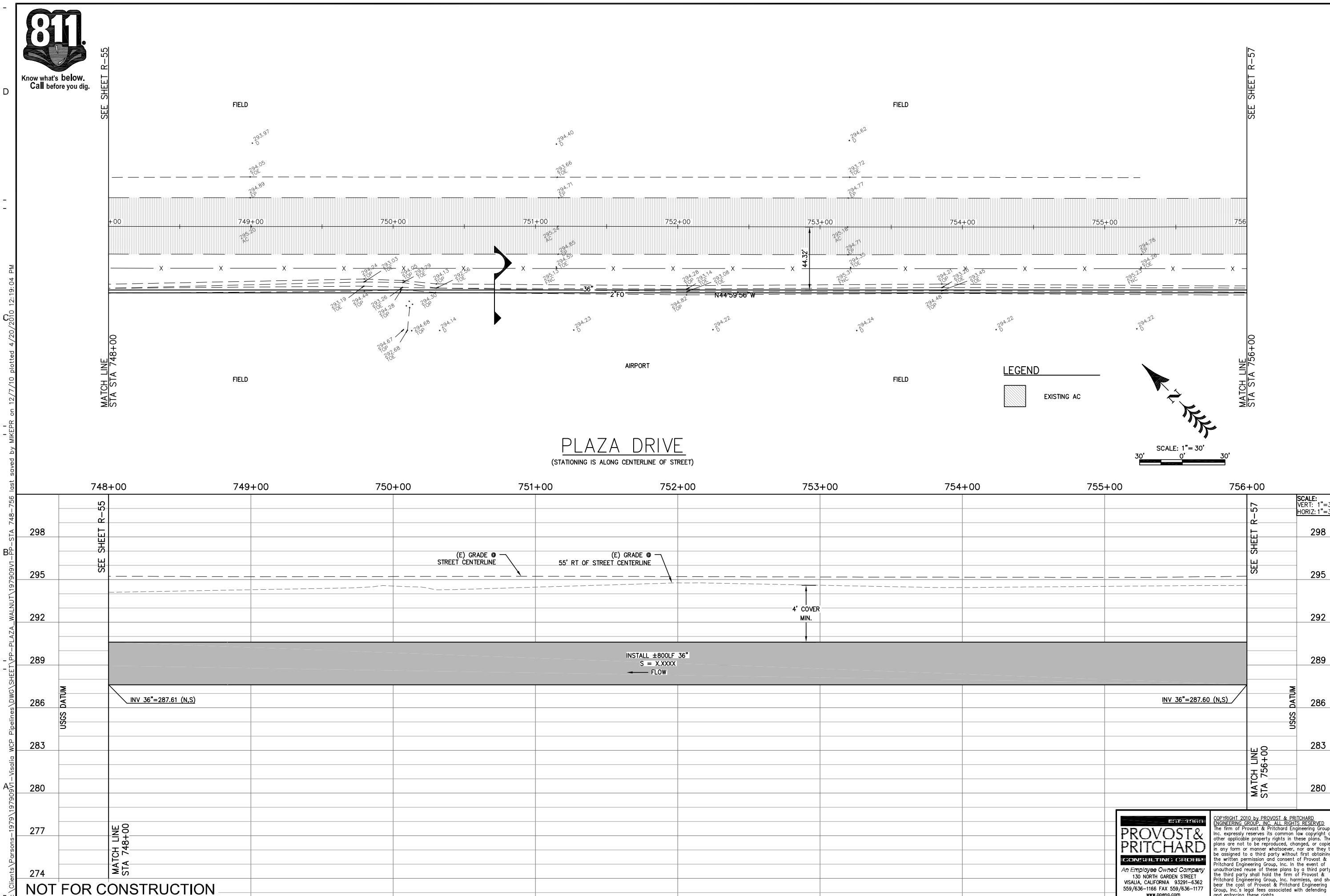


APPROVED BY: ENGINEERING SERVICES MANAGER FOR CITY ENGINEER R.C.E. C47262 DATE:

APPROVED BY: ENGINEERING SERVICES MANAGER FOR CITY ENGINEER R.C.E. C47262 DATE:

CITY OF VISALIA PUBLIC WORKS DEPARTMENT 336 NORTH BEN MADDOX WAY VISALIA CA. 93292

PARSONS
100 WEST WALNUT STREET
PASADENA, CA 91124
OFFICE: 626.440.2000
FAX: 626.440.6337
WWW.PARSONS.COM

PROJECT NAME: CITY OF VISALIA WATER CONSERVATION PLANT UPGRADES

SHEET TITLE: RECYCLED WATER PIPELINE PLAZA DR & WALNUT AVE STA 748-756

| REV. | DATE | BY | DESCRIPTION |
|---|---|---|---|

EST. 1968
PROVOST & PRITCHARD CONSULTING GROUP
An Employee Owned Company
130 NORTH GARDEN STREET
VISALIA, CALIFORNIA 93291-6362
559/636-1166 FAX 559/636-1177
www.ppeng.com

COPYRIGHT 2010 by PROVOST & PRITCHARD ENGINEERING GROUP, INC. ALL RIGHTS RESERVED
The firm of Provost & Pritchard Engineering Group, Inc. expressly reserves its common law copyright and other applicable property rights in these plans. These plans are not to be reproduced, changed, or copied in any form or manner whatsoever, nor are they to be assigned to a third party without first obtaining the written permission and consent of Provost & Pritchard Engineering Group, Inc. In the event of unauthorized reuse of these plans by a third party, the third party shall hold the firm of Provost & Pritchard Engineering Group, Inc. harmless, and shall bear the cost of Provost & Pritchard Engineering Group, Inc.'s legal fees associated with defending and enforcing these rights.

| | |
|---|---|
| ISSUE DATE: | 12-6-2010 |
| CHECKED BY: | |
| DESIGNED BY: | |
| DRAWN BY: | P&P |
| SCALE: | AS NOTED |
| DWG. NO.: | R-56 |
| SHEET | OF |

V:\Clients\Parsons-1979\197909V1-Visalia WCP Pipelines\DWG\SHEET\PP-PLAZA_WALNUT\197909V1-PP-STA 748-756 last saved by MIKEPR on 12/7/10 plotted 4/20/2010 12:19:04 PM
V:\Clients\Parsons-1979\197909V1-Visalia WCP Pipelines\DWG\SHEET\PP-PLAZA_WALNUT\197909V1-PP-STA 748-756.dwg Jan 05, 2011 - 4:20pm

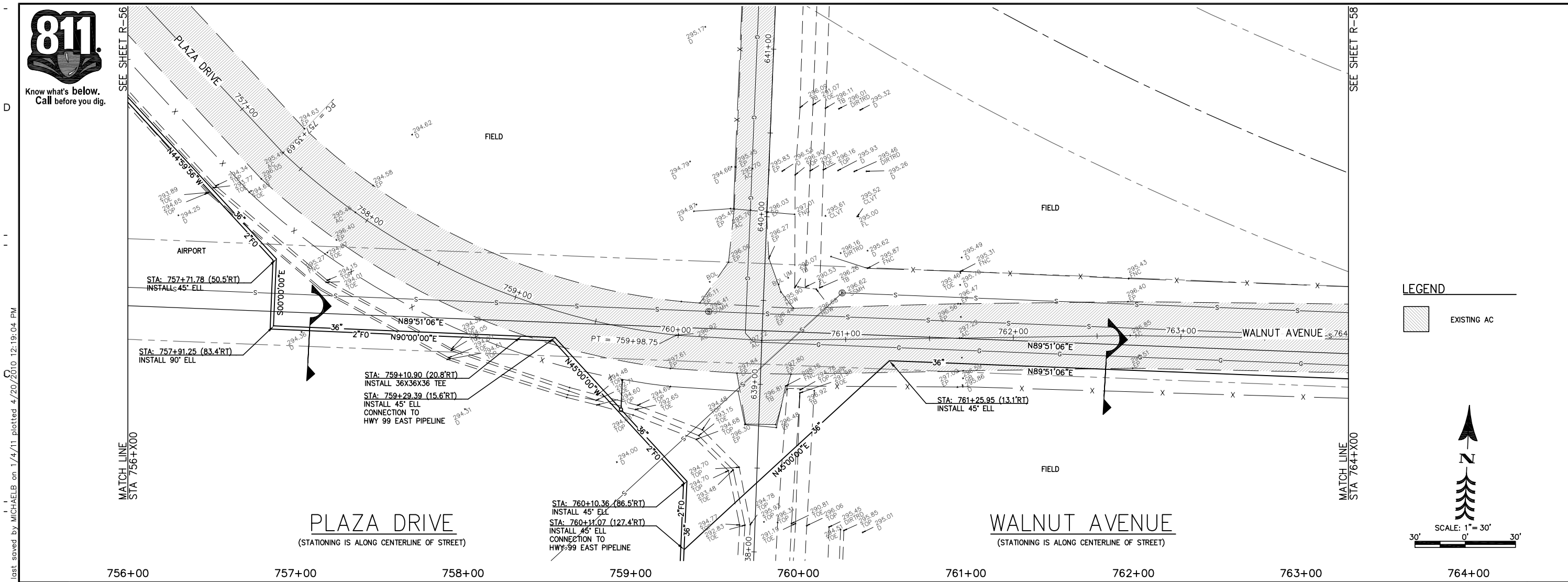


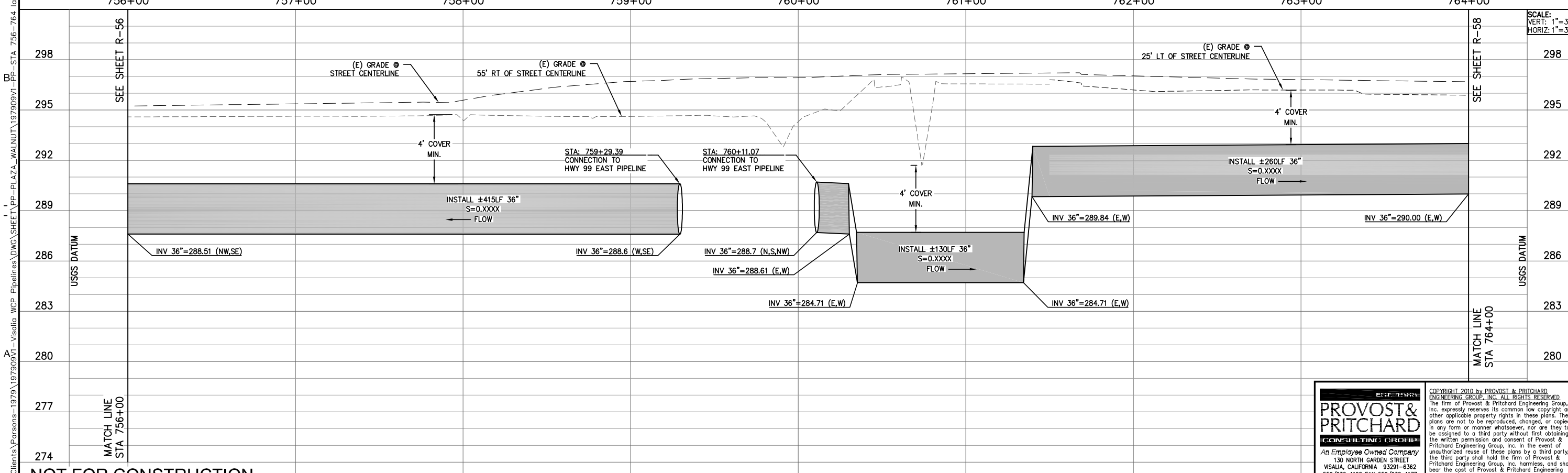


NOT FOR CONSTRUCTION

V:\Clients\Parsons-1979\197909V1-Visalia WCP Pipelines\DWG\SHEET\PP-PLAZA_WALNUT\197909V1-PP-STA 756-764.dwg Jan 05, 2011 - 4:20pm

| REV. | DATE | BY | DESCRIPTION |
|---|---|---|---|

APPROVED BY: R.C.E. C47282
ENGINEERING SERVICES MANAGER FOR CITY ENGINEER
DATE:

APPROVED BY: R.C.E. C47282
ENGINEERING SERVICES MANAGER FOR CITY ENGINEER
DATE:

CITY OF VISALIA
PUBLIC WORKS DEPARTMENT
336 NORTH BEN MADDOX WAY
VISALIA CA. 93292

PARSONS
100 WEST WALNUT STREET
PASADENA, CA 91124
OFFICE: 626.440.2000
FAX: 626.440.6337
WWW.PARSONS.COM

PROJECT NAME: CITY OF VISALIA
WATER CONSERVATION PLANT UPGRADES

SHEET TITLE: RECYCLED WATER PIPELINE
PLAZA DR & WALNUT AVE
STA 756-764

EST. 1968
PROVOST & PRITCHARD
CONSULTING GROUP
An Employee Owned Company
130 NORTH GARDEN STREET
VISALIA, CALIFORNIA 93291-6362
559/636-1166 FAX 559/636-1177
www.ppeng.com

COPYRIGHT 2010 by PROVOST & PRITCHARD ENGINEERING GROUP, INC. ALL RIGHTS RESERVED
The firm of Provost & Pritchard Engineering Group, Inc. expressly reserves its common law copyright and other applicable property rights in these plans. These plans are not to be reproduced, changed, or copied in any form or manner whatsoever, nor are they to be assigned to a third party without first obtaining the written permission and consent of Provost & Pritchard Engineering Group, Inc. In the event of unauthorized reuse of these plans by a third party, the third party shall hold the firm of Provost & Pritchard Engineering Group, Inc. harmless, and shall bear the cost of Provost & Pritchard Engineering Group, Inc.'s legal fees associated with defending and enforcing these rights.

| | |
|---|---|
| ISSUE DATE: | 12-6-2010 |
| CHECKED BY: | |
| DESIGNED BY: | |
| DRAWN BY: | P&P |
| SCALE: | AS NOTED |
| DWG. NO.: | R-57 |
| SHEET | OF |

V:\Clients\Parsons-1979\197909V1-Visalia WCP Pipelines\DWG\SHEET\PP-PLAZA_WALNUT\197909V1-PP-STA 756-764 last saved by MICHAELB on 1/4/11 plotted 4/20/2010 12:19:04 PM

Know what's **below.** **Call** before you dig.

SEE SHEET R-57

MATCH LINE STA STA 764+00

FIELD

STA 466+80.80 (PROTECT MONUMENT IN PLACE)

MON

N89°51'06"E

INSTALL 36" 90° ELL

INSTALL ±32LF 36" PVC

INSTALL 36" 90° ELL

SECTION LINE

R/W

25'

110'

60'

36"

15'

7.3'

765+00 766+00 767+00 768+00 769+00 770+00 771+00 772

SEE SHEET R-59

MATCH LINE STA STA 772+00

FIELD

LEGEND

EXISTING AC

SCALE: 1"= 30'

30' 0' 30'

# WALNUT AVENUE

(STATIONING IS ALONG CENTERLINE OF STREET)

764+00 765+00 766+00 767+00 768+00 769+00 770+00 771+00 772+00

SEE SHEET R-57

MATCH LINE STA 764+00

USGS DATUM

298 295 292 289 286 283 280 277 274

(E) GRADE @ STREET CENTERLINE

(E) GRADE @ 25' RT OF STREET CENTERLINE

4' COVER MIN.

INSTALL ±350LF 36" PVC
S=0.XXXX
FLOW →

INSTALL ±450LF 36" PVC
S=0.XXXX
FLOW →

INV 36"=290.00 (E,W)

INV 36"=290.51 (E,W)

SCALE:
VERT: 1"=3'
HORIZ: 1"=30'

NOT FOR CONSTRUCTION

| REV. | DATE | BY | DESCRIPTION |
|---|---|---|---|
| | | | |

APPROVED BY: R.C.E. 47282
ENGINEERING SERVICES MANAGER FOR CITY ENGINEER
DATE:

APPROVED BY: R.C.E. 47282
ENGINEERING SERVICES MANAGER FOR CITY ENGINEER
DATE:

CITY OF VISALIA
ENGINEERING DEPARTMENT
336 NORTH BEN MADDOX WAY
VISALIA CA. 93292


PARSONS
100 WEST WALNUT STREET
PASADENA, CA 91124
OFFICE: (626.440.2000
FAX: (626.440.2630
WWW.PARSONS.COM


PROJECT NAME: CITY OF VISALIA
WATER CONSERVATION PLANT UPGRADES

SHEET TITLE: RECYCLED WATER PIPELINE
PLAZA DR & WALNUT AVE
STA 764-772


EST. 1971
PROVOST& PRITCHARD
CONSULTING GROUP
An Employee Owned Company
130 NORTH GARDEN STREET
VISALIA, CALIFORNIA 93291-6362
559/636-1166 FAX 559/636-1177
www.ppeng.com



COPYRIGHT 2010 by PROVOST & PRITCHARD ENGINEERING GROUP, INC. ALL RIGHTS RESERVED.
The firm of Provost & Pritchard Engineering Group, Inc. expressly reserves its common law copyright and other applicable property rights in these plans. These plans are not to be reproduced, changed, or copied in any form or manner whatsoever, nor are they to be assigned to a third party without first obtaining the written permission and consent of Provost & Pritchard Engineering Group, Inc. In the event of unauthorized reuse of these plans by a third party, the third party shall hold the firm of Provost & Pritchard Engineering Group, Inc. harmless, and shall bear the cost of Provost & Pritchard Engineering Group, Inc.'s legal fees associated with defending and enforcing these rights.


| | |
|---|---|
| ISSUE DATE: | 12-6-2010 |
| CHECKED BY: | |
| DESIGNED BY: | |
| DRAWN BY: | P&P |
| SCALE: | AS NOTED |
| DWG. NO.: | R-58 |
| SHEET | OF |


last saved by MIKEPR on 12/15/10 plotted 4/20/2010 12:19:04 PM
V:\Clients\Parsons-1979\197909V1-Visalia WCP Pipelines\DWG\SHEET\PP-PLAZA_WALNUT\197909V1-PP-STA 764-772 last saved
V:\Clients\Parsons-1979\197909V1-Visalia WCP Pipelines\DWG\SHEET\PP-PLAZA_WALNUT\197909V1-PP-STA 764-772.dwg Jan 05, 2011 - 4:21pm

Know what's **below.** **Call** before you dig.

SEE SHEET R-58

MATCH LINE
STA STA 772+00

FIELD

SECTION LINE

4 R-88
STA 773+00.0 (7.00'LT)
INSTALL SPECIAL TEE
W/ AIR RELIEF VALVE

STA 773+71.23 (10.30'RT)
INTERSECTION OF SECTION LINES
(PROTECT MONUMENT IN PLACE)

N89°51'06"E 36"

N89°51'06"E 36"

INSTALL ±32LF 36" PVC

INSTALL 36" 90° ELL

INSTALL 36" 90° ELL

N89°51'20"E 15'

N89°51'06"E 36"

FIELD

FIELD

SEE SHEET R-60

MATCH LINE
STA STA 780+00

772+00 773+00 774+00 775+00 776+00 777+00 778+00 779+00 780

## WALNUT AVENUE

(STATIONING IS ALONG CENTERLINE OF STREET)

LEGEND

EXISTING AC

N

SCALE: 1"= 30'
30' 0' 30'

772+00 773+00 774+00 775+00 776+00 777+00 778+00 779+00 780+00

SEE SHEET R-58

MATCH LINE
STA 772+00

STA 773+00.0 (7.00'LT)
INSTALL SPECIAL TEE
W/ AIR RELIEF VALVE
4 R-88

(E) GRADE @ STREET CENTERLINE

(E) GRADE @ 25' RT OF STREET CENTERLINE

4' COVER MIN.

INSTALL ±300LF 36" PVC
S=0.XXXX
FLOW

INSTALL ±500LF 36" PVC
S=0.XXXX
FLOW

INV 36"=290.51 (E,W)

INV 36"=291.02 (E,W)

298 295 292 289 286 283 280 277 274

USGS DATUM

SEE SHEET R-60

MATCH LINE
STA 780+00

SCALE:
VERT: 1"=3'
HORIZ: 1"=30'

NOT FOR CONSTRUCTION

| REV. | DATE | BY | DESCRIPTION |
|---|---|---|---|
| | | | |

APPROVED BY:
ENGINEERING SERVICES MANAGER FOR CITY ENGINEER
R.C.E. 047282
DATE:

APPROVED BY:
ENGINEERING SERVICES MANAGER FOR CITY ENGINEER
R.C.E. 047282
DATE:

CITY OF VISALIA
PUBLIC WORKS DEPARTMENT
336 NORTH BEN MADDOX WAY
VISALIA CA. 93292

PARSONS
100 WEST WALNUT STREET
PASADENA, CA 91124
OFFICE: 626.440.2000
FAX: 626.440.2630
WWW.PARSONS.COM

PROJECT NAME:
CITY OF VISALIA
WATER CONSERVATION PLANT UPGRADES

SHEET TITLE:
RECYCLED WATER PIPELINE
PLAZA DR & WALNUT AVE
STA 772-780

PROVOST & PRITCHARD CONSULTING GROUP
EST. 1968
An Employee Owned Company
130 NORTH GARDEN STREET
VISALIA, CALIFORNIA 93291-6362
559/636-1166 FAX 559/636-1177
www.ppeng.com

COPYRIGHT 2010 by PROVOST & PRITCHARD ENGINEERING GROUP, INC. ALL RIGHTS RESERVED
The firm of Provost & Pritchard Engineering Group, Inc. expressly reserves its common law copyright and other applicable property rights in these plans. These plans are not to be reproduced, changed, or copied in any form or manner whatsoever, nor are they to be assigned to a third party without first obtaining the written permission and consent of Provost & Pritchard Engineering Group, Inc. In the event of unauthorized reuse of these plans by a third party, the third party shall hold the firm of Provost & Pritchard Engineering Group, Inc. harmless, and shall bear the cost of Provost & Pritchard Engineering Group, Inc.'s legal fees associated with defending and enforcing these rights.

| | |
|---|---|
| ISSUE DATE: | 12-6-2010 |
| CHECKED BY: | |
| DESIGNED BY: | |
| DRAWN BY: | P&P |
| SCALE: | AS NOTED |
| DWG. NO.: | R-59 |
| SHEET | OF |

Reviewed by MIKEPR on 12/15/10 plotted 4/20/2010 12:19:04 PM last saved by MIKEPR on 12/15/10 plotted 4/20/2010 12:19:04 PM

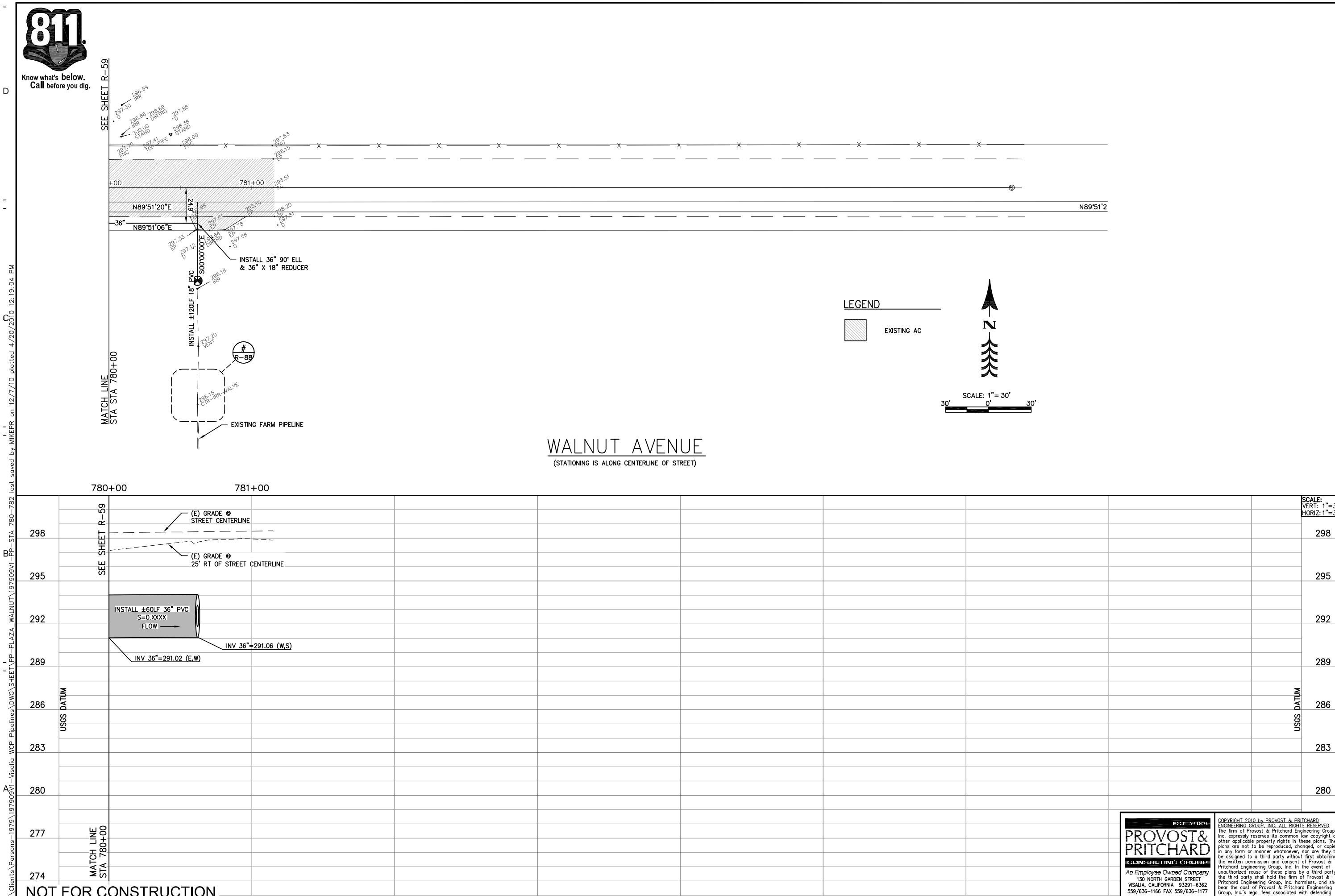


NOT FOR CONSTRUCTION

| REV. | DATE | BY | DESCRIPTION |
|---|---|---|---|

APPROVED BY: R.C.E. C47282
ENGINEERING SERVICES MANAGER FOR CITY ENGINEER
DATE:

APPROVED BY: R.C.E. C47282
ENGINEERING SERVICES MANAGER FOR CITY ENGINEER
DATE:

CITY OF VISALIA
PUBLIC WORKS DEPARTMENT
336 NORTH BEN MADDOX WAY
VISALIA CA. 93292

PARSONS
100 WEST WALNUT STREET
PASADENA, CA 91124
OFFICE: 626.440.2000
FAX: 626.440.6337
WWW.PARSONS.COM

PROJECT NAME: CITY OF VISALIA
WATER CONSERVATION PLANT UPGRADES

SHEET TITLE: RECYCLED WATER PIPELINE
PLAZA DR & WALNUT AVE
STA 780-END

EST. 1968
PROVOST & PRITCHARD
CONSULTING GROUP
An Employee Owned Company
130 NORTH GARDEN STREET
VISALIA, CALIFORNIA 93291-6362
559/636-1166 FAX 559/636-1177
www.ppeng.com

COPYRIGHT 2010 by PROVOST & PRITCHARD ENGINEERING GROUP, INC. ALL RIGHTS RESERVED
The firm of Provost & Pritchard Engineering Group, Inc. expressly reserves its common law copyright and other applicable property rights in these plans. These plans are not to be reproduced, changed, or copied in any form or manner whatsoever, nor are they to be assigned to a third party without first obtaining the written permission and consent of Provost & Pritchard Engineering Group, Inc. In the event of unauthorized reuse of these plans by a third party, the third party shall hold the firm of Provost & Pritchard Engineering Group, Inc. harmless, and shall bear the cost of Provost & Pritchard Engineering Group, Inc.'s legal fees associated with defending and enforcing these rights.

| | |
|---|---|
| ISSUE DATE: | 12-6-2010 |
| CHECKED BY: | |
| DESIGNED BY: | |
| DRAWN BY: | P&P |
| SCALE: | AS NOTED |
| DWG. NO.: | R-60 |
| SHEET | OF |

V:\Clients\Parsons-1979\197909V1-Visalia WCP Pipelines\DWG\SHEET\PP-PLAZA_WALNUT\197909V1-PP-STA 780-782 last saved by MIKEPR on 12/7/10 plotted 4/20/2010 12:19:04 PM

V:\Clients\Parsons-1979\197909V1-Visalia WCP Pipelines\DWG\SHEET\PP-PLAZA_WALNUT\197909V1-PP-STA 780-782.dwg Jan 05, 2011 - 4:22pm

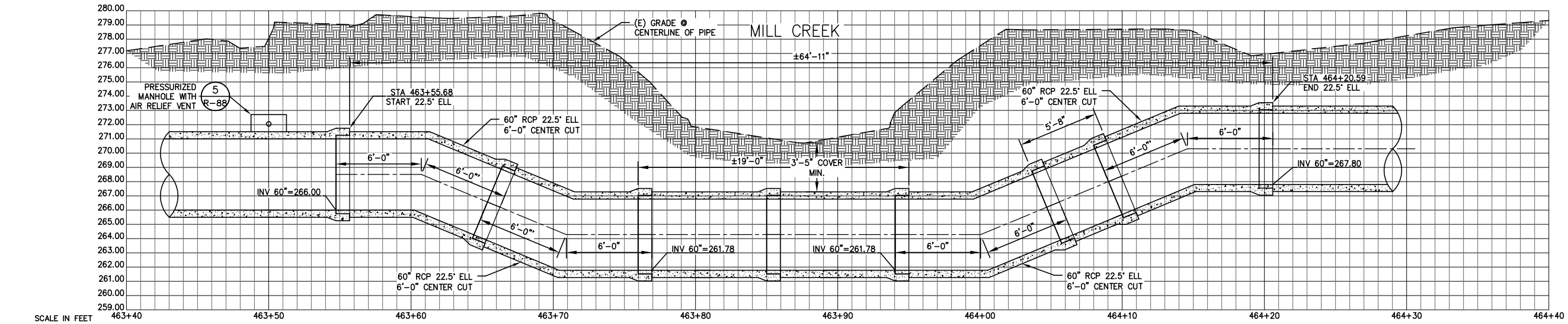


1
R-61

SECTION VIEW

MILL CREEK SIPHON @ RD 68

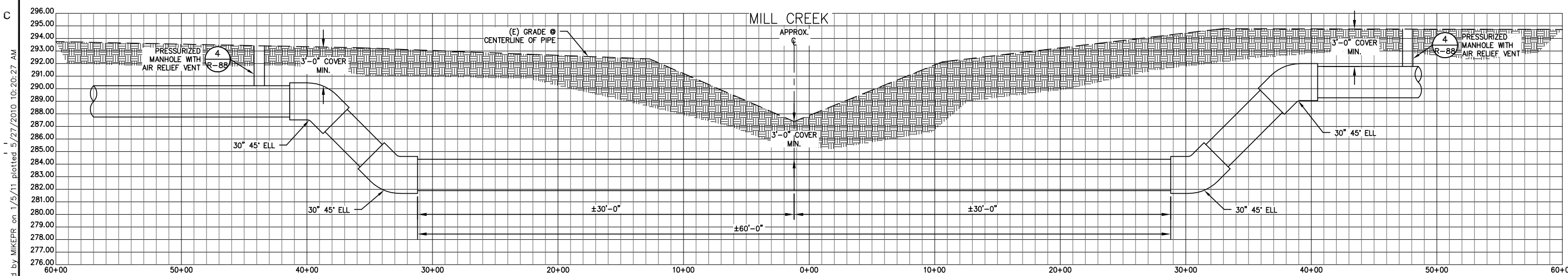


2
R-61

SECTION VIEW

MILL CREEK SIPHON @ PLAZA DRIVE

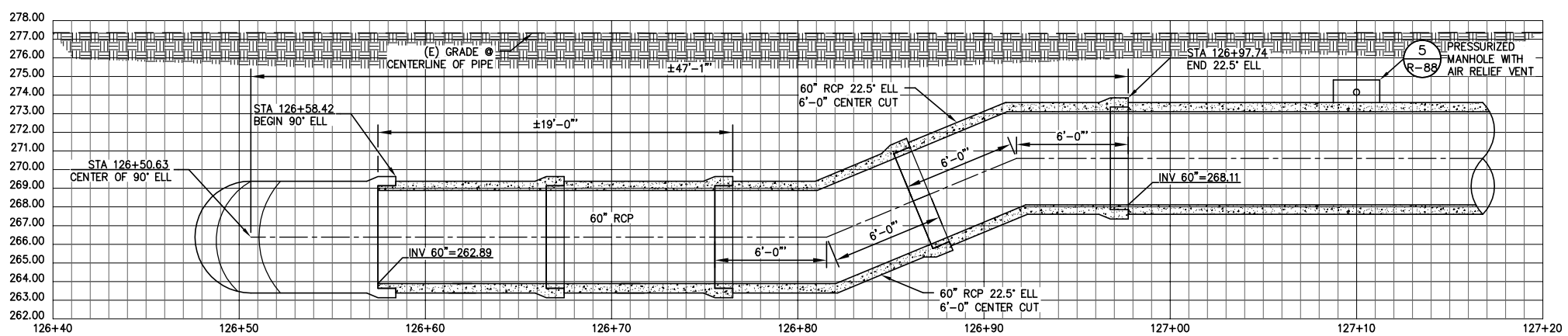


3
R-61

SECTION VIEW

ROAD 68 TO AVENUE 268 TRANSITION

NOT FOR CONSTRUCTION

| REV. | DATE | BY | DESCRIPTION |
|---|---|---|---|
| | | | |

APPROVED BY: _____ R.C.E. 047982
ENGINEERING SERVICES MANAGER FOR CITY ENGINEER
DATE: _____

APPROVED BY: _____ R.C.E. 047982
ENGINEERING SERVICES MANAGER FOR CITY ENGINEER
DATE: _____

CITY OF VISALIA
ENGINEERING DEPARTMENT
ENGINEERING SERVICES
336 NORTH BEN MADDOX WAY
VISALIA CA. 93292

PARSONS
100 WEST WALNUT STREET
PASADENA, CA 91124
OFFICE: 626.440.2000
FAX: 626.440.2630
WWW.PARSONS.COM

PROJECT NAME: CITY OF VISALIA
WATER CONSERVATION PLANT UPGRADES

SHEET TITLE: RECYCLED WATER PIPELINE
SECTIONS
SECTIONS 1

EST. 1968
PROVOST & PRITCHARD
CONSULTING GROUP
An Employee Owned Company
130 NORTH GARDEN STREET
VISALIA, CALIFORNIA 93291-6362
559/636-1166 FAX 559/636-1177
www.ppeng.com

COPYRIGHT 2010 by PROVOST & PRITCHARD ENGINEERING GROUP, INC. ALL RIGHTS RESERVED
The firm of Provost & Pritchard Engineering Group, Inc. expressly reserves its common law copyright and other applicable property rights in these plans. These plans are not to be reproduced, changed, or copied in any form or manner whatsoever, nor are they to be assigned to a third party without first obtaining the written permission and consent of Provost & Pritchard Engineering Group, Inc. In the event of unauthorized reuse of these plans by a third party, the third party shall hold the firm of Provost & Pritchard Engineering Group, Inc. harmless, and shall bear the cost of Provost & Pritchard Engineering Group, Inc.'s legal fees associated with defending and enforcing these rights.

| | |
|---|---|
| ISSUE DATE: | 12-6-2010 |
| CHECKED BY: | |
| DESIGNED BY: | |
| DRAWN BY: | P&P |
| SCALE: | AS NOTED |
| DWG. NO.: | R-61 |
| SHEET | OF |

V:\Clients\Parsons-1979\197909V1-Visalia WCP Pipelines\DWG\SHEET\197909V1-DT-SECTIONS 1.dwg Jan 05, 2011 - 4:23pm
Plotted 5/27/2010 10:20:27 AM by MIKEPR on 1/5/11 last saved V:\Clients\Parsons-1979\197909V1-Visalia WCP Pipelines\DWG\SHEET\197909V1-DT-SECTIONS 1

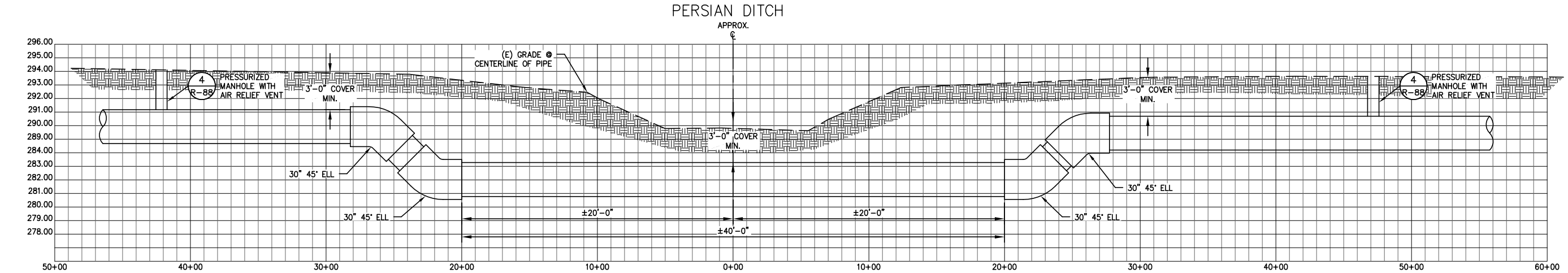


SECTION VIEW

1 R-62

PERSIAN DITCH SIPHON @ PLAZA DRIVE

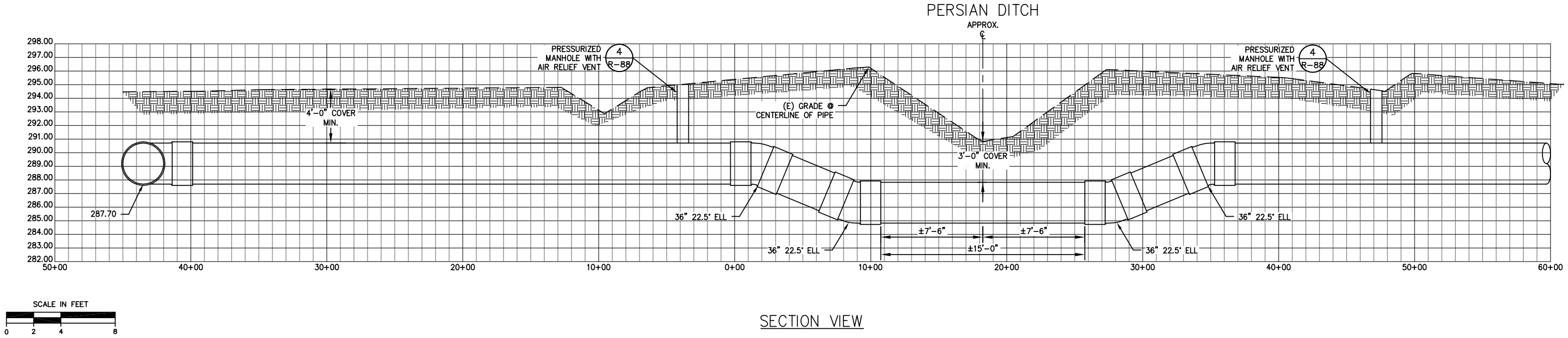


SECTION VIEW

2 R-62

PERSIAN DITCH SIPHON @ WALNUT AVENUE

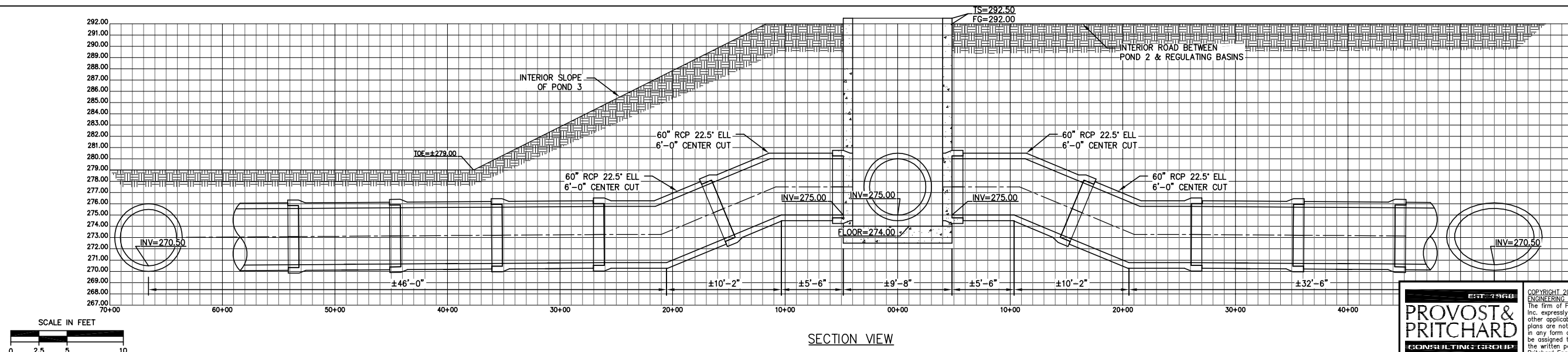


SECTION VIEW

3 R-62

STA 516+00 DISTRIBUTION BOX

NOT FOR CONSTRUCTION

| REV. | DATE | BY | DESCRIPTION |
|---|---|---|---|

APPROVED BY: ENGINEERING SERVICES MANAGER FOR CITY ENGINEER R.C.E. C47282 DATE:

APPROVED BY: ENGINEERING SERVICES MANAGER FOR CITY ENGINEER R.C.E. C47282 DATE:

CITY OF VISALIA PUBLIC WORKS DEPARTMENT 336 NORTH BEN MADDOX WAY VISALIA CA. 93292

PARSONS
100 WEST WALNUT STREET PASADENA, CA 91124 OFFICE: 626.440.2000 FAX: 626.440.6337 WWW.PARSONS.COM

PROJECT NAME: CITY OF VISALIA WATER CONSERVATION PLANT UPGRADES

SHEET TITLE: RECYCLED WATER PIPELINE SECTIONS SECTIONS 2

EST. 1968 PROVOST & PRITCHARD CONSULTING GROUP
An Employee Owned Company
130 NORTH GARDEN STREET VISALIA, CALIFORNIA 93291-6362 559/636-1166 FAX 559/636-1177 www.ppeng.com

COPYRIGHT 2010 by PROVOST & PRITCHARD ENGINEERING GROUP, INC. ALL RIGHTS RESERVED
The firm of Provost & Pritchard Engineering Group, Inc. expressly reserves its common law copyright and other applicable property rights in these plans. These plans are not to be reproduced, changed, or copied in any form or manner whatsoever, nor are they to be assigned to a third party without first obtaining the written permission and consent of Provost & Pritchard Engineering Group, Inc. In the event of unauthorized reuse of these plans by a third party, the third party shall hold the firm of Provost & Pritchard Engineering Group, Inc. harmless, and shall bear the cost of Provost & Pritchard Engineering Group, Inc.'s legal fees associated with defending and enforcing these rights.

| | |
|---|---|
| ISSUE DATE: | 12-6-2010 |
| CHECKED BY: | |
| DESIGNED BY: | |
| DRAWN BY: | P&P |
| SCALE: | AS NOTED |
| DWG. NO.: | R-62 |
| SHEET | OF |

V:\Clients\Parsons-1979\197909V1-Visalia WCP Pipelines\DWG\SHEET\197909V1-DT-SECTIONS 2 last saved by MIKEPR on 1/5/11 plotted 12/9/2010 11:03:28 AM
V:\Clients\Parsons-1979\197909V1-Visalia WCP Pipelines\DWG\SHEET\197909V1-DT-SECTIONS 2.dwg Jan 05, 2011 - 4:23pm

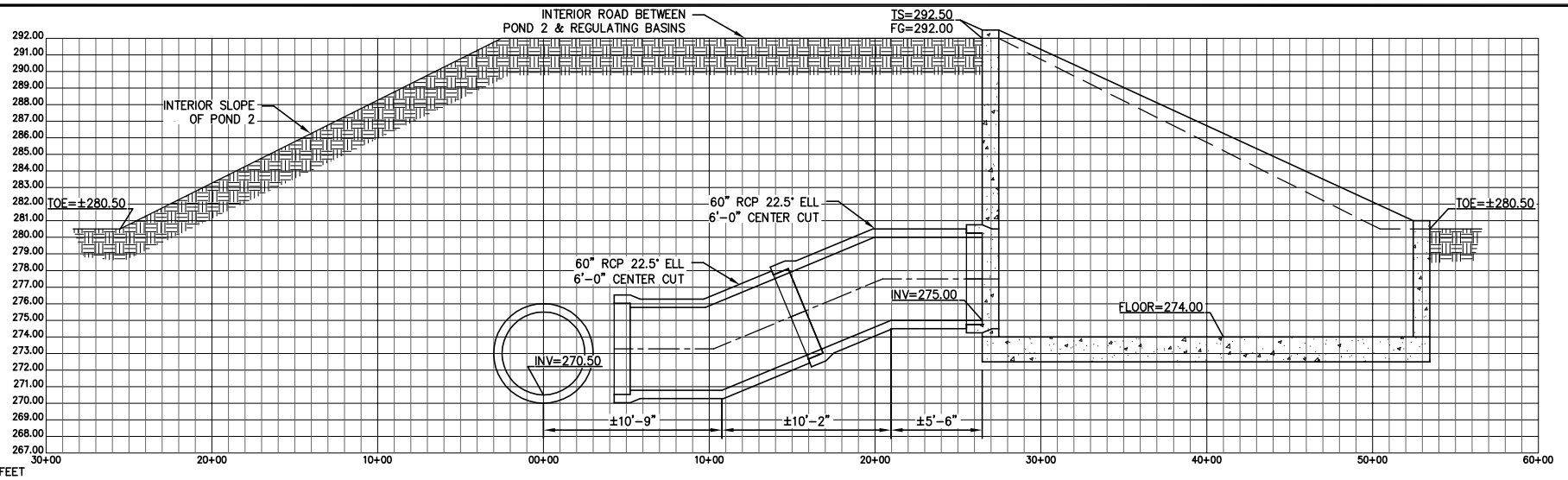


1

SECTION VIEW

## STA 517+00 BASIN OUTLET STRUCTURE

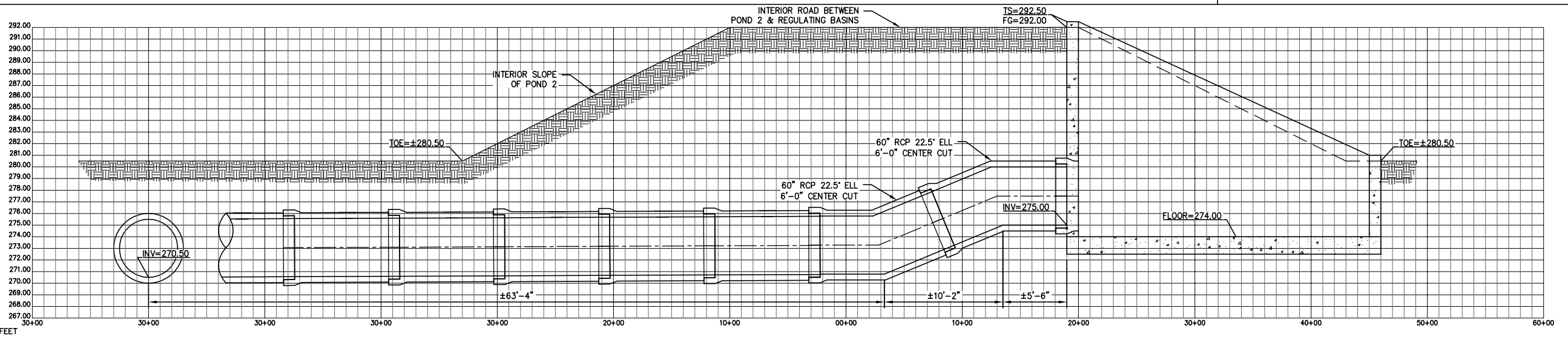


2

SECTION VIEW

## STA 529+00 BASIN OUTLET STRUCTURE

NOT FOR CONSTRUCTION

| REV. | DATE | BY | DESCRIPTION |
|---|---|---|---|
| | | | |

APPROVED BY: _____ R.C.E. 047262
ENGINEERING SERVICES MANAGER FOR CITY ENGINEER
DATE: _____

APPROVED BY: _____ R.C.E. 047262
ENGINEERING SERVICES MANAGER FOR CITY ENGINEER
DATE: _____

CITY OF VISALIA
ENGINEERING DEPARTMENT
336 NORTH BEN MADDOX WAY
VISALIA CA. 93292

PARSONS
100 WEST WALNUT STREET
PASADENA, CA 91124
OFFICE: 626.440.2000
FAX: 626.440.2630
WWW.PARSONS.COM

PROJECT NAME: CITY OF VISALIA
WATER CONSERVATION PLANT UPGRADES

SHEET TITLE: RECYCLED WATER PIPELINE
SECTIONS
SECTIONS 3

EST. 1968
PROVOST & PRITCHARD
CONSULTING GROUP
An Employee Owned Company
130 NORTH GARDEN STREET
VISALIA, CALIFORNIA 93291-6362
559/636-1166 FAX 559/636-1177
www.ppeng.com

COPYRIGHT 2010 by PROVOST & PRITCHARD ENGINEERING GROUP, INC. ALL RIGHTS RESERVED
The firm of Provost & Pritchard Engineering Group, Inc. expressly reserves its common law copyright and other applicable property rights in these plans. These plans are not to be reproduced, changed, or copied in any form or manner whatsoever, nor are they to be assigned to a third party without first obtaining the written permission and consent of Provost & Pritchard Engineering Group, Inc. In the event of unauthorized reuse of these plans by a third party, the third party shall hold the firm of Provost & Pritchard Engineering Group, Inc. harmless, and shall bear the cost of Provost & Pritchard Engineering Group, Inc.'s legal fees associated with defending and enforcing these rights.

| | |
|---|---|
| ISSUE DATE: | 12-6-2010 |
| CHECKED BY: | |
| DESIGNED BY: | |
| DRAWN BY: | P&P |
| SCALE: | AS NOTED |
| DWG. NO.: | ---- |
| SHEET | OF |

plotted 1/5/2011 3:40:58 PM
V:\Clients\Parsons-1979\197909V1-Visalia WCP Pipelines\DWG\SHEET\197909V1-DT-SECTIONS 3 last saved by MIKEPR on 1/5/11
V:\Clients\Parsons-1979\197909V1-Visalia WCP Pipelines\DWG\SHEET\197909V1-DT-SECTIONS 3.dwg Jan 05, 2011 - 4:23pm

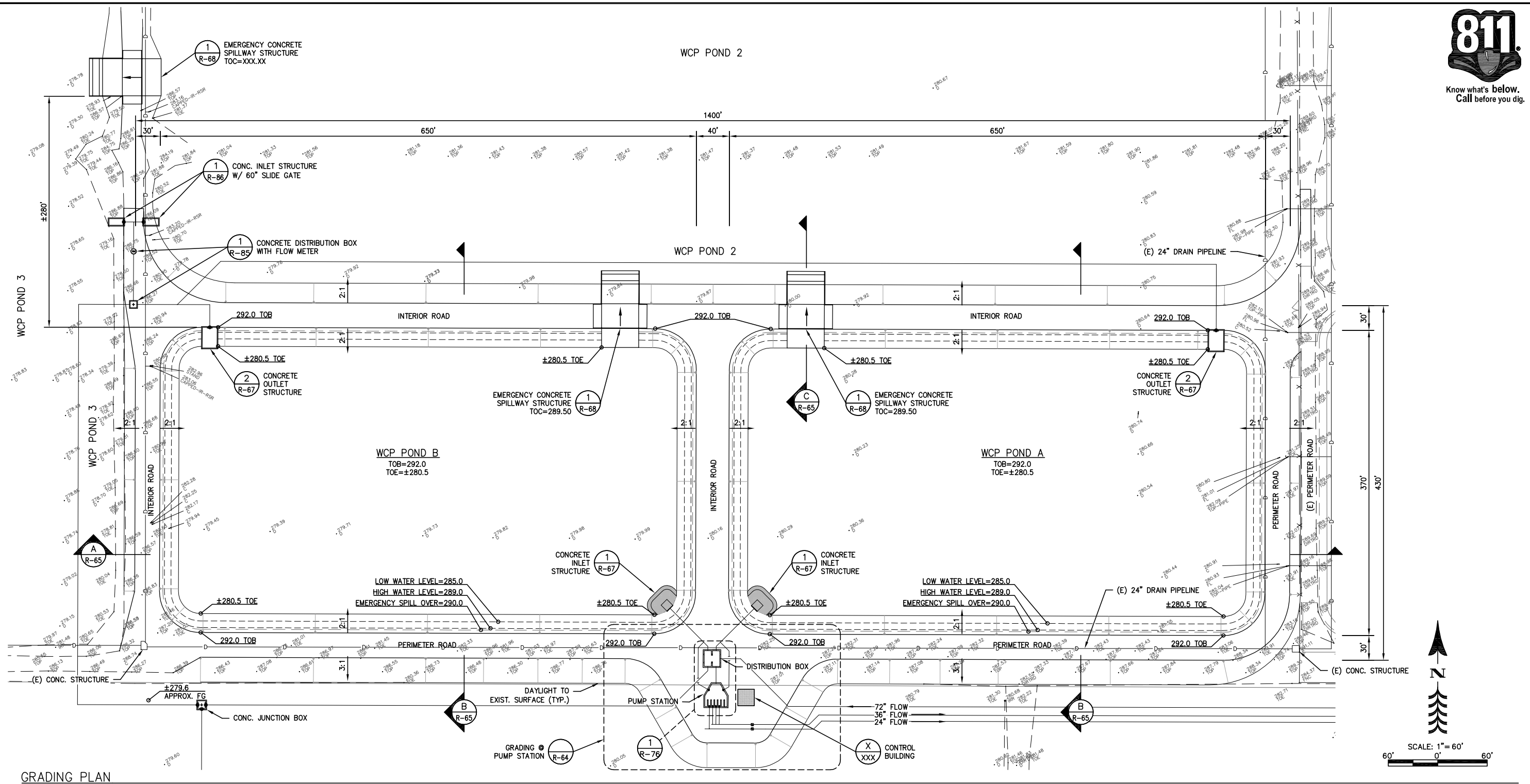


GRADING PLAN

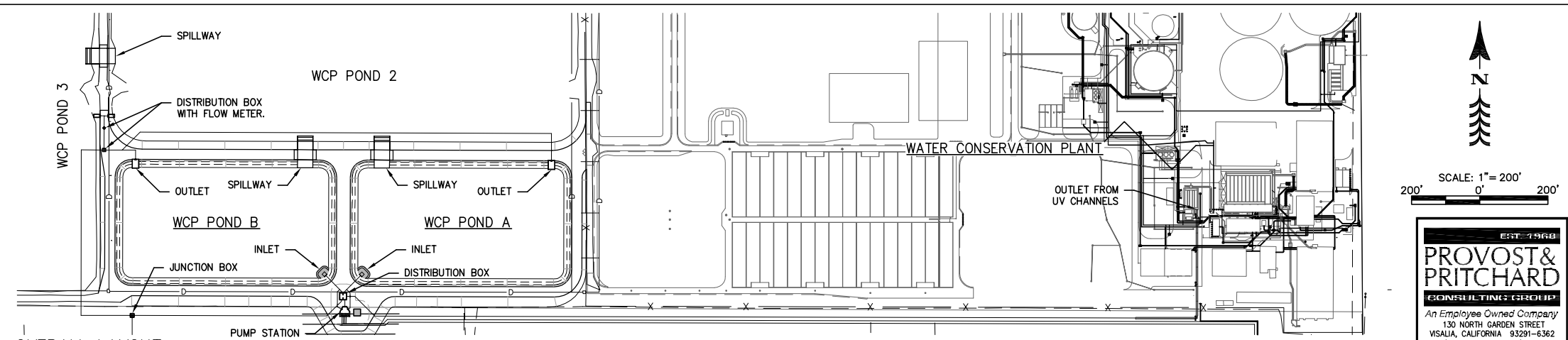


NOT FOR CONSTRUCTION

OVERALL LAYOUT

811 Know what's below. Call before you dig.

| REV. | DATE | BY | DESCRIPTION |
|---|---|---|---|

APPROVED BY: R.C.E. C47262
ENGINEERING SERVICES MANAGER FOR CITY ENGINEER
DATE:

APPROVED BY: R.C.E. C47262
ENGINEERING SERVICES MANAGER FOR CITY ENGINEER
DATE:

CITY OF VISALIA
PUBLIC WORKS DEPARTMENT
336 NORTH BEN MADDOX WAY
VISALIA CA. 93292

PARSONS
100 WEST WALNUT STREET
PASADENA, CA 91124
OFFICE: 626.440.2000
FAX: 626.440.6337
WWW.PARSONS.COM

PROJECT NAME: CITY OF VISALIA
WATER CONSERVATION PLANT UPGRADES

SHEET TITLE: RECYCLED WATER PIPELINE
PROPOSED BASIN
BASIN GRADING PLAN

EST. 1968
PROVOST & PRITCHARD
CONSULTING GROUP
An Employee Owned Company
130 NORTH GARDEN STREET
VISALIA, CALIFORNIA 93291-6362
559/636-1166 FAX 559/636-1177
www.ppeng.com

COPYRIGHT 2010 by PROVOST & PRITCHARD ENGINEERING GROUP, INC. ALL RIGHTS RESERVED
The firm of Provost & Pritchard Engineering Group, Inc. expressly reserves its common law copyright and other applicable property rights in these plans. These plans are not to be reproduced, changed, or copied in any form or manner whatsoever, nor are they to be assigned to a third party without first obtaining the written permission and consent of Provost & Pritchard Engineering Group, Inc. In the event of unauthorized reuse of these plans by a third party, the third party shall hold the firm of Provost & Pritchard Engineering Group, Inc. harmless, and shall bear the cost of Provost & Pritchard Engineering Group, Inc.'s legal fees associated with defending and enforcing these rights.

| | |
|---|---|
| ISSUE DATE: | 12-6-2010 |
| CHECKED BY: | |
| DESIGNED BY: | |
| DRAWN BY: | P&P |
| SCALE: | AS NOTED |
| DWG. NO.: | R-63 |
| SHEET | OF |

V:\Clients\Parsons-1979\197909V1-Visalia WCP Pipelines\DWG\SHEET\BASIN\197909V1-GR-GRADING PLAN 1 last saved by MIKEPR on 12/21/10 plotted 4/9/2010 3:59:06 PM

V:\Clients\Parsons-1979\197909V1-Visalia WCP Pipelines\DWG\SHEET\BASIN\197909V1-GR-GRADING PLAN 1.dwg Jan 05, 2011 - 4:25pm

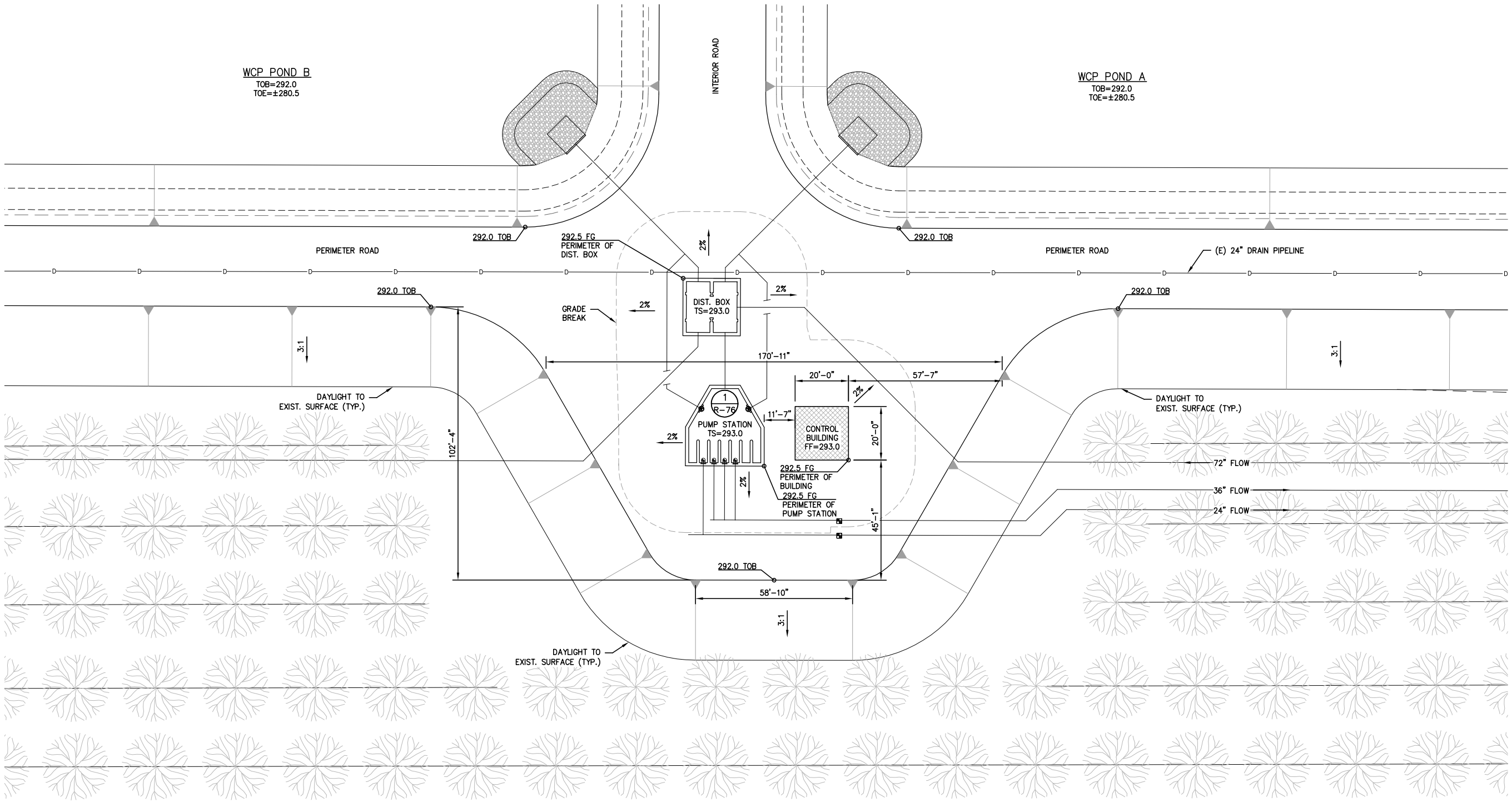


GRADING @ PUMP STATION

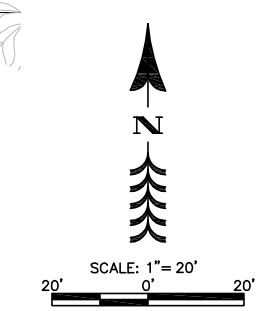


811 Know what's below. Call before you dig.

| REV. | DATE | BY | DESCRIPTION |
|---|---|---|---|

APPROVED BY: R.C.E. C47262
ENGINEERING SERVICES MANAGER FOR CITY ENGINEER
DATE:

APPROVED BY: R.C.E. C47262
ENGINEERING SERVICES MANAGER FOR CITY ENGINEER
DATE:

CITY OF VISALIA
PUBLIC WORKS DEPARTMENT
336 NORTH BEN MADDOX WAY
VISALIA CA. 93292

PARSONS
100 WEST WALNUT STREET
PASADENA, CA 91124
OFFICE: 626.440.2000
FAX: 626.440.6337
WWW.PARSONS.COM

PROJECT NAME: CITY OF VISALIA
WATER CONSERVATION PLANT UPGRADES

SHEET TITLE: RECYCLED WATER PIPELINE
PROPOSED BASIN
GRADING @ PUMP STATION

EST. 1968
PROVOST & PRITCHARD
CONSULTING GROUP
An Employee Owned Company
130 NORTH GARDEN STREET
VISALIA, CALIFORNIA 93291-6362
559/636-1166 FAX 559/636-1177
www.ppeng.com

COPYRIGHT 2010 by PROVOST & PRITCHARD ENGINEERING GROUP, INC. ALL RIGHTS RESERVED
The firm of Provost & Pritchard Engineering Group, Inc. expressly reserves its common law copyright and other applicable property rights in these plans. These plans are not to be reproduced, changed, or copied in any form or manner whatsoever, nor are they to be assigned to a third party without first obtaining the written permission and consent of Provost & Pritchard Engineering Group, Inc. In the event of unauthorized reuse of these plans by a third party, the third party shall hold the firm of Provost & Pritchard Engineering Group, Inc. harmless, and shall bear the cost of Provost & Pritchard Engineering Group, Inc.'s legal fees associated with defending and enforcing these rights.

| | |
|---|---|
| ISSUE DATE: | 12-6-2010 |
| CHECKED BY: | |
| DESIGNED BY: | |
| DRAWN BY: | P&P |
| SCALE: | AS NOTED |
| DWG. NO.: | R-64 |
| SHEET | OF |

NOT FOR CONSTRUCTION

V:\Clients\Parsons-1979\197909V1-Visalia WCP Pipelines\DWG\SHEET\BASIN\197909V1-GR-GRADING PLAN-PUMP STATION last saved by MIKEPR on 12/21/10 plotted 11/29/2010 3:32:46 PM

V:\Clients\Parsons-1979\197909V1-Visalia WCP Pipelines\DWG\SHEET\BASIN\197909V1-GR-GRADING PLAN-PUMP STATION.dwg Jan 05, 2011 - 4:25pm

Know what's **below.**
**Call** before you dig.

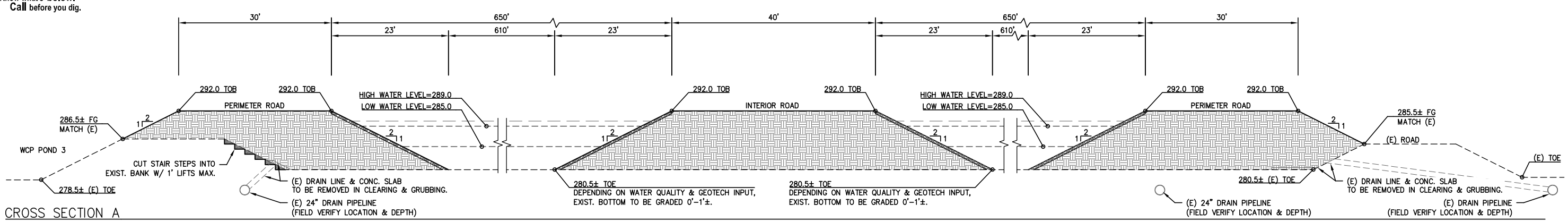


## CROSS SECTION A
SCALE: N.T.S.

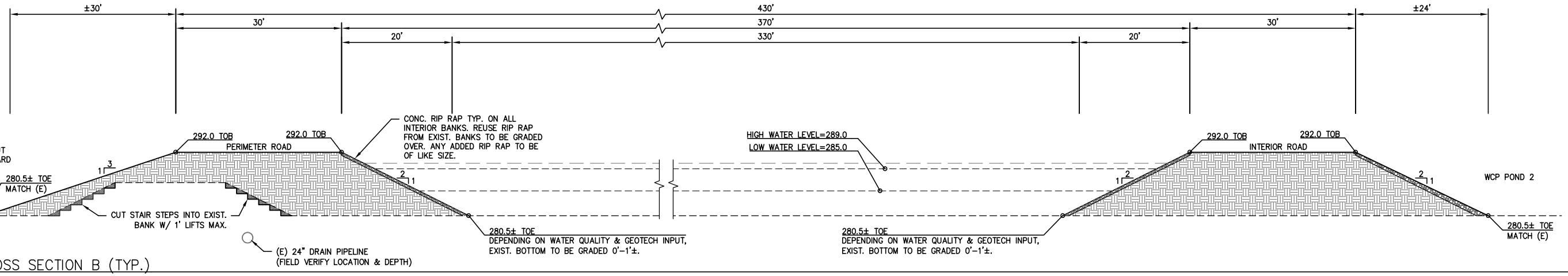


## CROSS SECTION B (TYP.)
SCALE: N.T.S.

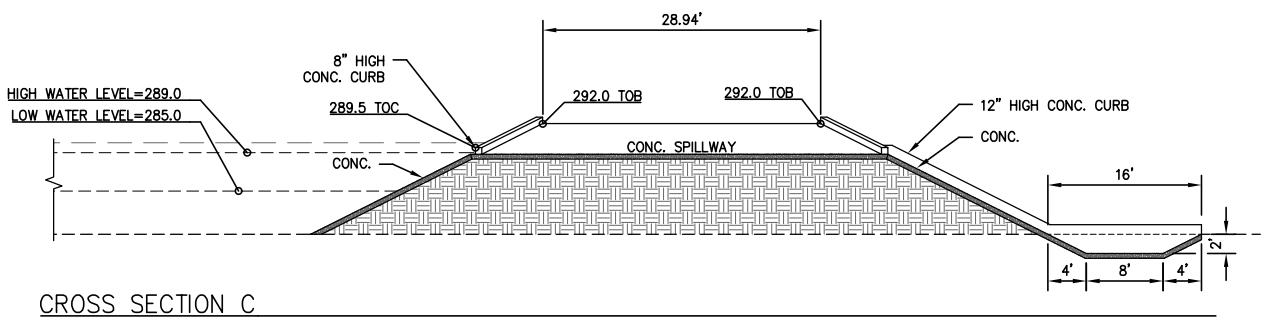


## CROSS SECTION C
SCALE: N.T.S.

**NOTE**

OPERATING WATER LEVELS IN BASINS ARE 285.00 FEET TO 289.00 FEET ELEVATION. SPILL OVER WATER IS 290.00 FEET WITH BOTTOM OF SPILLWAY AT 289.50 FEET ELEVATION.

NOT FOR CONSTRUCTION

| REV. | DATE | BY | DESCRIPTION |
|---|---|---|---|

APPROVED BY: R.C.E. 047262
ENGINEERING SERVICES MANAGER FOR CITY ENGINEER
DATE:

APPROVED BY: R.C.E. 047262
ENGINEERING SERVICES MANAGER FOR CITY ENGINEER
DATE:

CITY OF VISALIA
ENGINEERING DEPARTMENT
336 NORTH BEN MADDOX WAY
VISALIA CA. 93292

PARSONS
100 WEST WALNUT STREET
PASADENA, CA 91124
OFFICE: 626.440.2000
FAX: 626.440.2630
WWW.PARSONS.COM

PROJECT NAME: CITY OF VISALIA
WATER CONSERVATION PLANT UPGRADES

SHEET TITLE: RECYCLED WATER PIPELINE
PROPOSED BASIN
BASIN CROSS SECTIONS

EST. 1968
PROVOST & PRITCHARD
CONSULTING GROUP
*An Employee Owned Company*
130 NORTH GARDEN STREET
VISALIA, CALIFORNIA 93291-6362
559/636-1166 FAX 559/636-1177
www.ppeng.com

COPYRIGHT 2010 by PROVOST & PRITCHARD ENGINEERING GROUP, INC. ALL RIGHTS RESERVED
The firm of Provost & Pritchard Engineering Group, Inc. expressly reserves its common law copyright and other applicable property rights in these plans. These plans are not to be reproduced, changed, or copied in any form or manner whatsoever, nor are they to be assigned to a third party without first obtaining the written permission and consent of Provost & Pritchard Engineering Group, Inc. In the event of unauthorized reuse of these plans by a third party, the third party shall hold the firm of Provost & Pritchard Engineering Group, Inc. harmless, and shall bear the cost of Provost & Pritchard Engineering Group, Inc.'s legal fees associated with defending and enforcing these rights.

| | |
|---|---|
| ISSUE DATE: | 12-6-2010 |
| CHECKED BY: | |
| DESIGNED BY: | |
| DRAWN BY: | P&P |
| SCALE: | AS NOTED |
| DWG. NO.: | R-65 |
| SHEET | OF |

V:\Clients\Parsons-1979\197909V1-Visalia WCP Pipelines\DWG\SHEET\BASIN\197909V1-CS-BASIN SECTIONS last saved by MIKEPR on 12/21/10 plotted 6/9/2010 3:50:00 PM
V:\Clients\Parsons-1979\197909V1-Visalia WCP Pipelines\DWG\SHEET\BASIN\197909V1-CS-BASIN SECTIONS.dwg Jan 05, 2011 - 4:25pm

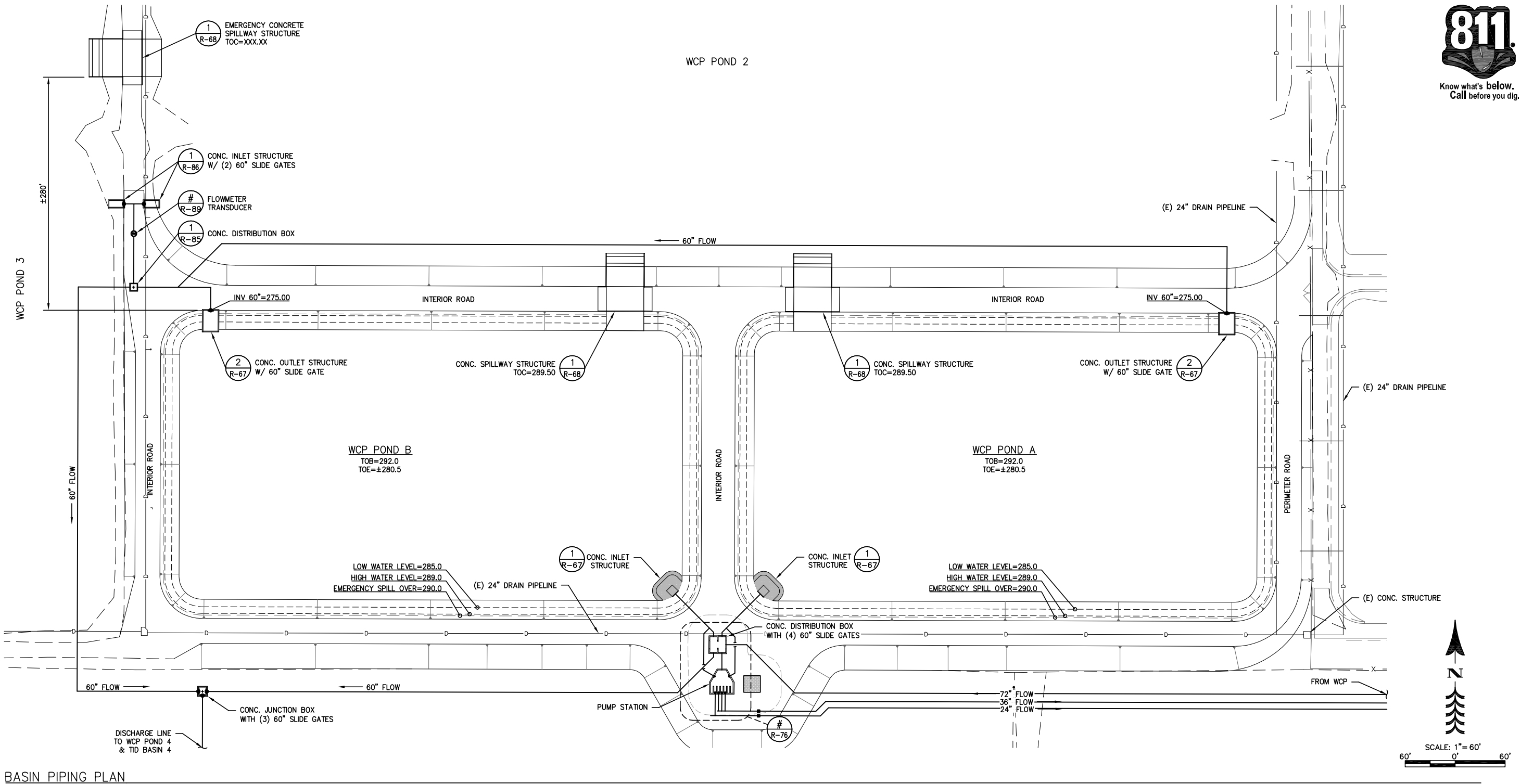


BASIN PIPING PLAN

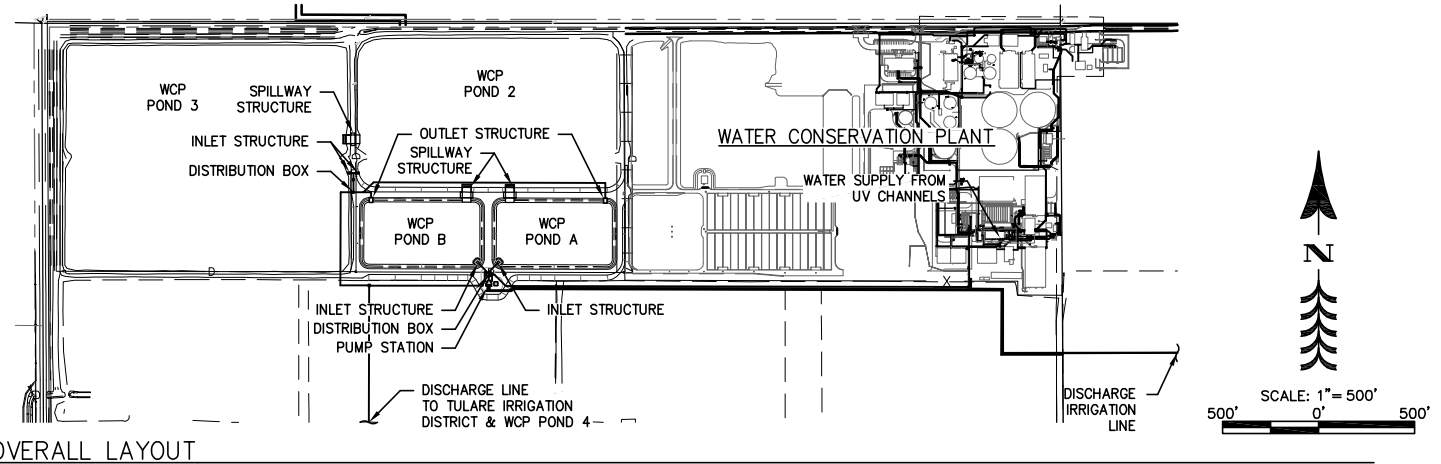


OVERALL LAYOUT

NOT FOR CONSTRUCTION

Know what's **below.** **Call** before you dig.

| REV. | DATE | BY | DESCRIPTION |
|---|---|---|---|
| | | | |

APPROVED BY: _____ R.C.E. 047282
ENGINEERING SERVICES MANAGER FOR CITY ENGINEER
DATE: _____

APPROVED BY: _____ R.C.E. 047282
ENGINEERING SERVICES MANAGER FOR CITY ENGINEER
DATE: _____

CITY OF VISALIA
ENGINEERING DEPARTMENT
336 NORTH BEN MADDOX WAY
VISALIA CA. 93292

PARSONS
100 WEST WALNUT STREET
PASADENA, CA 91124
OFFICE: 626.440.2000
FAX: 626.440.2630
WWW.PARSONS.COM

PROJECT NAME: CITY OF VISALIA
WATER CONSERVATION PLANT UPGRADES

SHEET TITLE: RECYCLED WATER PIPELINE
PROPOSED BASIN
BASIN PIPING PLAN

EST. 1968
PROVOST & PRITCHARD
CONSULTING GROUP
An Employee Owned Company
130 NORTH GARDEN STREET
VISALIA, CALIFORNIA 93291-6362
559/636-1166 FAX 559/636-1177
www.ppeng.com

COPYRIGHT 2010 by PROVOST & PRITCHARD ENGINEERING GROUP, INC. ALL RIGHTS RESERVED
The firm of Provost & Pritchard Engineering Group, Inc. expressly reserves its common law copyright and other applicable property rights in these plans. These plans are not to be reproduced, changed, or copied in any form or manner whatsoever, nor are they to be assigned to a third party without first obtaining the written permission and consent of Provost & Pritchard Engineering Group, Inc. In the event of unauthorized reuse of these plans by a third party, the third party shall hold the firm of Provost & Pritchard Engineering Group, Inc. harmless, and shall bear the cost of Provost & Pritchard Engineering Group, Inc.'s legal fees associated with defending and enforcing these rights.

| | |
|---|---|
| ISSUE DATE: | 12-6-2010 |
| CHECKED BY: | |
| DESIGNED BY: | |
| DRAWN BY: | P&P |
| SCALE: | AS NOTED |
| DWG. NO.: | R-66 |
| SHEET | OF |

V:\Clients\Parsons-1979\197909V1-Visalia WCP Pipelines\DWG\SHEET\BASIN\197909V1-PL-PLUMBING PLAN 1.dwg Jan 05, 2011 - 4:25pm
V:\Clients\Parsons-1979\197909V1-Visalia WCP Pipelines\DWG\SHEET\BASIN\197909V1-PL-PLUMBING PLAN 1 last saved by MIKEP on 12/21/10 plotted 4/29/2010 3:16:48 PM

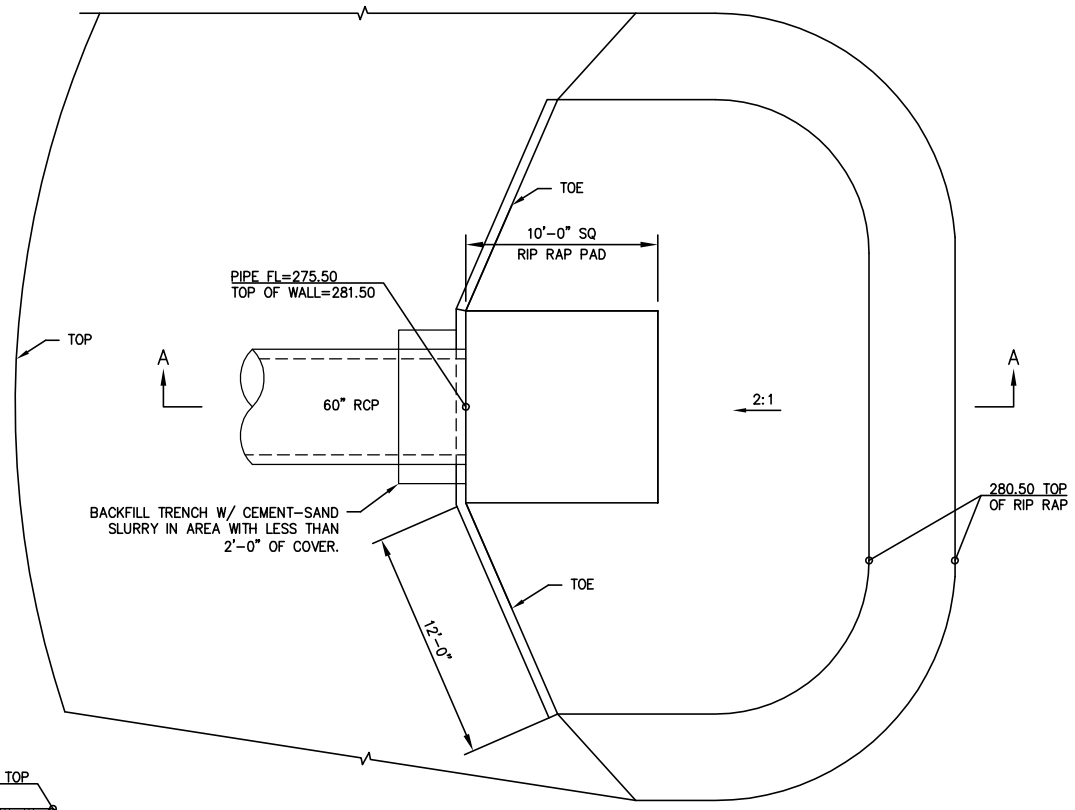


PLAN VIEW

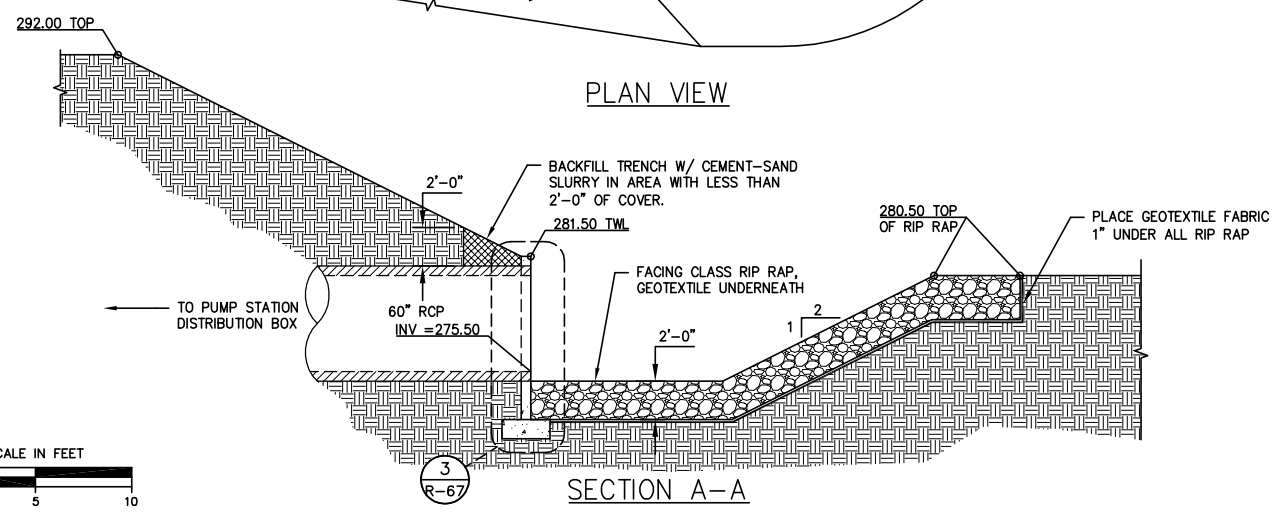


SECTION A–A

BASIN INLET STRUCTURE

1
R-67

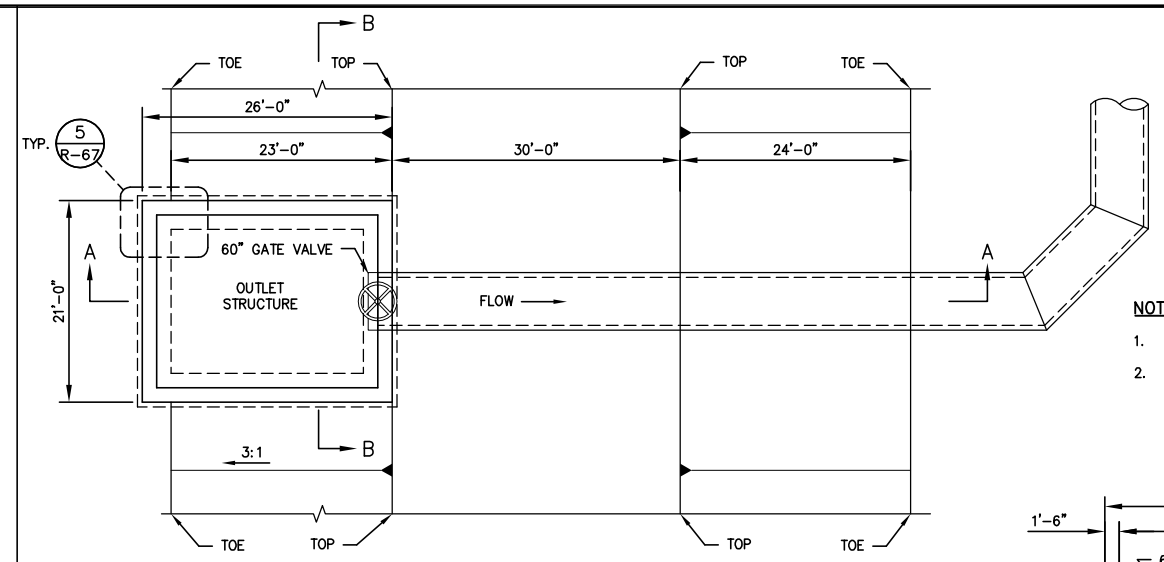


PLAN VIEW

NOTE

1. REINFORCING NOT SHOWN FOR CLARITY.
2. GATE VALVE TO BE 60" XXXXXXXXXXXXXXXXX XXXXXXXXXXXXXXXXXXXXXXX. INSTALL PER MANUFACTURERS. RECOMMENDATIONS.

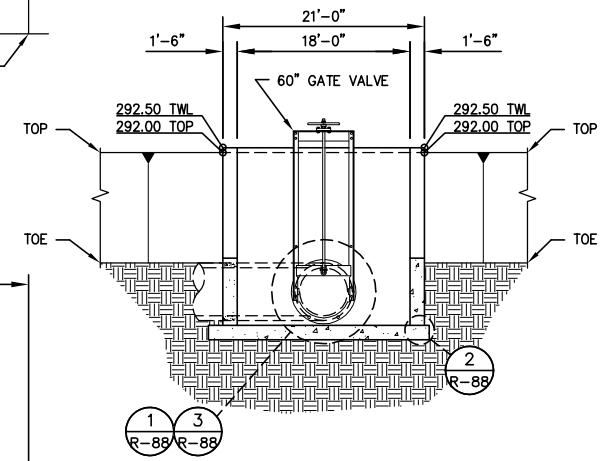


SECTION B–B

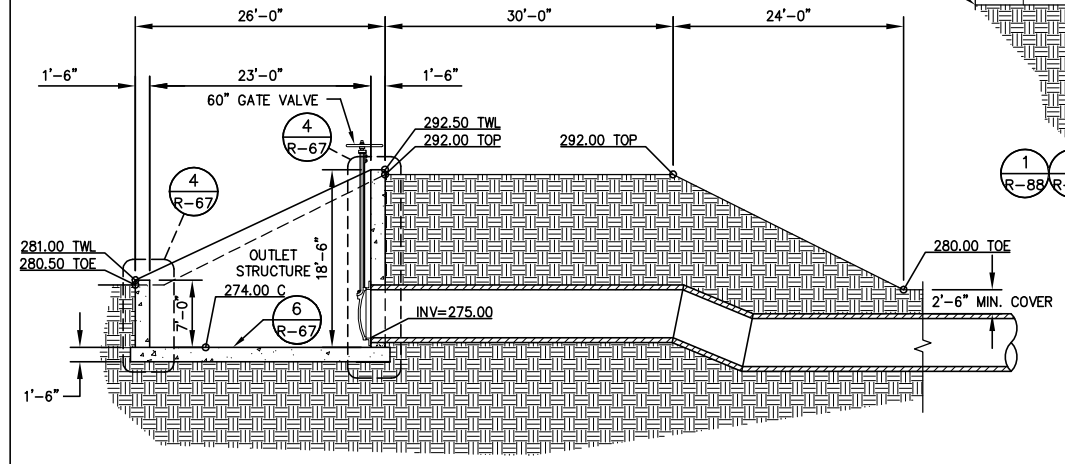


SECTION A–A

BASIN OUTLET DIMENSIONS

2
R-67

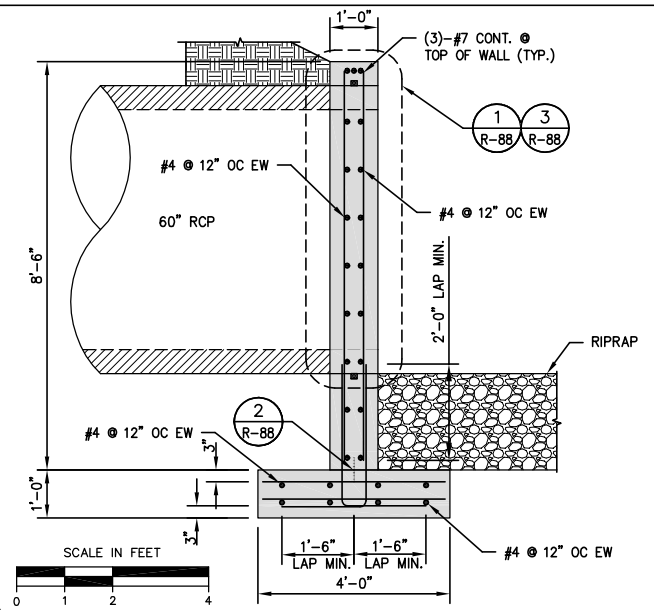


CONC. HEADWALL

3
R-67

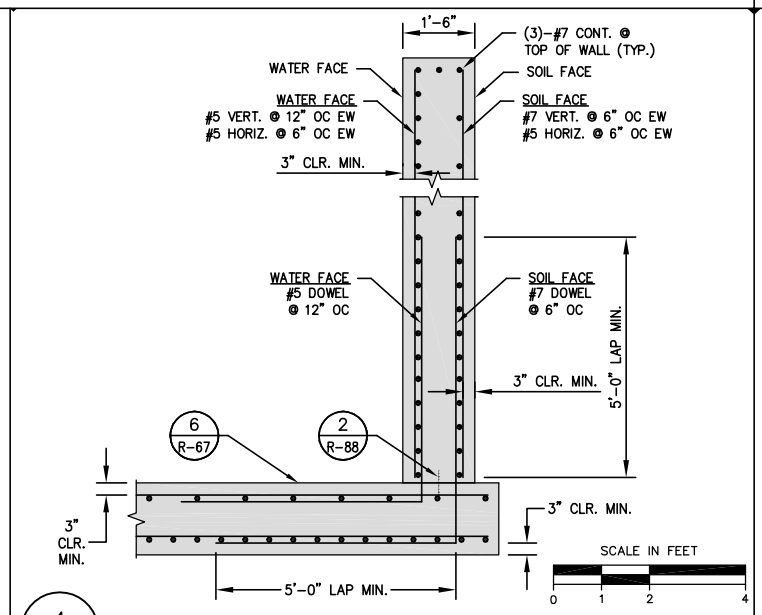


18" WALL REINFORCING

4
R-67

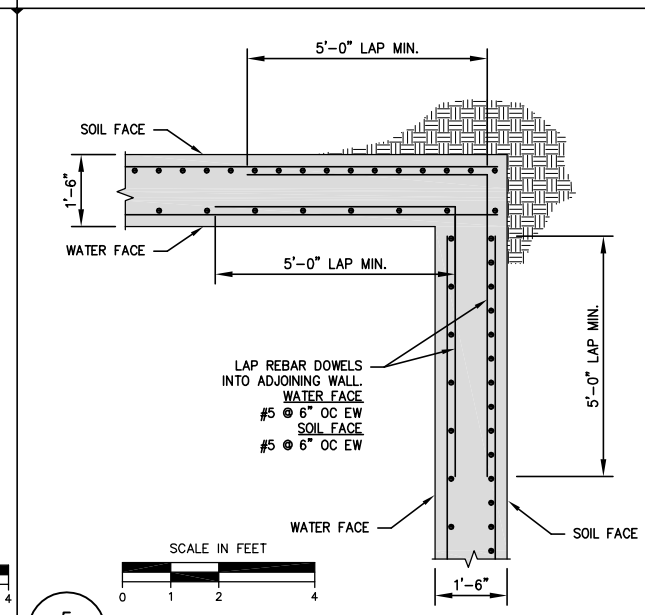


18" WALL CORNER REINFORCING

5
R-67

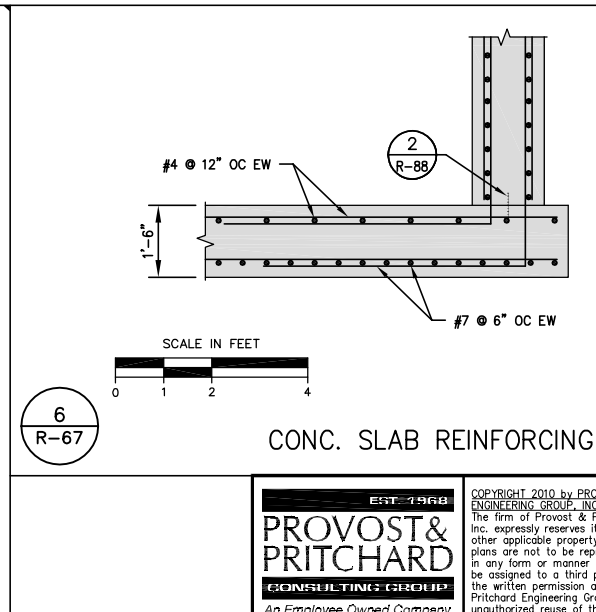


CONC. SLAB REINFORCING

6
R-67

NOT FOR CONSTRUCTION

| REV. | DATE | BY | DESCRIPTION |
|---|---|---|---|
| | | | |

APPROVED BY: R.C.E. 047282
ENGINEERING SERVICES MANAGER FOR CITY ENGINEER
DATE:

APPROVED BY: R.C.E. 047282
ENGINEERING SERVICES MANAGER FOR CITY ENGINEER
DATE:

CITY OF VISALIA
PUBLIC WORKS DEPARTMENT
336 NORTH BEN MADDOX WAY
VISALIA CA. 93292

PARSONS
100 WEST WALNUT STREET
PASADENA, CA 91124
OFFICE: 626.440.2000
FAX: 626.440.2630
WWW.PARSONS.COM

PROJECT NAME: CITY OF VISALIA
WATER CONSERVATION PLANT UPGRADES
RECYCLED WATER PIPELINE
PROPOSED BASIN

SHEET TITLE: BASIN INLET & OUTLET STRUCTURE

COPYRIGHT 2010 by PROVOST & PRITCHARD ENGINEERING GROUP, INC. ALL RIGHTS RESERVED
The firm of Provost & Pritchard Engineering Group, Inc. expressly reserves its common law copyright and other applicable property rights in these plans. These plans are not to be reproduced, changed, or copied in any form or manner whatsoever, nor are they to be assigned to a third party without first obtaining the written permission and consent of Provost & Pritchard Engineering Group, Inc. In the event of unauthorized reuse of these plans by a third party, the third party shall hold the firm of Provost & Pritchard Engineering Group, Inc. harmless, and shall bear the cost of Provost & Pritchard Engineering Group, Inc.'s legal fees associated with defending and enforcing these rights.

EST. 1968
PROVOST& PRITCHARD
CONSULTING GROUP
An Employee Owned Company
130 NORTH GARDEN STREET
VISALIA, CALIFORNIA 93291-6362
559/636-1166 FAX 559/636-1177
www.ppeng.com

| | |
|---|---|
| ISSUE DATE: | 12-6-2010 |
| CHECKED BY: | |
| DESIGNED BY: | |
| DRAWN BY: | P&P |
| SCALE: | AS NOTED |
| DWG. NO.: | R-67 |
| SHEET | OF |

V:\Clients\Parsons-1979\197909V1-Visalia WCP Pipelines\DWG\SHEET\BASIN\197909V1-DT-BASIN INLET_OUTLET last saved by MIKEPR on 12/22/10 plotted 5/3/2010 10:46:05 AM
V:\Clients\Parsons-1979\197909V1-Visalia WCP Pipelines\DWG\SHEET\BASIN\197909V1-DT-BASIN INLET_OUTLET.dwg Jan 05, 2011 - 4:26pm

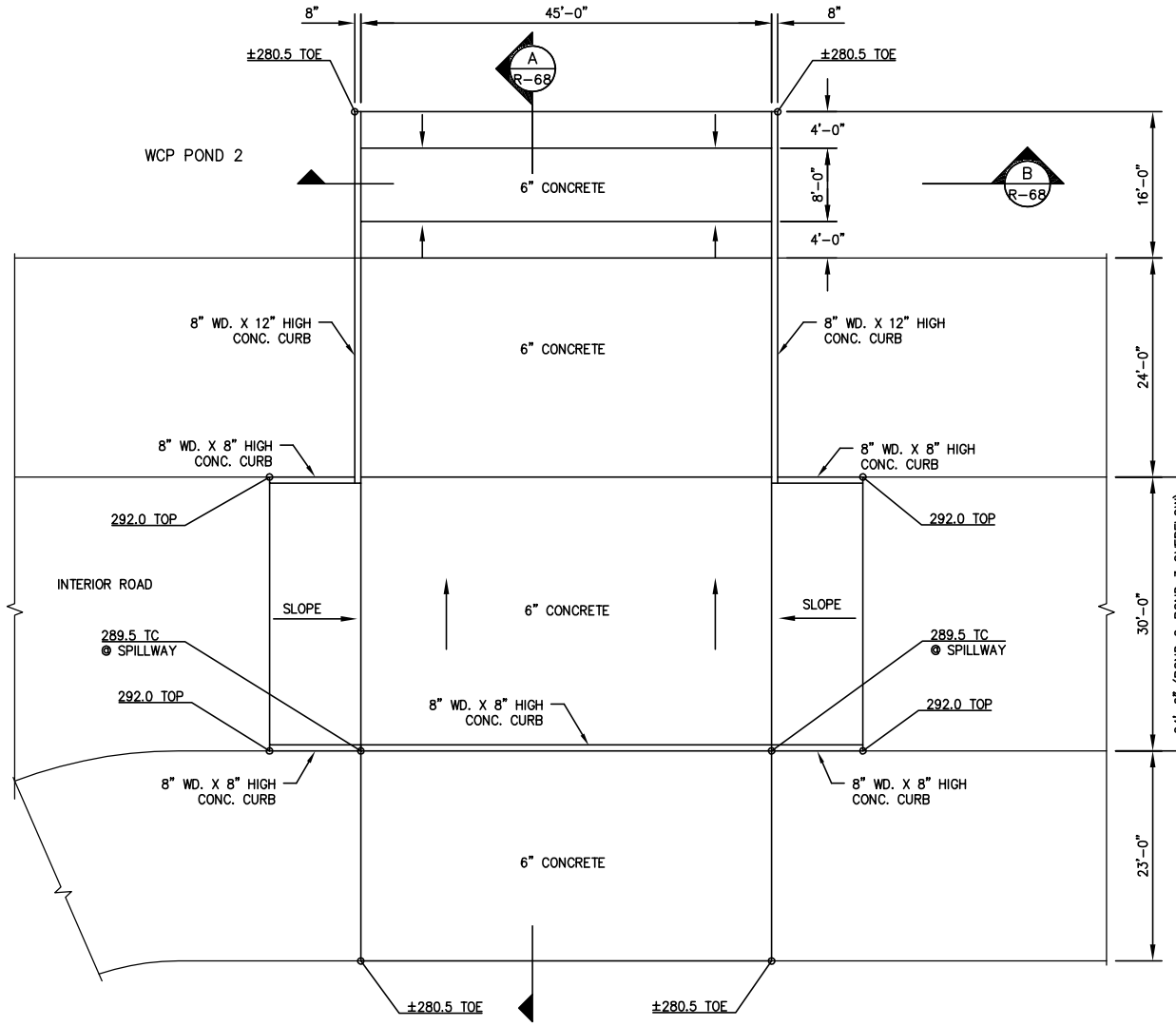


CONCRETE BASIN SPILLWAY

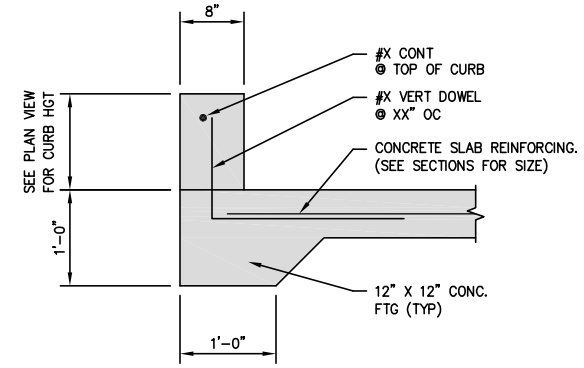


CONCRETE CURB

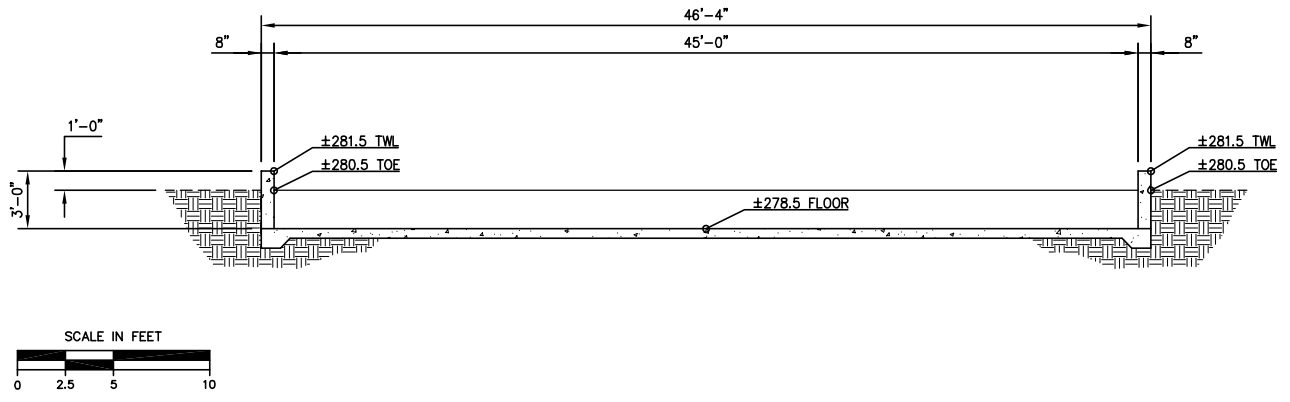


SECTION B

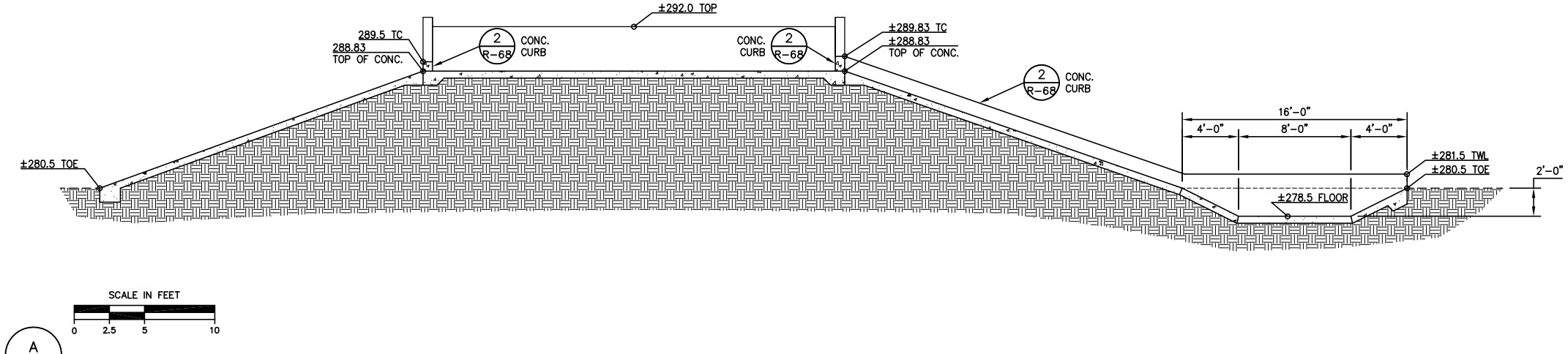


SECTION A

NOT FOR CONSTRUCTION

PARSONS
100 WEST WALNUT STREET
PASADENA, CA 91124
OFFICE: 626.440.2000
FAX: 626.440.2630
WWW.PARSONS.COM

| REV. | DATE | BY | DESCRIPTION |
|---|---|---|---|
| | | | |

APPROVED BY: _____ R.C.E. 047262
ENGINEERING SERVICES MANAGER FOR CITY ENGINEER
DATE: _____

APPROVED BY: _____ R.C.E. 047262
ENGINEERING SERVICES MANAGER FOR CITY ENGINEER
DATE: _____

CITY OF VISALIA
ENGINEERING DEPARTMENT
336 NORTH BEN MADDOX WAY
VISALIA CA. 93292

PROJECT NAME: CITY OF VISALIA
WATER CONSERVATION PLANT UPGRADES

SHEET TITLE: RECYCLED WATER PIPELINE
PROPOSED BASIN
BASIN EMERGENCY SPILLWAY

EST. 1968
PROVOST & PRITCHARD
CONSULTING GROUP
An Employee Owned Company
130 NORTH GARDEN STREET
VISALIA, CALIFORNIA 93291-6362
559/636-1166 FAX 559/636-1177
www.ppeng.com

COPYRIGHT 2010 by PROVOST & PRITCHARD ENGINEERING GROUP, INC. ALL RIGHTS RESERVED
The firm of Provost & Pritchard Engineering Group, Inc. expressly reserves its common law copyright and other applicable property rights in these plans. These plans are not to be reproduced, changed, or copied in any form or manner whatsoever, nor are they to be assigned to a third party without first obtaining the written permission and consent of Provost & Pritchard Engineering Group, Inc. In the event of unauthorized reuse of these plans by a third party, the third party shall hold the firm of Provost & Pritchard Engineering Group, Inc. harmless, and shall bear the cost of Provost & Pritchard Engineering Group, Inc.'s legal fees associated with defending and enforcing these rights.

| | |
|---|---|
| ISSUE DATE: | 12-6-2010 |
| CHECKED BY: | |
| DESIGNED BY: | |
| DRAWN BY: | P&P |
| SCALE: | AS NOTED |
| DWG. NO.: | R-68 |
| SHEET | OF |

V:\Clients\Parsons-1979\197909V1-Visalia WCP Pipelines\DWG\SHEET\BASIN\197909V1-DT-BASIN SPILLWAY.dwg Jan 05, 2011 - 4:26pm
V:\Clients\Parsons-1979\197909V1-Visalia WCP Pipelines\DWG\SHEET\BASIN\197909V1-DT-BASIN SPILLWAY last saved by MIKEPR on 12/21/10 plotted 5/3/2010 2:55:25 PM

Know what's **below.**
**Call** before you dig.

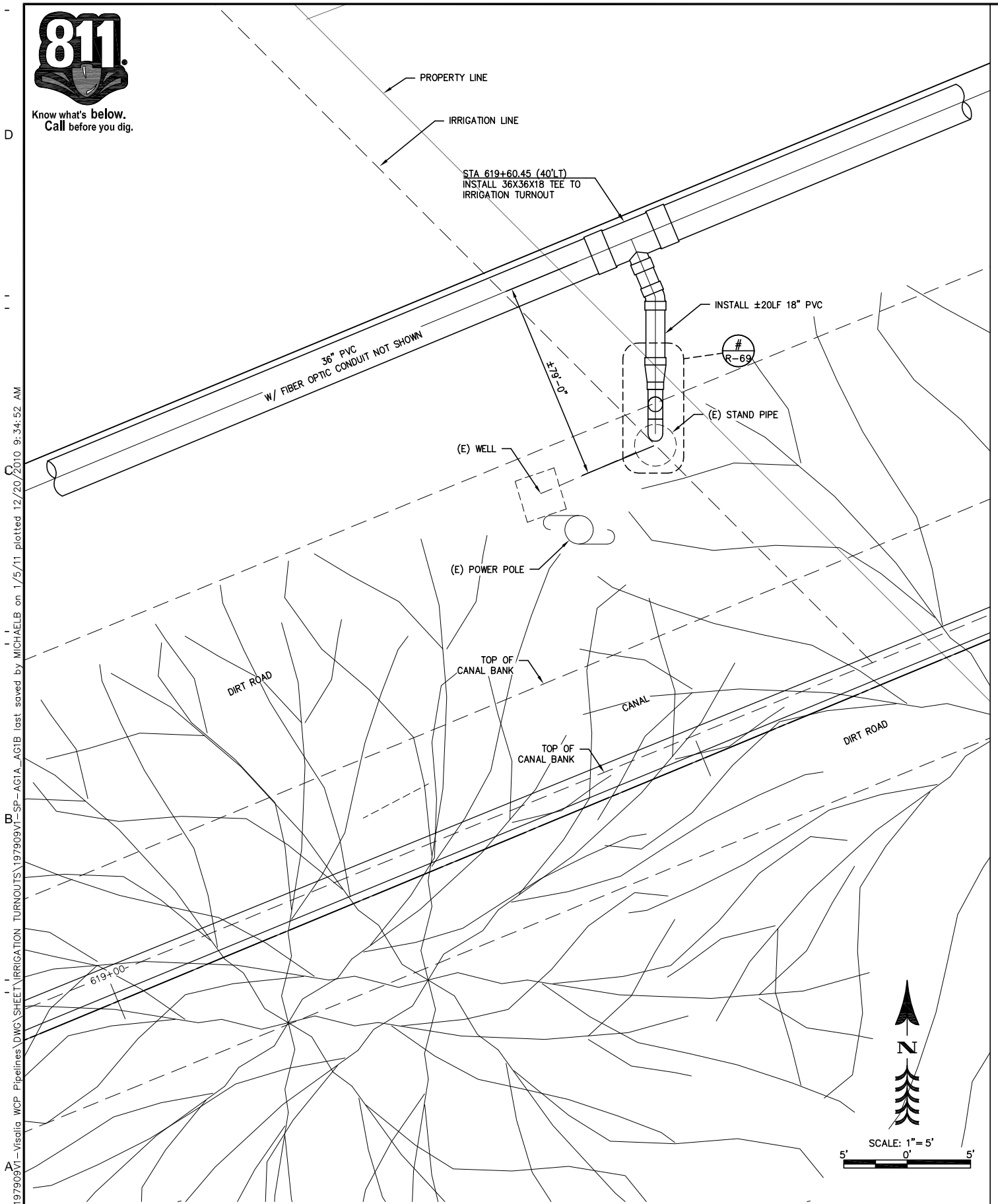


1 / R-69 SITE PLAN – AG TURNOUT #AG1A

NOT FOR CONSTRUCTION

Know what's **below.**
**Call** before you dig.

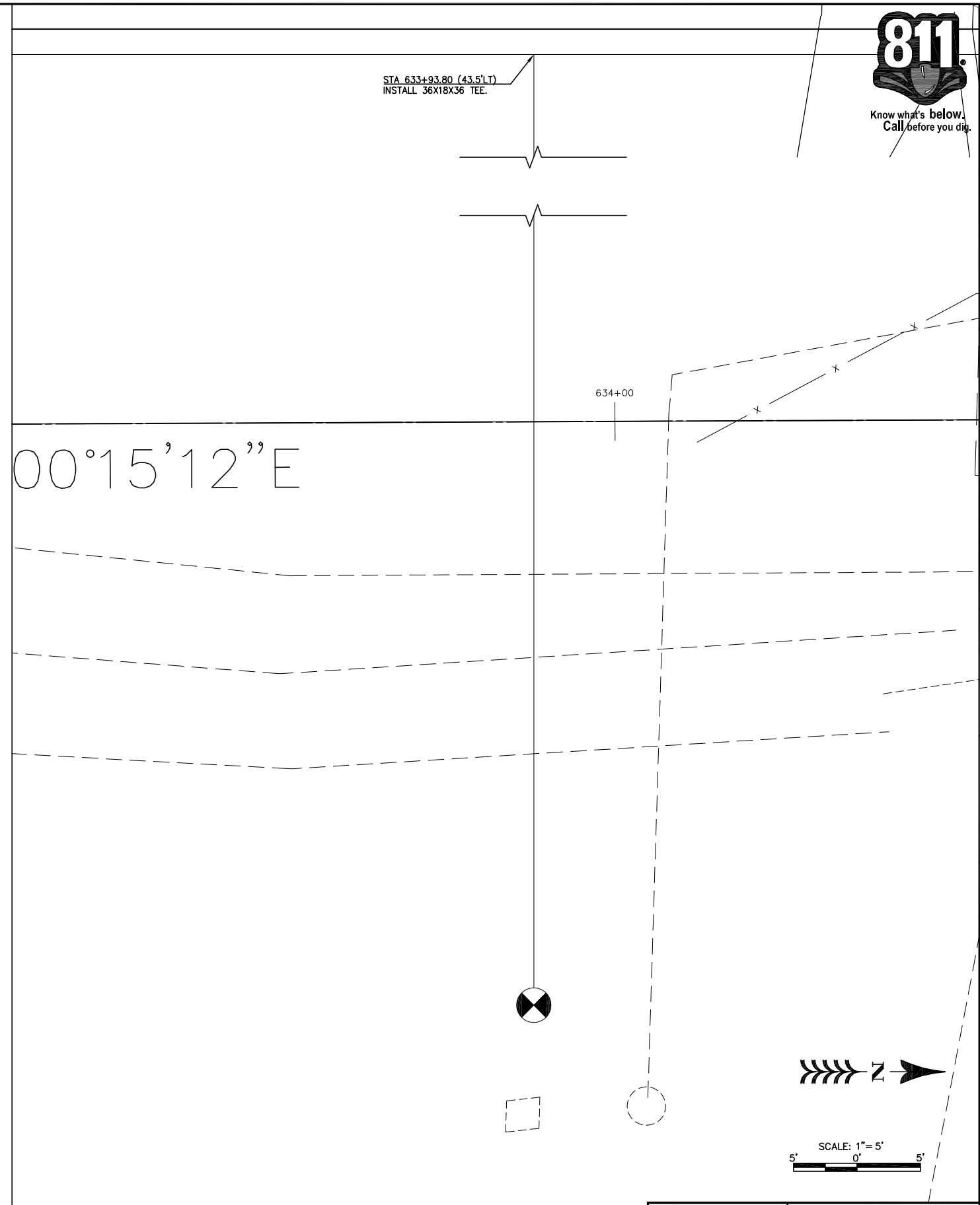


2 / R-69 SITE PLAN – AG TURNOUT #AG1B

| REV. | DATE | BY | DESCRIPTION |
|---|---|---|---|
| | | | |

APPROVED BY: _____ R.C.E. 47282
ENGINEERING SERVICES MANAGER FOR CITY ENGINEER
DATE: _____

APPROVED BY: _____ R.C.E. 47282
ENGINEERING SERVICES MANAGER FOR CITY ENGINEER
DATE: _____

CITY OF VISALIA
ENGINEERING DEPARTMENT
ENGINEERING DIVISION
336 NORTH BEN MADDOX WAY
VISALIA CA. 93292

PARSONS
100 WEST WALNUT STREET
PASADENA, CA 91124
OFFICE: 626.440.2000
FAX: 626.440.2630
WWW.PARSONS.COM

PROJECT NAME: CITY OF VISALIA
WATER CONSERVATION PLANT UPGRADES

SHEET TITLE: RECYCLED WATER PIPELINE
IRRIGATION TURNOUTS
SITE PLAN - AG TURNOUT AG1A & AG1B

EST. 1968
PROVOST& PRITCHARD
CONSULTING GROUP
*An Employee Owned Company*
130 NORTH GARDEN STREET
VISALIA, CALIFORNIA 93291-6362
559/636-1166 FAX 559/636-1177
www.ppeng.com

COPYRIGHT 2010 by PROVOST & PRITCHARD ENGINEERING GROUP, INC. ALL RIGHTS RESERVED
The firm of Provost & Pritchard Engineering Group, Inc. expressly reserves its common law copyright and other applicable property rights in these plans. These plans are not to be reproduced, changed, or copied in any form or manner whatsoever, nor are they to be assigned to a third party without first obtaining the written permission and consent of Provost & Pritchard Engineering Group, Inc. In the event of unauthorized reuse of these plans by a third party, the third party shall hold the firm of Provost & Pritchard Engineering Group, Inc. harmless, and shall bear the cost of Provost & Pritchard Engineering Group, Inc.'s legal fees associated with defending and enforcing these rights.

| | |
|---|---|
| ISSUE DATE: | 12-6-2010 |
| CHECKED BY: | |
| DESIGNED BY: | |
| DRAWN BY: | P&P |
| SCALE: | AS NOTED |
| DWG. NO.: | R-69 |
| SHEET | OF |

V:\Clients\Parsons-1979\197909V1-Visalia WCP Pipelines\DWG\SHEET\IRRIGATION TURNOUTS\197909V1-SP-AG1A_AG1B last saved by MICHAELB on 1/5/11 plotted 12/20/2010 9:34:52 AM

V:\Clients\Parsons-1979\197909V1-Visalia WCP Pipelines\DWG\SHEET\IRRIGATION TURNOUTS\197909V1-SP-AG1A_AG1B.dwg Jan 05, 2011 - 4:29pm

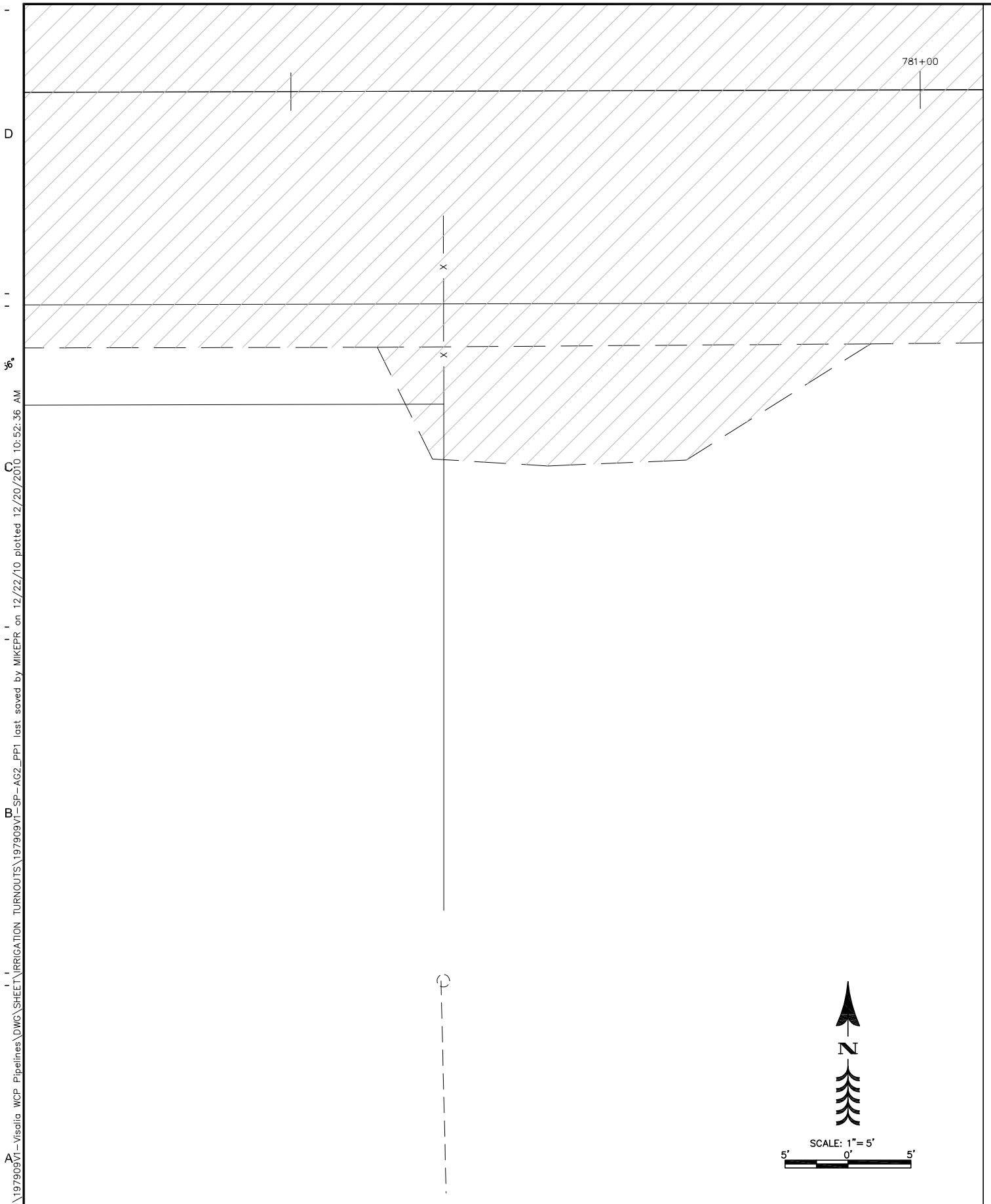


1 R-70 SITE PLAN – AG TURNOUT #AG2

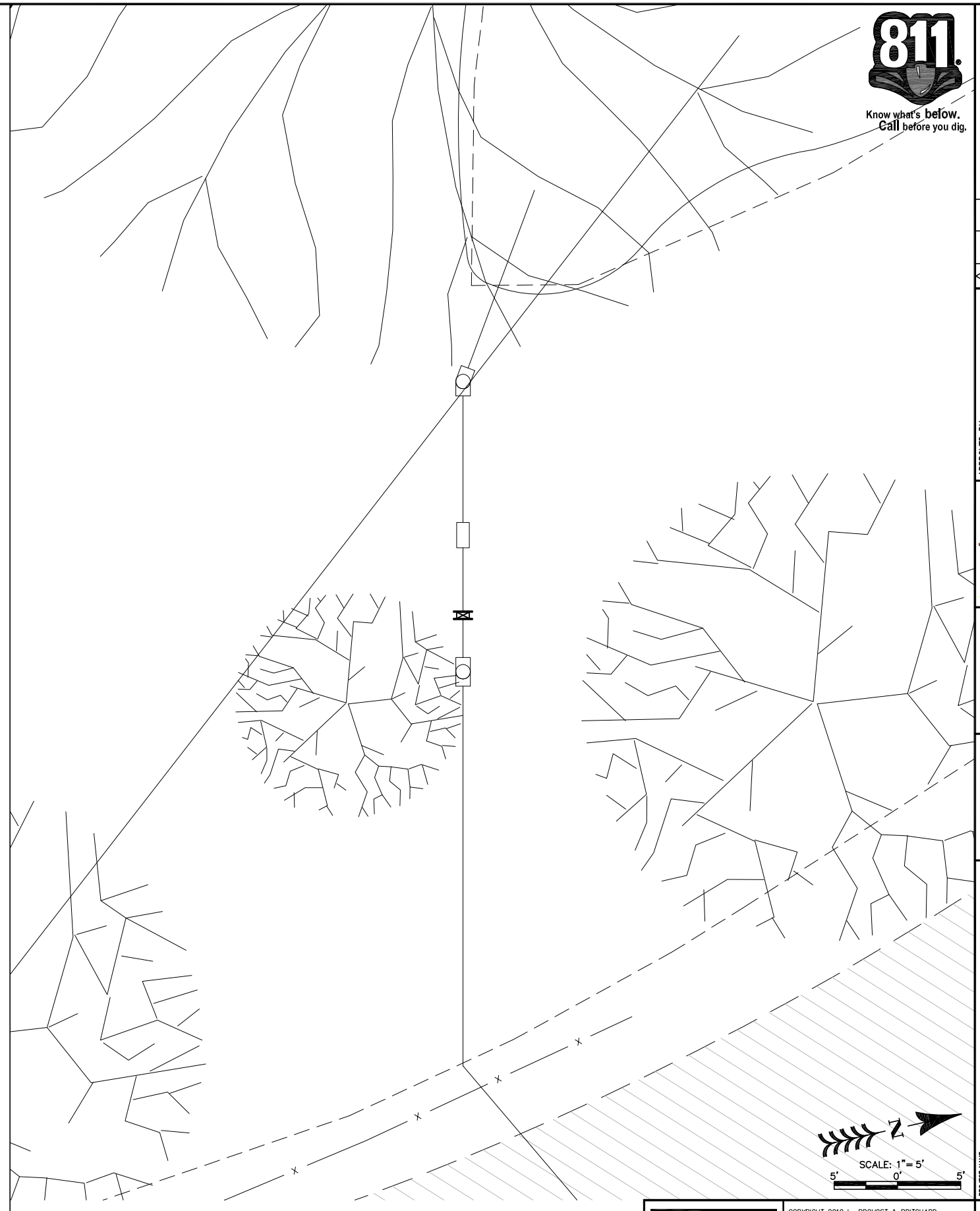


2 R-70 SITE PLAN – IRR. TURNOUT #PP1

NOT FOR CONSTRUCTION

811 Know what's below. Call before you dig.

| REV. | DATE | BY | DESCRIPTION |
|---|---|---|---|

APPROVED BY:
ENGINEERING SERVICES MANAGER FOR CITY ENGINEER
R.C.E. 047262
DATE:

APPROVED BY:
ENGINEERING SERVICES MANAGER FOR CITY ENGINEER
R.C.E. 047262
DATE:

CITY OF VISALIA
ENGINEERING DEPARTMENT
WATER SECTION
336 NORTH BEN MADDOX WAY
VISALIA CA. 93292

PARSONS
100 WEST WALNUT STREET
PASADENA, CA 91124
OFFICE: 626.440.2000
FAX: 626.440.2630
WWW.PARSONS.COM

PROJECT NAME: CITY OF VISALIA
WATER CONSERVATION PLANT UPGRADES

SHEET TITLE: RECYCLED WATER PIPELINE
IRRIGATION TURNOUTS
SITE PLAN - AG TURNOUT AG2 & PP1

EST. 1968
PROVOST& PRITCHARD
CONSULTING GROUP
An Employee Owned Company
130 NORTH GARDEN STREET
VISALIA, CALIFORNIA 93291-6362
559/636-1166 FAX 559/636-1177
www.ppeng.com

COPYRIGHT 2010 by PROVOST & PRITCHARD ENGINEERING GROUP, INC. ALL RIGHTS RESERVED
The firm of Provost & Pritchard Engineering Group, Inc. expressly reserves its common law copyright and other applicable property rights in these plans. These plans are not to be reproduced, changed, or copied in any form or manner whatsoever, nor are they to be assigned to a third party without first obtaining the written permission and consent of Provost & Pritchard Engineering Group, Inc. In the event of unauthorized reuse of these plans by a third party, the third party shall hold the firm of Provost & Pritchard Engineering Group, Inc. harmless, and shall bear the cost of Provost & Pritchard Engineering Group, Inc.'s legal fees associated with defending and enforcing these rights.

| | |
|---|---|
| ISSUE DATE: | 12-6-2010 |
| CHECKED BY: | |
| DESIGNED BY: | |
| DRAWN BY: | P&P |
| SCALE: | AS NOTED |
| DWG. NO.: | R-70 |
| SHEET | OF |

V:\Clients\Parsons-1979\197909V1-Visalia WCP Pipelines\DWG\SHEET\IRRIGATION TURNOUTS\197909V1-SP-AG2_PP1 last saved by MIKEPR on 12/22/10 plotted 12/20/2010 10:52:36 AM

V:\Clients\Parsons-1979\197909V1-Visalia WCP Pipelines\DWG\SHEET\IRRIGATION TURNOUTS\197909V1-SP-AG2_PP1.dwg Jan 05, 2011 - 4:29pm

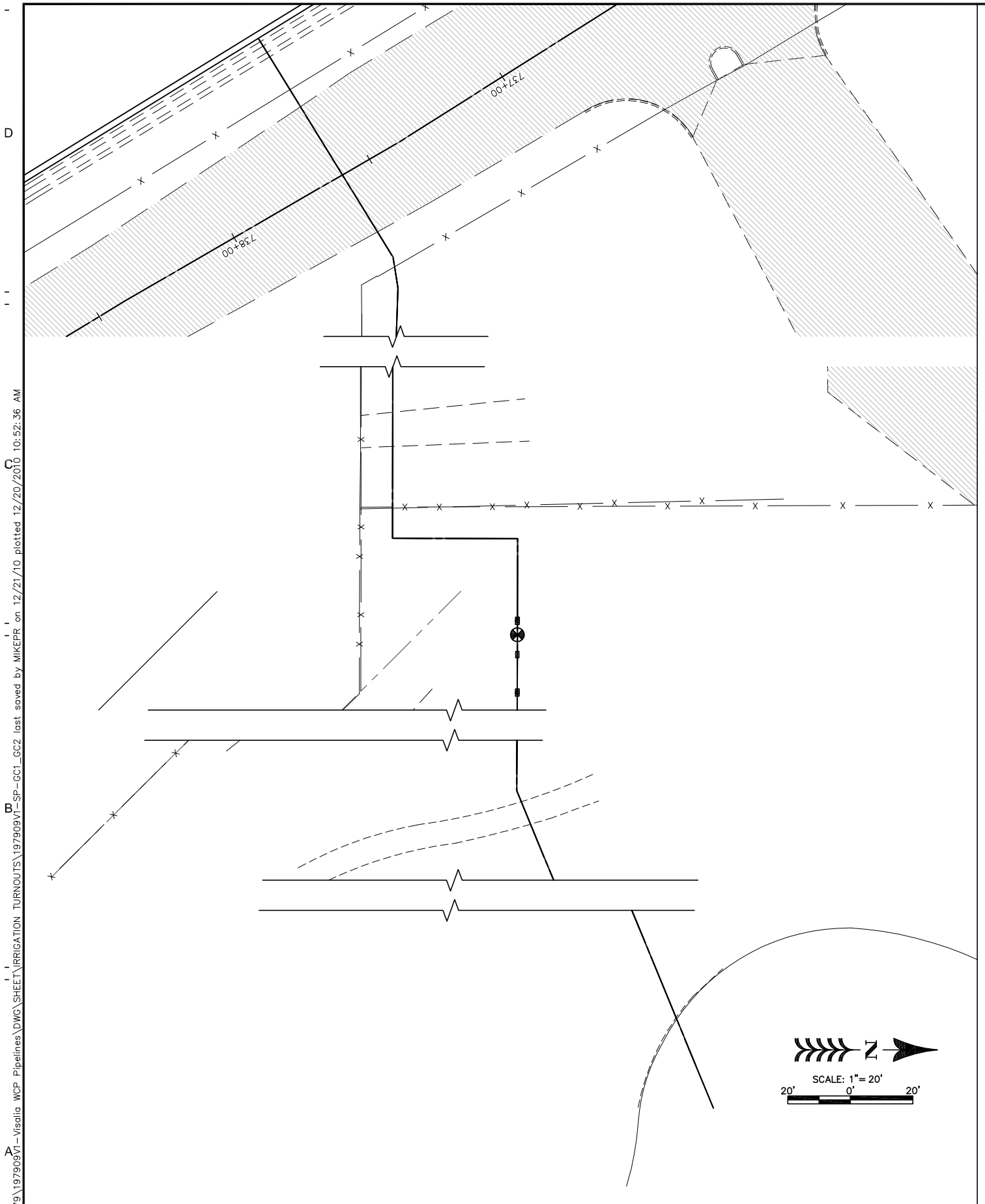


1 R-71 SITE PLAN – AG TURNOUT #GC1

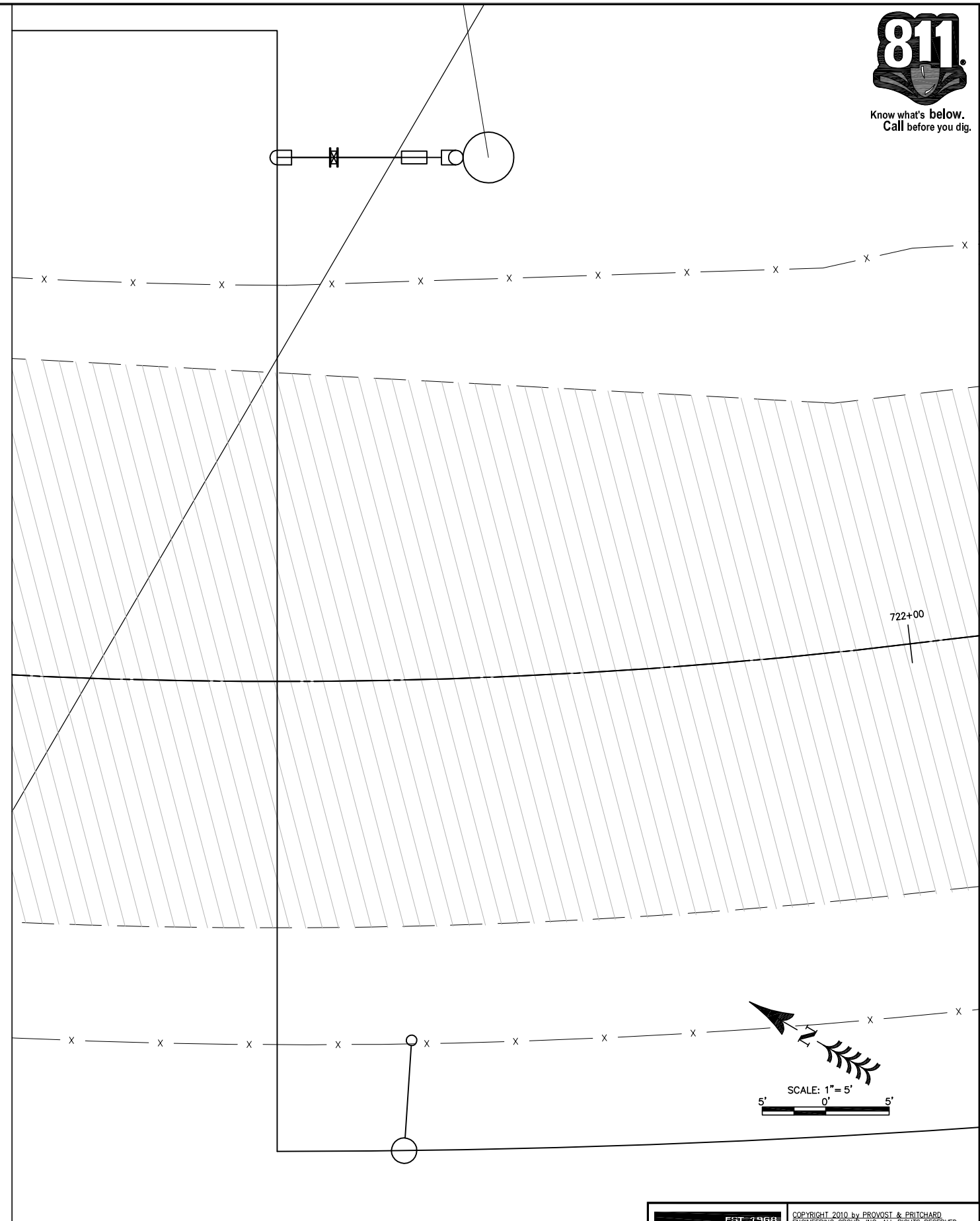


2 R-71 SITE PLAN – AG TURNOUT #GC2

NOT FOR CONSTRUCTION

811 Know what's **below.** **Call** before you dig.

| REV. | DATE | BY | DESCRIPTION |
|---|---|---|---|
| | | | |

APPROVED BY: R.C.E. 047262
ENGINEERING SERVICES MANAGER FOR CITY ENGINEER
DATE:

APPROVED BY: R.C.E. 047262
ENGINEERING SERVICES MANAGER FOR CITY ENGINEER
DATE:

CITY OF VISALIA
ENGINEERING DEPARTMENT
336 NORTH BEN MADDOX WAY
VISALIA CA. 93292

PARSONS
100 WEST WALNUT STREET
PASADENA, CA 91124
OFFICE: 626.440.2000
FAX: 626.440.4620
WWW.PARSONS.COM

PROJECT NAME: CITY OF VISALIA
WATER CONSERVATION PLANT UPGRADES

SHEET TITLE: RECYCLED WATER PIPELINE
IRRIGATION TURNOUTS
SITE PLAN - AG TURNOUT GC1 & GC2

EST. 1968
PROVOST& PRITCHARD
CONSULTING GROUP
*An Employee Owned Company*
130 NORTH GARDEN STREET
VISALIA, CALIFORNIA 93291-6362
559/636-1166 FAX 559/636-1177
www.ppeng.com

COPYRIGHT 2010 by PROVOST & PRITCHARD ENGINEERING GROUP, INC. ALL RIGHTS RESERVED
The firm of Provost & Pritchard Engineering Group, Inc. expressly reserves its common law copyright and other applicable property rights in these plans. These plans are not to be reproduced, changed, or copied in any form or manner whatsoever, nor are they to be assigned to a third party without first obtaining the written permission and consent of Provost & Pritchard Engineering Group, Inc. In the event of unauthorized reuse of these plans by a third party, the third party shall hold the firm of Provost & Pritchard Engineering Group, Inc. harmless, and shall bear the cost of Provost & Pritchard Engineering Group, Inc.'s legal fees associated with defending and enforcing these rights.

| | |
|---|---|
| ISSUE DATE: | 12-6-2010 |
| CHECKED BY: | |
| DESIGNED BY: | |
| DRAWN BY: | P&P |
| SCALE: | AS NOTED |
| DWG. NO.: | R-71 |
| SHEET | OF |

last saved by MIKEPR on 12/21/10 plotted 12/20/2010 10:52:36 AM
V:\Clients\Parsons-1979\197909V1-Visalia WCP Pipelines\DWG\SHEET\IRRIGATION TURNOUTS\197909V1-SP-GC1_GC2 last saved by MIKEPR on 12/21/10 plotted 12/20/2010 10:52:36 AM
V:\Clients\Parsons-1979\197909V1-Visalia WCP Pipelines\DWG\SHEET\IRRIGATION TURNOUTS\197909V1-SP-GC1_GC2.dwg Jan 05, 2011 - 4:30pm

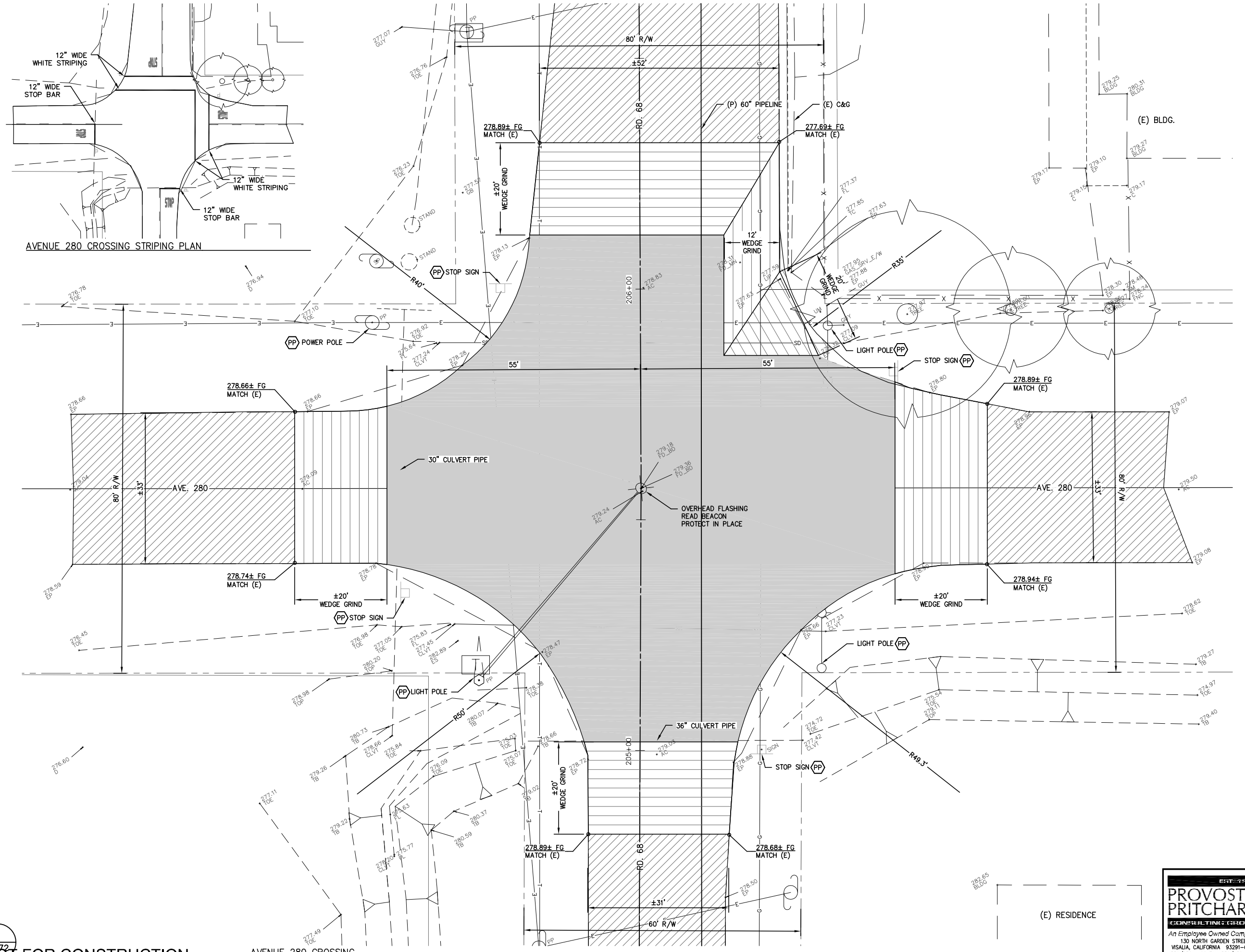


1
R-72

NOT FOR CONSTRUCTION

811 Know what's below. Call before you dig.

LEGEND

- EXISTING AC
- PROPOSED AC
- PP PROTECT IN PLACE

N

SCALE: 1"=10'

10' 0' 10'

| REV. | DATE | BY | DESCRIPTION |
|---|---|---|---|

PARSONS
100 WEST WALNUT STREET
PASADENA, CA 91124
OFFICE: 626.440.2000
FAX: 626.440.6337
WWW.PARSONS.COM

PROJECT NAME: CITY OF VISALIA
WATER CONSERVATION PLANT UPGRADES

SHEET TITLE: RECYCLED WATER PIPELINE
RD 68 & AVE 280 INTERSECTION
RD 68 & AVE 280 INTERSECTION

EST. 1968
PROVOST & PRITCHARD
CONSULTING GROUP
An Employee Owned Company
130 NORTH GARDEN STREET
VISALIA, CALIFORNIA 93291-6362
559/636-1166 FAX 559/636-1177
www.ppeng.com

COPYRIGHT 2010 by PROVOST & PRITCHARD CONSULTING GROUP, INC. ALL RIGHTS RESERVED
The firm of Provost & Pritchard Engineering Group, Inc. expressly reserves its common law copyright and other applicable property rights in these plans. These plans are not to be reproduced, changed, or copied in any form or manner whatsoever, nor are they to be assigned to a third party without first obtaining the written permission and consent of Provost & Pritchard Engineering Group, Inc. In the event of unauthorized reuse of these plans by a third party, the third party shall hold the firm of Provost & Pritchard Engineering Group, Inc. harmless, and shall bear the cost of Provost & Pritchard Engineering Group, Inc.'s legal fees associated with defending and enforcing these rights.

| | |
|---|---|
| ISSUE DATE: | 12-6-2010 |
| CHECKED BY: | |
| DESIGNED BY: | |
| DRAWN BY: | P&P |
| SCALE: | AS NOTED |
| DWG. NO.: | R-72 |
| SHEET | OF |

1/5/2011 4:30 PM V:\Clients\Parsons-1979\197909V1-Visalia WCP Pipelines\DWG\SHEET\197909V1-DT-AVE 280 SITE.dwg -Gabriel Do Reynoso

TI=
R=

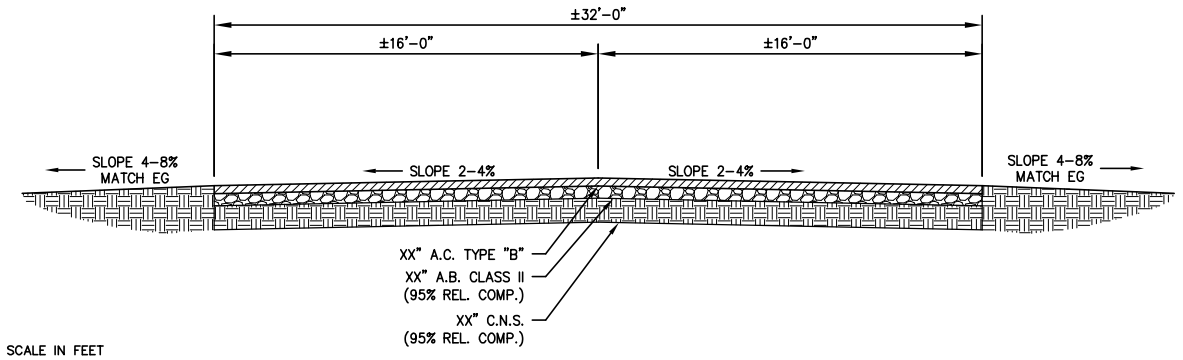


1
R-73

AVENUE 280 CROSS SECTION

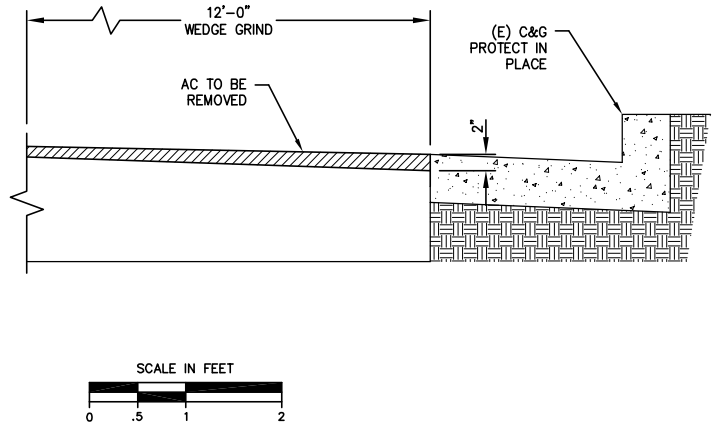


12' WEDGE GRIND ROAD @ EXISTING C & G

TI=
R=




2
R-73

ROAD 68 CROSS SECTION




20' WEDGE GRIND ROAD 68 & AVE 280

TI=
R=




3
R-73

ROAD 68 CROSS SECTION

NOT FOR CONSTRUCTION

| REV. | DATE | BY | DESCRIPTION |
|---|---|---|---|
| | | | |

APPROVED BY: _____ R.C.E. 047282
ENGINEERING SERVICES MANAGER FOR CITY ENGINEER
DATE: _____

APPROVED BY: _____ R.C.E. 047282
ENGINEERING SERVICES MANAGER FOR CITY ENGINEER
DATE: _____


CITY OF VISALIA
ENGINEERING DEPARTMENT
336 NORTH BEN MADDOX WAY
VISALIA CA. 93292

PARSONS
100 WEST WALNUT STREET
PASADENA, CA 91124
OFFICE: 626.440.2000
FAX: 626.440.2037
WWW.PARSONS.COM

PROVOST & PRITCHARD
EST. 1968
CONSULTING GROUP
An Employee Owned Company
130 NORTH GARDEN STREET
VISALIA, CALIFORNIA 93291-6362
559/636-1166 FAX 559/636-1177
www.ppeng.com



COPYRIGHT 2010 by PROVOST & PRITCHARD ENGINEERING GROUP, INC. ALL RIGHTS RESERVED.
The firm of Provost & Pritchard Engineering Group, Inc. expressly reserves its common law copyright and other applicable property rights in these plans. These plans are not to be reproduced, changed, or copied in any form or manner whatsoever, nor are they to be assigned to a third party without first obtaining the written permission and consent of Provost & Pritchard Engineering Group, Inc. In the event of unauthorized reuse of these plans by a third party, the third party shall hold the firm of Provost & Pritchard Engineering Group, Inc. harmless, and shall bear the cost of Provost & Pritchard Engineering Group, Inc.'s legal fees associated with defending and enforcing these rights.


PROJECT NAME: CITY OF VISALIA
WATER CONSERVATION PLANT UPGRADES

SHEET TITLE: RECYCLED WATER PIPELINE
RD 68 & AVE 280 INTERSECTION
RD 68 & AVE 280 DETAILS

| | |
|---|---|
| ISSUE DATE: | 12-6-2010 |
| CHECKED BY: | |
| DESIGNED BY: | |
| DRAWN BY: | P&P |
| SCALE: | AS NOTED |
| DWG. NO.: | R-73 |
| SHEET | OF |


V:\Clients\Parsons-1979\197909V1-Visalia WCP Pipelines\DWG\SHEET\197909V1-DT-AVE 280 DETAILS last saved by MICHAELB on 1/4/11 plotted 8/16/2010 2:07:59 PM

## NOTES:

Unless otherwise specified in the special provisions, all temporary warning signs shall have black legend on orange background.

California code are designated by (CA). Otherwise, Federal (MUTCD) codes are shown.

The State of California or its officers or agents shall not be responsible for the accuracy or completeness of electronic copies of this plan sheet.

To get to the Caltrans web site, go to: http://www.dot.ca.gov

# TYPICAL LANE CLOSURE WITH REVERSIBLE CONTROL

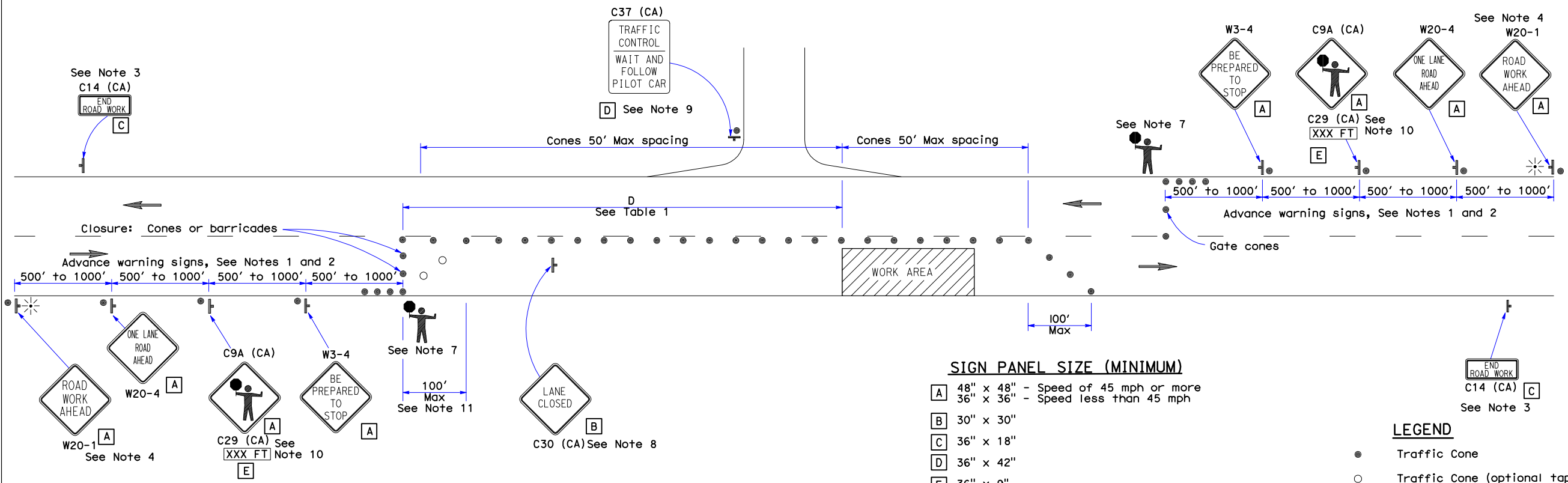


## SIGN PANEL SIZE (MINIMUM)

- A 48" x 48" - Speed of 45 mph or more
  36" x 36" - Speed less than 45 mph
- B 30" x 30"
- C 36" x 18"
- D 36" x 42"
- E 36" x 9"

## LEGEND

- Traffic Cone
- Traffic Cone (optional taper)
- Temporary Sign
- Direction of Travel
- Portable Flashing Beacon
- Flagger

## NOTES:

1. Where approach speeds are low, advance warning signs may be placed at 300' spacing, and closer in urban areas.
2. Each advance warning sign in each direction of travel shall be equipped with at least two flags for daytime closure. Each flag shall be at least 16" x 16" in size and shall be orange or fluorescent red-orange in color. Flashing beacons shall be placed at the locations indicated for lane closure during hours of darkness.
3. A C14 (CA) "END ROAD WORK" sign, as appropriate, shall be placed at the end of the lane control unless the end of work area is obvious, or ends within a larger project's limits.
4. If the W20-1 sign would follow within 2000' of a stationary W20-1 or C11 (CA) "ROAD WORK NEXT _____MILES", use a W20-4 sign for the first advance warning sign.
5. All cones used for lane closures during the hours of darkness shall be fitted with retroreflective bands (or sleeves) as specified in the specifications.
6. Portable delineators, placed at one-half the spacing indicated for traffic cones, may be used instead of cones for daytime closures only.
7. Additional advance flaggers may be required. Flagger should stand in a conspicuous place, be visible to approaching traffic as well as approaching vehicles after the first vehicle has stopped. During the hours of darkness, the flagging-station and flagger shall be illuminated and clearly visible to approaching traffic. The illumination footprint of the lighting on the ground shall be at least 20' in diameter. Place a minimum of four cones at 50' intervals in advance of flagger station as shown.
8. Place C30 (CA) "LANE CLOSED" sign at 500' to 1000' intervals throughout extended work areas. They are optional if the work area is visible from the flagger station.
9. When a pilot car is used, place a C37 (CA) "TRAFFIC CONTROL-WAIT AND FOLLOW PILOT CAR" sign at all intersections within traffic control area. Signs shall be clean and visible at all times.
10. An optional C29 (CA) sign may be placed below the C9A (CA) sign.
11. Traffic cones or barricades may be placed on the optional taper as shown, barricades shall be Type I, II, or III.

## TABLE 1

| Approach Speed | Minimum D | Downgrade Minimum D * | | |
|---|---|---|---|---|
| | | -3% | -6% | -9% |
| mph | ft | ft | ft | ft |
| 25 and below | 155 | 158 | 165 | 173 |
| 30 | 200 | 205 | 215 | 227 |
| 35 | 250 | 257 | 271 | 287 |
| 40 | 305 | 315 | 333 | 354 |
| 45 | 360 | 378 | 400 | 427 |
| 50 | 425 | 446 | 474 | 507 |
| 55 | 495 | 520 | 553 | 593 |
| 60 | 570 | 598 | 638 | 686 |
| 65 | 645 | 682 | 728 | 785 |

* Use on sustained downgrade steeper than -3 percent and longer than 1 mile.

STATE OF CALIFORNIA
DEPARTMENT OF TRANSPORTATION

# TRAFFIC CONTROL SYSTEM FOR LANE CLOSURE ON TWO LANE CONVENTIONAL HIGHWAYS

NO SCALE

T13

2006 STANDARD PLAN T13

| REV. | DATE | BY | DESCRIPTION |
|---|---|---|---|

PARSONS
100 WEST WALNUT STREET
PASADENA, CA 91124
OFFICE: 626.440.2000
FAX: 626.405.3500
WWW.PARSONS.COM

PROJECT NAME: CITY OF VISALIA
WATER CONSERVATION PLANT UPGRADES

SHEET TITLE: RECYCLED WATER PIPELINE
TRAFFIC CONTROL
TRAFFIC CONTROL PLAN

EST. 1968
PROVOST & PRITCHARD
CONSULTING GROUP
An Employee Owned Company
130 NORTH GARDEN STREET
VISALIA, CALIFORNIA 93291-6362
559/636-1166 FAX 559/636-1177
www.ppeng.com

COPYRIGHT 2010 by PROVOST & PRITCHARD ENGINEERING GROUP, INC. ALL RIGHTS RESERVED
The firm of Provost & Pritchard Engineering Group, Inc. expressly reserves its common law copyright and other applicable property rights in these plans. These plans are not to be reproduced, changed, or copied in any form or manner whatsoever, nor are they to be assigned to a third party without first obtaining the written permission and consent of Provost & Pritchard Engineering Group, Inc. In the event of unauthorized reuse of these plans by a third party, the third party shall hold the firm of Provost & Pritchard Engineering Group, Inc. harmless, and shall bear the cost of Provost & Pritchard Engineering Group, Inc.'s legal fees associated with defending and enforcing these rights.

| | |
|---|---|
| ISSUE DATE: | 12-6-2010 |
| CHECKED BY: | |
| DESIGNED BY: | |
| DRAWN BY: | P&P |
| SCALE: | AS NOTED |
| DWG. NO.: | R-74 |
| SHEET | OF |

1/5/2011 4:30 PM V:\Clients\Parsons-1979\1979091-Visalia WCP Pipelines\DWG\SHEET\TRAFFIC CONTROL\1979091-GN-TRAFFIC CONTROL.dwg -Gabriel Do Reynoso

NOT FOR CONSTRUCTION

NOT FOR CONSTRUCTION

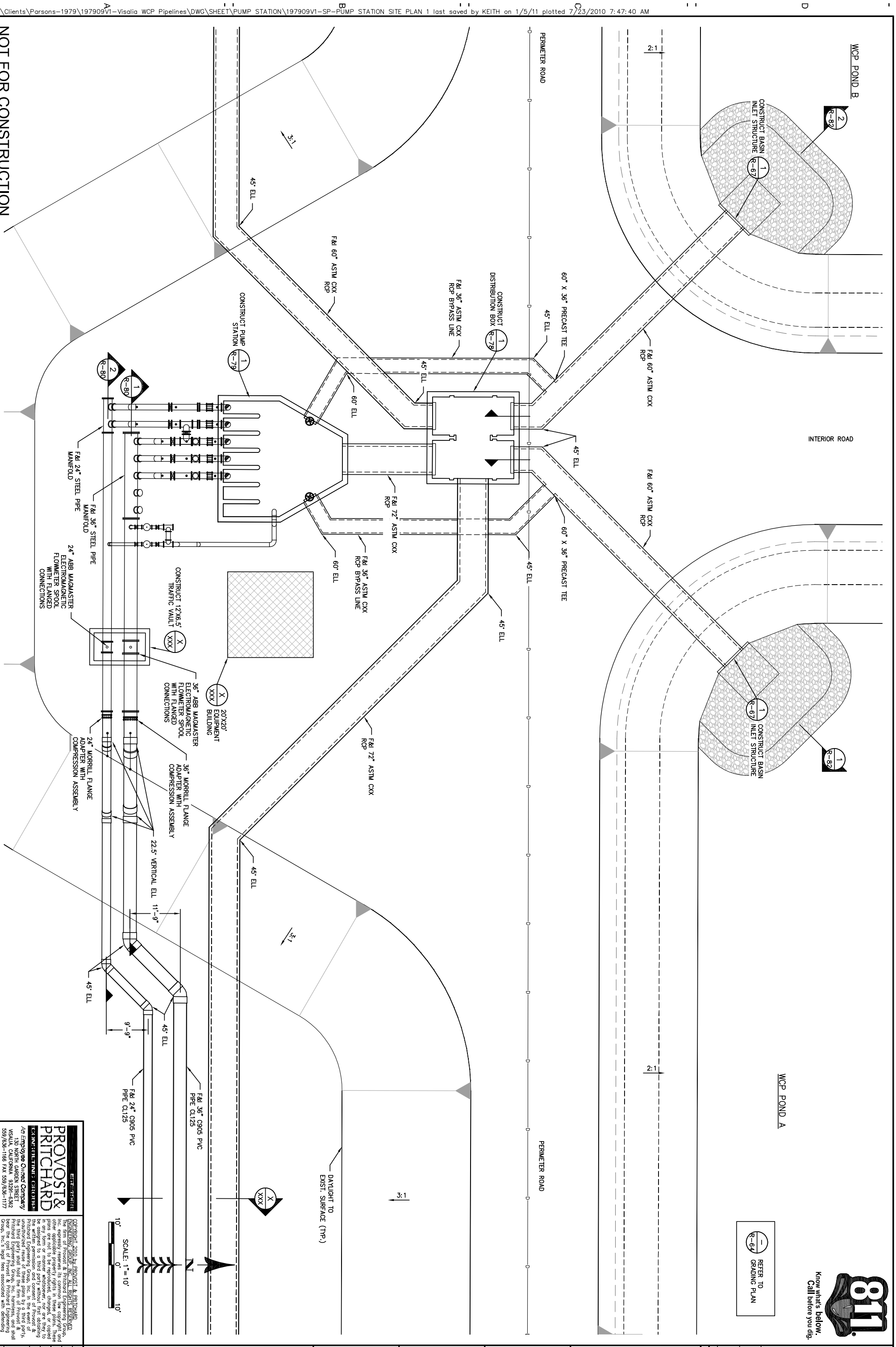


Know what's below. Call before you dig. 811

COPYRIGHT 2010 by PROVOST & PRITCHARD ENGINEERING GROUP, INC. ALL RIGHTS RESERVED
The firm of Provost & Pritchard Engineering Group, Inc. expressly reserves its common law copyright and other applicable property rights in these plans. These plans are not to be reproduced, changed, or copied in any form or manner whatsoever, nor are they to be assigned to a third party without first obtaining the written permission and consent of Provost & Pritchard Engineering Group, Inc. In the event of unauthorized reuse of these plans by a third party, the third party shall hold the firm of Provost & Pritchard Engineering Group, Inc. harmless, and shall bear the cost of Provost & Pritchard Engineering Group, Inc.'s attorneys fees associated with defending and enforcing these rights.

PROVOST & PRITCHARD
EST. 1946
CONSULTING ENGINEERS
An Employee Owned Company
130 NORTH GARDEN STREET
VISALIA, CALIFORNIA 93291-6362
559/636-1166 FAX 559/636-1177
www.ppeng.com

PROJECT NAME: CITY OF VISALIA
WATER CONSERVATION PLANT UPGRADES

SHEET TITLE: RECYCLED WATER PIPELINE
PUMP STATION
PUMP STATION SITE PLAN

PARSONS
100 WEST WALNUT STREET
PASADENA, CA 91124
OFFICE: 626.440.2000
FAX: 626.440.6337
WWW.PARSONS.COM

CITY OF VISALIA
PUBLIC WORKS DEPARTMENT
336 NORTH BEN MADDOX WAY
VISALIA CA. 93292

APPROVED BY: _____ R.C.E. C47262
ENGINEERING SERVICES MANAGER FOR CITY ENGINEER
DATE: _____

APPROVED BY: _____ R.C.E. C47262
ENGINEERING SERVICES MANAGER FOR CITY ENGINEER
DATE: _____

| REV. | DATE | BY | DESCRIPTION |
|---|---|---|---|
| | | | |

ISSUE DATE: 12-6-2010
CHECKED BY:
DESIGNED BY:
DRAWN BY: P&P
SCALE: AS NOTED
DWG. NO.: R-75
SHEET OF

NOT FOR CONSTRUCTION

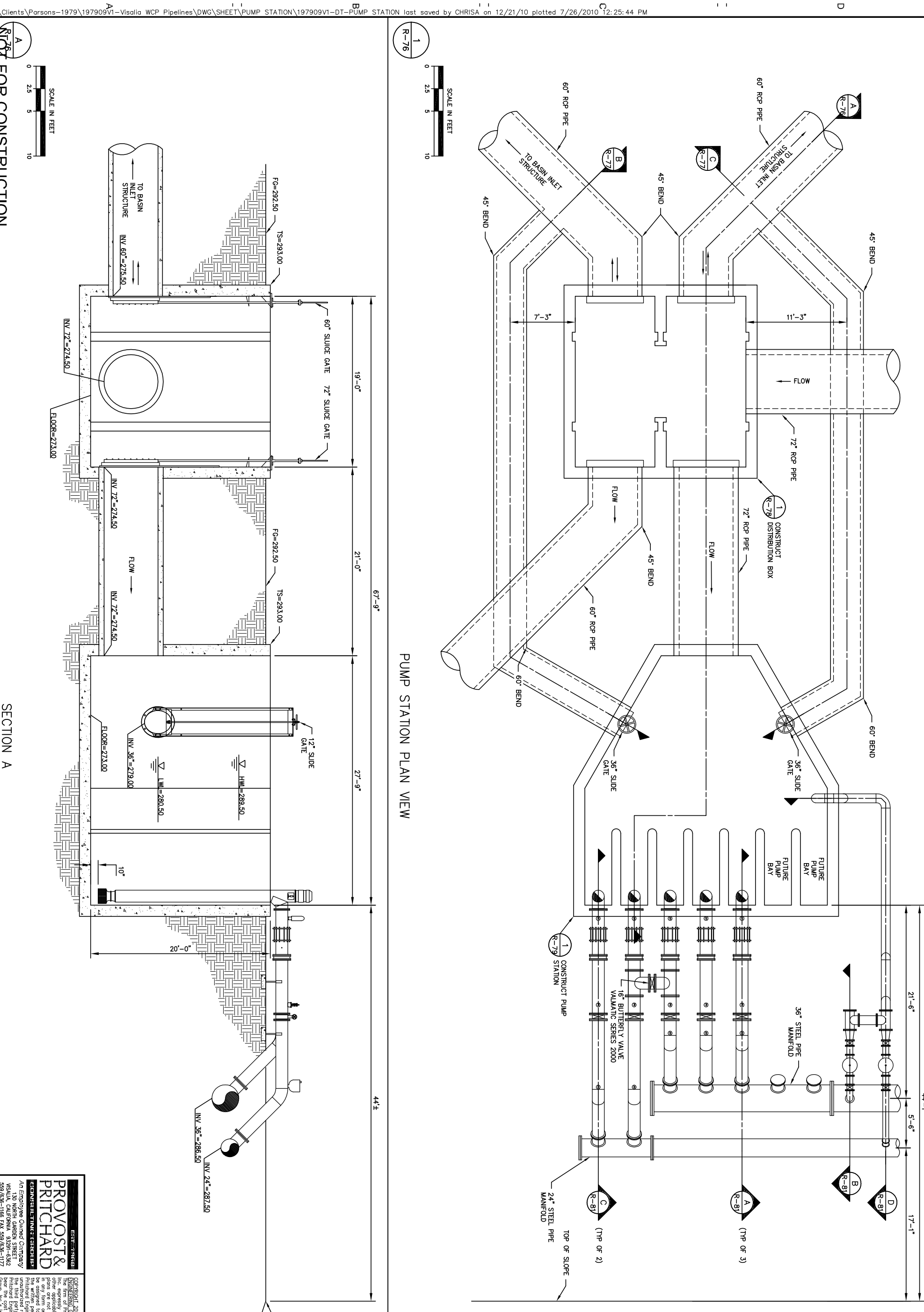


PUMP STATION PLAN VIEW




SECTION A

COPYRIGHT 2010 by PROVOST & PRITCHARD ENGINEERING GROUP, INC. ALL RIGHTS RESERVED
The firm of Provost & Pritchard Engineering Group, Inc. expressly reserves its common law copyright and other applicable property rights in these plans. These plans are not to be reproduced, changed, or copied in any form or manner whatsoever, nor are they to be assigned to a third party without first obtaining the written permission and consent of Provost & Pritchard Engineering Group, Inc. In the event of unauthorized reuse of these plans by a third party, the third party shall hold the firm of Provost & Pritchard Engineering Group, Inc. harmless, and shall bear the cost of Provost & Pritchard Engineering Group, Inc.'s legal fees associated with defending and enforcing these rights.

PROVOST & PRITCHARD
ENGINEERING GROUP
EST. 1956
An Employee Owned Company
130 NORTH GARDEN STREET
VISALIA, CALIFORNIA 93291-6362
559/636-1166 FAX 559/636-1177
www.ppeng.com

PROJECT NAME:
CITY OF VISALIA
WATER CONSERVATION PLANT UPGRADES

SHEET TITLE:
RECYCLED WATER PIPELINE
PUMP STATION
PUMP STATION STRUCTURE

PARSONS
100 WEST WALNUT STREET
PASADENA, CA 91124
OFFICE: 626.440.2000
FAX: 626.440.6337
WWW.PARSONS.COM

CITY OF VISALIA
PUBLIC WORKS DEPARTMENT
336 NORTH BEN MADDOX WAY
VISALIA CA. 93292

APPROVED BY: _____ R.C.E. C47262
ENGINEERING SERVICES MANAGER FOR CITY ENGINEER
DATE: _____

APPROVED BY: _____ R.C.E. C47262
ENGINEERING SERVICES MANAGER FOR CITY ENGINEER
DATE: _____

| REV. | DATE | BY | DESCRIPTION |
|---|---|---|---|

ISSUE DATE: 12-6-2010
CHECKED BY:
DESIGNED BY:
DRAWN BY: P&P
SCALE: AS NOTED
DWG. NO.: R-76
SHEET OF

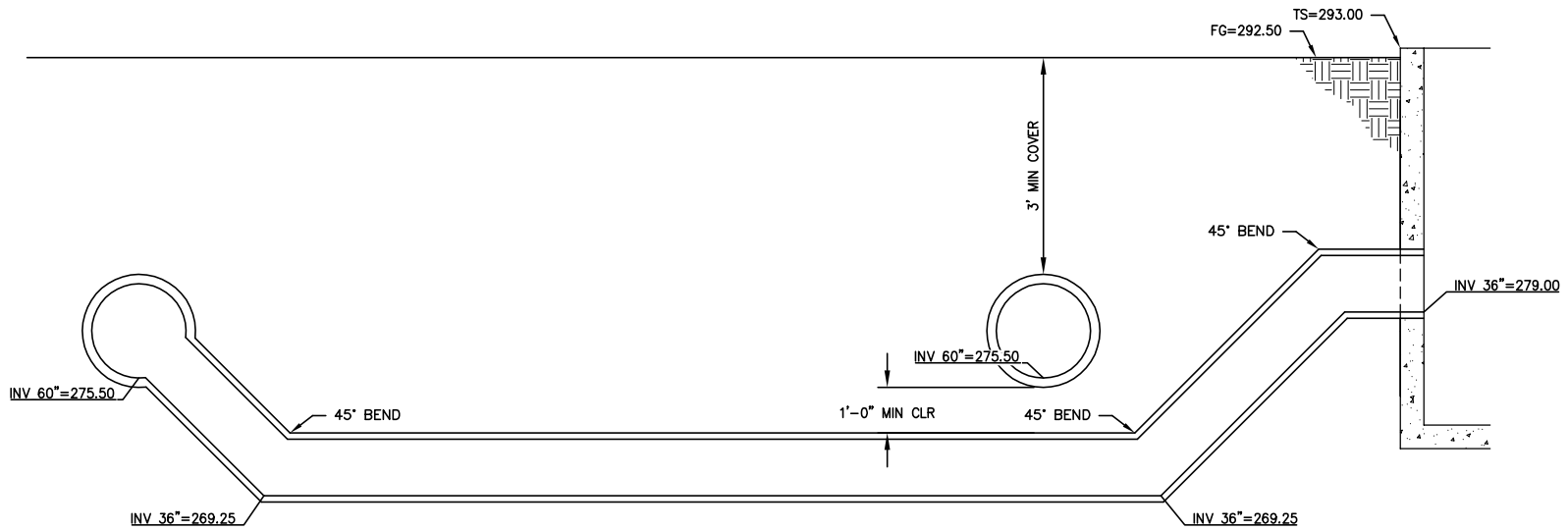


SCALE IN FEET
0 2.5 5 10

SECTION B

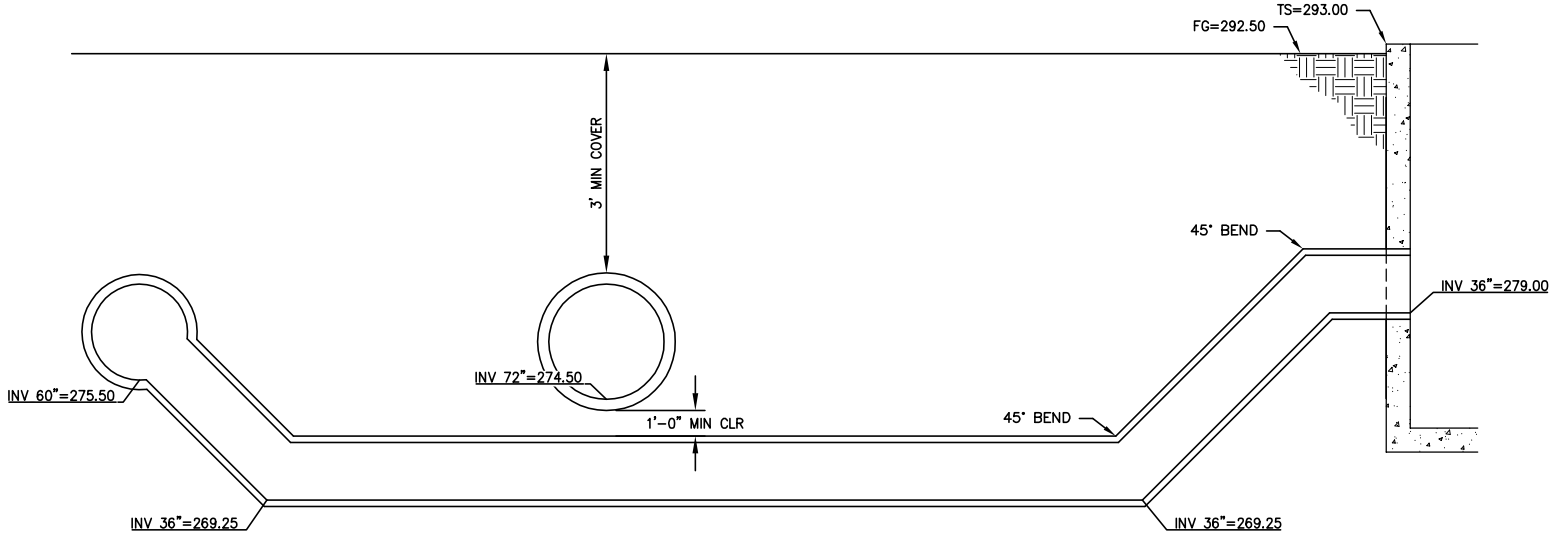


SCALE IN FEET
0 2.5 5 10

SECTION C

NOT FOR CONSTRUCTION

| REV. | DATE | BY | DESCRIPTION |
|---|---|---|---|
| | | | |

APPROVED BY: R.C.E. 047282
ENGINEERING SERVICES MANAGER FOR CITY ENGINEER
DATE: _____

APPROVED BY: R.C.E. 047282
ENGINEERING SERVICES MANAGER FOR CITY ENGINEER
DATE: _____

CITY OF VISALIA
ENGINEERING DEPARTMENT
336 NORTH BEN MADDOX WAY
VISALIA CA. 93292

PARSONS
100 WEST WALNUT STREET
PASADENA, CA 91124
OFFICE: 626.440.2000
FAX: 626.440.4037
WWW.PARSONS.COM

PROJECT NAME: CITY OF VISALIA
WATER CONSERVATION PLANT UPGRADES
RECYCLED WATER PIPELINE
PUMP STATION
SHEET TITLE: PUMP STATION STRUCTURE SECTIONS

EST. 1968
PROVOST& PRITCHARD
CONSULTING GROUP
An Employee Owned Company
130 NORTH GARDEN STREET
VISALIA, CALIFORNIA 93291-6362
559/636-1166 FAX 559/636-1177
www.ppeng.com

COPYRIGHT 2010 by PROVOST & PRITCHARD ENGINEERING GROUP, INC. ALL RIGHTS RESERVED.
The firm of Provost & Pritchard Engineering Group, Inc. expressly reserves its common law copyright and other applicable property rights in these plans. These plans are not to be reproduced, changed, or copied in any form or manner whatsoever, nor are they to be assigned to a third party without first obtaining the written permission and consent of Provost & Pritchard Engineering Group, Inc. In the event of unauthorized reuse of these plans by a third party, the third party shall hold the firm of Provost & Pritchard Engineering Group, Inc. harmless, and shall bear the cost of Provost & Pritchard Engineering Group, Inc.'s legal fees associated with defending and enforcing these rights.

| | |
|---|---|
| ISSUE DATE: | 12-6-2010 |
| CHECKED BY: | |
| DESIGNED BY: | |
| DRAWN BY: | P&P |
| SCALE: | AS NOTED |
| DWG. NO.: | R-77 |
| SHEET | OF |

Last saved by CHRISA on 12/20/10 plotted 12/6/2010 9:56:55 AM
V:\Clients\Parsons-1979\197909V1-Visalia WCP Pipelines\DWG\SHEET\PUMP STATION\197909V1-CS-PUMP STATION SECTIONS2 last saved
V:\Clients\Parsons-1979\197909V1-Visalia WCP Pipelines\DWG\SHEET\PUMP STATION\197909V1-CS-PUMP STATION SECTIONS2.dwg Jan 05, 2011 - 4:33pm

V:\Clients\Parsons-1979\1979091-Visalia WCP Pipelines\DWG\SHEET\PUMP STATION\1979091-CS-DISTRIBUTION BOX STRUCTURAL SECTIONS.dwg Jan 05, 2011 - 4:32pm

# NOT FOR CONSTRUCTION

## SECTION B

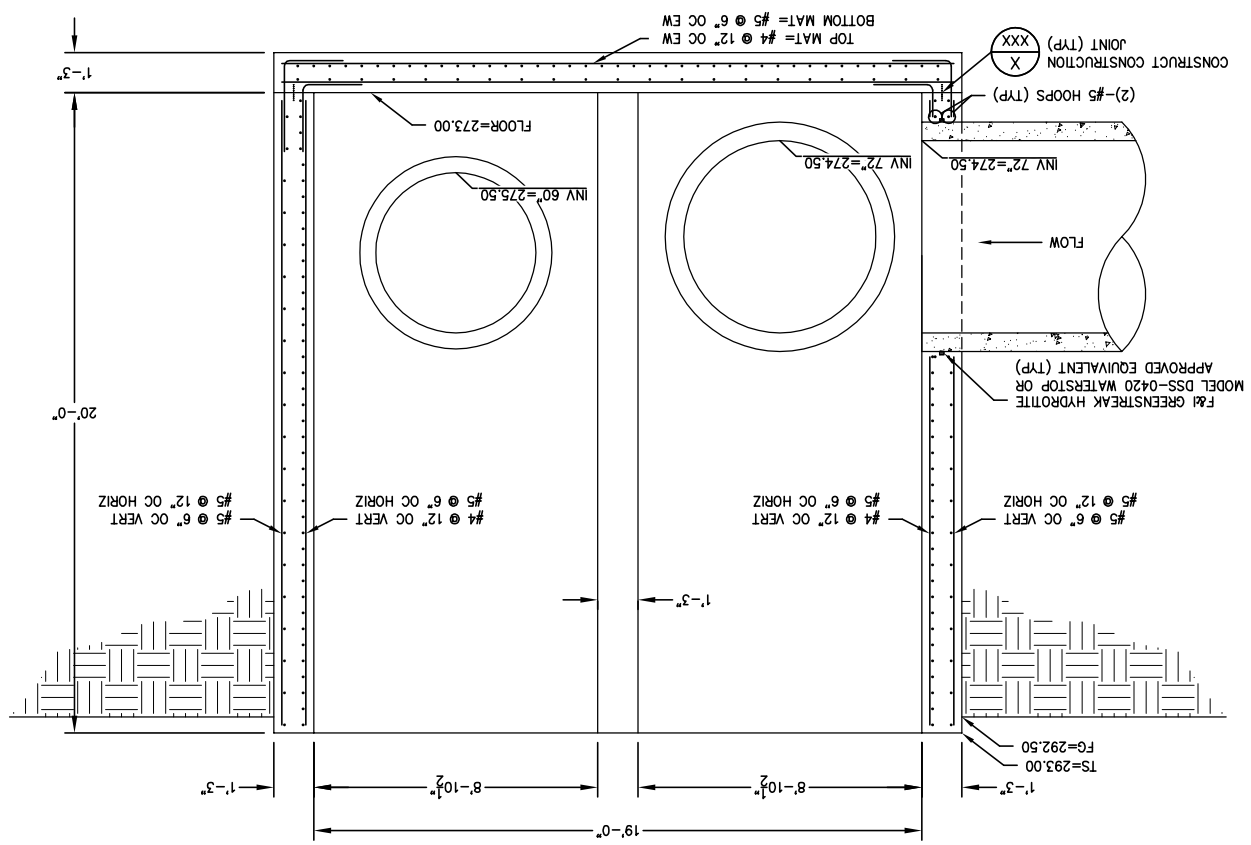


## SECTION C

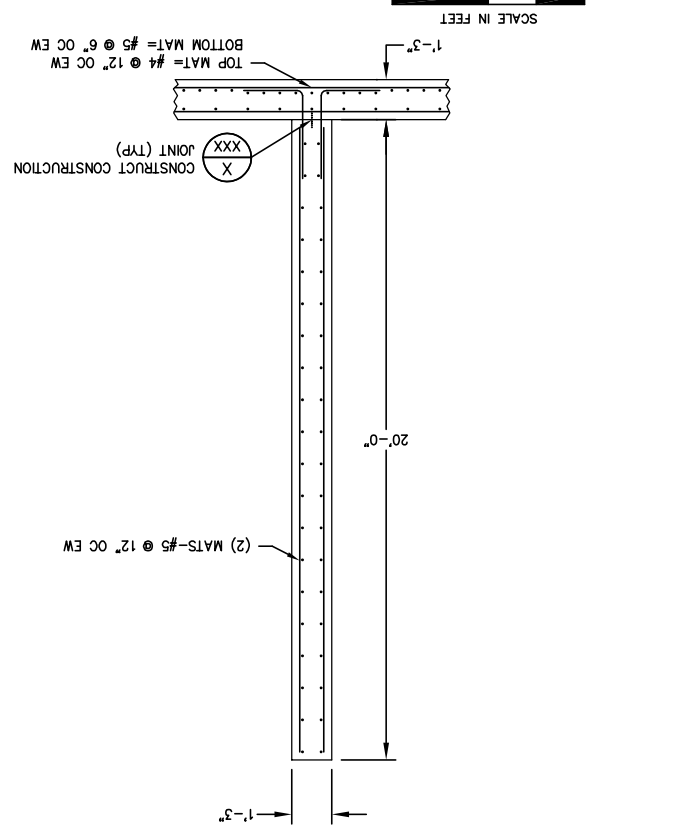


## DETAIL 2

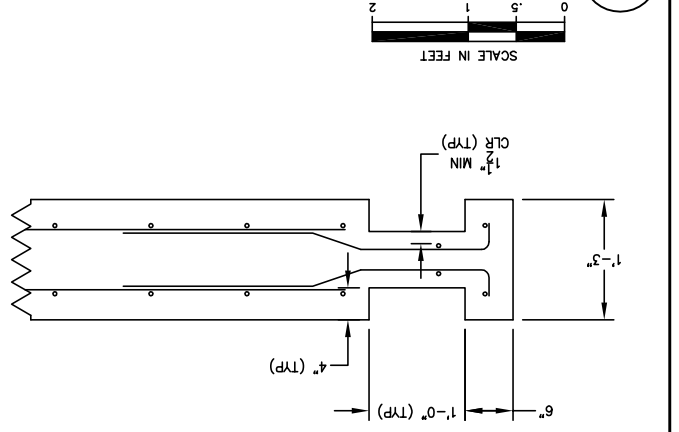


## PLAN VIEW

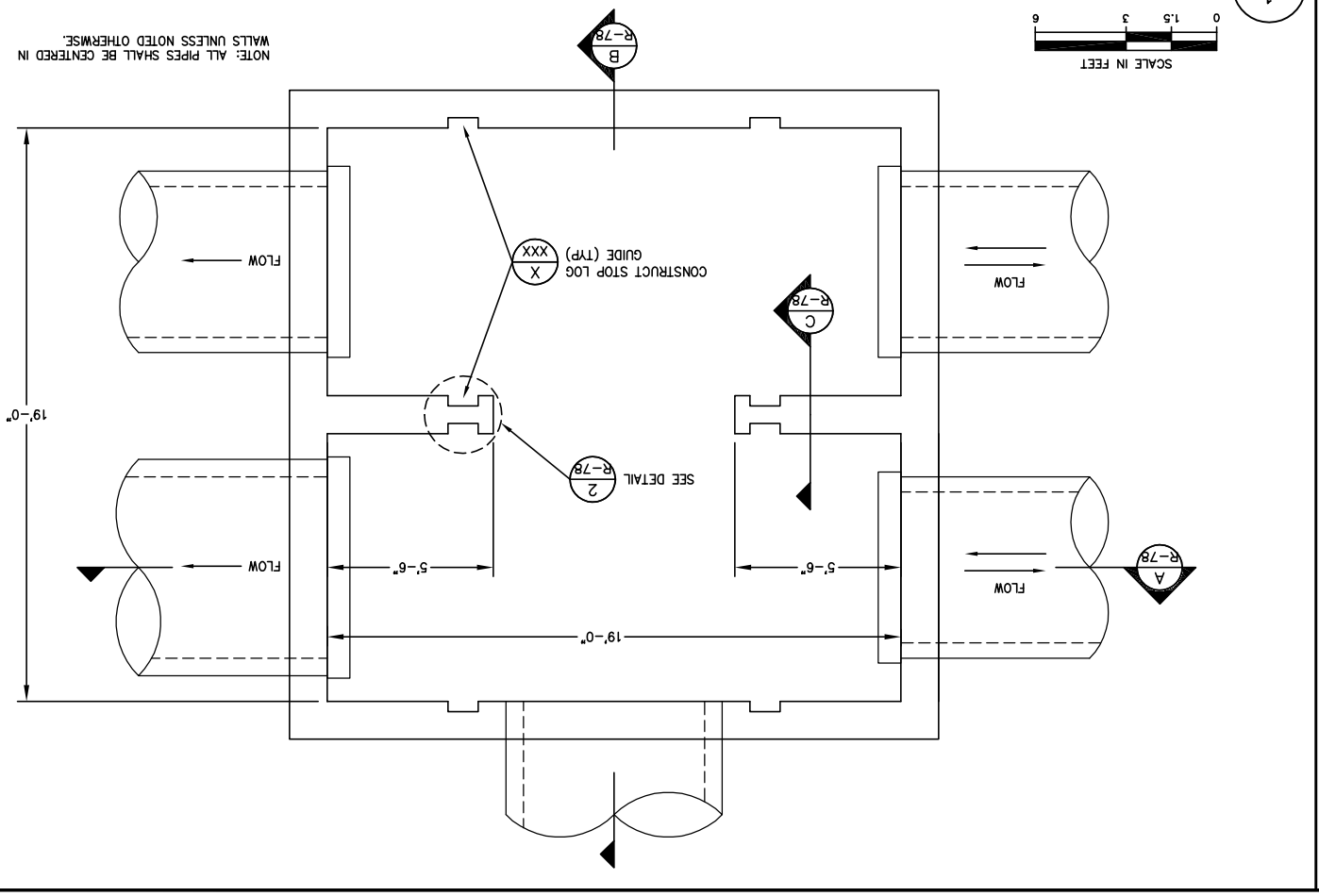


## SECTION A

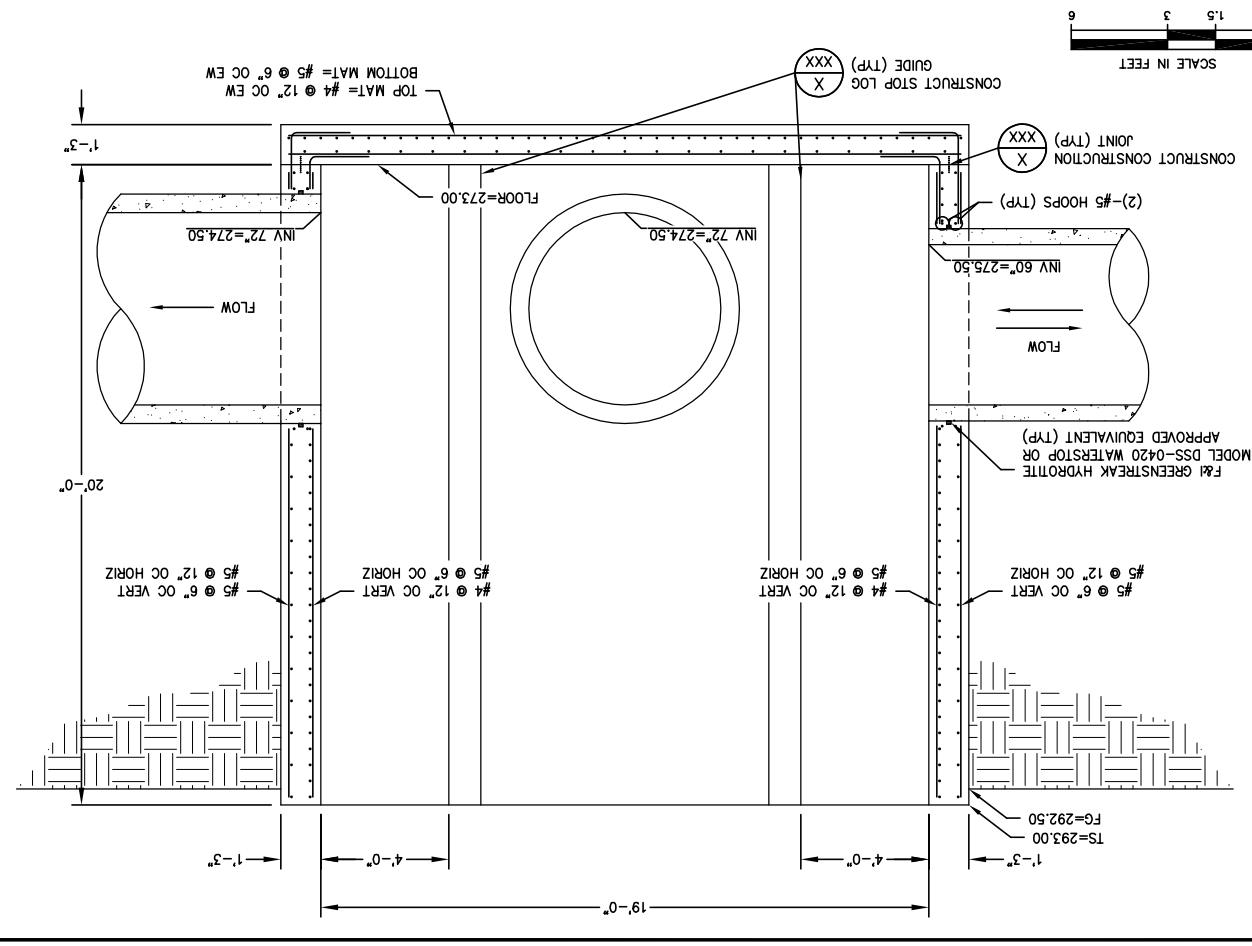


LAST SECTIONS last saved by KEITH on 12/30/10 plotted 12/6/2010 10:01:46 AM

COPYRIGHT 2010 by PROVOST & PRITCHARD ENGINEERING GROUP, INC. ALL RIGHTS RESERVED
The firm of Provost & Pritchard Engineering Group, other applicable property rights in these plans. These plans are not to be reproduced, changed, or copied in any form or manner whatsoever, nor are they to be assigned to a third party without first obtaining the written permission and consent of Provost & Pritchard Engineering Group, Inc. In the event of unauthorized reuse of these plans by a third party, the third party shall hold the firm of Provost & Pritchard Engineering Group, Inc. harmless, and shall bear the cost of Provost & Pritchard Engineering Group, Inc.'s legal fees associated with defending and enforcing these rights.

EST. 1946
PROVOST & PRITCHARD
CONSULTING GROUP
An Employee Owned Company
130 NORTH GARDEN STREET
VISALIA, CALIFORNIA 93291-6362
559/636-1166 FAX 559/636-1177
www.ppeng.com

SHEET OF
R-78

| | |
|---|---|
| ISSUE DATE: | 12-6-2010 |
| CHECKED BY: | |
| DESIGNED BY: | |
| DRAWN BY: | P&P |
| SCALE: | AS NOTED |
| DWG. NO.: | |

PROJECT NAME:
CITY OF VISALIA
WATER CONSERVATION PLANT UPGRADES

SHEET TITLE:
RECYCLED WATER PIPELINE
PUMP STATION
DISTRIBUTION BOX STRUCTURAL SECTIONS

PARSONS
100 WEST WALNUT STREET
PASADENA, CA 91124
(626) 440-6500
FAX (626) 440-6337
WWW.PARSONS.COM

CITY OF VISALIA
ENGINEERING DEPARTMENT
336 NORTH BEN MADDOX WAY
VISALIA, CA. 93292

APPROVED BY:
ENGINEERING SERVICES MANAGER FOR CITY ENGINEER
DATE
R.C.E. 047282

APPROVED BY:
ENGINEERING SERVICES MANAGER FOR CITY ENGINEER
DATE
R.C.E. 047282

| REV. | DATE | BY | DESCRIPTION |
|---|---|---|---|
| | | | |

V:\Clients\Parsons-1979\1979091-Visalia WCP Pipelines\DWG\SHEET\PUMP STATION STRUCTURAL SECTIONS.dwg Jan 05, 2011 - 4:34pm

# NOT FOR CONSTRUCTION

## SECTION B

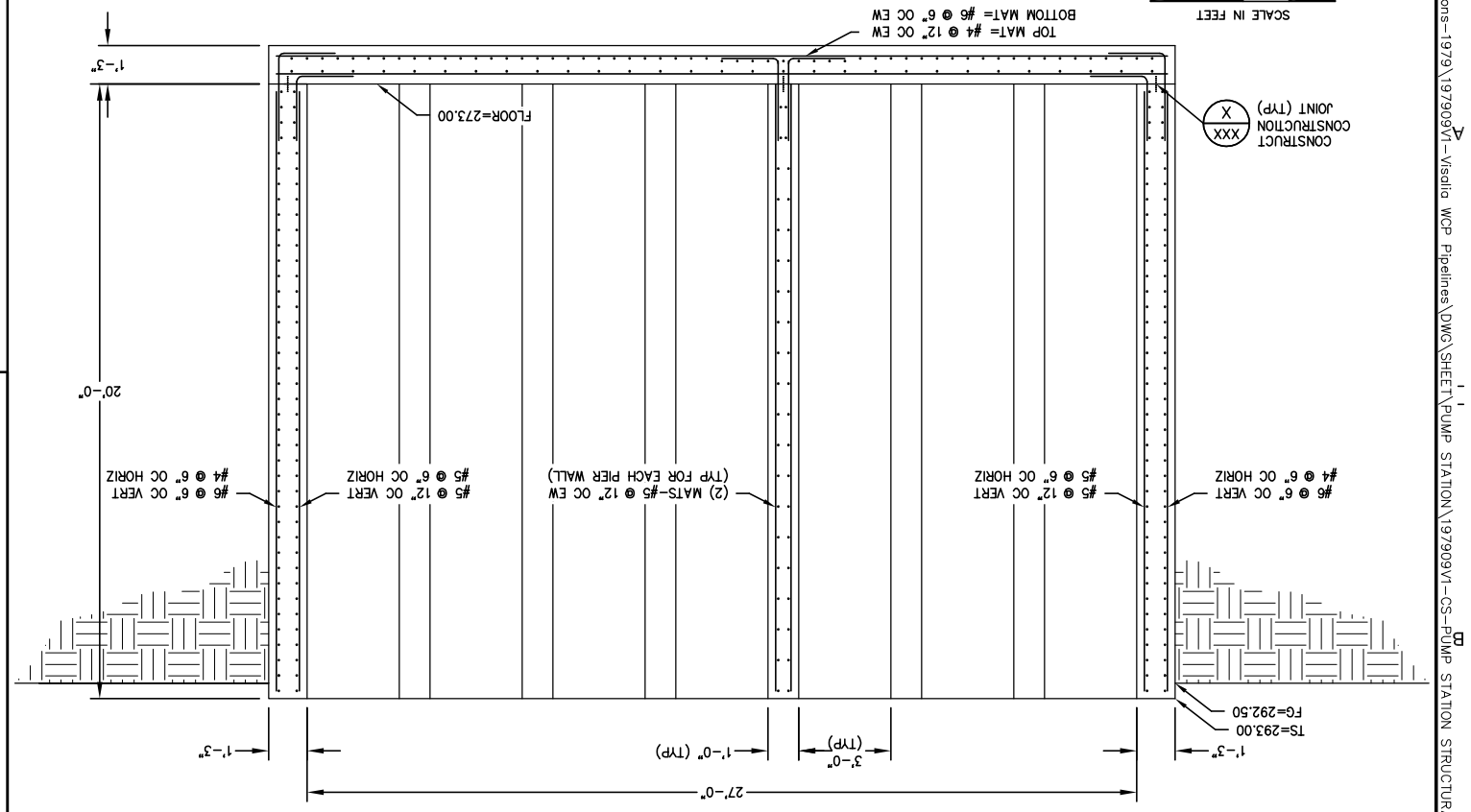


## SECTION A

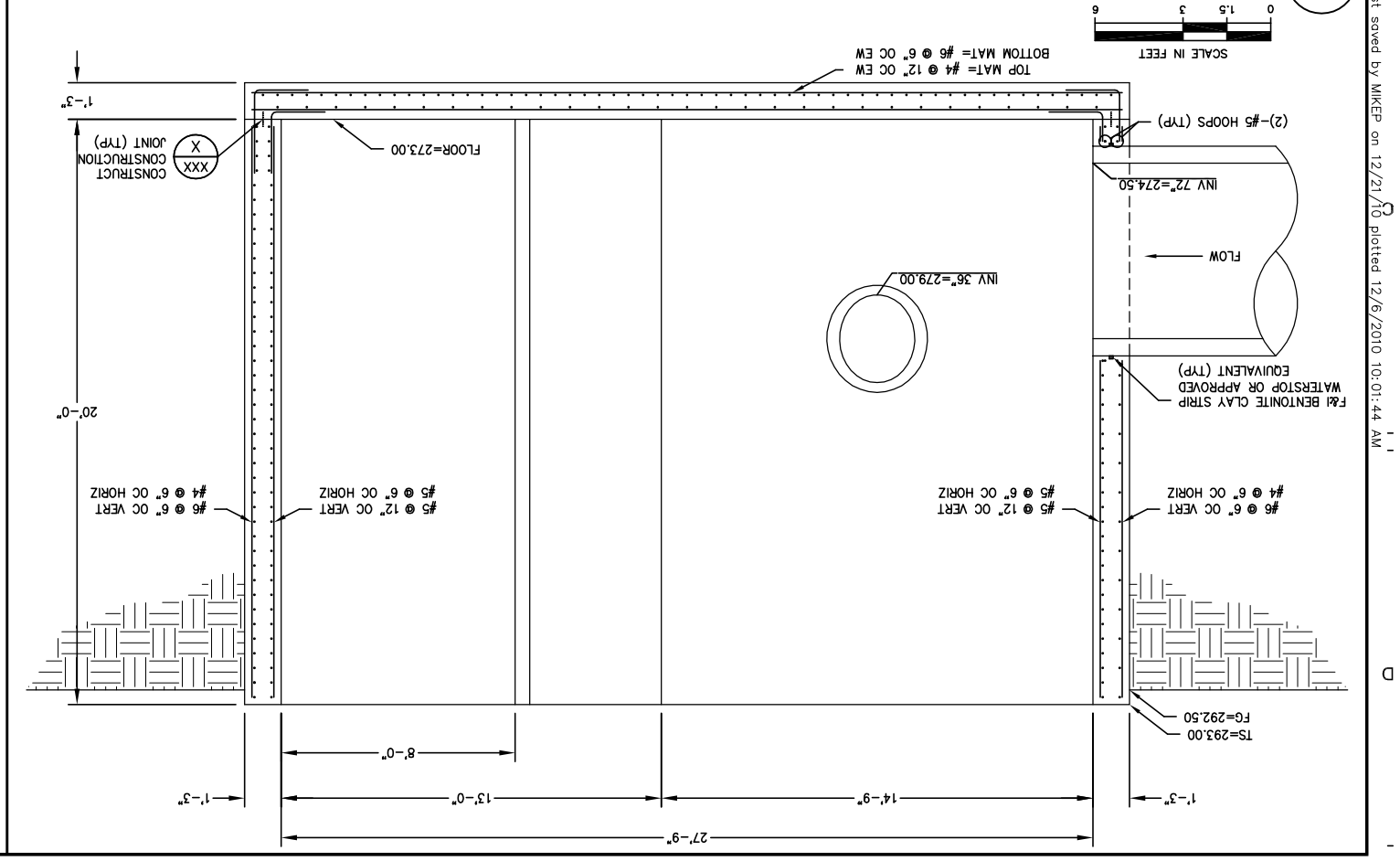


## PLAN VIEW

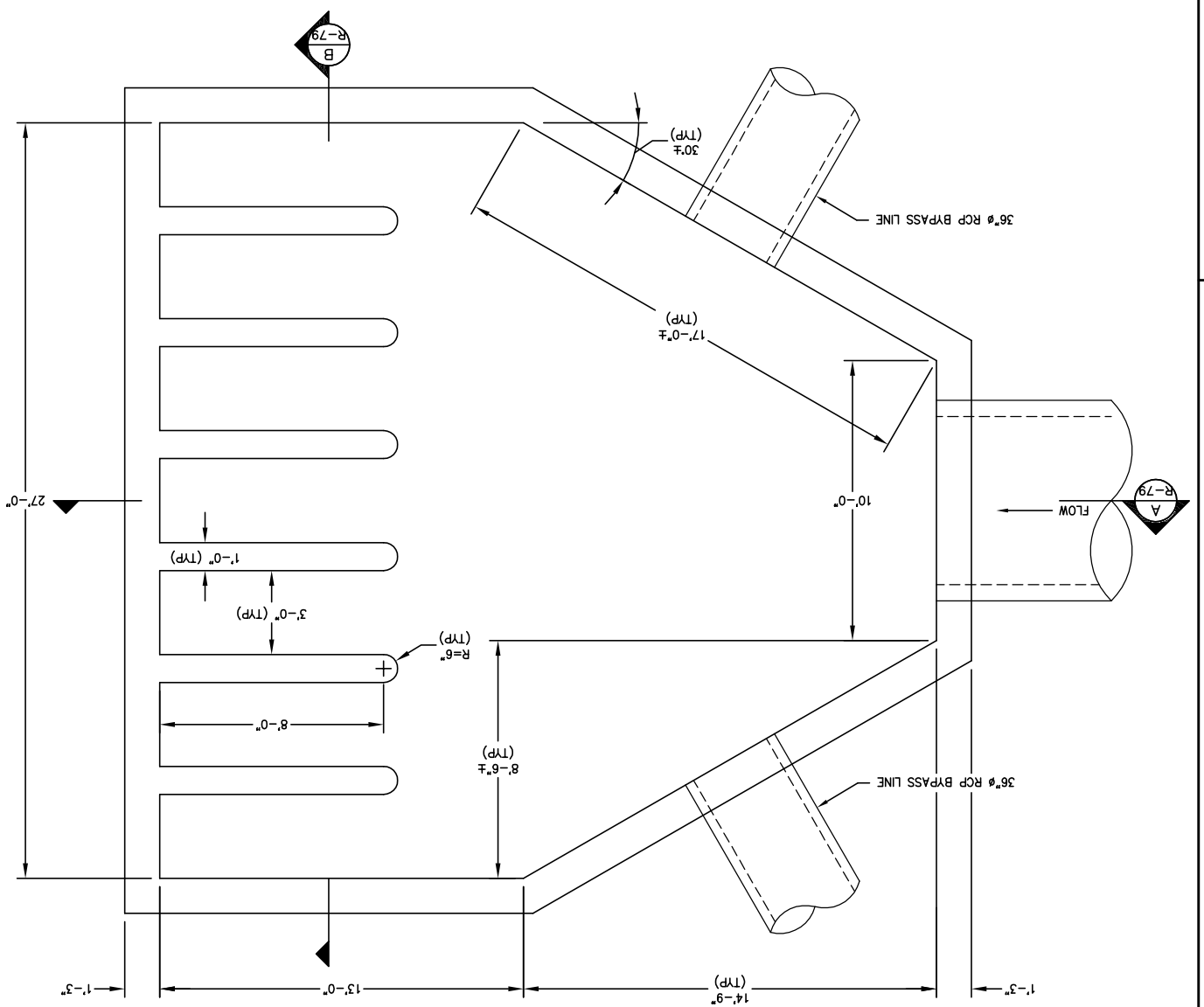


COPYRIGHT 2010 by PROVOST & PRITCHARD
ENGINEERING GROUP, INC. ALL RIGHTS RESERVED
The firm of Provost & Pritchard Engineering Group, Inc. expressly reserves its common law copyright and other applicable property rights in these plans. These plans are not to be reproduced, changed, or copied in any form or manner whatsoever, nor are they to be assigned to a third party without first obtaining the written permission and consent of Provost & Pritchard Engineering Group, Inc. In the event of unauthorized reuse of these plans by a third party, the third party shall hold the firm of Provost & Pritchard Engineering Group, Inc. harmless, and shall bear the cost of Provost & Pritchard Engineering Group, Inc.'s legal fees associated with defending and enforcing these rights.

EST. 1946
PROVOST & PRITCHARD
CONSULTING GROUP
An Employee Owned Company
130 NORTH GARDEN STREET
VISALIA, CALIFORNIA 93291-6362
559/636-1166 FAX 559/636-1177
www.ppeng.com

| | |
|---|---|
| ISSUE DATE: | 12-6-2010 |
| CHECKED BY: | |
| DESIGNED BY: | |
| DRAWN BY: | P&P |
| SCALE: | AS NOTED |
| DWG. NO.: | |
| SHEET | OF |

R-79

PROJECT NAME:
CITY OF VISALIA
WATER CONSERVATION PLANT UPGRADES

SHEET TITLE:
RECYCLED WATER PIPELINE
PUMP STATION
PUMP STATION STRUCTURAL SECTIONS

PARSONS
100 WEST WALNUT STREET
PASADENA, CA 91124
(626) 440-2000
FAX (626) 440-6337
WWW.PARSONS.COM

CITY OF VISALIA
PUBLIC WORKS DEPARTMENT
336 NORTH BEN MADDOX WAY
VISALIA, CA. 93292

APPROVED BY:
ENGINEERING SERVICES MANAGER FOR CITY ENGINEER
DATE:
R.C.E. 047282

APPROVED BY:
ENGINEERING SERVICES MANAGER FOR CITY ENGINEER
DATE:
R.C.E. 047282

| REV. | DATE | BY | DESCRIPTION |
|---|---|---|---|
| | | | |

V:\Clients\Parsons-1979\1979091-Visalia WCP Pipelines\DWG\SHEET\PUMP STATION\1979091-CS-PUMP STATION STRUCTURAL SECTIONS.dwg last saved by MIKEP on 12/21/10 plotted 12/6/2010 10:01:44 AM

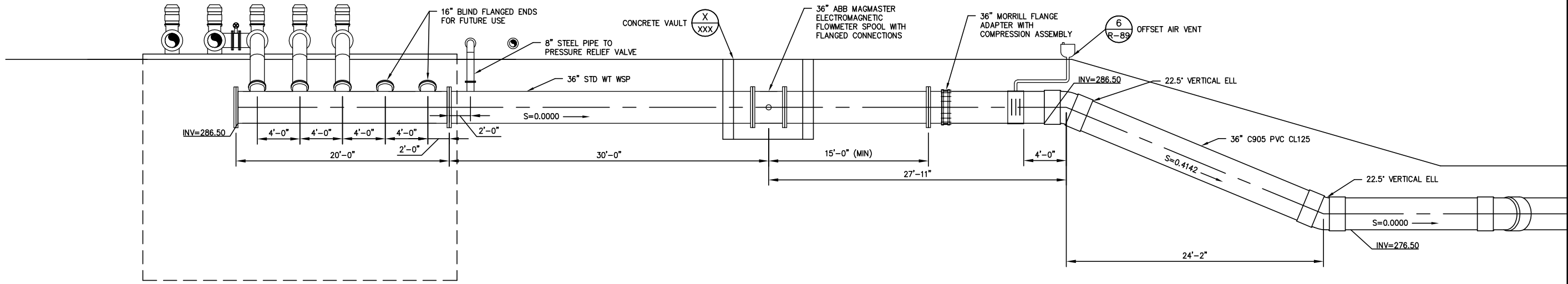


SCALE IN FEET
0 2.5 5 10

1 R-80

36" STEEL PIPE MANIFOLD

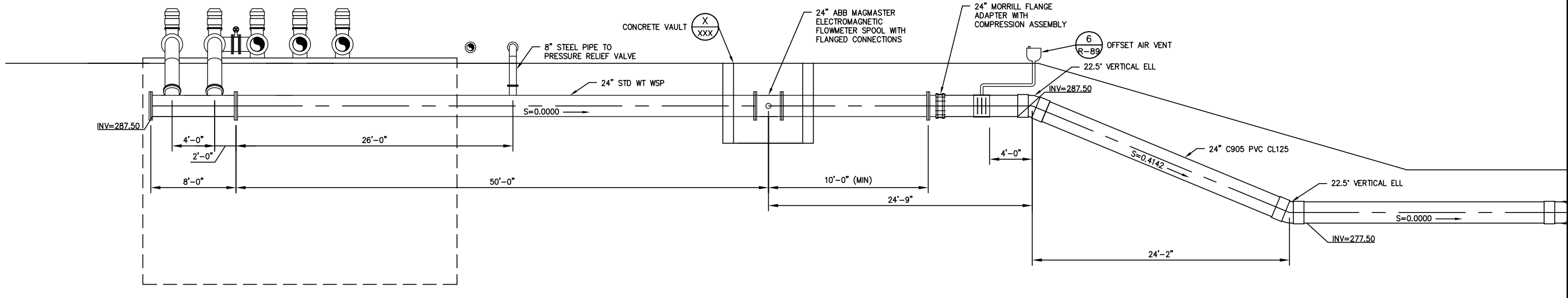


SCALE IN FEET
0 2.5 5 10

2 R-80

24" STEEL PIPE MANIFOLD

NOT FOR CONSTRUCTION

| REV. | DATE | BY | DESCRIPTION |
|---|---|---|---|

APPROVED BY: R.C.E. 047282
ENGINEERING SERVICES MANAGER FOR CITY ENGINEER
DATE:

APPROVED BY: R.C.E. 047282
ENGINEERING SERVICES MANAGER FOR CITY ENGINEER
DATE:

CITY OF VISALIA
ENGINEERING DEPARTMENT
336 NORTH BEN MADDOX WAY
VISALIA CA. 93292

PARSONS
100 WEST WALNUT STREET
PASADENA, CA 91124
OFFICE: 626.440.2000
FAX: 626.440.4037
WWW.PARSONS.COM

PROJECT NAME: CITY OF VISALIA
WATER CONSERVATION PLANT UPGRADES
RECYCLED WATER PIPELINE
PUMP STATION
SHEET TITLE: PIPE MANIFOLD SECTIONS

EST. 1968
PROVOST& PRITCHARD
CONSULTING GROUP
An Employee Owned Company
130 NORTH GARDEN STREET
VISALIA, CALIFORNIA 93291-6362
559/636-1166 FAX 559/636-1177
www.ppeng.com

COPYRIGHT 2010 by PROVOST & PRITCHARD ENGINEERING GROUP, INC. ALL RIGHTS RESERVED.
The firm of Provost & Pritchard Engineering Group, Inc. expressly reserves its common law copyright and other applicable property rights in these plans. These plans are not to be reproduced, changed, or copied in any form or manner whatsoever, nor are they to be assigned to a third party without first obtaining the written permission and consent of Provost & Pritchard Engineering Group, Inc. In the event of unauthorized reuse of these plans by a third party, the third party shall hold the firm of Provost & Pritchard Engineering Group, Inc. harmless, and shall bear the cost of Provost & Pritchard Engineering Group, Inc.'s legal fees associated with defending and enforcing these rights.

| | |
|---|---|
| ISSUE DATE: | 12-6-2010 |
| CHECKED BY: | |
| DESIGNED BY: | |
| DRAWN BY: | P&P |
| SCALE: | AS NOTED |
| DWG. NO.: | R-80 |
| SHEET | OF |

last saved by CHRISA on 12/21/10 plotted 12/6/2010 10:01:42 AM
V:\Clients\Parsons-1979\197909V1-Visalia WCP Pipelines\DWG\SHEET\PUMP STATION\197909V1-CS-PUMP STATION SECTIONS4 last saved
V:\Clients\Parsons-1979\197909V1-Visalia WCP Pipelines\DWG\SHEET\PUMP STATION\197909V1-CS-PUMP STATION SECTIONS4.dwg Jan 05, 2011 - 4:34pm

CONSTRUCTION LEGEND

- AV1 — 3" AIR/VACUUM VALVE APCO MODEL 146
- AV2 — 3" PRESSURE RELIEF VALVE FRESNO VALVES AND CASTINGS PR 600
- AV3 — 3" COMBINATION AIR VALVE APCO MODEL 147C
- BV1 — 16" BUTTERFLY VALVE VALMATIC SERIES 2000
- CV1 — 16" SPLIT DISC CHECK VALVE APCO SERIES 9000
- FC1 — 16" DRESSER STYLE 38 COUPLING
- PS1 — 16" ADJUSTABLE PIPE SADDLE SUPPORT STANDON MODEL S92

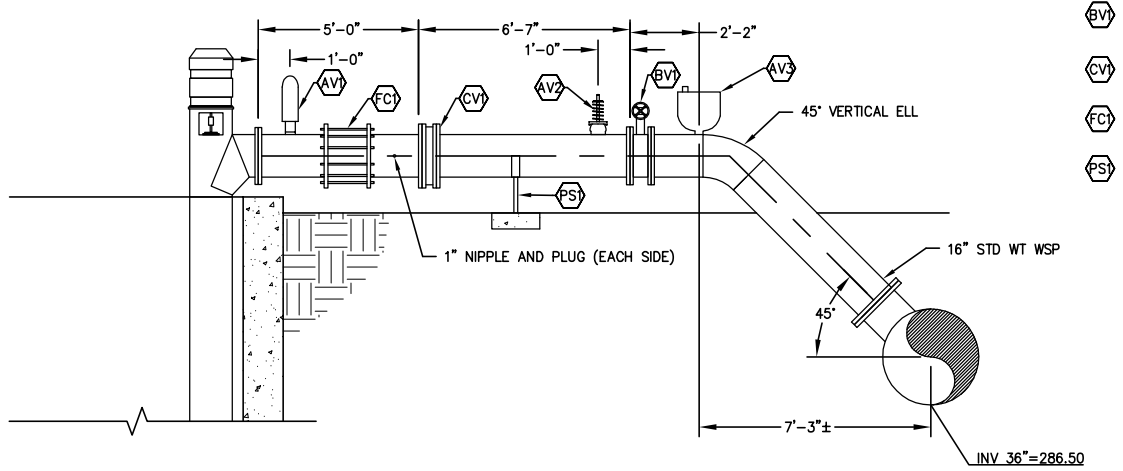


SCALE IN FEET
0 1.5 3 6

A R-81

## PUMP DISCHARGE (36" MANIFOLD)

CONSTRUCTION LEGEND

- BV2 — 8" BUTTERFLY VALVE VALMATIC SERIES 2000
- PS2 — 8" ADJUSTABLE PIPE SADDLE SUPPORT STANDON MODEL S92
- PV1 — 8" PRESSURE RELIEF VALVE CLA-VAL MODEL 50-01

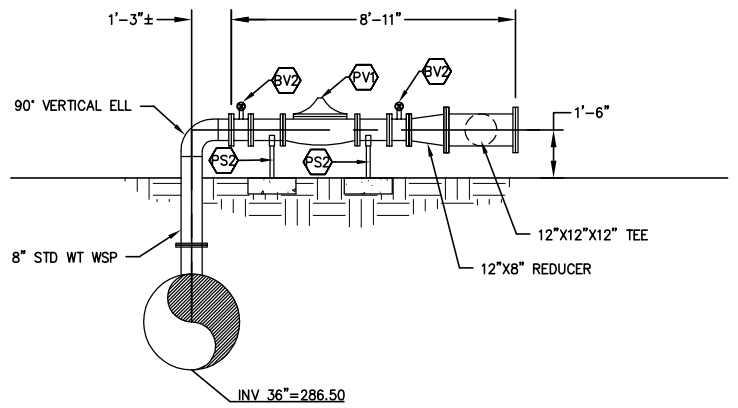


SCALE IN FEET
0 1.5 3 6

B R-81

## 36" MAINLINE RELIEF

CONSTRUCTION LEGEND

- AV1 — 3" AIR/VACUUM VALVE APCO MODEL 146
- AV2 — 3" PRESSURE RELIEF VALVE FRESNO VALVES AND CASTINGS PR 600
- AV3 — 3" COMBINATION AIR VALVE APCO MODEL 147C
- BV1 — 16" BUTTERFLY VALVE VALMATIC SERIES 2000
- CV1 — 16" SPLIT DISC CHECK VALVE APCO SERIES 9000
- FC1 — 16" DRESSER STYLE 38 COUPLING
- PS1 — 16" ADJUSTABLE PIPE SADDLE SUPPORT STANDON MODEL S92

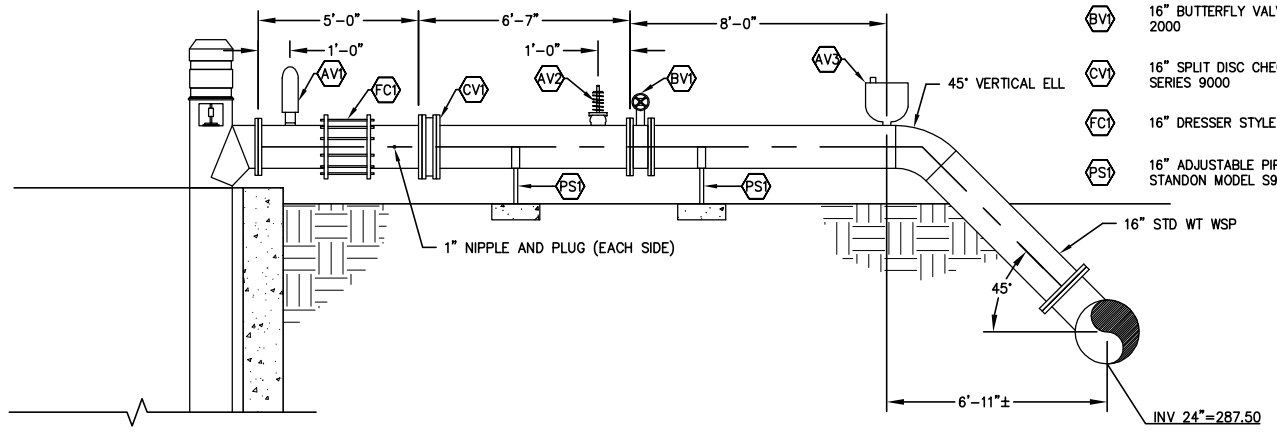


SCALE IN FEET
0 1.5 3 6

C R-81

## PUMP DISCHARGE (24" MANIFOLD)

NOT FOR CONSTRUCTION

CONSTRUCTION LEGEND

- BV2 — 8" BUTTERFLY VALVE VALMATIC SERIES 2000
- PS2 — 8" ADJUSTABLE PIPE SADDLE SUPPORT STANDON MODEL S92
- PV1 — 8" PRESSURE RELIEF VALVE CLA-VAL MODEL 50-01

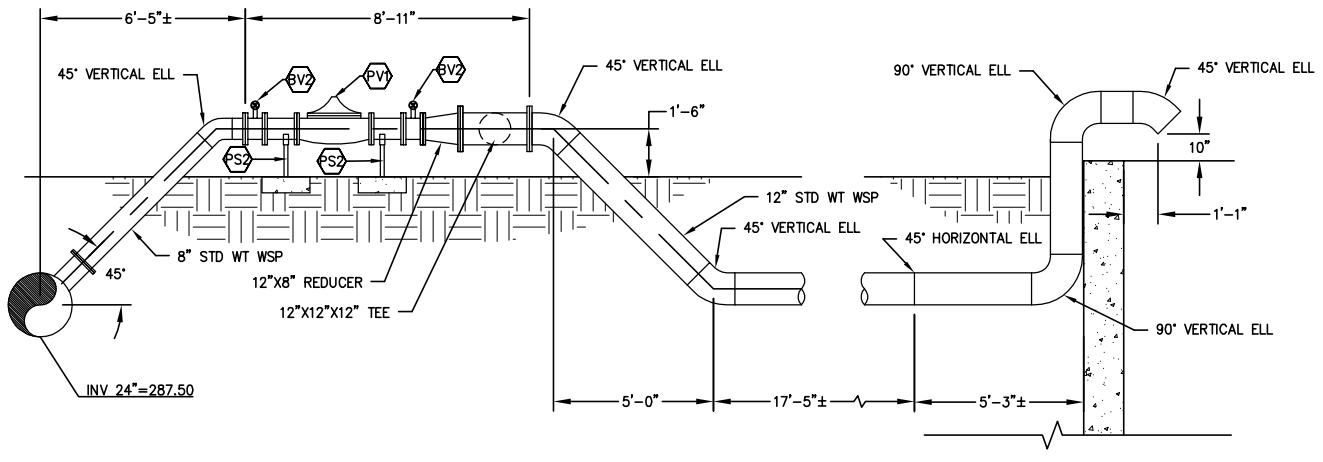


SCALE IN FEET
0 1.5 3 6

D R-81

## 24" MAINLINE RELIEF

| REV. | DATE | BY | DESCRIPTION |
|---|---|---|---|

APPROVED BY:
R.C.E. 047282
ENGINEERING SERVICES MANAGER FOR CITY ENGINEER
DATE:

APPROVED BY:
R.C.E. 047282
ENGINEERING SERVICES MANAGER FOR CITY ENGINEER
DATE:

CITY OF VISALIA
ENGINEERING DEPARTMENT
ROBERT A. MOLDEN
336 NORTH BEN MADDOX WAY
VISALIA CA. 93292


PARSONS
100 WEST WALNUT STREET
PASADENA, CA 91124
OFFICE: 626.440.2000
FAX: 626.440.2630
WWW.PARSONS.COM


PROJECT NAME: CITY OF VISALIA
WATER CONSERVATION PLANT UPGRADES
RECYCLED WATER PIPELINE
PUMP STATION
SHEET TITLE: PUMP DISCHARGE SECTIONS


EST. 1968
PROVOST & PRITCHARD
CONSULTING GROUP
An Employee Owned Company
130 NORTH GARDEN STREET
VISALIA, CALIFORNIA 93291-6362
559/636-1166 FAX 559/636-1177
www.ppeng.com



COPYRIGHT 2010 by PROVOST & PRITCHARD ENGINEERING GROUP, INC. ALL RIGHTS RESERVED
The firm of Provost & Pritchard Engineering Group, Inc. expressly reserves its common law copyright and other applicable property rights in these plans. These plans are not to be reproduced, changed, or copied in any form or manner whatsoever, nor are they to be assigned to a third party without first obtaining the written permission and consent of Provost & Pritchard Engineering Group, Inc. In the event of unauthorized reuse of these plans by a third party, the third party shall hold the firm of Provost & Pritchard Engineering Group, Inc. harmless, and shall bear the cost of Provost & Pritchard Engineering Group, Inc.'s legal fees associated with defending and enforcing these rights.


| | |
|---|---|
| ISSUE DATE: | 12-6-2010 |
| CHECKED BY: | |
| DESIGNED BY: | |
| DRAWN BY: | P&P |
| SCALE: | AS NOTED |
| DWG. NO.: | R-81 |
| SHEET | OF |


V:\Clients\Parsons-1979\197909V1-Visalia WCP Pipelines\DWG\SHEET\PUMP STATION\197909V1-CS-PUMP DISCHARGE SECTIONS last saved by KEITH on 1/5/11 plotted 1/5/2011 10:31:51 AM
V:\Clients\Parsons-1979\197909V1-Visalia WCP Pipelines\DWG\SHEET\PUMP STATION\197909V1-CS-PUMP DISCHARGE SECTIONS.dwg Jan 05, 2011 - 4:34pm

Know what's **below.**
**Call** before you dig.

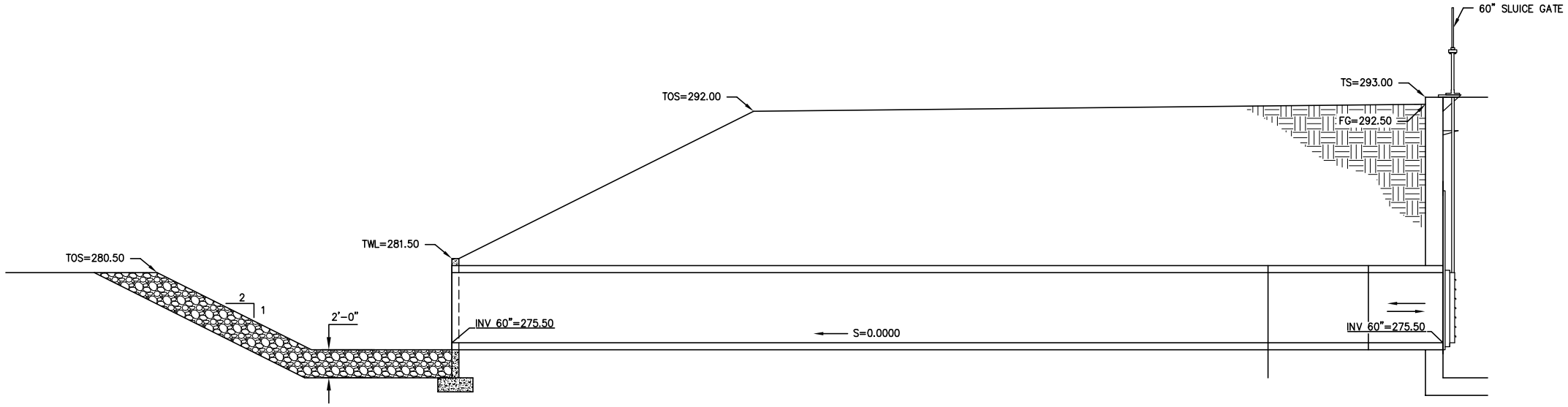


SCALE IN FEET
0 2.5 5 10

SECTION X

SECTION X

SCALE IN FEET
0 2.5 5 10

NOT FOR CONSTRUCTION

| REV. | DATE | BY | DESCRIPTION |
|---|---|---|---|
| | | | |

APPROVED BY:
ENGINEERING SERVICES MANAGER FOR CITY ENGINEER
R.C.E. 047282
DATE:

APPROVED BY:
ENGINEERING SERVICES MANAGER FOR CITY ENGINEER
R.C.E. 047282
DATE:

CITY OF VISALIA
ENGINEERING DEPARTMENT
336 NORTH BEN MADDOX WAY
VISALIA CA. 93292

PARSONS
100 WEST WALNUT STREET
PASADENA, CA 91124
OFFICE: 626.440.2000
FAX: 626.440.4037
WWW.PARSONS.COM

PROJECT NAME: CITY OF VISALIA
WATER CONSERVATION PLANT UPGRADES

SHEET TITLE: RECYCLED WATER PIPELINE
PUMP STATION
BASIN INLET PIPE SECTIONS

EST. 1960
PROVOST& PRITCHARD
CONSULTING GROUP
An Employee Owned Company
130 NORTH GARDEN STREET
VISALIA, CALIFORNIA 93291-6362
559/636-1166 FAX 559/636-1177
www.ppeng.com

COPYRIGHT 2010 by PROVOST & PRITCHARD ENGINEERING GROUP, INC. ALL RIGHTS RESERVED.
The firm of Provost & Pritchard Engineering Group, Inc. expressly reserves its common law copyright and other applicable property rights in these plans. These plans are not to be reproduced, changed, or copied in any form or manner whatsoever, nor are they to be assigned to a third party without first obtaining the written permission and consent of Provost & Pritchard Engineering Group, Inc. In the event of unauthorized reuse of these plans by a third party, the third party shall hold the firm of Provost & Pritchard Engineering Group, Inc. harmless, and shall bear the cost of Provost & Pritchard Engineering Group, Inc.'s legal fees associated with defending and enforcing these rights.

| | |
|---|---|
| ISSUE DATE: | 12-6-2010 |
| CHECKED BY: | |
| DESIGNED BY: | |
| DRAWN BY: | P&P |
| SCALE: | AS NOTED |
| DWG. NO.: | R-82 |
| SHEET | OF |

last saved by CHRISA on 1/5/11 plotted 7/23/2010 8:40:47 AM
V:\Clients\Parsons-1979\197909V1-Visalia WCP Pipelines\DWG\SHEET\PUMP STATION\197909V1-CS-PUMP STATION SECTIONS1 last saved
V:\Clients\Parsons-1979\197909V1-Visalia WCP Pipelines\DWG\SHEET\PUMP STATION\197909V1-CS-PUMP STATION SECTIONS1.dwg Jan 05, 2011 - 4:34pm

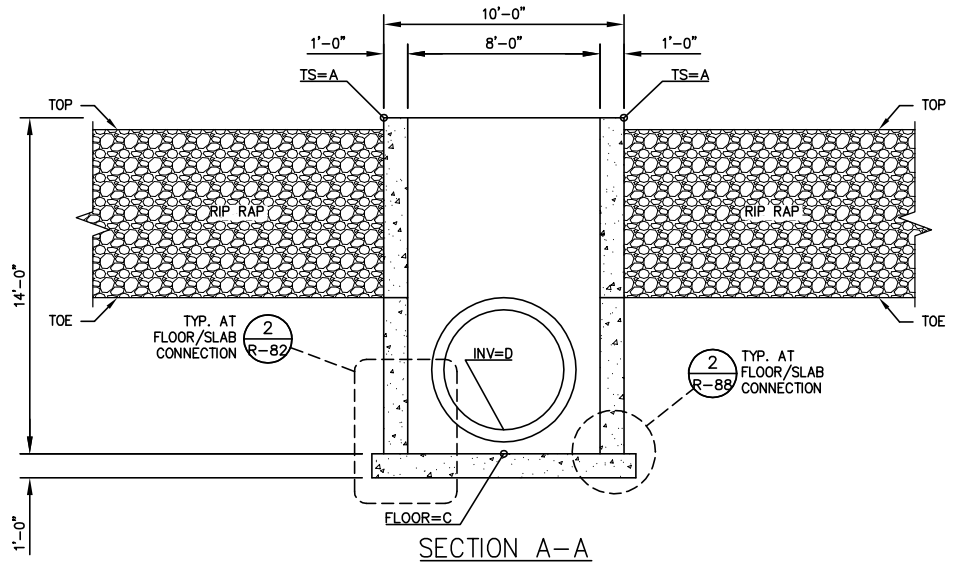


SECTION A–A

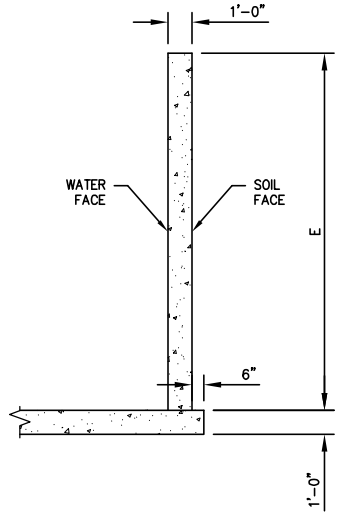


SECTION C–C

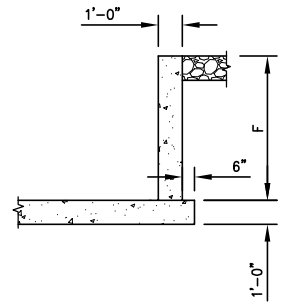


SECTION D–D

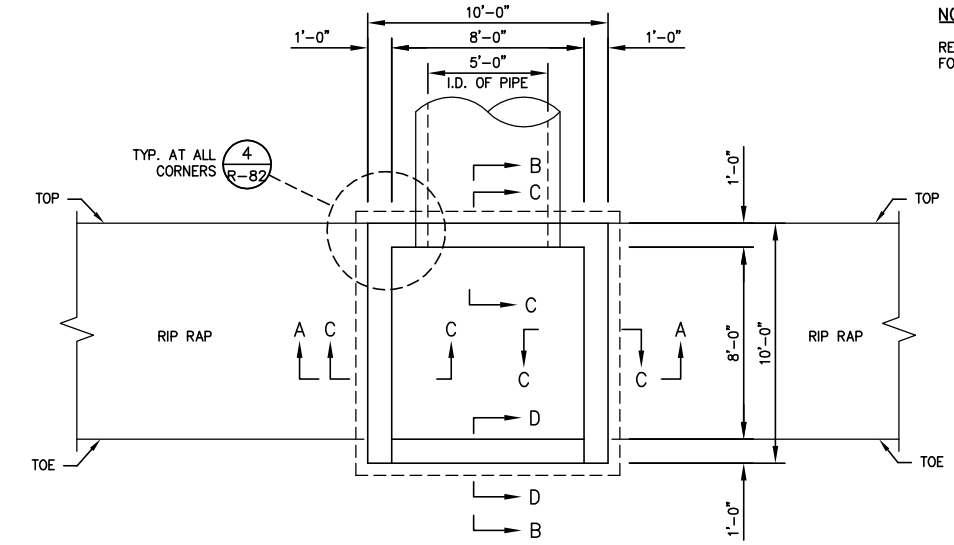


PLAN VIEW

NOTE:

REINFORCING NOT SHOWN FOR CLARITY.

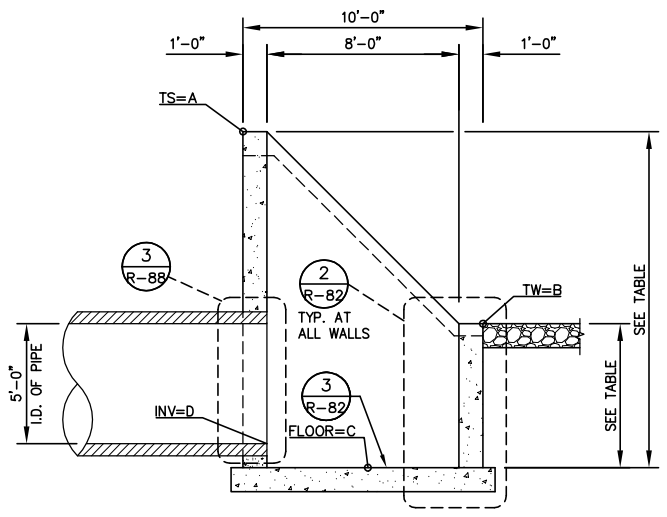


SECTION B–B

SCALE IN FEET

0 2 4 8

1
R-82

STATION 441+50 & STA 898+50 STRUCTURE

| STA 4441+50 & STA 898+50 CONCRETE STRUCTURE | | | |
|---|---|---|---|
| | DESCRIPTION | STA 441+50 | STA 898+50 |
| A | TOP OF STRUCTURE | 276.50 | 277.10 |
| B | TOP OF STEM WALL | 271.50 | 269.60 |
| C | INVERT OF CONC. FLOOR | 265.00 | 262.60 |
| D | INVERT OF PIPE | 266.00 | 263.60 |
| E | HEIGHT OF STRUCTURE | 11.50 | 14.50 |
| F | HEIGHT OF STEM WALL | 6.50 | 7.00 |

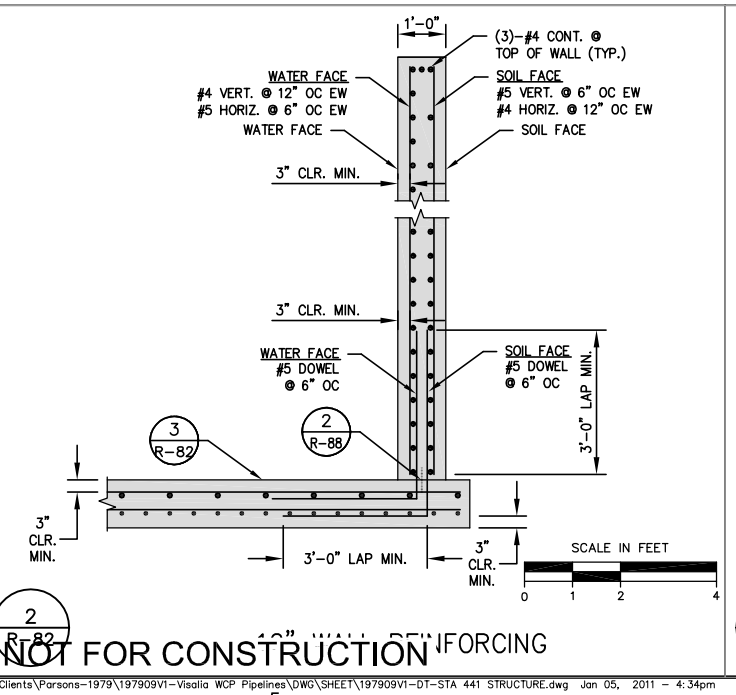


2
R-82

12" WALL REINFORCING

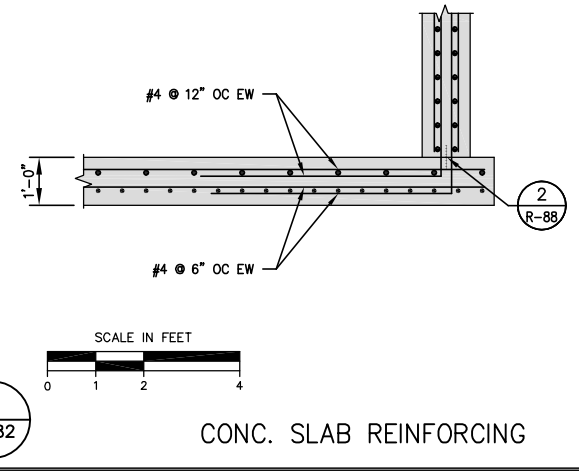


3
R-82

CONC. SLAB REINFORCING

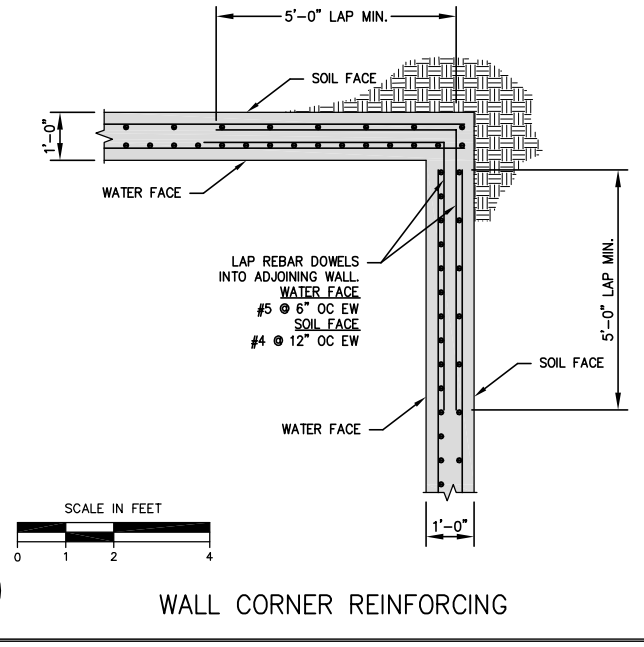


4
R-82

WALL CORNER REINFORCING

NOT FOR CONSTRUCTION

V:\Clients\Parsons-1979\197909V1-Visalia WCP Pipelines\DWG\SHEET\197909V1-DT-STA 441 STRUCTURE.dwg Jan 05, 2011 - 4:34pm

V:\Clients\Parsons-1979\197909V1-Visalia WCP Pipelines\DWG\SHEET\197909V1-DT-STA 441 STRUCTURE last saved by MIKEPR on 12/30/10 plotted 6/14/2010 3:04:31 PM

| REV. | DATE | BY | DESCRIPTION |
|---|---|---|---|
| | | | |

APPROVED BY: ENGINEERING SERVICES MANAGER FOR CITY ENGINEER R.C.E. 047282 DATE:

APPROVED BY: ENGINEERING SERVICES MANAGER FOR CITY ENGINEER R.C.E. 047282 DATE:

CITY OF VISALIA
ENGINEERING DEPARTMENT
336 NORTH BEN MADDOX WAY
VISALIA CA. 93292

PARSONS
100 WEST WALNUT STREET
PASADENA, CA 91124
OFFICE: 626.440.2000
FAX: 626.440.2630
WWW.PARSONS.COM

PROJECT NAME: CITY OF VISALIA
WATER CONSERVATION PLANT UPGRADES
RECYCLED WATER PIPELINE
CONCRETE STRUCTURES

SHEET TITLE: STA 441+50 & STA 898+00 STRUCTURE

EST. 1968
PROVOST & PRITCHARD
CONSULTING GROUP
An Employee Owned Company
130 NORTH GARDEN STREET
VISALIA, CALIFORNIA 93291-6362
559/636-1166 FAX 559/636-1177
www.ppeng.com

COPYRIGHT 2010 by PROVOST & PRITCHARD ENGINEERING GROUP, INC. ALL RIGHTS RESERVED
The firm of Provost & Pritchard Engineering Group, Inc. expressly reserves its common law copyright and other applicable property rights in these plans. These plans are not to be reproduced, changed, or copied in any form or manner whatsoever, nor are they to be assigned to a third party without first obtaining the written permission and consent of Provost & Pritchard Engineering Group, Inc. In the event of unauthorized reuse of these plans by a third party, the third party shall hold the firm of Provost & Pritchard Engineering Group, Inc. harmless, and shall bear the cost of Provost & Pritchard Engineering Group, Inc.'s legal fees associated with defending and enforcing these rights.

| | |
|---|---|
| ISSUE DATE: | 12-6-2010 |
| CHECKED BY: | |
| DESIGNED BY: | |
| DRAWN BY: | P&P |
| SCALE: | AS NOTED |
| DWG. NO.: | R-82 |
| SHEET | OF |

V:\Clients\Parsons-1979\197909V1-Visalia WCP Pipelines\DWG\SHEET\197909V1-DT-STA 442 WEIR STRUCTURE last saved by MICHAELB on 12/22/10 plotted 6/15/2010 3:14:07 PM

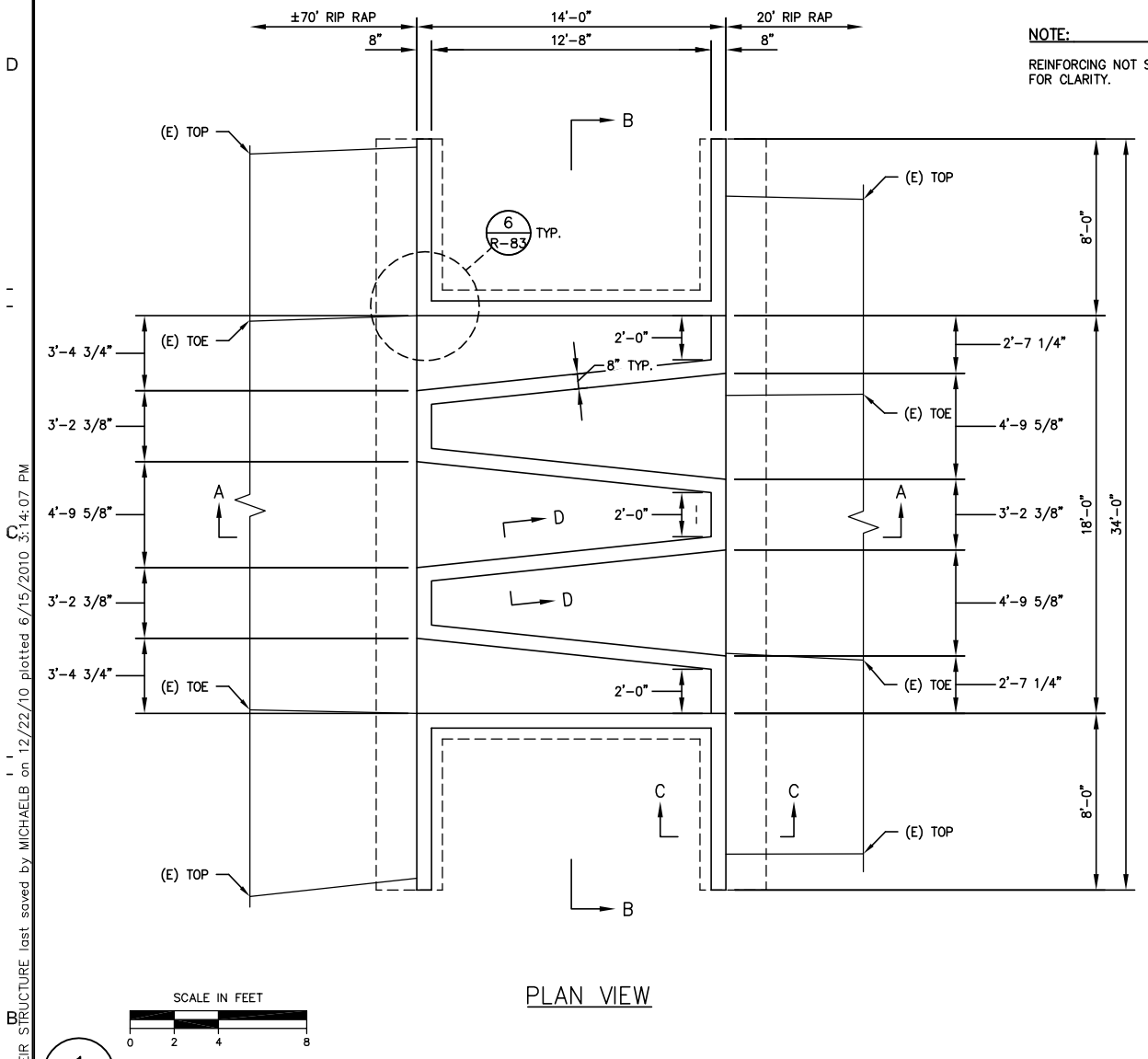


NOTE:

REINFORCING NOT SHOWN FOR CLARITY.

PLAN VIEW

SCALE IN FEET 0 2 4 8

1 R-83

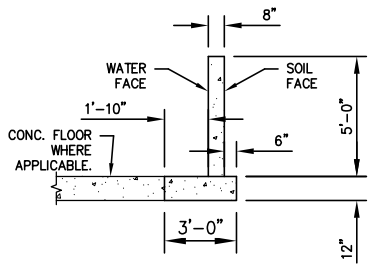


SECTION C–C

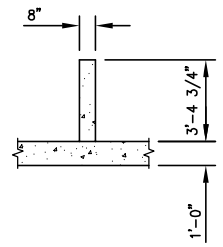


SECTION D–D

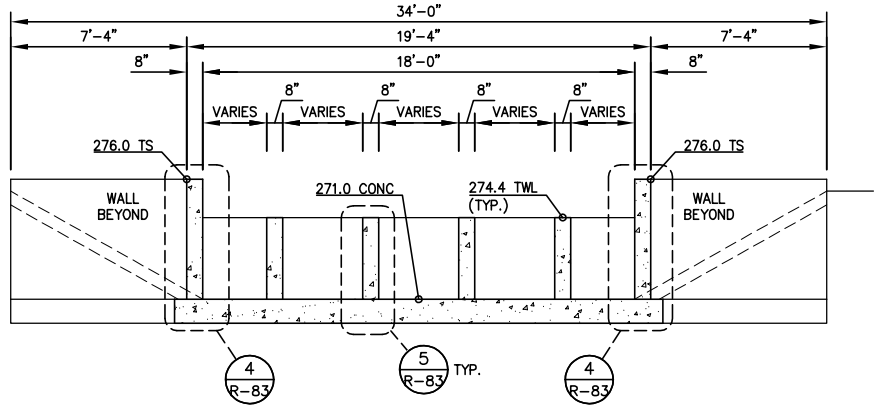


SECTION B–B

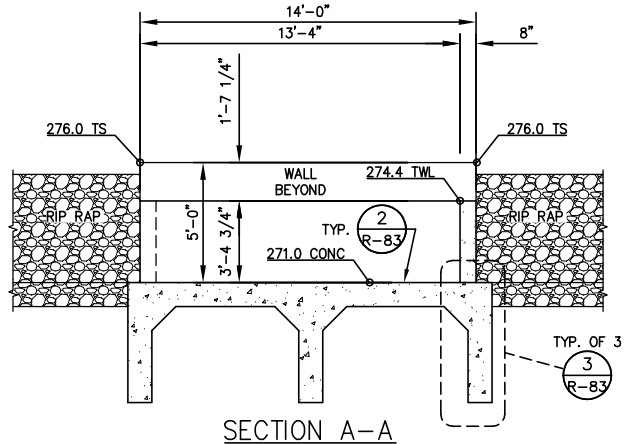


SECTION A–A

STATION 442+00 WEIR STRUCTURE

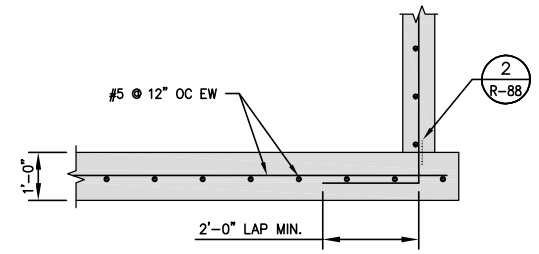


2 R-83

CONC. SLAB REINFORCING

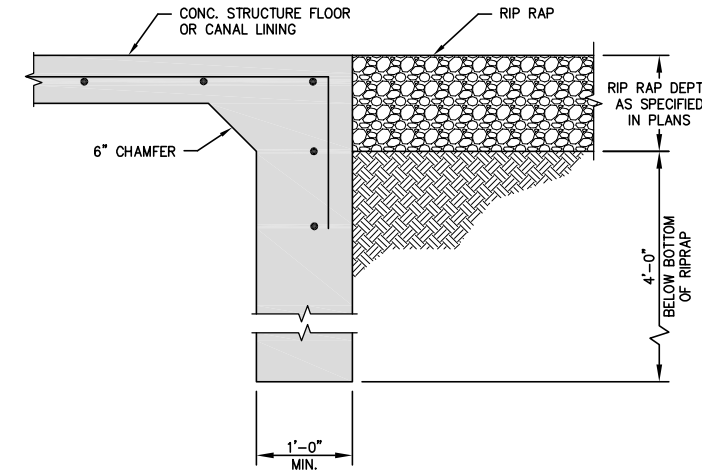


3 R-83

CONC. CUTOFF WALL

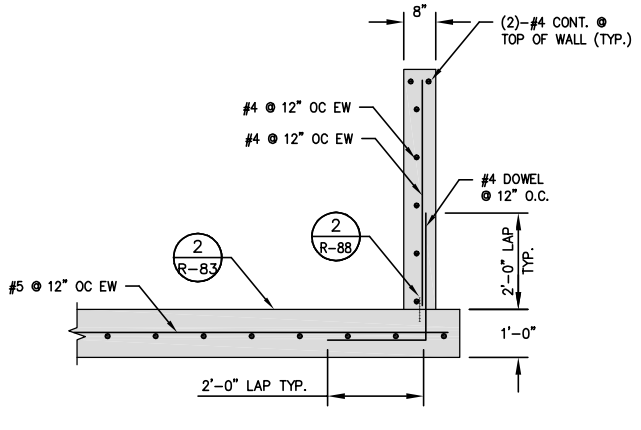


4 R-83

2" WALL REINFORCING

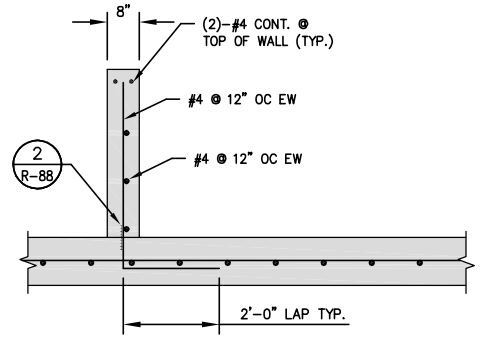


5 R-83

WEIR WALL REINFORCING

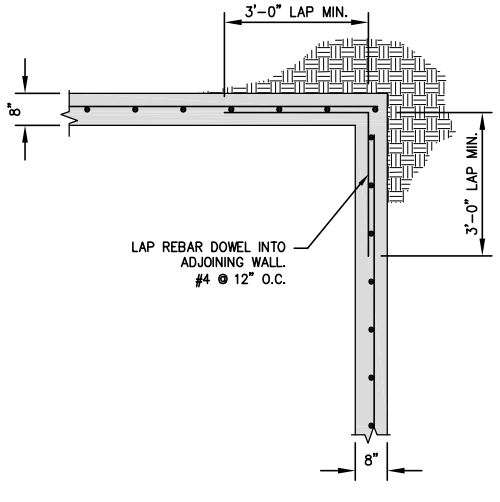


6 R-83

WALL CORNER REINFORCING

NOT FOR CONSTRUCTION

V:\Clients\Parsons-1979\197909V1-Visalia WCP Pipelines\DWG\SHEET\197909V1-DT-STA 442 WEIR STRUCTURE.dwg Jan 05, 2011 - 4:35pm

| REV. | DATE | BY | DESCRIPTION |
|---|---|---|---|
| | | | |

APPROVED BY: R.C.E. 047982
ENGINEERING SERVICES MANAGER FOR CITY ENGINEER
DATE:

APPROVED BY: R.C.E. 047982
ENGINEERING SERVICES MANAGER FOR CITY ENGINEER
DATE:

CITY OF VISALIA
ENGINEERING DEPARTMENT
336 NORTH BEN MADDOX WAY
VISALIA CA. 93292

PARSONS
100 WEST WALNUT STREET
PASADENA, CA 91124
OFFICE: 626.440.2000
FAX: 626.440.6207
WWW.PARSONS.COM

PROJECT NAME: CITY OF VISALIA
WATER CONSERVATION PLANT UPGRADES
RECYCLED WATER PIPELINE
CONCRETE STRUCTURES
STA 442+00 WEIR STRUCTURE

SHEET TITLE:

EST. 1968
PROVOST & PRITCHARD
CONSULTING GROUP
An Employee Owned Company
130 NORTH GARDEN STREET
VISALIA, CALIFORNIA 93291-6362
559/636-1166 FAX 559/636-1177
www.ppeng.com

COPYRIGHT 2010 by PROVOST & PRITCHARD ENGINEERING GROUP, INC. ALL RIGHTS RESERVED.
The firm of Provost & Pritchard Engineering Group, Inc. expressly reserves its common law copyright and other applicable property rights in these plans. These plans are not to be reproduced, changed, or copied in any form or manner whatsoever, nor are they to be assigned to a third party without first obtaining the written permission and consent of Provost & Pritchard Engineering Group, Inc. In the event of unauthorized reuse of these plans by a third party, the third party shall hold the firm of Provost & Pritchard Engineering Group, Inc. harmless, and shall bear the cost of Provost & Pritchard Engineering Group, Inc.'s legal fees associated with defending and enforcing these rights.

| | |
|---|---|
| ISSUE DATE: | 12-6-2010 |
| CHECKED BY: | |
| DESIGNED BY: | |
| DRAWN BY: | P&P |
| SCALE: | AS NOTED |
| DWG. NO.: | R-83 |
| SHEET | OF |

V:\Clients\Parsons-1979\197909V1-Visalia WCP Pipelines\DWG\SHEET\197909V1-DT-STA 465 DISTRIBUTION BOX last saved by MICHAELB on 12/22/10 plotted 6/15/2010 3:45:24 PM

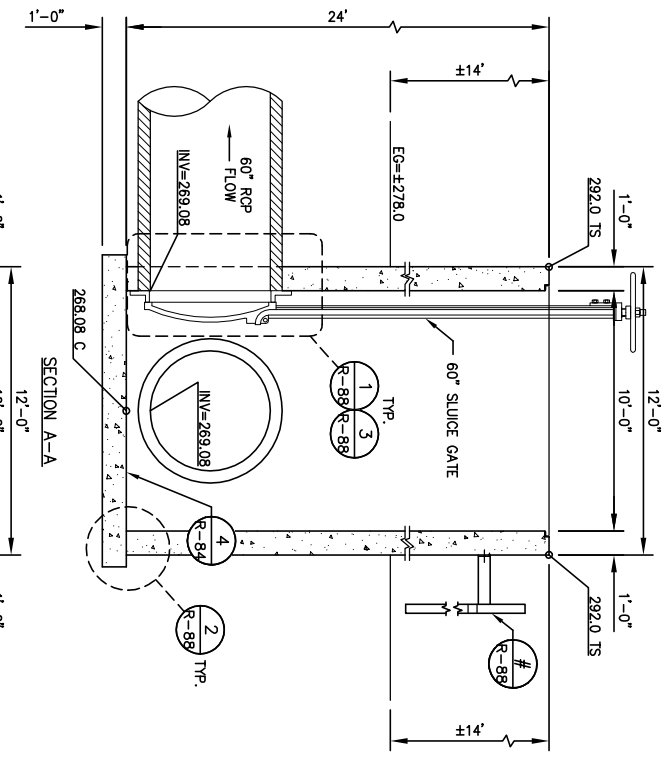


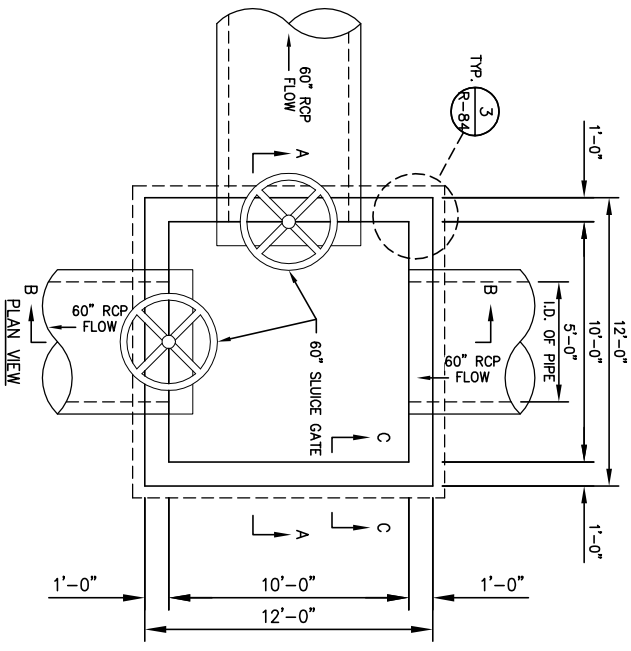


## STATION 465+00 DISTRIBUTION BOX

NOTES

1. REINFORCING NOT SHOWN FOR CLARITY.
2. 60" SLUICE GATE TO BE XXXXXXXXXXXXXX XXXXXXXXXXXXXXXXXXXX. INSTALL PER MANUFACTURERS. RECOMMENDATIONS.

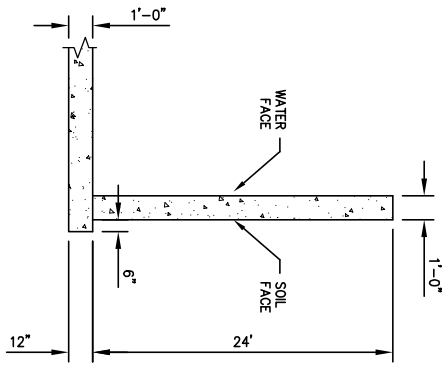


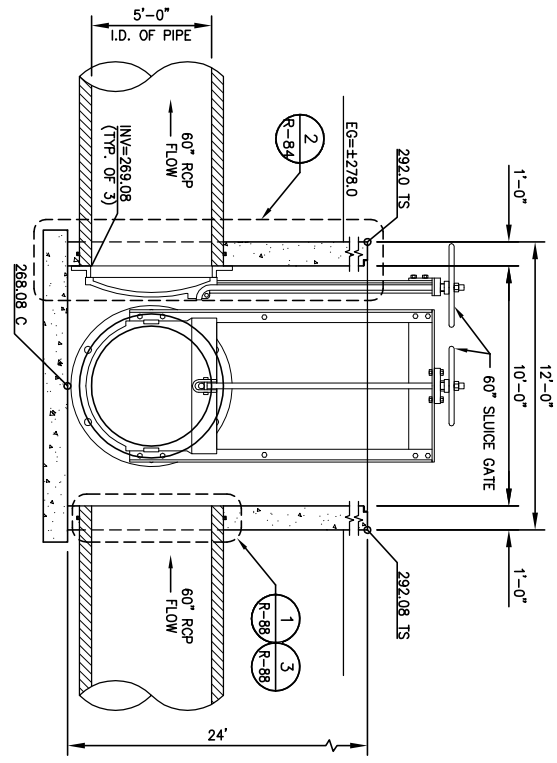


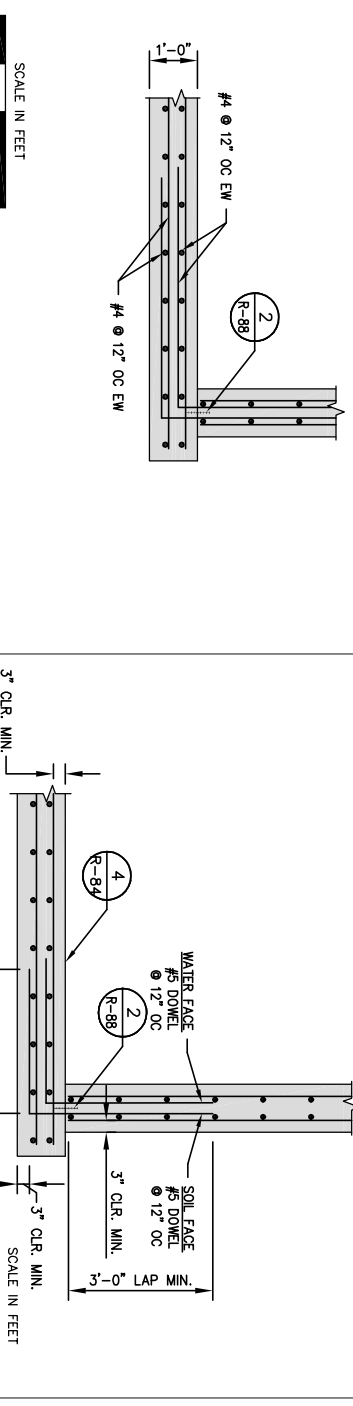


4 R-84 NOT FOR CONSTRUCTION STRUCTURE REINFORCING

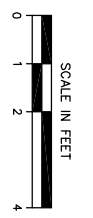





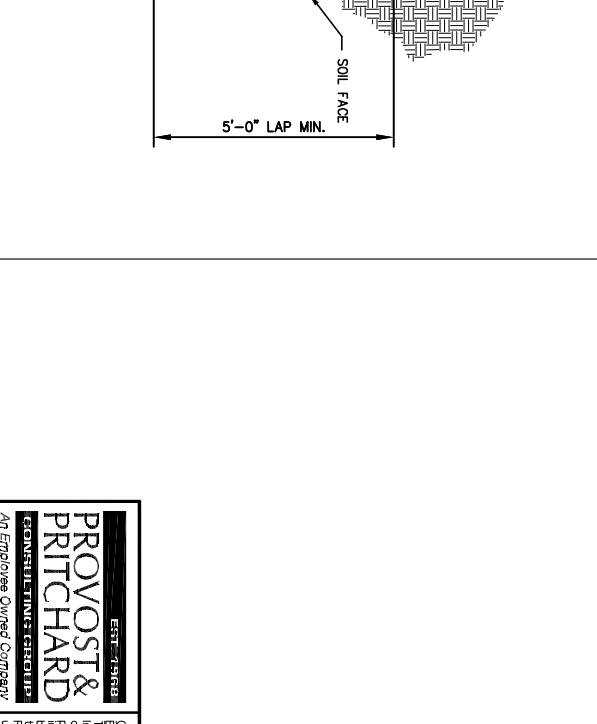


## 12" WALL REINFORCING




## WALL CORNER REINFORCING

COPYRIGHT 2010 by PROVOST & PRITCHARD ENGINEERING GROUP, INC. ALL RIGHTS RESERVED.
The firm of Provost & Pritchard Engineering Group, Inc. expressly reserves its common law copyright and other applicable property rights in these plans. These plans are not to be reproduced, changed, or copied in any form or manner whatsoever, nor are they to be assigned to a third party without first obtaining the written permission and consent of Provost & Pritchard Engineering Group, Inc. In the event of unauthorized reuse of these plans by a third party, the third party shall hold the firm of Provost & Pritchard Engineering Group, Inc. harmless, and shall bear the cost of Provost & Pritchard Engineering Group, Inc.'s legal fees associated with defending and enforcing these rights.

PROVOST & PRITCHARD
EST. 1968
CONSULTING GROUP
An Employee Owned Company
130 NORTH GARDEN STREET
VISALIA, CALIFORNIA 93291-6362
559/636-1166 FAX 559/636-1177
www.ppeng.com

PROJECT NAME: CITY OF VISALIA
WATER CONSERVATION PLANT UPGRADES

SHEET TITLE: RECYCLED WATER PIPELINE
CONCRETE STRUCTURES
STA 465+00 DISTRIBUTION BOX

PARSONS
100 WEST WALNUT STREET
PASADENA, CA 91124
OFFICE: 626.440.2000
FAX: 626.440.6337
WWW.PARSONS.COM

CITY OF VISALIA
PUBLIC WORKS DEPARTMENT
336 NORTH BEN MADDOX WAY
VISALIA CA. 93292

APPROVED BY: _____ R.C.E. C47262
ENGINEERING SERVICES MANAGER FOR CITY ENGINEER
DATE: _____

APPROVED BY: _____ R.C.E. C47262
ENGINEERING SERVICES MANAGER FOR CITY ENGINEER
DATE: _____

| REV. | DATE | BY | DESCRIPTION |
|---|---|---|---|

ISSUE DATE: 12-6-2010
CHECKED BY:
DESIGNED BY:
DRAWN BY: P&P
SCALE: AS NOTED
DWG. NO.: R-84
SHEET OF

V:\Clients\Parsons-1979\197909V1-Visalia WCP Pipelines\DWG\SHEET\197909V1-DT-STA 516 JUNCTION BOX last saved by MICHAELB on 1/4/11 plotted 11/22/2010 11:09:46 AM

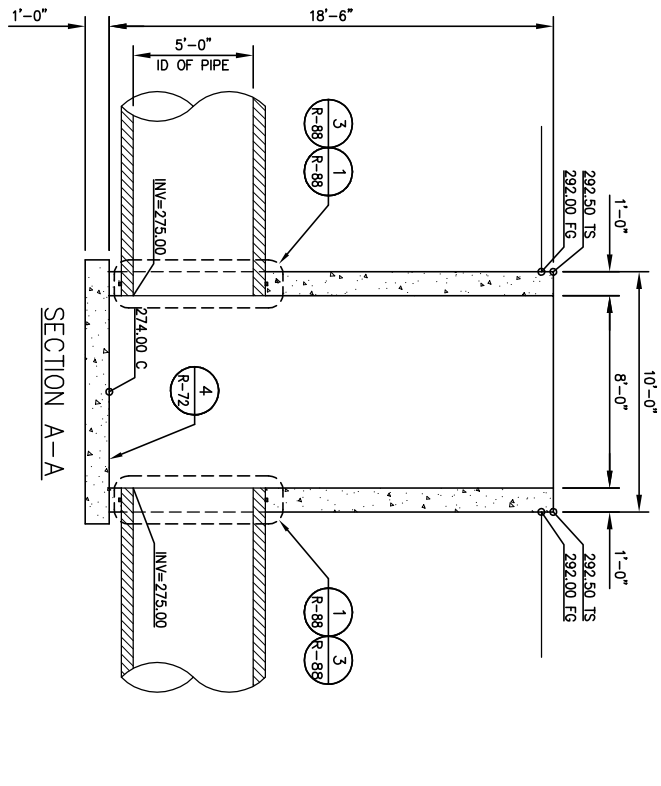


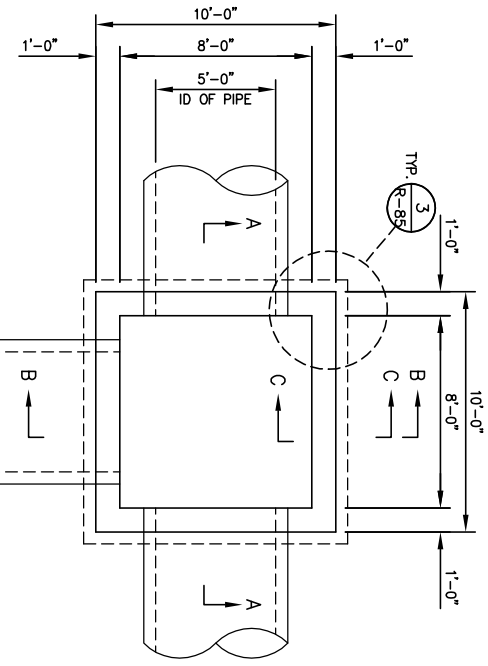





NOTES

1. REINFORCING NOT SHOWN FOR CLARITY.

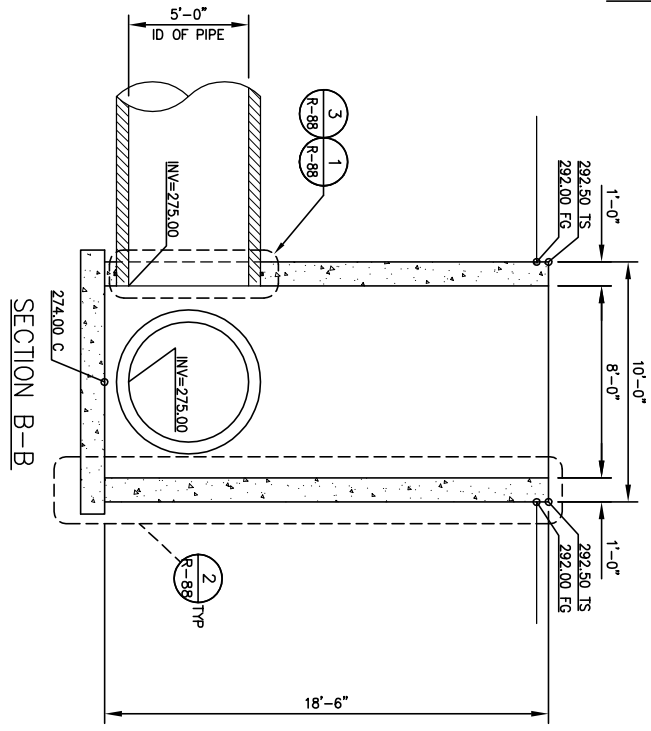


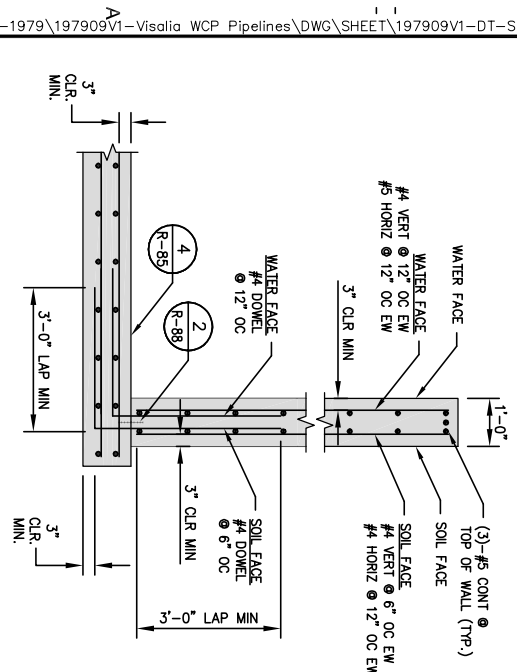


COPYRIGHT 2010 by PROVOST & PRITCHARD ENGINEERING GROUP, INC. ALL RIGHTS RESERVED
The firm of Provost & Pritchard Engineering Group, Inc. expressly reserves its common law copyright and other applicable property rights in these plans. These plans are not to be reproduced, changed, or copied in any form or manner whatsoever, nor are they to be assigned to a third party without first obtaining the written permission and consent of Provost & Pritchard Engineering Group, Inc. In the event of unauthorized reuse of these plans by a third party, the third party shall hold the firm of Provost & Pritchard Engineering Group, Inc. harmless, and shall bear the cost of Provost & Pritchard Engineering Group, Inc.'s legal fees associated with defending and enforcing these rights.

PROVOST & PRITCHARD
EST. 1946
CONSULTING GROUP
An Employee Owned Company
130 NORTH GARDEN STREET
VISALIA, CALIFORNIA 93291-6362
559/636-1166 FAX 559/636-1177
www.ppeng.com

PROJECT NAME:
# CITY OF VISALIA
## WATER CONSERVATION PLANT UPGRADES

SHEET TITLE:
## RECYCLED WATER PIPELINE
## CONCRETE STRUCTURES
## STA 516+00 DISTRIBUTION BOX

PARSONS
100 WEST WALNUT STREET
PASADENA, CA 91124
OFFICE: 626.440.2000
FAX: 626.440.6337
WWW.PARSONS.COM

CITY OF VISALIA
PUBLIC WORKS DEPARTMENT
336 NORTH BEN MADDOX WAY
VISALIA CA. 93292

APPROVED BY: _____ R.C.E. C47262
ENGINEERING SERVICES MANAGER FOR CITY ENGINEER
DATE: _____

APPROVED BY: _____ R.C.E. C47262
ENGINEERING SERVICES MANAGER FOR CITY ENGINEER
DATE: _____

| REV. | DATE | BY | DESCRIPTION |
|---|---|---|---|
| | | | |

ISSUE DATE: 12-6-2010
CHECKED BY:
DESIGNED BY:
DRAWN BY: P&P
SCALE: AS NOTED
DWG. NO: R-85
SHEET OF

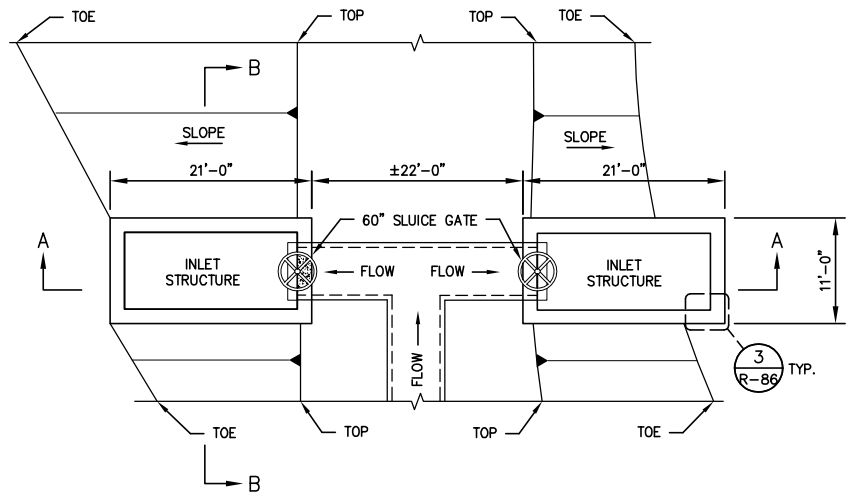


PLAN VIEW

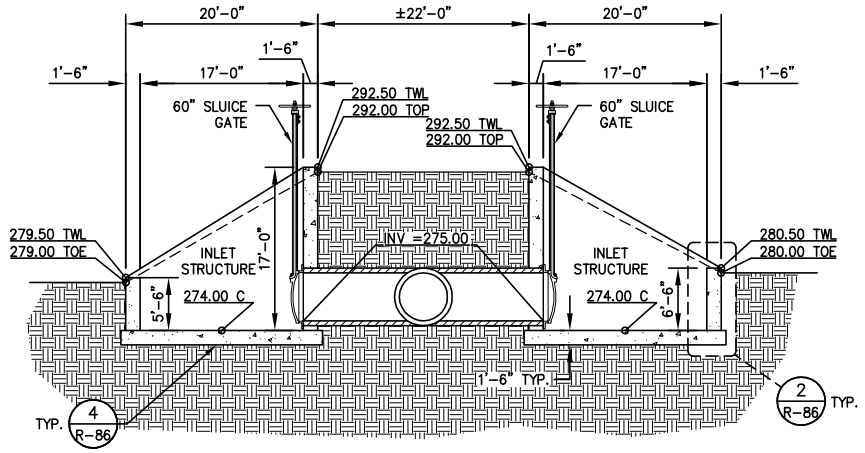


SECTION A

SCALE IN FEET
0 5 10 20

1
R-86

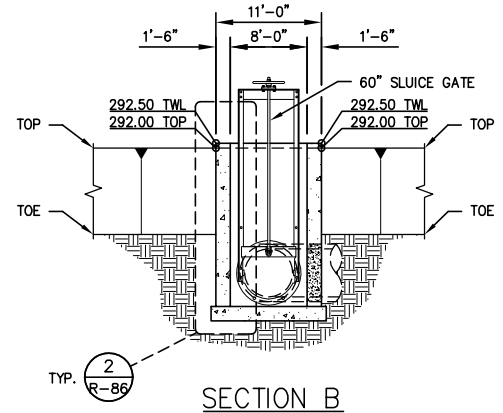


SECTION B

NOTES

1. REINFORCING NOT SHOWN FOR CLARITY.
2. 60" SLUICE GATE TO BE XXXXXXXXXXXXXX XXXXXXXXXXXXXXXXXXXXXXX. INSTALL PER MANUFACTURERS. RECOMMENDATIONS.

STA 516+00 INLET STRUCTURE DIMENSIONS

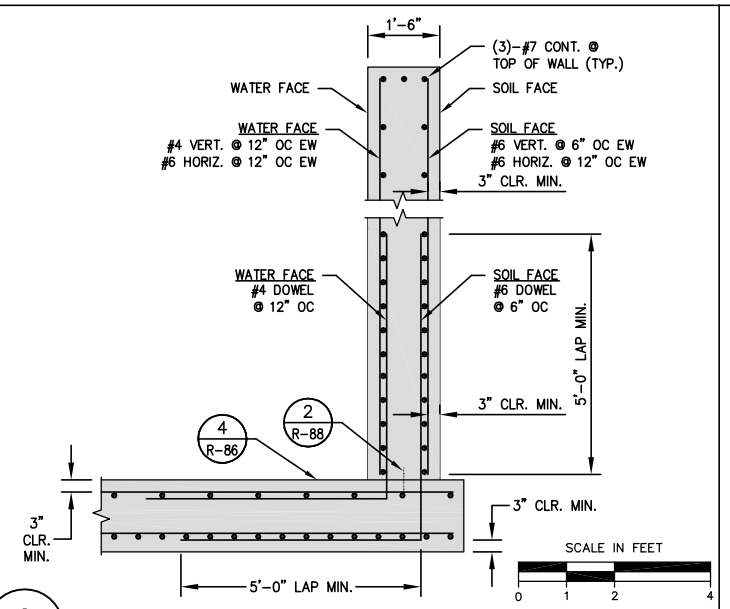


2
R-86

WALL REINFORCING

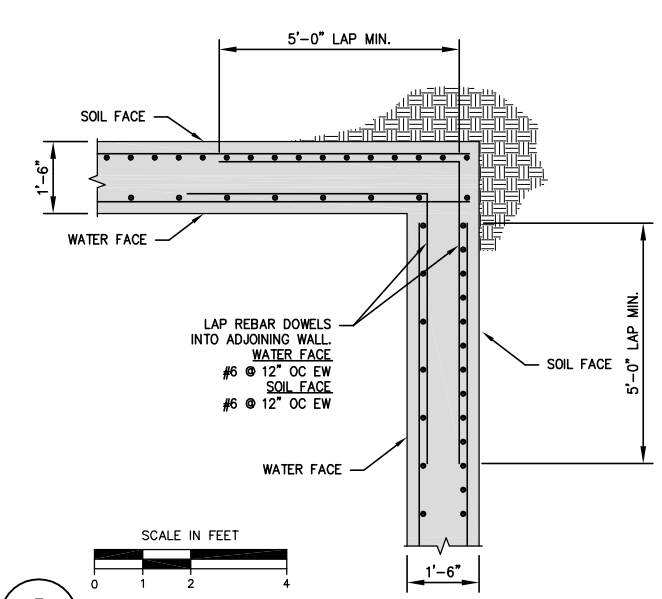


3
R-86

WALL CORNER REINFORCING

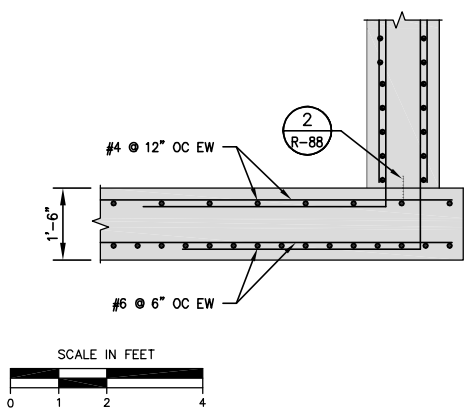


4
R-86

CONC. SLAB REINFORCING

NOT FOR CONSTRUCTION

APPROVED BY:
ENGINEERING SERVICES MANAGER FOR CITY ENGINEER
R.C.E. 047262
DATE:

APPROVED BY:
ENGINEERING SERVICES MANAGER FOR CITY ENGINEER
R.C.E. 047262
DATE:

| REV. | DATE | BY | DESCRIPTION |
|---|---|---|---|
| | | | |

CITY OF VISALIA
ENGINEERING DEPARTMENT
336 NORTH BEN MADDOX WAY
VISALIA CA. 93292

PARSONS
100 WEST WALNUT STREET
PASADENA, CA 91124
OFFICE: 626.440.2000
FAX: 626.440.4037
WWW.PARSONS.COM

PROJECT NAME: WATER CONSERVATION PLANT UPGRADES
SHEET TITLE: RECYCLED WATER PIPELINE CONCRETE STRUCTURES STA 516+00 INLET STRUCTURE

EST. 1968
PROVOST & PRITCHARD
CONSULTING GROUP
An Employee Owned Company
130 NORTH GARDEN STREET
VISALIA, CALIFORNIA 93291-6362
559/636-1166 FAX 559/636-1177
www.ppeng.com

COPYRIGHT 2010 by PROVOST & PRITCHARD ENGINEERING GROUP, INC. ALL RIGHTS RESERVED
The firm of Provost & Pritchard Engineering Group, Inc. expressly reserves its common law copyright and other applicable property rights in these plans. These plans are not to be reproduced, changed, or copied in any form or manner whatsoever, nor are they to be assigned to a third party without first obtaining the written permission and consent of Provost & Pritchard Engineering Group, Inc. In the event of unauthorized reuse of these plans by a third party, the third party shall hold the firm of Provost & Pritchard Engineering Group, Inc. harmless, and shall bear the cost of Provost & Pritchard Engineering Group, Inc.'s legal fees associated with defending and enforcing these rights.

| | |
|---|---|
| ISSUE DATE: | 12-6-2010 |
| CHECKED BY: | |
| DESIGNED BY: | |
| DRAWN BY: | P&P |
| SCALE: | AS NOTED |
| DWG. NO.: | R-86 |
| SHEET | OF |

V:\Clients\Parsons-1979\197909V1-Visalia WCP Pipelines\DWG\SHEET\197909V1-DT-STA 516+00 INLET last saved by MICHAELB on 12/22/10 plotted 8/9/2010 7:40:34 AM

V:\Clients\Parsons-1979\197909V1-Visalia WCP Pipelines\DWG\SHEET\197909V1-DT-STA 516+00 INLET.dwg Jan 05, 2011 - 4:35pm

V:\Clients\Parsons-1979\197909V1-Visalia WCP Pipelines\DWG\SHEET\197909V1-DT-STA 517 JUNCTION BOX.dwg Jan 05, 2011 - 4:35pm

NOT FOR CONSTRUCTION

12" WALL REINFORCING

WALL CORNER REINFORCING

CONC. SLAB REINFORCING

PLAN VIEW

STATION 517+00 JUNCTION BOX

SECTION A-A

NOTES

1. REINFORCING NOT SHOWN FOR CLARITY.
2. 60" SLUICE GATE TO BE XXXXXXXXXXXXXXX XXXXXXXXXXXXXXXXXXX. INSTALL PER MANUFACTURERS. RECOMMENDATIONS.

SECTION B-B

SECTION C-C

PROVOST & PRITCHARD
EST. 1968
CONSULTING GROUP
*An Employee Owned Company*
130 NORTH GARDEN STREET
VISALIA, CALIFORNIA 93291-6362
559/636-1166 FAX 559/636-1177
www.ppeng.com

COPYRIGHT 2010 by PROVOST & PRITCHARD ENGINEERING GROUP, INC. ALL RIGHTS RESERVED
The firm of Provost & Pritchard Engineering Group, Inc. expressly reserves its common law copyright and other applicable property rights in these plans. These plans are not to be reproduced, changed, or copied in any form or manner whatsoever, nor are they to be assigned to a third party without first obtaining the written permission and consent of Provost & Pritchard Engineering Group, Inc. In the event of unauthorized reuse of these plans by a third party, the third party shall hold the firm of Provost & Pritchard Engineering Group, Inc. harmless, and shall bear the cost of Provost & Pritchard Engineering Group, Inc.'s legal fees associated with defending and enforcing these rights.

| | |
|---|---|
| ISSUE DATE: | 12-6-2010 |
| CHECKED BY: | |
| DESIGNED BY: | |
| DRAWN BY: | P&P |
| SCALE: | AS NOTED |
| DWG. NO.: | R-87 |
| SHEET | OF |

PROJECT NAME:
CITY OF VISALIA
WATER CONSERVATION PLANT UPGRADES

SHEET TITLE:
RECYCLED WATER PIPELINE
CONCRETE STRUCTURES
STA 517+00 JUNCTION BOX

PARSONS
100 WEST WALNUT STREET
PASADENA, CA 91124
OFFICE: 626.440.2000
FAX: 626.440.6337
WWW.PARSONS.COM

VISALIA Founded 1852
CITY OF VISALIA
PUBLIC WORKS DEPARTMENT
336 NORTH BEN MADDOX WAY
VISALIA CA. 93292

APPROVED BY:
_______________ R.C.E. C47262
ENGINEERING SERVICES MANAGER FOR CITY ENGINEER
DATE: _______________

APPROVED BY:
_______________ R.C.E. C47262
ENGINEERING SERVICES MANAGER FOR CITY ENGINEER
DATE: _______________

| REV. | DATE | BY | DESCRIPTION |
|---|---|---|---|
| △ | | | |
| △ | | | |
| △ | | | |
| △ | | | |
| △ | | | |
| △ | | | |
| △ | | | |

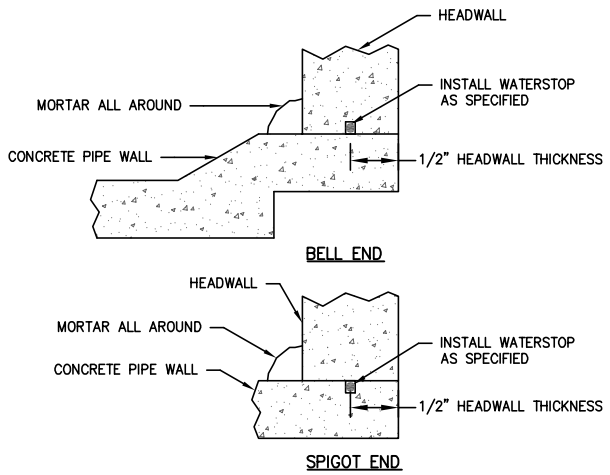


NOTES:
1. ALL CONNECTIONS TO BE WATERTIGHT.
2. IF GATE IS TO BE MOUNTED AT THE CONNECTION, USE SPIGOT END OF PIPE OR CUT OFF PIPE BELL.

1 / R-88 CONCRETE PIPE HEADWALL JOINT

SCALE = NTS

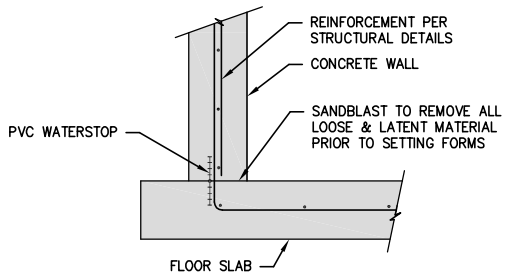


2 / R-88 CONSTRUCTION JOINT

SCALE = NTS

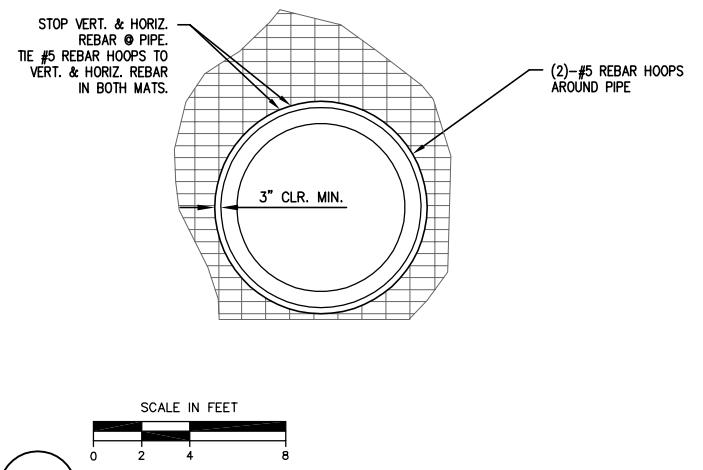


3 / R-88 60" RGRCP STRUCTURE REINFORCING

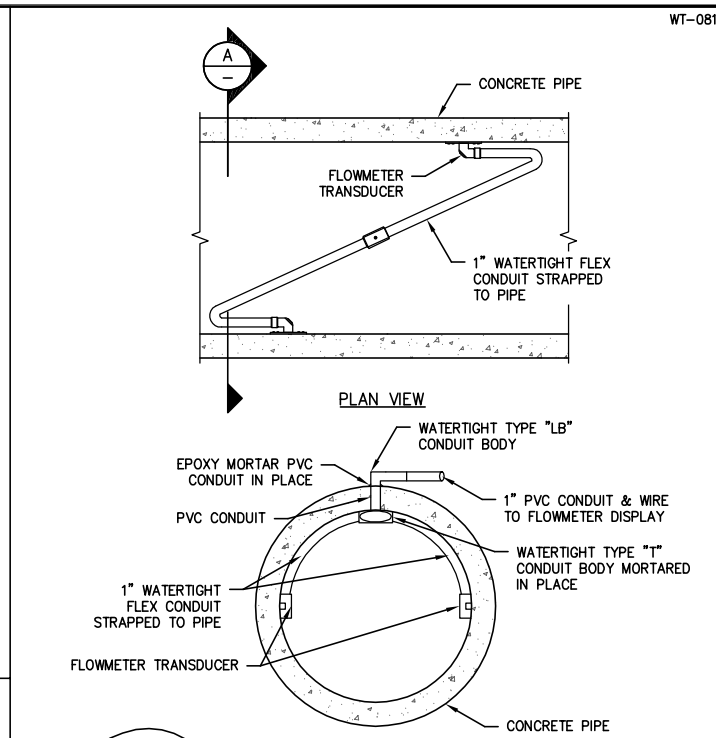


NOTE
ALL CONDUIT & BOXES TO BE RATED FOR SUBMERGED SEVICE

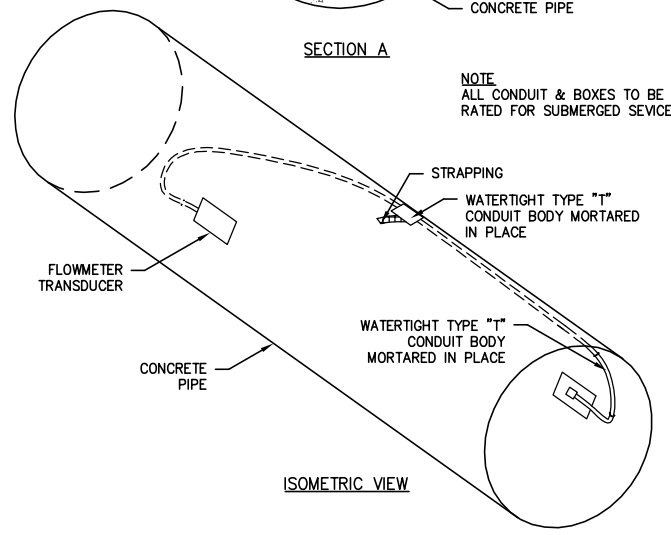


6 / R-88 SUBMERSIBLE FLOWMETER TRANSDUCER

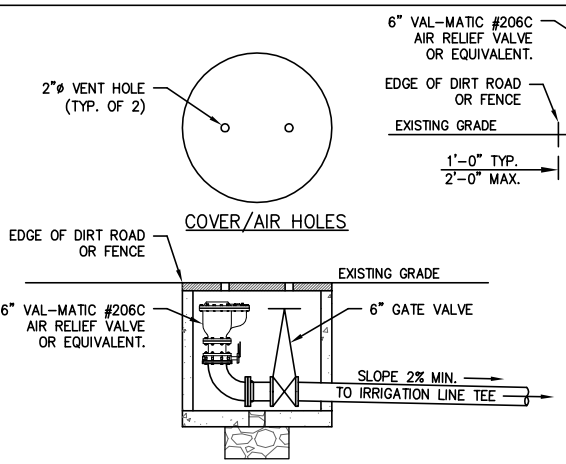


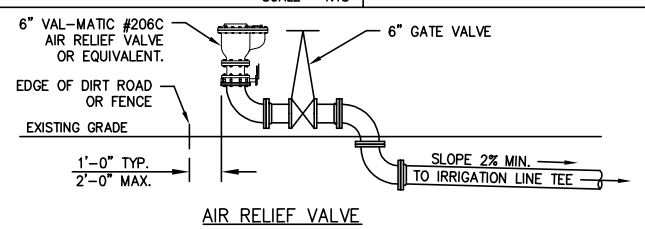


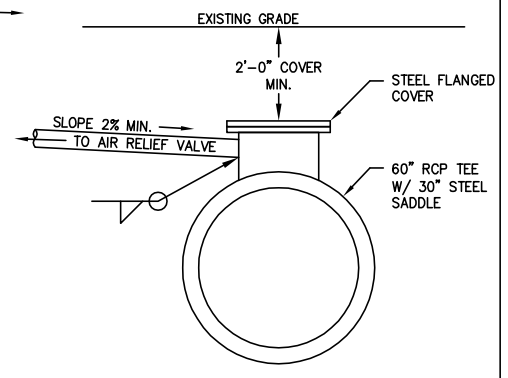


4 / R-88 PRESSURE MANHOLE WITH AIR RELIEF

SCALE IN FEET
0 1.5 3 6

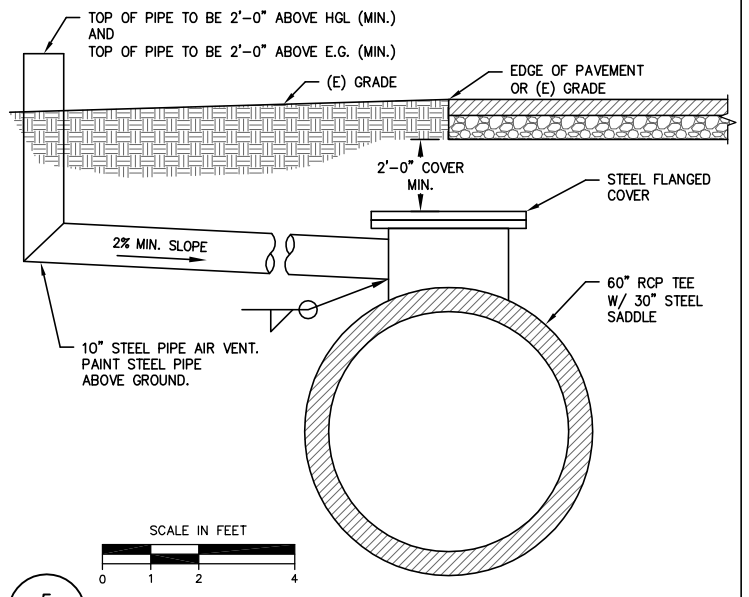


SCALE IN FEET
0 1 2 4

5 / R-88 SLOPED PIPE AIR VENT

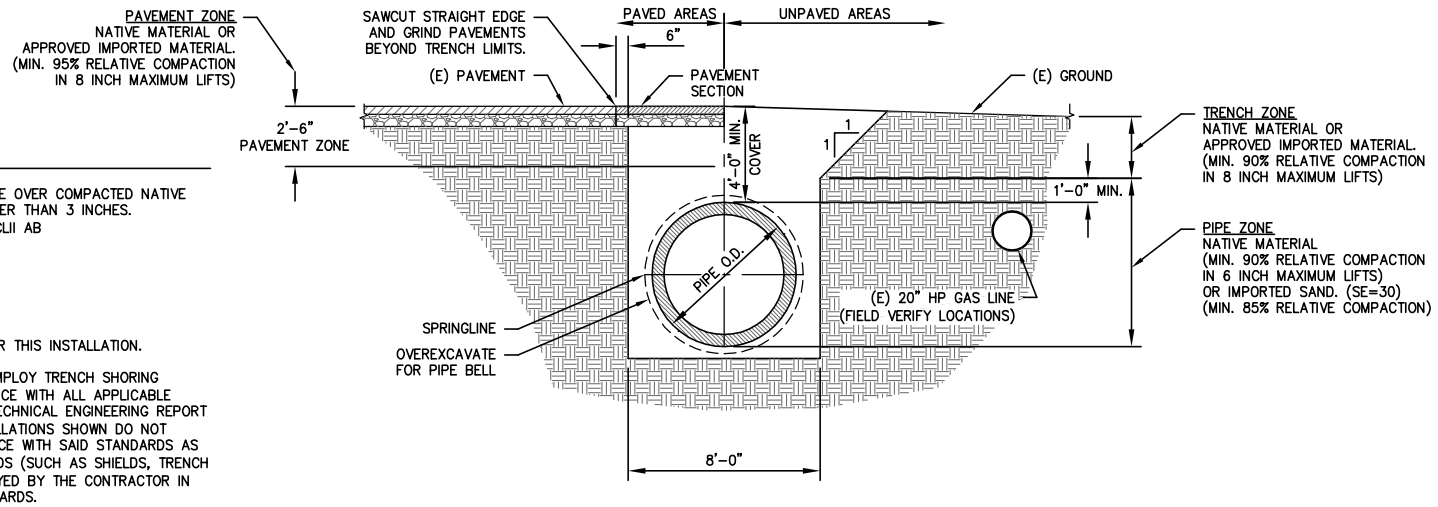


NOTES

1. TRENCH RESURFACING SHALL BE OVER COMPACTED NATIVE SOIL. NO LIFT SHALL BE GREATER THAN 3 INCHES. RD 68 – X" AC OVER X" CLII AB
2. TRENCH WIDTH VARIES
   XX"ø PIPE – X'–X" MAX.
   XX"ø PIPE – X'–X" MAX.
   XX"ø PIPE – X'–X" MAX.
3. SPECIAL BEDDING REQUIRED FOR THIS INSTALLATION.
4. PIPE INSTALLATIONS ARE TO EMPLOY TRENCH SHORING AND/OR SLOPING IN ACCORDANCE WITH ALL APPLICABLE SAFETY STANDARDS AND GEOTECHNICAL ENGINEERING REPORT BY [COMPANY]. TYPICAL INSTALLATIONS SHOWN DO NOT NECESSARILY DEPICT COMPLIANCE WITH SAID STANDARDS AS SPECIAL CONSTRUCTION METHODS (SUCH AS SHIELDS, TRENCH BOXES, ETC.) MIGHT BE EMPLOYED BY THE CONTRACTOR IN ACCORDANCE WITH SAID STANDARDS.

SCALE IN FEET
0 2 4 8

7 / R-88 TYPICAL TRENCH DETAIL

NOTES

1. THE CONTRACTOR SHALL EITHER SLOPE THE EXCAVATION TO CREATE A STABLE SLOPE, SHORE THE EXCAVATION, OR A COMBINATION OF BOTH. ALL TEMPORARY EXCAVATIONS SHOULD BE CONSTRUCTED IN ACCORDANCE WITH CAL OSHA REQUIREMENTS. TEMPORARY UNSHORED EXCAVATIONS SHOULD NOT BE STEEPER THAN X:XH:X:XV OR AS NECESSARY TO MAINTAIN STABLE CONDITIONS. CONTRACTOR SHALL PROVIDE AND MAINTAIN SHORING TO ALLOW SAFE ENTRY INTO THE TRENCHES THROUGHOUT CONSTRUCTION FOR INSPECTION AND IN-PLACE DENSITY TESTING OF THE BACKFILL.
2. USE OF OPEN-GRADED ROCK SUCH AS CRUSHED ROCK IS NOT ALLOWED FOR ANY PORTION OF THE TRENCH BACKFILL UNLESS NOTED OTHERWISE.
3. THE CONTRACTOR SHALL USE EQUIPMENT AS NECESSARY TO ACHIEVE A SMOOTH, UNDISTURBED NATIVE SOIL SURFACE AT THE BOTTOM OF THE TRENCH WITH NO LOOSE MATERIAL. ALL TRENCH SUBGRADE SOILS DISTURBED DURING EXCAVATION SUCH AS ACCIDENTAL OVER EXCAVATION OF THE TRENCH BOTTOM OR BY EXCAVATION EQUIPMENT WITH CUTTING TEETH, SHALL BE COMPACTED TO MINIMUM OF 90% RELATIVE COMPACTION PRIOR TO PLACEMENT OF BEDDING MATERIAL.
4. HAUNCHING SHALL BE PLACED IN MAXIMUM 6 INCH LAYERS, COMPACTED AND WORKED IN UNIFORMLY AROUND THE PIPE HAND METHODS.

NOT FOR CONSTRUCTION

WT-0811

| REV. | DATE | BY | DESCRIPTION |
|---|---|---|---|

APPROVED BY: ENGINEERING SERVICES MANAGER FOR CITY ENGINEER R.C.E. 047282 DATE:

APPROVED BY: ENGINEERING SERVICES MANAGER FOR CITY ENGINEER R.C.E. 047282 DATE:

CITY OF VISALIA
ENGINEERING DEPARTMENT
336 NORTH BEN MADDOX WAY
VISALIA CA. 93292

PARSONS
100 WEST WALNUT STREET
PASADENA, CA 91124
OFFICE: 626.440.2000
FAX: 626.440.2630
WWW.PARSONS.COM

PROJECT NAME: CITY OF VISALIA
WATER CONSERVATION PLANT UPGRADES

SHEET TITLE: RECYCLED WATER PIPELINE
DETAILS
DETAILS 1

EST. 1968
PROVOST & PRITCHARD
CONSULTING GROUP
An Employee Owned Company
130 NORTH GARDEN STREET
VISALIA, CALIFORNIA 93291-6362
559/636-1166 FAX 559/636-1177
www.ppeng.com

COPYRIGHT 2010 by PROVOST & PRITCHARD ENGINEERING GROUP, INC. ALL RIGHTS RESERVED
The firm of Provost & Pritchard Engineering Group, Inc. expressly reserves its common law copyright and other applicable property rights in these plans. These plans are not to be reproduced, changed, or copied in any form or manner whatsoever, nor are they to be assigned to a third party without first obtaining the written permission and consent of Provost & Pritchard Engineering Group, Inc. In the event of unauthorized reuse of these plans by a third party, the third party shall hold the firm of Provost & Pritchard Engineering Group, Inc. harmless, and shall bear the cost of Provost & Pritchard Engineering Group, Inc.'s legal fees associated with defending and enforcing these rights.

| | |
|---|---|
| ISSUE DATE: | 12-6-2010 |
| CHECKED BY: | |
| DESIGNED BY: | |
| DRAWN BY: | P&P |
| SCALE: | AS NOTED |
| DWG. NO.: | R-88 |
| SHEET | OF |

V:\Clients\Parsons-1979\197909V1-Visalia WCP Pipelines\DWG\SHEET\197909V1-DT-DETAILS 1.dwg Jan 05, 2011 - 4:36pm

V:\Clients\Parsons-1979\197909V1-Visalia WCP Pipelines\DWG\SHEET\197909V1-DT-DETAILS 1 last saved by MICHAELB on 1/5/11 plotted 4/5/2010 10:11:25 AM

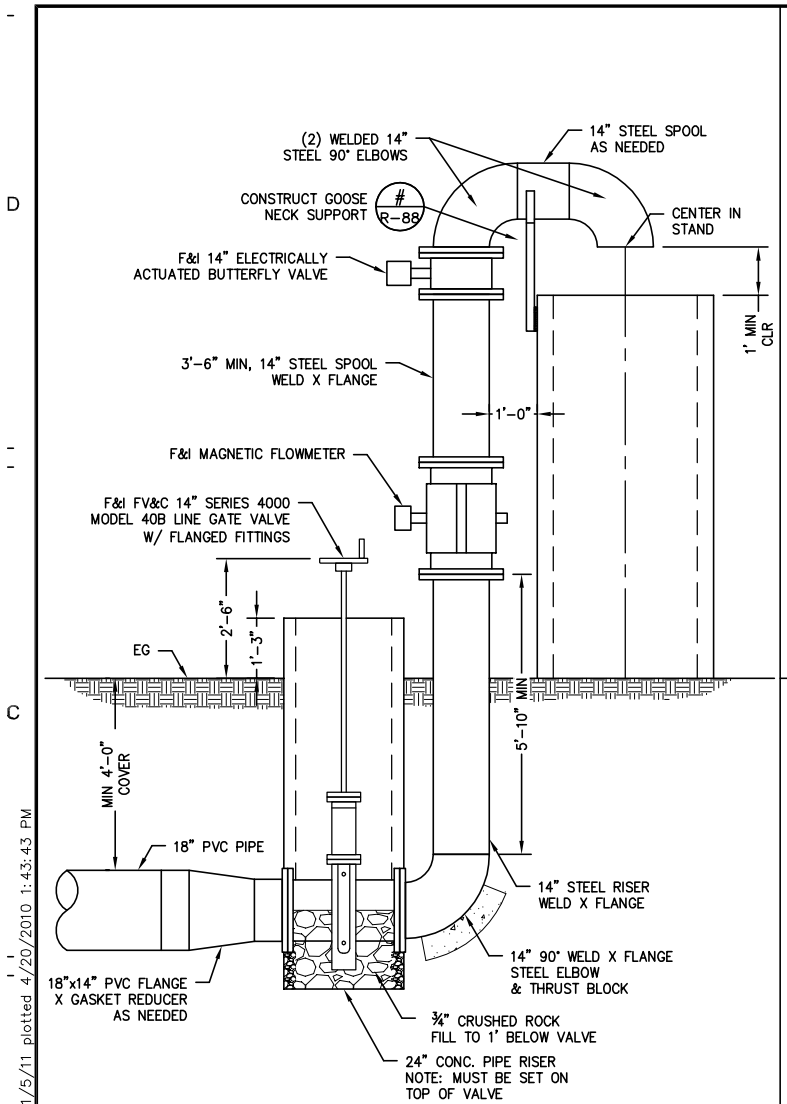


| TURNOUT | PIPE D |
|---|---|
| AG1A | 18" |
| AG1B | 18" |
| AG2 | 18" |
| | |

1 R-89

AGRICULTURAL USER OR VERTICAL TURNOUT

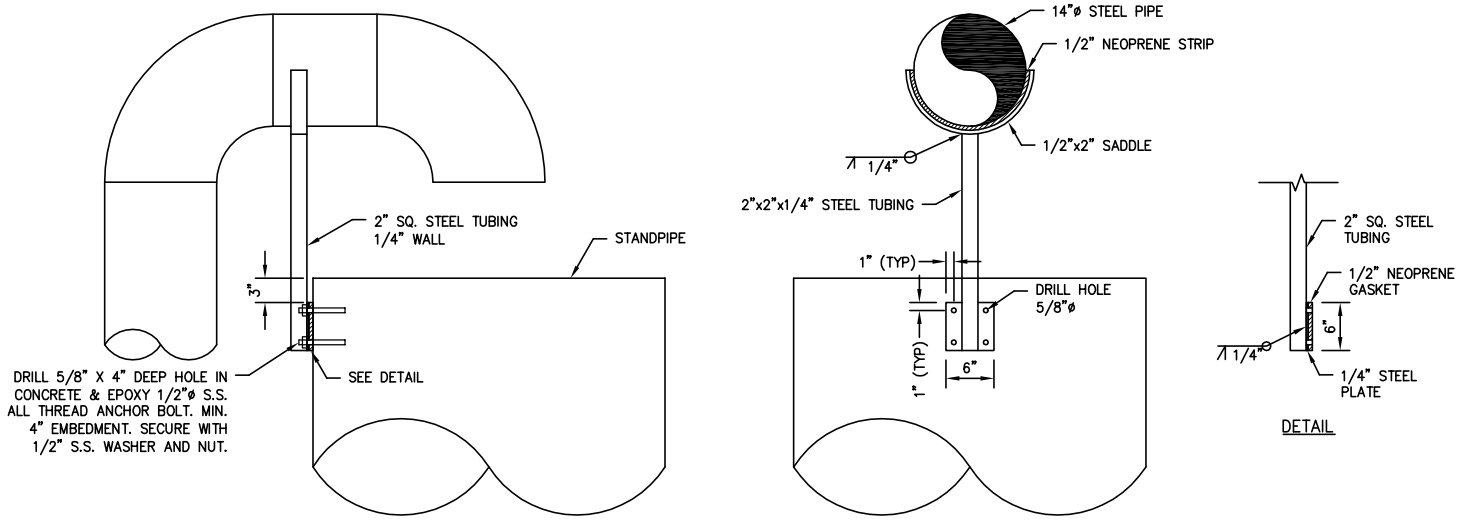


2 R-89

GOOSE NECK SUPPORT

SCALE = NTS

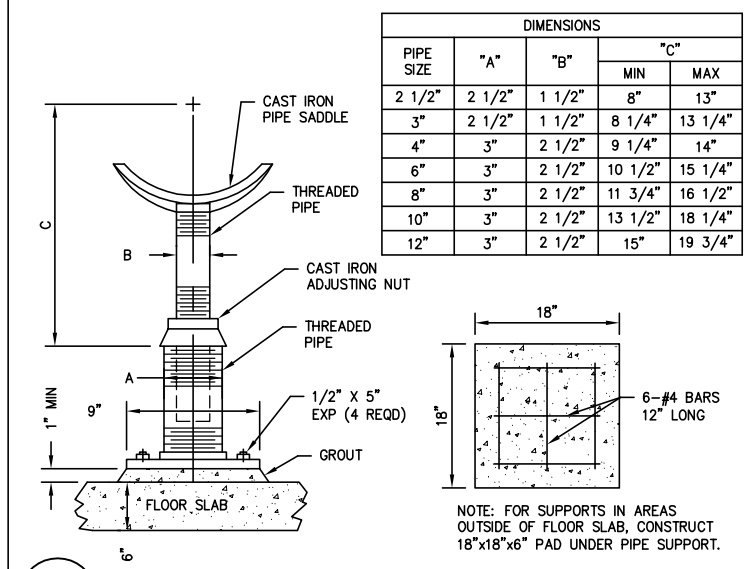


| PIPE SIZE | "A" | "B" | "C" MIN | "C" MAX |
|---|---|---|---|---|
| 2 1/2" | 2 1/2" | 1 1/2" | 8" | 13" |
| 3" | 2 1/2" | 1 1/2" | 8 1/4" | 13 1/4" |
| 4" | 3" | 2 1/2" | 9 1/4" | 14" |
| 6" | 3" | 2 1/2" | 10 1/2" | 15 1/4" |
| 8" | 3" | 2 1/2" | 11 3/4" | 16 1/2" |
| 10" | 3" | 2 1/2" | 13 1/2" | 18 1/4" |
| 12" | 3" | 2 1/2" | 15" | 19 3/4" |

4 R-89

PIPE SUPPORT

SCALE = NTS

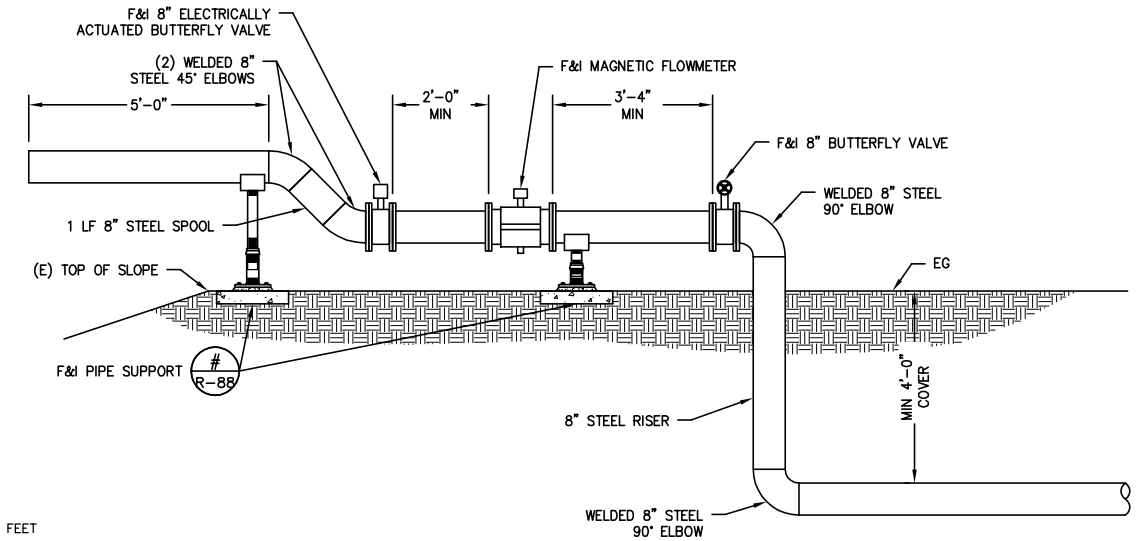


3 R-89

POND TURNOUT

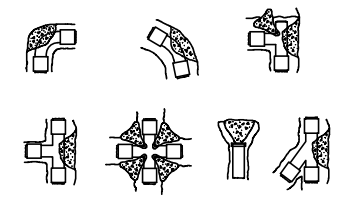

ALL FITTINGS TO BE WRAPPED IN 4 MIL VISQUEEN

TYPICAL THRUST BLOCKS

AREA OF CONCRETE BEARING AGAINST UNDISTURBED SOIL SQUARE FEET

| PIPE SIZE | DEAD END OR TEE | 90° BEND | 45° BEND | 22.5° BEND |
|---|---|---|---|---|
| 8 | 1.0 | 1.0 | 1.0 | 1.0 |
| 12 | 1.0 | 1.2 | 1.0 | 1.0 |
| 16 | 1.4 | 2.1 | 1.1 | 1.0 |
| 24 | 3.2 | 4.6 | 2.5 | 1.3 |
| 36 | 7.3 | 10.4 | 5.6 | 2.9 |

BASED ON 3000 PSF SOIL BEARING CAPACITY AND 50 FT WORKING PRESSURE – SPECIAL DESIGN REQUIRED FOR SOIL LESS THAN 2000 PSF CONCRETE TO HAVE ULTIMATE STRENGTH OF 3000 PSI @ 28 DAYS.

5 R-89

THRUST BLOCKS

SCALE = NTS

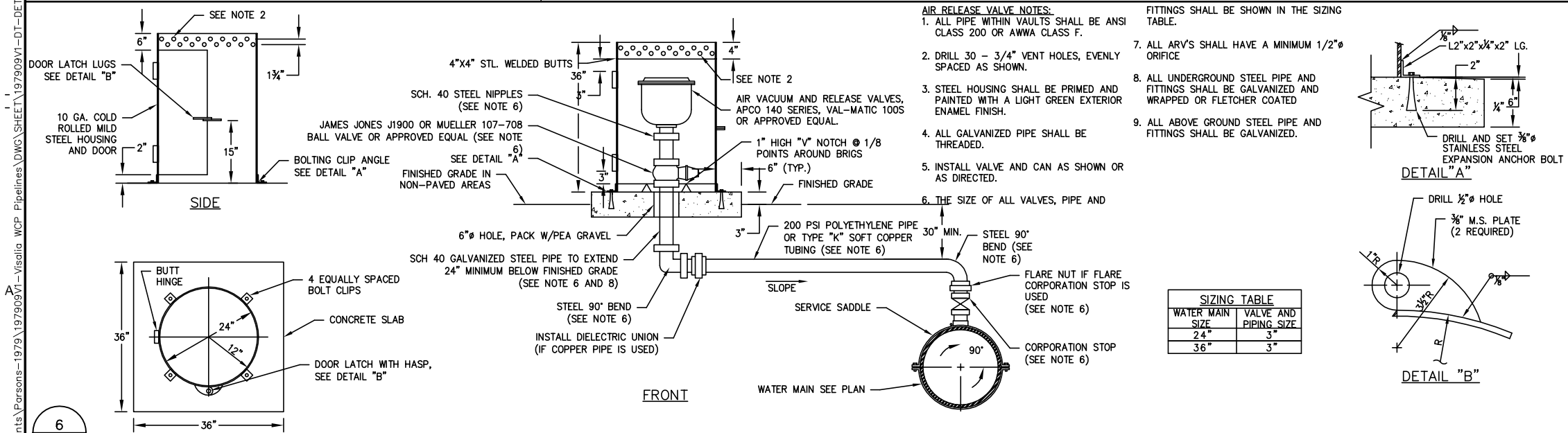


AIR RELEASE VALVE NOTES:

1. ALL PIPE WITHIN VAULTS SHALL BE ANSI CLASS 200 OR AWWA CLASS F.
2. DRILL 30 – 3/4" VENT HOLES, EVENLY SPACED AS SHOWN.
3. STEEL HOUSING SHALL BE PRIMED AND PAINTED WITH A LIGHT GREEN EXTERIOR ENAMEL FINISH.
4. ALL GALVANIZED PIPE SHALL BE THREADED.
5. INSTALL VALVE AND CAN AS SHOWN OR AS DIRECTED.
6. THE SIZE OF ALL VALVES, PIPE AND FITTINGS SHALL BE SHOWN IN THE SIZING TABLE.
7. ALL ARV'S SHALL HAVE A MINIMUM 1/2"ø ORIFICE
8. ALL UNDERGROUND STEEL PIPE AND FITTINGS SHALL BE GALVANIZED AND WRAPPED OR FLETCHER COATED
9. ALL ABOVE GROUND STEEL PIPE AND FITTINGS SHALL BE GALVANIZED.

| SIZING TABLE | |
|---|---|
| WATER MAIN SIZE | VALVE AND PIPING SIZE |
| 24" | 3" |
| 36" | 3" |




6 R-89

AIR RELEASE–VACUUM VALVE ASSEMBLY

SCALE = NTS

NOT FOR CONSTRUCTION

APPROVED BY: R.C.E. 047282
ENGINEERING SERVICES MANAGER FOR CITY ENGINEER
DATE:

APPROVED BY: R.C.E. 047282
ENGINEERING SERVICES MANAGER FOR CITY ENGINEER
DATE:

| REV. | DATE | BY | DESCRIPTION |
|---|---|---|---|

CITY OF VISALIA
ENGINEERING DEPARTMENT
336 NORTH BEN MADDOX WAY
VISALIA CA. 93292

PARSONS
100 WEST WALNUT STREET
PASADENA, CA 91124
OFFICE: 626.440.2000
FAX: 626.440.2630
WWW.PARSONS.COM

PROJECT NAME: CITY OF VISALIA
WATER CONSERVATION PLANT UPGRADES

SHEET TITLE: RECYCLED WATER PIPELINE
DETAILS
DETAILS 2

EST. 1968
PROVOST& PRITCHARD
CONSULTING GROUP
An Employee Owned Company
130 NORTH GARDEN STREET
VISALIA, CALIFORNIA 93291-6362
559/636-1166 FAX 559/636-1177
www.ppeng.com

COPYRIGHT 2010 by PROVOST & PRITCHARD ENGINEERING GROUP, INC. ALL RIGHTS RESERVED
The firm of Provost & Pritchard Engineering Group, Inc. expressly reserves its common law copyright and other applicable property rights in these plans. These plans are not to be reproduced, changed, or copied in any form or manner whatsoever, nor are they to be assigned to a third party without first obtaining the written permission and consent of Provost & Pritchard Engineering Group, Inc. In the event of unauthorized reuse of these plans by a third party, the third party shall hold the firm of Provost & Pritchard Engineering Group, Inc. harmless, and shall bear the cost of Provost & Pritchard Engineering Group, Inc.'s legal fees associated with defending and enforcing these rights.

| | |
|---|---|
| ISSUE DATE: | 12-6-2010 |
| CHECKED BY: | |
| DESIGNED BY: | |
| DRAWN BY: | P&P |
| SCALE: | AS NOTED |
| DWG. NO.: | R-89 |
| SHEET | OF |

V:\Clients\Parsons-1979\197909V1-Visalia WCP Pipelines\DWG\SHEET\197909V1-DT-DETAILS 2.dwg Jan 05, 2011 - 4:37pm
on 1/5/11 plotted 4/20/2010 1:43:43 PM
last saved by KEITH on 1/5/11

1 R-90 FIBRE OPTIC LINE TO FIRE STATION

NOT FOR CONSTRUCTION

| REV. | DATE | BY | DESCRIPTION |
|---|---|---|---|

APPROVED BY: _____ R.C.E. 047262
ENGINEERING SERVICES MANAGER FOR CITY ENGINEER
DATE: _____

APPROVED BY: _____ R.C.E. 047262
ENGINEERING SERVICES MANAGER FOR CITY ENGINEER
DATE: _____

CITY OF VISALIA
ENGINEERING DEPARTMENT
336 NORTH BEN MADDOX WAY
VISALIA CA. 93292

PARSONS
100 WEST WALNUT STREET
PASADENA, CA 91124
OFFICE: 626.440.2000
FAX: 626.440.2630
WWW.PARSONS.COM

PROJECT NAME: CITY OF VISALIA
WATER CONSERVATION PLANT UPGRADES

SHEET TITLE: RECYCLED WATER PIPELINE
DETAILS
DETAILS 3

EST. 1968
PROVOST& PRITCHARD
CONSULTING GROUP
An Employee Owned Company
130 NORTH GARDEN STREET
VISALIA, CALIFORNIA 93291-6362
559/636-1166 FAX 559/636-1177
www.ppeng.com

COPYRIGHT 2010 by PROVOST & PRITCHARD ENGINEERING GROUP, INC. ALL RIGHTS RESERVED
The firm of Provost & Pritchard Engineering Group, Inc. expressly reserves its common law copyright and other applicable property rights in these plans. These plans are not to be reproduced, changed, or copied in any form or manner whatsoever, nor are they to be assigned to a third party without first obtaining the written permission and consent of Provost & Pritchard Engineering Group, Inc. In the event of unauthorized reuse of these plans by a third party, the third party shall hold the firm of Provost & Pritchard Engineering Group, Inc. harmless, and shall bear the cost of Provost & Pritchard Engineering Group, Inc.'s legal fees associated with defending and enforcing these rights.

| | |
|---|---|
| ISSUE DATE: | 12-6-2010 |
| CHECKED BY: | |
| DESIGNED BY: | |
| DRAWN BY: | P&P |
| SCALE: | AS NOTED |
| DWG. NO.: | R-90 |
| SHEET | OF |

V:\Clients\Parsons-1979\197909V1-Visalia WCP Pipelines\DWG\SHEET\197909V1-DT-DETAILS 3.dwg Jan 05, 2011 - 4:37pm
V:\Clients\Parsons-1979\197909V1-Visalia WCP Pipelines\DWG\SHEET\197909V1-DT-DETAILS 3 last saved by MIKEPR on 12/21/10 plotted 4/20/2010 1:59:54 PM

V:\Clients\Parsons-1979\197909V1-Visalia WCP Pipelines\DWG\SHEET\197909V1-DT-DETAILS 4 last saved by MIKEPR on 12/21/10 plotted 5/3/2010 8:52:08 AM

NOT FOR CONSTRUCTION

V:\Clients\Parsons-1979\197909V1-Visalia WCP Pipelines\DWG\SHEET\197909V1-DT-DETAILS 4.dwg Jan 05, 2011 - 4:37pm

PROVOST & PRITCHARD
EST. 1955
CONSULTING GROUP
An Employee Owned Company
130 NORTH GARDEN STREET
VISALIA, CALIFORNIA 93291-6362
559/636-1166 FAX 559/636-1177
www.ppeng.com

COPYRIGHT 2010 by PROVOST & PRITCHARD ENGINEERING GROUP, INC. ALL RIGHTS RESERVED
The firm of Provost & Pritchard Engineering Group, Inc. expressly reserves its common law copyright and other applicable property rights in these plans. These plans are not to be reproduced, changed, or copied in any form or manner whatsoever, nor are they to be assigned to a third party without first obtaining the written permission and consent of Provost & Pritchard Engineering Group, Inc. In the event of unauthorized reuse of these plans by a third party, the third party shall hold the firm of Provost & Pritchard Engineering Group, Inc. harmless, and shall bear the cost of Provost & Pritchard Engineering Group, Inc.'s legal fees associated with defending and enforcing these rights.

PROJECT NAME:
# CITY OF VISALIA
## WATER CONSERVATION PLANT UPGRADES
SHEET TITLE:
## RECYCLED WATER PIPELINE DETAILS
## DETAILS 4

PARSONS
100 WEST WALNUT STREET
PASADENA, CA 91124
OFFICE: 626.440.2000
FAX: 626.440.6337
WWW.PARSONS.COM

CITY OF VISALIA
PUBLIC WORKS DEPARTMENT
336 NORTH BEN MADDOX WAY
VISALIA CA. 93292

APPROVED BY: _____ R.C.E. C47262
ENGINEERING SERVICES MANAGER FOR CITY ENGINEER
DATE: _____

APPROVED BY: _____ R.C.E. C47262
ENGINEERING SERVICES MANAGER FOR CITY ENGINEER
DATE: _____

| REV. | DATE | BY | DESCRIPTION |
|---|---|---|---|

ISSUE DATE: 12-6-2010
CHECKED BY:
DESIGNED BY:
DRAWN BY: P&P
SCALE: AS NOTED
DWG. NO.: R-91
SHEET OF

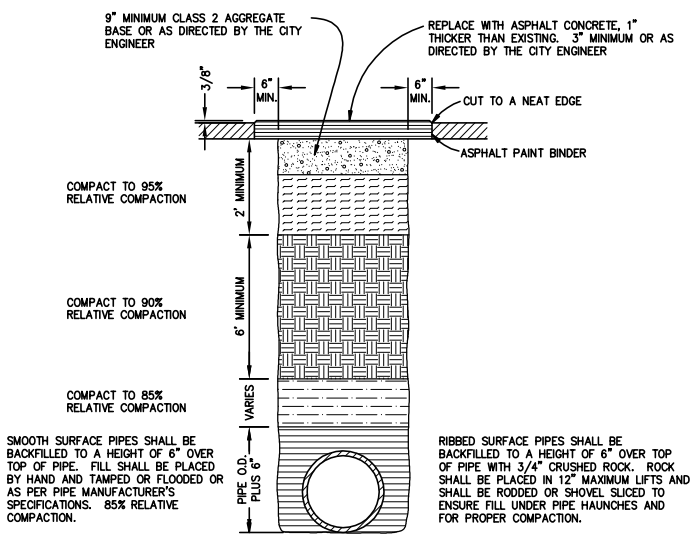


SMOOTH SURFACE PIPES SHALL BE BACKFILLED TO A HEIGHT OF 6" OVER TOP OF PIPE. FILL SHALL BE PLACED BY HAND AND TAMPED OR FLOODED OR AS PER PIPE MANUFACTURER'S SPECIFICATIONS. 85% RELATIVE COMPACTION.

RIBBED SURFACE PIPES SHALL BE BACKFILLED TO A HEIGHT OF 6" OVER TOP OF PIPE WITH 3/4" CRUSHED ROCK. ROCK SHALL BE PLACED IN 12" MAXIMUM LIFTS AND SHALL BE RODDED OR SHOVEL SLICED TO ENSURE FILL UNDER PIPE HAUNCHES AND FOR PROPER COMPACTION.

NOTES:

1. ALL WORKMANSHIP AND MATERIALS SHALL CONFORM TO THE REQUIREMENTS SET FORTH IN THE CURRENT EDITION OF THE STATE OF CALIFORNIA DEPARTMENT OF TRANSPORTATION "STANDARD SPECIFICATIONS".
2. ALL PROVISIONS AND REQUIREMENTS OF THE CITY OF VISALIA MUNICIPAL CODE SHALL BE FOLLOWED.
3. STREET CUTS SHALL BE MADE PARALLEL OR AT RIGHT ANGLES TO THE CENTERLINE OF THE STREET.
4. ENCROACHMENT PERMITS OBTAINED FROM THE CITY OF VISALIA MUST BE IN POSSESSION OF CREW DOING WORK.
5. IN EMERGENCY SITUATIONS, A STREET MAY BE CUT WITHOUT AN ENCROACHMENT PERMIT. A PERMIT SHALL BE OBTAINED ON THE FIRST WORKING DAY FOLLOWING THE EMERGENCY STREET CUT. THE NATURE OF THE EMERGENCY SHALL BE DETAILED ON THE PERMIT.
6. TRANSVERSE TRENCHES SHALL BE BACKFILLED WITH CLASS 2 AGGREGATE BASE, SAND, DECOMPOSED GRANITE OR ROCK DUST.
7. EXISTING ARTERIAL STREETS SHALL BE BACKFILLED WITH CLASS 2 AGGREGATE BASE ONLY.
8. TRENCHES IN OR ADJACENT TO FUTURE ARTERIAL OR COLLECTOR STATUS STREETS SHALL BE COMPACTED BY FLOOD METHOD PER PIPE MANUFACTURER'S SPECIFICATIONS.

| Approved by Visalia City Council 7/12/04 DATE | City of Visalia Improvement Standards | |
|---|---|---|
| Trench Backfill & Paving | REVISIONS 5/17/04 | E-1 |

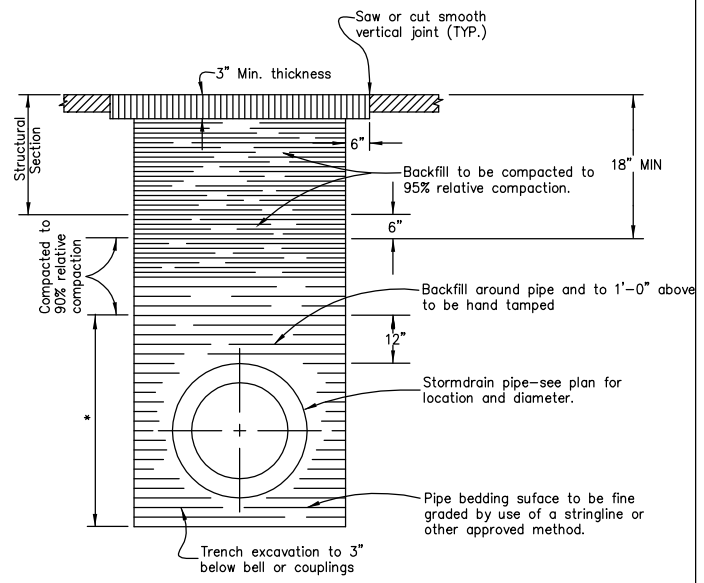


*Backfill around pipe and to 1'-0" above top of pipe may be material from the excavation only if it has a sand equivalent of 30 minimum. For plastic pipe backfill around pipe and to 1'-0" above top of pipe may be material from the excavation only if it is coarse sand or decomposed granite free of rocks larger than 1 1/2" diameter.

| No. | Revised | By |
|---|---|---|
| | | |

PUBLIC ROAD STANDARDS
BACKFILL AND STREET EXCAVATION
TULARE COUNTY ORDINANCE CODE SECTION 7080

DATE _____
PLATE NO. A-25

| REV. | DATE | BY | DESCRIPTION |
|---|---|---|---|
| | | | |

APPROVED BY: _____ R.C.E. 047282
ENGINEERING SERVICES MANAGER FOR CITY ENGINEER
DATE: _____

APPROVED BY: _____ R.C.E. 047282
ENGINEERING SERVICES MANAGER FOR CITY ENGINEER
DATE: _____

CITY OF VISALIA
PUBLIC WORKS DEPARTMENT
336 NORTH BEN MADDOX WAY
VISALIA CA. 93292

PARSONS
100 WEST WALNUT STREET
PASADENA, CA 91124
OFFICE: 626.440.2000
FAX: 626.440.2630
WWW.PARSONS.COM

PROJECT NAME: CITY OF VISALIA
WATER CONSERVATION PLANT UPGRADES

SHEET TITLE: RECYCLED WATER PIPELINE
DETAILS
CITY & COUNTY STD. DETAILS

PROVOST & PRITCHARD CONSULTING GROUP
EST. 1968
An Employee Owned Company
130 NORTH GARDEN STREET
VISALIA, CALIFORNIA 93291-6362
559/636-1166 FAX 559/636-1177
www.ppeng.com

COPYRIGHT 2010 by PROVOST & PRITCHARD ENGINEERING GROUP, INC. ALL RIGHTS RESERVED
The firm of Provost & Pritchard Engineering Group, Inc. expressly reserves its common law copyright and other applicable property rights in these plans. These plans are not to be reproduced, changed, or copied in any form or manner whatsoever, nor are they to be assigned to a third party without first obtaining the written permission and consent of Provost & Pritchard Engineering Group, Inc. In the event of unauthorized reuse of these plans by a third party, the third party shall hold the firm of Provost & Pritchard Engineering Group, Inc. harmless, and shall bear the cost of Provost & Pritchard Engineering Group, Inc.'s legal fees associated with defending and enforcing these rights.

| | |
|---|---|
| ISSUE DATE: | 12-6-2010 |
| CHECKED BY: | |
| DESIGNED BY: | |
| DRAWN BY: | P&P |
| SCALE: | AS NOTED |
| DWG. NO.: | R-92 |
| SHEET | OF |

NOT FOR CONSTRUCTION

V:\Clients\Parsons-1979\197909V1-Visalia WCP Pipelines\DWG\SHEET\197909V1-DT-CITY DETAILS last saved by MIKEPR on 12/21/10 plotted 4/5/2010 10:11:25 AM
V:\Clients\Parsons-1979\197909V1-Visalia WCP Pipelines\DWG\SHEET\197909V1-DT-CITY DETAILS.dwg Jan 05, 2011 - 4:37pm