ATTACHMENT 3 – WORK PLAN

APPENDIX J

ICF International, as a subconsultant to Parsons in proposal to the City of Visalia for Environmental Documentation services for improved wastewater treatment plant and reuse pipeline project

March 12, 2010

Mr. Paul Skager, PE
Project Manager
Parsons Water and Infrastructure, Inc.
100 West Walnut Street
Pasadena, CA 91124

Subject: City of Visalia WCP Upgrade Project Environmental Documentation Subcontract Amendment No. 1

Dear Mr. Skager:

The purpose of this letter is to request an amendment to our subcontract (Subcontract No. 260449-30002) with Parsons Water and Infrastructure, Inc. (Parsons) for the preparation of environmental documentation for the City of Visalia Water Conservation Plant Upgrade Project (project). At the request of Parsons, we are submitting this amendment because we are requesting a 4% increase to our billing rates found in the current subcontract. We are also requesting a modest increase in project management hours. Additionally, we are requesting a modest number of hours to incorporate the analysis of a proposed water agreement between the City of Visalia and Tulare Irrigation District (TID) into the project's Environmental Impact Report (EIR). Finally, we are requesting additional hours to conduct biological and cultural resources surveys of the recycled water conveyance facilities; these surveys were not part of the original scope of work and are now necessary to environmentally clear these facilities at a project level.

Revised Rates

The subcontract explicitly states on page 6 that rates of the original subcontract are effective through December 31, 2009 and are subject to annual adjustment. The amount of adjustment is not to exceed 4% per annum. We have prepared the attached budget (Attachment 1) that includes all originally agreed upon scoped items and total hours. A difference between the attached budget and the original budget is the hourly billing rate adjustment of 4%. Changes to the hourly billing rates are highlighted in yellow.

Additional Project Management

A modest number of project management hours have been added to the original budget. These hours are necessary because of additional coordination required between ICF, Parsons, and the remaining project team in order to determine the scope of the upcoming environmental documentation effort based on changes to the project description since we originally proposed on the project. We feel that this additional project management effort is due to new information and

therefore, out of scope, and we respectfully request that our project management hours be increased as shown in Attachment 1. Additional project management hours are highlighted in yellow.

Project EIR Water Agreement Analysis

It is our understanding that an environmental document is currently being prepared by another consultant for the water agreement in accordance with the National Environmental Policy Act (NEPA). Because the water agreement is necessary to facilitate the use of the plant's recycled water at full build out, it is a connected action to this project and therefore, requires analysis in the project's EIR in accordance with the California Environmental Quality Act (CEQA). ICF will incorporate the findings of the water agreement's NEPA analysis into the project's EIR. The following assumptions have been made in scoping the water agreement analysis level of effort for the project's EIR:

- The water agreement analysis prepared by the outside consultant is sufficient to adequately determine the level of impact for the project's EIR.
- No additional analysis will be required by ICF to determine the level of impact for the project's EIR.
- Sufficient information will be provided to ICF to adequately describe the proposed water agreement in the project's EIR.
- Extensive coordination (more than 2 hours) with the outside consultant will not be necessary.

If any of these assumptions are incorrect, work performed by ICF to make the analysis sufficient for the project's EIR is out of scope and subject to a cost amendment. ICF will not perform any out of scope work without first preparing a scope and budget for necessary work and receiving written approval by Parsons. Additional hours required to incorporate the water agreement analysis into the project's EIR are highlighted in yellow.

Project EIR Biological and Cultural Resources Surveys

Our original scope of work assumed that ICF was to environmentally clear the proposed facilities within the footprint of the existing plant at a project level and discuss the proposed recycled water conveyance facilities as a programmatic level. Therefore, we assumed that surveys for the recycled water conveyance alignments were not part of the original scope of work and therefore, we did not budget for now needed surveys of these facilities. The original scopes states:

> Phase III requires offsite improvements (i.e., the reuse pipelines) and therefore, impacts (e.g., biological resources, cultural resources, construction-related traffic, etc.) of these offsite improvements would need to be analyzed to the requirements of CEQA. If requested by the City, ICF Jones & Stokes can prepare a separate work plan and cost estimate and develop a team to perform all necessary surveys and environmental analyses for the future offsite reuse pipelines to be incorporated into the EIR.

The following is the proposed work plan, and the total cost estimate for the biological and cultural resources survey work for offsite improvements (i.e., recycled water conveyance structures and

proposed basin south of plant) at a project level is $7,488; hours required for the surveys are highlighted in yellow. Offsite improvements include about 6 linear miles of proposed recycled water conveyance facilities that would need to be surveyed for biological and cultural resources. Survey work for onsite improvements (i.e., within the plant's footprint) is part of the original scope. Russell Sweet (Biologist) and Mark Robinson (Archaeologist) were on the existing team when we originally proposed for this work and will be the ones to perform these surveys. Their resumes are available upon request.

Reconnaissance-Level Biological Survey Scope

ICF will conduct a general reconnaissance-level survey of both onsite and offsite improvements. This survey will consist of surveying the disturbance areas within the existing plant's footprint, a windshield survey of the recycled water conveyance facilities' alignments, and conducting pedestrian surveys in areas that warrant further investigation (e.g., along ditch banks, along the perimeter of the property, and areas where small mammal burrows are observed). The intent of the survey is to generally describe the biological resources present and to evaluate the habitats suitability necessary to support species that are listed as endangered, threatened, or of special concern in order to determine the need to conduct focused surveys and/or further habitat evaluations. Special emphasis will be placed on identifying potentially suitable habitat for special-status plant and animal species and any sign (e.g., nests, dens, tracks, scat, prey remains, etc.). Although unlikely, if it is determined that the project could affect species that are endangered, threatened, or of special concern and that focused surveys will be necessary, ICF will immediately notify Parsons to discuss focused survey needs, scope, and additional budget. Focused surveys are not part of this proposed amendment.

Intensive-Level Cultural Resources Survey Scope

A qualified archaeologist will perform an intensive pedestrian survey of the approximately 6 mile length of the proposed project right of way, walking a series of parallel transects spaced 15 meters apart. All areas likely to contain archaeologically sensitive cultural resources will be carefully inspected. However, for this scope, it is assumed that no previously unrecorded archaeological sites requiring recordation or architectural resources requiring evaluation by an architectural historian will be found during this survey. Although unlikely, if it is determined that the project could require recordation of a site or sites and/or historic evaluation of a structure or strucutres, ICF will immediately notify Parsons to discuss needs, scope, and additional budget. Site recordation and/or historic evaluation are not part of this proposed amendment.

We are proposing a revised total cost for the project of $248,567, which is **$39,255** more than the $209,312 originally budgeted. If you have questions, please contact Steve Esselman in the Bakersfield office at 661-717-5860 or email him at sesselman@icfi.com. We look forward to working with you on this important project.

Sincerely,

Charles Smith, AICP
Vice President

Attachment
Attachment 1—Revised Budget

cc: Chad Beckstrom, AICP, ICF International
Steve Esselman, ICF International

Attachment 1. 2010 REVISED Cost Estimate for Visalia WCP Upgrades Project EIR

	Consulting Staff													Production Staff							
Employee Name	Beckstrom C	Henry W	Bogdan K	Esselman S	Anderson C	Williams M	Sweet R	Robinson M	Grimes R	Greene M	Barnes J	Zielke K									
Project Role	Project Director	Project Manager	Env Counsel	Senior Planner	Aesthetics	Air Quality	Biological Resources	Cultural Resources	Hydrology / WQ	Noise	Traffic	Planner									
Task *ICF Labor Classification*	Proj Dir	Sr Consult III	Sr Proj Dir	Sr Consult I	Sr Consult I	Sr Consult III	Assoc Consult III	Sr Tech Analyst	Proj Dir	Mng Consult	Mng Consult	Assoc Consult II	Subtotal	Editor	Support Editor	Pub Spec	Admin Tech	Subtotal	Labor Total	Direct Expenses	Total Price
Task 1: Project Analysis Overview, Description, and Background													$0					$0	$0		
Initial Meeting	8	6											$2,708					$0	$2,708		
Field Investigation		8		8									$2,248					$0	$2,248		
Develop Project Description and Review Background Informatio	1	8		8	2	2	2	2	2	2	2	8	$5,821					$0	$5,821		
Water Agreement Analysis Up Scope	1	2		2									$791						$791		
Task 2: Prepare and Distribute IS and NOP/NOI	1	4	1	16	1	1	1	1	1	1	1	1	$4,563	4	8	8	4	$1,888	$6,451		
Water Agreement Up scope	1	1		4			1		1				$1,269						$1,269		
Task 3: Prepare Administrative Draft EIR/EIS			4										$1,040	10	20	20	10	$4,720	$5,760		
Table of Contents													$0	1	2			$249	$249		
Executive Summary	1	16											$2,565					$0	$2,565		
Chapter 1. Introduction	1	1		8									$1,455					$0	$1,455		
Chapter 2. Project Description	1	4	1	24	1	1	1	1	1	1	1	1	$5,643					$0	$5,643		
Water Agreement Analysis Up Scope	1	1		6									$1,185						$1,185		
Chapter 3. Environmental Setting, Impacts, and Mitigation Measures		1		4									$686					$0	$686		
Aesthetics	1	4			24								$4,053					$0	$4,053		
Agricultural Resources	1	4										16	$2,637					$0	$2,637		
Air Quality	1	8				60							$11,357					$0	$11,357		
Biological Resources	1	4					60						$8,313					$0	$8,313		
Cultural Resources	1	4						60					$12,033					$0	$12,033		
Geology and Soils	1	4		24									$4,053					$0	$4,053		
Hazards and Hazardous Materials	1	4		24									$4,053					$0	$4,053		
Hydrology and Water Quality	1	4							24				$6,309					$0	$6,309		
Land Use and Planning	1	4										24	$3,549					$0	$3,549		
Mineral Resources	1	2		8									$1,601					$0	$1,601		
Noise	1	4								24			$5,301					$0	$5,301		
Population and Housing	1	8		24									$4,637					$0	$4,637		
Public Services and Utilities	1	4										24	$3,549					$0	$3,549		
Recreation	1	4										8	$1,725					$0	$1,725		
Transportation and Traffic	1	2									20		$4,261					$0	$4,261		
Water Agreement Analysis Up Scope	1	1		4	2	2	8	2	8	1	1	4	$5,553					$0	$5,553		
Survey Up Scope							24	24					$7,488					$0	$7,488		
Chapter 4. Cumulative Impacts	1	8	2	24									$5,157					$0	$5,157		
Water Agreement Analysis Up Scope	1	2		6									$1,331					$0	$1,331		
Chapter 5. Alternatives Analysis	4	20	2	40								20	$12,036					$0	$12,036		
Water Agreement Analysis Up Scope	1	5		10									$2,309					$0	$2,309		
Chapter 6. Growth-Inducing Impacts	4	20	2										$4,356					$0	$4,356		
Water Agreement Analysis Up Scope	1	5											$959					$0	$959		
Chapter 7. Significant Irreversible Changes	1	8											$1,397					$0	$1,397		
Water Agreement Analysis Up scope	1	2											$521					$0	$521		
Chapter 8. References		4		4	1	1	1	1	1	1	1	4	$2,796	4	8			$996	$3,792		
Chapter 9. List of Preparers		2											$292	1	2			$249	$541		
Chapter 10. Acronyms and Abbreviations													$0	1	2			$249	$249		
Task 4. Prepare and Distribute Draft EIR/EIS and NOC/NOA	4	20	2	20	4	4	4	4	4	4	4	20	$14,200	10	20	20	10	$4,720	$18,920		
Water Agreement Analysis Up Scope	1	5		5									$1,634					$0	$1,634		
Task 5. Prepare Administrative Draft Final EIR/EIS	4	40	2	40	4	4	4	4	4	4	4	4	$17,996	10	20	20	10	$4,720	$22,716		
Water Agreement Analysis Up Scope	1	10		10	1	1	1	1	1	1	1	1	$4,369					$0	$4,369		
Task 6. Prepare and Distribute Final EIR/EIS	2	10	1	10	2	2	2	2	2	2	2	2	$6,188	4	8	8	4	$1,888	$8,076		
Water Agreement Analysis Up Scope	1	2		2	1	1	1	1	1	1	1	1	$2,121					$0	$2,121		
Task 7. Prepare Administrative Draft and Final MMRP		4											$584					$0	$584		
Administrative Draft MMRP Preparation	1	2		10									$1,871	2	8	8	4	$1,722	$3,593		
Final MMRP		1		2									$416	1	4	4	2	$861	$1,277		
Task 8. Prepare Administrative Draft and Final Findings/SOC													$0					$0	$0		
Administrative Draft Findings/Statement	1	2		10									$1,871					$0	$1,871		
Final Findings/Statement		1		2									$416	2	8	8	4	$1,722	$2,138		
Task 9. Prepare Administrative Draft and Final Staff Report and Resolution													$0	1	4	4	2	$861	$861		
Administrative Draft Staff Report/Resolution	1	4		20									$3,513					$0	$3,513		
Final Staff Report/Resolution		2		4									$832					$0	$832		
Task 10. Prepare and File Notice of Determination		4											$584	2	8	8	4	$1,722	$2,306		
Task 11. Meeting Attendance and Project Management	8	20		20									$7,452	1	4	4	2	$861	$8,313		
Project Management Up Scope				12									$1,620					$0	$1,620		
Total hours	70	320	17	415	43	79	110	103	50	42	38	138		54	126	112	56				
ICF billing rates	$229	$146	$260	$135	$135	$166	$125	$187	$229	$187	$187	$114		$83	$83	$83	$57				
Subtotals	$16,030	$46,720	$4,420	$56,025	$5,805	$13,114	$13,750	$19,261	$11,450	$7,854	$7,106	$15,732	$217,267	$4,482	$10,458	$9,296	$3,192	$27,428	$244,695		
Percent of Total Effort Total Hours = 1773	3.9%	18.0%	1.0%	23.4%	2.4%	4.5%	6.2%	5.8%	2.8%	2.4%	2.1%	7.8%		3.0%	7.1%	6.3%	3.2%				
Direct Expenses																					
521.00 Meals, and Lodging														**Note: Yellow highlights mean changes from the original 2008 cost.**						$100	
523.02 Reproductions (8.5x11 Color = .16/page) (8.5x11 B&W = .08/page)																				$2,000	
523.04 Postage and Delivery																				$500	
523.05 Travel, Auto, incld. Mileage at current IRS rate (.50/mile)																				$500	
523.08 Per Diem at $160/day																				$320	
523.09 Project Supplies																				$100	
Mark up on all non-labor costs and subcontractors: 10%																				$352	
Direct expense subtotal																				$3,872	
Total price																					$248,567

ATTACHMENT 3 – WORK PLAN

APPENDIX K

Kaweah Delta WCD Oakes Basin Demonstration Project, Technical Memorandum No. 2 – Basis of Design, Camp Dresser & McKee, Inc, April 1999

Kaweah Delta Water Conservation District
Oakes Basin Demonstration Project

Draft Technical Memorandum No. 2
Basis of Design

1. Overview and Background

The Oakes Basin Demonstration Project is an integrated resource management project to provide flood control, groundwater recharge, and habitat enhancement for the Visalia area. The project is part of the Kaweah River Corridor Enhancement Study, a multi-year study to evaluate the feasibility of developing integrated resource management projects within the Kaweah River corridor. The study is being funded by the U.S. Bureau of Reclamation, with the Kaweah Delta Water Conservation District (District), the City of Visalia, and Tulare County providing local sponsorship. The project will involve construction of groundwater recharge/storm water detention ponds and associated facilities on the site to accomplish the following general goals:

- Recharge the groundwater to help offset long-term declining groundwater levels due to municipal and agricultural pumping.
- Provide storm water detention facilities to help alleviate nuisance flooding in the City of Visalia.
- Restore riparian and valley oak habitat along the Kaweah River corridor.

The purpose of this technical memorandum is to provide the basis of design for the Oakes Basin Demonstration Project. Following this introduction section, Section 2 – Project Component Design presents preliminary design details for each of the project elements. Section 3 – General Design Criteria presents the criteria used for the design of the demonstration project. The technical memorandum concludes with Section 4 – Project Implementation, which includes a preliminary construction cost estimate, a relational schedule and discussion of construction phasing and sequencing.

2. Project Component Design

This section describes the design for each of the major elements of the project. Each description also includes a discussion of the rationale for selection of the particular design. A plan view of the project, showing all major components, is shown in Figure 2-1. Table 2-1 summarizes project components, including key features and construction phasing.

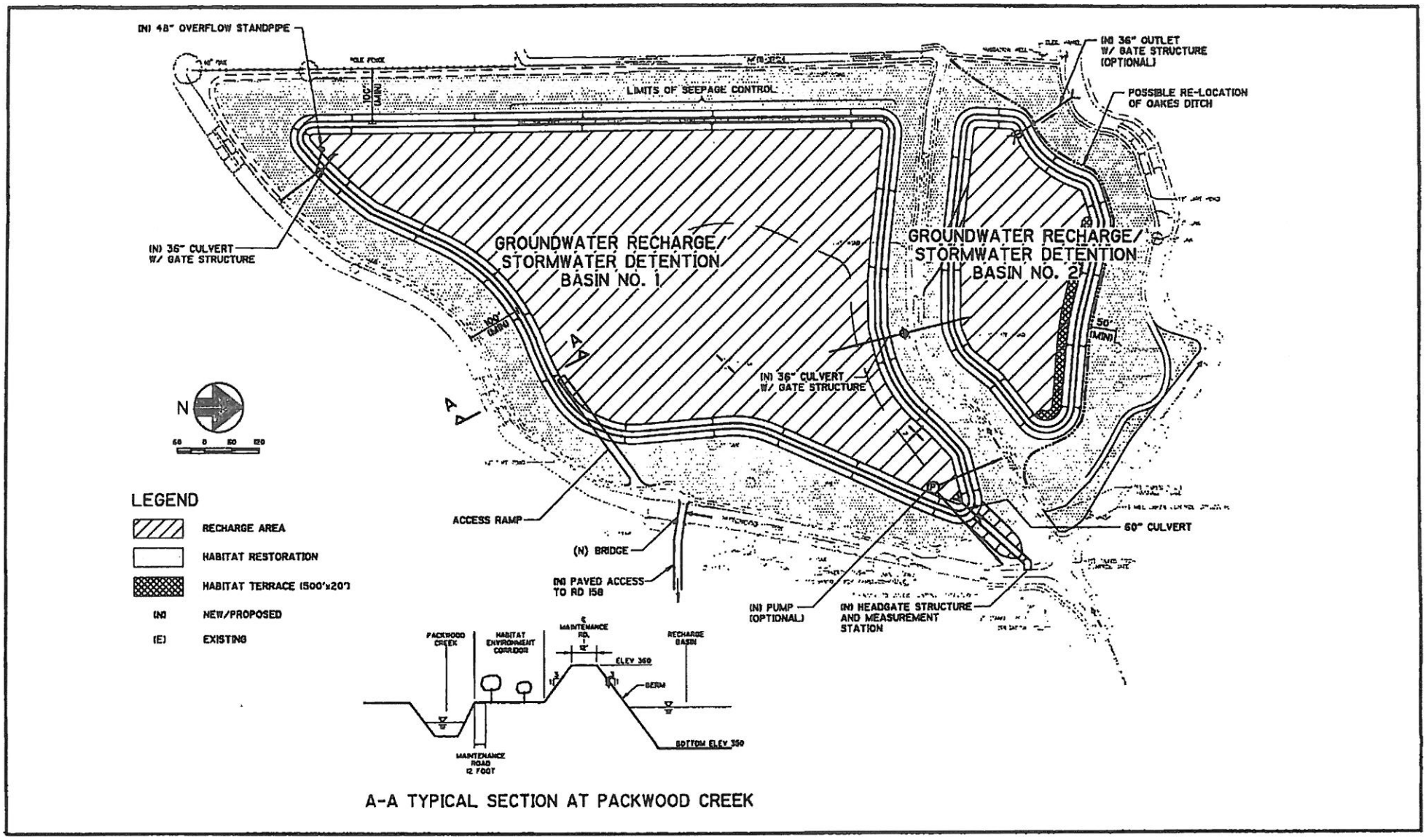

A-A TYPICAL SECTION AT PACKWOOD CREEK

CDM Camp Dresser & McKee

Figure No. 2-1
Oakes Basin Demonstration Project Site
Full Build Out

Will be 11x17 in final report.

Table 2-1
Summary of Project Components

Project Component	*Key Features*	*Phasing (1)*
Groundwater Recharge/Storm Water Detention Basins	• 36 acre-feet of storage with no excavation; 166 acre-feet of storage at buildout. • 200 acre-feet of storage if Oakes Ditch re-located. • Bottom elevation of 350, based on five-foot separation with regional high groundwater • 3:1 side slopes • access ramps for maintenance	Phase II
Perimeter Berms	• Top elevation 360 feet • Includes 12-foot maintenance road • 100-foot setback from adjacent properties and creeks to mitigate lateral off-site flow • low permeability layer underneath berms to mitigate lateral off-site flow	Phase I, if sufficient funding available
Access Bridge	• Designed for HS-20 traffic loads • Concrete foundation grade beams with steel deck	Phase I
Access Road	• 0.25-foot AC over 0.5-foot aggregate base • 12-foot paved width	Phase I
Headgate Structure and Inlet culvert	• 0 to 125 cfs flow capacity • constant-head orifice measurement • 60-inch diameter inlet culvert	Phase I
Outlet Structure	• 36-inch culvert with gate structure discharging to Packwood Creek • 48-inch diameter standpipe for overflow control • Future provision for pumping and/or outlet structure to Mill Creek	Phase I (Packwood Creek) Phase II (Mill Creek)
Habitat Restoration	• 100-foot wide buffer around perimeter of basins • riparian habitat restoration terrace in basin north of Oakes Ditch • three year maintenance program to establish habitat	Phase II

(1) Phase I: Summer 1999; Phase II: Subsequent construction seasons.

2.1 Groundwater Recharge/Storm Water Detention Basins

Two basins are proposed, a 17-acre basin south of Oakes Ditch, and a 3.8-acre basin north of Oakes Ditch. A single, 25-acre basin was also evaluated as part of a possible realignment of Oakes Ditch (see Section 2.4). Berms around the basins maximize the available storage area, while a buffer along the site perimeter provides for a habitat enhancement corridor. A 36-inch diameter culvert would cross under Oakes Ditch to connect the two basins. A bottom elevation of 350 feet was selected for the basins, to maximize storage capacity while maintaining a five-foot separation between the basin

bottom and the regional wet-season high groundwater level. The seasonal high groundwater level was determined to be 345 feet, based on well monitoring data collected by the District over the past 35 years. On average, the basins would be excavated four to eight feet below the existing ground surface.

The side slopes in the basin (below the berms) will be 3 horizontal to 1 vertical (3:1). Berm geometry is discussed in the next section. A gravel surfaced access ramp would be constructed into each basin for maintenance.

Design/Maximum Water Surface

The water surface elevation (WSEL) at the terminus of the Kaweah River is regulated by control structures on Mill Creek, Packwood Creek, and Oakes Ditch. Based on historical water marks, the normal high WSEL appears to vary from elevation 358 feet to 359 feet, with a high WSEL of approximately 359.7 feet. Based on this information, a normal high WSEL in the basin of 358.5 feet was selected (water surface elevation for overflow out of basin). With the berms in place and the basin fully excavated, the total storage volume available would be approximately 166 acre-feet. (136 acre-feet in the south basin, 30 acre-feet in the north basin). If Oakes Ditch is relocated, the available storage increases to 200 acre-feet. Table 2-2 lists the available storage in the basins with the berms in place, before and after excavation of the basin.

Table 2-2
Basin Storage Volumes

	South Basin (acre-feet)	***North Basin (acre-feet)***	***Single Basin Oakes Ditch relocated (acre-feet)***
Berms in place/no excavation	30	5.5	41
Excavated to elev. 350	136	30	200

Groundwater Recharge

To enhance groundwater recharge rates at the site, the underlying low permeability layer will be penetrated to increase surface water infiltration into the underlying sand aquifer. Recharge enhancement options, including constructing a system of perforated risers or drilled/excavated recharge cells filled with onsite permeable materials, will be incorporated into the project design.

Groundwater infiltration rates into Basin 1 are estimated at 1 ft/day across the 20-acre test area (Fugro West, 1998). **[Estimated recharge potential will be evaluated and a detailed discussion will be prepared following evaluation of the final Fugro Report and remolded permeability results. Future evaluations will include an evaluation of the existing recharge estimate to determine potential recharge rates using a variety of enhancement techniques at each proposed basin(s).]**

Construction of the Basins

[Evaluation and design of recharge basins will be completed following review of the geotechnical report and remolded permeability results. CDM will evaluate the construction of the groundwater recharge basins and will provide detailed design information relevant to basin construction, perimeter berm design, select excavation/grading of low permeability materials, including recharge enhancement design options.]

2.2 Perimeter Berms

Perimeter berms around the recharge/detention basins provide a number of benefits at a relatively low cost. Most importantly, the new perimeter berms allow for storage of additional volumes of storm water. Without any berms, the south basin would be limited to 80 acre-feet, and the north basin limited to 20 acre-feet (versus 166 acre-feet total with berms). From a groundwater recharge perspective, the berms allow for a greater hydraulic head in the basin, which provides improved recharge performance. The berms also provide storage capacity before the basin is excavated to its ultimate depth.

The berms would be designed in general accordance with the U.S. Army Corps of Engineers engineering manual "Design and Construction of Levees" and the recommendations in the preliminary geotechnical report (Fugro West, 1998). Figure 2-2 is a cross-section of a typical berm at full buildout.

Fugro West performed a slope stability analysis on a conceptual basin with 20-foot high slopes and a slope ratio of 2.5 horizontal to 1 vertical (2.5:1) (Fugro West, 1998). Their analysis showed that short-term, long-term drained, and rapid drawdown configurations had a minimum static safety factor of 1.5. Fugro West recommended slope design of 2.5:1 or flatter slopes, and also recommended constructing a stability fill in cut slopes (see Plate 11 of the Fugro report). The use of a stability fill could add significant costs to the berm construction. Since the original analysis, the overall height of the inside slope has been reduced from 20 feet to 10 feet, with a maximum cut height of 8 feet. In concert with the proposed slope of 3:1, it is likely that the volume of stabilized fill may be reduced upon additional study. Other cost effective alternatives might include leaving an additional shoulder section on the inside of the berm (which could also be used as a planting terrace), or flattening the slope of the berm in cut areas.
The need for a stability fill will be reviewed with Fugro West during final design, once the low permeability barrier has been evaluated.

A top width of 12 feet was chosen to allow a maintenance vehicle to operate along the top. This width also allows for the future placement of base rock surfacing along the top of the berm (and a future width of 10 feet), although this is not standard practice for the District at this time. The waterside (basin side) slope will be 3:1. The land-side slope of the berm will also have a side slope of 3:1. These side slopes are slightly flatter than Fugro West's maximum slope recommendation. The use of these flatter slopes provides improved stability at little additional cost. It also provides more flexibility in the use of native material. The berm geometry and materials specification will be finalized during final design.

The top height of the berm was determined based on a desire to maximize the amount of water that could be gravity fed into the basin. Allowing for headloss and a slightly lower design water surface

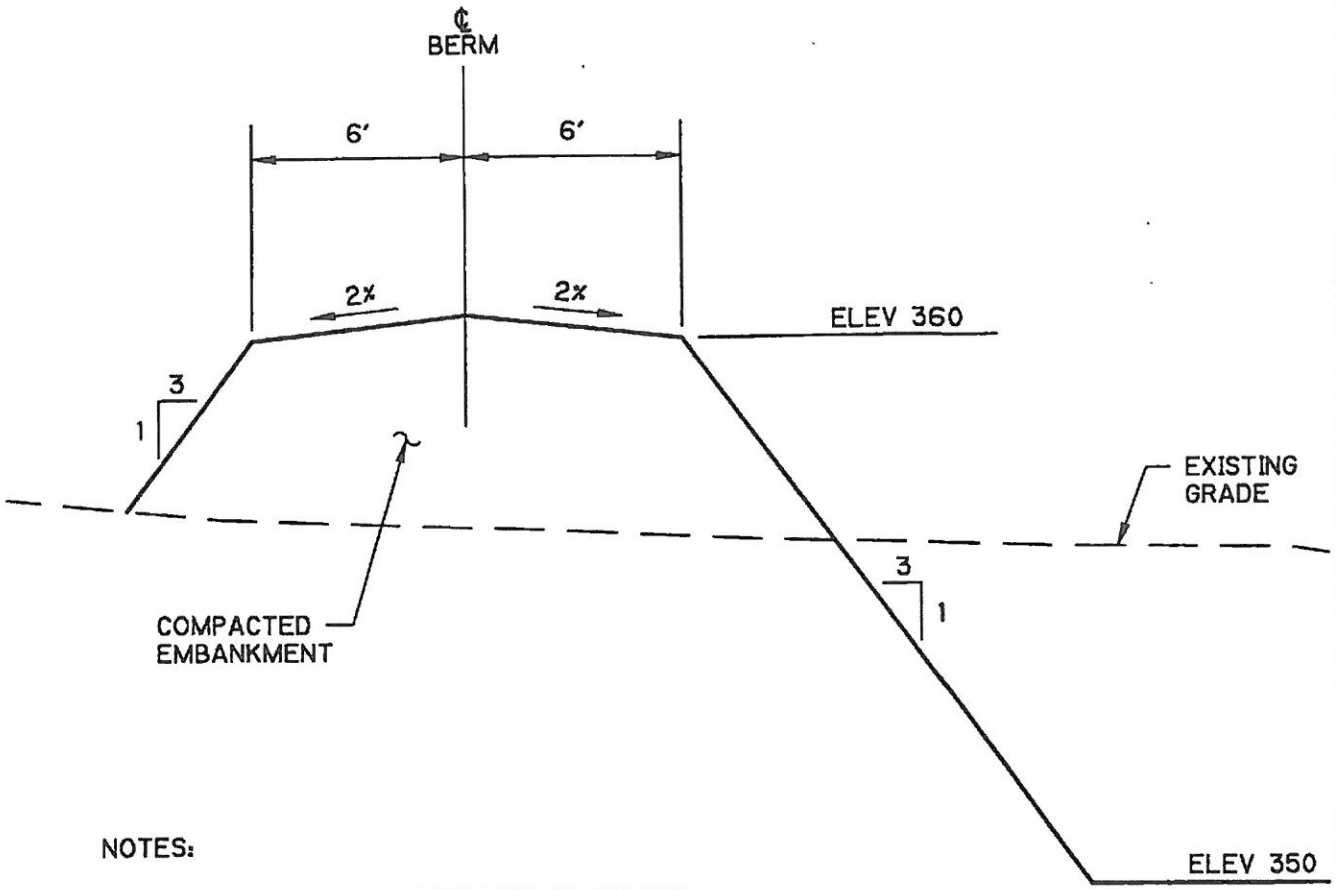

NOTES:

1. CLEAR, GRUB, AND STRIP TOP 6" OF SOIL UNDER BERM.

2. COMPACT EMBANKMENT TO 90% RELATIVE COMPACTION.

3. MATERIAL SHALL MEET SPECIFICATION REQUIREMENTS.

NOT TO SCALE

N:\ACAD\8162\14468\Figure\ Fig002-2 04/20/99 09:30 Nguyentv

CDM Camp Dresser & McKee

Figure No. 2-2
Oakes Basin Demonstration Project
Typical Berm Cross-Section

then in the Kaweah River, a normal maximum high WSEL in the basin of 358.5 feet was selected. At this elevation, water in the basin would begin to spill over into a standpipe and enter back into Packwood Creek (see discussion below on outlet structures). Based on the above, a design elevation of 360 feet was selected for the berms. This allows a freeboard of 1.5 feet under normal operation, and a freeboard of 1.0 foot should a failure of the control system occur (gates left fully open).

Due to lateral seepage issues discussed in Section 2.3, a relatively low permeability layer (10^{-3} to 10^{-4} feet/day) will be placed along portions of the west property boundary and adjacent to Packwood Creek underneath the berm, or as part of the stabilized fill.

Hydroseeding

All constructed cut and fill slopes (e.g. berm side slopes surrounding the recharge basins) would be hydroseeded to reduce erosion and provide herbaceous cover. This would provide for improved erosion control and visual aesthetics. In addition, the rapid establishment of herbaceous cover through hydroseeding will enhance wildlife habitat by providing cover and forage. Table 2-3 provides the species mix and seed application rates for hydroseeding. The species to be hydroseeded were selected to both help provide effective erosion control and to enhance the diversity of native species that compose the herbaceous cover at the project site.

Fertilizer, wood fiber, tackifier, and straw (if required for erosion control) application rates will be developed during the preparation of the plans and specifications.

Table 2-3
Hydroseed Species Mix and Seed Application Rates

Common Name	Scientific Name	Type	Minimum Percent Germination	Application Rate Pure Live Seed (lbs/acre)
Blue wildrye	*Elymus glaucus*	Perennial grass	80	25
Meadow barley	*Hordeum brachyantherum*	Biennial grass	80	30
Zorro fescue	*Vulpia myorus*	Annual grass	80	10
Arroyo lupine	*Lupinus succulentus*	Annual leguminous forb	75	10
California poppy	*Eschscholzia californica*	Annual forb	75	2.0

2.3 Mitigation for Lateral Flow Out of Basin

In 1998, the District constructed a temporary headworks and temporary berms around the perimeter of the property south of Oakes Ditch. Since then, the District has operated an interim recharge project on the south portion of the site. During the District's interim project, lateral seepage problems were detected along Packwood Creek on the east property boundary, and in the walnut orchard along the west property boundary. This is because water in the basins tends to infiltrate both vertically and laterally. Since high permeability sand layers extend horizontally beneath the site, a substantial amount of water migrates laterally as it infiltrates vertically to the groundwater table.

Four alternative were developed and evaluated to address the existing and potential concerns about lateral migration of groundwater. These alternatives are discussed below:

Alternative 1. Setback of berms. To reduce potential problems associated with lateral movement of water, berms have been set back a minimum of 50 to 100 feet from property boundaries and adjacent to Packwood and Mill Creeks, and Oakes Ditch. The setback will substantially increase the distance recharge water would have to travel to these areas, and the hydraulic losses would tend to reduce both the volume and head of the lateral flows.

Alternative 2. Low permeability layer A low permeability layer constructed from onsite relatively low permeability materials could be incorporated underneath the berm to minimize lateral flow of water to the adjacent orchard or to Packwood Creek. The low permeability layer would be constructed from onsite materials excavated from the basin. In order to effectively reduce the volume and elevation of laterally flowing recharge, the depth of the barrier would need to be in the range of ___ to ___ feet, with a minimum width of ___. Figure 2-3 **[to be provided – pending remolded permeability data and subsequent analysis]** is a schematic of the low permeability layer concept. If stabilized fill is placed, the low permeability material would be incorporated into the fill section.

Alternative 3 . Stabilizing the Packwood Creek bank By stabilizing the bank along Packwood Creek, lateral flow from the basin into the creek (when dry), would not erode the bank. This could be done by either sloping the bank back (assumed at 4:1), or by armoring the side of the bank with rock. The existing bank slope is 1.5:1.

Alternative 4. Constructing a new regulating weir in Packwood Creek. The new weir would be placed downstream of the existing regulating weir and flume at the head of Packwood Creek near the southern end of the property boundary. With the new weir, there would be water in the entire reach of Packwood Creek adjacent to the property when there is water in the recharge basin. The water level in Packwood Creek would minimize the hydraulic head between the basin and the Packwood Creek and thus limit lateral flow. The estimated WSEL would be 353 feet in Packwood Creek, based on the adjacent bank heights. The existing flume could remain operational during low flows in Packwood Creek. During higher flows the downstream weir structure would need to be removed/lowered. The new regulating weir would be similar in size and design to the existing Packwood Creek structure.

Table 2-4 provides a construction cost comparison of the various alternatives for mitigation of lateral flow. Maintenance costs are not shown since they are expected to be nominal. Appendix A includes a summary of preliminary construction costs for each alternative.

Table 2-4
Cost-Benefit Analysis
Alternatives to Mitigate Lateral Flow

Alternative	*Preliminary Construction Cost Estimate*	*Advantages*	*Disadvantages*
Alt. 1 – Setback of berms	None	▪ Provides for habitat corridor	▪ does not maximize site for water storage (reduced ultimate storage of 50 acre-feet)
Alt. 2 – Low permeability layer	Orchard – $28,800 (1) Packwood - $56,000 (1)	▪ long term solution ▪ no operational requirements ▪ improves berm stability	
Alt. 3A – Flatten Packwood Creek Slope to 4:1	$22,500	▪ relatively inexpensive	▪ reduction in habitat corridor and/or basin storage ▪ Minor maintenance may still be required
Alt 3B. – Armor Packwood Creek Bank	$46,000	▪ Protects slope	▪ May still require minor maintenance
Alt. 4 – New regulating weir	$65,000	▪ may get additional recharge from creek	▪ Increases complexity of operation ▪ Upper 2-5 feet of bank would still be exposed and subject to bank erosion.

(1) Rough cost estimate -- will be revised once all site hydrogeology data received and evaluated.

Recommendations

To provide a habitat enhancement corridor, berms will be set back a minimum of 100 feet. Providing a low permeability layer adjacent to the walnut orchards to the west has also been agreed to in concept with the neighboring property owner. These measures should sufficiently reduce or eliminate the amount of lateral flow from the basins to the walnut orchards.

[Evaluation of design Alternatives 1 and 2 cannot be completed until final geotechnical study and permeability data received. Once we receive this information, we will assess seepage control criteria to evaluate the estimated lateral flow for alternatives 1 and 2.

Under Alternative 1, CDM will evaluate seepage and hydrostatic pressure conditions to determine the suitability and effectiveness of this alternative. This alternative is the most desirable from a cost and construction benefit. The evaluation will calculate seepage flows in Packwood Creek under both wet and dry conditions, and for flows in Oakes Ditch along the west property boundary to evaluate any influence to the adjacent walnut orchard property.

Under Alternative 2, CDM will evaluate seepage and hydrostatic pressure conditions to determine the effectiveness of a low permeability barrier along the basin slope face. If needed, CDM will evaluate the construction of a keyway to cut off groundwater seepage and reduce negative lateral flow conditions, that may impair surfacial slope stability along Packwood Creek

and the walnut grove. This evaluation will include design and construction requirements to properly implement alternative 2.]

2.4 Lateral Seepage from Oakes Ditch into Basins

The Oakes Ditch Company Board of Directors, which owns and operates Oakes Ditch, has expressed concerns that the project may increase infiltration of water through the section of ditch that bisects the District property, thus reducing the amount delivered. This could occur in two ways: 1) Through uptake from adjacent plants; or 2) through increased losses into the basins when the basin water level is lower than the ditch water level.

To address the concerns related to plantings, a buffer distance of 20 feet will be established between the riparian tree plantings and the centerline of Oakes Ditch to minimize the effect of the plantings on surface flows in the ditch. In addition, a 12-foot wide dirt access road will be positioned between the plantings and the ditch. The 20-foot buffer should prevent tree roots from interacting with seepage water from Oakes Ditch in the short term (first 10-20 years after planting), when the trees are young and relatively small. However, the roots of mature valley oak trees could eventually reach the ditch from a distance of 20 feet.

The perimeter berms would be set back a minimum of 50 feet from Oakes ditch. When the side slopes of the ditch are taken into account, seepage would have to travel a minimum of 75 feet before it encountered the basin. It is unlikely that at this distance increased measurable losses would occur. In addition, because the ditch has been in use for some time, it is likely that the bed has been filled to some extent in the immediate area of the channel, by finer particles filling in the voids in the sandier materials.

Another solution to this concern is to relocate Oakes Ditch along the north side of the project, adjacent to the northernmost perimeter berm. By using low permeability material to recreate the ditch, seepage concerns would be allayed. An advantage of this solution is that an additional 34 acre-feet of storage could be created, albeit at the loss of habitat enhancement area.

[Specific recommendation whether to re-locate ditch will be developed based on analysis of site hydrogeology.]

2.5 Access Bridge

Several different alternative methods and materials of construction were evaluated for the access bridge. The final selection of the bridge framing described below was arrived at from evaluation of simplicity of construction and cost efficiency. The following description of the access bridge outlines the structural framing and support system.

The bridge will be located upstream of the existing bridge, as shown on Figure 2-1. The bridge will be designed for one-way traffic, and will have a width of 13.5 feet. The bridge will have a 10-inch thick reinforced concrete slab over 16 gauge galvanized metal deck. The continuous metal deck will span 2-1/4 feet between W 18 x 60 wide flange steel beams. The seven steel beams will span approximately 30 feet between reinforced concrete foundation grade beams. The grade beams will continuously span over and be supported on the 14 x 14 inch square precast prestressed concrete piles. The piles will be driven to a depth of about 20 feet. A reinforced concrete approach ramp

will lead to the concrete bridge deck. Steel cable guard rails will be installed on both sides of the bridge.

A number of alternatives were considered, but were rejected. One alternative evaluated was a foundation system consisting of cast-in-place concrete in drilled hole piers. Due to the variable water table height and potential caving of the holes requiring casing, this alternative was abandoned. Cast-in-place abutments were not selected due to the extensive excavation, reinforcing and concrete required. Precast concrete beams are more costly than readily available steel beam sections to span Packwood Creek.

2.6 Access Road

An R-value design method was used, with an R-value of 50 selected based on the geotechnical data. Based on a Traffic Index of 5.0, which is conservative based on the low use the road is expected to see, and using the County's design methodology, the gravel equivalent (G.E.) is 0.8 feet. A section of 0.25 feet asphaltic concrete (AC) over 0.5 feet aggregate base (AB) provides a more than adequate G.E. of 1.18 feet. It is recommended that the full section be put down at one time, rather than waiting until completion of construction to place a final lift. The amount of construction traffic is not expected to put significant strain on the full section of pavement, but could damage a 1-1/2 inch lift of AC.

A 12-foot paved width will be provided, with a minimum overall clear width of 20 feet. The connection to County Road 158 will be per Tulare County standards. The contractor will be required to obtain a County encroachment permit. There is no fee for this permit.

2.7 Headgate Structure

Design objectives for the headgate structure are to provide accurate measurement of flows from 0 to 30 cfs, the expected diversion rate for groundwater recharge, and allow for a maximum flow of 125 cfs to fill ponds quickly for stormwater detention. Stormwater layoff volumes would be estimated based on a stage-storage relationship for each basin. Alternatives that allow for a maximum inflow of 250 cfs or 375 cfs for diversion of stormwater were also examined. Design constraints include minor variations in upstream water elevations in the Kaweah River, and a WSEL in the basin that varies from elevation 350 to 358.5. Criteria for selecting an measurement device include accurate measurement under varying upstream and downstream conditions, ease of operation, and cost.

The following alternative designs were developed and evaluated for controlling and measuring flow:

<u>Alternative 1 - Single Gate</u> Flow of water through a single gate (submerged orifice) can be controlled and measured based on the area of the gate opening and measuring the headloss through the gate. Optimal operation of this type of gate is dependent on the relationship between upstream and downstream water surface elevations; therefore, fluctuating levels in the basin would make rating the gate difficult, and reduce the accuracy.

<u>Alternative 2 - Parshall Flume</u> The constricted throat of the flume produces a differential head that can be rated to measure water flow. To control flow into the basin, construction of a gate upstream

of the flume would also be necessary. The flow measurement accuracy would be reduced as the basin fills and the flume becomes submerged. This system would require two separate structures.

Alternative 3 - Weir Weirs measure water flow rate based on the weir geometry and the upstream head. To control flow of water, weirs can be raised or lowered (as done with stop-log weirs). Stop-log weirs (the presumed method here) do not provide the flow control of other methods, since flows over these weirs can only be controlled one log at a time (i.e., 4 inches at a time). Flows would also vary if the upstream WSEL changes.

Alternative 4 - Constant-Head Orifice A constant-head orifice (CHO) is a combination of two submerged orifices (regulating and measuring) that can measure and control flow accurately. There are standard designs for these structures. These structures are used where upstream and downstream WSELs fluctuate. They operate by providing a constant head differential across the orifice.

After review of these alternatives, Alternative 4 - a constant-head orifice (CHO) design was selected because it provides accurate flow measurement with varying upstream and downstream head conditions, and can be incorporated into the headworks, reducing overall cost. Figure 2-4 shows a plan and profile view of the headworks. The CHO provides low headloss, and provides a controlled rate of flow under varying upstream and downstream conditions. The CHO is simple to operate, and accurate in the flow range of 0 to 30 cfs. Two 4.0-foot by 5.0-foot gates would be used. The bottom elevation of the headgate structure is 352 feet (1 foot below the bottom of the Kaweah River) to allow adequate submergence of the orifice. From the headgate structure, an open ditch connects to a 60-inch culvert placed under the perimeter berm. Piping underneath the perimeter berm allows for north-south access along the top of the berm.

When the headgate structure gates are opened to convey 125 cfs, headloss through the two gates is approximately 1.3 feet, and headloss through the culvert is approximately 1.5 feet. The headgate can maintain flows of 125 cfs as long as the WSEL in the basin is more than 2.8 feet below the Kaweah River WSEL. As the basin WSEL rises above this, flows decrease until equilibrium is reached.

To accommodate higher flows of 250 cfs and 375 cfs, additional single gates (4-foot by 5-foot) gates can be added in parallel to the headgate structure - one for each 125 cfs increment. Similarly, additional 60-inch pipes would be added to accommodate higher flows into the basin - a 60-in pipe for each 125 cfs increment.

2.8 Outlet Structure

Design objectives for the outlet structure are to release storm water flows out of the basin. In addition to normal discharge operations, an overflow structure is also proposed. Water would discharge into an overflow outlet should inflow exceed the basin design capacity, or to release rainfall that enters into the basin while the basin is already at its design WSEL.

A schematic of the outlet is shown on Figure 2-5. The lower end of Packwood Creek was selected as the discharge point, due to the proposed phasing of the project. Following the initial construction, the southern end of the site will be the lowest, so an outlet at this location makes the most sense.

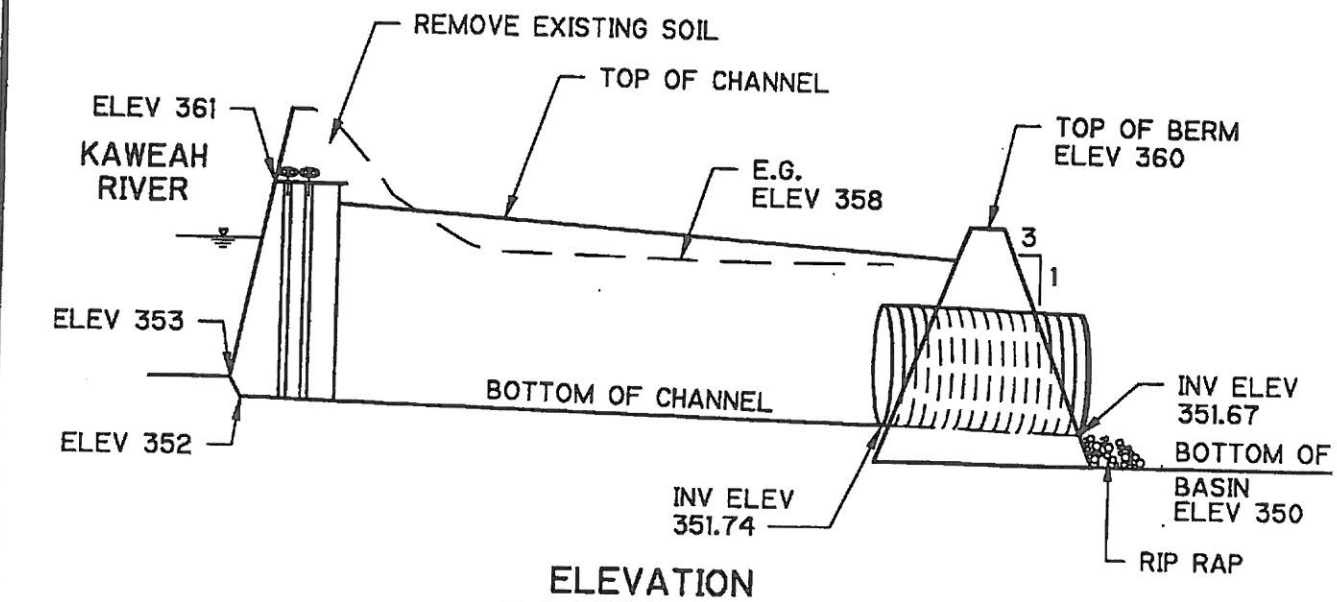

ELEVATION

NTS

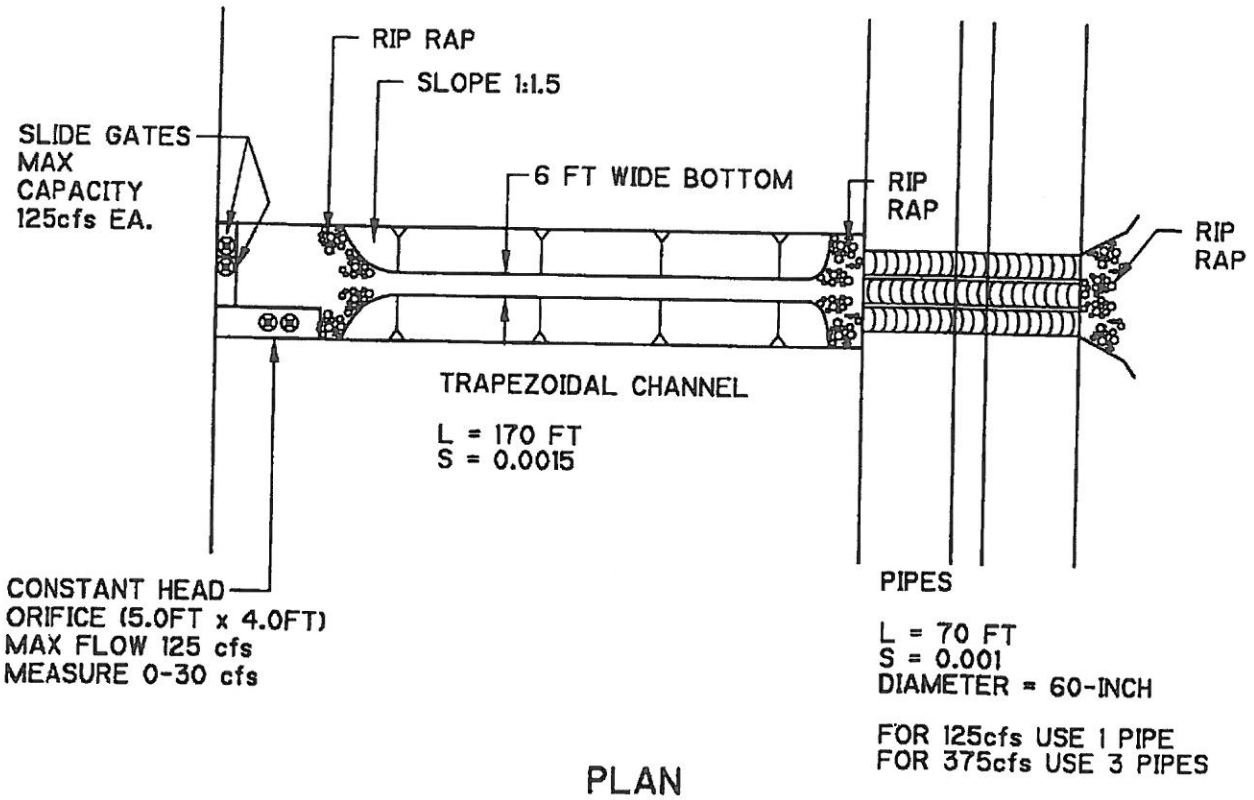

PLAN

NTS

N:\ACAD\8162\14468\Figure\ Fig002-3 04/20/99 09:35 Nguyentv

CDM Camp Dresser & McKee

Figure No. 2-3
Oakes Basin Demonstration Project
Headgate Structure

A schematic of the outlet is shown on Figure 2-5. The lower end of Packwood Creek was selected as the discharge point, due to the proposed phasing of the project. Following the initial construction, the southern end of the site will be the lowest, so an outlet at this location makes the most sense. The volume discharged will be dependent on the level of the creek being discharged to, though most of the water could be discharged if the creek were dry.

A 36-inch diameter culvert, with a manually operated gate, would discharge water from the basin to Packwood Creek. In addition to the culvert, an overflow weir would also be constructed at this location to ensure that any excess water has a controlled release point. Rock protection would be placed in Packwood Creek at the discharge point to dissipate excess energy and prevent erosion.

Flow through the 36-inch discharge line was determined for two different conditions; Packwood Creek empty (inlet control condition), and water elevation in Packwood Creek at 352.0 feet (submerged outlet condition). Table 2-5 lists the flow out of the basin for different water surface elevations under each scenario.

Table 2-5
Discharges out of basin

Basin Water Surface Elev. (feet)	Packwood Creek Empty (cfs)	Packwood Creek Water Surface Elevation 352.0 feet (cfs)
358	102	86
356	87	60
354	68	35
352	44	No flow

A 48-inch diameter standpipe provides overflow control. The standpipe utilizes the 36-inch diameter discharge pipe. The advantages over an overland release include: 1) reduced construction costs by avoiding the need to have a separate outfall, and 2) simplified design of the berm/maintenance road.

In the future, the District may wish to consider installation of a second outlet into Mill Creek. The advantage to discharging to Mill Creek is that water diverted for storm water detention would need to be purchased if not returned to downstream water rights holders. In all likelihood, the downstream water rights holders would be those along Mill Creek.

In addition to or in-lieu of a second outlet, a future pump station may be placed to assist in vacating the basin. The pump would discharge into the Kaweah River, where it could be directed to either Packwood Creek, Mill Creek, or Oakes Ditch. The advantage of a pump is that it can operate independent of the WSELs in the Kaweah River. The pump(s) would be electrically driven, with a capacity in the range of 5-40 cubic feet per second (cfs). Electrical power would need to be provided to the site.

Although these facilities are shown on Figure 2-1, they will not be included in the plans and specifications, since their funding and specific requirements are currently uncertain.

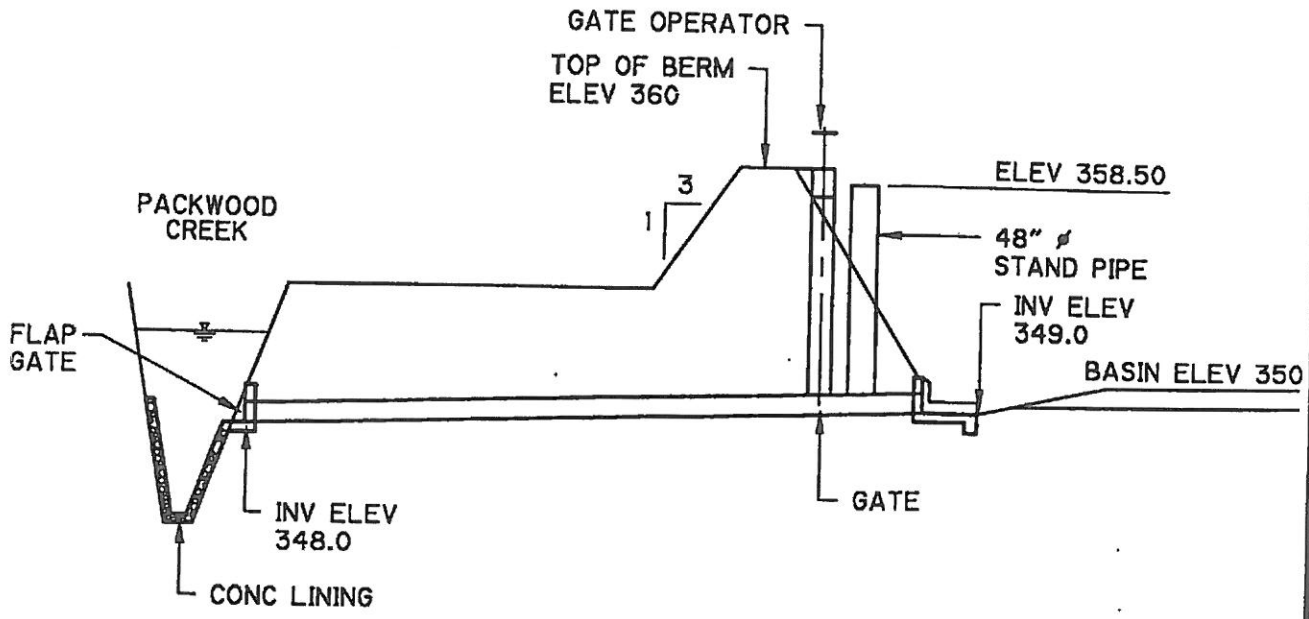

ELEVATION

NTS

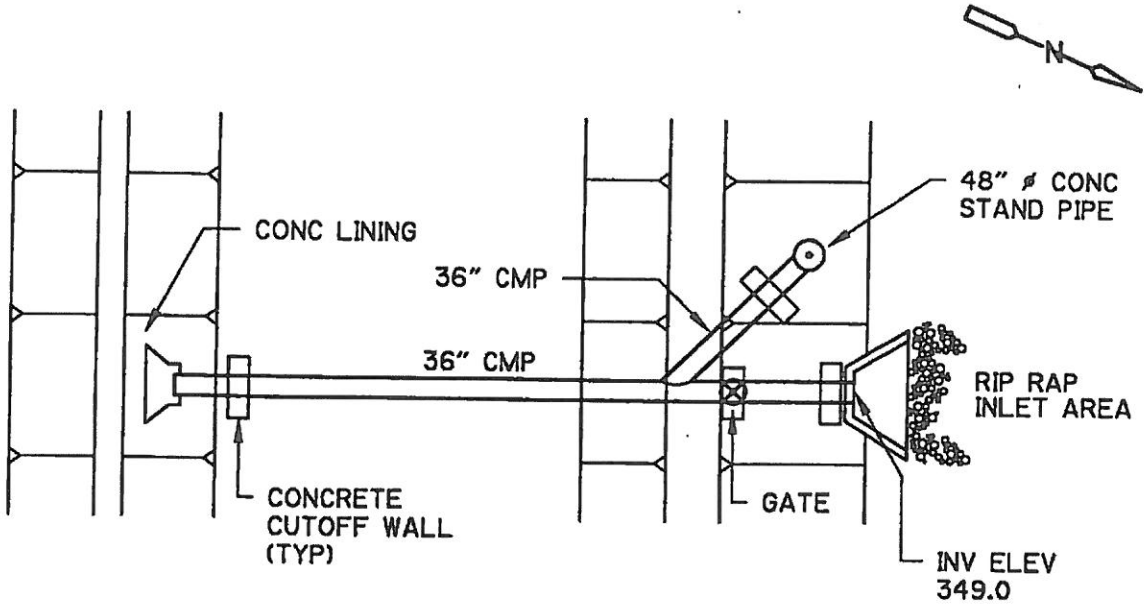

PLAN

NTS

N:\ACAD\8162\14468\Figure\ Fig002-4 04/20/99 09:38 Nguyenty

CDM Camp Dresser & McKee

Figure No. 2-4
Oakes Basin Demonstration Project
Outlet Structure

2.9 Habitat Restoration

The demonstration project has a future provision for restoration of portions of the site to provide habitat similar to the remnant valley oak habitat located along the Kaweah River. This section summarizes the proposed restoration design, developed by CDM's subconsultant H.T. Harvey and Associates. H.T. Harvey's report is included as Appendix B.

Location and Conceptual Design of Restoration Areas

Two areas are proposed for habitat restoration:

- A 100-foot wide area around the perimeter of the recharge basins; and
- Along an interior terrace of the northern basin.

Areas proposed for restoration are shown on Figure 2-1.

Perimeter Restoration Area

Valley oak dominated riparian habitat would be restored throughout an approximately 100-foot wide area around the perimeter of the two recharge basins. This restoration area is positioned between the outboard toe of the recharge basin berm and the top-of-bank along Packwood and Mill Creeks and along both sides of Oakes Ditch. A 12-foot wide earthen access road is also planned along Packwood and Mill Creeks and along both sides of Oakes Ditch.

The productivity of riparian vegetation would likely be higher along the top-of-bank due to higher soil moisture levels in the root zone. Vegetation immediately adjacent to the creek enhances the aquatic habitat value significantly, providing shading and detritus for the aquatic food chain. This enhances value for many of the wildlife species associated with the riparian forest.

Riparian Habitat Restoration Terrace

Valley oak are adapted to flooding during the rainy season and historically valley oak riparian forest flourished in the flood prone Kaweah River Delta. In an effort to restore valley oak riparian habitat in a flood prone area, a riparian habitat restoration terrace (terrace) will be constructed along the inside of the northern recharge basin berm. The terrace will be approximately 500 feet long and 20 feet wide. To minimize reductions in the water storage volume of the recharge basin, the surface area of the terrace was restricted to a small portion of the recharge basin. The terrace was positioned in the northeastern portion of the northern basin to improve the habitat values associated with riparian habitat restoration along Mill Creek. Mill Creek was chosen over Packwood Creek because it generally has flow longer in the season.

The terrace would flood periodically between November and March 30, primarily during wet years when the recharge basin is utilized for flood detention and groundwater recharge. To ensure the survival of riparian vegetation, the terrace should generally not be inundated from approximately April 1 through October 1. For groundwater recharge events where the flooding duration will range from approximately 2 weeks to 2 months, the inundation depth across the terrace should generally not exceed 2 feet, whenever possible. The flooding depth on the terrace could exceed 2

feet for stormwater detention events where the flooding duration will be considerably shorter (approximately 24 hours).

Restoration of riparian habitat on the terrace will have the following benefits:

- Potential for development of highly productive riparian habitat due to greater water availability in soils.
- Over time the canopy of trees planted on the inboard and outboard side of the berm should overlap to form a continuous tree canopy over the berm.
- Periodic flooding will promote natural recruitment of native riparian species and consequently shorten the time for development of mature riparian habitat.

Restoration Area Topsoil

During construction of the interim project, top soil in the area south of Oakes Ditch was harvested and used to construct the temporary berms. Soil samples collected from the site in undisturbed areas and berms indicate that soils are suitable for riparian habitat establishment. Soil samples collected from areas where topsoils were stripped had marginal fertility for riparian habitat establishment.

Since topsoil has been removed from the majority of the restoration area south of Oakes Ditch, topsoil stockpiled in the existing berms should be respread to a minimum depth of 12 inches throughout the entire riparian restoration area south of the existing Oakes Ditch. The backfilled soil surface should be contour-graded using tracked equipment to yield a smooth relatively flat surface. Care should be taken during grading of the backfilled topsoils to minimize compaction. Low compaction grading methods should be utilized to ensure that post-grading compaction is 85% or less. No amendments or topsoil addition should be required north of the Oakes Ditch where existing topsoils have not been stripped.

Planting Selection and Plan

Plant species selection was based on the woody species composition along Packwood and Mill Creeks, the woody species composition in existing remnant stands of riparian habitat within the Kaweah River Preserve (Griggs 1983) and on the restoration area hydrology. Table 2-6 presents the plant installation specifications and Figure 2-6 provides a typical plan view of the planting mosaic. In an effort to lower habitat restoration costs, the shrub plantings were limited to approximately 20 percent of the restoration area, primarily near the top-of-bank along Packwood and Mill Creeks.

LEGEND

1. Original grade in areas stripped of topsoil
2. Minimum 18" deep layer of respread native topsoil harvested from existing berms
3. Auger planting hole
   hole diameter = 2 feet
   hole depth = 1X container depth
   scarify sides and bottom of hole
4. Installed seedling tree or shrub
5. Tree shelter (3-1/4" to 4-1/4" diameter by 4' height)
   Bury base 2" into topsoil
6. Protective wire cover
7. Metal t-post (5.5' long), drive t-post approximately 1.5' into ground and fasten tree shelter to post with ratchet-lock ties
8. Irrigation basin (min 3' dia.)
9. Basin berm min 4" wide at top and 4" above basin grade
10. Wood chip layer (min 3" depth)

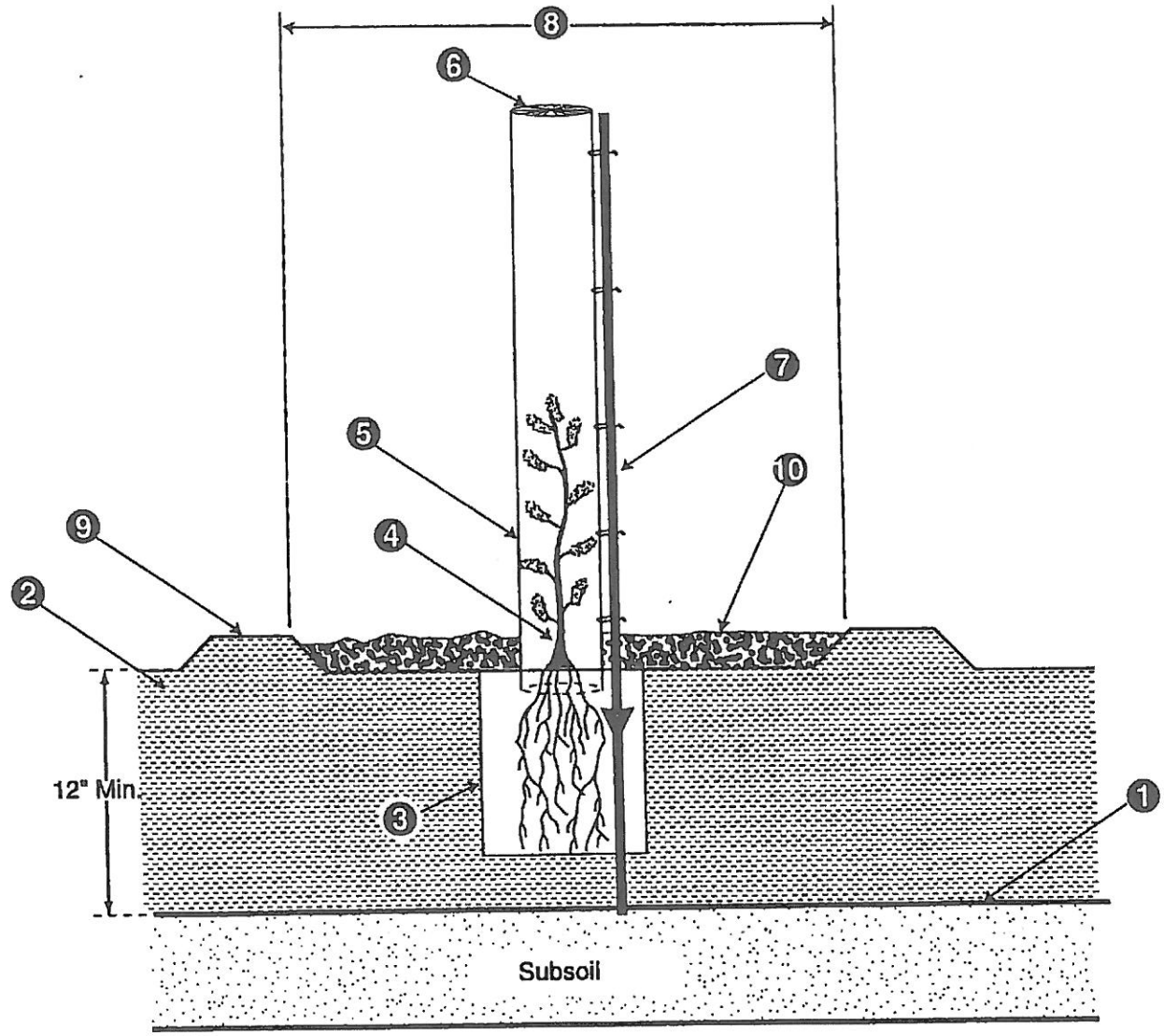

H.T. HARVEY & ASSOCIATES
ECOLOGICAL CONSULTANTS

Oakes Basin Demonstration Project:
Container Stock Installation

File No. 1262-01	Date 4/7/99	Figure 2-7

February. The plant establishment period and associated site maintenance would be extended if significant plant replacement is required due to low plant survivorship and funding could be provided.

Photodegradable tree shelters (shelter height = 4 feet) would be installed for the valley oak plantings to increase soil moisture in the vicinity of the oak plantings and reduce potential animal damage. No plant protection is proposed for the other species to be planted.

Two irrigation methods were evaluated: a bubbler irrigation system; and truck watering. A bubbler irrigation system is preferred because of lower cost and higher plant survival. However, the District would need to arrange to provide a source of water, since there is no active well on the property, and river water would not be available at all times of the year.

Weeds would need to be controlled within the riparian restoration area, using a combination of wood mulch, hand weeding and herbicides immediately around the plantings, and controlling weeds throughout the site to maximum height of 1 foot year round.

Dead plants would be replaced by the landscape contractor during the 3-year maintenance period if plant survival falls below 70 percent.

3. General Design Criteria

This section presents the general design criteria for the design of the Oakes Basin Demonstration Project.

3.1 Structural Design Criteria

Applicable Codes and Standards

The applicable codes and standards used to develop the structural design criteria are listed in Table 3-1.

Table 3-1 ***Codes & Standards*** ***Structural Design Criteria***
Uniform Building Code, 1997.
Code of Federal Regulations, 24 CFR Part 1910, Occupational Safety and Health Standards.
ACI 350R-89 Environmental Engineering Concrete Structures.
ACI 318-95 Building Code Requirements for Reinforced Concrete.
AISC 9th Edition, Manual of Steel Construction, Allowable Stress Design.
ICBO ES Reports for specific products.

Structural Materials

Structural material specifications are summarized in Table 3-2.

Table 3-2   ***Structural Material***
Concrete[1]   Class A Concrete: f'c = 2,500 psi for concrete fill, duct encasement, and where noted.   Class B Concrete: f'c = 3,000 psi where noted (misc. site civil structures).   Class D Concrete: f'c = 4,000 psi for all structural concrete, unless otherwise noted.   1 inch nominal maximum aggregate size (maximum for design).   Reinforcing Steel: ASTM A615 Grade 60.
Structural Steel[2]   Structural shapes, plates and bars: ASTM A36.   Structural steel tubes: ASTM A500, Grade B.   High-strength steel bolts will have a minimum diameter of ⅝ inch and conform to the requirements of ASTM A325.   Embedded anchor bolts will have a minimum diameter of ¾ inch and conform to the requirements of ASTM A307.   Where stainless steel is required, Type 304 stainless steel will be used unless specific justification is provided for the use of Type 316 stainless steel.   All welding will be designed for E70XX electrodes.
Aluminum[3]
Alloy 6061-T6 for structural shapes and plates.   Alloy 6063-T6 for extruded aluminum pipe.
Fasteners for aluminum connections will be Type 304 stainless steel unless otherwise approved.

(1) All concrete materials will conform to the requirements of Chapter 19 of the UBC.
(2) Materials for structural steel will conform to the requirements of Chapter 22 of the UBC.
(3) Aluminum materials will conform to the requirements of Chapter 20 of the UBC.

Design Loads

Design loads for each structure will be in accordance with the applicable codes previously presented. The criteria presented in Table 3-3 are a partial summary of the requirements.

Table 3-3
General Design Loads
Design Criteria

Dead Loads		
Dead loads will consist of the weight of the structure and all equipment of a permanent or semi-permanent nature.		
Live Loads		
Use or Occupancy	Uniform Load (psf)	Concentrated Load (lbs)
Unrestricted Vehicular Areas, AASHTO HS-20	300	16,000
Wind Loads		
Basic Wind Speed – 70 mph		
Exposure Coefficient – C		
Importance Factor – 1.15		
Seismic Loads		
All the District facilities will be designed in accordance with the UBC Chapter 16, Division IV.		
Site-specific recommendations for earthquake-related geotechnical considerations are presented in the Geotechnical Design Criteria section of this report.		
Impact Loads		
Impact forces due to moving vehicular wheel loads - AASHTO Standard Specification for highway bridges.		
Liquid Loads		
The maximum fluid level will be considered to the top of an open containment or to the maximum level possible due to overflow.		
Loading Combinations[1]		
A one third increase in allowable stress(or 0.75 load factor reduction) and elimination of the live load may be considered in short unusual loading conditions as follows: • For maximum groundwater flood elevations where normal/design groundwater is separately analyzed at basic allowable stress.		

[1] Loading combinations will conform to the requirements of chapters 16, 18, 19, 21, and 22 of the UBC.

General Design Considerations

General structural design considerations, including deflection limitations, stability, and concrete anchor requirements, are presented in Table 3-4.

Table 3-4 ***General Structural Considerations*** ***Design Criteria***	
Deflection Limitations	**Maximum Deflection**
General deflection	
Bridge- Steel	L/360
Bridge- Concrete	Refer to ACI 318
Stability	
A safety factor of 2.0 will be provided against sliding and 1.5 against overturning for isolated retaining walls or basins with unbalanced loads under normal loading conditions.	
Resistance to hydrostatic uplift may be provided by dead weight (concrete structure and soil directly above footings) using the following factors of safety against flotation: • 1.50 at observed or design groundwater levels. • 1.25 at maximum design flood elevation (100-year flood).	
Concrete Anchors	
The design of anchor bolts and headed anchor studs will be in accordance with the UBC Section 1925.2. Whenever possible, the designer will assume special inspection is not provided when determining allowable anchor loads.	

3.2 Geotechnical Design Criteria

General information used to develop soil loads is shown in Table 3-5.

Table 3-5 ***General Geotechnical Design Parameters for Oakes Basin Demonstration Project***	
Design Parameter	Value
Soil Profile Type	S_D
Allowable bearing pressure (psf) D+L/D+L+E	2,000/2,667
Total Settlement	1"
Differential Settlement	1/2"
Groundwater Level - feet MSL[5]	345
Ultimate Friction coefficient – Concrete to Engineered Fill	0.35
Peak horizontal ground acceleration[1]	0.2g
Lateral soil pressures[2][4] ■ Active Drained/Undrained(pcf) ■ At-rest Drained/Undrained(pcf) ■ Ultimate Passive (pcf)[3][6] ■ Dynamic (plf)	 35/80 60/90 300 $10*H^2$
Limiting passive pressure (psf)[2] - > 5 feet	 2000

(1) At Period (T) equal to zero.
(2) For level backfill. Refer to Preliminary Geotechnical Engineering Study, Oakes Basin Demonstration Project Site (Fugro West, 1998) for sloping backfills.
(3) May be combined with friction to resist sliding.
(4) Use a Factor of Safety of 1.5 for overturning and 2.0 for sliding
(5) Value represents historic high groundwater elevation. Refer to Hydrogeologic Evaluation, Oakes Basin Demonstration Project Site, dated June 11, 1999. Technical memorandum prepared by Fugro West.
(6) A 1.5 Factor of Safety for sliding may be used if passive pressure is neglected.
(7) Dynamic force acts at 0.6H from the bottom of the wall.

3.3 Civil Design Criteria

Codes and Standards

Applicable codes and standards are summarized in Table 3-6.

Table 3-6 ***Codes & Standards*** ***Civil Design Criteria***
U.S. Army Corps of Engineers "Design and Construction of Levees (EM-1110-2-1913)". (used as design guideline for earthern berms)
State of California, Department of Transportation (CalTrans) "Standard Plans" and "Standard Specifications", July 1995.
Improvement Standards of Tulare County, 1991.
U.S. Bureau of Reclamation Water Measurement Manual.

General Design Considerations

General civil design considerations, including survey datum and coordinate system, earthwork, roadways, and hydraulics are summarized in Table 3-7.

3.4 Habitat Enhancement Design Criteria

The overall objective of the riparian habitat restoration design is to provide for the establishment of self-sustaining riparian habitat similar in plant species composition and structure to existing, relatively undisturbed riparian habitat in the Kaweah River Delta. Valley oak is the dominant riparian species in these remaining remnants of riparian habitat. Table 3-8 summarizes criteria that were used to guide the riparian habitat restoration design:

Table 3-7 ***General Design Considerations*** ***Civil Sitework***
Survey Datum and Coordinate System
A project coordinate system will be set up using northings and eastings. Elevations are based on County of Tulare benchmark 156-296 (Elev. 356.29)
Earthwork[1]
Fill materials, structural backfill and retaining wall backfill: In accordance with Improvement Stands of Tulare County, and CalTrans Standard Specifications Fill Placement: All fill placed within 2 percent optimum moisture content at 90% relative compaction (ASTM D-1557) Gravel Drainage: Class 2 Permeable Material (See CalTrans Section 68-1.025) Grading: ■ Building Areas – Over excavate to 3 feet below footing subgrade to provide uniform shallow foundations support. ■ Percolation Basins – Mix on-site soils to achieve the following characteristics: - Percent passing No. 200 sieve: 40-60 - Liquid limit: 20-40 - Plasticity index: 5-10 - Expansion index: <40 - Cohesion: C=200 psf - 0 = 25 degrees
Roadways
The access road design and construction will be based on the Improvement Standards of Tulare County Pavement subgrade R value >= 15 and EI < 20
Hydraulics
Flow measurement devices and calculations are based on guidelines in the USBR Water Measurement Manual. CMP pipe will be specified, with 10-gage thickness. No corrosivity data was available, though the District Engineer indicated corrosion is not an issue.

(1) The earthwork will be placed in accordance with recommendations in the preliminary geotechnical report (Fugro West, 1998)

Table 3-8 ***Habitat Restoration Design Criteria***
Plant Species
Plant species composition in the restoration area will be similar to that in adjacent valley oak dominated areas.
Topsoil
Topsoil texture, organic matter content, and fertility in the restoration area will be similar to that in adjacent valley oak dominated areas.
Location of Restoration
Riparian habitat restoration areas will be immediately adjacent to Packwood and Mill Creeks, to the extent possible. Flooding of portions of the riparian restoration area should be done to the extent possible and feasible to mimic the natural hydrology of valley oak dominated riparian habitat.

3.5 Contract Documents

Documents for the construction of the Oakes Basin Demonstration Project will consist of drawings and specifications. The specifications include general conditions, provided by the Kaweah Delta Water Conservation District, and technical specifications. The contract documents will show full-buildout of the project. Work that will occur after the initial phase will be labeled and shown as "Not in Contract". The bid structure will be such that logical adjustments to the scope of work can be made based on the bid prices and available funding.

Technical specifications will be prepared using the Construction Specifications Institute (CSI) standard format. Table 3-9 includes a preliminary list of the project specification sections:

Table 3-9
List of Technical Specifications

Section	Description
01010	Summary of Work
01500	General Requirements
01505	Mobilization – Demobilization
02224	Demolition and Re-Use of material
02110	Clearing and Grubbing
02222	Dewatering
02224	Stripping and Excavation
02226	Structure Excavation and Backfill
02270	Embankment
02700	Stone Protection (Riprap)
02932	Drainage Culverts
02932	Erosion Control Seeding
03100	Concrete Formwork
03200	Concrete Reinforcement
03250	Concrete Joints and Accessories
03300	Cast-in-place Concrete
03345	Concrete Finishing
03600	Grout
05311	Steel Deck
05500	Miscellaneous Metalwork
06100	Rough Carpentry
11280	Sluice Gates and Slide Gates

A preliminary list of drawings is shown in Table 3-10.

Table 3-10
List of Drawings

Dwg No.	*Title*	*Description*
Title Sheet	Title Sheet	
G-1	Abbreviations, symbols, and design criteria	
C-1	1"=40' Grading Plan	
C-2	1"=40' Grading Plan	
C-3	1"=40' Grading Plan	
C-4	1"=40' Grading Plan	
C-5	Typical cross sections and grading notes	Access road, keyways, berms, ditches
C-6	Details	Culverts/gates, access ramps
C-7	Details	Outlet structure, misc
S-1	Struct notes, abbrev and legend	
S-2	Access bridge	
S-3	Headgate structure	
S-4	Sections and details	
L-1	Landscaping notes, abbrev, and legend	
L-2	Landscaping plan	
L-3	Landscaping schedule and details	

4. Project Implementation

This section discusses possible construction phasing, and presents a preliminary cost estimate.

4.1 Phase I

Work in the Phase I of the construction is limited by available funding. Based on the estimated construction costs, the following elements are expected to be fully or partially constructed as part of the first phase:

- Access bridge.
- Headgate structure.
- Outlet structure.
- Seepage control at Packwood Creek and eastern boundary.
- Culvert crossing at Oakes Ditch.
- All or part of the berm around southern basin.
- Respread of topsoil in enhancement corridor south of Oakes Ditch.

The cost of completing all of these improvements (see Section 4.3) is estimated at $300,000 (w/ contingencies), which exceeds the funding currently available. The recommendation is to bid these project components, and then adjust the amount of the berm placed, and/or the amount of low permeability layer placed along Packwood Creek to match the funding. Options that would be considered include: 1) initially building the berm to a reduced height; 2) building only the southernmost section of the berm and connecting to the existing berms which form the interim

basin just south of Oakes Ditch; and, 3) only placing the low permeability layer at identified trouble spots along Packwood Creek.

From a logistical perspective, sequencing of the earthwork is an important element. Low permeability materials must be exposed and excavated for use in the low permeability layer, suitable materials must be incorporated into the perimeter berms, and topsoil must be stockpiled and re-spread in the habitat enhancement corridor. Backfilling of areas below elevation 350 must also occur. While a construction contractor would likely develop their own sequencing plan, Figure 4-1 presents a methodology that demonstrates how the sequencing could be done in a fairly efficient manner.

4.2 Phase II

Following the first phase of work, the major infrastructure would be in place. The remaining work would involve:

- Completion of the habitat enhancement element.
- Excavating the southern basin to final grade and completing the south berm and low permeability layer along Packwood Creek, if necessary.
- Constructing the north basin, including placing the perimeter berm and excavating to final grade.
- Possible pump station.
- Possible second outlet to Mill Creek.

Following the first year of construction, sandy material would be mined from the southern basin and eventually the northern basin. Mining operations would continue at a slow rate (3-5 trucks per day over the next 10-12 years). It is envisioned that the District would enter into agreement with the mining company to construct the north basin berm, and undertake other measures to improve percolation. Figure 4-2 shows a relational schedule for the phasing.

Habitat enhancement work would depend on additional funding. The estimated construction cost (including three years maintenance) varies from $18,000/acre (irrigation system) to $43,000/acre (truck watering). Approximately 12 acres have been identified as potential habitat enhancement area.

Construction of a pump station or a second outlet to Mill Creek would be contingent on an agency funding these improvements. Cost estimates were not developed for these facilities.

4.3 Preliminary Cost Estimate

A preliminary construction cost estimate for the first phase of work is presented in Table 4-1. More detailed costs are included in Appendix A.

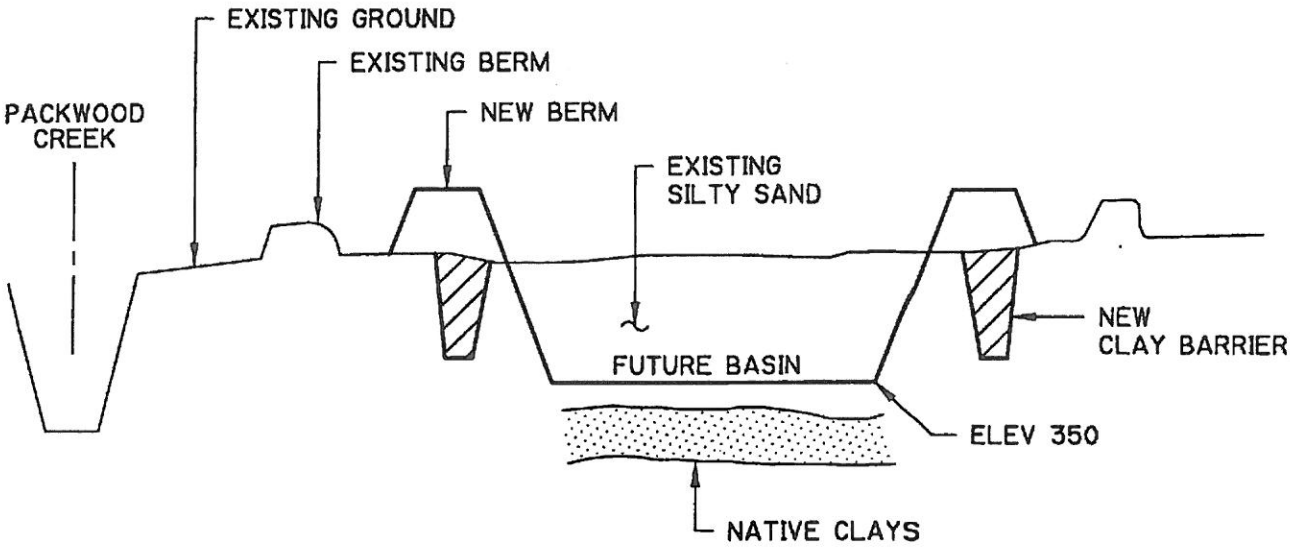

RECOMMENDED SEQUENCE OF WORK

1. BEGIN EXCAVATION OF CLAY BARRIER, REUSE MATERIAL FOR PERIMETER BERMS.
2. EXCAVATE SILTY SAND LAYER TO REACH CLAY MATERIAL, REUSE FOR PERIMETER BERMS OR STOCKPILE.
3. EXCAVATE CLAY MATERIAL AND REUSE FOR CLAY BARRIER.
4. BACKFILL BELOW ELEV 350 W/ STOCKPILE MATERIAL.
5. ADDITIONAL EXCAVATION TO COMPLETE PERIMETER BERMS.
6. SPREAD EXIST BERMS (MOSTLY TOPSOIL) IN ENHANCEMENT AREA.

N:\ACAD\8162\14468\Figure\ Fig004-1 04/20/99 09:43 Nguyentv

CDM Camp Dresser & McKee

Figure No. 4-1
Oakes Basin Demonstration Project
Sequencing of Phase I

Table 4-1 ***Preliminary Construction Cost Estimate***	
Headgate structure 125 cfs - $40,000 250 cfs - $70,000 375 cfs - $100,000	$40,000
Outlet structure	$31,000
Culvert crossing at Oakes Ditch to basin north of Oakes Ditch (part of future phase)	$3,000
Seepage control at Packwood Creek and eastern boundary	$85,000 (1)
Berm around southern basin to elevation 360'	$67,000
Respread of topsoil in enhancement corridor	$10,000
Access bridge	$48,000
Access road	$30,000
Miscellaneous	$10,000
Subtotal	$324,000
15% Contingency	$48,600
Total Estimated Construction Cost	$372,600
Use	$375,000

(1) Rough cost -- will be revised once all site hydrogeology data received and evaluated.

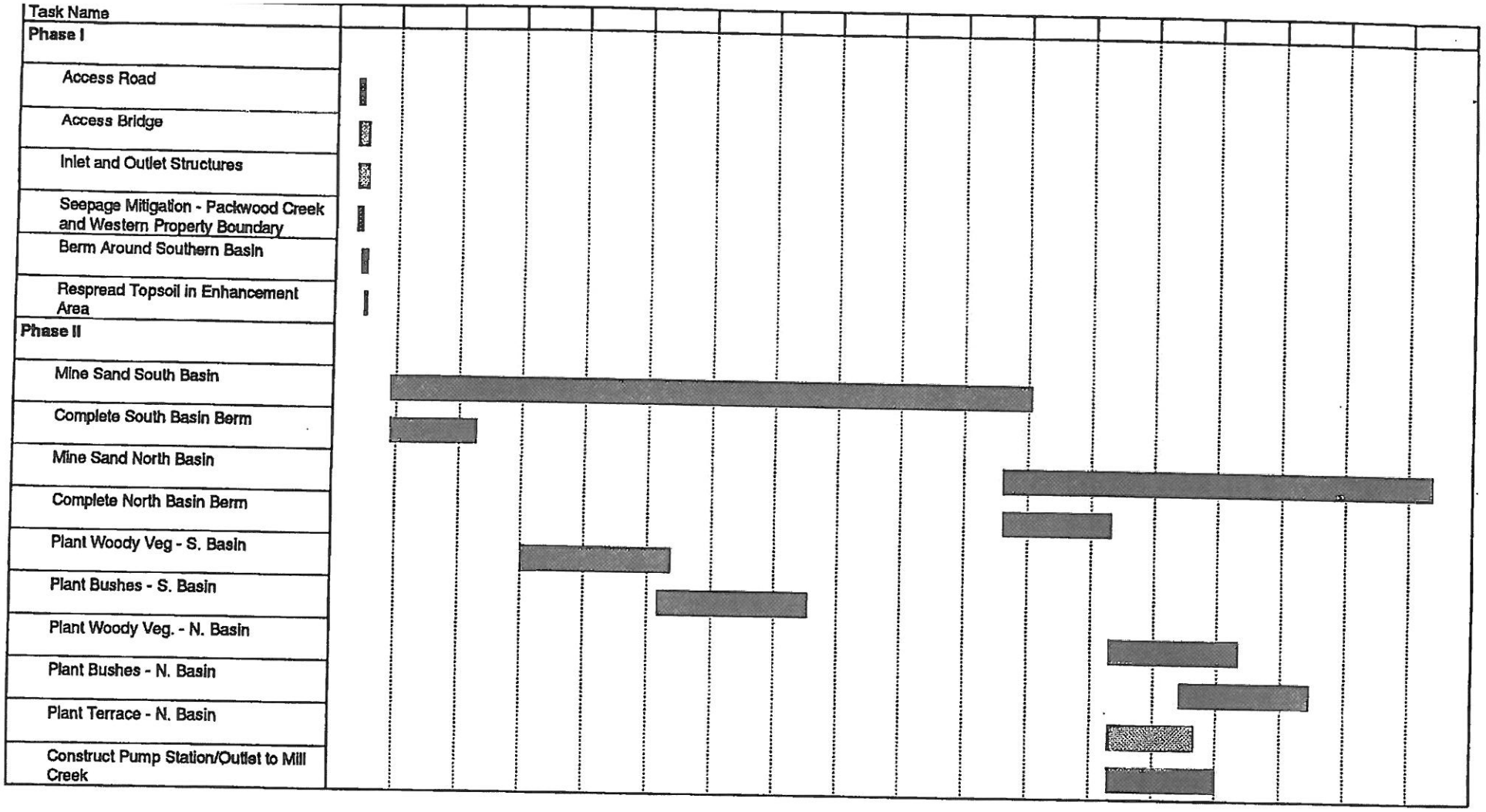

[1] Total estimated time - 12 to 15 years. Timing of work is dependent on available funding and agreement(s) with mining company.

Figure 4-2
Oakes Basin Demonstration Project
Relational Schedule for Construction Work[1]
w99/engineer/boissevian/001.mpp

References

Fugro West, 1998, Hydrogeologic Evaluation, Oakes Ditch Basin Demonstration Project Site.

Fugro West, 1998, Preliminary Geotechnical Engineering Study, Oakes Ditch Basin Demonstration Project Site.

Appendix A
Cost Estimates

Oakes Basin Demonstration Site
Preliminary Construction Cost Estimate
Lateral Seepage Alternatives

Date: 4/16/99
Prepared by: PT

Quantities

Item No.	Item Description	Estimated Quantity	Unit	Unit Price (In Figures)	Amount (In Figures)
	Cutback Packwood Slope				
1	1,700 lf of bank	5000	CY	$4.50	$22,500.00
	Packwood Creek Slope Protection				
1	Excavation	1,000	CY	$4.50	$4,500.00
2	Stone protection	920	TON	$45.00	$41,400.00
	Subtotal				$45,900.00
	New Regulating Weir				
1	Structure	LS	LS	$65,000.00	$65,000.00
	Clay barrier at Packwood				
1	L=1700', W=6', D=8', 1:1 slopes	7,000	CY	$8.00	$56,000.00
	Clay barrier at Packwood				
1	L=900', W=6', D=8', 1:1 slopes	3,600	CY	$8.00	$28,800.00

Oakes Basin Demonstration Site
Preliminary Construction Cost Estimate
Phase I - No Stabilized Fill

Date: 4/20/99
Prepared by: ARR/PT

Quantities

Item No.	Item Description	Estimated Quantity	Unit	Unit Price (In Figures)	Amount (In Figures)
	General Activities				
1	Mobilization - Demobilization	LS	LS	$5,000.00	$5,000.00
2	Demolition	LS	LS	$5,000.00	$5,000.00
	Subtotal				$10,000.00
	Headworks				
	(based on 125 cfs maximum flow)				
3	Excavation	950	CY	$4.50	$4,275.00
4	Structure backfill	15	CY	$25.00	$375.00
5	Reinforced concrete	25	CY	$600.00	$15,000.00
6	60-inch CMP	70	LF	$100.00	$7,000.00
7	Stone protection	50	TON	$50.00	$2,500.00
8	48-in slide gates w/ manual operator	2	EA	$4,000.00	$8,000.00
9	Stilling wells	LS	LS	$2,500.00	$2,500.00
	Subtotal				$39,650.00
	For additional 125 cfs - 250 total (X 1.75)				($69,387.50)
	For additional 250 cfs - 375 total (X 2.5)				($99,125.00)
	Outlet				
10	36-in CMP	210	LF	$50.00	$10,500.00
11	48-in diameter standpipe	LS	LS	$2,000.00	$2,000.00
12	Stone protection	13	TON	$50.00	$650.00
13	Concrete inlet structure	LS	LS	$4,000.00	$4,000.00
14	Concrete outlet structure w/ flap gate	LS	LS	$8,000.00	$8,000.00
15	36-in riser w/ control gate	LS	LS	$6,000.00	$6,000.00
	Subtotal				$31,150.00
	South Berm				
16	Respreading existing south berm	10,000	CY	$1.00	$10,000.00
17	Berm	12,600	CY	$4.50	$56,700.00
18	Clay Barrier	10,600	CY	$8.00	$84,800.00
19	Hydroseed Slopes	4	Acre	$2,500.00	$10,000.00
	Subtotal				$161,500.00
	Access Road				
20	Asphalt concrete	225	TON	$60.00	$13,500.00
21	Agregate base	490	TON	$30.00	$14,700.00
	Subtotal				$28,200.00
	Basin Connection				
22	Culvert	LS	LS	$3,000.00	$3,000.00
	Access Bridge				
23	Bridge	LS	LS	$47,570.00	$47,570.00
	Subtotal for all items				$321,070.00
	15% Contingency				$48,160.50
	Total - Phase I				$369,230.50

Printed on 4/20/99
CDM

Oakes Basin Demonstration Site
Preliminary Construction Cost Estimate
Phase I - Includes Stabilized Fill

Date: 4/20/99
Prepared by: ARR/PT

Quantities

Item No.	Item Description	Estimated Quantity	Unit	Unit Price (In Figures)	Amount (In Figures)
	General Activities				
1	Mobilization - Demobilization	LS	LS	$5,000.00	$5,000.00
2	Demolition	LS	LS	$5,000.00	$5,000.00
	Subtotal				$10,000.00
	Headworks				
	(based on 125 cfs maximum flow)				
3	Excavation	950	CY	$4.50	$4,275.00
4	Structure backfill	15	CY	$25.00	$375.00
5	Reinforced concrete	25	CY	$600.00	$15,000.00
6	60-inch CMP	70	LF	$100.00	$7,000.00
7	Stone protection	50	TON	$50.00	$2,500.00
8	48-in slide gates w/ manual operator	2	EA	$4,000.00	$8,000.00
9	Stilling wells	LS	LS	$2,500.00	$2,500.00
	Subtotal				$39,650.00
	For additional 125 cfs - 250 total (X 1.75)				($69,387.50)
	For additional 250 cfs - 375 total (X 2.5)				($99,125.00)
	Outlet				
10	36-in CMP	210	LF	$50.00	$10,500.00
11	48-in diameter standpipe	LS	LS	$2,000.00	$2,000.00
12	Stone protection	13	TON	$50.00	$650.00
13	Concrete inlet structure	LS	LS	$4,000.00	$4,000.00
14	Concrete outlet structure w/ flap gate	LS	LS	$8,000.00	$8,000.00
15	36-in riser w/ control gate	LS	LS	$6,000.00	$6,000.00
	Subtotal				$31,150.00
	South Berm				
16	Respreading existing south berm	10,000	CY	$1.00	$10,000.00
17	Berm	12,600	CY	$4.50	$56,700.00
18	Stabilized Fill (excavation)	16,000	CY	$8.00	$128,000.00
19	Hydroseed Slopes	4	Acre	$2,500.00	$10,000.00
	Subtotal				$204,700.00
	Access Road				
20	Asphalt concrete	225	TON	$60.00	$13,500.00
21	Agregate base	490	TON	$30.00	$14,700.00
	Subtotal				$28,200.00
	Basin Connection				
22	Culvert	LS	LS	$3,000.00	$3,000.00
	Access Bridge				
23	Bridge	LS	LS	$47,570.00	$47,570.00
	Subtotal for all Items				$364,270.00
	15% Contingency				$54,640.50
	Total - Phase I				$418,910.50