NIPOMO COMMUNITY SERVICES DISTRICT

Construction Plans for

WATERLINE INTERTIE PROJECT

Bid Package 3

Blosser Road Water Main and Flow Meter

July 2010

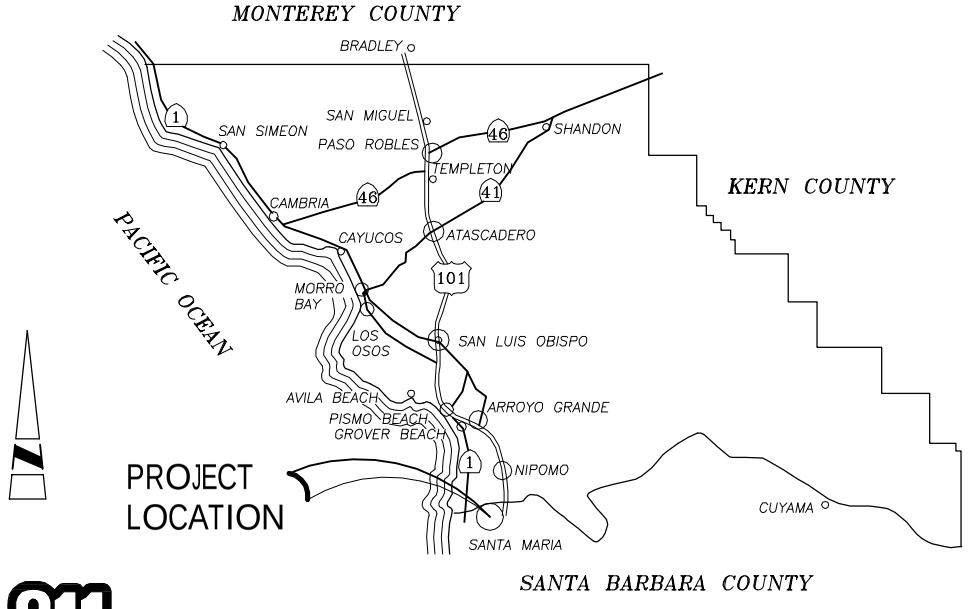

VICINITY MAP

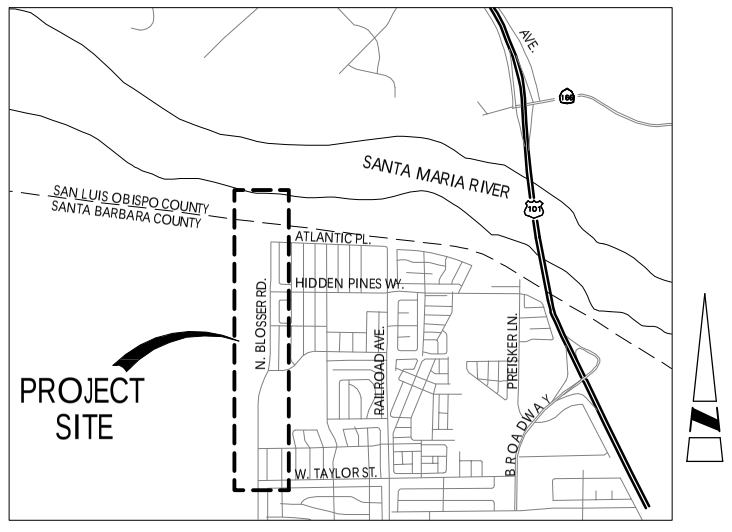

LOCATION MAP

Know what's **below.** **Call** before you dig.

Sheet Index

DWG. NO.	SHEET TITLE	DESCRIPTION
1	G-001	TITLE SHEET
2	G-002	SHEET INDEX, LEGEND, ABBREVIATIONS & GENERAL NOTES
3	G-003	SURVEY CONTROL DATA
4	C-101	PLAN & PROFILE - STA. 1+00 to 5+00
5	C-102	PLAN & PROFILE - STA. 5+00 to 9+50
6	C-103	PLAN & PROFILE - STA. 9+50 to 14+00
7	C-104	PLAN & PROFILE - STA. 14+00 to 18+50
8	C-105	PLAN & PROFILE - STA. 18+50 to 23+00
9	C-106	PLAN & PROFILE - STA. 23+00 to 27+50
10	C-107	PLAN & PROFILE - STA. 27+50 to 32+00
11	C-108	PLAN & PROFILE - STA. 32+00 to 36+50
12	C-109	PLAN & PROFILE - STA. 36+50 to 41+00
13	C-110	PLAN & PROFILE - STA. 41+00 to 45+50
14	C-111	PLAN & PROFILE - STA. 45+50 to 50+00
15	C-112	LEVEE JACK AND BORE - PLAN & PROFILE-STA. 50+00 to 54+50
16	C-113	LEVEE BORE & JACK - PLAN & PROFILE-STA. 54+50 to 59+00
17	C-114	LEVEE BORE & JACK - PLAN & PROFILE-STA. 59+00 to 62+00
18	C-401	FLOW CONTROL AND METERING STATION VAULTS
19	C-402	FLOW CONTROL AND METERING STATION VAULTS SECTIONS
20	C-403	PIG LAUNCHER SITE PLAN
21	C-404	ENLARGE PLAN VIEW - 72" STORM DRAIN CROSSING
22	C-501	BLOSSER ROAD PIPELINE DETAILS - 1
23	C-502	BLOSSER ROAD PIPELINE DETAILS - 2
24	C-503	BLOSSER ROAD PIPELINE DETAILS - 3
25	C-504	BLOSSER ROAD PIPELINE DETAILS - 4
26	E-101	FLOW METERING STATION ELECTRICAL PLANS
27	E-102	FLOW METERING STATION SINGLE LINE DIAGRAM & ELECTRICAL DETAILS
28	N-001	INSTRUMENTATION LEGEND AND SYMBOLS
29	N-101	COMMUNICATION BLOCK DIAGRAM
30	N-102	INLET FLOW CONTROL P&ID
31	N-103	METERING PANEL LAYOUT AND METERING PANEL INTRUSION P&ID
32	N-501	INSTRUMENT DETAILS
33	N-502	ANTENNA MOUNTING DETAILS

REGISTERED PROFESSIONAL ENGINEER — JOSHUA D. REYNOLDS — No. 65400 — Exp. 9/30/11 — CIVIL — STATE OF CALIFORNIA

AECOM

PROJECT: WATERLINE INTERTIE PROJECT

CLIENT: NIPOMO COMMUNITY SERVICES DISTRICT

APPROVED BY:

DON SPAGNOLO, P.E. GENERAL MANAGER — DATE

PETER SEVCIK, P.E. DISTRICT ENGINEER — DATE

PROJECT MANAGER: MICHAEL NUNLEY, PE — DATE: 07/2010

ENGINEER OF RECORD: JOSHUA REYNOLDS, PE — DATE: 07/2010

ACCOUNT NUMBER: 60061295 — FILE NUMBER

SHEET NUMBER: 1 OF 33 SHEETS

AECOM USA, Inc.
1194 Pacific Street, Suite 204
San Luis Obispo, California 93401
T 805.542.9840 F 805.542.9990
www.aecom.com

DWG: W:\Nipomo CSD (19996)\19996.70 Waterline Intertie Project Design\Design Plans\CAD\Plansets\BP-3_BLOSSER ROAD\1005 Planset\G-001.dwg Layout Name: G-001 - Plotted by: Froelicher, Jim Date: 7/28/2010 - 4:54 PM
XREFS: VicinityMap IMAGES: Nipomo logo.jpg - LocationMap.png - NipomoMap.png -

PIPELINE GENERAL NOTES

1. STATIONING AND DISTANCES SHOWN ON THE DRAWINGS ARE BASED ON HORIZONTAL MEASUREMENTS PROJECTED FROM THE PIPE CENTERLINE UNLESS NOTED OTHERWISE.
2. STRUCTURAL CONCRETE SHALL BE CLASS "A" 4000 PSI, UNLESS INDICATED OTHERWISE. SEE SPECIFICATION SECTION 030500.
3. VERIFY DIMENSIONS AND CONDITIONS AT THE SITE BEFORE STARTING WORK. ANY CONFLICTS BETWEEN DETAILS OR DIMENSIONS ON THE DRAWINGS SHALL BE REPORTED PROMPTLY TO THE OWNER'S REPRESENTATIVE WHO WILL DETERMINE THE INTENT OF THE DRAWINGS.
4. UTILITIES, BOTH EXISTING AND THOSE NOTED AS FUTURE WHICH MAY OR MAY NOT EXIST AT THE TIME OF CONSTRUCTION, ARE SHOWN ON THESE PLANS FOR THE CONVENIENCE OF THE CONTRACTOR. SUBSURFACE UTILITY DATA ARE DEPICTED TO LEVEL D AS DEFINED IN "STANDARD GUIDELINE FOR THE COLLECTION AND DEPICTION OF EXISTING SUBSURFACE UTILITY DATA"; CI/ASCE 38-02. EXISTING UTILITY SERVICE LATERALS ARE SPECIFICALLY NOT SHOWN ON THESE PLANS.
5. TAKE PRECAUTIONARY MEASURES TO PROTECT UTILITIES AND STRUCTURES SHOWN AS WELL AS ANY AND ALL OTHERS NOT OF RECORD OR NOT SHOWN ON THESE PLANS. ALL SUCH IMPROVEMENTS OR STRUCTURES DAMAGED BY THE CONTRACTOR'S OPERATIONS SHALL BE REPAIRED OR RECONSTRUCTED TO ORIGINAL DESIGN CONDITION AND/OR THE APPLICABLE REQUIREMENTS OF THE AFFECTED UTILITY AT THE CONTRACTOR'S EXPENSE. APPROVAL BY NCSD SHALL ALSO BE REQUIRED.
6. COORDINATE UNDERGROUND UTILITY MARKING WITH THE LOCAL UNDERGROUND SERVICE ALERT JURISDICTION (CALL 811) PRIOR TO CONSTRUCTION. ALERT NCSD (CALL (805) 929-1133) PRIOR TO CONSTRUCTION OR GROUND DISTURBANCE.
7. USE EXTREME CAUTION WHEN WORKING NEAR OVERHEAD OR UNDERGROUND POWER, GAS, OR OTHER UTILITIES SO AS TO SAFELY PROTECT ALL PERSONNEL AND EQUIPMENT. PROTECT FROM DAMAGE INCURRED DURING CONSTRUCTION ALL OVERHEAD UTILITY LINES WHETHER SHOWN OR NOT SHOWN ON THESE PLANS. NOTIFY UTILITY COMPANIES PRIOR TO ANY WORK IN OVERHEAD LOCATIONS. CONTRACTOR SHALL BE RESPONSIBLE FOR COST INCURRED.
8. PRESERVE ALL SURVEY MARKERS AND MONUMENTATION. THOSE REQUIRING REMOVAL SHALL BE RE-ESTABLISHED IN ACCORDANCE WITH THE LOCAL GOVERNING AUTHORITY.
9. LIMIT CONSTRUCTION ACTIVITIES TO THE RIGHT-OF-WAY AND EASEMENTS AND DESIGNATED AREAS SHOWN ON THE DRAWINGS.
10. COMPACTION OF BACKFILL MATERIALS SHALL BE BY MECHANICAL EQUIPMENT IN ACCORDANCE WITH SPECIFICATION SECTION 312316. NO FLOODING OR JETTING WILL BE ALLOWED.
11. AT THE CLOSE OF EACH WORKING SHIFT, WHERE A NEXT SHIFT WILL NOT IMMEDIATELY FOLLOW, CONSTRUCT PIPE END CAPS AND TRENCH RAMPS AT THE END OF THE EXCAVATION. PREVENT UNAUTHORIZED ENTRY INTO THE OPEN PIPE AND TRENCH. PROVIDE SECURITY FENCING AT ALL TIMES AROUND WORK AREA SEE NOTE 14 BELOW.
12. VERIFY LOCATIONS AND DEPTHS OF EXISTING UTILITIES BEFORE BEGINNING CONSTRUCTION. LOCATIONS SHOWN ON THESE PLANS ARE APPROXIMATE AND FOR GENERAL INFORMATION ONLY.
13. ALL SPECIFICATIONS, DRAWINGS, AND DETAILS INCLUDED IN THE CONTRACT DOCUMENTS SHALL FULLY APPLY TO THE WORK WHETHER SPECIFICALLY REFERENCED OR NOT.
14. INSTALL HIGH-VISIBILITY SAFETY FENCING ("SNOW-TYPE") AND/OR EXCLUSIONARY FENCING AROUND DESIGNATED WORK AREAS AS A WARNING. SAFETY FENCE SHALL HAVE CONTINUOUS REFLECTIVE TAPE ATTACHED AT THE TOP. INSTALL FENCING (TEMPORARY 6-FOOT HIGH CHAIN LINK) AROUND ALL STORAGE AREAS. INSTALL SILT AND/OR EXCLUSIONARY FENCING AS DIRECTED BY OWNER'S BIOLOGIST PER SPECIFICATION SECTION 011100.
15. PROJECT SPECIFIC GEOTECHNICAL INFORMATION IS CONTAINED IN THE FOLLOWING:
    A. GEOTECHNICAL REPORT, NIPOMO-SANTA MARIA INTERTIE, BLOSSER ROAD TO TEFFT STREET, NIPOMO COMMUNITY SERVICES DISTRICT, CA., MARCH 2009, FUGRO WEST INC.
16. GROUND WATER PUMPED FROM EXCAVATION AND JACKING/RECEIVING SHAFTS SHALL NOT BE DISCHARGED TO THE STREET OR SURROUNDING AREA WITHOUT A PERMIT.
17. VIDEO TAPE AND DOCUMENT THE PRE-EXISTING CONDITIONS OF PROPERTIES ADJACENT TO THE PROJECT, AND SUBMIT THE TAPE TO THE DISTRICT PRIOR TO THE START OF CONSTRUCTION. PROTECT ADJACENT PROPERTIES DURING WORK AND REPAIR DAMAGE TO LANDSCAPING, PAVING, IRRIGATION, STRUCTURES, ETC., CAUSED BY THE WORK.
18. UPON LEARNING OF THE EXISTENCE AND LOCATIONS OF ANY UNDERGROUND FACILITIES NOT SHOWN OR SHOWN INACCURATELY ON THESE PLANS OR NOT PROPERLY MARKED BY THE UTILITY OWNER. IMMEDIATELY NOTIFY THE DISTRICT AND THE OWNER'S REPRESENTATIVE BY TELEPHONE AND IN WRITING.
19. MAINTAIN THE WORK AREA IN A NEAT, CLEAN, AND SANITARY CONDITION AT ALL TIMES AND TO THE SATISFACTION OF THE OWNER, OWNER'S REPRESENTATIVE AND AGENCY WITH LOCAL JURISDICTION. STREETS SHALL BE KEPT CLEAN OF DEBRIS, WITH DUST AND OTHER NUISANCES BEING CONTROLLED AT ALL TIMES.
20. MAINTAIN A COMPLETE AND ACCURATE RECORD OF ALL CHANGES IN CONSTRUCTION FROM THAT SHOWN IN THESE PLANS AND SPECIFICATIONS FOR THE PURPOSE OF PROVIDING A BASIS FOR RECORD DRAWINGS. NO CHANGES FROM THAT SHOWN ON THESE PLANS AND SPECIFICATIONS SHALL BE MADE WITHOUT PRIOR WRITTEN APPROVAL OF THE OWNER'S REPRESENTATIVE.
21. BURIED FITTINGS SHOWN ON THE PLANS AS 1) RESTRAINED MECHANICAL JOINTS, 2) UNRESTRAINTED MECHANICAL JOINTS OR 3) FLANGES MAY BY SUBSTITUTED WITH LIKE RESTRAINED PUSH ON JOINTS CONFORMING TO SPECIFICATION SECTION 402040.

ERSOSION CONTROL NOTES

1. EROSION CONTROL DEVICES SHALL BE INSTALLED TO PREVENT SILT OR DUST FROM LEAVING THE SITE. MEASURES INSTALLED SHALL CONFORM TO THOSE SPECIFIED AS "BEST MANAGEMENT PRACTICES" IN THE REGIONAL WATER QUALITY CONTROL BOARD'S EROSION AND SEDIMENT CONTROL FIELD MANUAL. IN THE EVENT THAT THE INSTALLED DEVICES FAIL, ADDITIONAL OR IMPROVED DEVICES SHALL BE PLACED IMMEDIATELY. EROSION SHALL BE CONTROLLED AT THE SOURCE. THE PROJECT PERIMETER SHALL BE PROTECTED WITH DE-SILTING DEVICES.
2. PROJECT DRIVEWAYS AND CONSTRUCTION ENTRANCES SHALL BE PROTECTED AGAINST EROSION AND TRACKING OF MUD AND DEBRIS AT ALL TIMES, INCLUDING EVENINGS, WEEKENDS AND HOLIDAYS. SUCH PROTECTION MAY BE MODIFIED TO PROVIDE ACCESS TO THE WORK SITE DURING WORK HOURS.
3. ALL STOCKPILES SHALL BE PROTECTED AGAINST WIND AND WATER EROSION, IMMEDIATELY UPON PLACEMENT. SUCH PROTECTION SHALL REMAIN IN PLACE UNTIL USE OR REMOVAL OF THE STOCKPILE, REGARDLESS OF THE TIME OF YEAR.
4. ALL FRESH CUT AND FILL SLOPES SHALL BE IMMEDIATELY PROTECTED BY INSTALLATION OF EROSION CONTROL DEVICES, AND UNTIL PERMANENT EROSION CONTROL IS ESTABLISHED.
5. PERMANENT EROSION CONTROL MEASURES SHALL BE FULLY ESTABLISHED TO THE SATISFACTION OF THE OWNER'S REPRESENTATIVE. (TO BE COMPLETED NO LESS THAN 30 DAYS PRIOR TO REQUEST FOR FINAL APPROVAL.)
6. DURING THE CONSTRUCTION PERIOD, THE PROJECT FRONTAGE(S) SHALL BE SWEPT AND KEPT FREE OF DIRT, DUST AND DEBRIS.
7. WASTE MATERIALS SHALL NOT BE WASHED OFFSITE. THIS INCLUDES BUT IS NOT LIMITED TO SOIL, PAINT, GROUT, COLOR COAT, CONCRETE DUST, SAW RESIDUES, GRINDINGS, AND OIL.
8. THE CONTRACTOR IS RESPONSIBLE FOR THE PLACEMENT OF EROSION CONTROL DEVICES AS ACCORDANCE WITH SWPPP.

UTILITY POTHOLE DATA

LABEL	SURFACE ELEV. (FT)	DEPTH TO TOP OF PIPE (FT)	MATERIAL, PIPE SIZES AND NOTES
PH #1	192.74	2.67	72" DIAMETER RCP STORM
PH #3	193.01	4.67	6" GAS LINE

SURVEY NOTES

1. TOPOGRAPHIC SURVEY PREPARED BY WALLACE GROUP.
2. THE HORIZONTAL DATUM FOR THIS SURVEY IS THE NORTH AMERICAN DATUM OF 1983 CORS 1996 ADJUSTMENT (NAD83(CORS96)), EPOCH DATE OF 2002.0000. THE PROJECTION IS THE CALIFORNIA COORDINATE SYSTEM OF 1983 (CCS83), ZONE 5 PROJECTION.
3. THE ORTHOMETRIC HEIGHTS (ELEVATIONS) ARE BASED ON THE NORTH AMERICAN VERTICAL DATUM OF 1988 (NAVD88). THIS SURVEY TIED TO THE POINT DESIGNATED AS PT. NO 1135 ON THE RECORD OF SURVEY FOUND IN BOOK 147 ON PAGES 57-61 IN THE OFFICE OF THE RECORDER OF SANTA BARBARA COUNTY OF CALIFORNIA, HAVING A PUBLISHED ELEVATION OF 192.50'.
4. ORTHOPHOTOGRAPHY AND AERIAL MAPPING PRODUCED BY:

   GOLDEN STATE AERIALS, INC.

   PHOTOGRAPHY DATED: 9/3/2008 AND 10/9/2008

ABBREVIATIONS

AC	ASPHALTIC CONCRETE
ARV	AIR RELEASE VALVE
AVV	AIR VACUUM VALVE
℄	CENTERLINE
CAV	COMBINATION AIR VALVE
DIA.	DIAMETER
DIP	DUCTILE IRON PIPE
EL	ELEVATION
EXIST.	EXISTING
FLG	FLANGE
FL	FLOW LINE
FO	FIBER OPTIC
MJ	MECHANICAL JOINT
PE	PLAIN END
PL	PROPERTY LINE
PP	POWER POLE
PRV	PRESSURE RELEASE VALVE
R/W	RIGHT-OF-WAY
SD	STORM DRAIN
SS	SANITARY SEWER
STA	STATION
TS	TRAFFIC SIGNAL

LEGEND

RIGHT-OF-WAY LINE
EASEMENT LINE
APPROXIMATE PROPERTY LINE
EDGE OF PAVEMENT
FENCE
STORM DRAIN LINE
OVERHEAD ELECTRICAL LINE
TRAFFIC STRIPING
IRRIGATION PIPE
OIL PIPE LINE
UNDERGROUND ELECTRICAL LINE
UNDERGROUND WATER LINE
T.C.E. (TEMPORARY CONSTRUCTION EASEMENT)
P.U.E. (PUBLIC UTILITY EASEMENT)
NEW PIPELINE CENTERLINE
EXISTING GROUND SURFACE (PROFILE VIEW)

Symbol	Description	Symbol	Description
△1	SURVEY CONTROL POINT AND NUMBER	G	GAS MANHOLE
●1	FOUND MONUMENT AS DESCRIBED (SEE MONUMENT TABLE SHEET G-XXX)	D	STORM DRAIN MANHOLE
G	UNDERGROUND GAS PAINT MARK	S	SANITARY SEWER MANHOLE
SS	SANITARY SEWER PAINT MARK	T	TELEPHONE MANHOLE
W	WATER PAINT MARK	CTV	CABLE TELEVISION BOX
T	UNDERGROUND TELEPHONE PAINT MARK	ELEC	ELECTRICAL BOX
E	UNDERGROUND ELECTRIC PAINT MARK	GAS	GAS BOX
FO	UNDERGROUND FIBER OPTIC PAINT MARK	SLB	STREET LIGHT BOX
20" PINE ●	TREE WITH DIAMETER NOTED	TEL	TELEPHONE BOX
WV	WATER VALVE	CTV	CABLE TELEVISION PEDESTAL
ARV	AIR RELEASE VALVE		BOLLARD/SMALL POLE
V	VALVE	MW	MONITORING WELL
	FIRE HYDRANT	CO	SANITARY SEWER CLEAN OUT
	GUY POLE		STREET SIGN/SIGN POST
	GUY WIRE	FO	FIBER OPTIC PLACARD
TP	TELEPHONE POLE	G	GAS PLACARD
JP	JOINT UTILITY POLE		MAIL BOX
PP	POWER POLE		BRUSH LINE/DRIP LINE
PP	POLE WITH LIGHT	1	POTHOLE NUMBER/LOCATION
EM	ELECTRIC METER		NEW FIRE HYDRANT
GM	GAS METER		NEW CAV
TSB	TRAFFIC SIGNAL BOX		NEW BLOWOFF VALVE
WM	WATER METER		NEW ARV
GV	GAS VALVE		NEW AVV
ICV	IRRIGATION CONTROL VALVE		
	AREA LIGHT		
	LIGHT STANDARD		
C	COMMUNICATION MANHOLE		
E	ELECTRICAL MANHOLE		
B-1	SOIL BORING LOCATION & NUMBER PER PROJECT GEOTECHNICAL REPORT		
C-1	SOIL CPT LOCATION & NUMBER PER PROJECT GEOTECHNICAL REPORT		

AGENCY/UTILITY

AGENCY	CONTACT	PHONE NUMBER
NCSD – GENERAL MANAGER	DON SPAGNOLO, P.E.	(805) 929-1133
NCSD– DISTRICT ENGINEER	PETER SEVCIK, P.E.	(805) 929-1133
NCSD– UTILITIES SUPERINTENDENT	TINA GRIETENS	(805) 929-1341
USACOE – L.A.D. – PROJECT MANAGER	EHSAN J. ESHRAGHI	(213) 452-4013
SBCFC&WCD – ENGINEERING MANAGER	JON FRYE, P.E.	(805) 568-3440
CITY OF SANTA MARIA	DAVID BEAS, P.E.	(805) 925-0951 X225
PG&E	TOM WAHWEOTTEN	(805) 546-5272
AT&T	NEIL ZAKARIA	(805) 546-7012
UNDERGROUND SERVICE ALERT		811

SHEET INDEX
SCALE: 1" = 250'

1
–

0 1/2 1
IF THIS BAR DOES NOT MEASURE 1" THEN DRAWING IS NOT TO FULL SCALE

REV	DATE	DESCRIPTION	APPR
4			
3			
2			
1			

PROJECT ENGINEER	REG NUMBER	EXP DATE
JOSHUA H. REYNOLDS	C65400	09-30-2011

REGISTERED PROFESSIONAL ENGINEER
JOSHUA H. REYNOLDS
No. 65400
Exp. 9/30/11
CIVIL
STATE OF CALIFORNIA

AECOM
AECOM USA, Inc.
1194 Pacific Street, Suite 204
San Luis Obispo, California 93401
T 805.542.9840 F 805.542.9990
www.aecom.com

COMMUNITY SERVICES DISTRICT
NIPOMO
SINCE 1965

NIPOMO COMMUNITY SERVICES DISTRICT
WATERLINE INTERTIE PROJECT - BP3

SHEET INDEX, LEGEND, ABBREVIATIONS AND GENERAL NOTES

DESIGNED: ES
DETAILED: JPF
CHECKED:
APPROVED:
DATE: JULY 2010
AECOM PROJECT NO. 60061295
NCSD PROJECT NO.
CADD STDS. AECOM/BOYLE

FOR REDUCED PLANS
ORIGINAL SCALE IS IN INCHES 0 1 2 3

SURVEY CONTROL AND SURVEY NOTES

FOUND MONUMENT COORDINATE TABLE

PT. NO.	NORTHING	EASTING	ELEV.	DESC.
48	2191323.88	5827013.01	192.4	1" STEEL PIPE W/ TAG INSCRIBED "LS 3485"
49	2191363.89	5827014.92	192.3	1" STEEL PIPE W/ TAG INSCRIBED "LS 3485"
51	2191260.61	5827028.03	191.4	1" STEEL PIPE W/ TAG INSCRIBED "LS 3485"
52	2191263.61	5827008.12	192.0	1" STEEL PIPE W/ TAG INSCRIBED "LS 3485"
54	2191324.55	5826995.65	191.6	1-1/4" STEEL PIPE W/ TAG INSCRIBED "LS 3485"
65	2196880.95	5826692.07	308.5	1" STEEL PIPE W/ TAG INSCRIBED "LS 3485"
66	2196065.28	5827380.94	302.7	3/4" STEEL PIPE WITH TAG INSCRIBED "LS 2391"
67	2195198.02	5826354.10	282.6	1-1/4" STEEL PIPE WITH ILLEDGIBLE YELLOW PLASTIC CAP
68	2194230.33	5827171.40	285.1	1" STEEL PIPE W/ TAG INSCRIBED "LS 3485"
70	2195594.43	5825369.80	310.4	1" STEEL PIPE W/ TAG INSCRIBED "LS 3485"
71	2196204.83	5825855.31	314.1	1" STEEL PIPE W/ TAG INSCRIBED "LS 3485"
72	2196337.46	5826013.00	313.8	1" STEEL PIPE WITH OUT TAG
76	2203913.20	5821832.35	309.9	6"X6" CONCRETE MONUMENT
78	2201506.01	5819059.58	336.2	2-1/2" COUNTY SURVEYOR MONUMENT
98	2201544.38	5818964.37	340.2	1" STEEL PIPE (TOP BROKEN OFF)
119	2201451.82	5819078.90	0.0	3/4" STEEL PIPE (NO TAG)
277	2190520.16	5827156.17	195.8	BRASS CAP IN MONUMENT WELL INSCRIBED " LS 5565"
278	2190386.72	5827140.94	195.7	BRASS CAP IN MONUMENT WELL INSCRIBED " LS 5565"
279	2190281.84	5827130.65	195.6	BRASS CAP IN MONUMENT WELL INSCRIBED " LS 5565"
280	2190190.95	5827126.36	195.5	BRASS CAP IN MONUMENT WELL INSCRIBED " LS 5565"
282	2188872.96	5827063.39	194.0	BRASS CAP IN MONUMENT WELL INSCRIBED " LS 5565"
283	2188824.53	5827060.52	193.8	BRASS CAP IN MONUMENT WELL INSCRIBED " LS 5565"
284	2188761.51	5827054.34	193.7	BRASS CAP IN MONUMENT WELL INSCRIBED " LS 5565"
285	2188542.58	5827009.73	192.9	BRASS CAP IN MONUMENT WELL INSCRIBED " LS 5565"
291	2186227.29	5826847.72	196.1	BRASS CAP IN MONUMENT WELL INSCRIBED " RCE 17169"
579	2204373.99	5821618.48	310.5	1/2" RE-INFORCING BAR WITH YELLOW PLASTIC CAP INSCRIBED "LS 4442"
580	2205483.30	5820714.55	328.1	LEAD WITH TACK AND TAG INSCRIBED "RCE 31581"
581	2205580.28	5820630.84	328.9	BRASS CAP IN MONUMENT WELL INSCRIBED "RC E31581"
582	2205770.95	5820469.34	327.0	BRASS CAP IN MONUMENT WELL INSCRIBED "RC E31581"
583	2205831.52	5820421.48	328.6	LEAD WITH TACK AND TAG INSCRIBED "RCE 31581"
585	2205992.76	5820274.99	328.0	BRASS CAP IN MONUMENT WELL INSCRIBED " LS 6893"
586	2206392.89	5819941.30	328.3	2" STEEL PIPE IN MONUMENT WELL
587	2207784.02	5818766.07	343.2	6"X6" CONCRETE MONUMENT
588	2208220.93	5818353.61	353.7	5/8" RE-INFORCING BAR W/ YELLOW PLASTIC CAP INSCRIBED "EDA LS 5693"
648	2207241.78	5819225.44	333.9	LEAD WITH TACK AND TAG INSCRIBED "LS 3485"
654	2206829.98	5819564.71	330.6	HOLE IN CONC LEAD AND TACK
655	2207052.79	5819367.93	332.1	LEAD WITH TACK AND TAG INSCRIBED "LS 4283"
690	2207748.32	5817806.09	347.8	2" BRASS CAP IN MONUMENT WELL INSCRIBED "EDA LS 5693"
691	2208131.40	5818438.21	352.7	5/8" RE-INFORCING BAR W/ YELLOW PLASTIC CAP INSCRIBED "LS 7818"
693	2201942.73	5818471.48	310.1	2" BRASS CAP IN MONUMENT WELL
694	2202634.05	5817664.09	323.6	2-1/2" COUNTY SURVEYOR MONUMENT
695	2202939.08	5817239.36	312.8	2" BRASS CAP IN MONUMENT WELL INSCRIBED "RCE 21807"
696	2203523.69	5816604.83	339.2	2" BRASS CAP IN MONUMENT WELL
697	2203399.39	5816717.84	334.9	2" BRASS CAP IN MONUMENT WELL
698	2203675.59	5816534.85	338.3	2" BRASS CAP IN MONUMENT WELL
737	2204546.09	5816285.51	364.1	2" BRASS CAP IN MONUMENT WELL
738	2204791.58	5816215.07	369.4	2" BRASS CAP IN MONUMENT WELL
739	2205045.61	5816080.98	365.1	2" BRASS CAP IN MONUMENT WELL
740	2205302.56	5815862.53	362.9	2" BRASS CAP IN MONUMENT WELL
1000	2189472.34	5827092.16	193.9	BRASS CAP IN MONUMENT WELL INSCRIBED "LS 5565"
1001	2191270.49	5827192.17	197.2	BRASS CAP IN MONUMENT WELL INSCRIBED "LS 5565"
1099	2207444.44	5819401.86	333.3	1" STEEL PIPE WITH TAG INSCRIBED "RCE 9806"
1100	2207418.05	5819359.20	332.9	1" STEEL PIPE WITH TAG INSCRIBED "RCE 9806"
1101	2207416.30	5819356.14	332.4	1" STEEL PIPE (NO TAG)
1103	2207940.20	5819624.93	333.1	1" STEEL PIPE WITH YELLOW PLASTIC CAP INSCRIBED "LS 3673"
1104	2208192.36	5819408.03	334.7	1" STEEL PIPE WITH YELLOW PLASTIC CAP INSCRIBED "LS 3673"
1105	2208264.82	5819264.26	335.0	NAIL AND TAG INSCRIBED "RCE 29743"
1106	2208342.41	5819197.62	335.4	NAIL AND TAG INSCRIBED "RCE 29743"
1107	2208406.66	5819142.47	336.2	NAIL AND TAG INSCRIBED "RCE 29743"
1108	2208645.03	5819019.84	341.3	1/2" RE-INFORCING BAR W/ YELLOW PLASTIC CAP INSCRIBED "LS 4442"
1109	2208591.34	5819065.64	338.7	1" STEEL PIPE WITH ILLEDGIBLE CAP
1110	2208793.10	5818893.61	343.1	1/2" RE-INFORCING BAR W/ YELLOW PLASTIC CAP INSCRIBED "LS 4442"
1111	2208557.55	5819054.95	339.2	PK NAIL
1112	2209240.00	5818474.59	349.8	2" BRASS CAP

SHEET LOCATION INDEX

AREA	PROGRESSION	SHEET NUMBERS
BLOSSER STREET (TAYLOR STREET TO LEVEE)	SOUTH TO NORTH	2-7
LEVEE TO JOSHUA STREET (NORTH WEST ALTERNATIVE)	SOUTH TO NORTH	8-22
EDGE OF MESA TO JOSHUA STREET (SOUTHEAST ALTERNATIVE)	EAST TO NORTH	23-29
SOUTHLAND STREET (ORCHARD TO FRONTAGE)	WEST TO EAST	30-34
FRONTAGE ROAD/HILL STREET (SOUTHLAND TO MARY)	SOUTH TO NORTH	34-41
ORCHARD STREET (SOUTHLAND TO GRANDE)	SOUTH TO NORTH	42-47
DARBY LANE/OAKGLENN AVENUE FRONTAGE TO TEFFT STREET)	SOUTH TO NORTH	48-50

SURVEY CONTROL POINTS

PT. NO.	NORTHING	EASTING	ELEV.	DESC.
2	2198166.98	5827905.74	298.20	5/8" RBR NO CAP
3	2186052.90	5826776.48	198.76	PK NAIL WITH SHINER
4	2186192.85	5827770.48	198.88	MONUMENT WELL LID
5	2187013.91	5826757.59	195.08	PK NAIL WITH SHINER
6	2188552.92	5826983.96	193.02	PK NAIL WITH SHINER
7	2188848.27	5827786.93	194.89	MON WELL LID
8	2189471.91	5827064.42	193.94	PK NAIL WITH SHINER
9	2191256.44	5827360.22	198.30	MON WELL LID
10	2191550.50	5826217.12	188.70	5/8" RBR NO CAP
11	2196510.09	5826180.54	307.11	PK NAIL WITH SHINER
12	2196622.46	5825305.54	296.70	PK NAIL WITH SHINER
13	2196871.92	5826641.17	308.31	PK NAIL WITH SHINER
14	2193807.74	5826453.22	185.69	5/8" RBR NO CAP
15	2192838.59	5826792.71	188.60	5/8" RBR NO CAP
16	2205291.72	5820883.14	326.04	PK NAIL WITH SHINER
17	2203919.54	5821906.40	310.33	PK NAIL WITH SHINER
18	2202951.95	5819261.50	298.94	PK NAIL WITH SHINER
19	2202262.77	5819848.56	325.73	PK NAIL WITH SHINER
20	2202679.65	5820432.96	317.86	PK NAIL WITH SHINER
21	2203988.14	5820522.96	300.36	PK NAIL WITH SHINER
22	2203319.10	5821099.11	312.60	PK NAIL WITH SHINER
23	2201480.32	5819128.49	333.97	PK NAIL WITH SHINER
24	2202256.15	5818106.78	322.50	PK NAIL WITH SHINER
25	2203014.04	5817226.12	318.31	MAG NAILWITH SHINER
26	2203691.20	5816562.05	339.69	PK NAIL WITH SHINER
27	2204608.81	5817768.00	335.67	PK NAIL WITH SHINER
28	2205786.19	5819254.56	354.10	PK NAIL WITH SHINER
29	2208366.37	5819884.81	329.57	PK NAIL WITH SHINER
30	2207464.34	5819069.97	336.84	PK NAIL WITH SHINER
31	2208171.81	5818441.05	352.69	PK NAIL WITH SHINER
32	2208520.16	5817436.27	360.20	PK NAIL WITH SHINER
33	2208763.57	5817748.06	360.13	PK NAIL

SURVEYOR'S STATEMENT

THIS MAP REPRESENTS A SURVEY MADE BY ME AT THE REQUEST OF AECOM. THE FIELD WORK FOR THE SURVEY WAS CONDUCTED FROM AUGUST 8, 2008 THROUGH JANUARY 15, 2009.

DATE: JANUARY 26, 2009

EDWARD M. READING, LS 8081
(LICENSE EXPIRES 12/31/2009)

LICENSED LAND SURVEYOR
Edward M. Reading
No. 8081
Exp. 12/31/09
STATE OF CALIFORNIA

EASEMENT NOTES

FOR APN'S:

117-030-061
117-030-083
117-030-084

THE FOLLOWING EASEMENTS ARE LISTED PER ITEM NUMBER AS CONTAINED IN FIRST AMERICAN TITLE COMPANY REPORT NO. 4001-2492337 (NP) DATED AUGUST 7, 2006. THE EASEMENTS HAVE BEEN PLOTTED FROM RECORD INFORMATION AND ARE NOT BASED ON ANY FIELD SURVEY WORK.

ITEM 3: RIGHT OF WAY FOR DITCHES AND CANALS PER 1043/OR/561. NON-PLOTTABLE.

ITEM 4: RIGHT OF WAY FOR DITCHES AND CANALS PER C/PATENTS/56. NON-PLOTTABLE.

ITEM 5: RIGHT OF WAY FOR DITCHES AND CANALS PER C/PATENTS/188. NON-PLOTTABLE.

ITEM 6: PIPE LINE EASEMENT PER 106/DEEDS/216. NON-PLOTTABLE.

ITEM 7: PIPE LINE EASEMENT PER 106/DEEDS/217. NON-PLOTTABLE.

ITEM 9: RIGHT OF WAY FOR DITCHES AND CANALS PER 284/OR/353 (SAN LUIS OBISPO COUNTY). NON-PLOTTABLE.

ITEM 10: PUBLIC FLOOD CONTROL EASEMENT PER 119/OR/1180. BLANKET.

ITEM 14: INGRESS AND EGRESS EASEMENT PER INST. NO. 74-009505 OF OFFICIAL RECORDS. NON-PLOTTABLE.

FOR APN'S:

090-341-033
090-341-002
090-341-023

THE FOLLOWING EASEMENTS ARE LISTED PER ITEM NUMBER AS CONTAINED IN FIRST AMERICAN TITLE COMPANY REPORT NO. 4001-2492562(NP) DATED AUGUST 11, 2006. THE EASEMENTS HAVE BEEN PLOTTED FROM RECORD INFORMATION AND ARE NOT BASED ON ANY FIELD SURVEY WORK.

ITEM 6: PIPE LINE EASEMENT PER 70/DEEDS/385. NOT WITHIN PROJECT (MAPPED) AREA.

ITEM 7: PIPE LINE EASEMENT PER 15/OR/240. NOT WITHIN PROJECT (MAPPED) AREA.

ITEM 8: JETTY EASEMENT PER 259/OR/396. BLANKET.

ITEM 9: POLE LINE EASEMENT PER 292/OR/386. NON-PLOTTABLE.

ITEM 10: POLE LINE, PIPELINE EASEMENT PER 294/OR/268. NOT WITHIN PROJECT (MAPPED) AREA.

ITEM 11: PIPE LINE EASEMENT PER 308/OR/479. BLANKET.

ITEM 12: FLOWAGE EASEMENT PER 1292/OR/380. BLANKET.

ITEM 13: UNRECORDED LEASE AS DISCLOSED IN 2312/OR/396. NOT WITHIN PROJECT (MAPPED) AREA.

ITEM 14: ELECTRICAL FACILITIES EASEMENT PER 2765/OR/553. NOT WITHIN PROJECT (MAPPED) AREA.

ITEM 15: COMMUNICATION FACILITIES EASEMENT PER INST. NO. 1990-81893 OF OFFICIAL RECORDS. NOT WITHIN PROJECT (MAPPED) AREA.

EASEMENT NOTES (CONTINUED)

FOR APN:
090-341-019

THE FOLLOWING EASEMENTS ARE LISTED PER ITEM NUMBER AS CONTAINED IN FIRST AMERICAN TITLE COMPANY REPORT NO. 4001-2492337 (NP) DATED AUGUST 7, 2006. THE EASEMENTS HAVE BEEN PLOTTED FROM RECORD INFORMATION AND ARE NOT BASED ON ANY FIELD SURVEY WORK.

ITEM 3: RIGHT OF WAY FOR DITCHES AND CANALS PER 1043/OR/561. NON-PLOTTABLE.

ITEM 4: POLE LINE EASEMENT PER 275/OR/172. NOT WITHIN PROJECT (MAPPED) AREA.

ITEM 5: RIGHTS OF WAY FOR DITCHES PER 284/OR/353. NON-PLOTTABLE.

ITEM 6: PIPE LINE EASEMENT PER 310/OR/372. BLANKET.

ITEM 7: PUBLIC FLOOD CONTROL EASEMENT PER 1248/OR/293. A PORTION OF WHICH IS PLOTTED HEREON.

FOR APN'S:
090-291-039
090-291-040
090-291-041
090-291-042

THE FOLLOWING EASEMENTS ARE LISTED PER ITEM NUMBER AS CONTAINED IN FIRST AMERICAN TITLE COMPANY REPORT NO. 4001-2491945 (NP) DATED AUGUST 7, 2006. THE EASEMENTS HAVE BEEN PLOTTED FROM RECORD INFORMATION AND ARE NOT BASED ON ANY FIELD SURVEY WORK.

ITEM 3: PIPE LINE EASEMENT PER 308/OR/480. A PORTION OF WHICH IS PLOTTED HEREON.

ITEM 4: ELECTRICAL FACILITIES EASEMENT PER 1814/OR/498. A PORTION OF WHICH IS PLOTTED HEREON.

ITEM 5: OFFERS OF DEDICATION, EASEMENTS SHOWN ON 18/MB/78. PORTIONS OF WHICH ARE PLOTTED HEREON.

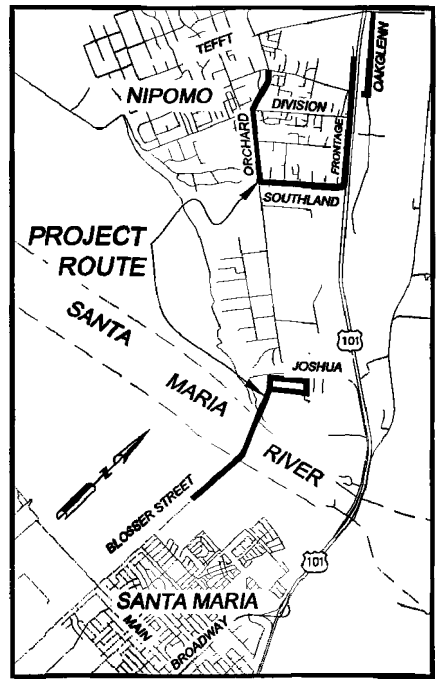

VICINITY MAP
SCALE: 1 INCH = 4000 FEET

SURVEY NOTES

1. THE HORIZONTAL DATUM FOR THIS SURVEY IS THE NORTH AMERICAN DATUM OF 1983, CORS 1996 ADJUSTMENT [NAD83(CORS96)], EPOCH DATE OF 2002.0000.
2. THE PROJECTION USED IS THE CALIFORNIA COORDINATE SYSTEM OF 1983 (CCS83), ZONE 5 PROJECTION.
3. THIS SURVEY TIED TO 3 NATIONAL GEODETIC SURVEY (NGS) CONTINUOUSLY OPERATING REFERENCE STATIONS (CORS). THOSE STATIONS ARE THE NGS POINTS DESIGNATED "P532", HAVING A PUBLISHED POSITION OF: NORTHING 2,424,604.26', EASTING 5,888,000.80'; AND "BKR1", HAVING A PUBLISHED POSITION OF: NORTHING 2,236,322.04', EASTING 6,229,842.23' AND "VNDP" HAVING A PUBLISHED POSITION OF: NORTHING 2,035,085.13, EASTING 5,773,980.56. THE RESULTING BEARING FROM "P532" TO "BKR1" BEING: S 61°09'42" E. THE BEARINGS SHOWN HEREON ARE REFERENCED TO CCS83, ZONE 5 GRID NORTH.
4. ALL MEASUREMENTS LISTED, SHOWN AND REPRESENTED HEREON ARE BASED ON GRID DISTANCES OF THE CALIFORNIA COORDINATE SYSTEM OF 1983 ZONE 5 PROJECTION. THE COMBINED SCALE FACTOR FOR THE PROJECT IS 1.00025844 THIS SCALE FACTOR WAS CALCULATED USING AN ELEVATION OF 296.20 FEET FOR PT. NO. 2. DIVIDE THE DISTANCES HEREON BY THE COMBINED SCALE FACTOR TO OBTAIN GROUND DISTANCES. ALL DISTANCES SHOWN ARE U.S. SURVEY FEET
5. THE CONVERGENCE ANGLE IS: -1°23'49" AT PT. NO. 2.
6. THE ORTHOMETRIC HEIGHTS (ELEVATIONS) ARE BASED ON THE NORTH AMERICAN VERTICAL DATUM OF 1988 (NAVD88). THIS SURVEY TIED TO THE POINT DESIGNATED AS PT. NO 1135 ON THE RECORD OF SURVEY FOUND IN BOOK 147 ON PAGES 57-61 IN THE OFFICE OF THE RECORDER OF SANTA BARBARA COUNTY CALIFORNIA, HAVING A PUBLISHED ELEVATION OF 192.50'.
7. THE CONTOUR INTERVAL IS 1 FOOT.
8. ORTHOPHOTOGRAPHY AND AERIAL MAPPING
   PRODUCED BY:
   GOLDEN STATE AERIALS, INC.
   3195 MCMILLAN RD. SUITE E
   SAN LUIS OBISPO, CA 93401
   PHONE: (805) 549-0399

   PHOTOGRAPHY DATED: 9/3/2008 AND 10/9/2008
9. UNDERGROUND UTILITY LOCATIONS ARE PLOTTED BASED ON ABOVE GROUND PAINT MARKS BY OTHERS, ABOVE GROUND SURFACE STRUCTURES. ACTUAL LOCATION MAY DIFFER. ADDITIONAL UNDERGROUND UTILITY LINES MAY EXIST. FOR INFORMATION REGARDING UTILITY LOCATION, SIZE, DEPTH, CONDITION, AND CAPACITY CONTACT UTILITY OR MUNICIPAL/PUBLIC SERVICE FACILITY.
10. UNDERGROUND PIPE SIZES ARE BASED ON VISUAL OBSERVATIONS MADE FROM THE SURFACE AND ARE APPROXIMATE.
11. THIS PROJECT WAS SURVEYED AT A HORIZONTAL SCALE OF 1 INCH = 40 FEET. IT IS PLOTTED AT A SCALE OF 1 INCH = 20 FEET FOR CLARITY. NO CLAIM IS MADE THAT THIS MAPPING MEETS ANY ACCURACY STANDARDS FOR 20 SCALE MAPPING.

WALLACE GROUP
CIVIL ENGINEERING
CONSTRUCTION MANAGEMENT
LANDSCAPE ARCHITECTURE
MECHANICAL ENGINEERING
PLANNING
PUBLIC WORKS ADMINISTRATION
SURVEYING / GIS SOLUTIONS
WATER RESOURCES
WALLACE SWANSON INTERNATIONAL
612 CLARION COURT
SAN LUIS OBISPO, CA 93401
T 805 544-4011 F 805 544-4294
www.wallacegroup.us

These plans and specifications, and the ideas and designs incorporated herein, as instruments of service prepared for the construction of work shown hereon and shall not be used in whole or in part for any other project without written authority of Wallace Group, a California Corporation.
Copyright © 2007 Wallace Group, a California Corporation. All rights reserved. Copies of this drawing shall have this notice.

DESCRIPTION OF REVISIONS	BY	DATE	REV

TOPOGRAPHIC SURVEY OF NIPOMO CSD WATERLINE INTERTIE PROJECT LOCATED IN THE COMMUNITY OF NIPOMO, CALIFORNIA & THE CITY OF SANTA MARIA, CALIFORNIA

PROJECT NO. 0532-0024		
SURVEYED BY:	EMR	10-12-2008
DRAFTED BY:	EMR	1/2009
CHECKED BY:	JTM	1/2009

SHEET G-003 OF 31 SHEETS

CAD OPERATOR: EDR DATE: 2009-01-29 DRAWING FILE NAME: 532-0024 BASE.DWG LAYOUT NAME: SHEET - 1

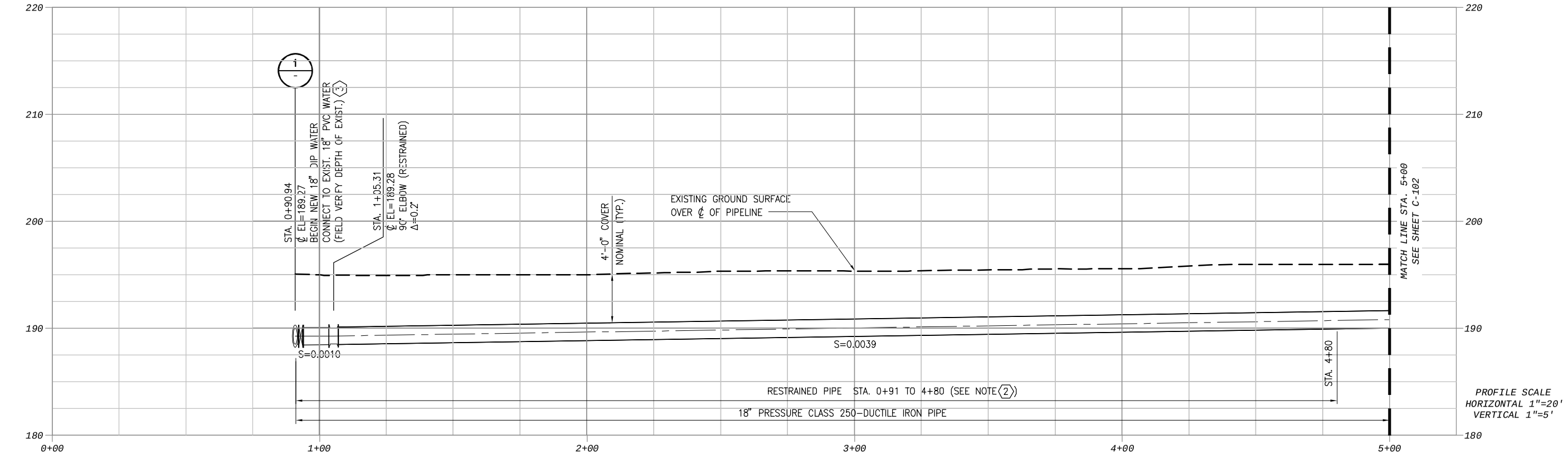

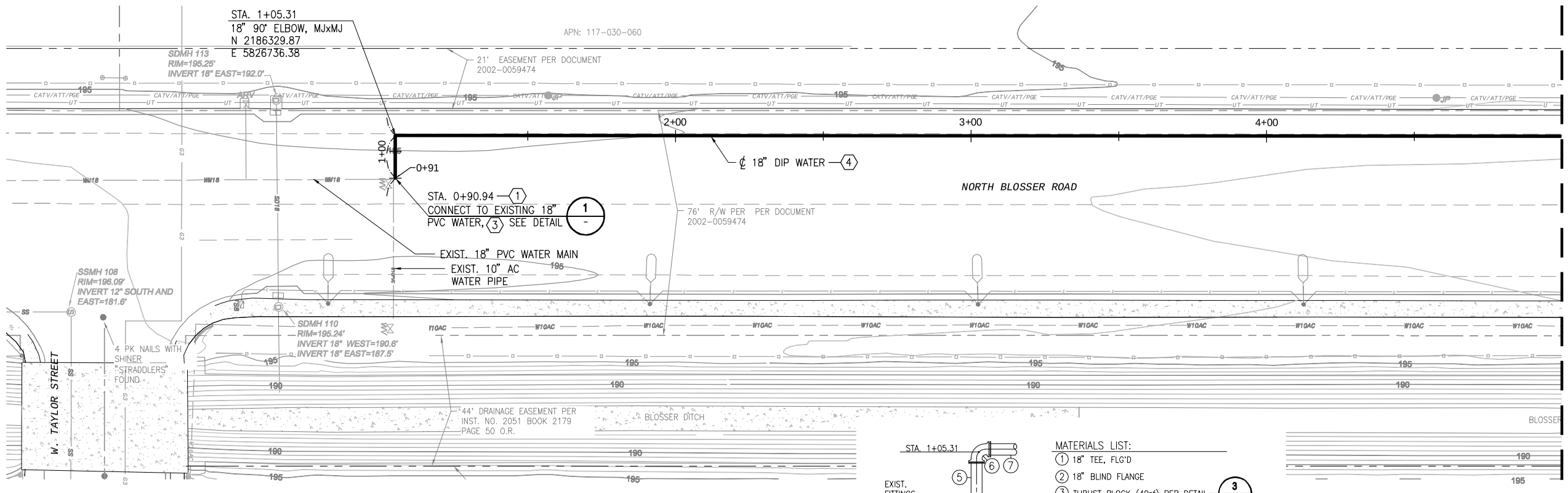

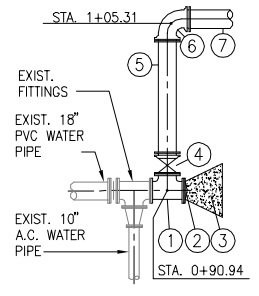

MATERIALS LIST:

1. 18" TEE, FLG'D
2. 18" BLIND FLANGE
3. THRUST BLOCK (40sf) PER DETAIL 3 / C-502
4. 18" BUTTERFLY VALVE, FLGxMJ (RESTRAINED)
5. 18"ø D.I. PIPE SPOOL, PExPE
6. 18" 90° ELBOW, MJxMJ (RESTRAINED)
7. 18" D.I. PIPE, RESTRAINED

CONSTRUCTION NOTES:

1. NOTIFY NCSD AND CITY OF SANTA MARIA STAFF PRIOR TO INTERRUPTION OF SERVICE. INTERRUPTION OF SERVICE SHALL BE COORDINATED WITH NCSD AND CITY OF SANTA MARIA STAFF. DURATION SHALL BE KEPT TO MINIMUM AND SHALL BE LESS THAN 4-HOURS UNLESS APPROVED BY THE CITY OF SANTA MARIA PRIOR TO BEGINNING WORK.
2. INSTALL RESTRAINED JOINT PIPE AND FITTINGS PER SPECIFICATION SECTION 402040.
3. CONTRACTOR TO POTHOLE POC @ STA. 0+90.94 PRIOR TO BEGINNING CONSTRUCTION. PROVIDE OWNER'S REPRESENTATIVE WITH POTHOLE REPORT INDICATING HORIZONTAL AND VERTICAL LOCATION OF EXISTING WATERLINE.
4. 18"ø DUCTILE IRON PIPE PER SPECIFICATION SECTION 402040. TRENCH PER DETAIL 3 / C-503 AND REPAIR PAVEMENT IN ACCORDANCE WITH 4/C-503 AND CITY OF SANTA MARIA ENCROACHMENT PERMIT.

SCALE
0 10 20 40
1 INCH = 20 FEET

STA. 0+90.94 CONNECTION TO EXISTING

1 / -

NOT TO SCALE

REV	DATE	DESCRIPTION	APPR
PROJECT ENGINEER		REF NUMBER	EXP DATE
JOSHUA H. REYNOLDS		C85-400	09/30/2011

REGISTERED PROFESSIONAL ENGINEER JOSHUA H. REYNOLDS No. 65400 Exp. 9/30/11 STATE OF CALIFORNIA

AECOM

AECOM USA, Inc.
1194 Pacific Street, Suite 204
San Luis Obispo, California 93401
T 805.542.9840 F 805.542.9990
www.aecom.com

NIPOMO COMMUNITY SERVICES DISTRICT

NIPOMO COMMUNITY SERVICES DISTRICT WATERLINE INTERTIE PROJECT - BP3

PLAN AND PROFILE STA. 1+00 to STA. 5+00

DESIGNED:	ES
DETAILED:	JPF
CHECKED:	
APPROVED:	
DATE:	JULY 2010
AECOM PROJECT NO.	60061295
NCSD PROJECT NO.	
CADD STDS.	AECOM/BOYLE

C-101
SHEET 4 OF 33

811 Know what's below. Call before you dig.

0 1/2 1
IF THIS BAR DOES NOT MEASURE 1" THEN DRAWING IS NOT TO FULL SCALE

DWG: W:\Nipomo CSD (19996)\19996.70 Waterline Intertie Project Design\Design Plans\CADD\Plansets\BP-3_BLOSSER ROAD\100% Plansets\C-101 to C-111.dwg Layout Name: C-101 - Plotted by: Froelicher, Jim Date: 7/28/2010 - 5:05 PM
XREFS: NCSD-BD_BP3 - fugro points - WallaceBase - Ex-Utilities - POT HOLES ACAD2004.v2 - PRV.v2 - Surface-Section2.v3 IMAGES: NCSD LOGO-transparent_grayscale_small.jpg

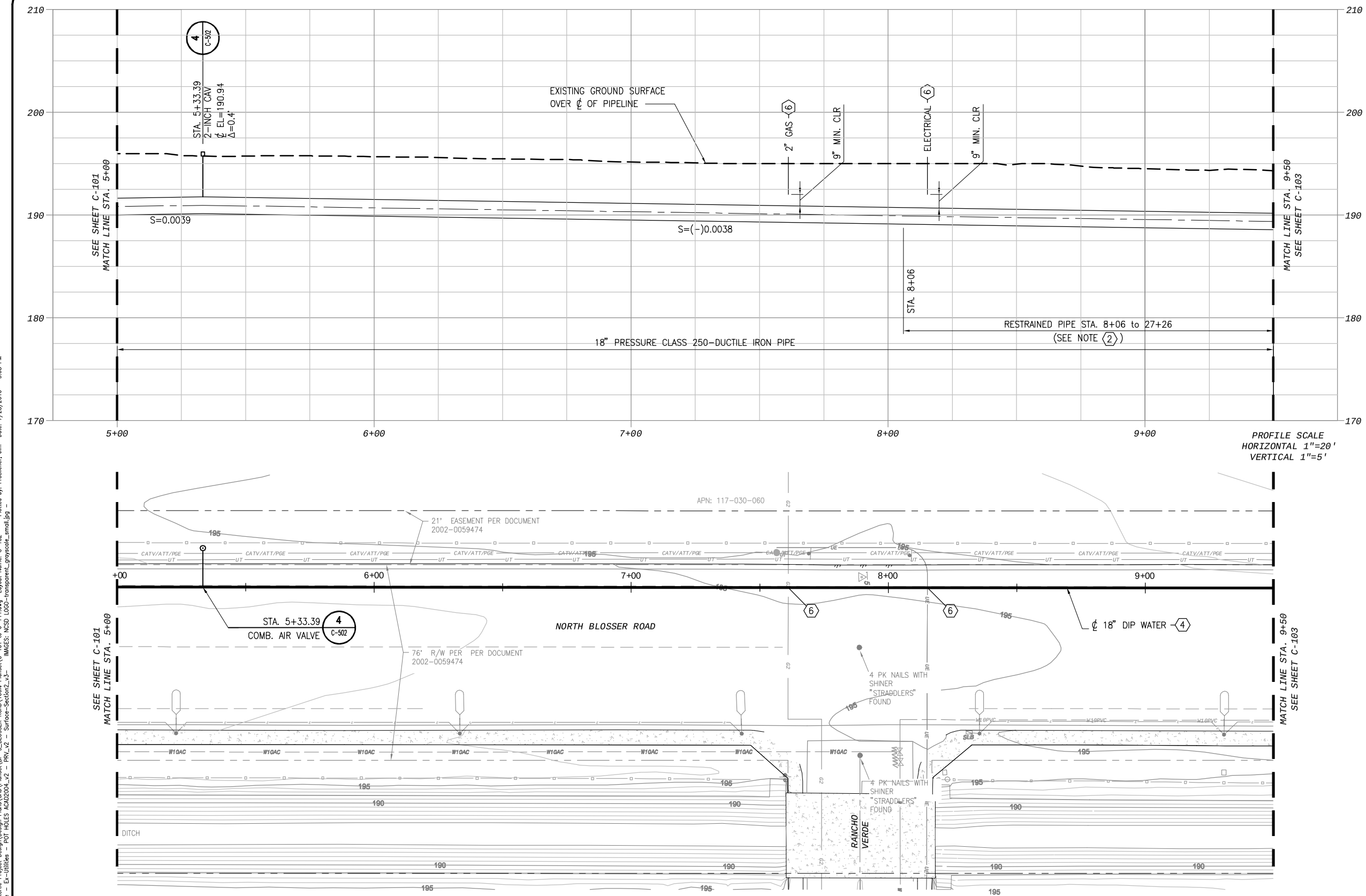

SCALE
0 10 20 40
1 INCH = 20 FEET

CONSTRUCTION NOTES:

(2) INSTALL RESTRAINED JOINT PIPE AND FITTINGS PER SPECIFICATION SECTION 402040.

(4) 18"ø DUCTILE IRON PIPE PER SPECIFICATION SECTION 402040. TRENCH PER DETAIL AND REPAIR PAVEMENT IN ACCORDANCE WITH 4/C-503 AND CITY OF SANTA MARIA ENCROACHMENT PERMIT. — 3 C-503

(6) POTHOLE UTILITY CROSSINGS IN ADVANCE OF WORK. NOTIFY OWNER'S REPRESENTATIVE IF CONFLICTS ARE DISCOVERED.

Know what's **below.** **Call** before you dig.

0 1/2 1
IF THIS BAR DOES NOT MEASURE 1" THEN DRAWING IS NOT TO FULL SCALE

REV	DESCRIPTION	APPR	DATE

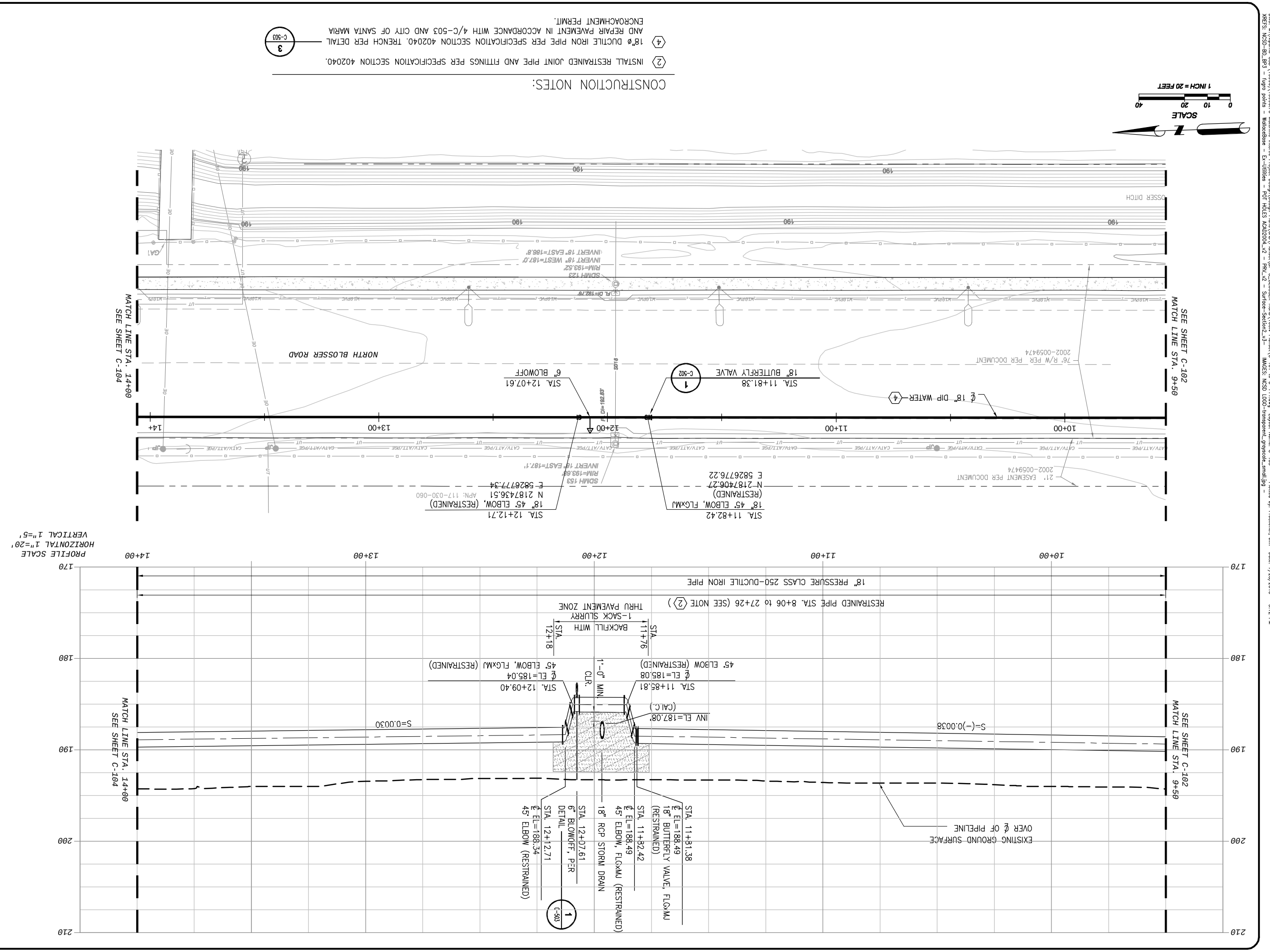

Know what's below. Call before you dig.

811

IF THIS BAR DOES NOT MEASURE 1" THEN DRAWING IS NOT TO FULL SCALE

DESIGNED: ES
DETAILED: JPF
CHECKED:
APPROVED:
DATE: JULY 2010
AECOM PROJECT NO. 60061295
NCSD PROJECT NO.
CADD STDS. AECOM/BOYLE

C-103
SHEET 6 OF 33

NIPOMO COMMUNITY SERVICES DISTRICT
WATERLINE INTERTIE PROJECT - BP3

PLAN AND PROFILE
STA. 9+50 to STA. 14+00

AECOM

AECOM USA, Inc.
1194 Pacific Street, Suite 204
San Luis Obispo, California 93401
T 805.542.9840 F 805.542.9990
www.aecom.com

REV	DATE	DESCRIPTION	APPR
4			
3			
2			
1			

PROJECT ENGINEER: JOSHUA H REYNOLDS
REG NUMBER: C86400
EXP DATE: 09/30/2011

DWG: W:\Nipomo CSD (19996)\19996.70 Waterline Intertie Project Design\Design Plans\CAD\Planset\BP-3_BLOSSER ROAD\100% Planset\C-101 to C-111.dwg Layout Name: C-103 - Plotted by: Froelicher, Jim Date: 7/28/2010 - 5:12 PM
XREFS: NCSD-BD_BP3 - fugro points - WallaceBase - Ex-Utilities - POT HOLES ACAD2004_v2 - PRV_v2 - Surface-Section2_v3- IMAGES: NCSD LOGO-transparent_grayscale_small.jpg -

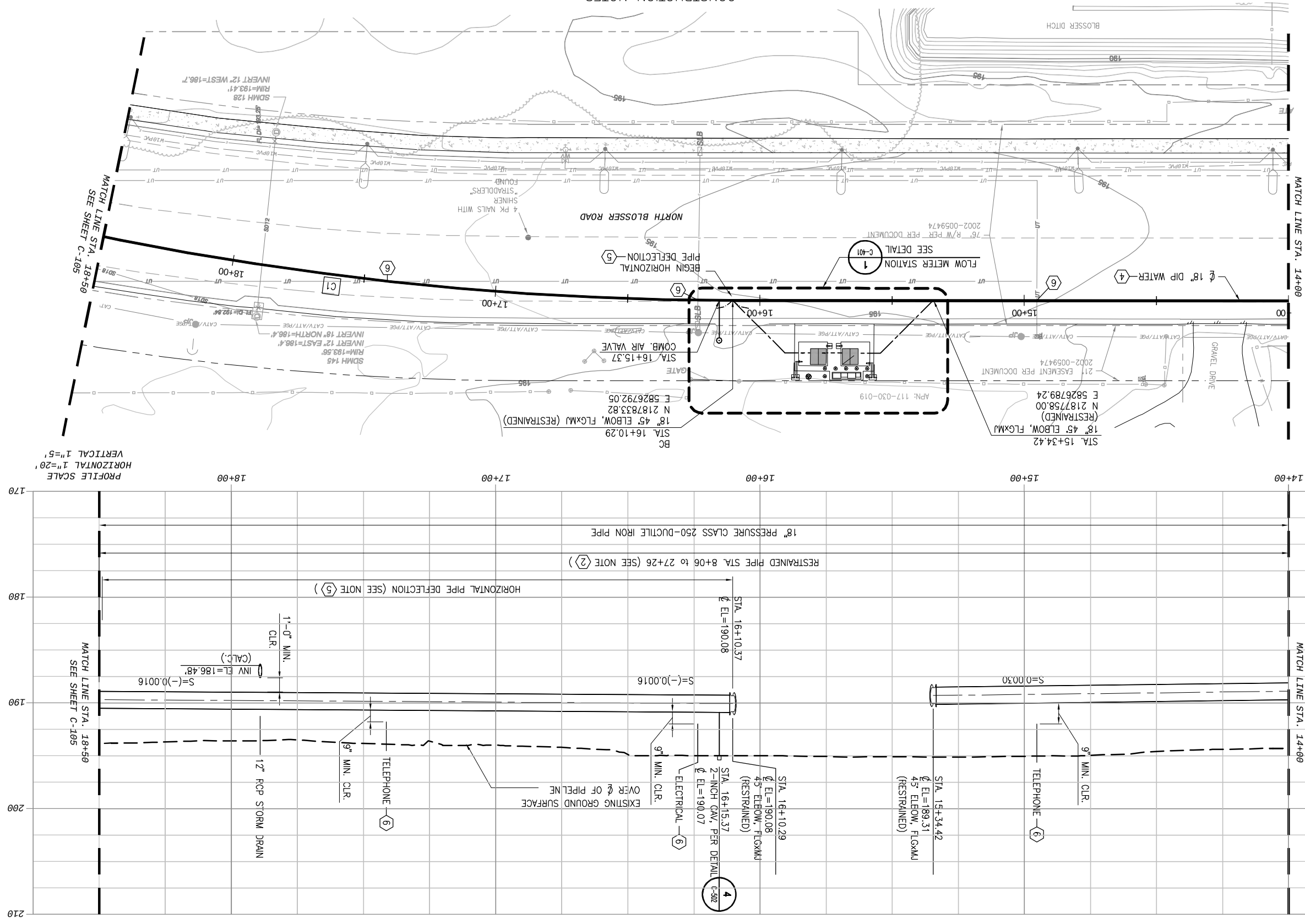

CONSTRUCTION NOTES:

2. INSTALL RESTRAINED JOINT PIPE AND FITTINGS PER SPECIFICATION SECTION 402040.
4. 18"ø DUCTILE IRON PIPE PER SPECIFICATION SECTION 402040. TRENCH PER DETAIL 3 C-503 AND REPAIR PAVEMENT IN ACCORDANCE WITH 4/C-503 AND CITY OF SANTA MARIA ENCROACHMENT PERMIT.
5. TO OBTAIN ALIGNMENT DEFLECT PIPE AT JOINTS PER SPECIFICATION SECTION 402040 AND MANUFACTURER'S RECOMMENDATIONS. DO NOT EXCEED 80% OF MANUFACTURER'S RECOMMENDATION.
6. POTHOLE UTILITY CROSSINGS IN ADVANCE OF WORK. NOTIFY OWNER'S REPRESENTATIVE IF CONFLICTS ARE DISCOVERED.

CURVE TABLE

CURVE	RADIUS	LENGTH	EXTERNAL TANGENT	DELTA
C1	1199.97'	362.66'	182.72	17.316

811 Know what's below. Call before you dig.

IF THIS BAR DOES NOT MEASURE 1" THEN DRAWING IS NOT TO FULL SCALE

DWG: W:\Nipomo CSD (19996)\19996.70 Waterline Intertie Project Design\Design Plans\CAD\Planset\BP-3_BLOSSER ROAD\100% Planset\C-101 to C-111.dwg Layout Name: C-104 - Plotted by: Froelicher, Jim Date: 7/28/2010 - 5:18 PM
XREFS: NCSD-BD_BP3 - fugro points - WallaceBase - Ex-Utilities - POT HOLES ACAD2004_v2 - PRV_v2 - Surface-Section2_v3- IMAGES: NCSD LOGO-transparent_grayscale_small.jpg -

NIPOMO COMMUNITY SERVICES DISTRICT
WATERLINE INTERTIE PROJECT - BP3

PLAN AND PROFILE
STA. 14+00 to STA. 18+50

DESIGNED: ES
DETAILED: JPF
CHECKED:
APPROVED:
DATE: JULY 2010
AECOM PROJECT NO. 60061295
NCSD PROJECT NO.
CADD STDS. AECOM/BOYLE

C-104
SHEET 7 OF 33

AECOM USA, Inc.
1194 Pacific Street, Suite 204
San Luis Obispo, California 93401
T 805.542.9840 F 805.542.9990
www.aecom.com

AECOM

REGISTERED PROFESSIONAL ENGINEER
No. 65400
Exp. 9/30/11
STATE OF CALIFORNIA

REV	DATE	DESCRIPTION	APPR
4			
3			
2			
1			

PROJECT ENGINEER: JOSHUA H REYNOLDS
REG NUMBER: C65400
EXP DATE: 09/30/2011

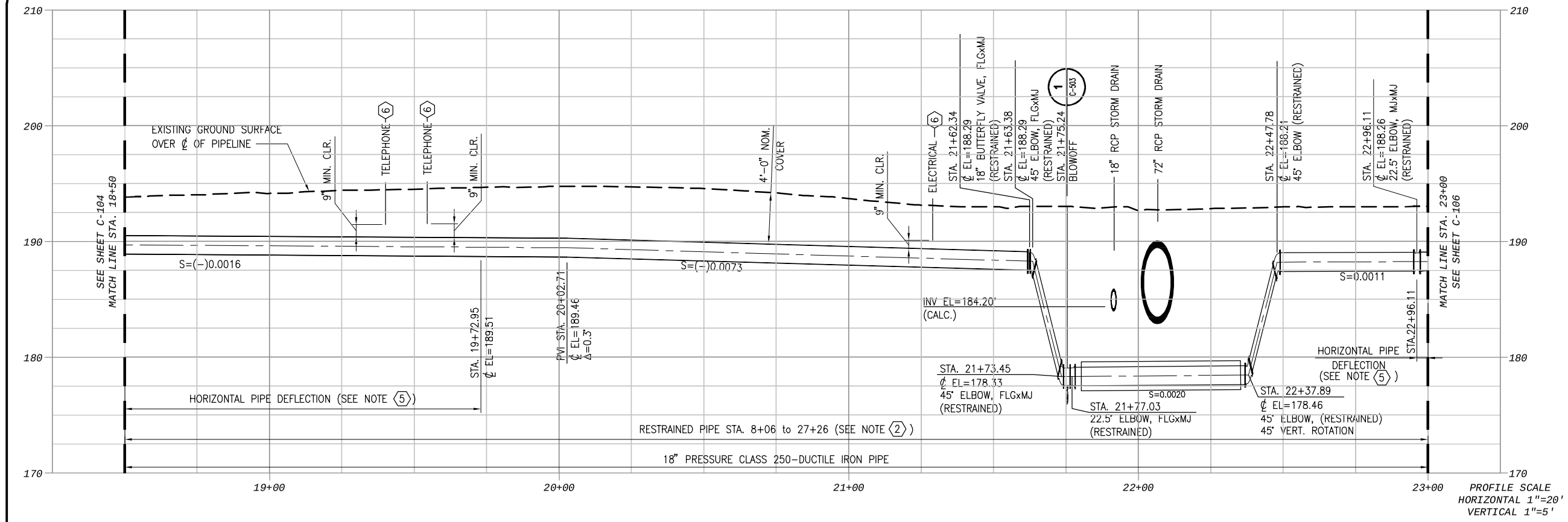

PROFILE SCALE
HORIZONTAL 1"=20'
VERTICAL 1"=5'

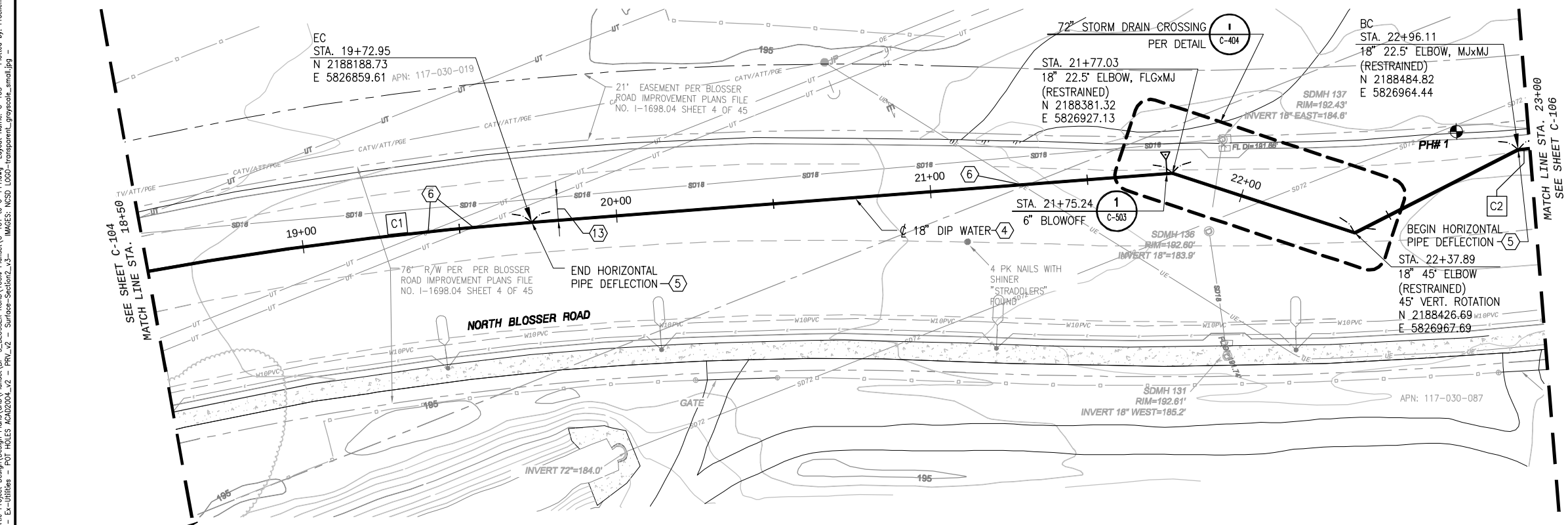

SCALE
0 10 20 40
1 INCH = 20 FEET

CONSTRUCTION NOTES:

(2) INSTALL RESTRAINED JOINT PIPE AND FITTINGS PER SPECIFICATION SECTION 402040.

(4) 18"ø DUCTILE IRON PIPE PER SPECIFICATION SECTION 402040. TRENCH PER DETAIL 3 C-503 AND REPAIR PAVEMENT IN ACCORDANCE WITH 4/C-503 AND CITY OF SANTA MARIA ENCROACHMENT PERMIT.

(5) TO OBTAIN ALIGNMENT DEFLECT PIPE AT JOINTS PER SPECIFICATION SECTION 402040 AND MAUFACTURER'S RECOMMENDATIONS. DO NOT EXCEED 80% OF MANUFACTURER'S RECOMMENDATION.

(6) POTHOLE UTILITY CROSSINGS IN ADVANCE OF WORK. NOTIFY OWNER'S REPRESENTATIVE IF CONFLICTS ARE DISCOVERED.

(13) CONTRACTOR TO POTHOLE 18" STORM DRAIN PRIOR TO CONSTRUCTION. PROVIDE OWNER'S REPRESENTATIVE WITH POTHOLE REPORT. THERE SHALL BE 6-FOOT MINIMUM CLEARANCE BETWEEN THE 18" STORM DRAIN AND THE 18" WATERLINE.

CURVE TABLE				
CURVE	RADIUS	LENGTH	EXTERNAL TANGENT	DELTA
C1	1199.97'	362.66'	182.72	17.316
C2	1356.58'	387.76'	195.21	16.377

811 Know what's **below.** **Call** before you dig.

0 1/2 1
IF THIS BAR DOES NOT MEASURE 1" THEN DRAWING IS NOT TO FULL SCALE

REV	DATE	DESCRIPTION	APPR
		EXP DATE	09/30/2011
		REG NUMBER	C65400
PROJECT ENGINEER		JOSHUA H REYNOLDS	

REGISTERED PROFESSIONAL ENGINEER * JOSHUA H REYNOLDS * No. C65400 * Exp. 9/30/11 * STATE OF CALIFORNIA

AECOM
AECOM USA, Inc.
1194 Pacific Street, Suite 204
San Luis Obispo, California 93401
T 805.542.9840 F 805.542.9990
www.aecom.com

NIPOMO COMMUNITY SERVICES DISTRICT
WATERLINE INTERTIE PROJECT - BP3

PLAN AND PROFILE
STA. 18+50 to STA. 23+00

DESIGNED:	ES
DETAILED:	JPF
CHECKED:	
APPROVED:	
DATE:	JULY 2010
AECOM PROJECT NO.	60061295
NCSD PROJECT NO.	
CADD STDS.	AECOM/BOYLE

C-105
SHEET
8 OF 33

DWG: W:\Nipomo CSD (19996)\19996.70 Waterline Intertie Project Design\Design Plans\CAD\Plansets\BP_3_BLOSSER ROAD\100% Plansets\C-101 to C-111.dwg Layout Name: C-105 -- Plotted by: Froelicher, Jim Date: 7/28/2010 - 5:23 PM
XREFS: NCSD-BD_BP3 -- Agvo points -- WaterlineBase -- Ex-Utilities -- POT HOLES ADA02004_v2 -- PRV_v2 -- Surface-Setfeld_v3 -- MMCES: NCSD LOGO-frontsprent_agvosafe_small.jpg

DWG: W:\Nipomo CSD (1996ft)\199967D Waterline Intertie Project Design\Design Phase\CAD\Plansets\BP-3_BLOSSER ROAD\100% Planset\C-101 to C-111.dwg Layout Name: C-106 — Plotted by: Froelicher, Jim Date: 7/28/2010 - 5:24 PM
XREFS: NCSD-BD_BP3 - Topo points — Waterlocs8new — Ex-Utilities — PDF HOLES AOA02004_v2 — PRV_v2 — Surface-Section2_v3— IMAGES: NCSD_L003-transparent_grayscale_small.jpg —

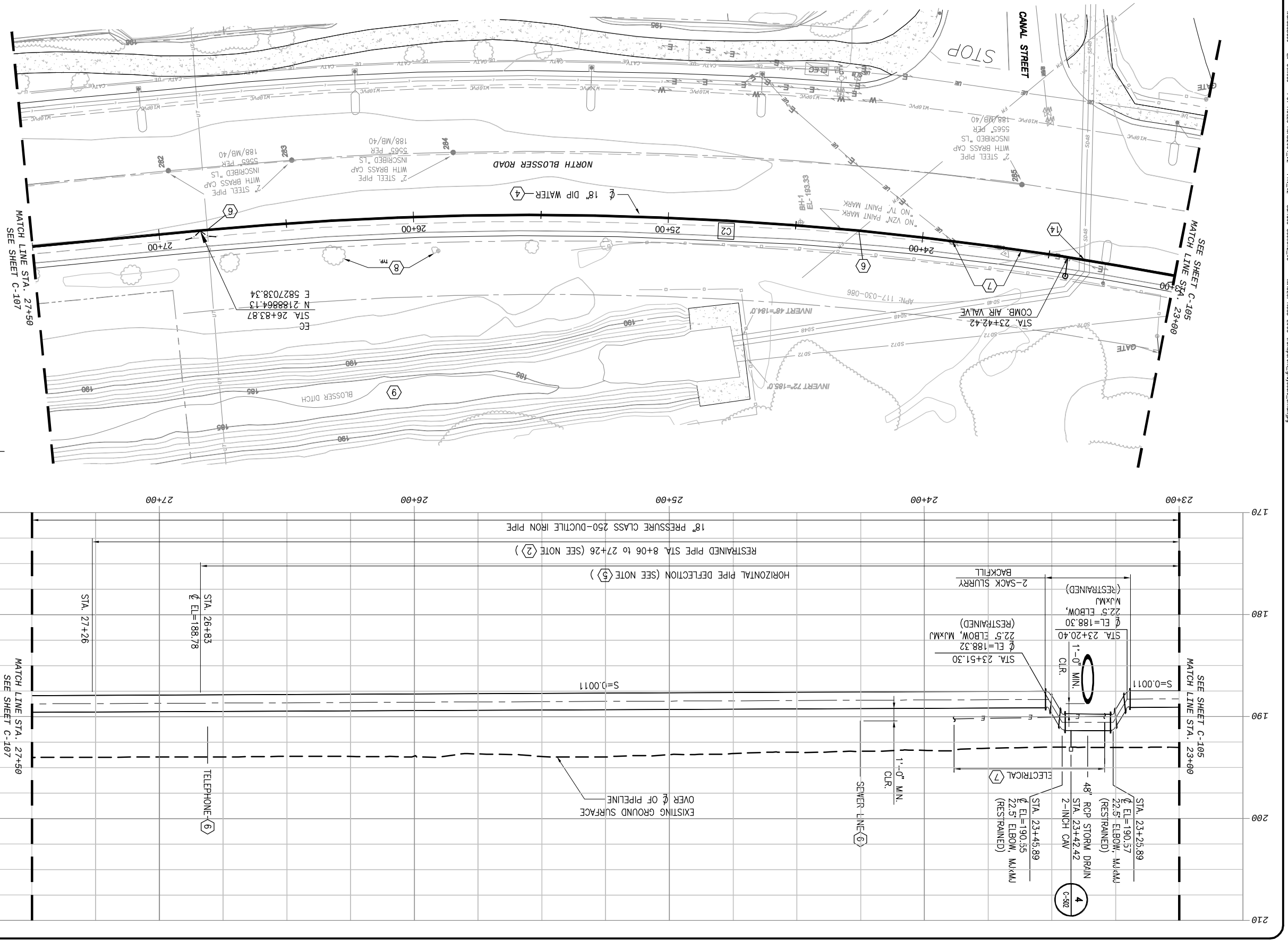

CURVE TABLE				
CURVE	RADIUS	LENGTH	EXTERNAL TANGENT	DELTA
C2	1356.58'	387.79'	195.21	16.377

CONSTRUCTION NOTES:

2. INSTALL RESTRAINED JOINT PIPE AND FITTINGS PER SPECIFICATION SECTION 402040.
4. 18"ø DUCTILE IRON PIPE PER SPECIFICATION SECTION 402040. TRENCH PER DETAIL 3/C-503 AND REPAIR PAVEMENT IN ACCORDANCE WITH 4/C-503 AND CITY OF SANTA MARIA ENCROACHMENT PERMIT.
5. TO OBTAIN ALIGNMENT DEFLECT PIPE AT JOINTS PER SPECIFICATION SECTION 402040 AND MANUFACTURER'S RECOMMENDATIONS. DO NOT EXCEED 80% OF MANUFACTURER'S RECOMMENDATION.
6. POTHOLE UTILITY CROSSINGS IN ADVANCE OF WORK. NOTIFY OWNER'S REPRESENTATIVE IF CONFLICTS ARE DISCOVERED.
7. CONTRACTOR TO POTHOLE PRIOR TO CONSTRUCTION TO VERIFY DEPTH OF ELECTRICAL LINE AND SHALL RELOCATE ELECTRICAL IF IN CONFLICT WITH PROJECT. PROVIDE OWNER'S REPRESENTATIVE WITH POTHOLE REPORT.
8. PROTECT TREES AND LANDSCAPING IN PLACE. TYPICAL.
9. INSTALL SILT AND/OR EXCLUSIONARY FENCING IN CONFORMANCE WITH SPECIFICATION SECTION 011160 AND DIRECTION FROM OWNER'S BIOLOGICAL MONITOR.
14. POTHOLE 48" STORM DRAIN PRIOR TO CONSTRUCTION. LOCATION SHOWN IS APPROXIMATE AND IS BASED ON LOCATIONS OF INLET AND OUTLET AND PHYSICAL INSPECTION FROM INSIDE THE 48" STORM DRAIN.

Know what's **below.** **Call** before you dig.

IF THIS BAR DOES NOT MEASURE 1" THEN DRAWING IS NOT TO FULL SCALE
0 1/2 1

NIPOMO COMMUNITY SERVICES DISTRICT WATERLINE INTERTIE PROJECT - BP3

PLAN AND PROFILE STA. 23+00 to STA. 27+50

AECOM
AECOM USA, Inc.
194 Pacific Street, Suite 204
San Luis Obispo, California 93401
T 805.542.3940 F 805.542.3990
www.aecom.com

REGISTERED PROFESSIONAL ENGINEER — JOSHUA H REYNOLDS — No. C66400 — Exp. 9/30/11 — STATE OF CALIFORNIA

REV	DATE	DESCRIPTION	APPR
4			
3			
2			
1			

PROJECT ENGINEER: JOSHUA H REYNOLDS
REG NUMBER: C66400
EXP DATE: 09/30/2011

DESIGNED: ES
DETAILED: JPF
CHECKED:
APPROVED:
DATE: JULY 2010
AECOM PROJECT NO. 60061296
NCSD PROJECT NO.
CADD STDS. AECOM/BOYLE

SHEET 9 OF 33
C-106

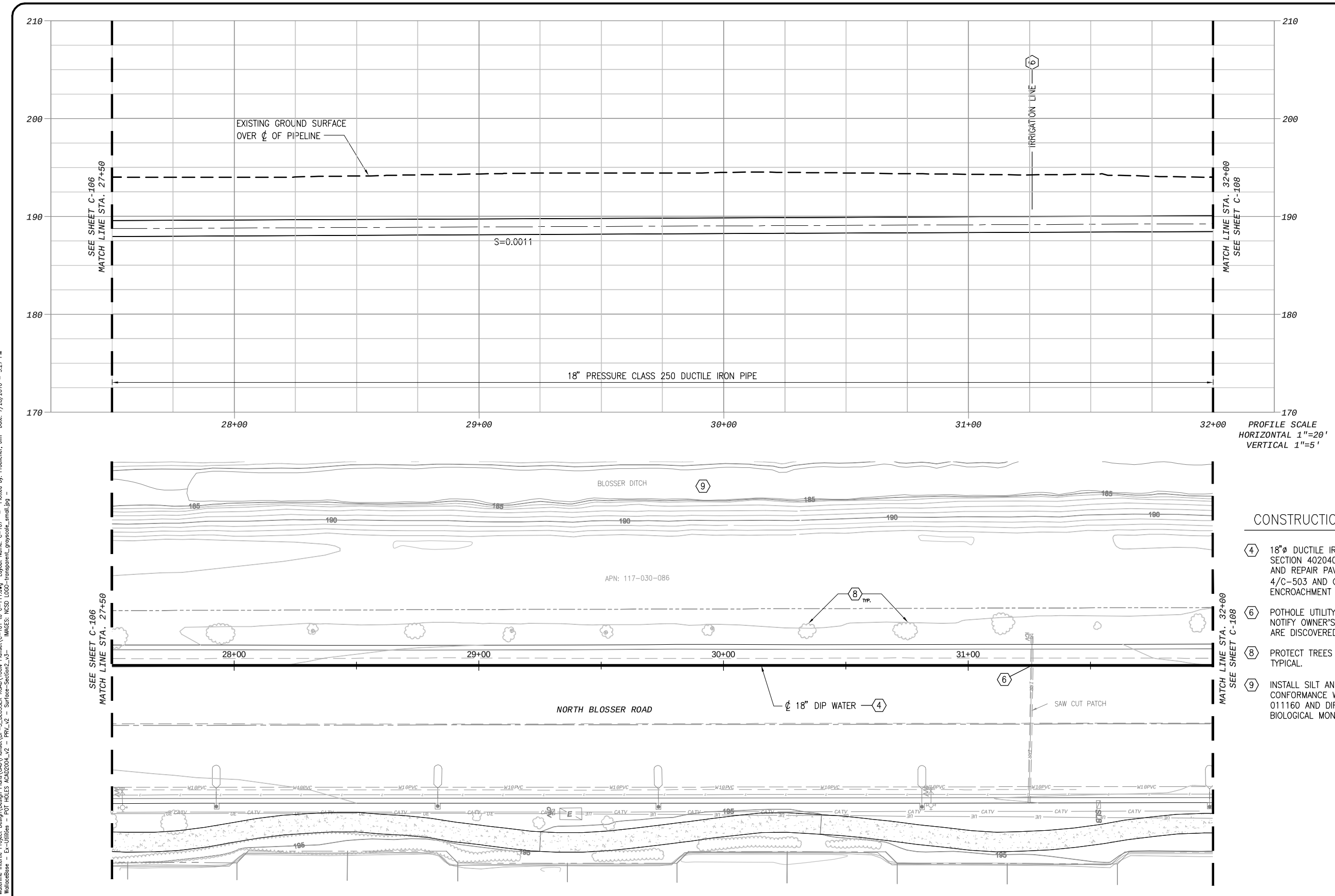

CONSTRUCTION NOTES:

4. 18"ø DUCTILE IRON PIPE PER SPECIFICATION SECTION 402040. TRENCH PER DETAIL 3/C-503 AND REPAIR PAVEMENT IN ACCORDANCE WITH 4/C-503 AND CITY OF SANTA MARIA ENCROACHMENT PERMIT.
6. POTHOLE UTILITY CROSSING IN ADVANCE IF WORK. NOTIFY OWNER'S REPRESENTATIVE IF CONFLICTS ARE DISCOVERED.
8. PROTECT TREES AND LANDSCAPING IN PLACE, TYPICAL.
9. INSTALL SILT AND/OR EXCLUSIONARY FENCING IN CONFORMANCE WITH SPECIFICATION SECTION 011160 AND DIRECTION FROM OWNER'S BIOLOGICAL MONITOR.

SCALE
0 10 20 40
1 INCH = 20 FEET

Know what's **below.** **Call** before you dig.

0 1/2 1
IF THIS BAR DOES NOT MEASURE 1" THEN DRAWING IS NOT TO FULL SCALE

REV	DESCRIPTION	APPR	DATE
PROJECT ENGINEER	REG NUMBER	EXP DATE	
JOSHUA H REYNOLDS	C65400	09/30/2011	

REGISTERED PROFESSIONAL ENGINEER * JOSHUA H REYNOLDS * No. C 65400 * Exp. 9/30/11 * STATE OF CALIFORNIA

AECOM
AECOM USA, Inc.
1194 Pacific Street, Suite 204
San Luis Obispo, California 93401
T 805.542.9840 F 805.542.9990
www.aecom.com

NIPOMO COMMUNITY SERVICES DISTRICT

NIPOMO COMMUNITY SERVICES DISTRICT WATERLINE INTERTIE PROJECT - BP3

PLAN AND PROFILE STA. 27+50 to STA. 32+00

DESIGNED:	ES
DETAILED:	JPF
CHECKED:	
APPROVED:	
DATE:	JULY 2010
AECOM PROJECT NO.	60061295
NCSD PROJECT NO.	
CADD STDS.	AECOM/BOYLE

C-107
SHEET
10 OF 33

DWG: W:\Nipomo CSD (19996)\19996.70 Waterline Intertie Project Design\Design Plans\CAD\Plansets\BP-1_BLOSSER ROAD\100% Planset\C-101 to C-111.dwg Layout Name: C-107 -- Plotted by: Froelicher, Jim Date: 7/28/2010 - 5:27 PM
XREFS: NCSD-BD_BP3 - fagro points - WallaceBase - Ex-Utilities - PVI HILES ACAD2004_v2 - PRV_v2 - Surface-Section2_v3 IMAGES: NCSD LOGO-transparent_grayscale_small.jpg -

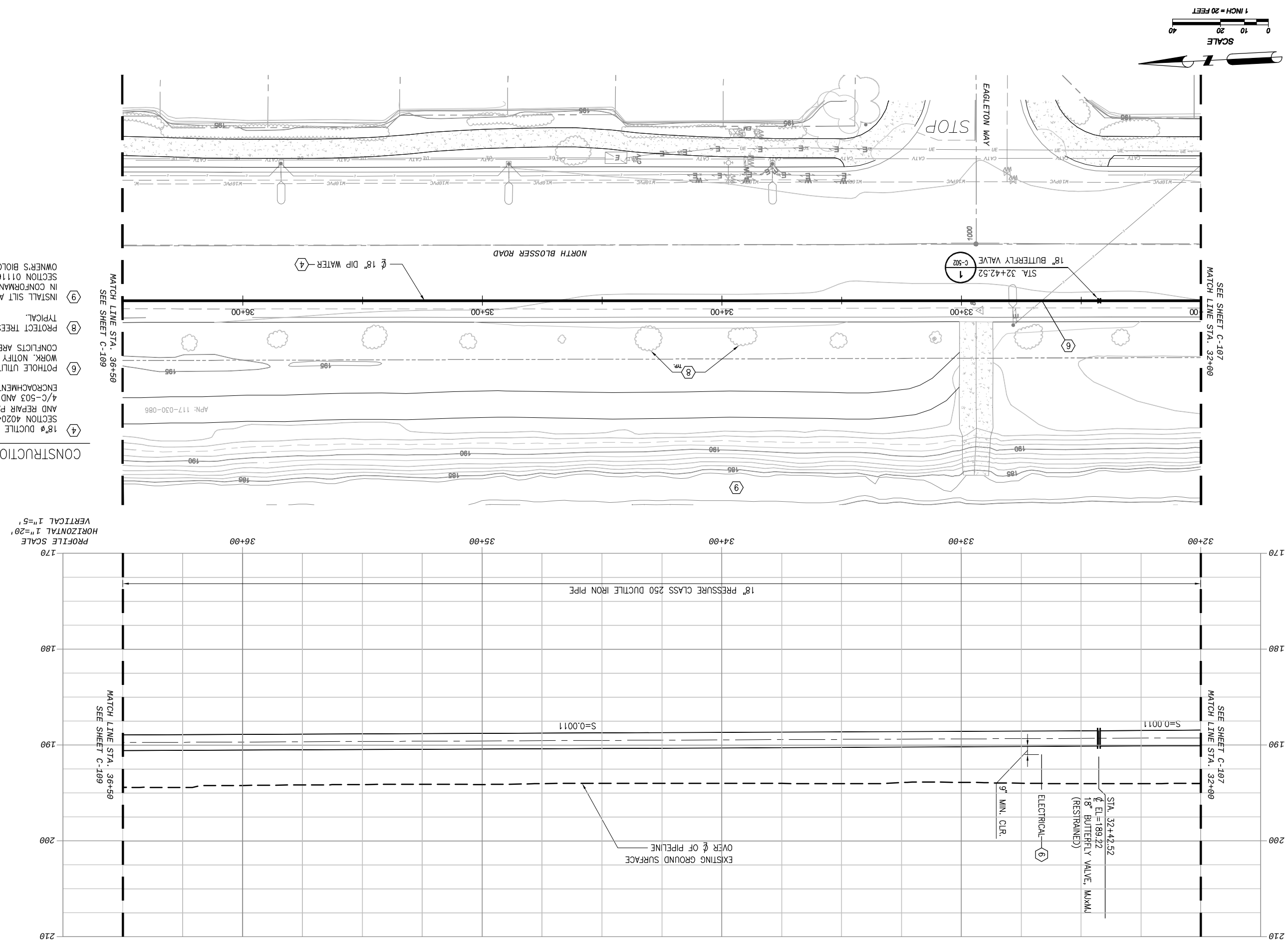

CONSTRUCTION NOTES:

4. 18"ø DUCTILE IRON PIPE PER SPECIFICATION SECTION 402040. TRENCH PER DETAIL 3 C-503 AND REPAIR PAVEMENT IN ACCORDANCE WITH 4/C-503 AND CITY OF SANTA MARIA ENCROACHMENT PERMIT.
6. POTHOLE UTILITY CROSSINGS IN ADVANCE OF WORK. NOTIFY OWNER'S REPRESENTATIVE IF CONFLICTS ARE DISCOVERED.
8. PROTECT TREES AND LANDSCAPING IN PLACE, TYPICAL.
9. INSTALL SILT AND/OR EXCLUSIONARY FENCING IN CONFORMANCE WITH SPECIFICATION SECTION 011160 AND DIRECTION FROM OWNER'S BIOLOGICAL MONITOR.

811 Know what's below. Call before you dig.

IF THIS BAR DOES NOT MEASURE 1" THEN DRAWING IS NOT TO FULL SCALE

DESIGNED: ES
DETAILED: JPF
CHECKED:
APPROVED:
DATE: JULY 2010
AECOM PROJECT NO. 60061295
NCSD PROJECT NO.
CADD STDS. AECOM/BOYLE

C-108
SHEET 11 OF 33

NIPOMO COMMUNITY SERVICES DISTRICT
WATERLINE INTERTIE PROJECT - BP3

PLAN AND PROFILE
STA. 32+00 to STA. 36+50

AECOM USA, Inc.
1194 Pacific Street, Suite 204
San Luis Obispo, California 93401
T 805.542.9840 F 805.542.9990
www.aecom.com

REGISTERED PROFESSIONAL ENGINEER
JOSHUA H. REYNOLDS
No. 65400
Exp. 9/30/11
STATE OF CALIFORNIA
C I V I L

REV	DATE	DESCRIPTION	APPR
4			
3			
2			
1			

PROJECT ENGINEER: JOSHUA H REYNOLDS
REG NUMBER: C65400
EXP DATE: 09/30/2011

DWG: W:\Nipomo CSD (19996)\19996.70 Waterline Intertie Project Design\Design Plans\CAD\Planset\BP-3_BLOSSER ROAD\100% Planset\C-101 to C-111.dwg Layout Name: C-108 - Plotted by: Froelicher, Jim Date: 7/28/2010 - 5:29 PM
XREFS: NCSD-BD_BP3 - fugro points - WallaceBase - Ex-Utilities - POT HOLES ACAD2004_v2 - PRV_v2 - Surface-Section2_v3- IMAGES: NCSD LOGO-transparent_grayscale_small.jpg -

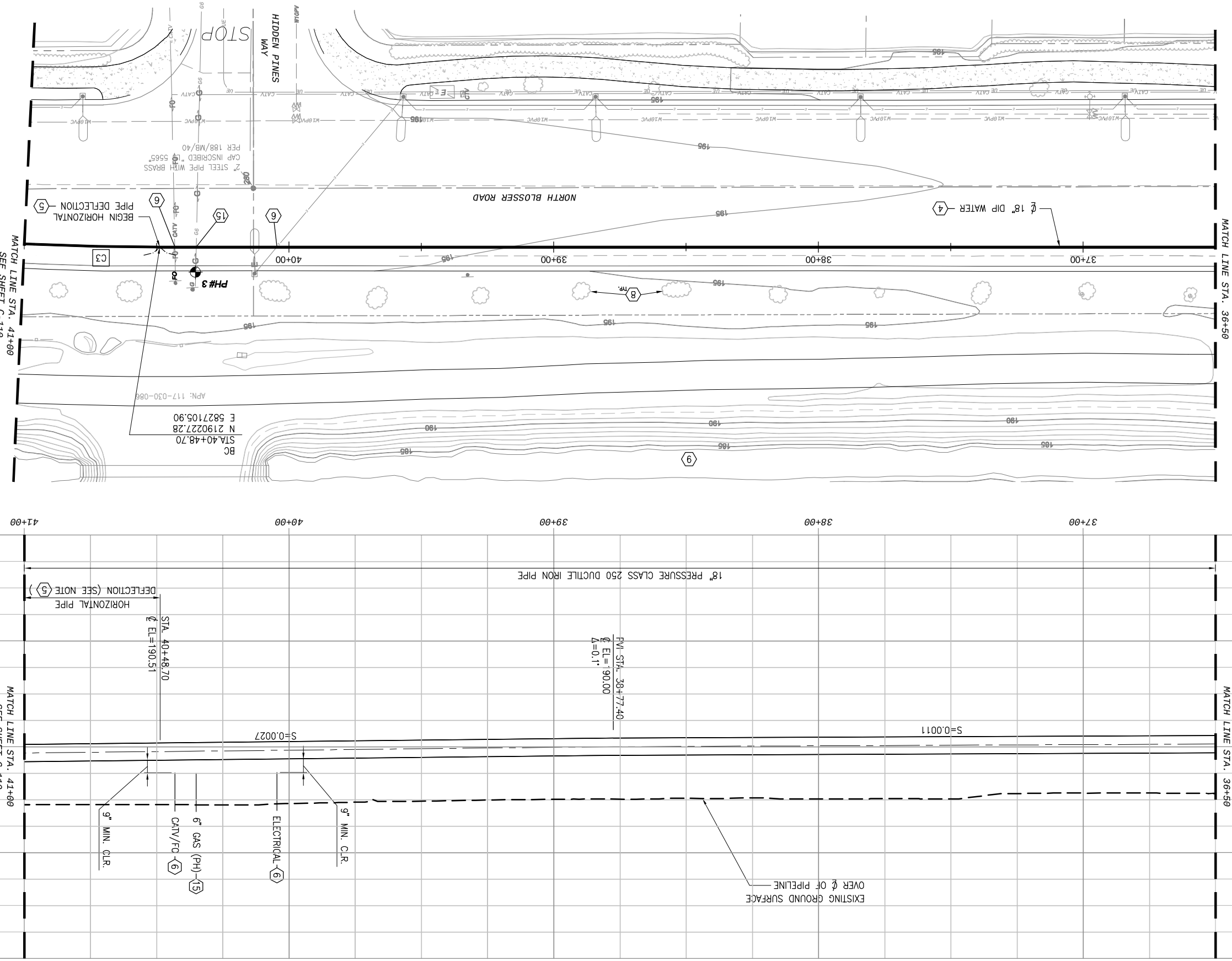

CURVE TABLE

CURVE	RADIUS	LENGTH	EXTERNAL TANGENT	DELTA
C3	1057.07'	166.54'	83.44	9.027

CONSTRUCTION NOTES:

4. 18"ø DUCTILE IRON PIPE PER SPECIFICATION SECTION 402040. TRENCH PER DETAIL 3 C-503 AND REPAIR PAVEMENT IN ACCORDANCE WITH 4/C-503 AND CITY OF SANTA MARIA ENCROACHMENT PERMIT.
5. TO OBTAIN ALIGNMENT DEFLECT PIPE AT JOINTS PER SPECIFICATION SECTION 402040 AND MANUFACTURER'S RECOMMENDATIONS. DO NOT EXCEED 80% OF MANUFACTURER'S RECOMMENDATION.
6. POTHOLE UTILITY CROSSINGS IN ADVANCE OF WORK. NOTIFY OWNER'S REPRESENTATIVE IF CONFLICTS ARE DISCOVERED.
8. PROTECT TREES AND LANDSCAPING IN PLACE, TYPICAL.
9. INSTALL SILT AND/OR EXCLUSIONARY FENCING IN CONFORMANCE WITH SPECIFICATION SECTION 011160 AND DIRECTION FROM OWNER'S BIOLOGICAL MONITOR.
15. COORDINATE WITH GAS COMPANY TO RAISE 6" GAS LINE.

811 Know what's below. Call before you dig.

IF THIS BAR DOES NOT MEASURE 1" THEN DRAWING IS NOT TO FULL SCALE

DESIGNED: ES
DETAILED: JPF
CHECKED:
APPROVED:
DATE: JULY 2010
AECOM PROJECT NO. 60061295
NCSD PROJECT NO.
CADD STDS. AECOM/BOYLE

C-109
SHEET 12 OF 33

NIPOMO COMMUNITY SERVICES DISTRICT
WATERLINE INTERTIE PROJECT - BP3

PLAN AND PROFILE
STA. 36+50 to STA. 41+00

AECOM

AECOM USA, Inc.
1194 Pacific Street, Suite 204
San Luis Obispo, California 93401
T 805.542.9840 F 805.542.9990
www.aecom.com

REGISTERED PROFESSIONAL ENGINEER
JOSHUA H. REYNOLDS
No. 65400
Exp. 9/30/11
STATE OF CALIFORNIA

REV	DATE	DESCRIPTION	APPR
4			
3			
2			
1			

PROJECT ENGINEER: JOSHUA H REYNOLDS
REG NUMBER: C65400
EXP DATE: 09/30/2011

DWG: W:\Nipomo CSD (19996)\19996.70 Waterline Intertie Project Design\Design Plans\CAD\Planset\BP-3_BLOSSER ROAD\100% Planset\C-101 to C-111.dwg Layout Name: C-109 - Plotted by: Froelicher, Jim Date: 7/28/2010 - 5:31 PM
XREFS: NCSD-BD_BP3 - fugro points - WallaceBase - Ex-Utilities - POT HOLES ACAD2004_v2 - PRV_v2 - Surface-Section2_v3- IMAGES: NCSD LOGO-transparent_grayscale_small.jpg -

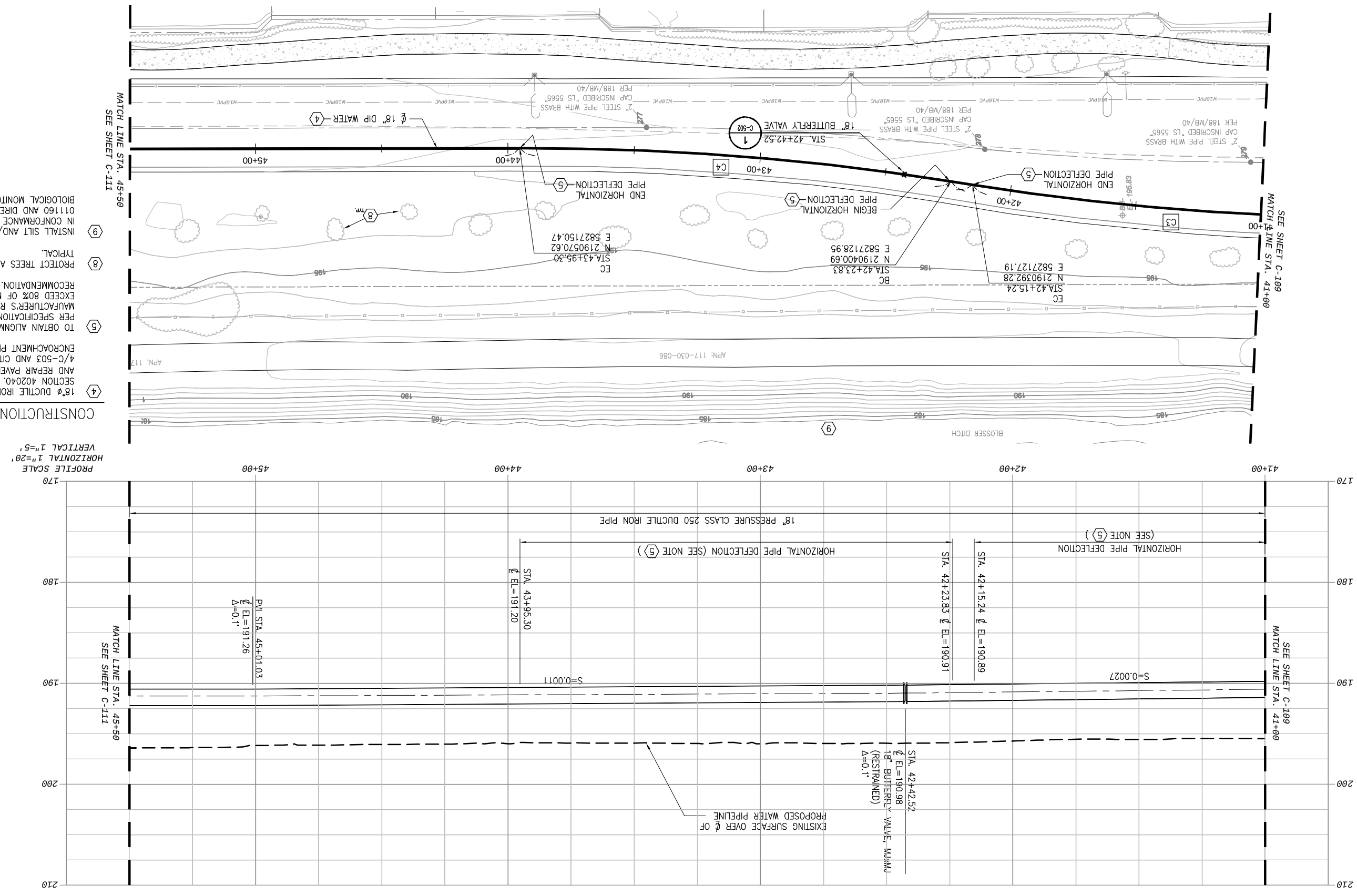

CURVE TABLE				
CURVE	RADIUS	LENGTH	EXTERNAL TANGENT	DELTA
C3	1057.07'	166.54'	83.44	9.027
C4	1057.07'	171.47'	85.93	9.294

CONSTRUCTION NOTES:

4. 18"ø DUCTILE IRON PIPE PER SPECIFICATION SECTION 402040. TRENCH PER DETAIL AND REPAIR PAVEMENT IN ACCORDANCE WITH 4/C-503 AND CITY OF SANTA MARIA ENCROACHMENT PERMIT. (3 C-503)
5. TO OBTAIN ALIGNMENT DEFLECT PIPE AT JOINTS PER SPECIFICATION SECTION 402040 AND MANUFACTURER'S RECOMMENDATIONS. DO NOT EXCEED 80% OF MANUFACTURER'S RECOMMENDATION.
8. PROTECT TREES AND LANDSCAPING IN PLACE, TYPICAL.
9. INSTALL SILT AND/OR EXCLUSIONARY FENCING IN CONFORMANCE WITH SPECIFICATION SECTION 011160 AND DIRECTION FROM OWNER'S BIOLOGICAL MONITOR.

Know what's **below.** **Call before you dig.**

811

IF THIS BAR DOES NOT MEASURE 1" THEN DRAWING IS NOT TO FULL SCALE

SCALE 0 10 20 40 1 INCH = 20 FEET

DWG: W:\Nipomo CSD (19996)\19996.70 Waterline Intertie Project Design\Design Plans\CAD\Planset\BP-3_BLOSSER ROAD\100% Planset\C-101 to C-111.dwg Layout Name: C-110 - Plotted by: Froelicher, Jim Date: 7/28/2010 - 5:34 PM
XREFS: NCSD-BD_BP3 - fugro points - WallaceBase - Ex-Utilities - POT HOLES ACAD2004_v2 - PRV_v2 - Surface-Section2_v3- IMAGES: NCSD LOGO-transparent_grayscale_small.jpg -

DESIGNED: ES
DETAILED: JPF
CHECKED:
APPROVED:
DATE: JULY 2010
AECOM PROJECT NO. 60061295
NCSD PROJECT NO.
CADD STDS. AECOM/BOYLE

C-110
SHEET 13 OF 33

NIPOMO COMMUNITY SERVICES DISTRICT
WATERLINE INTERTIE PROJECT - BP3

PLAN AND PROFILE
STA. 41+00 to STA. 45+50

NIPOMO COMMUNITY SERVICES DISTRICT

AECOM

AECOM USA, Inc.
1194 Pacific Street, Suite 204
San Luis Obispo, California 93401
T 805.542.9840 F 805.542.9990
www.aecom.com

REGISTERED PROFESSIONAL ENGINEER
JOSHUA H. REYNOLDS
No. 65400
Exp. 9/30/11
C I V I L
STATE OF CALIFORNIA

REV	DATE	DESCRIPTION	APPR
4			
3			
2			
1			

PROJECT ENGINEER: JOSHUA H REYNOLDS
REG NUMBER: C65400
EXP DATE: 09/30/2011

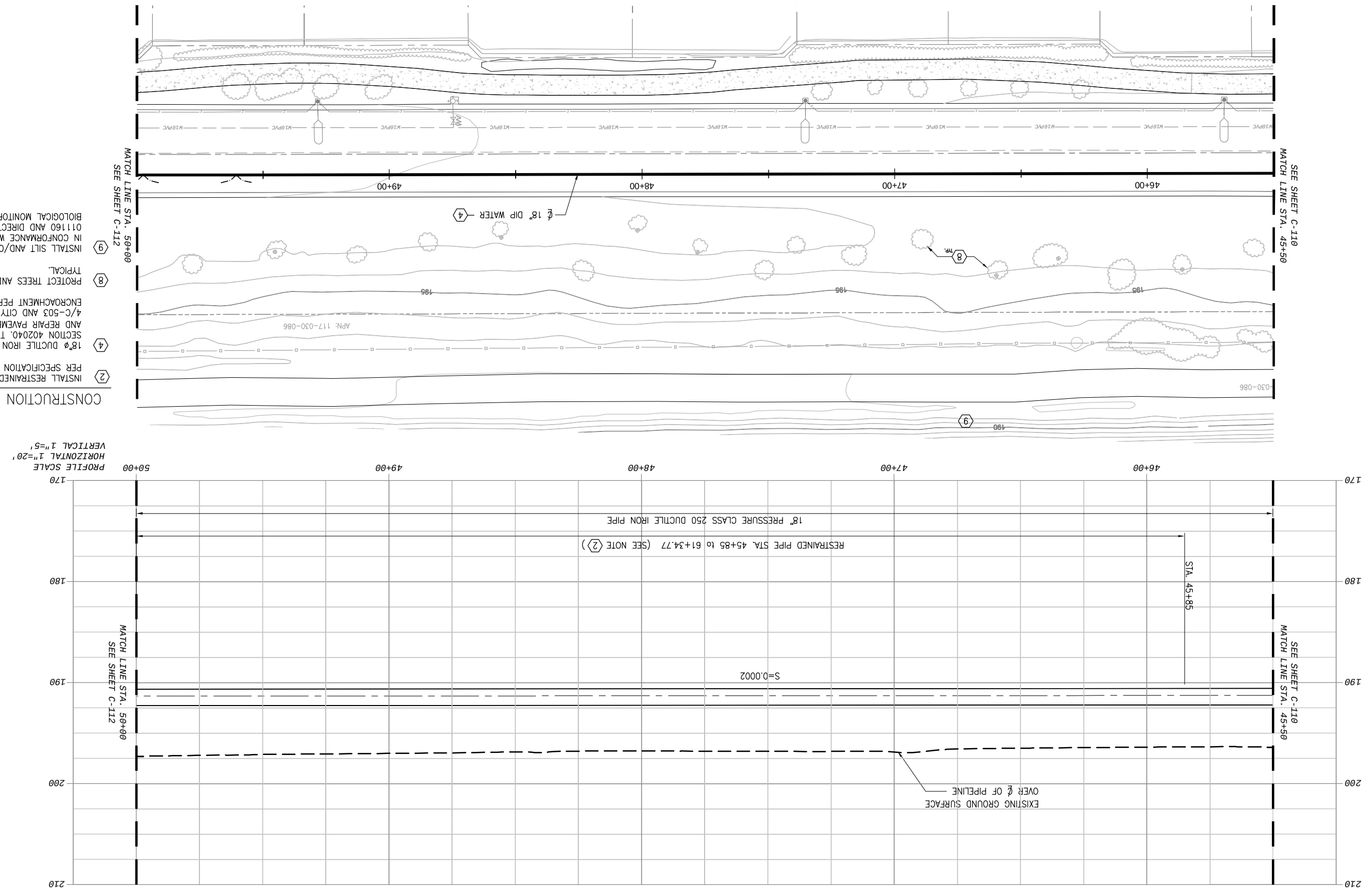

LINE TABLE		
LINE	LENGTH	DIRECTION
L8	1212.77'	N2° 44' 34.25E

811 Know what's **below.** **Call before you dig.**

IF THIS BAR DOES NOT MEASURE 1" THEN DRAWING IS NOT TO FULL SCALE

0 1/2 1

CONSTRUCTION NOTES:

2. INSTALL RESTRAINED JOINT PIPE AND FITTINGS PER SPECIFICATION SECTION 402040.
4. 18"Ø DUCTILE IRON PIPE PER SPECIFICATION SECTION 402040. TRENCH PER DETAIL 3 C-503 AND REPAIR PAVEMENT IN ACCORDANCE WITH 4/C-503 AND CITY OF SANTA MARIA ENCROACHMENT PERMIT.
8. PROTECT TREES AND LANDSCAPING IN PLACE, TYPICAL.
9. INSTALL SILT AND/OR EXCLUSIONARY FENCING IN CONFORMANCE WITH SPECIFICATION SECTION 011160 AND DIRECTION FROM OWNER'S BIOLOGICAL MONITOR.

NIPOMO COMMUNITY SERVICES DISTRICT
WATERLINE INTERTIE PROJECT - BP3

PLAN AND PROFILE
STA. 45+50 to STA. 50+00

DESIGNED: ES
DETAILED: JPF
CHECKED:
APPROVED:
DATE: JULY 2010
AECOM PROJECT NO. 60061295
NCSD PROJECT NO.
CADD STDS. AECOM/BOYLE

C-111
SHEET 14 OF 33

AECOM USA, Inc.
1194 Pacific Street, Suite 204
San Luis Obispo, California 93401
T 805.542.9840 F 805.542.9990
www.aecom.com

AECOM

REGISTERED PROFESSIONAL ENGINEER
JOSHUA H. REYNOLDS
No. 65400
Exp. 9/30/11
C I V I L
STATE OF CALIFORNIA

REV	DATE	DESCRIPTION	APPR
4			
3			
2			
1			

PROJECT ENGINEER	REG NUMBER	EXP DATE
JOSHUA H REYNOLDS	C65400	09/30/2011

DWG: W:\Nipomo CSD (19996)\19996.70 Waterline Intertie Project Design\Design Plans\CAD\Planset\BP-3_BLOSSER ROAD\100% Planset\C-101 to C-111.dwg Layout Name: C-111 - Plotted by: Froelicher, Jim Date: 7/28/2010 - 5:37 PM
XREFS: NCSD-BD_BP3 - fugro points - WallaceBase - Ex-Utilities - POT HOLES ACAD2004_v2 - PRV_v2 - Surface-Section2_v3- IMAGES: NCSD LOGO-transparent_grayscale_small.jpg -

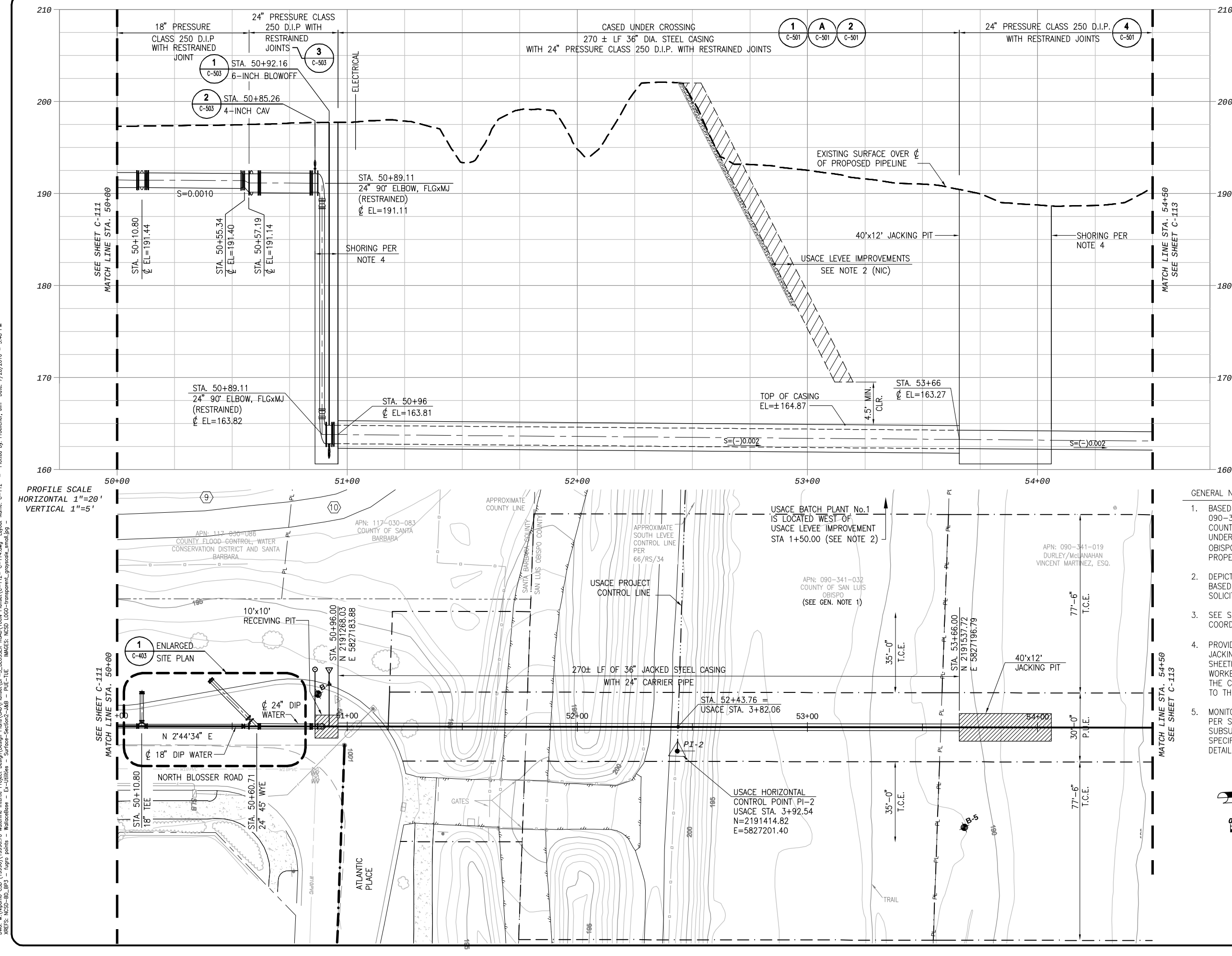

CONSTRUCTION NOTES:

9. INSTALL SILT AND/OR EXCLUSIONARY FENCING IN CONFORMANCE WITH SPECIFICATION SECTION 011160 AND DIRECTION FROM OWNER'S BIOLOGICAL MONITOR.

10. ACCESS ROAD TO LEVEE AND PROPERTIES TO NORTH PER SPECIFICATION SECTION 011100.

GENERAL NOTES:

1. BASED ON RECORD INFORMATION APN: 090-341-032 IS CURRENTLY OWNED BY COUNTY OF SAN LUIS OBISPO. IT IS AECOM'S UNDERSTANDING THAT COUNTY OF SAN LUIS OBISPO HAS PROPOSED TO "QUIT CLAIM" THIS PROPERTY TO COUNTY OF SANTA BARBARA.
2. DEPICTION OF USACE LEVEE IMPROVEMENTS BASED ON PLANS INCLUDED IN USACE SOLICITATION, JULY 1, 2009.
3. SEE SPECIFICATION SECTION 011100 FOR COORDINATION OF WORK.
4. PROVIDE VERTICAL SHEETING/SHORING AT JACKING AND RECEIVING PITS. EXCAVATION SHEETING, SHORING AND BRACING PLANS FOR WORKER PROTECTION SHALL BE DESIGNED BY THE CONTRACTOR'S ENGINEER AND SUBMITTED TO THE OWNER'S REPRESENTATIVE FOR REVIEW.
5. MONITOR GROUND SURFACE FOR MOVEMENT PER SPECIFICATION SECTION 317216. MONITOR SUBSURFACE FOR SETTLEMENT PER SPECIFICATION SECTION 317216 AND PER DETAIL 2/C-501

SCALE
0 10 20 40
1 INCH = 20 FEET

Know what's below. Call before you dig. 811

0 1/2 1
IF THIS BAR DOES NOT MEASURE 1" THEN DRAWING IS NOT TO FULL SCALE

REV	DATE	DESCRIPTION	APPR
		PROJECT ENGINEER JOSHUA H. REYNOLDS	EXP DATE 09/30/2011
		REG NUMBER C65400	

REGISTERED PROFESSIONAL ENGINEER JOSHUA H. REYNOLDS No. C65400 Exp. 9/30/11 STATE OF CALIFORNIA

AECOM
AECOM USA, Inc.
1194 Pacific Street, Suite 204
San Luis Obispo, California 93401
T 805.542.9840 F 805.542.9990
www.aecom.com

NIPOMO COMMUNITY SERVICES DISTRICT

WATERLINE INTERTIE PROJECT - BP3

LEVEE BORE AND JACK PLAN AND PROFILE STA. 50+00 to 54+50

DESIGNED:	CR
DETAILED:	JPF
CHECKED:	
APPROVED:	
DATE:	JULY 2010
AECOM PROJECT NO.	60061295
NCSD PROJECT NO.	
CADD STDS.	AECOM/BOYLE

C-112
SHEET
15 OF 33

DWG: W:\Nipomo CSD (19996)\19996.70 Waterline Intertie Project Design\Design Plans\CAD\Planset\BP-3_BLOSSER ROAD\100% Planset\C-112_ C-114.dwg Layout Name: C-112 - Plotted by: Froelicher, Jim Date: 7/26/2010 - 3:48 PM
XREFS: NCSD-BD_BP3 - Layout points - WaterlineBase - Ex-Utilities - Surface-Section2-4AB - PUE-TIE IMAGES: NCSD LOGO-transparent_grayscale_small.jpg

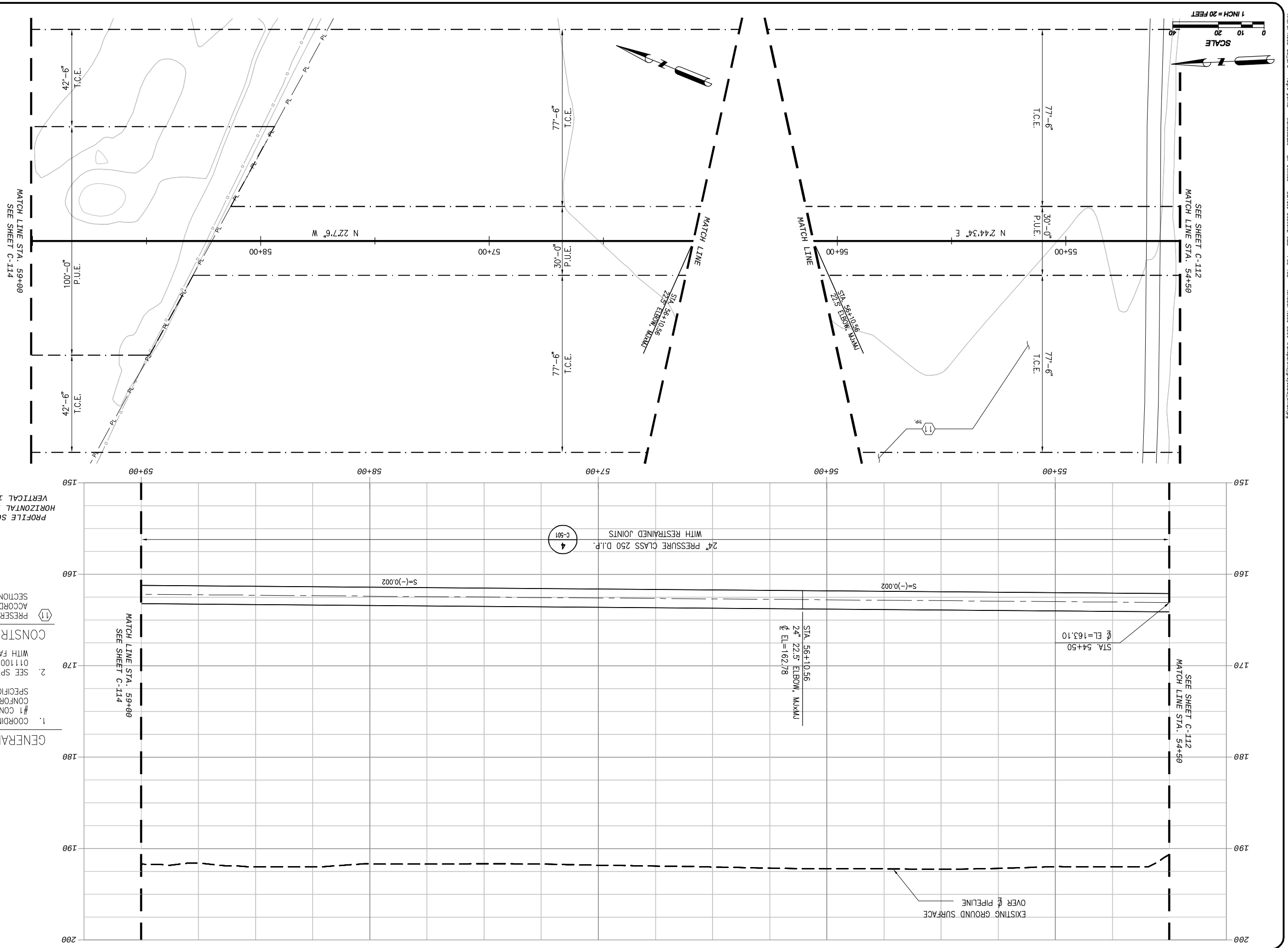

GENERAL NOTES:

1. COORDINATE WITH BID PACKET #1 CONTRACTOR IN CONFORMANCE WITH SPECIFICATION SECTION 011100.
2. SEE SPECIFICATION SECTION 011100 FOR COORDINATION WITH FARM WORK.

CONSTRUCTION NOTES:

(11) PRESERVE TOP SOIL IN ACCORDANCE WITH SPECIFICATION SECTION 011160.

811 Know what's below. Call before you dig.

IF THIS BAR DOES NOT MEASURE 1" THEN DRAWING IS NOT TO FULL SCALE

0 1/2 1

SCALE 1 INCH = 20 FEET

0 10 20 40

NIPOMO COMMUNITY SERVICES DISTRICT
WATERLINE INTERTIE PROJECT - BP3

LEVEE BORE AND JACK
PLAN AND PROFILE
STA. 54+50 to 59+00

DESIGNED: CR
DETAILED: JPF
CHECKED:
APPROVED:
DATE: JULY 2010
AECOM PROJECT NO. 60061295
NCSD PROJECT NO.
CADD STDS. AECOM/BOYLE

C-113
SHEET 16 OF 33

AECOM USA, Inc.
1194 Pacific Street, Suite 204
San Luis Obispo, California 93401
T 805.542.9840 F 805.542.9990
www.aecom.com

AECOM

REGISTERED PROFESSIONAL ENGINEER
JOSHUA H. REYNOLDS
No. C65400
Exp. 9/30/11
STATE OF CALIFORNIA

REV	DATE	DESCRIPTION	APPR
4			
3			
2			
1			

PROJECT ENGINEER: JOSHUA H. REYNOLDS
REG NUMBER: C65400
EXP DATE: 09/30/2011

DWG: W:\Nipomo CSD (19996)\19996.70 Waterline Intertie Project Design\Design Plans\CAD\Planset\BP-3_BLOSSER ROAD\100% Planset\C-112- C-114.dwg Layout Name: C-113 - Plotted by: Froelicher, Jim Date: 7/28/2010 - 2:59 PM
XREFS: NCSD-BD_BP3 - fugro points - WallaceBase - Ex-Utilities - Surface-Section2-&&B - PUE-TUE IMAGES: NCSD LOGO-transparent_grayscale_small.jpg -

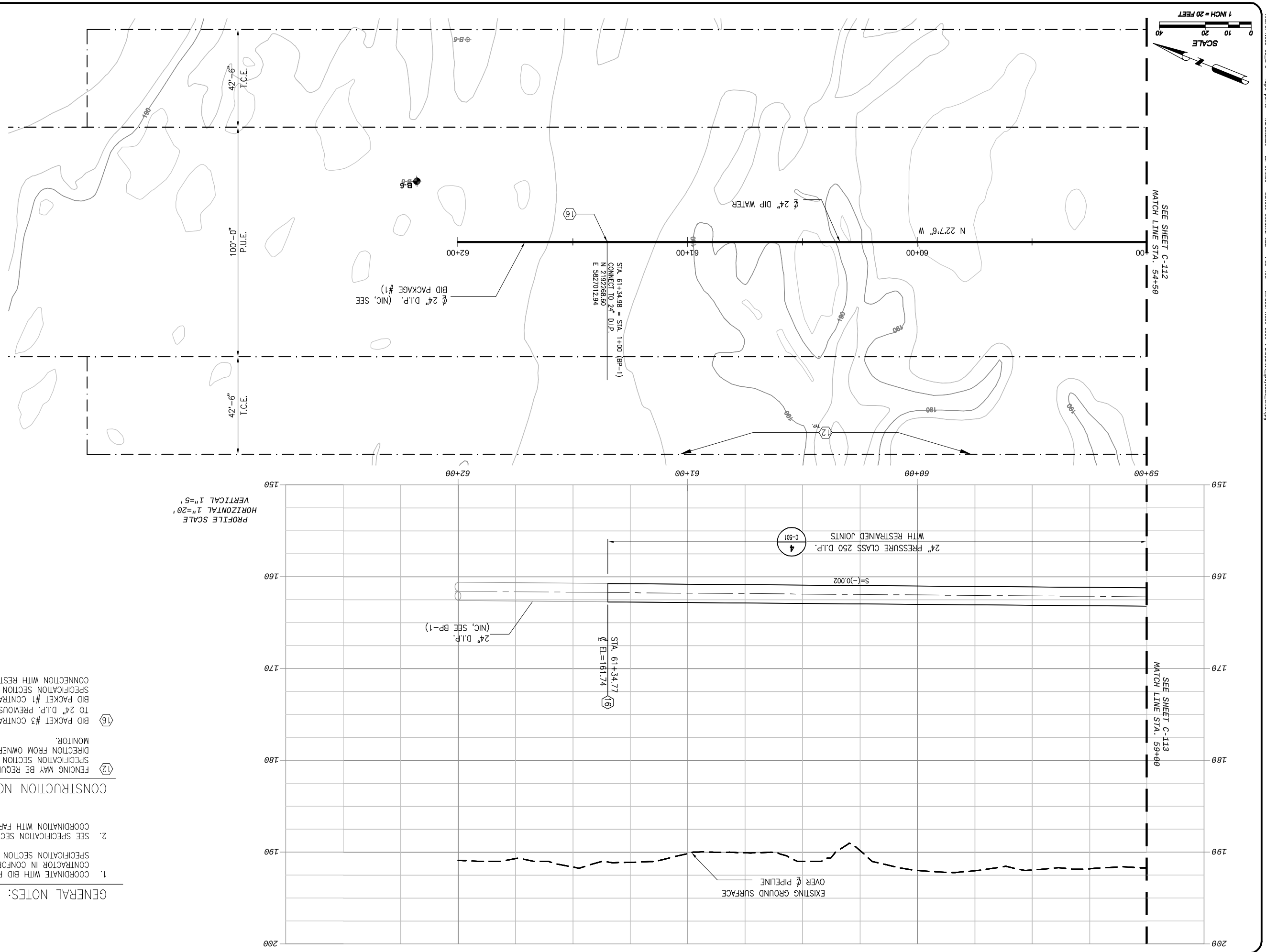

GENERAL NOTES:

1. COORDINATE WITH BID PACKET #1 CONTRACTOR IN CONFORMANCE WITH SPECIFICATION SECTION 011100.
2. SEE SPECIFICATION SECTION 011100 FOR COORDINATION WITH FARM WORK.

CONSTRUCTION NOTES:

(12) FENCING MAY BE REQUIRED. SEE SPECIFICATION SECTION 011160 AND DIRECTION FROM OWNER'S BIOLOGICAL MONITOR.

(16) BID PACKET #3 CONTRACTOR TO CONNECT TO 24" D.I.P. PREVIOUSLY INSTALLED BY BID PACKET #1 CONTRACTOR. SEE SPECIFICATION SECTION 011100. MAKE CONNECTION WITH RESTRAINED COUPLING.

811 Know what's **below.** **Call before you dig.**

IF THIS BAR DOES NOT MEASURE 1" THEN DRAWING IS NOT TO FULL SCALE

0 1/2 1

DESIGNED: CR/ES
DETAILED: JPF
CHECKED:
APPROVED:
DATE: JULY 2010
AECOM PROJECT NO. 60061295
NCSD PROJECT NO.
CADD STDS. AECOM/BOYLE

C-114
SHEET 17 OF 33

NIPOMO COMMUNITY SERVICES DISTRICT
WATERLINE INTERTIE PROJECT - BP3

LEVEE BORE AND JACK PLAN AND PROFILE STA. 59+000 to 62+00

AECOM USA, Inc.
1194 Pacific Street, Suite 204
San Luis Obispo, California 93401
T 805.542.9840 F 805.542.9990
www.aecom.com

AECOM

REGISTERED PROFESSIONAL ENGINEER
Joshua H. Reynolds
No. 65400
Exp. 9/30/11
STATE OF CALIFORNIA
CIVIL

REV	DATE	DESCRIPTION	APPR
4			
3			
2			
1			

PROJECT ENGINEER	REG NUMBER	EXP DATE
JOSHUA H. REYNOLDS	C65400	09/30/2011

DWG: W:\Nipomo CSD (19996)\19996.70 Waterline Intertie Project Design\Design Plans\CAD\Planset\BP-3_BLOSSER ROAD\100% Planset\C-112- C-114.dwg Layout Name: C-114 - Plotted by: Froelicher, Jim Date: 7/28/2010 - 3:02 PM
XREFS: NCSD-BD_BP3 - fugro points - WallaceBase - Ex-Utilities - Surface-Section2-&&B - PUE-TUE IMAGES: NCSD LOGO-transparent_grayscale_small.jpg -

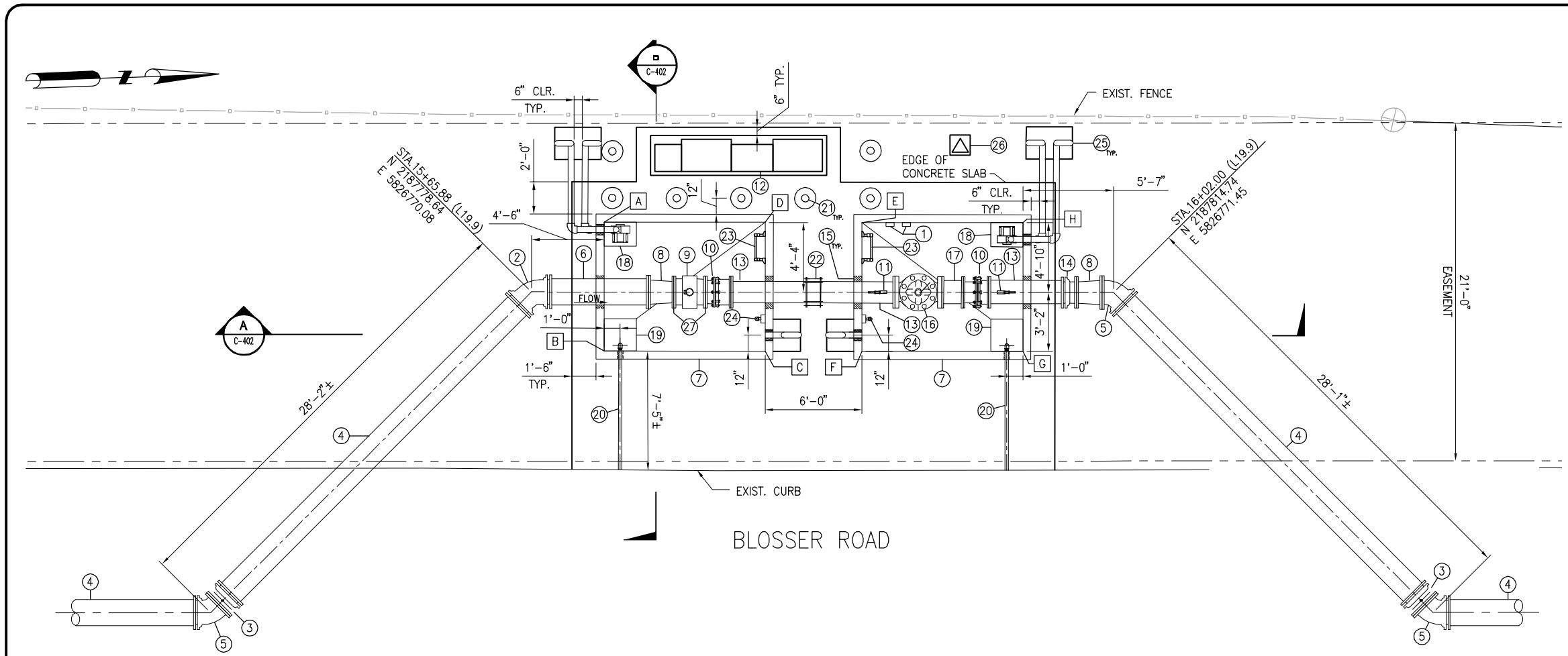

NOTES:

1. ALL PIPE TO BE RESTRAINED.

FLOW METER VAULT

SCALE: 1/4" = 1'-0"

1 / C-104

MATERIALS LIST

1. PRESSURE TRANSMITTERS PER DETAIL — 3 / N-502
2. 18" 45° ELBOW, MJxMJ (RESTRAINED)
3. 18" BUTTERFLY VALVE, FLGxMJ (RESTRAINED)
4. 18"ø D.I. WATER PIPE
5. 18" 45° ELBOW, FLGxMJ (RESTRAINED)
6. 18" D.I.P SPOOL, FLGxPE
7. 10'-0" X 8'-0" (ID) PRECAST CONCRETE VAULT PER SPECIFICATION SECTION 034220.
8. 18"x16" REDUCER, FLG'D
9. 16" MAGNETIC FLOW METER PER SPECIFICATION SECTION 409115.
10. 16" DISMANTLING JOINT PER SPECIFICATION SECTION 400722.
11. 4½" PRESSURE GAUGE AND TRANSMITTER PER DETAIL — 4 / C-504
12. CONCRETE PAD-MOUNTED CONTROL AND ELECTRICAL PANELS, SEE SHEETS E-101 & E-102
13. 16"ø D.I.P. SPOOL FLGxPE
14. 16" MJxFLG ADAPTER (RESTRAINED)
15. WALL PENETRATION PER DETAIL — 3 / -
16. 16" REDUCED PORT ELECTRONIC FLOW CONTROL VALVE PER SPECIFICATION SECTION 400570.
17. 16"ø D.I.P. SPOOL, FLG'D
18. EXHAUST FAN SYSTEM PER DETAIL — 5 / C-504
19. SUMP PER DETAIL — 1 / C-402
20. 4" D.I. SIDEWALK DRAIN PIPE PER CITY OF SANTA MARIA STANDARD DRAWING DR-13
21. REMOVABLE BOLLARDS PER DETAIL — 2 / C-504
22. 16" FLEXIBLE COUPLER (RESTRAINED) PER SPECIFICATION SECTION 400722
23. POLYPROPYLENE VAULT LADDER WITH PULL-UP HANDRAIL BY LANE INTERNATIONAL CORPORATION OR APPROVED EQUAL AND PER SPECIFICATION SECTION 055300.
24. FLOOD SWITCH PER DETAIL — 1 / C-504
25. 4"ø AIR VENT PER DETAIL — 6 / C-504
26. ANTENNA MAST PER DETAIL — 1 / N-502
27. FLANGE INSULATION KIT PER DETAIL — 6 / C-502

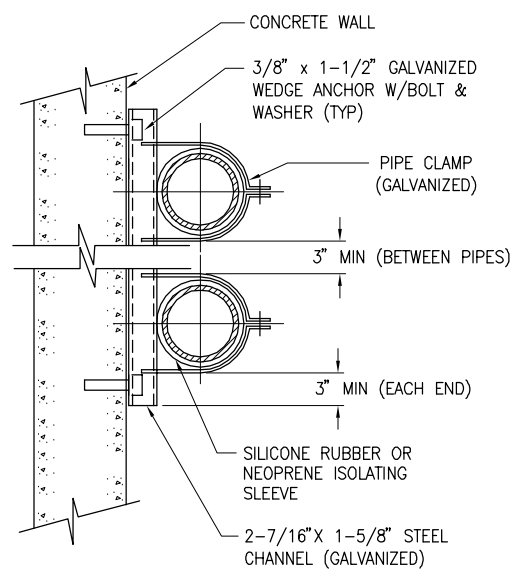

STEEL CHANNEL WALL PIPE SUPPORT

NOT TO SCALE

2 / -

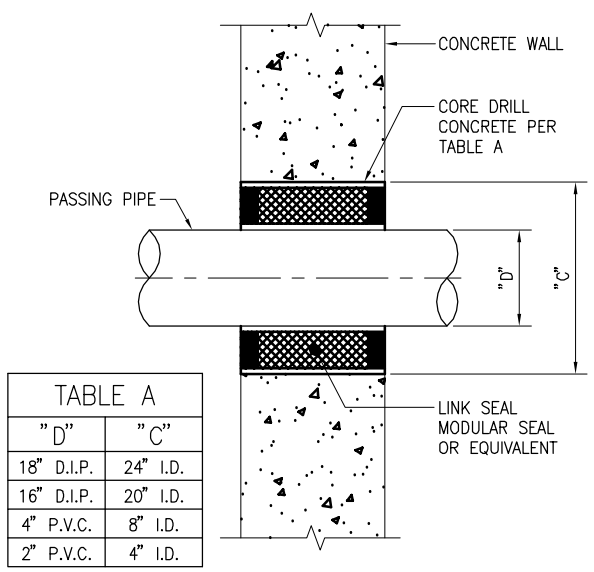

TABLE A	
"D"	"C"
18" D.I.P.	24" I.D.
16" D.I.P.	20" I.D.
4" P.V.C.	8" I.D.
2" P.V.C.	4" I.D.

WALL PENETRATION

NOT TO SCALE

3 / -

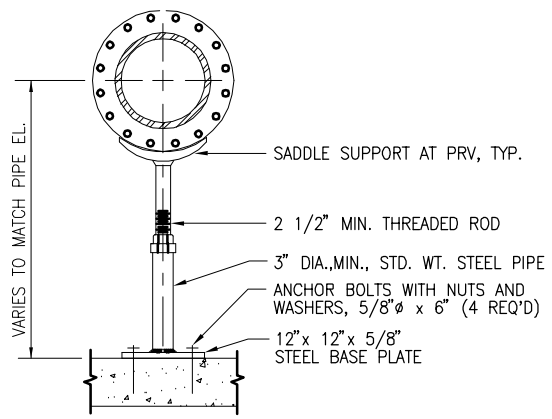

NOTES:

1. COAT WITH SYSTEM 10 PER SPECIFICATION SECTION 099000.
2. ALL BOLTS, NUTS AND WASHERS SHALL BE TYPE 316 STAINLESS STEEL.

PIPE SUPPORT

NOT TO SCALE

4 / -

COORDINATES			
ITEM	NORTHING	EASTING	DESCRIPTION
A	2187783.30	5826765.92	SW INSIDE CORNER METERING VAULT
B	2187783.00	5826773.91	SE INSIDE CORNER METERING VAULT
C	2187792.99	5826774.29	NE INSIDE CORNER METERING VAULT
D	2187793.30	5826766.30	NW INSIDE CORNER METERING VAULT
E	2187799.29	5826766.53	SW INSIDE CORNER CONTOL VALVE VAULT
F	2187798.99	5826774.53	SE INSIDE CORNER CONTOL VALVE VAULT
G	2187808.98	5826774.91	NE INSIDE CORNER CONTOL VALVE VAULT
H	2187809.29	5826766.92	NW INSIDE CORNER CONTOL VALVE VAULT

0 1/2 1

IF THIS BAR DOES NOT MEASURE 1" THEN DRAWING IS NOT TO FULL SCALE

REV	DATE	DESCRIPTION	APPR
PROJECT ENGINEER		REF NUMBER	EXP DATE
JOSHUA H. REYNOLDS		C65-400	09/30/2011

PROFESSIONAL ENGINEER * CIVIL * STATE OF CALIFORNIA * Joshua H. Reynolds No. 65400 Exp. 9/30/11

AECOM
AECOM USA, Inc.
1194 Pacific Street, Suite 204
San Luis Obispo, California 93401
T 805.542.9840 F 805.542.9990
www.aecom.com

NIPOMO COMMUNITY SERVICES DISTRICT

NIPOMO COMMUNITY SERVICES DISTRICT
WATERLINE INTERTIE PROJECT - BP3

FLOW CONTROL VALVE AND METERING STATION

DESIGNED:	ES
DETAILED:	JPF
CHECKED:	
APPROVED:	
DATE:	JULY 2010
AECOM PROJECT NO.	60061295
NCSD PROJECT NO.	
CADD STDS.	AECOM/BOYLE

C-401
SHEET 18 OF 33

DWG: W:\Nipomo CSD (19996)\19996.70 Waterline Intertie Project Design\Design Plans\CAD\Plansets\BP-3_BLOSSER ROAD\100% Plansets\C-401 to C-402.dwg Layout Name: C-401 - Plotted by: Frostcher, Jim Date: 7/28/2010 - 1:33 PM
XREFS: WallaceBase - Surface-Section2 - NCSD-BD_BP3 - PRV_v2 MAGSS. 18BY-MAVFI.png - Barnes Pump.png - NCSD LOGO-transparent_grayscale_small.jpg -

DWG: W:\Nipomo_CSD_(1996fe)\1996fe70_Waterline_Intertie_Project\Design\Design_Plans\CAD\BP-3_BLOSSER_ROAD\1002E_Plotset\C-401_to_C-402.dwg Layout Name: C-402 - Plotted by: Froelicher, Jim Date: 7/28/2010 - 1:40 PM
XREFS: WellsiteBase - Surface-Section2 - WDSR-BD_BP3 - PRN_v2 IMAGES: 1885V-MAVI.png - Barnes Pump.png - WDSR-LOGO-Incorporated_grayscale_small.jpg -

SECTION

SCALE: 1/2" = 1'-0"

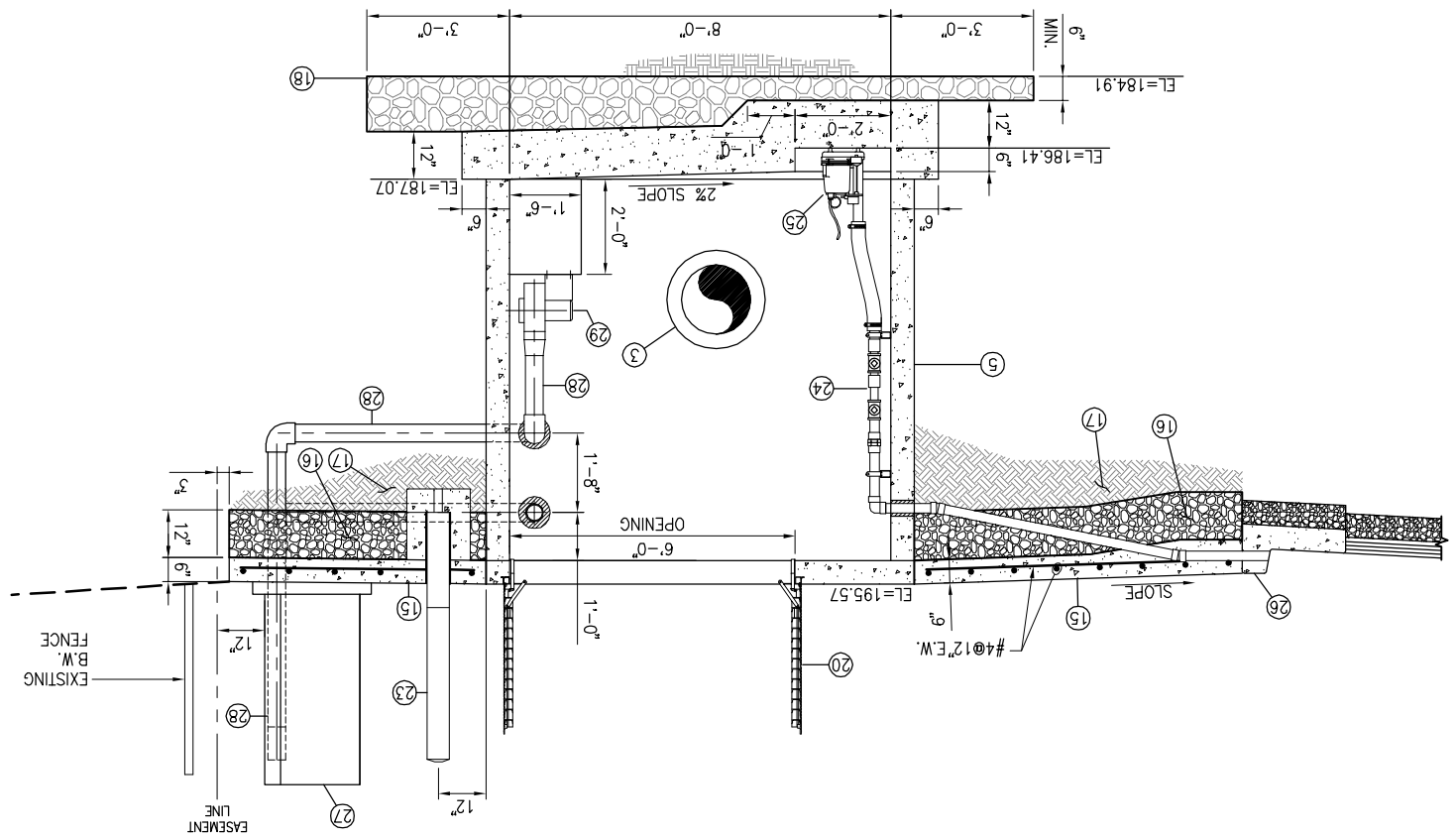

SECTION

SCALE: 1/2" = 1'-0"

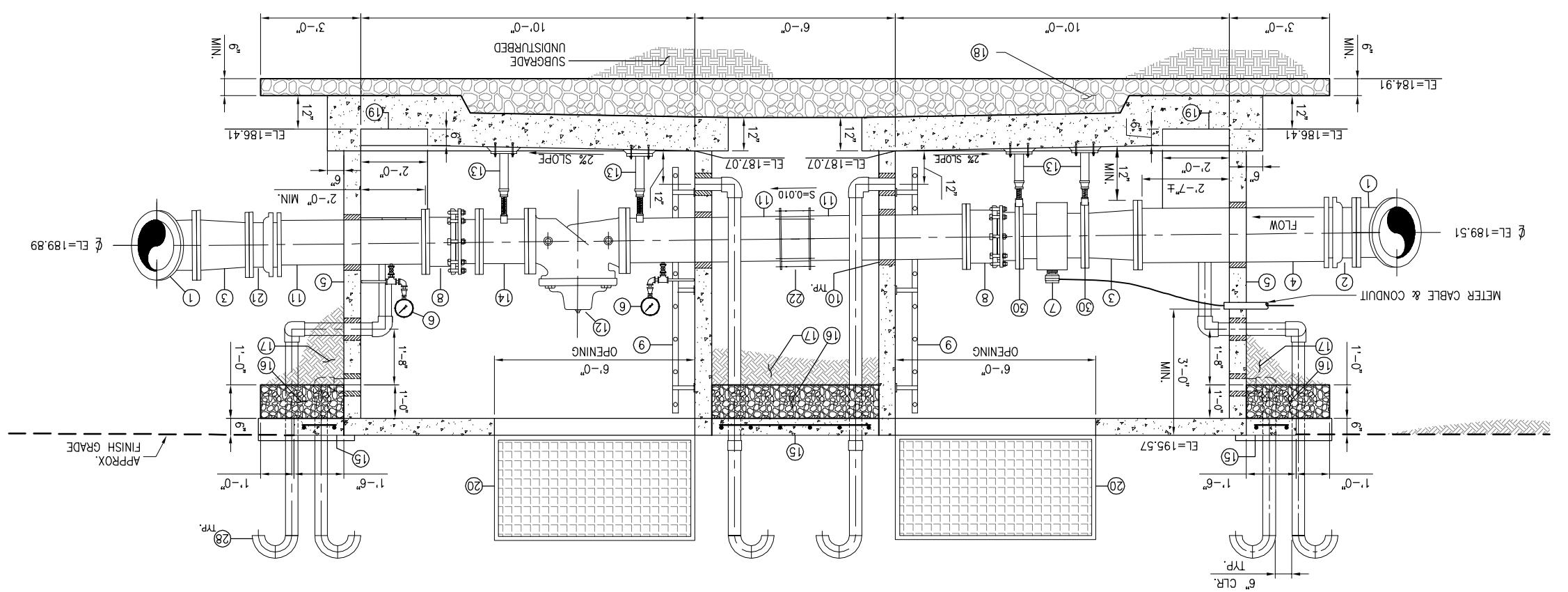

SUMP PUMP

NOT TO SCALE

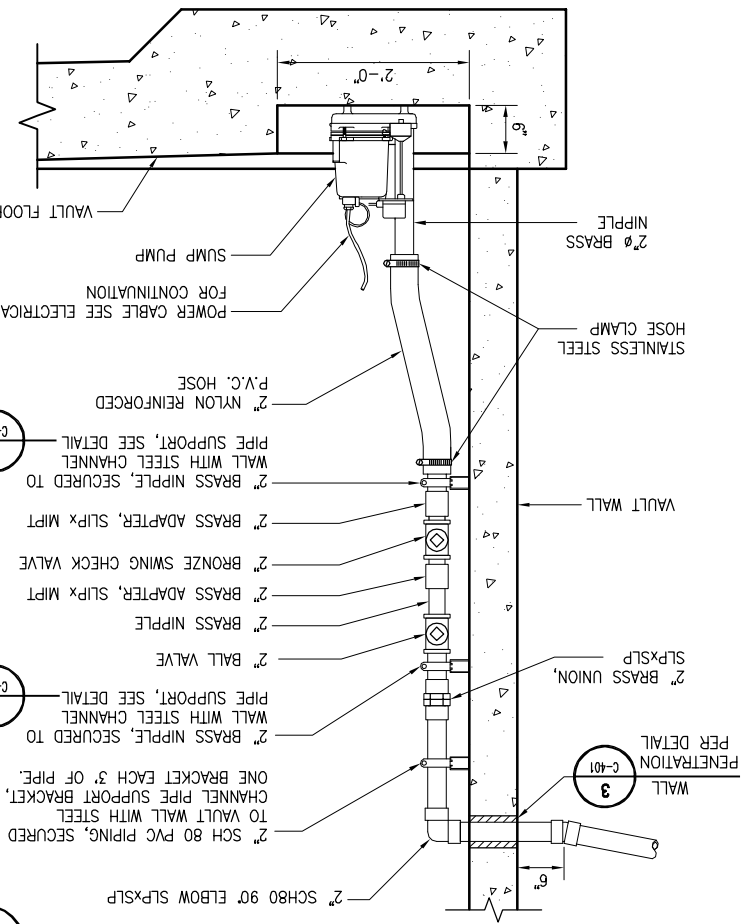

NOTES:

1. ALL PIPE TO BE RESTRAINED.

MATERIALS LIST

①	18" 45° ELBOW, FLG'D (RESTRAINED)	
②	18" MJxFLG ADAPTER (RESTRAINED)	
③	18"x16" REDUCER, FLG'D	
④	18"ø D.I.P. SPOOL, PExFLG	
⑤	10'-0" X 8'-0" (ID) PRECAST CONCRETE VAULT PER SPECIFICATION SECTION 034220	
⑥	4½" PRESSURE GAUGE AND TRANSMITTER PER DETAIL	C-504 (4)
⑦	16" MAGNETIC FLOW METER PER SPECIFICATION SECTION 409115	
⑧	16" DISMANTLING JOINT PER SPECIFICATION SECTION 400722	
⑨	POLYPROPYLENE VAULT LADDER WITH PULL-UP HANDRAIL BY LANE INTERNATIONAL CORPORATION OR APPROVED EQUAL, PER SPECIFICATION SECTION 055300	
⑩	WALL PENETRATION PER DETAIL	C-401 (3)
⑪	16"ø D.I.P. SPOOL FLGxPE	
⑫	16" REDUCED PORT ELECTRONIC FLOW CONTROL VALVE PER SPECIFICATION SECTION 400570	
⑬	PIPE SUPPORT PER DETAIL	C-401 (4)
⑭	16"ø D.I.P. SPOOL, FGL'D	
⑮	CONCRETE SLAB PER DETAIL	C-504 (3)
⑯	12" CLASS II AGGREGATE BASE. COMPACTED TO 95% RELATIVE COMPACTION.	
⑰	BACKFILL COMPACTED TO 95% RELATIVE COMPACTION	
⑱	CLEAN COMPACTED CRUSHED ROCK, WRAPPED ALL SIDES WITH FILTER FABRIC, PER SPECIFICATION SECTION 312323	
⑲	SUMP PER DETAIL	(1)
⑳	6'-0" x 6'-0" DOUBLE LEAF ALUMINUM TRAFFIC RATED ACCESS HATCH PER SPECIFICATION SECTION 055300	
㉑	16" MJxFLG ADAPTER (RESTRAINED)	
㉒	16" FLEXIBLE COUPLER (RESTRAINED)	
㉓	REMOVABLE BOLLARD PER DETAIL	C-504 (2)
㉔	2"ø PVC (SCH80) DRAIN PIPE PER DETAIL	(1)
㉕	SUBMERSIBLE SUMP PUMP, INTEGRAL FLOAT OPERATED DESIGN PARAMETERS: 30gpm AT 10ft TDH, ½hp, 115V, MYERS SSM331PV1C OR APPROVED EQUAL	
㉖	2"ø SIDEWALK DRAIN PIPE PER CITY OF SANTA MARIA STANDARD DRAWING DR-13	
㉗	CONCRETE PAD-MOUNTED CONTROL AND ELECTRICAL PANEL PER DETAIL	C-102 (2)
㉘	4"ø AIR VENTS PER DETAIL	C-504 (6)
㉙	EXHAUST FAN SYSTEM PER DETAIL	C-504 (5)
㉚	INSULATION FLANGE KIT PER DETAIL	C-502 (5)

0 1/2 1

IF THIS BAR DOES NOT MEASURE 1" THEN DRAWING IS NOT TO FULL SCALE

C-402
SHEET 19 OF 33

CADD STDS.
AECOM/BOYLE

NOSQ PROJECT NO.

AECOM PROJECT NO.
60061296

DATE: JULY 2010
APPROVED:
CHECKED:
DETAILED: JPF
DESIGNED: ES

NIPOMO COMMUNITY SERVICES DISTRICT
WATERLINE INTERTIE PROJECT - BP3

FLOW CONTROL VALVE AND METERING STATION
SECTION VIEWS

AECOM
AECOM USA, Inc.
1194 Pacific Street, Suite 204
San Luis Obispo, California 93401
T 805.542.3940
F 805.542.3990
www.aecom.com

REGISTERED PROFESSIONAL ENGINEER
JOSHUA H. REYNOLDS
No. 65400
Exp. 9/30/11
STATE OF CALIFORNIA

REV	DATE	DESCRIPTION	APPR
PROJECT ENGINEER		REG NUMBER	EXP DATE
JOSHUA H. REYNOLDS		C65400	09/30/2011

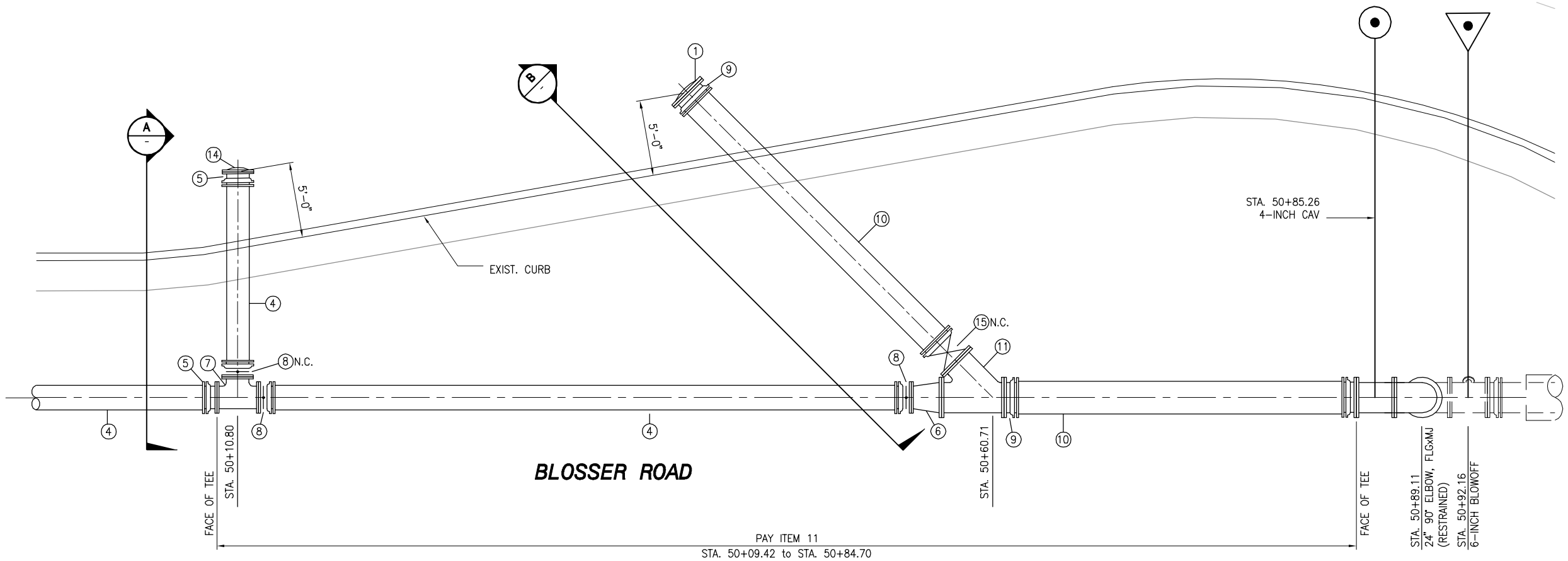

MATERIALS LIST

1. 24" BLIND FLANGE (RESTRAINED)
2. 18"ø D.I.P. SPOOL, FLG'D
3. NOT USED
4. 18"ø D.I. WATER PIPE (RESTRAINED)
5. 18" MJxFLG ADAPTER (RESTRAINED)
6. 18"x24" ECCENTRIC REDUCER, FLG'D
7. 18" TEE, FLG'D
8. 18" BUTTERFLY VALVE, FLGxMJ (RESTRAINED)
9. 24" MJxFLG ADAPTER (RESTRAINED)
10. 24" D.I. WATER PIPE (RESTRAINED)
11. 24" WYE, FLG'D
12. CONCRETE ANCHOR BLOCK PER DETAIL — 3 / C-502
13. VALVE BOX AND CONCRETE RING PER DETAIL — 2 / C-502
14. 18" BLIND FLANGE
15. 24"GATE VALVE, FLGxMJ (RESTRAINED)

NOTES:

1. ALL PIPE TO BE RESTRAINED.
2. VALVE BOXES ARE PLACED OVER BLIND FLANGES TO FACILITATE LOCATING POINTS OF CONNECTION IN FUTURE.

PIG LAUNCHER

SCALE: 1/4" = 1-0"

1 / C-112

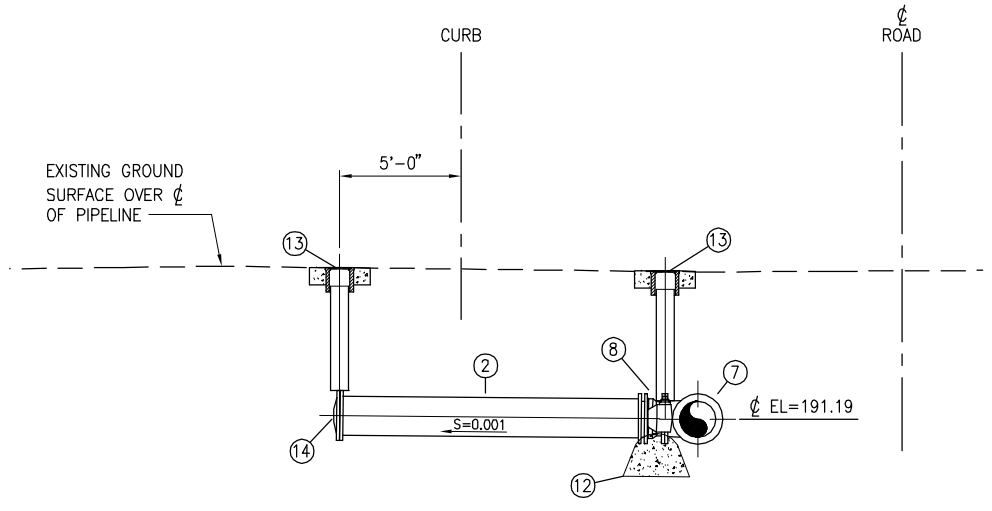

SECTION

SCALE: 1/4" = 1-0"

A / -

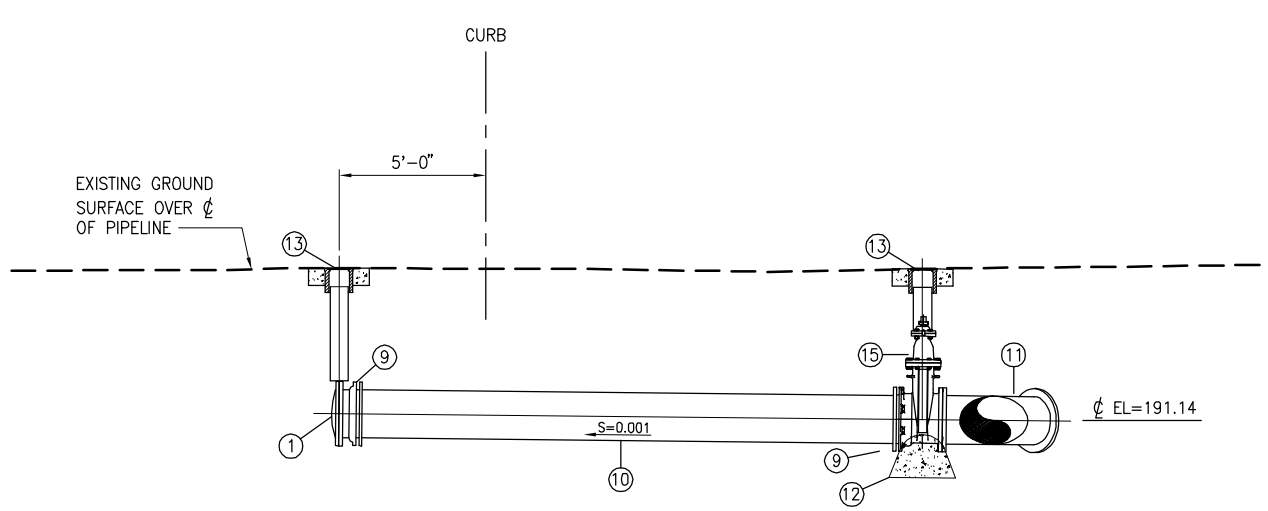

SECTION

SCALE: 1/4" = 1-0"

B / -

0 1/2 1

IF THIS BAR DOES NOT MEASURE 1" THEN DRAWING IS NOT TO FULL SCALE

REV	DESCRIPTION	APPR
PROJECT ENGINEER	DATE	EXP DATE
JOSHUA H. REYNOLDS	REG NUMBER C65400	09/30/2011

PROFESSIONAL ENGINEER * REGISTERED * JOSHUA H. REYNOLDS * No. C 65400 * Exp. 9/30/11 * STATE OF CALIFORNIA

AECOM
AECOM USA, Inc.
1194 Pacific Street, Suite 204
San Luis Obispo, California 93401
T 805.542.9840 F 805.542.9990
www.aecom.com

NIPOMO COMMUNITY SERVICES DISTRICT

NIPOMO COMMUNITY SERVICES DISTRICT
WATERLINE INTERTIE PROJECT - BP3

PIG LAUNCHER
PLAN AND SECTION

DESIGNED:	CR
DETAILED:	JPF
CHECKED:	
APPROVED:	
DATE:	JULY 2010
AECOM PROJECT NO.	60061205
NCSD PROJECT NO.	
CADD STDS.	AECOM/BOYLE

C-403
SHEET 19 OF 33

DWG: W:\Nipomo CSD (19996)\19996.70 Waterline Intertie Project Design\Design Plans\CAD\Plansets\BP-3_BLOSSER ROAD\100% Planset\C-403.dwg Layout Name: C-403 - Plotted by: Froelicher, Jim Date: 7/28/2010 - 5:41 PM
XREFS: NCSD-BD_BP3 - Surface-Section2-ABB - WallaceBase - C-112 - C-113 IMAGES: NCSD_LOGO-transparent_grayscale_small.jpg -

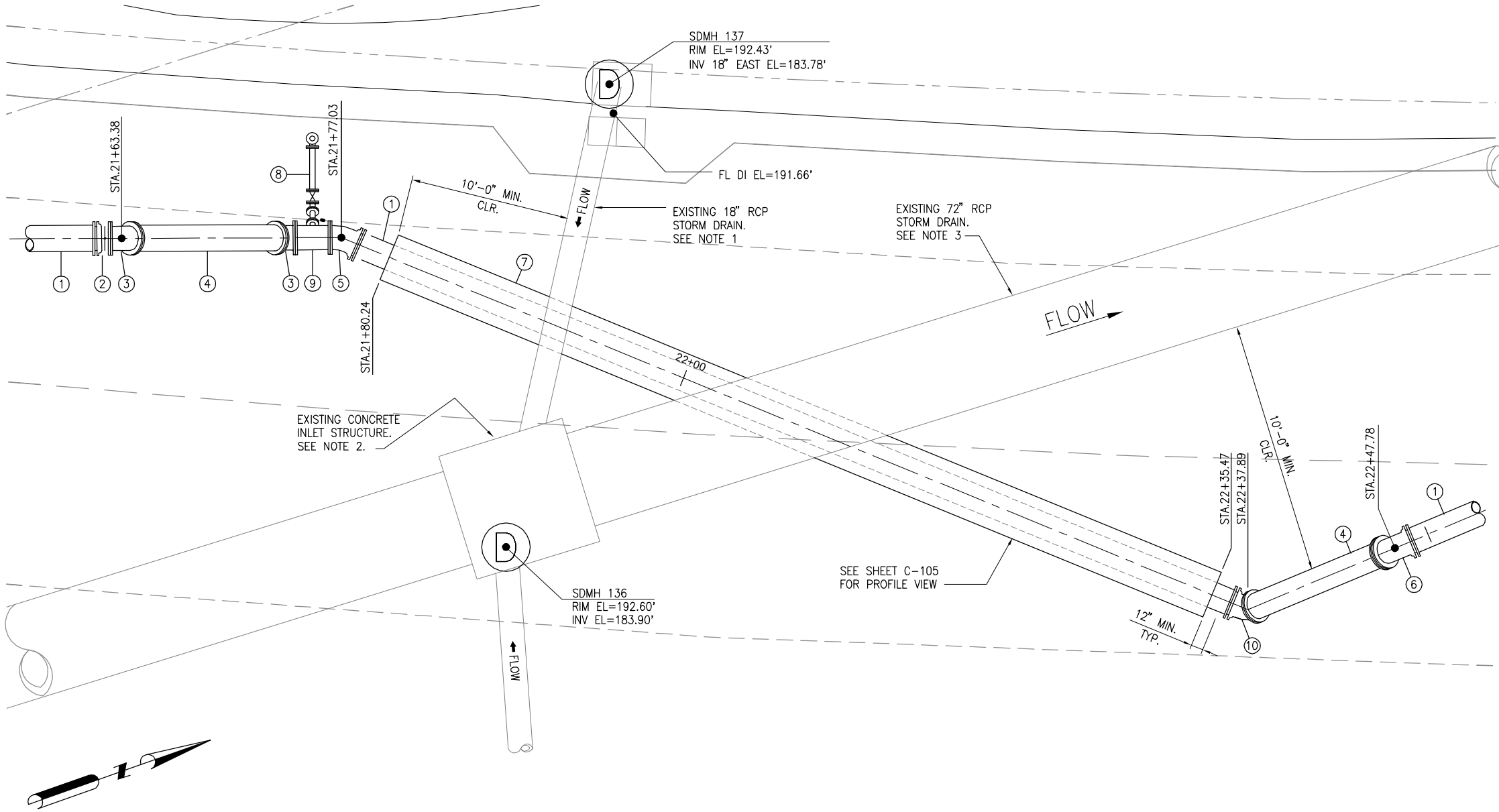

ENLARGED PLAN VIEW 72" STORM DRAIN CROSSING

SCALE: 1/4" = 1'-0"

(1) C-105

CONSTRUCTION NOTES:

1. VIDEO INSPECT THE 18" STORM DRAIN AND 72" STORM DRAIN PRIOR TO CONSTRUCTION AND AGAIN AFTER THE CASING IS INSTALLED. SEE SPECIFICATION SECTION 330131 FOR VIDEO PROCEDURE.
2. PRIOR TO CONSTRUCTION POTHOLE THE EXISTING CONCRETE INLET STRUCTURE TO DETERMINE THE LOCATION OF THE STRUCTURE WALLS AND FOOTING. POTHOLE 18" STORM DRAIN AND 72" STORM DRAIN TO DETERMINE THE HORIZONTAL AND VERTICAL LOCATIONS OF THE PIPES. DELIVER POTHOLE REPORT TO THE OWNER'S REPRESENTATIVE.

MATERIAL LIST:

1. 18"ø PRESSURE CLASS 250 DUCTILE IRON PIPE
2. 18" BUTTERFLY VALVE, FLGxMJ (RESTRAINED) PER DETAIL (1) C-502
3. 18" 45° ELBOW, FLGxMJ (RESTRAINED)
4. 18" D.I.P. SPOOL
5. 18" 22.5° ELBOW, FLGxMJ (RESTRAINED)
6. 18" 45° ELBOW, (RESTRAINED)
7. 36" O.D. STEEL CASING PER DETAIL (1) C-501 MONITOR FOR HEAVING/SETTLING PER SPECIFICATION SECTION 317216
8. BLOWOFF ASSEMBLY PER DETAIL (1) C-503
9. 18"x18"x6" TEE, FLG'D
10. 18" 45° ELBOW, RESTRAINED, 45° VERTICAL ROTATION

REV	DESCRIPTION	APPR	DATE
PROJECT ENGINEER	REG NUMBER	EXP DATE	
JOSHUA H. REYNOLDS	C65400	09/30/2011	

REGISTERED PROFESSIONAL ENGINEER * JOSHUA H. REYNOLDS * No. C 65400 Exp. 9/30/11 * STATE OF CALIFORNIA

AECOM
AECOM USA, Inc.
1194 Pacific Street, Suite 204
San Luis Obispo, California 93401
T 805.542.9840 F 805.542.9990
www.aecom.com

NIPOMO COMMUNITY SERVICES DISTRICT

NIPOMO COMMUNITY SERVICES DISTRICT
WATERLINE INTERTIE PROJECT - BP3

ENLARGED PLANS AND SECTIONS
72" STORM DRAIN CROSSING

DESIGNED:	JHR
DETAILED:	JPF
CHECKED:	
APPROVED:	
DATE:	JULY 2010
AECOM PROJECT NO.	60061295
NCSD PROJECT NO.	
CADD STDS.	AECOM/BOYLE

C-404
SHEET 20 OF 33

0 1/2 1
IF THIS BAR DOES NOT MEASURE 1" THEN DRAWING IS NOT TO FULL SCALE

DWG: W:\Nipomo CSD (19996)\19996.70 Waterline Intertie Project Design\Design Plans\CAD\Planset\BP-3_BLOSSER ROAD\100% Planset\C-404.dwg Layout Name: C-404 -- Plotted by: FroeRichter, Jim Date: 7/28/2010 - 5:45 PM
XREFS: WellpadBase -- Ex-Utilities -- Surface-Section2_v3 -- NCSD-BD_BP3
IMAGES: NCSD LOGO-transparent_grayscale_small.jpg

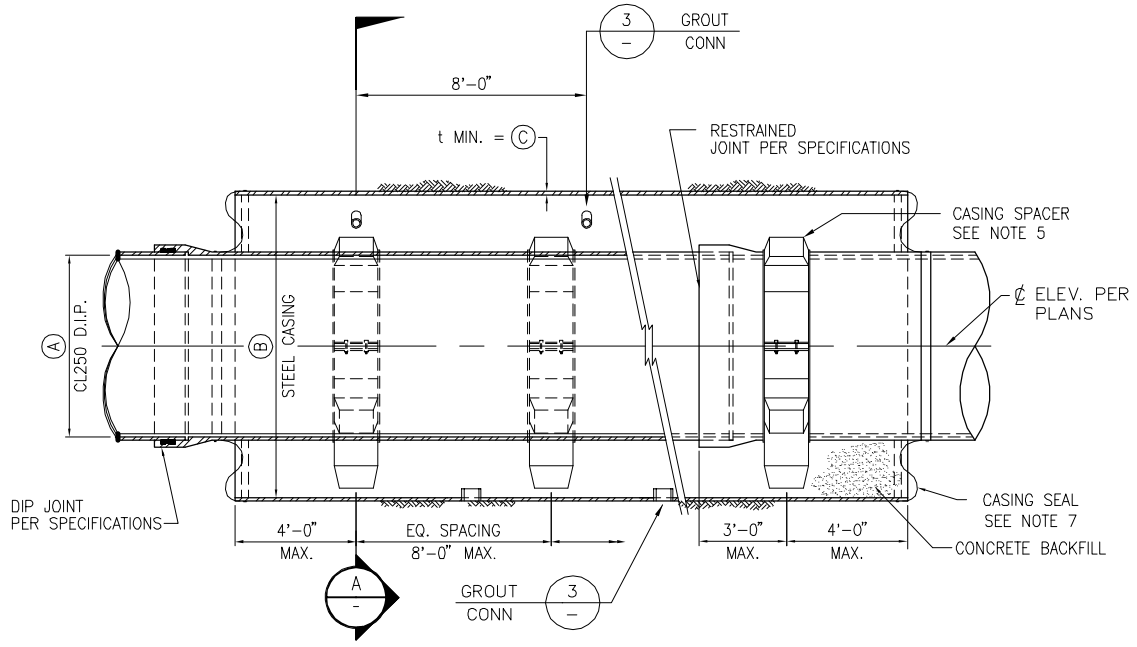

JACKED CASING
NOT TO SCALE

1

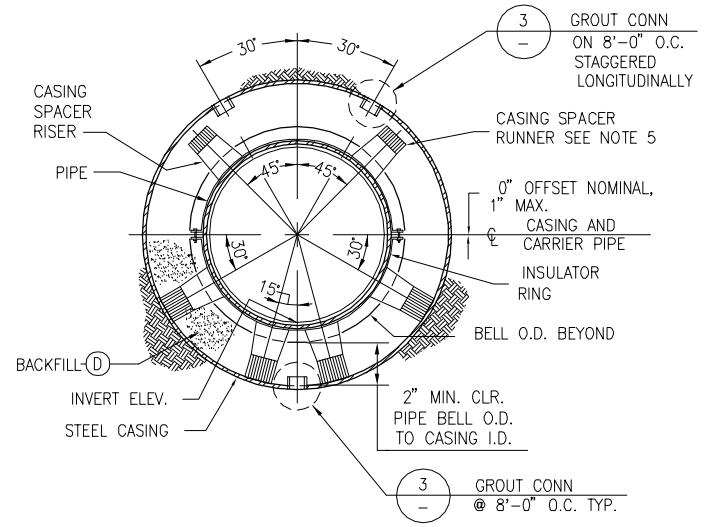

CASING SECTION
NOT TO SCALE

A

NOTES:

1. JACKED STEEL CASINGS SHALL BE IN CONFORMANCE WITH SPECIFICATION SECTION 317216.
2. USE BENTONITE AS REQ'D TO REDUCE JACKING FORCE.
3. ALL STEEL CASING SECTIONS SHALL BE JOINED BY CONTINUOUS WELDING PROCESS.
4. ALL CARRIER PIPE JOINTS WITHIN CASING SHALL BE RESTRAINED PER SPECIFICATION SECTION 402040.
5. CASING SPACER PLACEMENT SHALL BE AS SHOWN ON DETAIL 1 – NUMBER AND SPACING OF RUNNERS/RISERS SHALL BE AS SHOWN ON DETAIL A – SEE SPECIFICATION SECTION 317216.
6. BACKFILL ANNULAR SPACE BETWEEN CASING AND CARRIER PIPE PER SPECIFICATION SECTION 317216 AND TABLE 5
7. EACH END OF A CASING SHALL BE FITTED WITH AN END SEAL, INSTALLED AS SHOWN AND SECURELY FASTENED WITH S.S. CLAMPS. THE END SEAL SHALL BE A MIN. 1/8" THICK NEOPRENE.

JACKED CASING TABLE					
JACK SLEEVE LOCATION	SHEET	Ⓐ CARRIER PIPE NOM. DIA.	Ⓑ STEEL CASING O.D.	Ⓒ MINIMUM CASING THICKNESS	Ⓓ ANNULAR BACKFILL MATERIAL
72" STORM DRAIN	C–105	18"	36"	¾"	SAND
LEVEE	C–112	24"	36"	¾"	CONCRETE

JACK CASING TABLE

5

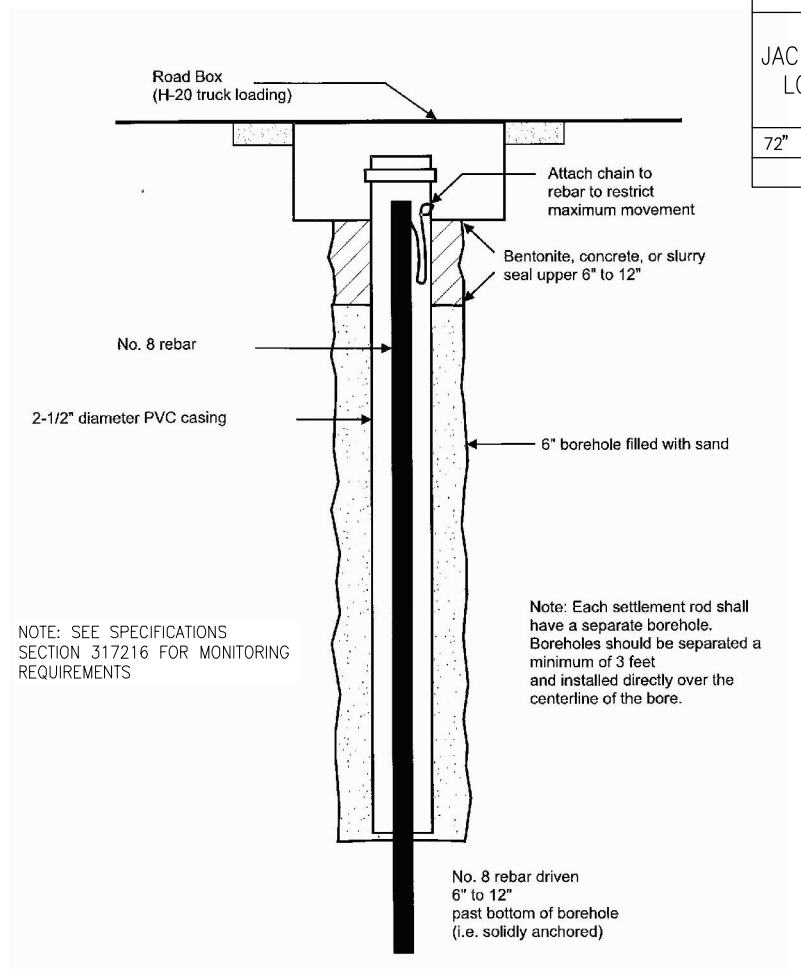

SETTLEMENT ROD
NOT TO SCALE

2

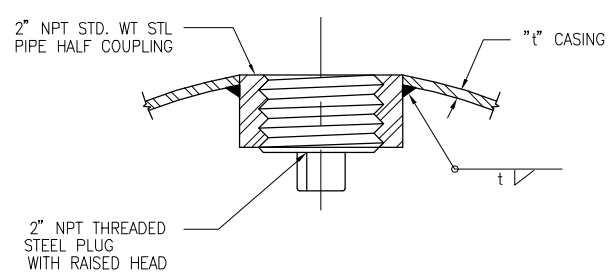

GROUT CONNECTION
NOT TO SCALE

3

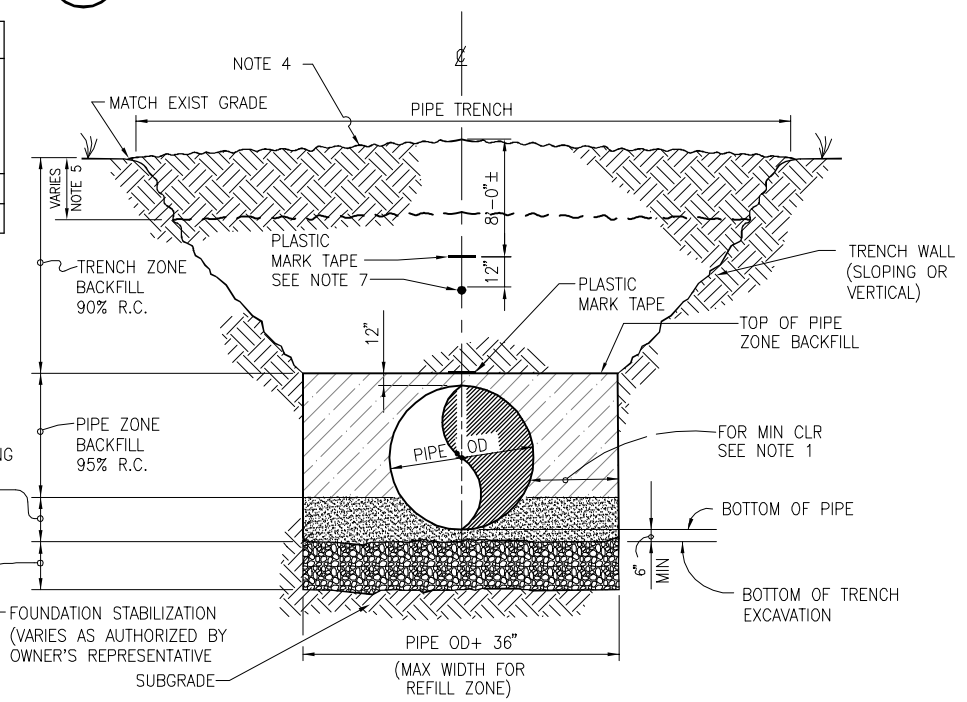

NOTES:

1. MINIMUM CLEARANCE BETWEEN PIPE OD AND TRENCH WALL SHALL BE 18 INCHES FOR COMPACTED PIPE ZONE MATERIAL, AND 12 INCHES FOR SOIL–CEMENT SLURRY.
2. FOR BACKFILL MATERIAL, COMPACTION REQUIREMENTS, AND PIPE MARKERS SEE SPECIFICATION SECTION 312316.
3. MATERIAL FOR SOIL PADS SHALL BE IMPORTED SAND PER SPECIFICATION SECTION 312316.
4. MOUND BACKFILL ABOVE PIPE, SLOPE TO DRAIN AWAY. RESTORE TOPSOIL LAND PER SPECIFICATION SECTION 011160.
5. REMOVE, STORE SEPARATELY AND RESTORE BIOLOGICALLY ACTIVE TOPSOIL (A HORIZON) FOR CONSTRUCTION ACTIVITIES ON PRIME FARMLAND. SEE SPECIFICATION SECTION 011160.
6. PROVIDE ROCK REFILL ENCASED IN FILTER FABRIC FOR OVER EXCAVATION IN SOFT, WET OR YIELDING SOILS AND/OR FOUNDATION STABILIZATION (WHEN AUTHORIZED OR REQUIRED BY ENGINEER) PER SPECIFICATION SECTION 312316.
7. #10 AWG SOLID HIGH STRENGTH, STEEL CORE COPPER CLAD, TRACER WIRE WITH 30mil HDPE JACKET, COPPERHEAD OR APPROVED EQUAL.

24" PIPE DEEP TRENCH SECTION
NOT TO SCALE

4

IF THIS BAR DOES NOT MEASURE 1" THEN DRAWING IS NOT TO FULL SCALE

REV	DESCRIPTION	APPR
DATE	REQ NUMBER	EXP DATE
PROJECT ENGINEER	C65400	09/30/2011
JOSHUA H. REYNOLDS		

PROFESSIONAL ENGINEER * JOSHUA H. REYNOLDS * No. 65400 * Exp. 9/30/11 * STATE OF CALIFORNIA

AECOM
AECOM USA, Inc.
1194 Pacific Street, Suite 204
San Luis Obispo, California 93401
T 805.542.9840 F 805.542.9990
www.aecom.com

NIPOMO COMMUNITY SERVICES DISTRICT
WATERLINE INTERTIE PROJECT - BP3

BLOSSER ROAD PIPELINE DETAILS - 1

DESIGNED:	CR
DETAILED:	JPF
CHECKED:	
APPROVED:	
DATE:	JULY 2010
AECOM PROJECT NO.	60061295
NCSD PROJECT NO.	
CADD STDS.	AECOM/BOYLE

C-501
SHEET
22 OF 33

DWG: W:\Nipomo CSD (19996)\19996.70 Waterline Intertie Project Design\Design Plans\CAD\Plansets\BP-3_BLOSSER ROAD\100% Planset\C-501.dwg Layout Name: C-501 – Plotted by: Freelcher, Jim Date: 7/28/2010 – 4:16 PM
XREFS: NCSD-BD_BP3 IMAGES: Settlement Rod.jpg – NCSD LOGO–transparent_grayscale_small.jpg

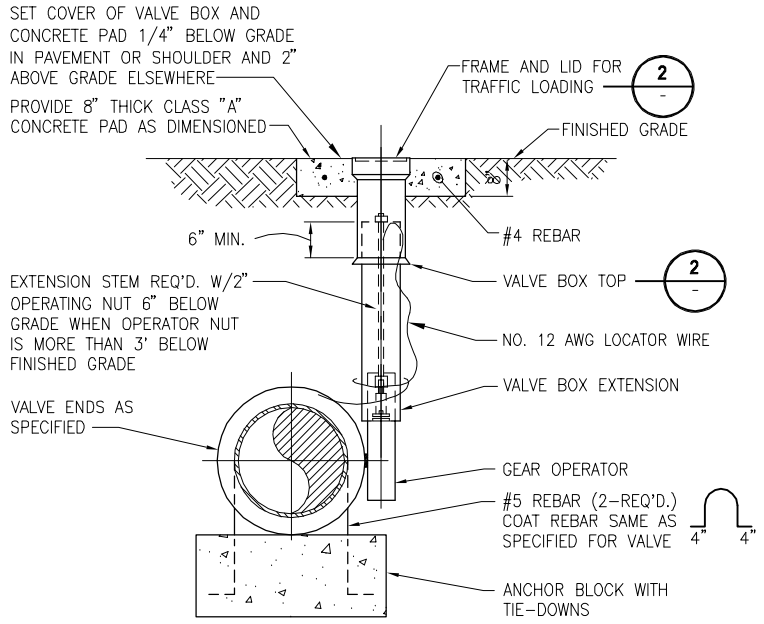

NOTES:
1. VALVE BOX REQUIRED AT ALL BURIED VALVES.
2. ANCHOR BLOCK IS REQUIRED AT ALL INLINE VALVES.
3. WHEN LOOKING UPSTATION VALVE OPERATOR SHALL BE ON THE RIGHT SIDE OF PIPE.

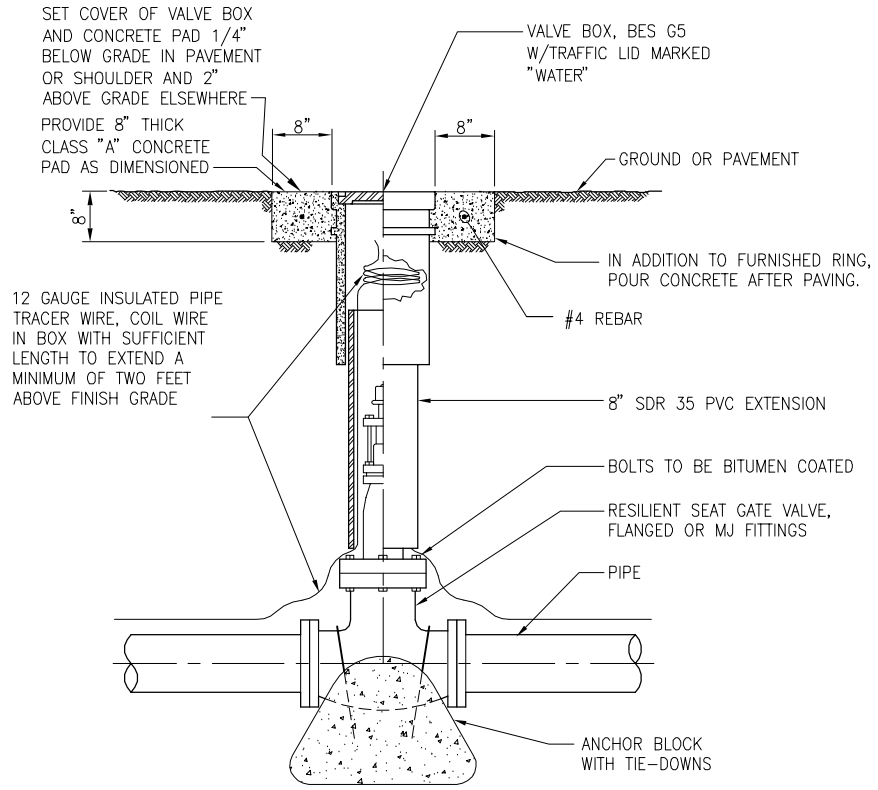

SECTION – ELEVATION

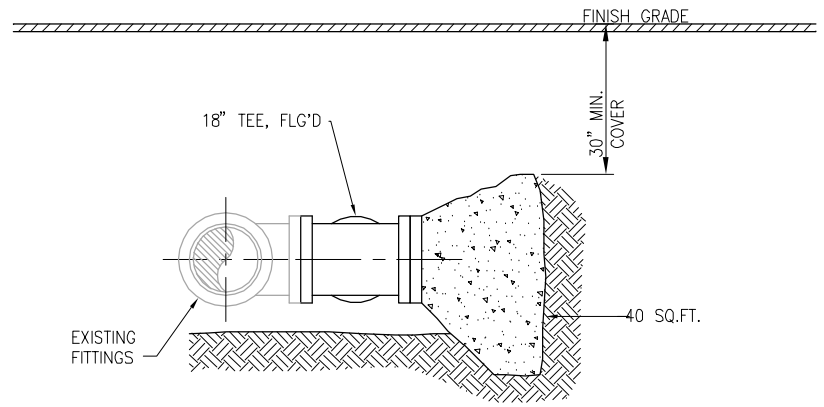

NOTES:
1. ALL THRUST BLOCK BEARING FACES SHALL BE POURED AGAINST UNDISTURBED SOIL OR APPROVED COMPACTED MATERIAL.
2. SEE SPECIFICATIONS FOR CONCRETE REQUIREMENTS.
3. MAINTAIN MINIMUM OF 30" COVER OVER TOP OF THRUST BLOCK

BURIED BUTTERFLY VALVE BOX SETTING

1 / –

NOT TO SCALE

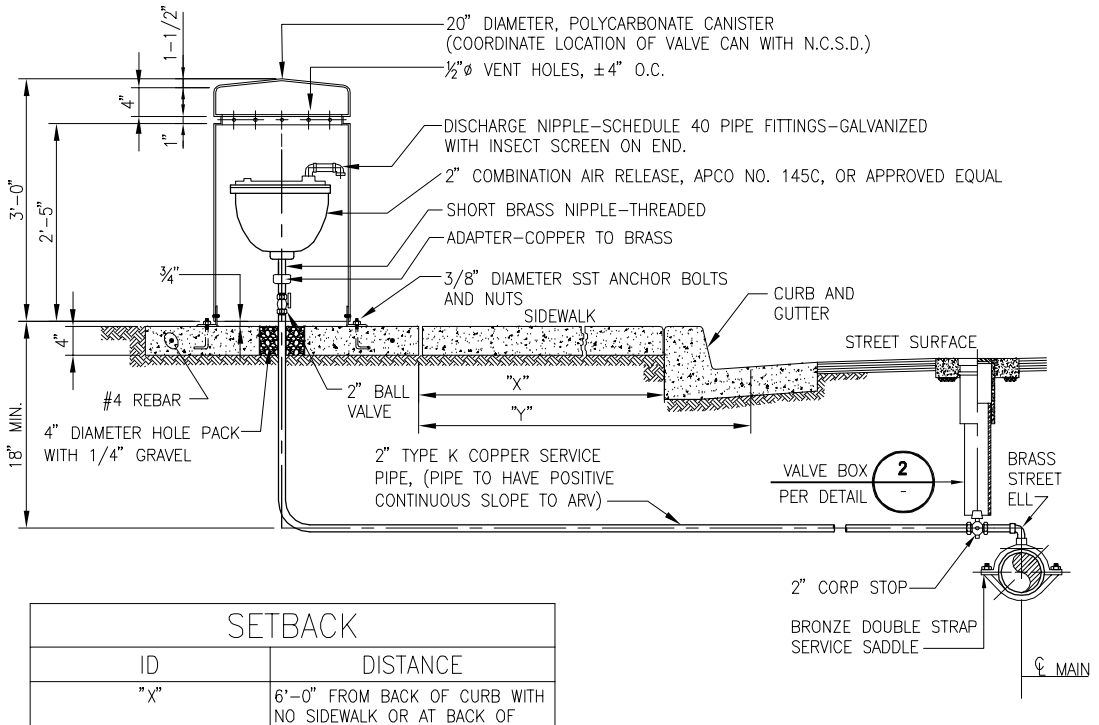

SETBACK	
ID	DISTANCE
"X"	6'–0" FROM BACK OF CURB WITH NO SIDEWALK OR AT BACK OF SIDEWALK WHEN PRESENT
"Y"	8'–0" FROM EDGE OF PAVEMENT WITH OUT CURB

NOTE:
1. COMBINATION AIR RELEASE VALVES TO BE LOCATED AT PIPELINE HIGH POINTS.

N.C.S.D. VALVE BOX ASSEMBLY

2 / –

NOT TO SCALE

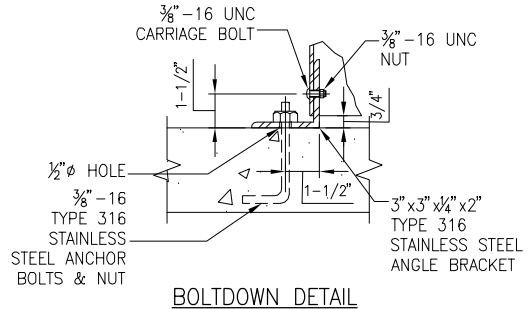

BOLTDOWN DETAIL

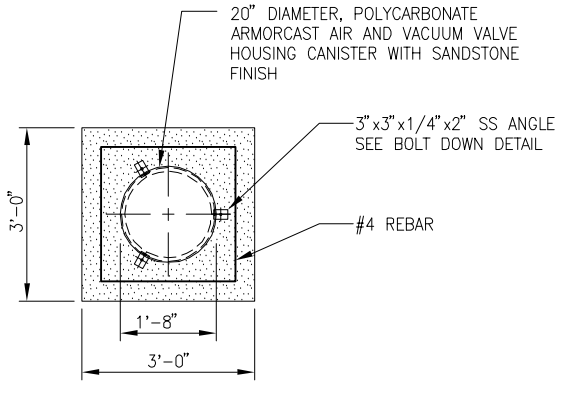

CANISTER PLAN VIEW

THRUST BLOCK DETAIL

3 / –

NOT TO SCALE

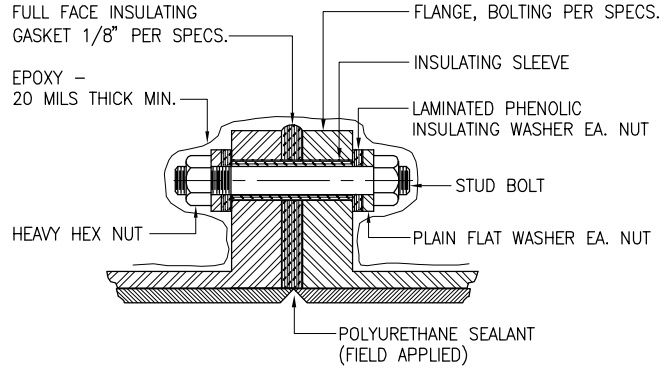

N.C.S.D. 2" COMBINATION AIR RELEASE VALVE ASSEMBLY

4 / –

NOT TO SCALE

INSULATION FLANGE

5 / –

NOT TO SCALE

0 1/2 1

IF THIS BAR DOES NOT MEASURE 1" THEN DRAWING IS NOT TO FULL SCALE

REV	DATE	DESCRIPTION	APPR
PROJECT ENGINEER		REG NUMBER	EXP DATE
JOSHUA H. REYNOLDS		C65400	09/30/2011

PROFESSIONAL ENGINEER * REGISTERED * No. C 65400 * Exp. 9/30/11 * STATE OF CALIFORNIA

AECOM
AECOM USA, Inc.
1194 Pacific Street, Suite 204
San Luis Obispo, California 93401
T 805.542.9840 F 805.542.9990
www.aecom.com

NIPOMO COMMUNITY SERVICES DISTRICT
WATERLINE INTERTIE PROJECT - BP3

BLOSSER ROAD PIPELINE DETAILS - 2

DESIGNED:	JR
DETAILED:	JPF
CHECKED:	
APPROVED:	
DATE:	JULY 2010
AECOM PROJECT NO.	60061295
NCSD PROJECT NO.	
CADD STDS.	AECOM/BOYLE

C-502
SHEET 23 OF 33

DWG: W:\Nipomo CSD (1996\5\1996.70 Waterline Intertie Project Design\Design Plans\CAD\Planset\BP-3_BLOSSER ROAD\100% Planset\C-502.dwg Layout Name: C-502 - Plotted by: Froelicher, Jim Date: 7/28/2010 - 5:48 PM
XREFS: NCSD-BD_BP3 IMAGES: NCSD LOGO-transparent_greyscale_small.jpg

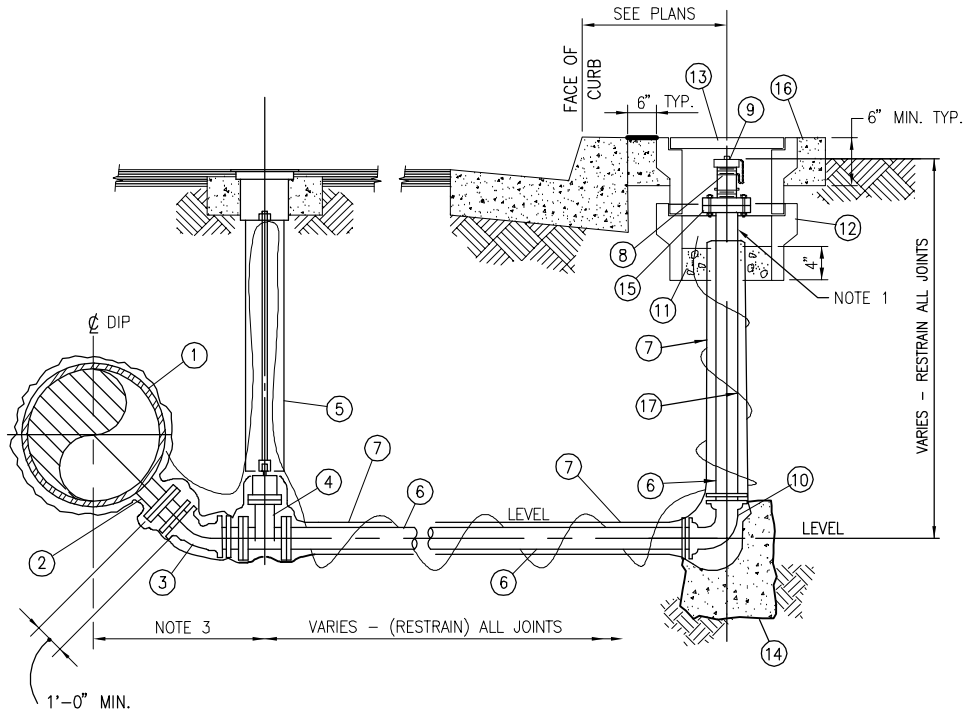

ITEM	DESCRIPTION
1	WATERMAIN
2	FLANGED OUTLET
3	DIP MJ 45° ELBOW WITH RESTRAINED JOINTS
4	GATE VALVE, RESILIENT WEDGE
5	VALVE BOX INSTALLATION FOR BURIED VALVES PER W–3
6	6" CLASS 350 DIP
7	POLYETHYLENE ENCASING
8	4" BRONZE NIPPLE, REGULAR WALL, IPT x FIRE HOSE THREAD.
9	PVC PIPE CAP
10	DIP MJ 90° ELBOW WITH RESTRAINED JOINTS
11	3/4" GRAVEL
12	H–20 TRAFFIC RATED PRECAST VALVE BOX, CHRISTY G12 OR APPROVED EQUAL.
13	HS–20 TRAFFIC RATED, BOLTED, GALVANIZED STEEL HATCH
14	CONCRETE ANCHOR BLOCK, 6 SQ.FT. MIN.
15	6" CLASS 150 FLANGES, TAPPED COMPANION FLANGE TO MATCH ITEM 8.
16	6" SQ. CONCRETE COLLAR
17	LOCATOR WIRE, 12 AWG INSULATED

NOTES:
1. WATERMAINS WITH A DIAMETER GREATER THAN 12" SHALL USE A 6" OUTLET FROM THE MAIN WITH A 6" LATERAL AND VALVE AND A 4" BRONZE NIPPLE.
2. MINIMIZE DISTANCE BETWEEN OUTLET AND VALVE TO CLEAR PIPE BY 6".
3. COORDINATE LOCATION OF BLOWOFF WITH PLANS AND OWNER'S REPRESENTATIVE.

N.C.S.D. BLOWOFF ASSEMBLY
1 –
NOT TO SCALE

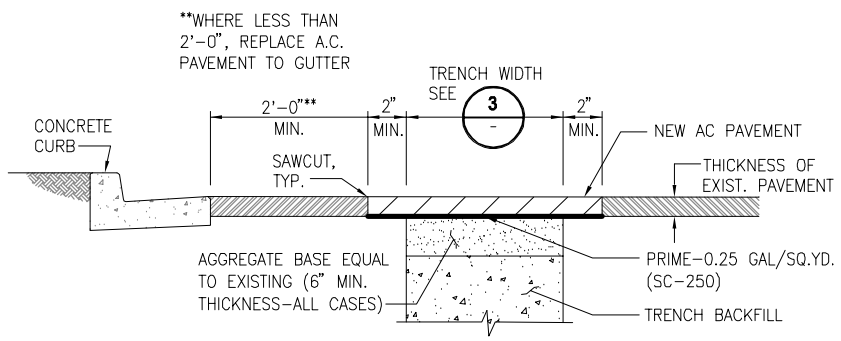

NOTE:
1. ALL MATERIALS PER SPECIFCATION SECTIONS 312316 AND 321216.

CITY OF SANTA MARIA SURFACE RESTORATION A.C. PAVED AREAS (NOT TO SCALE)
4 –

ITEM	DESCRIPTION
1	4" FLG. OUTLET
2	VALVE BOX INSTALLATION FOR BURIED VALVE, SEE DETAIL 2 / C–502 (OMIT ANCHOR BLOCK)
3	POLYETHYLENE ENCASEMENT PER SECTION 099754.
4	4" GATE VALVE
5	4" 90° FLG'D ELBOW
6	LOCATOR WIRE, 12 AWG INSULATED
7	4" CL 350 DIP WITH RESTRAINED JOINTS
8	30" O.D. POLYCARBONATE ENCLOSURE, SEE DETAIL 5 / –
9	36" x 39" x 6" THICK CONCRETE PAD, CLASS "A"
10	COMBINATION AIR RELEASE AND VACUUM VALVE, AFCO NO. 149C, OR APPROVED EQUAL
11	MALLEABLE IRON 90° STREET ELBOWS, HOT DIPPED GALVANIZED
12	1/2" CL 125 CAST BRONZE 90° STREET ELL AND CLOSE BRASS NIPPLE
13	1/2" BRONZE ANGLE VALVE 0–300 PSI
14	3/4" MALE NATIONAL HOSE THREAD x 1/2" MALE IPT BRASS HOSE NIPPLE
15	TAPE COATED 6" STD. WT. STL. PIPE. GROUT RISER PIPE WITHIN.
16	CONCRETE ANCHOR BLOCK, 18" SQ.
17	4" BALL VALVE, FLG'D

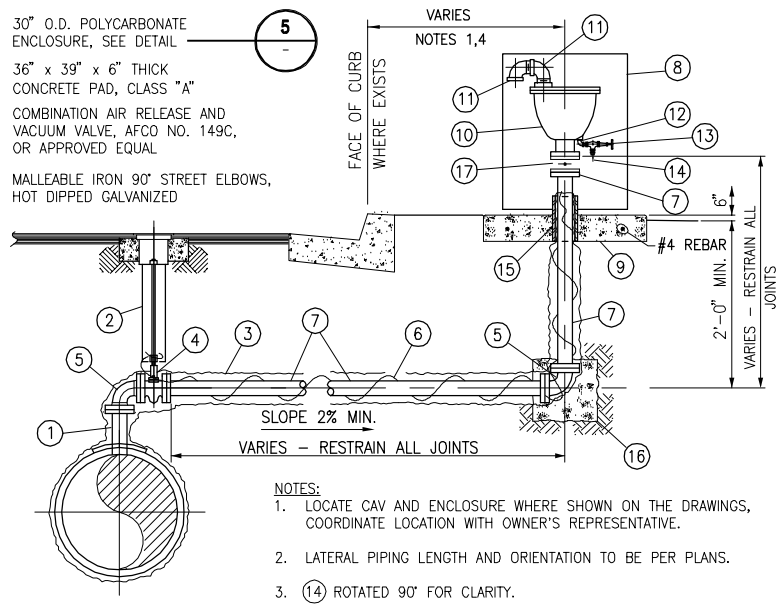

NOTES:
1. LOCATE CAV AND ENCLOSURE WHERE SHOWN ON THE DRAWINGS, COORDINATE LOCATION WITH OWNER'S REPRESENTATIVE.
2. LATERAL PIPING LENGTH AND ORIENTATION TO BE PER PLANS.
3. (14) ROTATED 90° FOR CLARITY.
4. WHEN SIDEWALK ADJACENT TO CURB EXCEEDS 5' IN WIDTH, LOCATE PIPE RISER AND VALVE ASS'Y 2' FROM FACE OF CURB OR AS DIRECTED BY THE OWNER'S REPRESENTATIVE.

4" COMBINATION AIR VALVE (CAV) ASSEMBLY
2 –
NOT TO SCALE

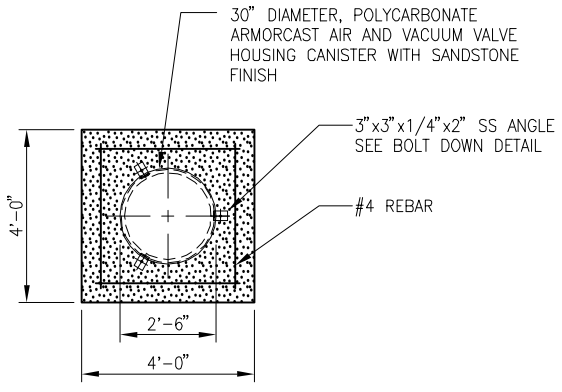

CANISTER PLAN VIEW

30"Ø POLYCARBONATE CANISTER
5 –
NOT TO SCALE

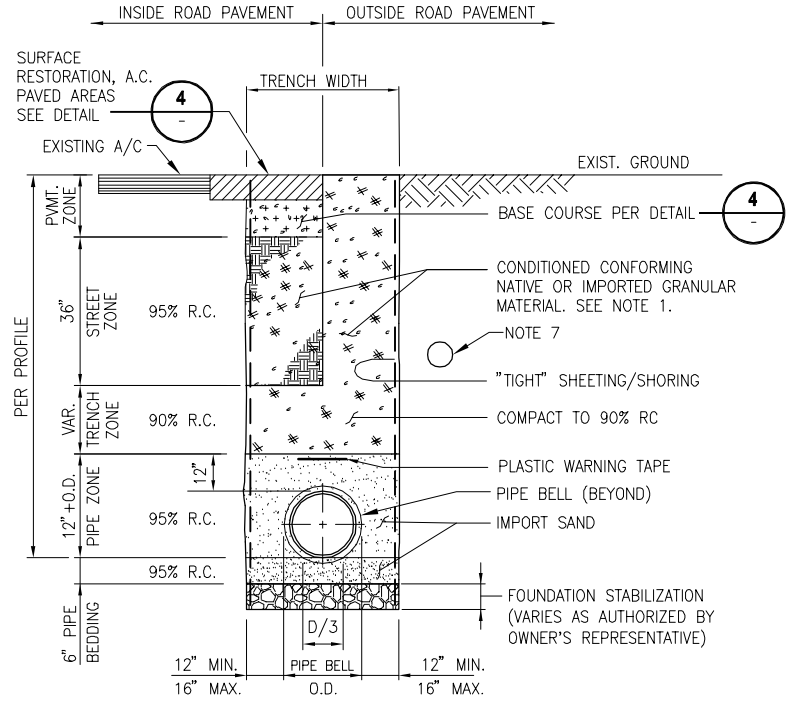

NOTES:
1. BACKFILL MATERIALS SHALL BE PER SPECIFICATION SECTION 312316.
2. SEE SPECIFICATION SECTION 312316 IF TRENCH WIDTH EXCEEDS THE MAXIMUM SHOWN ON THE DRAWINGS.
3. MINIMUM COVER ALL DISTRIBUTION MAINS TO BE 3'–0" AS MEASURED FROM THE BOTTOM OF PAVEMENT.
4. COMPACTION OF PAVEMENT ZONE SHALL BE APPROVED BY THE CITY OF SANTA MARIA DEPARTMENT OF PUBLIC WORKS (OR GOVERNING JURISDICTION) PRIOR TO THE PLACING OF THE PERMANENT PAVEMENT.
5. PROVIDE ROCK REFILL ENCASED IN FILTER FABRIC FOR OVER EXCAVATION IN SOFT, WET, OR YIELDING SOILS AND/OR FOUNDATION STABILIZATION (WHEN AUTHORIZED OR REQUIRED BY ENGINEER) PER SPEC. SECTION 312316.
6. WHERE THE TRENCH FOLLOWS THE EDGE OF PAVEMENT OR IS PLACED IN AN EXISTING SHOULDER, THE TOP SIX INCHES (6") OF THE BACKFILL SHALL CONSIST OF CLASS II AGGREGATE BASE COMPACTED TO 95%. SHOULDERS HAVING A GREATER DEPTH OF BASE MATERIAL THAN SIX INCHES (6") SHALL BE REPLACED WITH A THICKNESS AT LEAST EQUAL TO THAT REMOVED AND THE APPROVAL OF THE ENGINEER AS TO THE EXACT TYPE OF REPLACEMENT IN–SUCH CASES IS REQUIRED. THE FINISHED REPLACEMENT SHALL BE ROLLED WITH STEEL DRUM (OR EQUAL) AND FINISHED TO MAKE THE BEST POSSIBLE CONNECTION TO THE EXISTING PAVEMENT.
7. PROTECT EXISTING UTILITIES IN PLACE, PER SPECIFICATION SECTION 020120

WATER PIPE BEDDING & BACKFILL
3 –
NOT TO SCALE

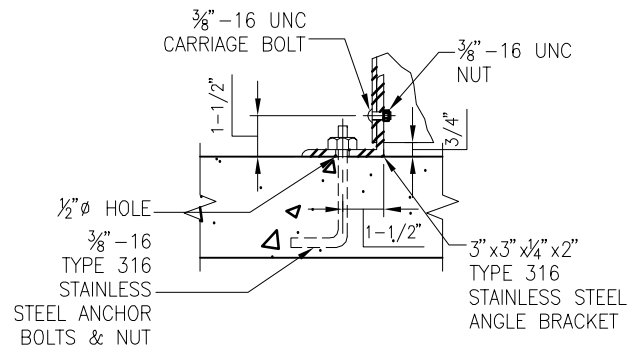

BOLTDOWN DETAIL

0 1/2 1
IF THIS BAR DOES NOT MEASURE 1" THEN DRAWING IS NOT TO FULL SCALE

REV	DATE	DESCRIPTION	APPR
PROJECT ENGINEER		REF NUMBER	EXP DATE
JOSHUA H. REYNOLDS		C65-400	09/30/2011

REGISTERED PROFESSIONAL ENGINEER JOSHUA H. REYNOLDS No. 65400 Exp. 9/30/11 STATE OF CALIFORNIA

AECOM
AECOM USA, Inc.
1194 Pacific Street, Suite 204
San Luis Obispo, California 93401
T 805.542.9840 F 805.542.9990
www.aecom.com

SERVICES DISTRICT COMMUNITY NIPOMO

NIPOMO COMMUNITY SERVICES DISTRICT
WATERLINE INTERTIE PROJECT - BP3

BLOSSER ROAD PIPELINE DETAILS - 3

DESIGNED:	JR
DETAILED:	JPF
CHECKED:	
APPROVED:	
DATE:	JULY 2010
AECOM PROJECT NO.	60061295
NCSD PROJECT NO.	
CADD STDS.	AECOM/BOYLE

C-503
SHEET 24 OF 33

DWG: W:\Nipomo CSD (19996)\19996.70 Waterline Intertie Project Design\Design Plans\CAD\Planset\BP–3_BLOSSER ROAD\100% Planset\C–503.dwg Layout Name: C–503 – Plotted by: Froelicher, Jim Date: 7/28/2010 – 1:25 PM
XREFS: NCSD–BD_BP3 IMAGES: NCSD LOGO–transparent_greyscale_small.jpg

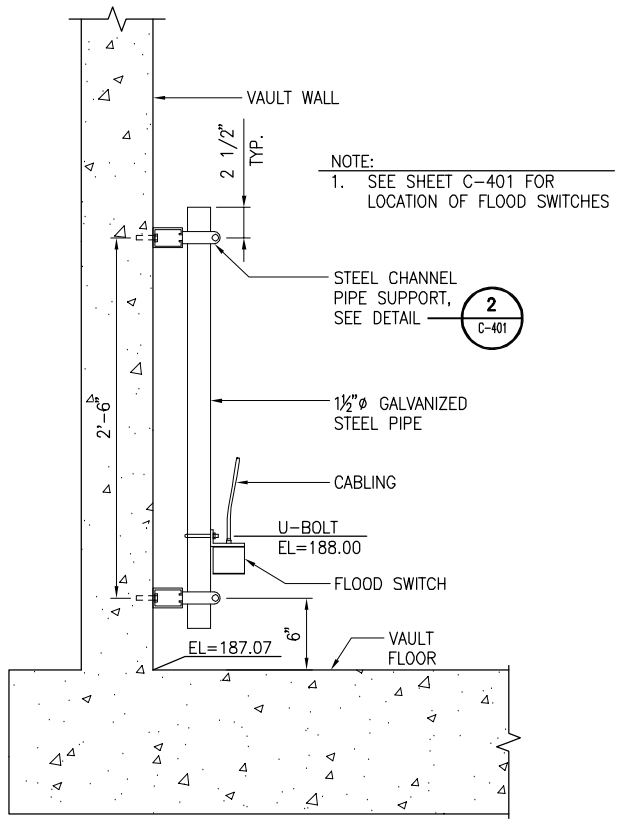

FLOOD SWITCH 1

NOT TO SCALE

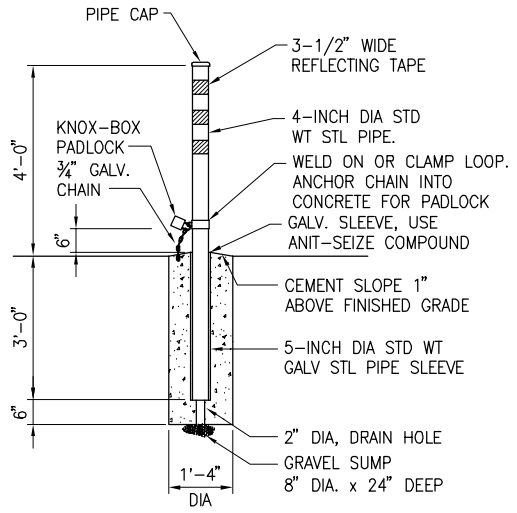

NOTES:

1. EXACT LOCATION OF BOLLARDS MAY BE CHANGED BY THE OWNER'S REPRESENTATIVE IN THE FIELD.
2. DO NOT FILL WITH CONCRETE.
3. PROVIDE KNOX-BOX PADLOCKS PER CITY OF SANTA MARIA FIRE DEPARTMENT.
4. PROVIDE 48" CLEAR SPACING BETWEEN BOLLARDS.
5. THE EXTERIOR OF THE ABOVE GROUND PORTION OF THE BOLLARD SHALL BE PAINTED WITH TWO COATS OF DEVOE BAR-RUST 233H EPOXY COATING AND TWO COATS OF DEVOE NO. 379 DEVTHANE (MEDIUM YELLOW).
6. FOR SAFETY, BOLLARDS SHALL NOT BE INSTALLED INSIDE THE CLEAR ZONE OF A ROADWAY AS DEFINED BY CALTRANS.

REMOVABLE BOLLARD 2

NOT TO SCALE

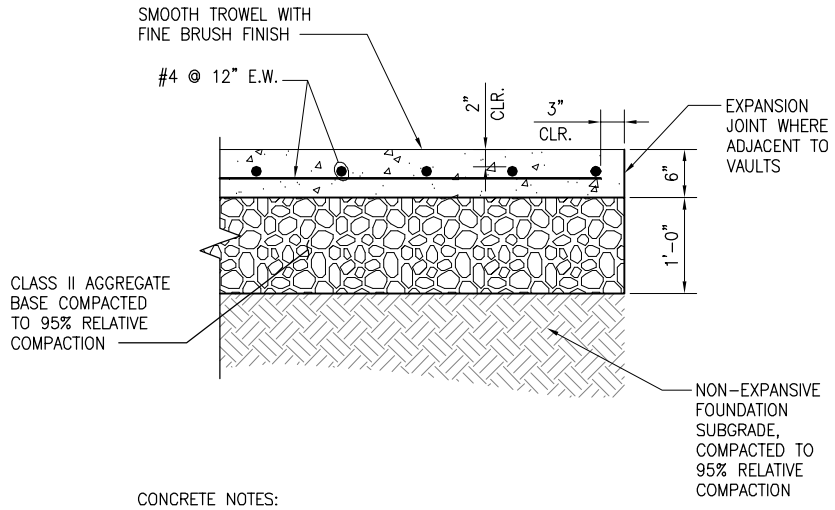

CONCRETE NOTES:

1. WORKMANSHIP AND MATERIALS SHALL COMPLY WITH CITY OF SANTA MARIA SPECIFICATIONS FOR CONCRETE CURB AND GUTTER AND SIDEWALK.
2. CONCRETE SHALL HAVE A MINIMUM COMPRESSIVE STRENGTH F'_c=4000psi FOR ALL STRUCTURES.
3. USE ASTM C150 TYPE II CEMENT.
4. CURING-USE APPROVED CURING COMPOUND.
5. REINFORCING STEEL SHALL CONFORM TO ASTM A615, GRADE 60.
6. EXPANSION JOINTS-3/8" FULL DEPTH REMOLDED ASPHALT IMPREGNATED, EVENLY SPACED, NOT OVER 30' APART AT ALL CURB RETURNS, DRIVEWAY APRONS AND EXISTING WORK.
7. NO PIPES OR DUCTS SHALL BE PLACED IN CONCRETE STRUCTURES UNLESS SPECIFICALLY DETAILED.
8. POUR SLABS IN A SINGLE MONOLITHIC POUR.
9. PROVIDE CONCRETE SPACER BLOCKS @ 48" O.C. TO MAINTAIN REINFORCING IN PLACE.
10. FINISH-ALL EDGES, CORNERS, AND ENDS SHALL HAVE ½" RADIUS.
11. STRUCTURAL STEEL SHAPES SHALL COMFORM TO ATSM A36/A992.

CONCRETE SLAB AT VAULTS 3

NOT TO SCALE

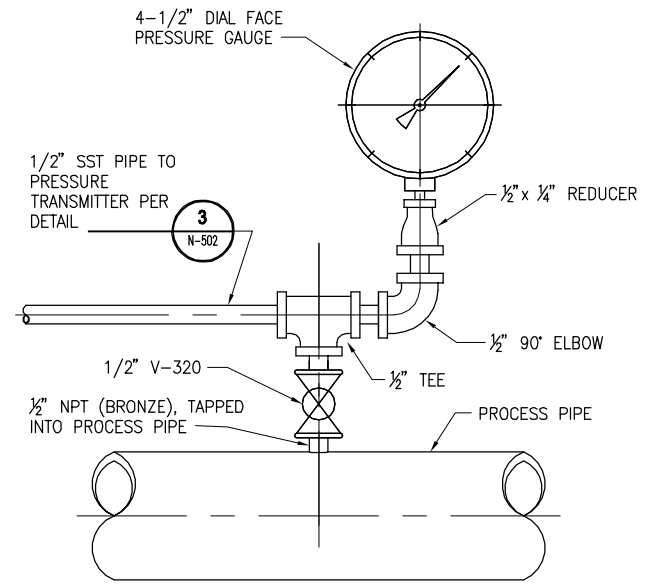

NOTES:
1. SST = TYPE 316 SST

PRESSURE GAUGE AND PRESSURE TRANSMITTER MOUNTING (PIPE) 4

NOT TO SCALE

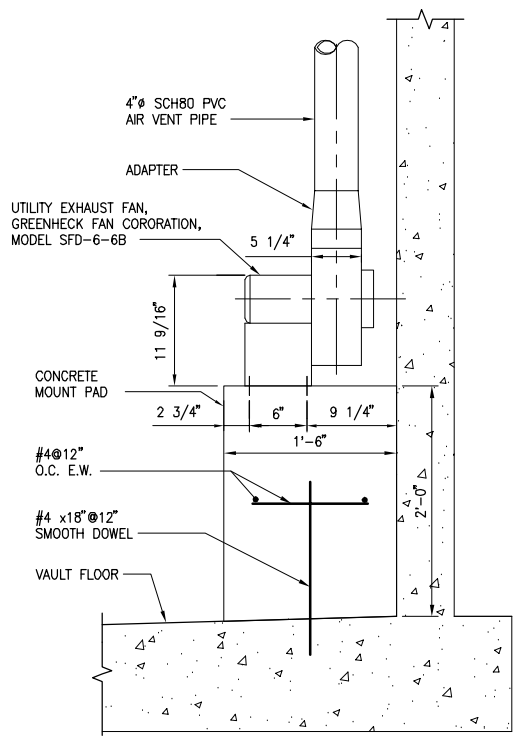

SIDE VIEW

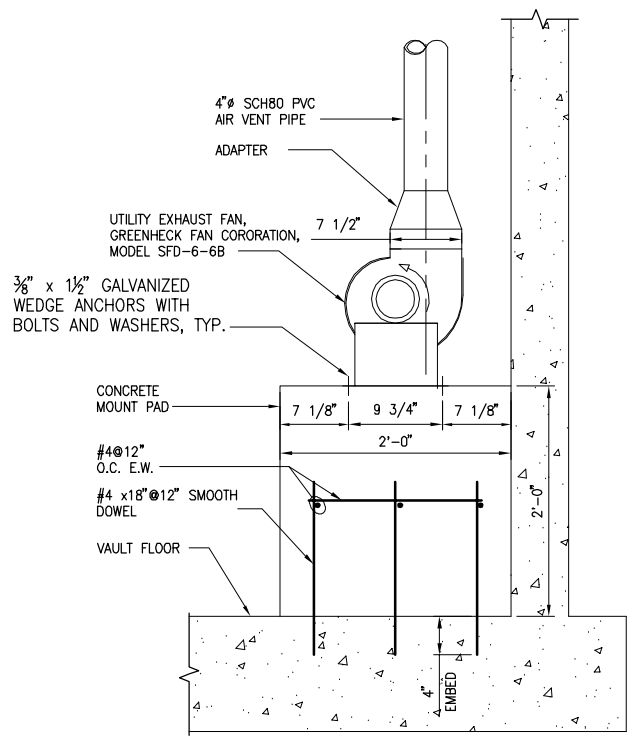

FRONT VIEW

EXHAUST FAN DETAIL 5

NOT TO SCALE

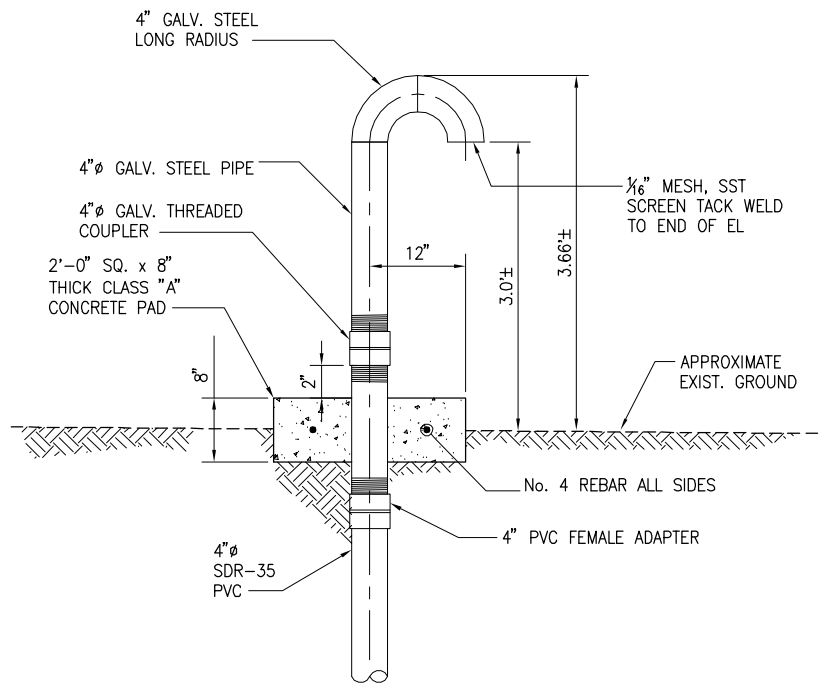

4"Ø AIR VENT 6

NOT TO SCALE

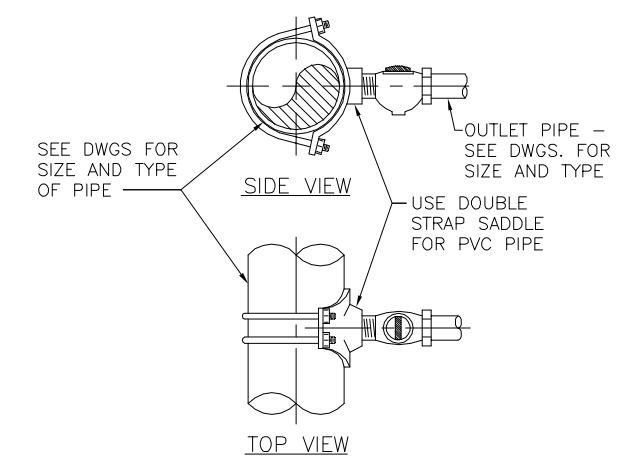

DOUBLE STRAP SERVICE SADDLE 7

NOT TO SCALE

0 1/2 1

IF THIS BAR DOES NOT MEASURE 1" THEN DRAWING IS NOT TO FULL SCALE

REV	DATE	DESCRIPTION	APPR
PROJECT ENGINEER		REG NUMBER	EXP DATE
JOSHUA H. REYNOLDS		C65400	09/30/2011

REGISTERED PROFESSIONAL ENGINEER JOSHUA H. REYNOLDS No. C 65400 Exp. 9/30/11 STATE OF CALIFORNIA

AECOM
AECOM USA, Inc.
1194 Pacific Street, Suite 204
San Luis Obispo, California 93401
T 805.542.9840 F 805.542.9990
www.aecom.com

NIPOMO COMMUNITY SERVICES DISTRICT

NIPOMO COMMUNITY SERVICES DISTRICT
WATERLINE INTERTIE PROJECT - BP3

BLOSSER ROAD PIPELINE DETAILS - 4

DESIGNED:	JR
DETAILED:	JPF
CHECKED:	
APPROVED:	
DATE:	JULY 2010
AECOM PROJECT NO.	60061295
NCSD PROJECT NO.	
CADD STDS.	AECOM/BOYLE

C-504
SHEET 25 OF 33

DWG: W:\Nipomo CSD (19996)\19996.70 Waterline Intertie Project Design\Design Plans\CAD\Planset\BP-3_BLOSSER ROAD\100% Planset\C-504.dwg Layout Name: C-504 - Plotted by: Froelicher, Jim Date: 7/28/2010 - 5:50 PM
XREFS: NCSD-BD_BP3 IMAGES: NCSD LOGO-transparent_grayscale_small.jpg

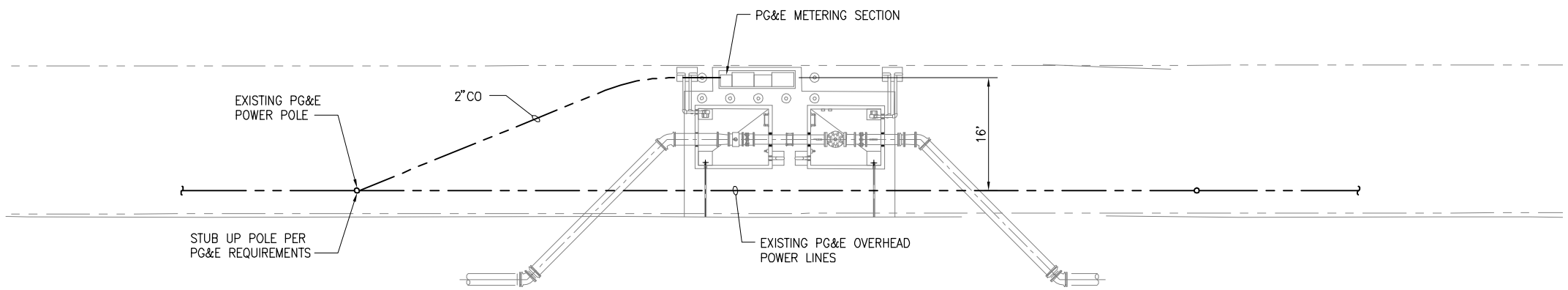

FLOW METER VAULT ELECTRICAL SITE PLAN

1 / –

SCALE: 1" = 10"

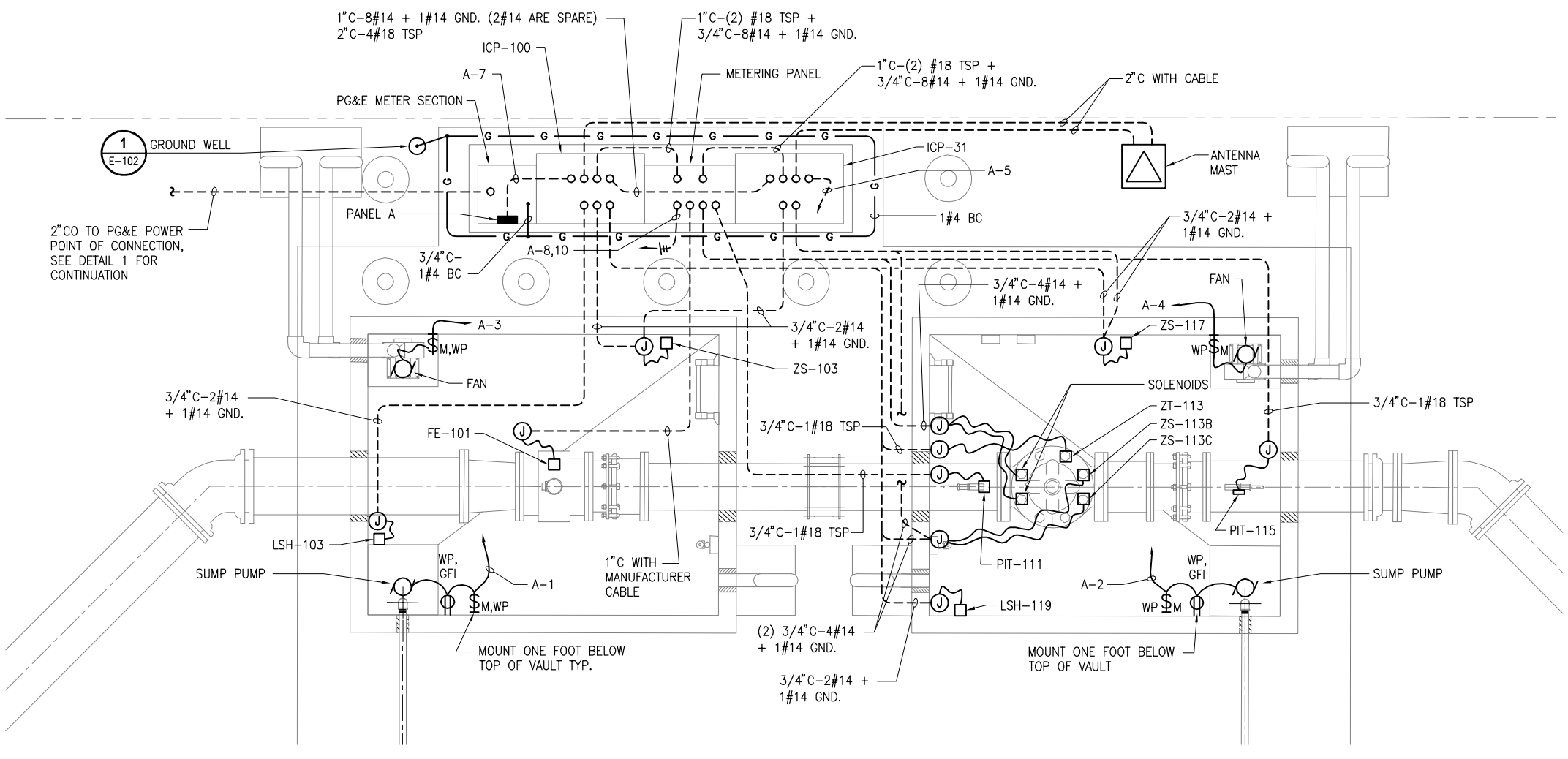

FLOW METER VAULT ELECTRICAL PLAN

2 / –

SCALE: 1/2" = 1'-0"

LEGEND

— — — —	CONDUIT, UNDERGROUND
———	CONDUIT, EXPOSED
——— G ———	GROUND CONDUCTOR
(M)	UTILTITY METER
(J)	JUNCTION BOX
$M	MOTOR RESET SWITCH
30A / 3P	CIRCUIT BREAKER, 3P – 3 POLE, MCP – MOTOR CIRCUIT PROTECTOR
———→ A–1	HOMERUN TO PANEL A, CIRCUIT 1
1 / E–102	REFER TO DETAIL 1 ON SHEET E–102

ABBREVIATIONS

A	AMPERE
BC	BARE COPPER
C	CONDUIT
CO	CONDUIT ONLY
(E)	EXISTING
GFI	GROUND FAULT INTERRUPTER
GND	GROUND
KW	KILOWATTS
LTG	LIGHTS
MISC	MISCELLANEOUS
NTS	NOT TO SCALE
P	POLE
PG&E	PACIFIC GAS AND ELECTRICITY
PH	PHASE
PLC	PROGRAMMABLE LOOK CONTROLLER
REC	RECEPTACLES
TSP	TWISTED SHIELDED PAIR
UON	UNLESS OTHERWISE NOTED
V	VOLT
W	WIRE
WP	WATER PROOF
ø	PHASE

REV	DATE	DESCRIPTION	APPR
		REF NUMBER	EXP DATE
	PROJECT ENGINEER	E9206	09/30/2011
	ALLEN J. RANDALL		

REGISTERED PROFESSIONAL ENGINEER ALLEN J. RANDALL No. E9206 Exp. 9/30/11 ELECTRICAL STATE OF CALIFORNIA

AECOM
AECOM USA, Inc.
1194 Pacific Street, Suite 204
San Luis Obispo, California 93401
T 805.542.9990
www.aecom.com

NIPOMO COMMUNITY SERVICES DISTRICT

NIPOMO COMMUNITY SERVICES DISTRICT
WATERLINE INTERTIE PROJECT - BP3

FLOW METERING STATION
ELECTRICAL PLANS

DESIGNED:	CU
DETAILED:	DD
CHECKED:	
APPROVED:	
DATE:	JULY 2010
AECOM PROJECT NO.	60061295
NCSD PROJECT NO.	
CADD STDS.	AECOM/BOYLE

E-101
SHEET
26 OF 33

0 1/2 1
IF THIS BAR DOES NOT MEASURE 1" THEN DRAWING IS NOT TO FULL SCALE

DWG: W:\Nipomo CSD (109096)\109096.70 Waterline Intertie Project Design\Design Phase\CAD\Phase3\BP-1_BLOSSER ROAD\100% Phase3\E-101.dwg Layout Name: E-101 - Plotted by: Frontfischer, Jim Date: 8/2/2010 - 7:45 AM
XREFS: WallaceBase - Surface-Section2 - NCSD-BD_BP3 - PRV_v2 IMAGES: NCSD LOGO-transparent_grayscale_small.jpg

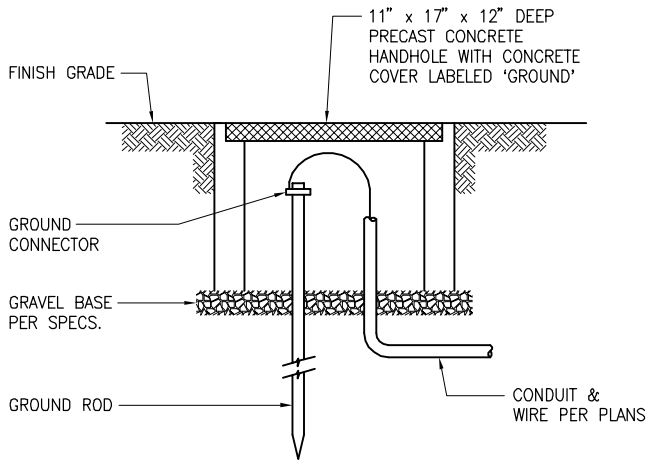

GROUND WELL DETAIL 1

NOT TO SCALE

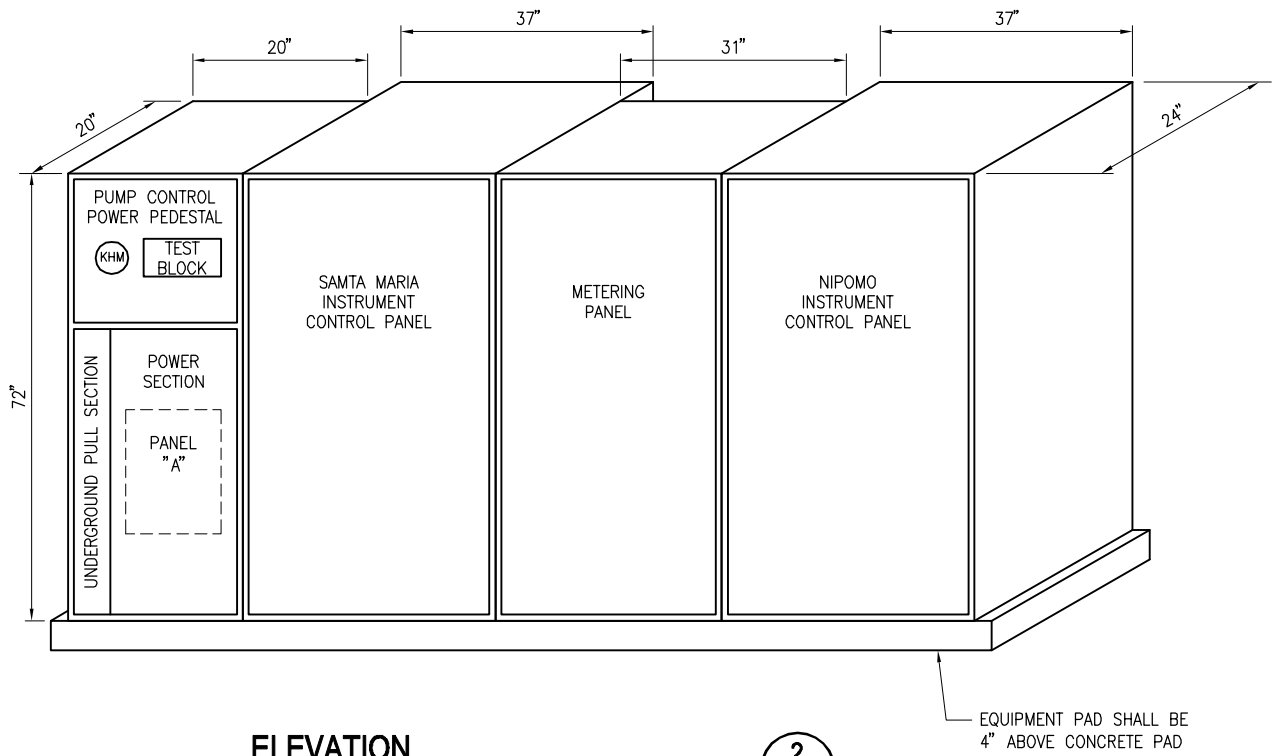

ELEVATION 2

NOT TO SCALE

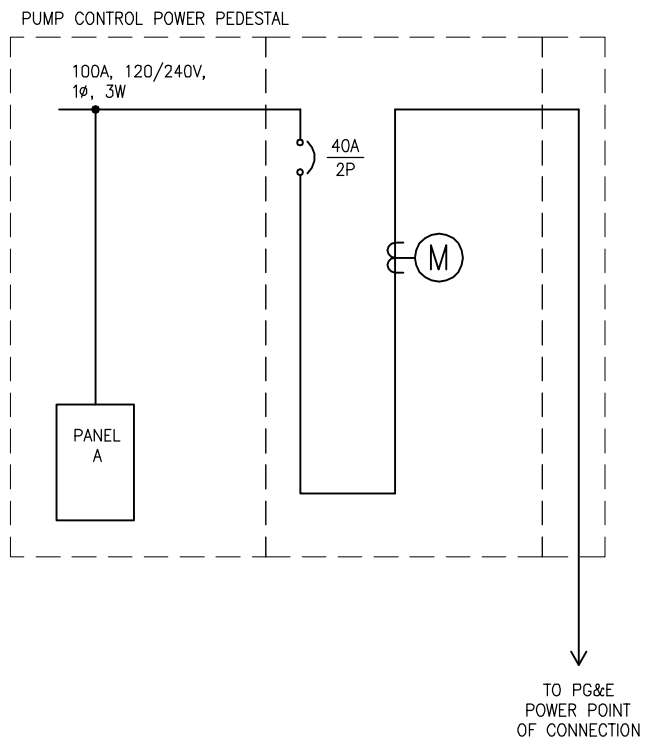

SINGLE LINE DIAGRAM 3

NOT TO SCALE

NAMEPLATE A MAIN MLO

BUS: AMPS 100A VOLTS: 120/240V, 1PH, 3W

	WATTAGE A	WATTAGE B	OUTLETS LTG	OUTLETS REC	OUTLETS MISC	10,000 AICS 20A–1P U.O.N.	OUTLETS LTG	OUTLETS REC	OUTLETS MISC	WATTAGE A	WATTAGE B	
SUMP PUMP	300				1	1 — 2			1	300		SUMP PUMP
FAN		300			1	3 — 4			1		300	FAN
ICP–31	500				1	5 — 6	5	1		320		PANEL LIGHTS + RECEPTACLES
ICP–100		500			1	7 — 8			1		300	FIT–101
SPARE	–					9 — 10			1	500		METERING PANEL
SPARE		–				11 — 12					–	SPARE
TOTAL LOAD	800	800								1120	600	TOTAL LOAD

3.3 KW + LCL – KW= 3.3 KW AT 240 VOLTS 1PH= 14 AMPS

0 1/2 1

IF THIS BAR DOES NOT MEASURE 1" THEN DRAWING IS NOT TO FULL SCALE

REV	DATE	DESCRIPTION	APPR
PROJECT ENGINEER		REG NUMBER	EXP DATE
ALLEN J. RANDALL		E9206	09/30/2011

PROFESSIONAL ENGINEER * REGISTERED * ELECTRICAL * STATE OF CALIFORNIA * No. E9206 Exp. 9/30/11

AECOM
AECOM USA, Inc.
1194 Pacific Street, Suite 204
San Luis Obispo, California 93401
T 805.542.9940
www.aecom.com

NIPOMO COMMUNITY SERVICES DISTRICT
WATERLINE INTERTIE PROJECT - BP3

FLOW METERING STATION
SINGLE LINE DIAGRAM & ELECTRICAL DETAILS

DESIGNED:	CU
DETAILED:	DD
CHECKED:	
APPROVED:	
DATE:	JULY 2010
AECOM PROJECT NO.	60061295
NCSD PROJECT NO.	
CADD STDS.	AECOM/BOYLE

E-102
SHEET
27 OF 33

DWG: W:\Nipomo CSD (10996)\10996.70 Waterline Intertie Project Design\Design Plans\CAD\Plansets\BP-3_BLOSSER ROAD\100% Planset\E-102.dwg Layout Name: E-102 – Plotted by: FroeFicher, Jim Date: 7/28/2010 – 5:53 PM
XREFS: NCSD-BD_BP3 IMAGES: NCSD LOGO-transparent_grayscale_small.jpg

INTERNATIONAL SOCIETY OF AUTOMATION (ISA) TABLE

IDENTIFICATION LETTERS

	FIRST–LETTER		SUCCEEDING–LETTERS		
	MEASURED OR INITIATING VARIABLE	MODIFIER	READOUT OR PASSIVE FUNCTION	OUTPUT FUNCTION	MODIFIER
A	ANALYSIS		ALARM		
B	BURNER, COMBUSTION		USER'S CHOICE	USER'S CHOICE	USER'S CHOICE
C	CONDUCTIVITY			CONTROL	
D	USER'S CHOICE	DIFFERENTIAL			
E	VOLTAGE		SENSOR (PRIMARY ELEMENT)		
F	FLOW RATE	RATIO (FRACTION)			
G	USER'S CHOICE		GLASS, VIEWING DEVICE		
H	HAND				HIGH
I	CURRENT (ELECTRICAL)		INDICATE		
J	POWER	SCAN			
K	TIME, TIME SCHEDULE	TIME RATE OF CHANGE		CONTROL STATION	
L	LEVEL		LIGHT		LOW
M	USER'S CHOICE	MOMENTARY			MIDDLE, INTERMEDIATE
N	USER'S CHOICE		PLC/RTU INPUT	USER'S CHOICE	NORMAL
O	USER'S CHOICE		ORIFICE, RESTRICTION		
P	PRESSURE, VACUUM		POINT (TEST) CONNECTION		
Q	QUANTITY	INTEGRATE, TOTALIZE			
R	RADIATION		RECORD		
S	SPEED, FREQUENCY	SAFETY		SWITCH	
T	TEMPERATURE			TRANSMIT	
U	MULTIVARIABLE		MULTIFUNCTION	MULTIFUNCTION	MULTIFUNCTION
V	VIBRATION, MECHANICAL ANALYSIS			VALVE,DAMPER LOUVER	
W	WEIGHT, FORCE		WELL		
X	UNCLASSIFIED	X AXIS	UNCLASSIFIED(*)	UNCLASSIFIED(*)	UNCLASSIFIED(*)
Y	EVENT, STATE OR PRESENCE	Y AXIS		RELAY, COMPUTE CONVERT	
Z	POSITION, DIMENSION	Z AXIS		DRIVER, ACTUATOR, UNCLASSIFIED FINAL CONTROL ELEMENT	

INSTRUMENT IDENTIFICATION

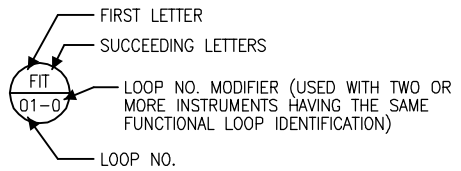

FIELD MOUNTED INSTRUMENT

REAR OF PANEL MOUNTED INSTRUMENT

FRONT OF PANEL MOUNTED INSTRUMENT

ILLUMINATED HANDSWITCH

PLC (PROGRAMMABLE LOGIC CONTROLLER)

SCS (SUPERVISORY CONTROL STATION)

INTERLOCK

INSTRUMENT LINE SYMBOLS

PRIMARY PROCESS FLOW

SECONDARY PROCESS FLOW, CONNECTION TO PROCESS FLOW, MECHANICAL LINK OR INSTRUMENT SUPPLY

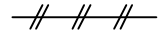
PNEUMATIC SIGNAL OR UNDEFINED SIGNAL FOR PROCESS FLOW DIAGRAMS

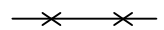
CAPILLARY TUBING (FILLED SYSTEM)

ELECTRIC SIGNAL (DISCRETE)

ELECTRIC SIGNAL (ANALOG, TSP)

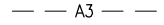

ELECTRIC SIGNAL (ANALOG, TST)

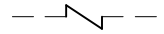
DATA COMMUNICATION

BUILDING OR FACILITY BOUNDARY

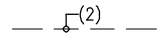

MULTI–CIRCUIT ELECTRIC SIGNALS (NUMBER OF SIGNALS ILLUSTRATED IN PARENTHESIS)

LOGICAL OR HARDWIRE SIGNAL NUMBER (SHOWN SIGNAL "01" ORIGINATED IN DWG. I–5)

LOGICAL OR HARDWIRE SIGNAL NUMBER (SHOWN SIGNAL "01" SENT TO DWG. I–5)

ACTUATORS OR OPERATORS

MOTOR (MODULATING)

MOTOR (OPEN/CLOSE)

SOLENOID

PNEUMATIC

PUMPS & COMPRESSORS

CENTRIFUGAL PUMP

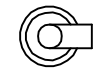
VERTICAL TURBINE PUMP

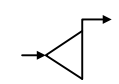
COMPRESSOR OR BLOWER

SUMP PUMP

PRIMARY ELEMENTS

ULTRASONIC LEVEL SENSOR

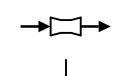
FLOW TUBE

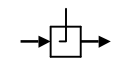
ANNUBAR

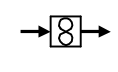
PROPELLER METER

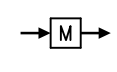

MAGNETIC FLOW METER

FLOOD SWITCH

VALVES & GATES

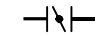
BUTTERFLY

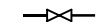
GATE

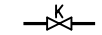

KNIFE GATE

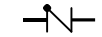
SWING CHECK

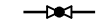
BALL

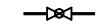
GLOBE

DIAPHRAGM

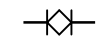
PLUG

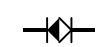
ECCENTRIC PLUG

LUBRICATED PLUG

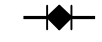
3–WAY GLOBE

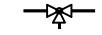
BALL CHECK

PRESSURE RELIEF VALVE

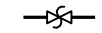
PINCH VALVE

MOTOR OPERATED BUTTERFLY (MODULATING)

MOTOR OPERATED BUTTERFLY (OPEN/CLOSE)

PRESSURE REDUCING REGULATOR

SOLENOID CONTROL

3–WAY SOLENOID

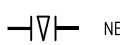
NEEDLE VALVE

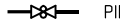
PINCH VALVE

DIAPHRAGM ACTUATED

PRESSURE RELIEF

EDUCTOR

INSTRUMENT ABBREVIATIONS

AL	ALARM
AC	ALTERNATING CURRENT
AI	ANALOG INPUT
AO	ANALOG OUTPUT
AM	AUTO–MANUAL
AMR	AUTO–MANUAL–REMOTE
AVG	AVERAGE
BW	BACKWASH
CA	COMMON ALARM
C	CLOSE
CCC	CENTRAL CONTROL CENTER
DC	DIRECT CURRENT
DI	DISCRETE INPUT
DO	DISCRETE OUTPUT
ETM	ELAPSED TIME METER
HOA	HAND–OFF–AUTO
HLO	HIGH–LOW–OFF
HL	HIGH–LOW
HLOR	HIGH–LOW–OFF–REMOTE
I/O	INPUT/OUTPUT
LL	LOCAL LEVEL
LP	LOCAL PRESSURE
LR	LOCAL–REMOTE
LOS	LOCK–OUT–STOP
LOR	LOCAL–OFF–REMOTE
LPU	LINE PROTECTION UNIT
LCP	LOCAL CONTROL PANEL
MCC	MOTOR CONTROL CENTER
MCS	MASTER CONTROL STATION
MODEM	MODULATE–DEMODULATE
OIC	OPEN–INTERMEDIATE–CLOSED
OSCA	OPEN–STOP–CLOSE–AUTO
OOR	ON–OFF–REMOTE
O	OPEN
OO	ON–OFF
OOA	ON–OFF–AUTO
ORO	OFF–RESET–ON
OC	OPEN–CLOSE
OSC	OPEN–STOP–CLOSE
OSCR	OPEN–STOP–CLOSE–REMOTE
OCA	OPEN–CLOSE–AUTO
P/A	PULSE TO ANALOG
PF	PULSE FREQUENCY
PD	PULSE DURATION
PID	PROPORTIONAL–INTEGRAL–DERIVATIVE
PS	DC POWER SUPPLY
P&ID	PROCESS & INSTRUMENTATION DIAGRAM
PRV	PRESSURE RELIEF VALVE
PRPRV	PRESSURE REDUCING–PRESSURE RELIEF VALVE
RIOP	REMOTE I/O PANEL
RSP	REMOTE SET POINT
RTD	RESISTANCE TEMPERATURE DETECTOR
RTDI	RTD INPUT MODULE
RTU	REMOTE TERMINAL UNIT
SCS	SUPERVISORY CONTROL STATION
SS	START–STOP
SP	SET POINT
TSP	TWISTED SHIELDED PAIR
TST	TWISTED SHIELDED TRIAD
TURB	TURBIDITY
TPC	TIME PROPORTIONAL CONTROL
TOT	TOTALIZATION
TEMP	TEMPERATURE

AECOM WATER

FOR PRELIMINARY USE ONLY

NOT TO BE USED FOR CONSTRUCTION

DATE: JULY 2010

90% PRELIMINARY DESIGN PLANSET

0 1/2 1

IF THIS BAR DOES NOT MEASURE 1" THEN DRAWING IS NOT TO FULL SCALE

REV	DATE	DESCRIPTION	APPR
PROJECT ENGINEER		REF NUMBER	EXP DATE
EFREM SORKIN		E14555	06/30/2012

PROFESSIONAL ENGINEER EFREM N. SORKIN No. E14555 Exp. 6/30/12 ELECTRICAL STATE OF CALIFORNIA

AECOM

AECOM USA, Inc.
1194 Pacific Street, Suite 204
San Luis Obispo, California 93401
T 805.542.9840 F 805.542.9990
www.aecom.com

NIPOMO COMMUNITY SERVICES DISTRICT

NIPOMO COMMUNITY SERVICES DISTRICT WATERLINE INTERTIE PROJECT - BP3

INSTRUMENTATION LEGEND AND SYMBOLS

DESIGNED:	ES
DETAILED:	MG
CHECKED:	
APPROVED:	
DATE:	JULY 2010
AECOM PROJECT NO.	60061295
NCSD PROJECT NO.	
CADD STDS.	AECOM/BOYLE

N-001

SHEET 28 OF 33

DWG: W:\Nipomo CSD (19996)\\19996.70 Waterline Intertie Project Design\Design Phase\CAD\Planset\BP-3_BLOSSER ROAD\100% Planset\N-001.dwg Layout Name: N-001 – Plotted by: Froelicher, Jim Date: 7/28/2010 - 3:58 PM
XREFS: NCSD-BD_BP3
IMAGES: NCSD LOGO-Horizontal_grayscale_small.jpg

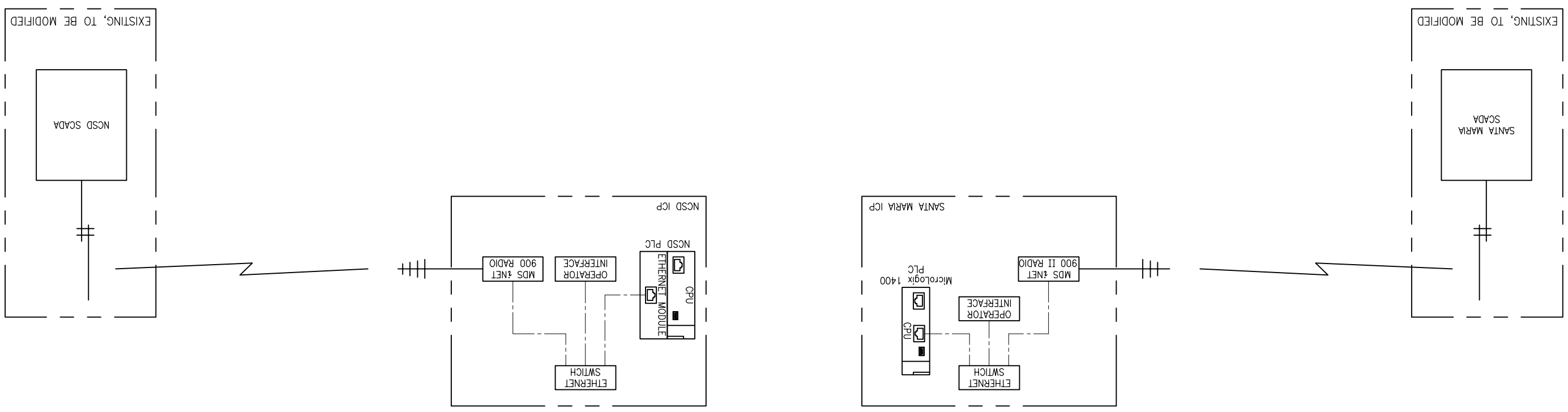

AECOM WATER

FOR PRELIMINARY USE ONLY

NOT TO BE USED FOR CONSTRUCTION

DATE: JULY 2010

90% PRELIMINARY DESIGN PLANSET

IF THIS BAR DOES NOT MEASURE 1" THEN DRAWING IS NOT TO FULL SCALE

0 1/2 1

NIPOMO COMMUNITY SERVICES DISTRICT
WATERLINE INTERTIE PROJECT - BP3

COMMUNICATION BLOCK DIAGRAM

DESIGNED: ES
DETAILED: MB
CHECKED:
APPROVED:
DATE: JULY 2010
AECOM PROJECT NO. 60061295
NCSD PROJECT NO.
CADD STDS. AECOM/BOYLE

N-101
SHEET 29 OF 33

AECOM
AECOM USA, Inc.
5001 E. Commercenter Dr. Suite 100
Bakersfield, California 93309
T 661-325-7253 F 661-395-0359
www.aecom.com

REGISTERED PROFESSIONAL ENGINEER
EFREM SORKIN
No. E14555
Exp. 6/30/12
STATE OF CALIFORNIA
ELECTRICAL

REV	DATE	DESCRIPTION	APPR
4			
3			
2			
1			

PROJECT ENGINEER: EFREM SORKIN
REG NUMBER: E14555
EXP DATE: 06/30/2012

DWG: W:\Nipomo CSD (19996)\19996.70 Waterline Intertie Project Design\Design Plans\CAD\Planset\BP-3_BLOSSER ROAD\100% Planset\N-101.dwg Layout Name: N-101 - Plotted by: Froelicher, Jim Date: 7/28/2010 - 4:01 PM
XREFS: NCSD-BD_BP3 IMAGES: NCSD LOGO-transparent_grayscale_small.jpg -

DWG: W:\Nipomo CSD (19996)\19996.70 Waterline Intertie Project Design\Design Plans\CAD\Planset\BP-3_BLOSSER ROAD\100% Planset\N-102.dwg Layout Name: N-102 – Plotted by: Froelicher, Jim Date: 7/28/2010 – 4:04 PM
XREFS: NCSD-BD_BP3 IMAGES: NCSD LOGO-transparent_grayscale_small.jpg –

NOTES

1. MOUNTED AT METERING PANEL
2. SIGNAL TO BE REPLICATED BY RELAY @ SMICP-100
3. SIGNAL TO BE REPLICATED BY RELAY @ ICP-31

AECOM WATER

FOR PRELIMINARY USE ONLY

NOT TO BE USED FOR CONSTRUCTION

DATE: JULY 2010

90% PRELIMINARY DESIGN PLANSET

0 1/2 1
IF THIS BAR DOES NOT MEASURE 1" THEN DRAWING IS NOT TO FULL SCALE

REV	DATE	DESCRIPTION	APPR
4			
3			
2			
1			

PROJECT ENGINEER	REG NUMBER	EXP DATE
EFREM SORKIN	E14555	06/30/2012

REGISTERED PROFESSIONAL ENGINEER EFREM SORKIN No. E14555 Exp. 6/30/12 ELECTRICAL STATE OF CALIFORNIA

AECOM
AECOM USA, Inc.
1194 Pacific Street, Suite 204
San Luis Obispo, California 93401
T 805.542.9840 F 805.542.9990
www.aecom.com

NIPOMO COMMUNITY SERVICES DISTRICT
WATERLINE INTERTIE PROJECT - BP3

FLOW CONTROL VALVE AND METERING STATION P&ID

DESIGNED: ES
DETAILED: MG
CHECKED:
APPROVED:
DATE: JULY 2010

AECOM PROJECT NO. 60061295

NCSD PROJECT NO.

CADD STDS. AECOM/BOYLE

N-102

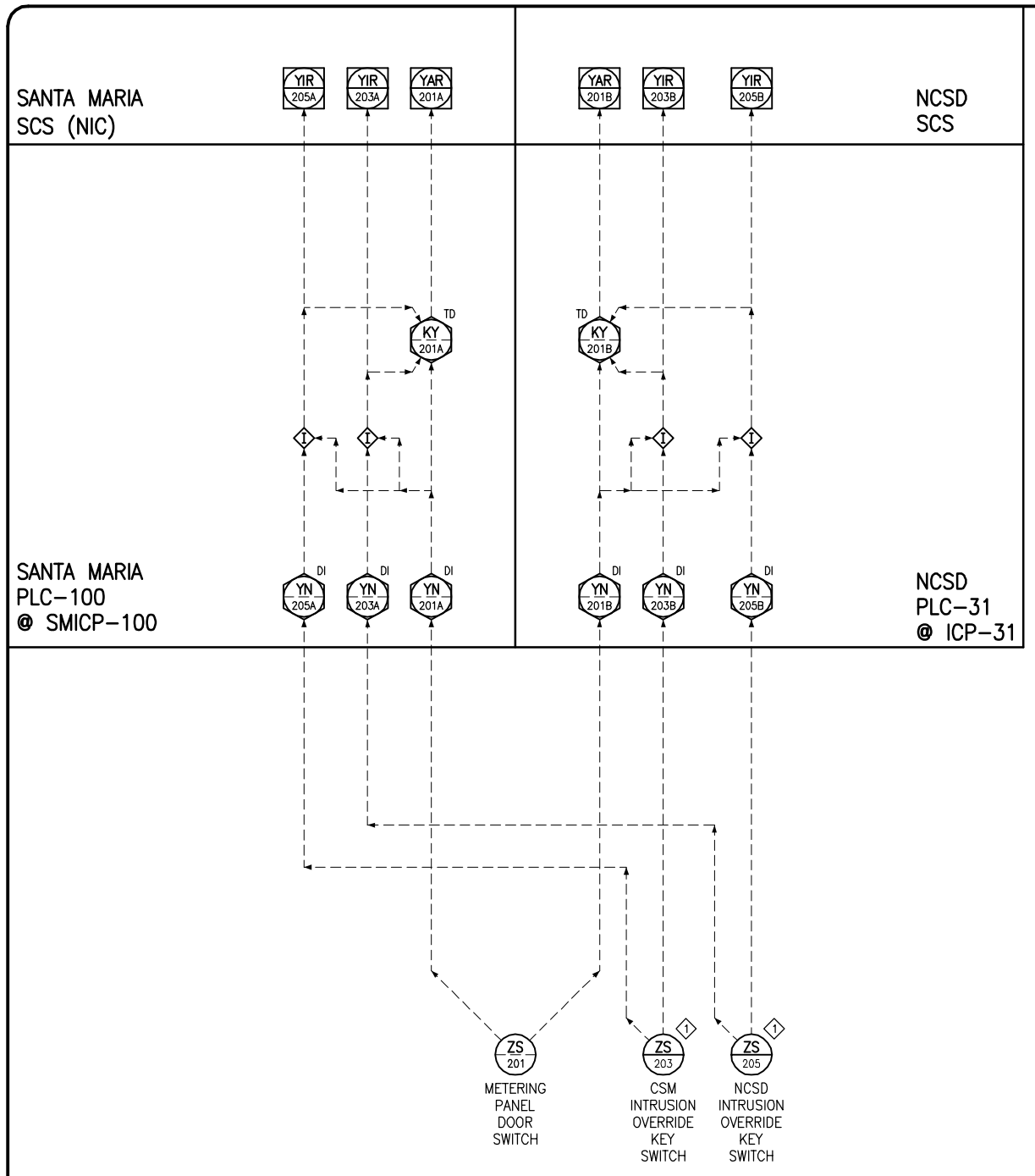

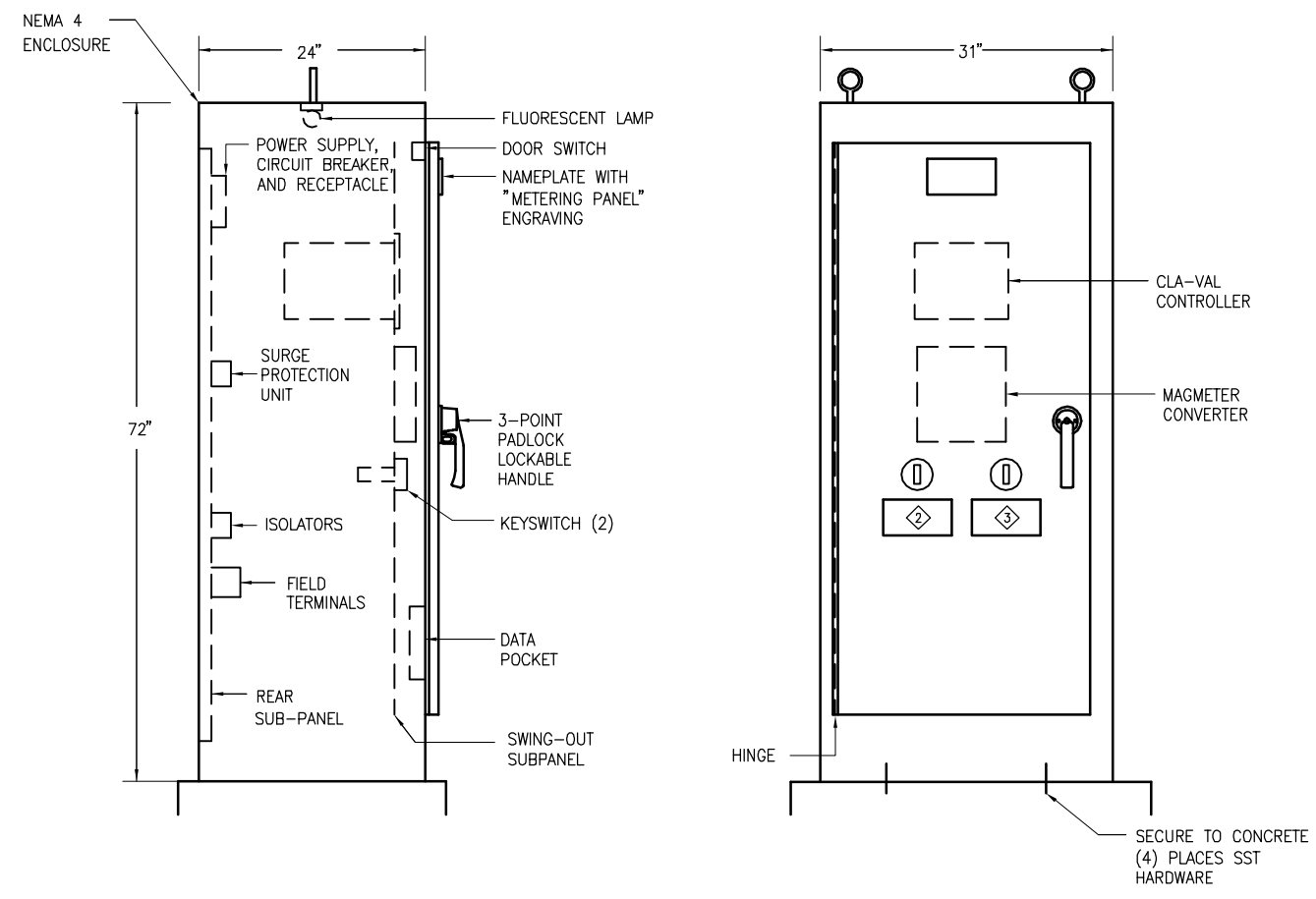

METERING PANEL

NTS

1

NOTES

1. MOUNTED AT METERING PANEL
2. NAMEPLATE "CSM"
3. NAMEPLATE "NCSD"

AECOM WATER

FOR PRELIMINARY USE ONLY

NOT TO BE USED FOR CONSTRUCTION

DATE: JULY 2010

90% PRELIMINARY DESIGN PLANSET

0 1/2 1

IF THIS BAR DOES NOT MEASURE 1" THEN DRAWING IS NOT TO FULL SCALE

REV	DATE	DESCRIPTION	APPR
PROJECT ENGINEER		REF NUMBER	EXP DATE
EFREM SORKIN		E14555	06/30/2012

PROFESSIONAL ENGINEER * EFREM N. SORKIN * ELECTRICAL * STATE OF CALIFORNIA
No. E14555 Exp. 6/30/12

AECOM
AECOM USA, Inc.
1194 Pacific Street, Suite 204
San Luis Obispo, California 93401
T 805.542.9840 F 805.542.9990
www.aecom.com

NIPOMO COMMUNITY SERVICES DISTRICT

NIPOMO COMMUNITY SERVICES DISTRICT
WATERLINE INTERTIE PROJECT - BP3

METERING PANEL LAYOUT
METERING PANEL INTRUSION P&ID

DESIGNED:	ES
DETAILED:	MG
CHECKED:	
APPROVED:	
DATE:	JULY 2010
AECOM PROJECT NO.	60061295
NCSD PROJECT NO.	
CADD STDS.	AECOM/BOYLE

N-103
SHEET 31 OF 33

DWG: W:\Nipomo CSD (19996)\19996.70 Waterline Intertie Project Design\Design Plans\CAD\Planset\BP-3_BLOSSER ROAD\100% Planset\N-103.dwg Layout Name: N-103 - Plotted by: Froelicher, Jim Date: 7/28/2010 - 4:07 PM
XREFS: NCSD-BD_BP3 IMAGES: NCSD LOGO-transparent_grayscale_small.jpg

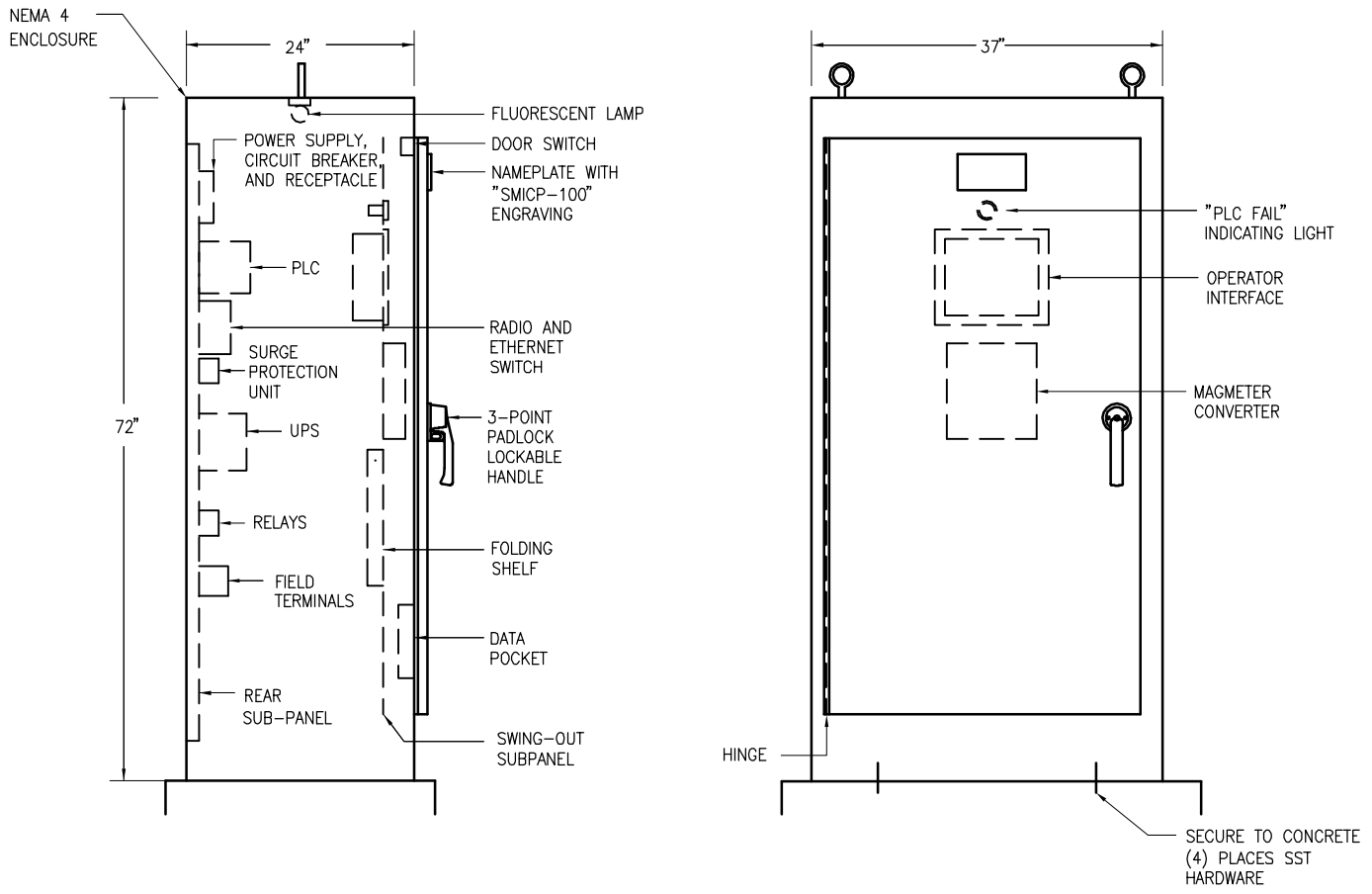

SANTA MARIA INSTRUMENT CONTROL PANEL (ICP-100) LAYOUT (1)

NTS

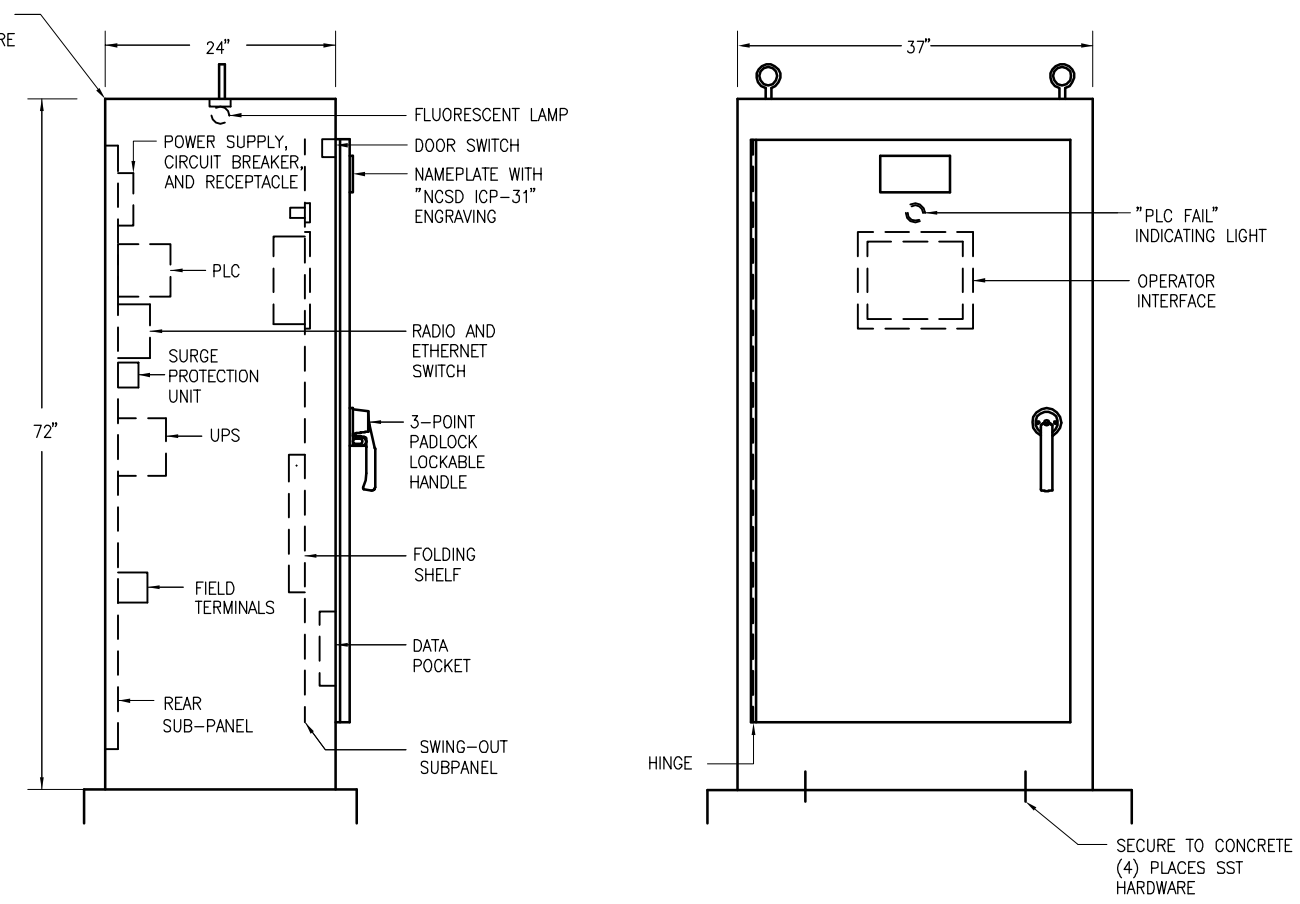

NCSD INSTRUMENT CONTROL PANEL (ICP-31) LAYOUT (2)

NTS

AECOM WATER

FOR PRELIMINARY USE ONLY

NOT TO BE USED FOR CONSTRUCTION

DATE: JULY 2010

90% PRELIMINARY DESIGN PLANSET

0 1/2 1

IF THIS BAR DOES NOT MEASURE 1" THEN DRAWING IS NOT TO FULL SCALE

REV	DESCRIPTION	APPR
PROJECT ENGINEER	REG NUMBER	EXP DATE
EFREM SORKIN	E14555	06/30/2012

PROFESSIONAL ENGINEER * EFREM M. SORKIN * No. E14555 * Exp. 6/30/12 * ELECTRICAL * STATE OF CALIFORNIA

AECOM

AECOM USA, Inc.
1194 Pacific Street, Suite 204
San Luis Obispo, California 93401
T 805.542.9840 F 805.542.9990
www.aecom.com

NIPOMO COMMUNITY SERVICES DISTRICT
WATERLINE INTERTIE PROJECT - BP3

INSTRUMENT DETAILS

DESIGNED:	ES
DETAILED:	MG
CHECKED:	
APPROVED:	
DATE:	JULY 2010
AECOM PROJECT NO.	60061205
NCSD PROJECT NO.	
CADD STDS.	AECOM/BOYLE

N-501

SHEET 32 OF 33

DWG: W:\Nipomo CSD (19996)\19996.70 Waterline Intertie Project Design\Design Plans\CAD\Planset\BP-3_BLOSSER ROAD\100% Planset\N-501.dwg Layout Name: N-501 - Plotted by: Froelicher, Jim Date: 7/28/2010 - 4:10 PM
XREFS: NCSD-BD_BP3 IMAGES: NCSD LOGO-transparent_grayscale_small.jpg

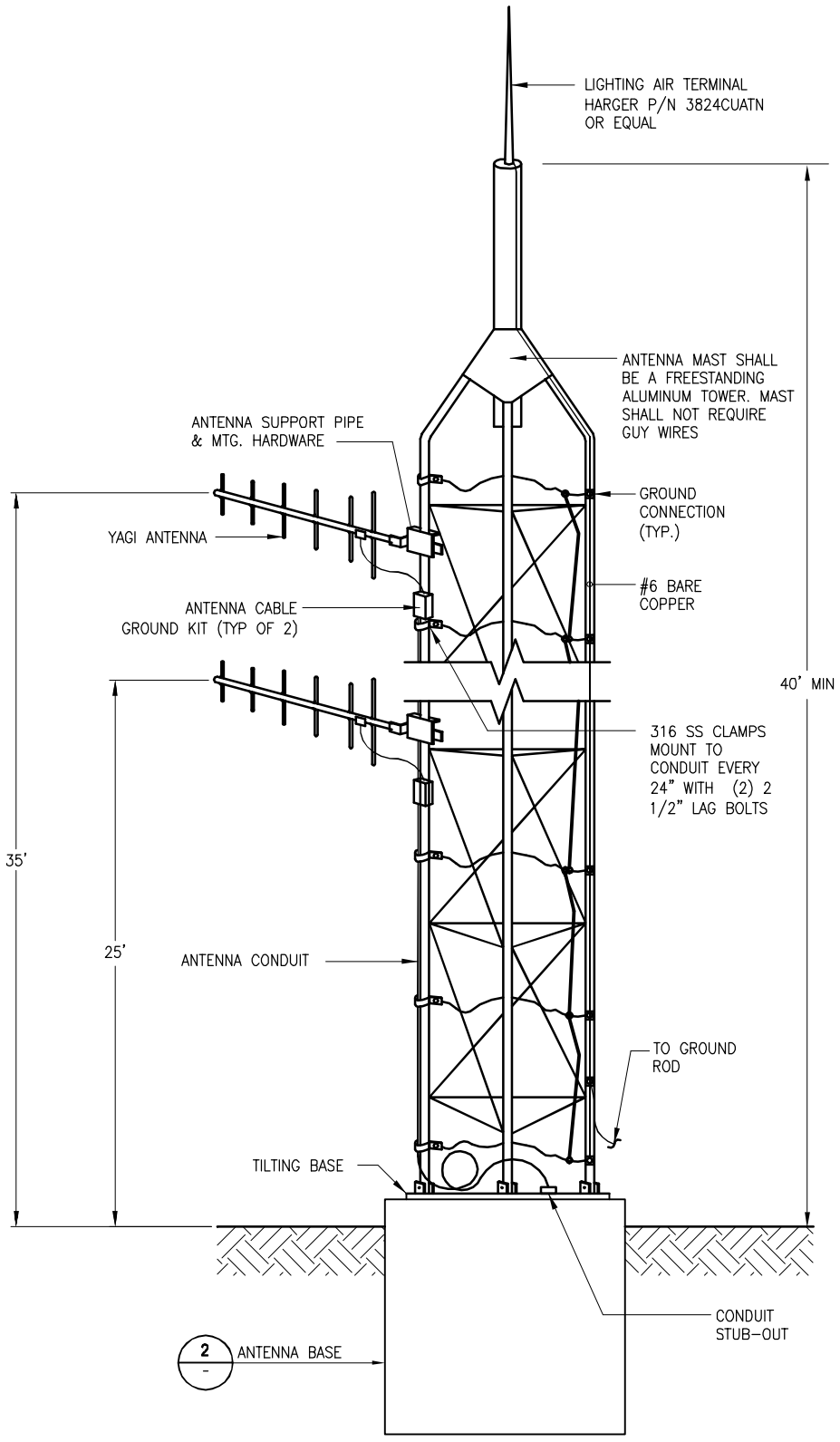

ANTENNA MAST DETAIL (UNIVERSAL TOWERS MODEL #4-30) 1

NOT TO SCALE

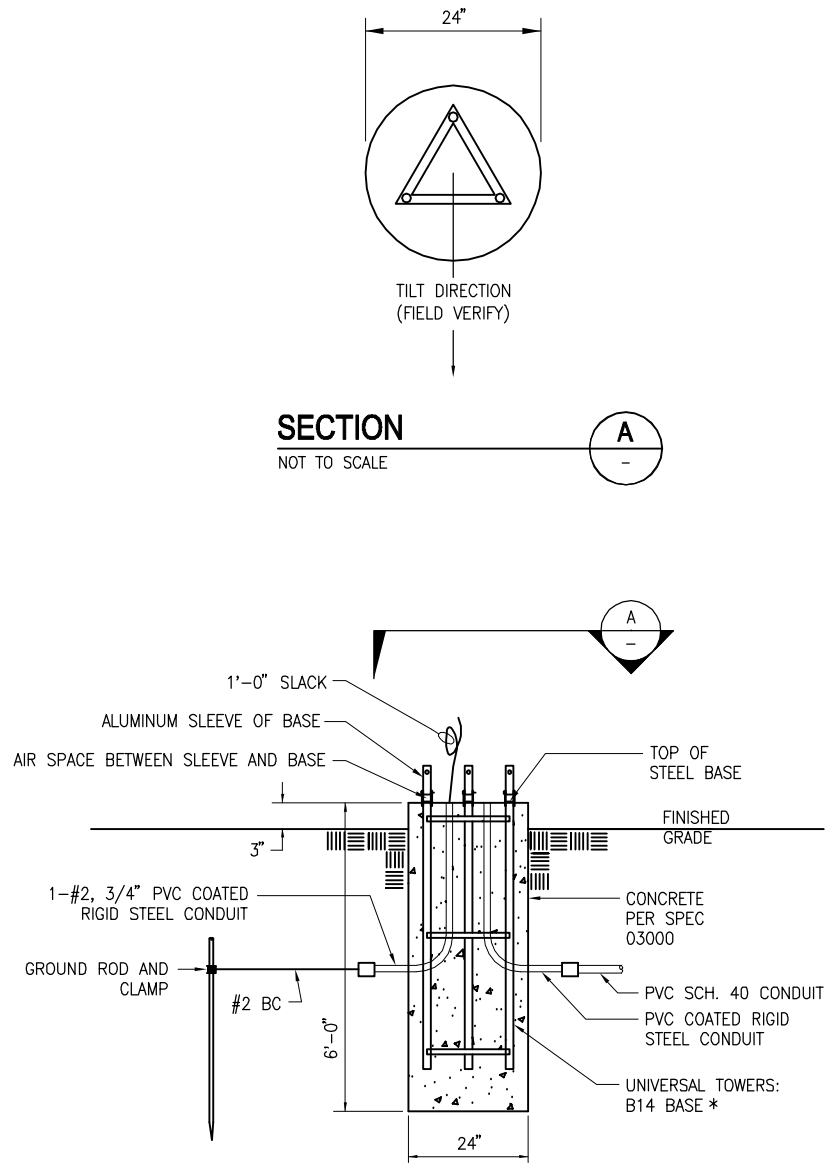

SECTION A

NOT TO SCALE

NOTE: CONCRETE TO BE POURED TO TOP OF TUBES ON THE BASE. (THE ONLY AIR SPACE SHOULD BE BETWEEN THE BOTTOM OF THE ALUMINUM SLEEVES OF THE BASE AND THE TOP OF THE STEEL TUBES OF THE BASE).

ANTENNA BASE DETAIL 2

NOT TO SCALE

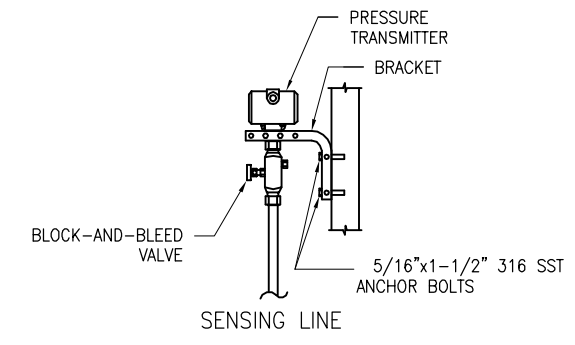

PRESSURE TRANSMITTER MOUNTING 3

NOT TO SCALE

AECOM WATER

FOR PRELIMINARY USE ONLY

NOT TO BE USED FOR CONSTRUCTION

DATE: JULY 2010

90% PRELIMINARY DESIGN PLANSET

0 1/2 1

IF THIS BAR DOES NOT MEASURE 1" THEN DRAWING IS NOT TO FULL SCALE

REV	DESCRIPTION	APPR
PROJECT ENGINEER	REG NUMBER	EXP DATE
EFREM SOKKLIN	E14555	06/30/2012

PROFESSIONAL ENGINEER * EFREM SOKKLIN * No. E14555 Exp. 6/30/12 * ELECTRICAL * STATE OF CALIFORNIA

AECOM
AECOM USA, Inc.
1194 Pacific Street, Suite 204
San Luis Obispo, California 93401
T 805.542.9840 F 805.542.9990
www.aecom.com

NIPOMO COMMUNITY SERVICES DISTRICT
WATERLINE INTERTIE PROJECT - BP3

ANTENNA MOUNTING DETAILS

DESIGNED:	ES
DETAILED:	MG
CHECKED:	
APPROVED:	
DATE:	JULY 2010
AECOM PROJECT NO.	60061205
NCSD PROJECT NO.	
CADD STDS.	AECOM/BOYLE

N-502
SHEET 33 OF 33

DWG: W:\Nipomo CSD (19996)\19996.70 Waterline Intertie Project Design\Design Plans\CAD\Planset\BP-3_BLOSSER ROAD\100% Planset\N-502.dwg Layout Name: N-502 - Plotted by: Froelicher, Jim Date: 7/28/2010 - 4:12 PM
XREFS: NCSD-BD_BP3 IMAGES: NCSD LOGO-transparent_grayscale_small.jpg