# SECTION 400722 FLEXIBLE PIPE COUPLINGS

## PART 1 - GENERAL

### A. Description

This section includes materials and installation of flexible gasketed sleeve-type compression pipe couplings for ductile-iron pipe; flexible expansion joints; and couplings for connecting different pipe materials.

### B. Related Work Specified Elsewhere

1. Painting and Coating: 099000.
2. Cold-Applied Wax Tape Coating: 099752.
3. Polyethylene Sheet Encasement (AWWA C105): 099754.
4. Fusion-Bonded Epoxy Linings and Coatings: 099761.
5. General Piping Requirements: 400500.
6. Pressure Testing of Piping: 400515.

### C. Submittals

1. Submit shop drawings in accordance with the General Conditions and Section 013300.
2. Submit manufacturer's catalog data on flexible pipe couplings and joints. Show manufacturer's model or figure number for each type of coupling or joint for each type of pipe material for which couplings and joints are used. Show coatings.
3. Submit manufacturer's recommended torques to which the coupling bolts shall be tightened for the flexible gasketed sleeve-type compression pipe couplings.
4. Show materials of construction by ASTM reference and grade. Show dimensions.
5. Show number, size, and material of construction of tie rods and lugs for each thrust harness on the project.

PART 2 - MATERIALS

A. Coupling System Design and Component Unit Responsibility

The coupling manufacturer shall furnish the gaskets, bolts, nuts, glands, end rings, and hardware for pipe couplings of all types and shall design these components as an integral system. Design the gaskets for the coupling and appropriately size to provide a watertight seal at the design pressure and temperature. Ship gaskets, bolts, nuts, glands, end rings, and hardware for pipe couplings with the pipe coupling and clearly label indicating the origin of the material, including place and date of manufacture. Package the manufacturer's printed installation instructions with each pipe coupling.

B. Ductile-Iron Flexible Pipe Couplings

1. Couplings shall have center sleeves and end rings made of ductile iron conforming to AWWA C219, Section 4.

2. Sleeve bolts shall be Type 316 stainless steel per AWWA C219, Section 4.

C. Joint Harnesses

1. Tie bolts or studs shall be as shown in the following table. Bolt or stud material shall conform to ASTM A193, Grade B7. Nuts shall conform to ASTM A194, Grade 2H. Lug material shall conform to ASTM A36, ASTM A283, Grade B, C, or D, or ASTM A285, Grade C. Lug dimensions for steel pipe shall be as shown in AWWA Manual M11 (2004 edition), Figure 13-20, using the number and size of lugs as tabulated below.

| **TIE BOLTS OR STUD REQUIREMENTS FOR FLEXIBLE PIPE COUPLINGS FOR DUCTILE IRON PIPE** | | | | | | |
|---|---|---|---|---|---|---|
| | **Tie Bolt or Stud Minimum Requirements** | | | | | |
| | **150 psi(1)** | | | **300 psi(2) Pipe** | | |
| **Nominal Pipe Size (inches)** | **No. Bolts or Studs** | **Size (inch)** | **Ear(3) Type** | **No. Bolts or Studs** | **Size (inch)** | **Ear(3) Type** |
| 4 | 2 | 5/8 | A | 2 | 5/8 | A |
| 8 | 2 | 5/8 | A | 2 | 5/8 | A |
| 12 | 2 | 5/8 | A | 4 | 5/8 | A |
| 16 | 4 | 5/8 | A | 5 | 3/4 | B |
| 18 | 4 | 3/4 | B | 8 | 3/4 | B |
| 24 | 5 | 7/8 | B | 8 | 7/8 | B |
| (1) Use ASME B16.1 Class 125 flanges.<br>(2) Use ASME B16.1 Class 250 flanges.<br>(3) Ear type as shown in the detail on the last page of Section 400722. | | | | | | |

2. Select number and size of bolts based on the test pressure shown in Section 400515. Stagger bolts equally around pipe circumference. Where odd number is tabulated, place odd bolt at top. For test pressures less than or equal to 150 psi, use the 150-psi design in the table above. For test pressures between 150 and 300 psi, use the 300-psi design in the table above.

3. Provide washer for each nut. Washer material shall be the same as the nuts. Minimum washer thickness shall be 1/8 inch.

D. Flexible Pipe Couplings for Plain-End Ductile-Iron Pipe

1. Couplings for pipe 12 inches and smaller shall be cast iron, Dresser Style 253 or 253 long sleeve, Smith-Blair Type 441, Baker Series 228, or equal.

2. Couplings for pipe larger than 12 inches shall be cast iron or steel, Dresser Style 38 or 253, Smith-Blair Style 411, Baker Series 228, or equal.

E. Transition Couplings

Couplings for connecting different pipes having different outside diameters shall be steel: Dresser Style 62 or 162, Smith-Blair Series 413, Baker Series 212 or 220, or equal. Couplings shall have an internal full circumference ring pipe stop at the midpoint of the coupling. Inside diameter of coupling pipe stop shall equal inside diameter of smaller diameter pipe.

F. Flanged Coupling Adapters for Cast- and Ductile-Iron Pipe

1. Adapters for cast- and ductile-iron pipe 12 inches and smaller shall be cast iron: Dresser Style 127, Smith-Blair Series 912, or equal.

2. Adapters for cast- and ductile-iron pipe larger than 12 inches shall be steel: Dresser Style 128, Smith-Blair Type 913, or equal.

3. Flange ends shall match the flange of the connecting pipe; see detail piping specifications.

G. Dismantling Joints

1. The dismantling joint shall consist of a flanged steel spigot piece, a flanged sleeve, and a follower ring containing a gasket through which the spigot piece slides into the sleeve. The joint shall accommodate up to 2 inches of longitudinal movement. The longitudinal adjustability shall be provided by a telescopic action of a flanged spigot and associated sleeve, which inserts into the spigot. A system of tie bolts or rods shall connect the end flange on the sleeve to the end flange on the spigot piece. Provide washers and nuts on the tie bolts on both sides of the sleeve and flange and the spigot end flange to allow for adjustment of the extension length for the sleeve.

2. The minimum design pressure shall be the same as the adjacent piping. Design stresses shall not exceed 40% of the yield strength of the materials. Minimum factory test pressure shall be 150% of the design pressure.

3. The gasket shall be compressed by a separate bolting and gland system, independent of the tie bolts. Gasket shall be EPDM.

4. Dismantling joints shall have a spigot piece made of steel conforming to ASTM A36, A53 (Type E or S), or A283, Grade C having a minimum yield strength of 30,000 psi and a flange adapter and follower ring made of ductile iron conforming to ASTM A536, Grade 65-45-12.

5. Sleeve and follower ring bolts shall have a minimum yield strength of 105,000 psi, a minimum tensile strength of 125,000 psi, and shall conform to ASTM A193, Grade B7.

6. Steel flanges and gasket follower rings shall be cast, forged, or hot rolled in one piece. Do not use flanges or rings fabricated from two or more shapes. Flanges shall conform to ANSI Classes 125 and 150.

7. Wall thickness of spigot piece and sleeve shall be at least that specified for the size of pipe in which the coupling is to be used.

8. Manufacturers: Romac Industries Style DJ400, DJ405, or equal.

## PART 3 - EXECUTION

### A. Shipment and Storage of Flexible Pipe Couplings and Dismantling Joints

1. Inspect on receipt for damage in shipment and conformance with quantity and description on the shipping notice and order. Unload carefully to the ground without dropping. Do not load or unload by inserting forklift tines or lifting chains inside the waterway. Use nonmetallic slings, padded chains, or padded forklift tines to lift items. Lift with eyebolts or rods through flange holes or chain hooks at ends.

2. Protect from weather and the accumulation of dirt, rocks, and debris. Do not expose rubber seats to sunlight or ozone for more than 30 days. Also, see the manufacturer's specific storage instructions.

3. Make sure flange faces, joint sealing surfaces, body seats, and disc seats are clean.

### B. Installation of Flexible Pipe Couplings and Dismantling Joints

1. Clean oil, scale, rust, and dirt from pipe ends. Clean gaskets in flexible pipe couplings before installing.

2. Do not spring flanges or ends of connecting piping into position. Separately work connecting piping system into position to bring the piping flanges or ends into alignment with the matching coupling flanges or joints. Do not move couplings to achieve piping alignment.

3. Line up pipe flange bolt holes with coupling or joint flange bolt holes within 1/16 inch maximum offset from the center of the bolt hole to permit insertion of bolts without applying any external force to the piping.

4. Flange face separation shall be within the gasket spacing ±1/16 inch. Use only one gasket per flanged connection.

5. Lubricate bolt threads with graphite and oil prior to installation.

6. Thoroughly clean contact surfaces of gaskets and pipe ends of flexible pipe couplings just prior to assembly for a distance equal to center-sleeve length plus 2 inches. Install flexible pipe couplings such that the center sleeves are centered over the gap between the ends of the pipes being joined. Install centerline gaps per AWWA C219, Table 5 unless otherwise indicated. Install harnessed flexible pipe couplings in straight-run piping such that 50% of the total travel of the center sleeve or permissible centerline gap is available for expansion and 50% of the travel is available for contraction. In assembling the bolted or studded harnesses of flexible pipe couplings, tighten the nuts gradually and equally at diametrically opposite sides until snug. Do not misalign the harness bolts or studs. Tighten such that bolts or studs carry equal loads. Do not use wrenches or power fastening tools to tighten the nuts.

C. Painting and Coating

1. Coat buried flexible pipe couplings (including joint harness assemblies), transition couplings, segmented sleeve couplings, and flanged coupling adapters per Section 099000, System No. 21. Coat buried bolt threads, tie bolt threads, and nuts per Section 099000, System No. 24. Then wrap the couplings with cold-applied wax tape per Section 099752 and with polyethylene wrap per Section 099754.

2. Coat flexible pipe couplings (including joint harness assemblies), transition couplings, segmented sleeve couplings, and flanged coupling adapters located indoors, in vaults and structures, and above ground with the same coating system as specified for the adjacent pipe. If the adjacent pipe is not coated, coat couplings per Section 099000, System No. 10. Apply prime coat at factory.

3. Line flexible pipe couplings and segmented sleeve couplings per Section 099000, System No. 7.

4. Alternatively, line and coat flexible pipe couplings and segmented sleeve couplings with fusion-bonded epoxy per Section 099761.

D. Hydrostatic Testing

Hydrostatically test flexible pipe couplings, expansion joints, segmented sleeve couplings, and expansion compensators in place with the pipe being tested. Test in accordance with Section 400515.

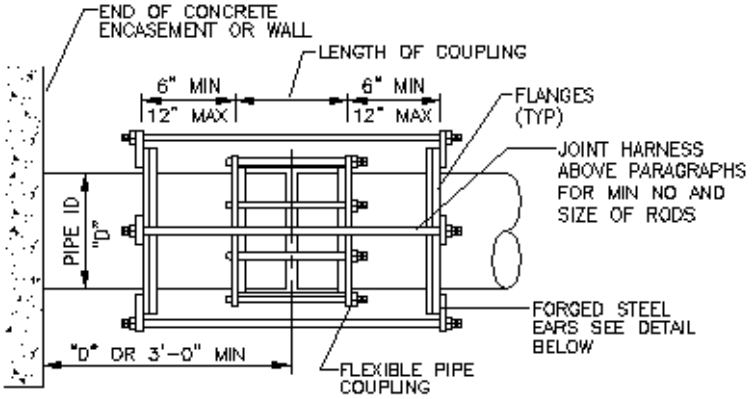


FLEXIBLE PIPE COUPLING

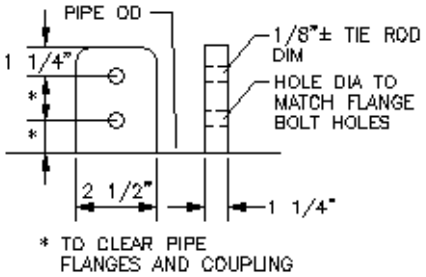


FORGED STEEL EAR – TYPE "A"

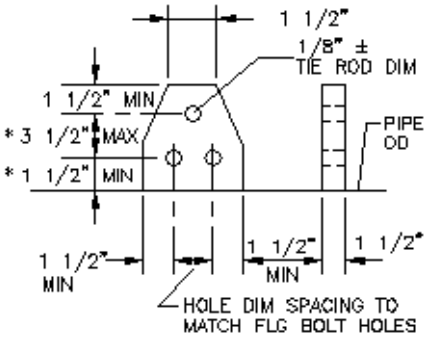


FORGED STEEL EAR – TYPE "B"

FLEXIBLE PIPE COUPLING TIE RODS – DUCTILE IRON PIPE DETAIL

SCALE: NONE

END OF SECTION