SAN BERNARDINO COUNTY FLOOD CONTROL DISTRICT

PLANS FOR CONSTRUCTION OF

CACTUS BASIN NO. 3 AND 3A

LOCATED IN THE CITY OF RIALTO OF THE COUNTY OF SAN BERNARDINO

LENGTH: 1,865 L.F. WORK ORDER NO.: F01666 SYSTEM NO.: 2 - 104 -

PROJECT LOCATION MAP

NOT TO SCALE

GENERAL NOTES:

1 SEE "SPECIAL PROVISIONS" FOR ADDITIONAL CONSTRUCTION INFORMATION & DETAILS.

2 IN GENERAL, ALL MATERIALS & CONSTRUCTION METHODS SHALL CONFORM TO THE 2002 EDITION STATE OF CALIFORNIA DEPARTMENT OF TRANSPORTATION "STANDARD SPECIFICATIONS" UNLESS OTHERWISE SPECIFIED.

3 THESE PLANS DEPICT ALL ACTIVE UTILITIES KNOWN BY THE DISTRICT TO EXIST AT THIS TIME. LOCATIONS ARE APPROXIMATE & SHALL BE CONFIRMED BY THE CONTRACTOR PRIOR TO ANY EXCAVATION. OPERATORS OF OVERHEAD UTILITIES SHALL BE NOTIFIED PRIOR TO START OF CONSTRUCTION.

4 THE CONTRACTOR SHALL CALL "UNDERGOUND SERVICE ALERT", 1-800-227-2600 AT LEAST 48 HOURS IN ADVANCE OF ANY WORK WITHIN THE PROJECT AREA TO ALLOW UTILITY OPERATORS TO CHECK & MARK LOCATIONS OF EXISTING FACILITIES.

5 THE CONTRACTOR(S) SHALL COORDINATE CONSTRUCTION WITH ALL UTILITIES AND OTHER IMPROVEMENTS INCLUDING, BUT NOT LIMITED TO GAS, TELEPHONE, ELECTRICAL, DOMESTIC WATER, STORM DRAINAGE, FLOOD CONTROL SYSTEMS, ETC.

6 CONTRACTOR SHALL PROTECT ALL UTILITIES, POLES, SIGNS, AND EXISTING IMPROVEMENTS IN PLACE UNLESS OTHERWISE DIRECTED BY THE ENGINEER OR AS NOTED ON THE PLANS.

7 NO CONCRETE SHALL BE PLACED UNTIL THE FORMS AND REINFORCING STEEL HAS BEEN PLACED, INSPECTED AND APPROVED BY THE FLOOD CONTROL DISTRICT AND DSOD ENGINEER.

8 THE WALLS AND FACES OF ALL EXCAVATIONS, GREATER THAN FIVE (5) FEET IN DEPTH SHALL BE EFFECTIVELY GUARDED BY A SHORING SYSTEM, SLOPING OF THE GROUND OR OTHER EQUIVALENT MEANS. TRENCHES LESS THAN FIVE (5) FEET IN DEPTH SHALL ALSO BE GUARDED WHEN EXAMINATION INDICATES HAZARDOUS GROUND MOVEMENT MAY BE EXPECTED.

9 NO STRUCTURE BACKFILL SHALL TAKE PLACE WITHOUT PRIOR APPROVAL OF THE FLOOD CONTROL DISTRICT AND DSOD ENGINEER.

10 ALL MATERIALS TESTING SHALL BE PROVIDED BY OTHERS IN ACCORDANCE WITH THE NUMBER, LOCATION, AND FREQUENCY REQUIRED BY THE FLOOD CONTROL DISTRICT, AND THE SPECIFICATIONS.

11 ALL EXCAVATION SHALL MEET THE REQUIREMENTS OF OSHA 29, CFR PART 1926, SUB-PART P, EXCAVATIONS.

12 ALL EXCAVATIONS OVER TWENTY (20) FEET IN DEPTH SHALL BE DESIGNED BY A REGISTERED PROFESSIONAL ENGINEER, (OSHA SUB-PART P, APPENDIX TABLE B-1).

13 RECORD DRAWINGS SHALL BE PROVIDED TO THE FLOOD CONTROL DISTRICT AND THE STATE OF CALIFORNIA DIVISION OF SAFETY OF DAMS (D.S.O.D.) BY THE CONTRACTOR.

ENGINEER'S NOTICE TO CONTRACTOR

THE EXISTENCE AND LOCATIONS OF ANY UNDERGROUND UTILITY PIPES OR STRUCTURES SHOWN ON THESE PLANS WERE OBTAINED BY A SEARCH OF AVAILABLE RECORDS. THESE LOCATIONS ARE APPROXIMATE AND SHALL BE CONFIRMED IN THE FIELD BY THE CONTRACTOR, SO THAT ANY NECESSARY ADJUSTMENT CAN BE MADE IN ALIGNMENT AND/OR GRADE OF THE PROPOSED IMPROVEMENT. THE CONTRACTOR IS REQUIRED TO TAKE DUE PRECAUTIONARY MEASURES TO PROTECT ANY UTILITY LINES SHOWN AND ANY OTHER LINES NOT OF RECORD OR NOT SHOWN ON THESE PLANS.

THE CONTRACTOR AGREES THAT HE/SHE SHALL ASSUME SOLE AND COMPLETE RESPONSIBILITY FOR JOB SITE CONDITIONS DURING THE COURSE OF CONSTRUCTION OF THIS PROJECT, INCLUDING SAFETY OF ALL PERSON AND PROPERTY: THAT REQUIREMENT SHALL APPLY CONTINUOUSLY AND NOT LIMITED TO NORMAL WORK HOURS; AND THAT THE CONTRACTOR SHALL DEFEND, INDEMNIFY, AND HOLD THE OWNER AND THE ENGINEERS HARMLESS FROM ANY AND ALL LIABILITY, REAL OR ALLEGED IN CONNECTION WITH THE PERFORMANCE OF WORK ON THIS PROJECT, EXCEPT FOR LIABILITY ARISING FROM THE SOLE NEGLIGENCE OF THE OWNER OR THE ENGINEER.

REFERENCES:

BASIS OF BEARING:

BASIS OF BEARING IS THE CENTERLINE OF CACTUS AVENUE BETWEEN HIGHLAND AVENUE AND MARIPOSA DR. PER CSFB 4049/652, JL# 8308 BEING N0°29'49"W-GRID

BENCH MARK:

FD SBCO F.C.D. BRASS CAP MON. ±530' N/O BASELINE AVE. AND ±660' W/O CACTUS AVE. PER CSFB 4049/654. ELEVATION = 1361.89'.

APPROVED BY: _____ _____

FLOOD CONTROL ENGINEER R.C.E. 41009 DATE

File No. 2-104- SHEET I-1

DRAWING NO. / DESCRIPTION

DRAWING NO.	DESCRIPTION
I-1	TITLE SHEET, LOCATION MAP
I-2	INDEX SHEET, LEGEND AND ABBREVIATIONS
I-3	CONSTRUCTION CALLOUTS, NOTES AND MATERIAL ZONES
I-4	SPILLWAY RATING CURVE & AREA-CAPACITY CURVE
I-5	REVEGETATION PLAN
G-1	GENERAL PLAN AND GRADING PLAN KEY MAP
G-2	SURVEY MAP-CACTUS BASIN NO. 3A AND HABITAT RESTORATION AREA
G-3	SURVEY MAP-SOUTH HALF OF BASIN NO. 3
G-4	SURVEY MAP-NORTH HALF OF BASIN NO. 3
G-5	SURVEY MAP-SPILLWAY AND 96" RCP BASIN OUTLET DRAIN
C-1	GENERAL GRADING PLAN & GEOTECHNICAL BORRING LOCATIONS
C-2	GRADING PLAN-BASIN NO. 3A AND HABITAT RESTORATION AREA
C-3	GRADING PLAN-SOUTH HALF OF BASIN NO. 3
C-4	GRADING PLAN-NORTH HALF OF BASIN NO. 3
C-5	GRADING PLAN-SPILLWAY AND 96" RCP BASIN OUTLET DRAIN
C-6	OUTLET SPILLWAY UNDERDRAIN PLAN, PROFILE & SECTIONS
C-7	OUTLET SPILLWAY UNDERDRAIN DETAILS & SECTIONS
C-8	PLAN, PROFILE & DETAILS-WEST EARTHEN SWALE
C-9	PLAN, PROFILE & DETAILS-EAST EARTHEN SWALE - STA.100+15.62 TO STA.108+00.00
C-10	PLAN, PROFILE & DETAILS-EAST EARTHEN SWALE - STA.108+00.00 TO STA.114+83.34
C-11	PLAN, PROFILE & DETAILS-CONCRETED SWALE
C-12	TYPICAL DAM & CIVIL SECTIONS
P-1	DAM CREST PROFILE-STA.82+48.99 TO STA. 94+00.00
P-2	DAM CREST PROFILE-STA. 94+00.00 TO STA.106+00.00
P-3	DAM CREST PROFILE-STA.106+00.00 TO STA.117+94.94
P-4	BASIN NO. 3A CREST PROFILE-STA. 93+37.11 TO STA.106+50.00
P-5	BASIN NO. 3A CREST PROFILE-STA.106+50.00 TO STA.119+59.16
X-1	DAM SECTIONS - STA. 82+65.98 AND STA. 83+00.00
X-2	DAM SECTIONS - STA. 83+38.54 AND STA. 83+74.04
X-3	DAM SECTIONS - STA. 84+00.00 AND STA. 85+00.00
X-4	DAM SECTIONS - STA. 86+00.00 AND STA. 87+00.00
X-5	DAM SECTIONS - STA. 88+00.00 AND STA. 89+00.00
X-6	DAM SECTIONS - STA. 90+00.00 AND STA. 90+24.04
X-7	DAM SECTIONS - STA. 91+00.00 AND STA. 92+00.00
X-8	DAM SECTIONS - STA. 93+00.00 AND STA. 93+87.93
X-9	DAM SECTIONS - STA. 94+04.93 AND STA. 95+00.00
X-10	DAM SECTIONS - STA. 96+00.00 AND STA. 97+30.83
X-11	DAM SECTIONS - STA. 99+00.00 AND STA. 100+00.00
X-12	DAM SECTIONS - STA. 100+00.00 AND STA. 101+25.00
X-13	DAM SECTIONS - STA. 102+95.25 AND STA. 105+00.00
X-14	DAM SECTIONS - STA. 106+00.00 AND STA. 107+00.00
X-15	DAM SECTIONS - STA. 108+00.00 AND STA. 109+00.00
X-16	DAM SECTIONS - STA. 110+00.00 AND STA. 111+00.00
X-17	DAM SECTIONS - STA. 112+00.00 AND STA. 113+00.00
X-18	DAM SECTIONS - STA. 114+00.00 AND STA. 114+83.34
X-19	DAM SECTIONS - STA. 115+00.00 AND STA. 116+00.00
X-20	DAM SECTIONS - STA. 117+00.00 AND STA. 117+40.94
X-21	BASIN NO. 3A SECTIONS - STA. 93+37.11 AND STA. 94+00.00
X-22	BASIN NO. 3A SECTIONS - STA. 95+00.00 AND STA. 96+00.00
X-23	BASIN NO. 3A SECTIONS - STA. 97+31.42 AND STA. 99+00.00
X-24	BASIN NO. 3A SECTIONS - STA. 99+00.00 AND STA. 100+00.00
X-25	BASIN NO. 3A SECTIONS - STA. 101+25.00 AND STA. 102+00.00
X-26	BASIN NO. 3A SECTIONS - STA. 103+00.00 AND STA. 104+00.00
X-27	BASIN NO. 3A SECTIONS - STA. 105+00.00 AND STA. 106+00.00
X-28	BASIN NO. 3A SECTIONS - STA. 106+09.04 AND STA. 107+00.00
X-29	BASIN NO. 3A SECTIONS - STA. 108+00.00 AND STA. 109+00.00
X-30	BASIN NO. 3A SECTIONS - STA. 110+00.00 AND STA. 111+00.00
X-31	BASIN NO. 3A SECTIONS - STA. 112+00.00 AND STA. 113+00.00
X-32	BASIN NO. 3A SECTIONS - STA. 114+00.00 AND STA. 115+00.00
X-33	BASIN NO. 3A SECTIONS - STA. 116+00.00 AND STA. 117+00.00
X-34	BASIN NO. 3A SECTIONS - STA. 118+00.00 AND STA. 119+59.16
S-1	TYPICAL STRUCTURAL NOTES & DETAILS
S-2	96" RCP OUTLET BASIN DRAIN PROFILE STA. 9+01.80 TO STA. 10+98.00
S-3	96" RCP OUTLET BASIN DRAIN STRUCTURAL DETAILS
S-4	96" RCP OUTLET BASIN DRAIN ENCASEMENT & DETAILS
S-5	OUTLET SPILLWAY STRUCTURAL SECTIONS & DETAILS
S-6	TYPICAL SPILLWAY INVERT & WALLS, SECTIONS & DETAILS
S-7	SPILLWAY ACCESS LADDER DETAILS
S-8	HEADWALL AND WINGWALL STRUCTURAL DETAILS - CALTRANS STD. D90A
S-9	HEADWALL AND WINGWALL STRUCTURAL DETAILS - CALTRANS STD. D90B
S-10	SLOPED PROTECTION BARRIER - APWA STD. PLAN NO. 360
S-11	PIPE HEADWALL - CALTRANS STD. D89
S-12	DRAINAGE INLETS - CALTRANS STD. D73
S-13	CONCRETE COLLAR - APWA STD. SP 380-3 & HEADWALL WING TYPE - S.B.C. STD. 209
SD-1	36" RCP INLET TO HABITAT RESTORATION AREA
SD-2	24" RCP INLET TO BASIN NO. 3
SD-3	30" RCP INLET TO BASIN NO. 3
SD-4	54" RCP INLET TO BASIN NO. 3
SD-5	54" RCP INLET ENCASEMENT SECTIONS AND DETAILS
SD-6	2-120" RCPs INLETS PLANS, PROFILE AND DETAILS
SD-7	2-120" RCPs ENCASEMENT SECTIONS AND DETAILS
B-1	CACTUS BASIN NO. 3 BORROW PIT
FCD-1	FENCE DRAWING-SPECIAL DRAWING. I
FCD-2	FENCE DRAWING-SPECIAL DRAWING. II

LEGEND OF MAP SYMBOLS FOR GRADING PLANS

- CENTERLINE BERM/ROADWAY/OTHER
- CHAIN LINK FENCE (PER SHT. FCD-2)
- CONSTRUCTION LIMITS
- DAM AXIS
- DIRT ROAD
- EXISTING GROUND
- FLOWLINE
- INTERCEPTOR DITCH PER
- MATCH LINE
- PAVED ROAD
- POWER POLE
- PRINCIPAL SURVEY CONTROL POINT
- R/W OR EASMENT LINE
- REMOVE EXISTING FENCING
- TOE OF SLOPE, TOP OF SLOPE, LIMIT OF GRADING
- TREE OR BUSH
- TYPE "C" AC BERM OR DOWNDRAIN
- UNPAVED ROAD
- PROPOSED MAJOR CONTOUR LINES
- PROPOSED MINOR CONTOUR LINES
- PROPOSED RIPRAP
- PROPOSED CONCRETE
- COMPACTED SOIL
- GROUTED STONE

STANDARD PLANS (SPECIAL PROVISIONS, APPENDIX A)

DRAWING NO.	DESCRIPTION
APWA	
SP 360-0	SLOPE PROTECTION BARRIER
SP 380-3	CONCRETE COLLAR
SP 635-2	STEEL STEP
CALTRANS	
D90A	PIPE CULVERT HEADWALLS, ENDWALLS & WINGWALLS
D90B	PIPE CULVERT HEADWALLS, ENDWALLS & WINGWALLS
A62D	EXCAVATION AND BACKFILL-CONCRETE PIPE CULVERTS
D73	DRAINAGE INLET DETAILS
D89	PIPE 'L' HEADWALL
SAN BERNARDINO COUNTY	
STD. 128	20' CONCRETE DRIVEWAY
STD. 209	HEADWALL WING-TYPE
RIVERSIDE COUNTY	
M816(MODIFIED)	CONCRETE BULKHEAD

SPECIAL PLANS (SPECIAL PROVISIONS, APPENDIX B)

1. SPEC. DWG. I "SPECIAL BASIN GRADING REQUIREMENTS"
2. SPEC. DWG. VI "LIMITS OF PAYMENT FOR EXCAVATION AND BACKFILL"
3. "PROJECT SIGN"

ABBREVIATIONS

ABC	AGGREGATE BASE COURSE
AC	ASPHALT CONCRETE
APPROX	APPROXIMATE
AVE	AVENUE
BC	BEGIN CURVE
BHH	BECKER HAMMER TEST HOLE
BVC	BEGIN VERTICAL CURVE
CDF	CONTROL DENSITY FILL
CMP	CORREGATED METAL PIPE
CHAN	CHANNEL
CONC	CONCRETE
C	CENTERLINE
CJ	CONSTRUCTION JOINT
CL	CONTROL LINE
DDG (20')	DOUBLE DRIVE GATE (20' CLEAR OPENING)
DIA	DIAMETER
DS	DOWNSTREAM
E	EAST, EASTING
EC	END CURVE
EL, ELEV	ELEVATION
E'LY	EASTERLY
EVC	END VERTICAL CURVE
EW	EAST WALL
EX, EXIST	EXISTING
FES	FLARED END SECTION
FB	FREEBOARD
FG	FINISH GRADE
FL	FLOW LINE
GA	GAUGE
GR	GRADE
GB	GRADE BREAK
H	HEIGHT
HP	HIGH POINT
HT	HEIGHT
IE	INVERT ELEVATION
INV	INVERT
L	LENGTH
LAT	LATERAL
LOL	LAYOUT LINE
LONG	LONGITUDINAL
LP	LOW POINT
LT	LEFT OF (OFFSET FROM BASE LINE)
MAX	MAXIMUM
MIN	MINIMUM
N	NORTH, NORTHING
NE	NORTHEAST
NW	NORTHWEST
OC	ON CENTER
OG	ORIGINAL GRADE
PPVC	PERFORATED PVC PIPE
PROP	PROPOSED
PIP	PROTECT IN PLACE
R	RADIUS
RC	REINFORCED CONCRETE
RCP	REINFORCED CONCRETE PIPE
RT	RIGHT OF (OFFSET FROM BASE LINE)
ROW, R/W	RIGHT OF WAY
RSP	ROCK SLOPE PROTECTION
S	SLOPE
SE	SOUTHEAST
SH	SHEET
SBCFCD	SAN BERNARDINO COUNTY FLOOD CONTROL DISTRICT
SPEC	SPECIFICATION
SIM	SIMILAR
SL	STATION LINE
SP	STANDARD PLAN (CALTRANS, 1992)
SRMP	SPIRAL RIB METAL PIPE
STA	STATION
SW	SOUTHWEST
T	TANGENT
TCE	TEMPORARY CONSTRUCTION EASEMENT
TP	TEST PIT
TRANS	TRANSITION
TW	TOP OF WALL
TYP	TYPICAL
UNO	UNLESS NOTED OTHERWISE
US	UPSTREAM
VAR	VARIES
VPI	VERTICAL POINT OF INTERSECTION
W	WIDTH, WEST
W/	WITH
W'LY	WESTERLY
WS	WATER SURFACE
WTG	WALK THROUGH GATE
WW	WEST WALL
YR	YEAR

REGISTERED PROFESSIONAL ENGINEER JAMES PATRICK BORCUK No. 41807 Exp. 3/31/08 CIVIL STATE OF CALIFORNIA

SAN BERNARDINO COUNTY FLOOD CONTROL DISTRICT 1939 CALIFORNIA

REVISIONS			
MARK	DATE	DESCRIPTION	BY:

SUBMITTED BY:

CHIEF, ENGINEERING DIVISION — DATE

RECOMMENDED BY:

ASSIST. FLOOD CONTROL ENGINEER — DATE

APPROVED BY:

FLOOD CONTROL ENGINEER — DATE

PROJ. ENGR.	DES. BY:	REV'D BY:	DRAWN BY:
T.B.	S.F.B./D.J.N.	J.B.	S.F.B./D.J.N.

SAN BERNARDINO COUNTY FLOOD CONTROL DISTRICT

FONTANA-RIALTO DRAINAGE SYSTEM

CACTUS BASIN NO. 3

INDEX SHEET, LEGEND AND ABBREVIATIONS

DATE JULY. , 2007

SCALE AS SHOWN

FILE NO. 2-104-

SHEET NO. I-2

GENERAL NOTES AND CONSTRUCTION CALLOUTS AND NOTES

GENERAL NOTES–DAM TERMINOLOGY:

1. ALL COORDINATES AND BEARINGS SHOWN ARE BASED ON NAD 83, CALIFORNIA COORDINATE SYSTEM (CCS) ZONE 5, AERIAL GRID COORDINATES, WHERE SHOWN, ARE FOR REFERENCE ONLY.
2. ALL DISTANCES SHOWN ON THESE DRAWINGS ARE GRID DISTANCES. TO OBTAIN GROUND DISTANCES, MULTIPLY BY 1.000082541
3. FOR SPILLWAY GRADING, SEE SHEET C–5
4. TOP OF ALL LEVEES ARE FLAT, EXCEPT SOUTH EMBANKMENT OF BASIN NO. 3 IS SLOPING 2% TOWARD THE BASIN NO. 3A AREA, SEE GRADING PLANS
5. FOR CLARITY, BOUNDARY FENCING IS SHOWN ON PLANS OFF CENTER (NOT TO SCALE). LOCATE PER ENGINEER'S DIRECTION.
6. DIMENSIONED WIDTHS SHOWN FOR ACCESS RAMPS ARE FROM BOTH EDGES OF RAMP. THEY DO NOT ACCOUNT FOR THE V–DITCH OUTSIDE THE ACCESS RAMP SECTION.
7. FOR LEGEND OF MAP SYMBOLS, GENERAL GRADING NOTES, STATIONING NOTES, AND CONSTRUCTION CALLOUTS, SEE SHEETS I–2, I–3

DAM CREST = TOP OF THE BASIN NO. 3

℄ DAM EMBANKMENT = CENTERLINE OF DAM CREST

℄ BASIN NO. 3A = CENTERLINE OF BASIN NO. 3A AND HABITAT RESTORATION AREA EMBANKMENT

SPILLWAY AXIS = CENTERLINE OF SPILLWAY

96" RCP AXIS = CENTERLINE OF 96" RCP BASIN OUTLET DRAIN

℄ 24" RCP AXIS = CENTERLINE OF 24" RCP BASIN NO. 3 INLET

℄ 30" RCP AXIS = CENTERLINE OF 30" RCP BASIN NO. 3 INLET

℄ 54" RCP AXIS = CENTERLINE OF 54" RCP BASIN NO. 3 INLET

℄ 36" RCP AXIS = CENTERLINE OF 36" RCP BASIN NO. 3A INLET

WEST SWALE AXIS = CENTERLINE OF WEST EARTHEN SWALE

EAST SWALE AXIS = CENTERLINE OF EAST EARTHEN SWALE

SE SWALE AXIS = CENTERLINE OF SOUTHEAST CONCRETE SWALE

RCB = BASELINE REINFORCED CONCRETE BOX

CACTUS CHANNEL = INLET CHANNEL FROM NORTH END OF CACTUS BASIN NO. 3 AND ADJACENT TO BASIN NOS. 4 & 5

ACCESS ROADS = ROADWAYS LINKING THE DAM CREST TO EXISTING ACCESS ROADS.

RAMPS = ROADWAYS THAT RAMP DOWN FROM THE DAM CREST TO THE BOTTOM OF THE CACTUS BASIN NO. 3, CACTUS BASIN NO. 3A, AND HABITAT RESTORATION AREA

DAM, CHANNEL, AND ROADWAY STATIONING:

℄ DAM EMBANKMENT: STA. 100+00 AT SPILLWAY AXIS, INCREASING FROM THE NW CORNER OF THE DAM TO THE NE CORNER OF THE DAM.

℄ BASIN NO. 3A: STA. 100+00 AT SPILLWAY AXIS, INCREASING FROM THE SW CORNER OF THE BASIN NO. 3A, AROUND THE HABITAT RESTORATION AREA, TO THE SW CORNER OF BASIN 3A

SPILLWAY AXIS: STA. 10+00 AT THE ℄ DAM EMBANKMENT/ ℄ BASIN NO. 3A, DECREASING DOWNSTREAM.

96" RCP AXIS: STA. 10+00 AT THE ℄ DAM EMBANKMENT/ ℄ BASIN NO. 3A, DECREASING DOWNSTREAM.

℄ 120" RCP LINE 'A': STA. 10+00 AT THE ℄ DAM EMBANKMENT, DECREASING DOWNSTREAM.

℄ 120" RCP LINE 'B': STA. 10+00 AT THE ℄ DAM EMBANKMENT, DECREASING DOWNSTREAM.

℄ 24" RCP AXIS: STA. 10+00 AT THE ℄ DAM EMBANKMENT, DECREASING DOWNSTREAM.

℄ 30" RCP AXIS: STA. 10+00 AT THE ℄ DAM EMBANKMENT, DECREASING DOWNSTREAM.

℄ 54" RCP AXIS: STA. 10+00 AT THE ℄ DAM EMBANKMENT, DECREASING DOWNSTREAM.

℄ 36" RCP AXIS: STA. 10+00 AT THE ℄ DAM EMBANKMENT, DECREASING DOWNSTREAM.

EASTERLY AND WESTERLY SPILLWAY/OUTFALL CHUT WALLS: STA. 10+00 AT THE ℄ DAM EMBANKMENT, DECREASING DOWNSTREAM.

ALL ACCESS RAMPS: STA. 10+00 AT ℄ DAM EMBANKMENT, INCREASING TOWARD THE BASIN FLOOR.

CONSTRUCTION CALLOUTS:

[1] INTERCEPTOR V–DITCH PER (STD)
[2] 3" AC PVMT ROAD SECTION PER (STD)
[3] 10' WIDE CONCRETE SWALE PER (STD)
[4] GRAVEL PAD PER (STD)
[5] CONCRETED SPLASH PAD PER (STD)
[6] CONCRETE COLLAR PER APWA SP 380–3
[7] BOUNDARY FENCE PER SHT FCD–I
[8] CHANNEL FENCE PER SHT FCD–II
[9] DOUBLE DRIVE GATE PER SHT FCD–I
[10] WALK GATE PER SHT FCD–II
[11] SPILLWAY ACCESS LADDER PER SHT S–7
[12] HEADWALL WING–TYPE PER SBC STD. DRWG. 209
[13]
[14] DRAINAGE INLET TYPE G2 FOR 54" RCP PER CALTRANS SP D73
[15] DRAINAGE INLET TYPE G2 FOR 30" RCP PER CALTRANS SP D73
[16] SLOPED PROTECTION BARRIER PER APWA SP 360–0 (STD)
[17] 6' WIDE WEST EARTHEN SWALE PER (STD)
[18] 4' WIDE EAST EARTHEN SWALE PER (STD)
[19] CONCRETE BULKHEAD PER RIVERSIDE COUNTY M816(MODIFIED)
[20] WATERMAN® FLAP GATES
[21] 36" RCP 'L' HEADWALL PER CALTRANS SP D89

CONSTRUCTION NOTES:

(1) CONSTRUCT SOUTH EMBANKMENT FOR BASIN NO. 3 PER PLAN ON SHEETS C–2 & C3 , PROFILE ON SHEETS P–2 & P–4, SECTIONS ON SHEETS X–11 TO X–13 & X–23 TO X–25 AND SURVEY CONTROL DATA ON SHEETS G–2 & G–3

(2) CONSTRUCT EAST AND WEST EMBANKMENTS FOR SOUTH HALF OF BASIN NO. 3 PER PLAN ON SHEET C–3, PROFILE ON SHEETS P–1 TO P–3, SECTIONS ON SHEETS X–5 TO X–10 & X–13 TO X–16 AND SURVEY CONTROL DATA ON SHEET G–3

(3) CONSTRUCT EAST AND WEST EMBANKMENTS FOR NORTH HALF OF BASIN NO. 3 PER PLAN ON SHEET C–4 , PROFILE ON SHEETS P–1 & P–3, SECTIONS ON SHEETS X–1 TO X–5 & X–16 TO X–20, AND SURVEY CONTROL DATA ON SHEET G–4

(4) CONSTRUCT SOUTH EMBANKMENT FOR BASIN NO. 3A SOUTH OF BASIN NO. 3 PER PLAN ON SHEET C–2, PROFILE ON SHEET P–5, SECTIONS ON SHEETS X–29 TO X–34, AND SURVEY CONTROL DATA ON SHEET G–2.

(5) CONSTRUCT EAST AND WEST EMBANKMENTS FOR BASIN NO. 3A AND HABITAT RESTORATION AREA, SOUTH OF BASIN NO. 3 PER PLAN ON SHEET C–2, PROFILE ON SHEETS P–4 & P–5, SECTIONS ON SHEETS X–21 TO X–23 & X–26 TO X–30 AND SURVEY CONTROL DATA ON SHEET G–2.

(6) CONSTRUCT HABITAT RESTORATION AREA SOUTH EAST OF CACTUS BASIN NO. 3 PER PLAN ON SHEET C–2, PROFILE ON SHEETS P–4 & P–5, SECTIONS ON SHEET X–25 TO X–32, AND SURVEY CONTROL DATA ON SHEET G–2.

(7) CONSTRUCT EAST MAINTENANCE ACCESS RAMP FOR BASIN NO. 3 PER PLAN ON SHEETS C3 & C4, PROFILE ON SHEET P–3, TYPICAL SECTION ON SHEET C–3, AND SURVEY CONTROL DATA ON SHEETS G–3 & G–4.

(8) CONSTRUCT WEST MAINTENANCE ACCESS RAMP FOR BASIN NO. 3 PER PLAN ON SHEETS C3 & C–4, PROFILE ON SHEET P–1, TYPICAL SECTION ON SHEET C–4, AND SURVEY CONTROL DATA ON SHEETS G–3 & G–4.

(9) CONSTRUCT WEST MAINTENANCE ACCESS RAMP FOR BASIN NO. 3A PER PLAN ON SHEET C–2, PROFILE ON SHEET P–4, TYPICAL SECTION ON SHEET C–2, AND SURVEY CONTROL DATA ON SHEET G–2.

(10) CONSTRUCT SOUTH MAINTENANCE ACCESS RAMP FOR HABITAT RESTORATION AREA PER PLAN ON SHEET C–2, PROFILE ON SHEET P–5, TYPICAL SECTION ON SHEET C–2, AND SURVEY CONTROL DATA ON SHEET G–2.

(11) CONSTRUCT REINFORCED CONCRETE SPILLWAY PER PLAN ON SHEETS C–2, C–3, C–5 & C–6, PROFILE ON SHEETS C–5, DETAILS ON SHEETS C–6, C–7 & S–5, AND SURVEY CONTROL DATA ON SHEETS G–2, G–3 & G–5.

(12) CONSTRUCT APPROX. 197 LINEAR FEET OF 96" RCP OUTLET BASIN DRAIN PER PLAN C–2, C–3, C–5 & S–5, PROFILE ON SHEET S–2 AND DETAILS ON SHEETS S–2 & S–3 (D–LOAD PER PROFILE)

(13) CONSTRUCT 96" RCP ENCASEMENT PER DETAIL ON SHEET S–4

(14) CONSTRUCT HEADWALL AND WINGWALLS FOR 96" RCP OUTLET PER PLAN ON SHEETS C–2, C–3, C–5 & S–2, PROFILE ON SHEET S–2, DETAILS ON SHEETS S–2 & S–3 AND STRUCTURAL DETAILS ON SHEETS S–8 & S–9 PER CALTRANS STD. DETAIL D90A

(15) CONSTRUCT WEST AND EAST ACCESS ROAD PER PLAN, TYPICAL SECTIONS ON SHEETS C–2 TO C–4, AND SURVEY CONTROL DATA ON SHEETS G–2 TO G–4.

(16) CONSTRUCT APPROX. 76 LINEAR FEET OF 36" RCP PER PLAN AND DETAILS ON SHEET SD–1 (D–LOAD PER PROFILE)

(17) CONSTRUCT APPROX. 146 LINEAR FEET OF 54" RCP INLET PER PLAN AND DETAILS ON SHEETS SD4 & SD5 (D–LOAD PER PROFILE)

(18) REMOVE AND REPLACE ROCK SLOPE PROTECTION AFTER FINISH GRADING 2.0' THICK RSP, CLASS 'LIGHT' USING METHOD "A" PLACEMENT TO ELEVATION = 1348'

(19) REMOVE AND REPLACE ROCK PROTECTION AFTER FINISH GRADING CHECK DAM IN BASIN NO. 3A

(20) PROTECT IN PLACE EXISTING RCB OUTLET STRUCTURE IN BASIN NO. 3A

(21) PROTECT IN PLACE EXISTING HEADWALL AND WINGWALL FOR RCB

(22) PROTECT IN PLACE EXISTING BOUNDARY CHAIN LINK FENCE

(23) REMOVE AND DISPOSE OF EXISTING CHAIN LINK FENCE CROSSING CACTUS BASIN NO. 3

(24) PROTECT IN PLACE THE EXISTING TREE(S) IN THE HABITAT RESTORATION AREA

(25) PROTECT IN PLACE THE EXISTING STAFF GAUGE IN THE HABITAT RESTORATION AREA

(26) PROTECT IN PLACE EXISTING 36" CMP

(27) REMOVE AND DISPOSE EXISTING 36" CMP

(28) CONSTRUCT ROCK CUT–OFF WALLS AROUND THE OUTSIDE PERIMETER OF ROCK RIP RAP AREAS AS FOLLOWS:
THE OUTSIDE PERIMETER OF 1/2 TON UNGROUTED ROCK RIP RAP AREAS SHALL BE 5' DEEP AND 5' WIDE
THE OUTSIDE PERIMETER OF 1/4 TON GROUTED ROCK RIP RAP SHALL BE 5' DEEP AND 3' WIDE
THE OUTSIDE PERIMETER OF GROUTED FACING ROCK SHALL BE 3' WIDE AND 3' DEEP

(29) CONSTRUCT CONCRETE CUT–OFF WALLS PER PLAN ON SHEETS C–2, C–3, C–5 & C–6 AND DETAILS ON SHEET S–3 & S–6

(30) CONSTRUCT SPILLWAY SUBDRAIN SYSTEM PER PLAN ON SHEET C–6, SECTIONS & DETAILS ON SHEETS C–6 & C–7.

(31) REMOVE EXISTING BOUNDARY FENCE AND GATES FROM BASELINE RD. AT APPROX. STA 114+00 ± TO EAST END AND REPLACE FENCE PER FCD–I TO STA 113+06.81 TO STA 114+00 ±

(32) MOVE BOUNDARY FENCE FROM STA 113+06.81 TO THE EAST 25'± TO THE SOUTH PER FCD–I

(33) REMOVE EXISTING 20' DOUBLE DRIVE GATE AND RE–INSTALL 20' DOUBLE DRIVE GATE AT STA 113+94± TO STA 112+86.81 AND AT LOCATION SHOWN HEREON AND PER DETAIL SHOWN ON FCD–I

(34) CONSTRUCT 20' CONCRETE DRIVEWAY PER SAN BERNARDINO COUNTY STD. 128

(35) PROTECT IN PLACE EXISTING BLOCK WALL

(36) REMOVE AND DISPOSE EXISTING DOUBLE DRIVE GATE

(37) REMOVE AND RE–INSTALL BOUNDARY FENCE AFTER EXCAVATION PER SHEET FCD I

(38) BREAK AND REPLACE EXISTING 24" RCP PER PLAN, PROFILE ON SHEET SD–2, SECTION ON SHEET SD–2 AND SURVEY CONTROL DATA ON SHEET G–4.

(39) BREAK AND REPLACE EXISTING 30" RCP PER PLAN, PROFILE ON SHEETS SD–3, SECTION ON SHEET SD–3 AND SURVEY CONTROL DATA ON SHEET G–3.

(40) CONSTRUCT APPROX. 159 LINEAR FEET OF 2 –120" RCP BASIN INLET PER PLAN, PROFILE ON SHEETS SD–6 & SD–7 AND DETAILS ON SHEETS SD–6 & SD–7 (D–LOAD PER PROFILE)

(41) CONSTRUCT 2 –120"" RCP ENCASEMENT PER DETAIL ON SHEET SD–7

(42) CONSTRUCT HEADWALL AND WINGWALLS FOR 2 –120" RCP OUTLET PER PLAN, PROFILE ON SHEET SD–6 & SD–7, DETAILS ON SHEET SD–6 & SD–7 AND STRUCTURAL DETAILS ON SHEETS S–8 & S–9 PER CALTRANS STD. DETAIL D90A

(43) CONSTRUCT 10" THICK REINFORCED CONCRETE FLOATER SLAB PER PLAN AND DETAILS ON SHEET S–3

(44) BREAK EXISTING 66" SRMP AT NORTH EMBANKMENT OF BASIN NO. 3 TO INLET TO BASIN NO. 4

(45) HYDROSEED CUT AND FILL SLOPE WITH NATIVE VEGETATION PER SPECS

(46) SAWCUT AND CONNECT EXISTING 24" RCP TO DRAINAGE INLET PER PLAN, PROFILE ON SHEET SD–4, PER APWA SP 308–1, CORNER CONNECTION.

(47) ESTABLISH SURVEY MONUMENT ALONG SPILLWAY EMBANKMENT AT STA.100+00.00 ℄ DAM EMBANKMENT/STA. 10+00.00 ℄ SPILLWAY PER PLAN ON SHEET C5.

(48) ESTABLISH SURVEY MONUMENT ALONG SPILLWAY EMBANKMENT AT STA. 99+00.00 ℄ DAM EMBANKMENT PER PLAN ON SHEET C5.

(49) ESTABLISH SURVEY MONUMENT ALONG SPILLWAY EMBANKMENT AT STA.101+00.00 ℄ DAM EMBANKMENT PER PLAN ON SHEET C5.

MATERIAL ZONES:

ZONE (1) MIXED, BORROW FROM BASIN EXCAVATION, 93% RELATIVE COMPACTION

SIZE	PERCENT PASSING
2.0"	100
1.5"	73 – 100
1.0"	65 – 92
# 4	37 – 64
#10	25 – 52
#20	15 – 37
#40	9 – 25
#200	≥ 8

ZONE (2) CLASS 2 AGGREGATE BASE, 6" DEEP

ZONE (3) 3" AC PAVEMENT (ON 6" OF ZONE 2, 95% RELATIVE COMPACTION)

ZONE (4) CONCRETED ROCK SLOPE PROTECTION (RSP). 1/4 TON, METHOD 'A' PLACEMENT

ZONE (5) CONCRETED ROCK SPLASH PAD, FACING CLASS, METHOD 'A' PLACEMENT

ZONE (6) 1/4 TON GROUTED ROCK RIP–RAP, THICKNESS = 3' MIN., DEPTH OF GROUT PENETRATION =1.25', METHOD 'A' PLACEMENT

ZONE (7) 1/2 TON UNGROUTED ROCK RIP–RAP, THICKNESS = 3.5' MIN., METHOD 'A' PLACEMENT

ZONE (8) CONCRETED FACING ROCK, THICKNESS = 1.5' MIN., DEPTH OF GROUT PENETRATION =.75', METHOD 'A' PLACEMENT

ZONE (9) GRAVEL PAD ON BASIN FLOOR ADJACENT TO RAMPS PER (STD)

ZONE (10) 1/2 TON CONCRETE RIPRAP (T=4.0') WITH UPPER 6" TO 9" OF TOP LAYER EXPOSED, TYPE 'B' PLACEMENT WITH 1.25' THICK ROCK BACKING NO. 2 AND TYPE 'A' ROCK SLOPE PROTECTION FABRIC PER CALTRANS STD. SPEC. SECTION 72

REGISTERED PROFESSIONAL ENGINEER JAMES PATRICK BORCHUK No. 41807 Exp. 3/31/08 CIVIL STATE OF CALIFORNIA

SAN BERNARDINO COUNTY FLOOD CONTROL DISTRICT 1939 CALIFORNIA

REVISIONS			
MARK	DATE	DESCRIPTION	BY:

SUBMITTED BY:
CHIEF, ENGINEERING DIVISION DATE

RECOMMENDED BY:
ASSIST. FLOOD CONTROL ENGINEER DATE

APPROVED BY:
FLOOD CONTROL ENGINEER DATE

PROJ. ENGR.	DES. BY:	REV'D BY:	DRAWN BY:
T.R.	S.F.B./D.J.N.	J.B.	S.F.B./D.J.N.

SAN BERNARDINO COUNTY FLOOD CONTROL DISTRICT

FONTANA–RIALTO DRAINAGE SYSTEM

CACTUS BASIN NO. 3

CONSTRUCTION CALLOUTS, NOTES AND MATERIAL ZONES

DATE DEC. , 2007
SCALE AS SHOWN
FILE NO. 2–104–
SHEET NO. I–3

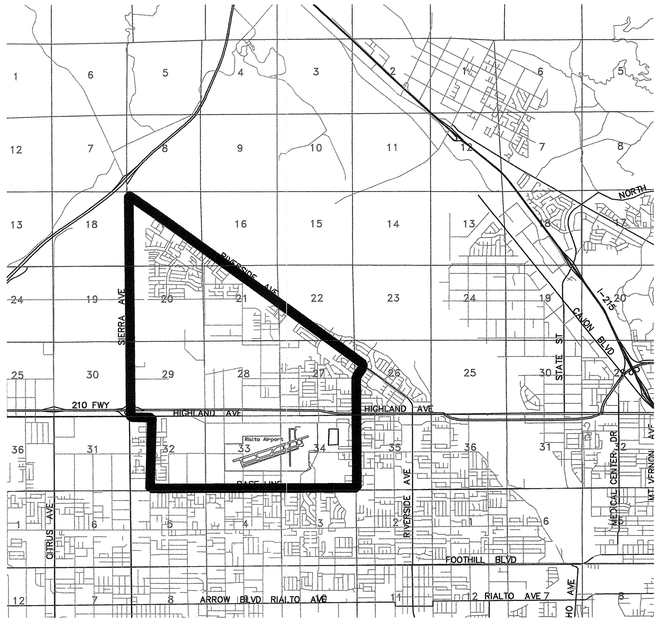

LOCATION MAP

AREA-CAPACITY

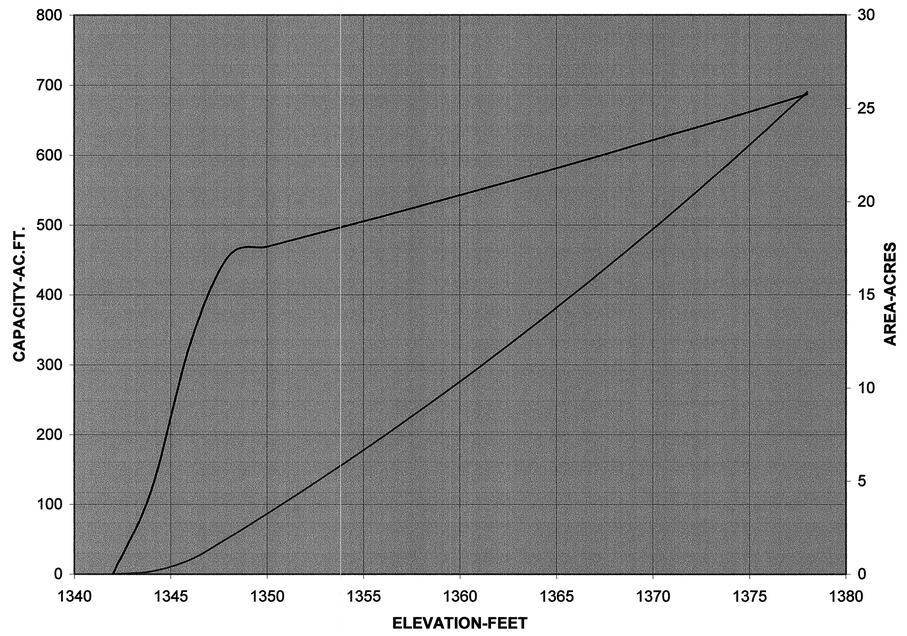

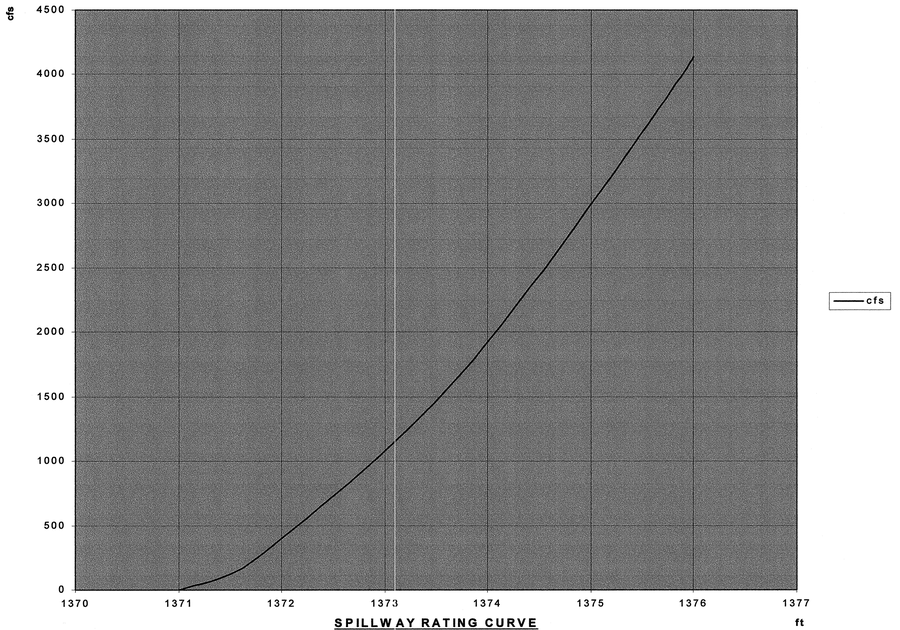

REGISTERED PROFESSIONAL ENGINEER
JAMES PATRICK BOSCUR
No. 41807
Exp. 3/31/08
CIVIL
STATE OF CALIFORNIA

SAN BERNARDINO COUNTY FLOOD CONTROL DISTRICT
1939
CALIFORNIA

REVISIONS			
MARK	DATE	DESCRIPTION	BY:

SUBMITTED BY:
CHIEF, ENGINEERING DIVISION DATE

RECOMMENDED BY:
ASSIST. FLOOD CONTROL ENGINEER DATE

APPROVED BY:
FLOOD CONTROL ENGINEER DATE

PROJ. ENGR.	DES. BY:	REV'D BY:	DRAWN BY:
T.R.	S.F.B./D.J.N.	J.B.	S.F.B./D.J.N.

SAN BERNARDINO COUNTY FLOOD CONTROL DISTRICT

FONTANA–RIALTO DRAINAGE SYSTEM

CACTUS BASIN NO. 3

SPILLWAY RATING CURVE & AREA–CAPACITY CURVE

DATE	SCALE	FILE NO.	SHEET NO.
DEC. , 2007	AS SHOWN	2-104-	I-4

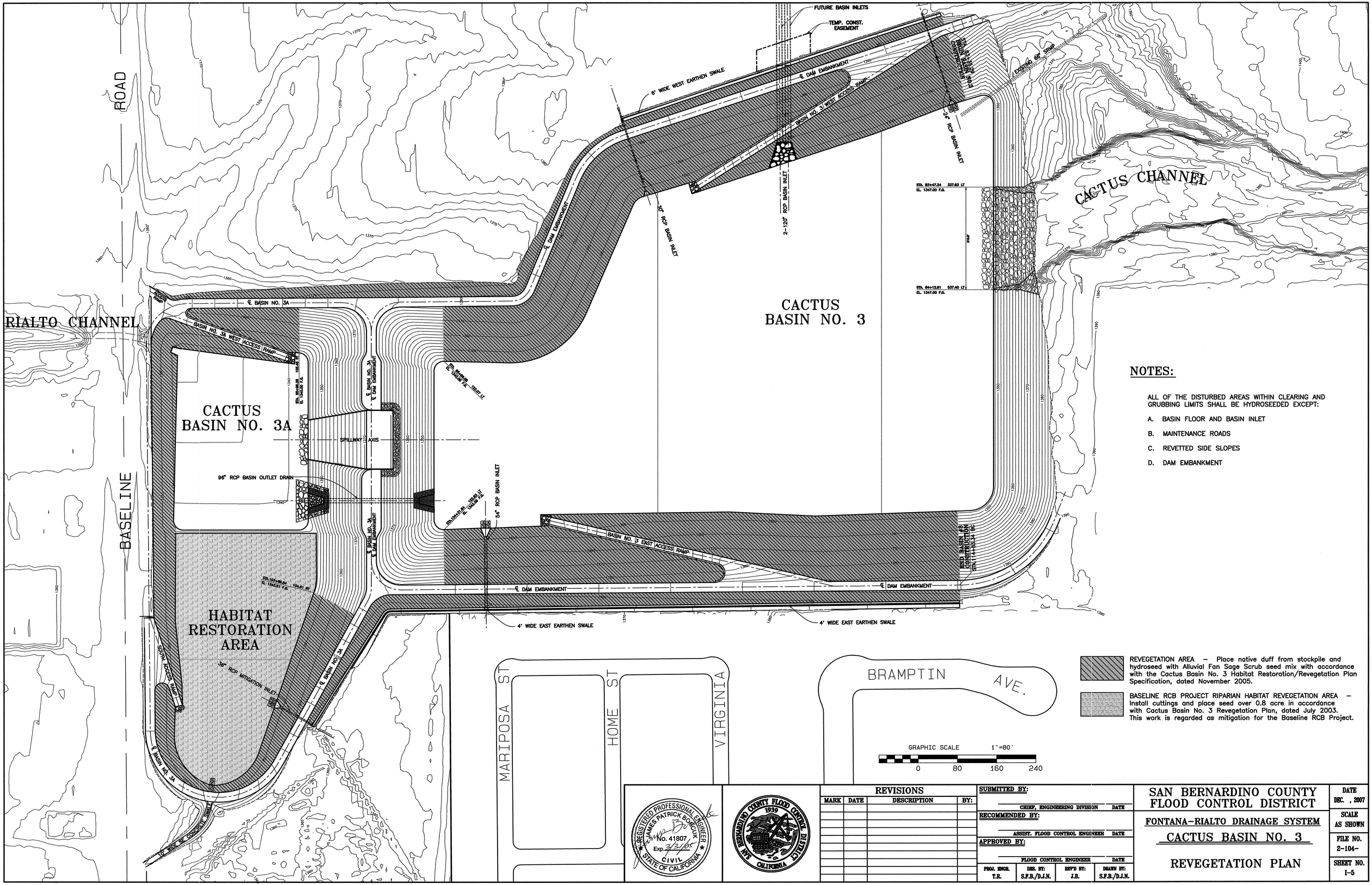

NOTES:

ALL OF THE DISTURBED AREAS WITHIN CLEARING AND GRUBBING LIMITS SHALL BE HYDROSEEDED EXCEPT:

A. BASIN FLOOR AND BASIN INLET
B. MAINTENANCE ROADS
C. REVETTED SIDE SLOPES
D. DAM EMBANKMENT

REVEGETATION AREA – Place native duff from stockpile and hydroseed with Alluvial Fan Sage Scrub seed mix with accordance with the Cactus Basin No. 3 Habitat Restoration/Revegetation Plan Specification, dated November 2005.

BASELINE RCB PROJECT RIPARIAN HABITAT REVEGETATION AREA – Install cuttings and place seed over 0.8 acre in accordance with Cactus Basin No. 3 Revegetation Plan, dated July 2003. This work is regarded as mitigation for the Baseline RCB Project.

REGISTERED PROFESSIONAL ENGINEER JAMES PATRICK BORGUK No. 41807 Exp. 3/31/08 CIVIL STATE OF CALIFORNIA

SAN BERNARDINO COUNTY FLOOD CONTROL DISTRICT 1939 CALIFORNIA

REVISIONS

MARK	DATE	DESCRIPTION	BY:

SUBMITTED BY:

CHIEF, ENGINEERING DIVISION DATE

RECOMMENDED BY:

ASSIST. FLOOD CONTROL ENGINEER DATE

APPROVED BY:

FLOOD CONTROL ENGINEER DATE

PROJ. ENGR.	DES. BY:	REV'D BY:	DRAWN BY:
T.R.	S.F.B./D.J.N.	J.B.	S.F.B./D.J.N.

SAN BERNARDINO COUNTY FLOOD CONTROL DISTRICT

FONTANA–RIALTO DRAINAGE SYSTEM

CACTUS BASIN NO. 3

REVEGETATION PLAN

DATE	SCALE	FILE NO.	SHEET NO.
DEC. , 2007	AS SHOWN	2-104-	I-5

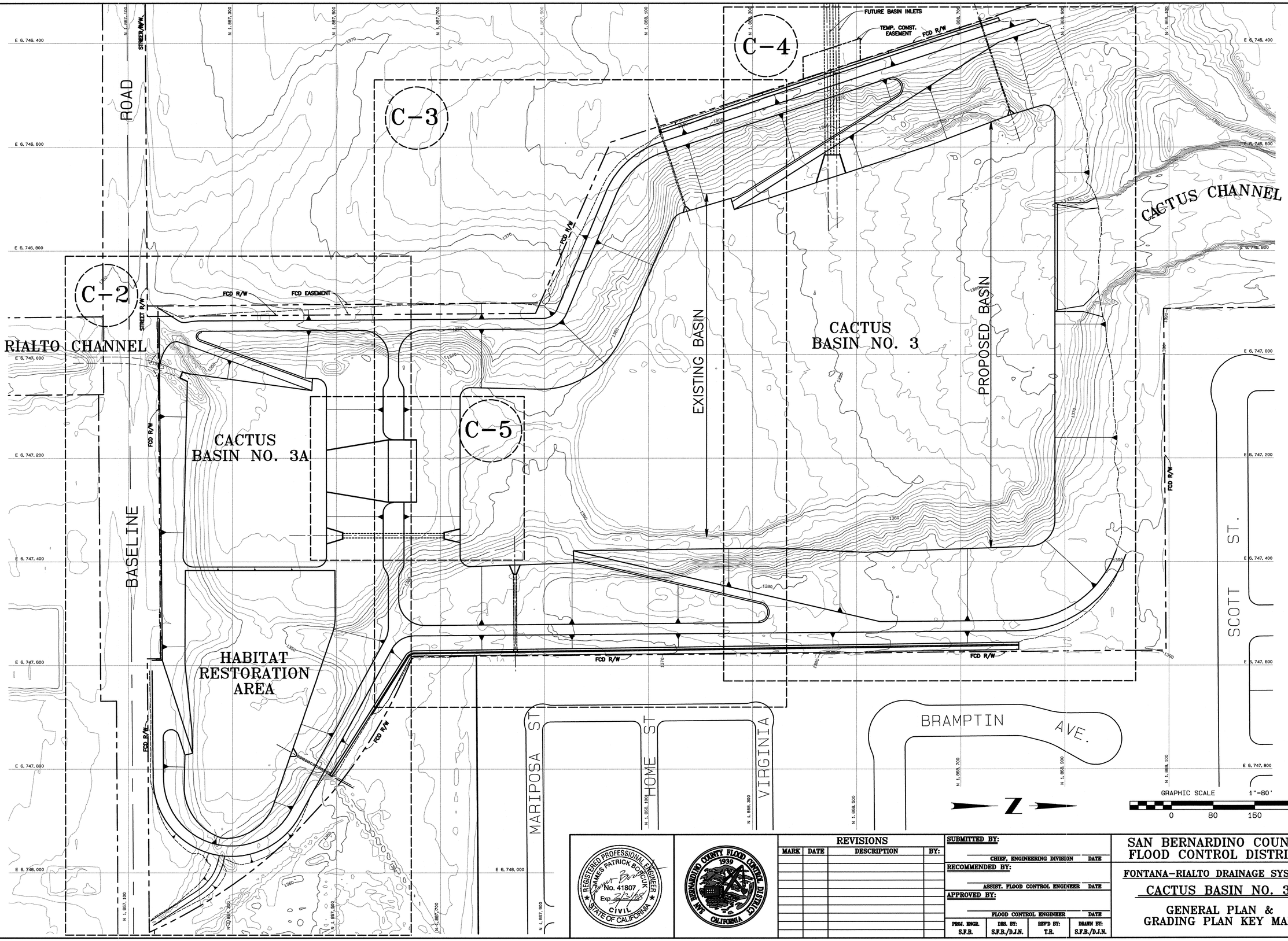

REGISTERED PROFESSIONAL ENGINEER
JAMES PATRICK BORCUK
No. 41807
Exp. 3/31/08
CIVIL
STATE OF CALIFORNIA

SAN BERNARDINO COUNTY FLOOD CONTROL DISTRICT 1939 CALIFORNIA

REVISIONS			
MARK	DATE	DESCRIPTION	BY:

SUBMITTED BY:
CHIEF, ENGINEERING DIVISION DATE

RECOMMENDED BY:
ASSIST. FLOOD CONTROL ENGINEER DATE

APPROVED BY:
FLOOD CONTROL ENGINEER DATE

PROJ. ENGR.	DES. BY:	REV'D BY:	DRAWN BY:
S.F.B.	S.F.B./D.J.N.	T.R.	S.F.B./D.J.N.

SAN BERNARDINO COUNTY FLOOD CONTROL DISTRICT

FONTANA-RIALTO DRAINAGE SYSTEM

CACTUS BASIN NO. 3

GENERAL PLAN & GRADING PLAN KEY MAP

DATE	DEC. , 2007
SCALE	AS SHOWN
FILE NO.	2-104-
SHEET NO.	G-1

PROJECT COORDINATES				
	NORTH	EAST	ELEVATION	DESCRIPTION
1	1,867,156.68	6,746,918.82	1358.00 FG	STA. 9+43.42 BEGIN ACCESS RAMP
2	1,867,203.18	6,746,951.05	1360.71 FG	STA.93+37.11 BC = STA. 10+00.00 END ACCESS RAMP = STA.119+67.55 EC
3	1,867,218.28	6,746,944.95		PI OF CURVE NO. 1
4	1,867,234.57	6,746,944.87	1361.60 FG	STA. 93+69.30 EC
5	1,867,549.41	6,746,943.28	1375.22 FG	STA. 96+84.14 BC
6	1,867,609.72	6,746,942.98		PI OF CURVE NO. 2
7	1,867,609.72	6,747,003.28	1377.60 FG	STA. 97+78.69 EC
8	1,867,609.72	6,747,224.59	1370.80 FG	STA.100+00.00 ℄ BASIN NO. 3A = STA. 10+00.00 SPILLWAY AXIS
9	1,867,609.72	6,747,224.59	1370.80 FG	STA.101+25.00 ℄ BASIN NO. 3A =STA. 10+00.00 96" RCP AXIS
10	1,867,609.72	6,747,526.13	1377.55 FG	STA.103+01.54 BC
11	1,867,609.72	6,747,541.55		PI OF CURVE NO. 3
12	1,867,602.28	6,747,555.06	1377.01 FG	STA.103+31.73 EC
13	1,867,420.28	6,747,885.73	1356.55 FG	STA.107+09.18 BC
14	1,867,380.38	6,747,958.22		PI OF CURVE NO. 4
15	1,867,297.63	6,747,958.22	1350.15 FG	STA.108+58.65 CC
16	1,867,291.65	6,747,958.22		PI OF CURVE NO. 5

PROJECT COORDINATES				
	NORTH	EAST	ELEVATION	DESCRIPTION
17	1,867,285.70	6,747,957.71	1349.63 FG	STA.108+70.59 EC
18	1,867,275.78	6,747,956.51	1349.63 FG	STA.108+80.58 BC
19	1,867,160.65	6,747,938.32		PI OF CURVE NO. 6
20	1,867,157.67	6,747,821.79	1358.02 FG	STA.110+74.99 EC
21	1,867,215.07	6,747,770.69	1344.30 FG	STA. 11+96.07 END SOUTH RAMP
22	1,867,155.37	6,747,584.25	1357.52 FG	STA.113+12.54 ℄ BASIN NO. 3A = STA. 10+00.00 ℄ SOUTH RAMP
23	1,867,150.00	6,747,029.40	1353.50 FG	STA.118+67.41 BC
24	1,867,150.32	6,746,972.39		PI OF CURVE NO. 7
25	1,867,183.25	6,746,962.44	1359.84 FG	STA.119+44.83 ℄ BASIN NO. 3A = STA. 10+00.00 ℄ WEST RAMP
26	1,867,453.14	6,747,061.43	1340.28 FG	STA. 12+87.47 END WEST RAMP
27	1,867,452.69	6,747,069.25	1340.25 FG	STA. 95+86.79 125.48 RT
28	1,867,454.04	6,747,045.73	1340.32 FG	STA. 95+88.25 101.96 RT
29	1,867,462.05	6,747,046.19	1340.50 FG	STA. 95+96.26 102.46 RT
30	1,867,480.67	6,747,066.14	1340.85 FG	STA. 96+14.78 122.51 RT
31	1,867,480.67	6,747,184.59	1340.85 FG	STA. 99+60.00 129.05 RT
32	1,867,480.67	6,747,264.59	1340.85 FG	STA.100+40.00 129.05 RT
33	1,867,480.67	6,747,334.59	1340.85 FG	STA.101+10.00 129.05 RT

PROJECT COORDINATES				
	NORTH	EAST	ELEVATION	DESCRIPTION
34	1,867,480.67	6,747,364.59	1340.85 FG	STA.101+40.00 129.05 RT
35	1,867,480.67	6,747,389.78	1340.85 FG	STA.101+65.19 129.05 RT
36	1,867,461.18	6,747,409.77	1340.85 FG	STA.101+85.18 148.54 RT
37	1,867,225.20	6,747,409.77	1340.85 FG	STA.114+86.33 71.51 RT
38	1,867,205.21	6,747,389.28	1340.57 FG	STA.115+07.02 51.72 RT
39	1,867,225.20	6,747,052.18	1335.13 FG	STA.118+44.02 63.39 RT = EXIST TOE OF WINGWALL
40	1,867,219.38	6,747,037.04	1335.13 FG	STA.18+59.10 69.31 RT = EXIST TOE OF WINGWALL
41	1,867,496.92	6,747,416.34	1343.00 FG	STA.101+91.75 112.79 RT
42	1,867,497.73	6,747,504.46	1343.41 FG	STA.102+79.87 111.99 RT
43	1,867,492.26	6,747,538.00	1343.51 FG	STA.103+69.84 104.61 RT
44	1,867,379.90	6,747,863.51	1344.52 FG	STA.107+09.18 46.09 RT
45	1,867,288.61	6,747,933.80	1345.00 FG	STA.108+69.55 24.07 RT
46	1,867,278.69	6,747,932.59	1345.00 FG	STA.108+81.63 24.08 RT
47	1,867,207.04	6,747,834.76	1344.43 FG	STA.110+53.28 47.92 RT
48	1,867,223.50	6,747,769.28	1344.37 FG	STA.111+26.86 66.33 RT
49	1,867,222.12	6,747,725.20	1344.20 FG	STA.111+70.95 65.38 RT
50	1,867,208.88	6,747,596.55	1343.70 FG	STA.112+99.73 53.38 RT
51	1,867,209.55	6,747,416.34	1343.00 FG	STA.114+79.92 55.80 RT

CURVE DATA			
	Δ	R	L
1	21°41'45"	85.00	32.19
2	90°17'20"	60.00	94.55
3	28°49'44"	60.00	30.19
4	61°10'16"	140.00	149.47
5	4°53'15"	140.00	11.94
6	79°33'43"	140.00	194.41
7	67°41'58"	85.00	100.43

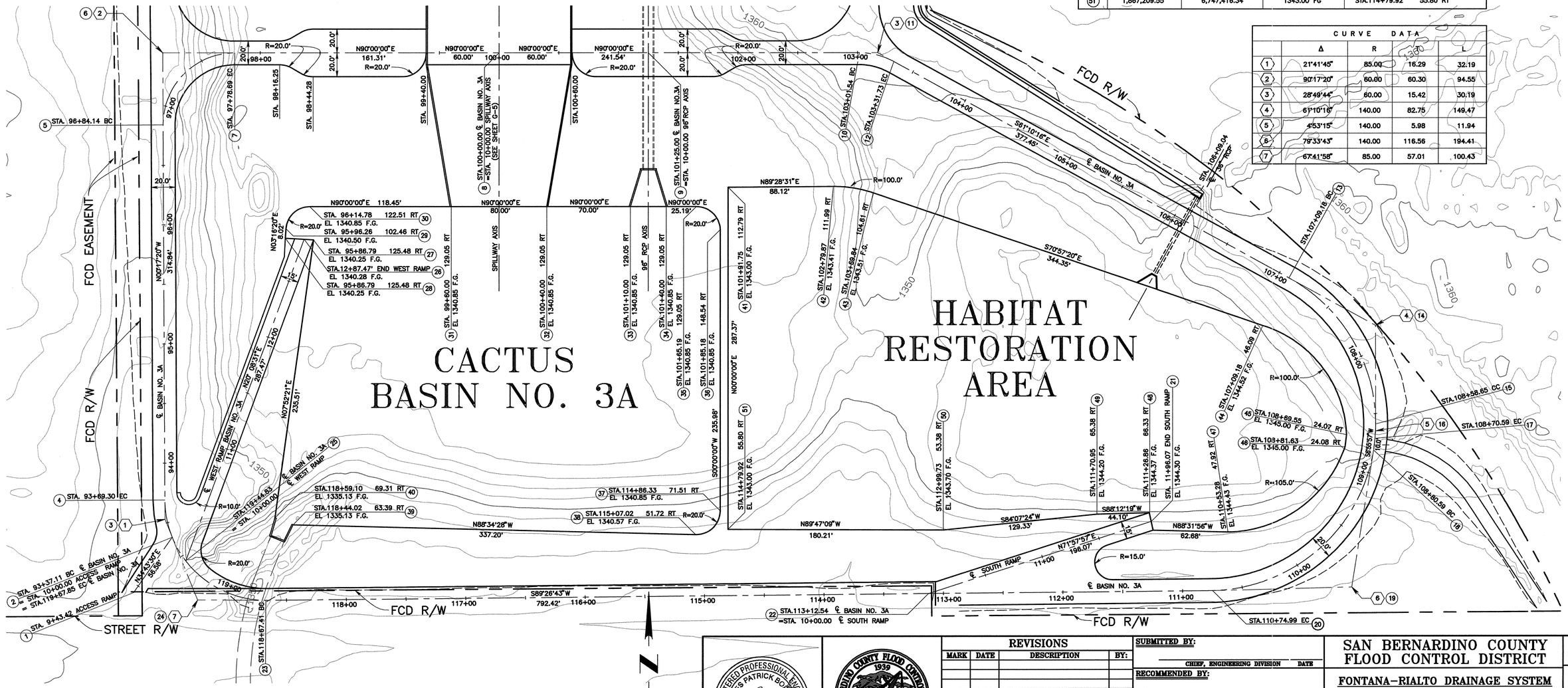

REGISTERED PROFESSIONAL ENGINEER JAMES PATRICK BORCHUK No. 41807 Exp. 3/31/08 CIVIL STATE OF CALIFORNIA

SAN BERNARDINO COUNTY FLOOD CONTROL DISTRICT 1939 CALIFORNIA

REVISIONS			
MARK	DATE	DESCRIPTION	BY:

SUBMITTED BY:
CHIEF, ENGINEERING DIVISION DATE

RECOMMENDED BY:
ASSIST. FLOOD CONTROL ENGINEER DATE

APPROVED BY:
FLOOD CONTROL ENGINEER DATE

PROJ. ENGR.	DES. BY:	REV'D BY:	DRAWN BY:
T.B.	S.F.B./D.J.N.	J.B.	S.F.B./D.J.N.

SAN BERNARDINO COUNTY FLOOD CONTROL DISTRICT

FONTANA-RIALTO DRAINAGE SYSTEM

CACTUS BASIN NO. 3

SURVEY MAP
BASIN NO. 3A AND
HABITAT RESTORATION AREA

DATE	DEC. ,2007
SCALE	AS SHOWN
FILE NO.	2-104-
SHEET NO.	G-2

CACTUS BASIN NO. 3

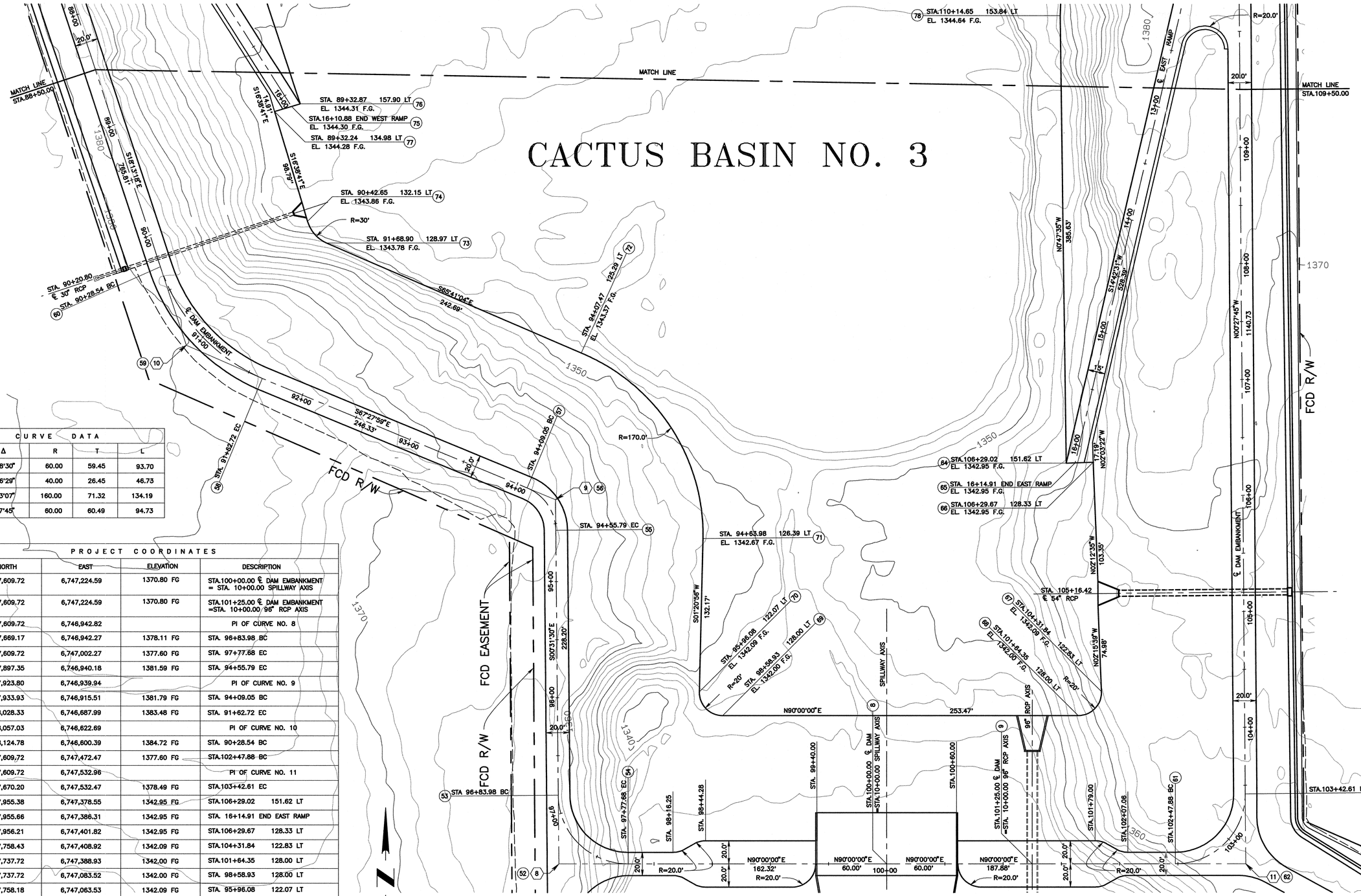

CURVE DATA				
	Δ	R	T	L
(8)	89°28'30"	60.00	59.45	93.70
(9)	66°56'29"	40.00	26.45	46.73
(10)	48°03'07"	160.00	71.32	134.19
(11)	90°27'45"	60.00	60.49	94.73

PROJECT COORDINATES				
	NORTH	EAST	ELEVATION	DESCRIPTION
(8)	1,867,609.72	6,747,224.59	1370.80 FG	STA.100+00.00 ℄ DAM EMBANKMENT = STA. 10+00.00 SPILLWAY AXIS
(9)	1,867,609.72	6,747,224.59	1370.80 FG	STA.101+25.00 ℄ DAM EMBANKMENT =STA. 10+00.00 96" RCP AXIS
(52)	1,867,609.72	6,746,942.82		PI OF CURVE NO. 8
(53)	1,867,669.17	6,746,942.27	1378.11 FG	STA. 96+83.98 BC
(54)	1,867,609.72	6,747,002.27	1377.60 FG	STA. 97+77.68 EC
(55)	1,867,897.35	6,746,940.18	1381.59 FG	STA. 94+55.79 EC
(56)	1,867,923.80	6,746,939.94		PI OF CURVE NO. 9
(57)	1,867,933.93	6,746,915.51	1381.79 FG	STA. 94+09.05 BC
(58)	1,868,028.33	6,746,687.99	1383.48 FG	STA. 91+62.72 EC
(59)	1,868,057.03	6,746,622.69		PI OF CURVE NO. 10
(60)	1,868,124.78	6,746,600.39	1384.72 FG	STA. 90+28.54 BC
(61)	1,867,609.72	6,747,472.47	1377.60 FG	STA.102+47.88 BC
(62)	1,867,609.72	6,747,532.96		PI OF CURVE NO. 11
(63)	1,867,670.20	6,747,532.47	1378.49 FG	STA.103+42.61 EC
(64)	1,867,955.38	6,747,378.55	1342.95 FG	STA.106+29.02 151.62 LT
(65)	1,867,955.66	6,747,386.31	1342.95 FG	STA. 16+14.91 END EAST RAMP
(66)	1,867,956.21	6,747,401.82	1342.95 FG	STA.106+29.67 128.33 LT
(67)	1,867,758.43	6,747,408.92	1342.09 FG	STA.104+31.84 122.83 LT
(68)	1,867,737.72	6,747,388.93	1342.00 FG	STA.101+64.35 128.00 LT
(69)	1,867,737.72	6,747,083.52	1342.00 FG	STA. 98+58.93 128.00 LT
(70)	1,867,758.18	6,747,063.53	1342.09 FG	STA. 95+96.08 122.07 LT
(71)	1,867,890.31	6,747,066.64	1342.67 FG	STA. 94+63.98 126.39 LT
(72)	1,868,050.26	6,746,962.06	1343.37 FG	STA. 94+07.47 125.29 LT
(73)	1,868,145.09	6,746,743.11	1343.78 FG	STA. 91+68.90 128.97 LT
(74)	1,868,163.80	6,746,726.78	1343.86 FG	STA. 90+42.65 132.15 LT
(75)	1,868,262.79	6,746,712.99	1344.30 FG	STA. 16+10.88 END WEST RAMP
(76)	1,868,265.02	6,746,720.46	1344.31 FG	STA. 89+32.87 157.90 LT
(77)	1,868,582.45	6,746,698.49	1344.28 FG	STA. 89+32.24 134.98 LT
(78)	1,868,340.97	6,747,373.21	1344.64 FG	STA.110+14.65 153.84 LT

GRAPHIC SCALE 1"=40'
0 40 80 120

REGISTERED PROFESSIONAL ENGINEER JAMES PATRICK BORCOCK No. 41807 Exp. 3/31/08 CIVIL STATE OF CALIFORNIA

SAN BERNARDINO COUNTY FLOOD CONTROL DISTRICT 1939 CALIFORNIA

REVISIONS			
MARK	DATE	DESCRIPTION	BY:

SUBMITTED BY:
CHIEF, ENGINEERING DIVISION DATE

RECOMMENDED BY:
ASSIST. FLOOD CONTROL ENGINEER DATE

APPROVED BY:
FLOOD CONTROL ENGINEER DATE

PROJ. ENGR.	DES. BY:	REV'D BY:	DRAWN BY:
T.R.	S.F.B./D.J.N.	J.B.	S.F.B./D.J.N.

SAN BERNARDINO COUNTY FLOOD CONTROL DISTRICT

FONTANA-RIALTO DRAINAGE SYSTEM

CACTUS BASIN NO. 3

SURVEY MAP SOUTH HALF OF BASIN NO. 3

DATE DEC. , 2007

SCALE AS SHOWN

FILE NO. 2-104-

SHEET NO. G-3

CACTUS BASIN NO. 3

CURVE DATA				
	Δ	R	T	L
(12)	68°10'17"	210.00	142.10	249.86

PROJECT COORDINATES				
	NORTH	EAST	ELEVATION	DESCRIPTION
(75)	1,868,262.79	6,746,712.99	1344.30 FG	STA.16+10.88 END WEST RAMP
(76)	1,868,265.02	6,746,720.46	1344.31 FG	STA. 89+32.87 157.90 LT
(77)	1,868,582.45	6,746,698.49	1344.28 FG	STA. 89+32.24 134.98 LT
(78)	1,868,340.97	6,747,373.21	1344.64 FG	STA.110+14.65 153.84 LT
(79)	1,868,868.42	6,746,355.58	1386.32 FG	STA. 82+45.64 ℄ DAM EMBANKMENT
(80)	1,868,852.18	6,746,360.93	1386.42 FG	STA. 82+62.73 MEET EXIST GROUND
(81)	1,868,783.26	6,746,383.62	1393.68 FG	STA. 83+35.29 BEGIN BASIN #3 CONST
(82)	1,868,778.31	6,746,385.25	1393.61 FG	STA. 83+40.50 ℄ DAM EMBANKMENT =STA.10+00.00 ℄ WEST RAMP
(83)	1,868,554.65	6,747,525.33	1390.55 FG	STA.112+27.09 ℄ DAM EMBANKMENT =STA.10+00.00 ℄ EAST RAMP
(84)	1,868,810.89	6,747,523.26	1394.05 FG	STA.114+83.34 BC END BASIN #3 CONST.
(85)	1,868,952.99	6,747,522.11		P.O.C. OF CURVE NO. 12
(86)	1,869,004.76	6,747,389.77	1389.77 FG	STA.117+33.20 EC
(87)	1,869,007.58	6,747,382.57	1389.44 FG	STA.117+40.94 MEET EXIST GROUND
(88)	1,869,027.25	6,747,332.27	1389.90 FG	STA.117+94.94 ℄ DAM EMBANKMENT
(89)	1,868,880.67	6,746,538.48	1374.00 FG	STA. 82+91.20 177.56 LT
(90)	1,868,854.91	6,746,519.33	1346.89 FG	STA. 83+09.57 151.31 LT
(91)	1,868,637.77	6,746,597.38	1345.94 FG	STA. 85+40.33 157.55 LT
(92)	1,868,880.67	6,747,320.57	1347.00 FG	STA.117+52.44 140.78 LT
(93)	1,868,832.45	6,747,370.53	1346.79 FG	STA.115+62.88 148.35 LT
(94)	1,868,516.09	6,747,381.72	1345.51 FG	STA.111+89.70 143.91 LT
(95)	1,868,880.67	6,746,707.32	1347.00 FG	STA. 83+43.99 337.93 LT
(96)	1,868,880.67	6,746,917.32	1347.00 FG	STA.121+27.97 287.69 LT

GRAPHIC SCALE 1"=40'
0 40 80 120

REGISTERED PROFESSIONAL ENGINEER JAMES PATRICK BOBZIUK No. 41807 Exp. 3/31/08 CIVIL STATE OF CALIFORNIA

SAN BERNARDINO COUNTY FLOOD CONTROL DISTRICT 1939 CALIFORNIA

REVISIONS			
MARK	DATE	DESCRIPTION	BY:

SUBMITTED BY: _____ CHIEF, ENGINEERING DIVISION DATE

RECOMMENDED BY: _____ ASSIST. FLOOD CONTROL ENGINEER DATE

APPROVED BY: _____ FLOOD CONTROL ENGINEER DATE

PROJ. ENGR.	DES. BY:	REV'D BY:	DRAWN BY:
T.R.	S.F.B./D.J.N.	J.B.	S.F.B./D.J.N.

SAN BERNARDINO COUNTY FLOOD CONTROL DISTRICT

FONTANA-RIALTO DRAINAGE SYSTEM

CACTUS BASIN NO. 3

SURVEY MAP
NORTH HALF OF
BASIN NO. 3

DATE	SCALE	FILE NO.	SHEET NO.
DEC. , 2007	AS SHOWN	2-104-	G-4

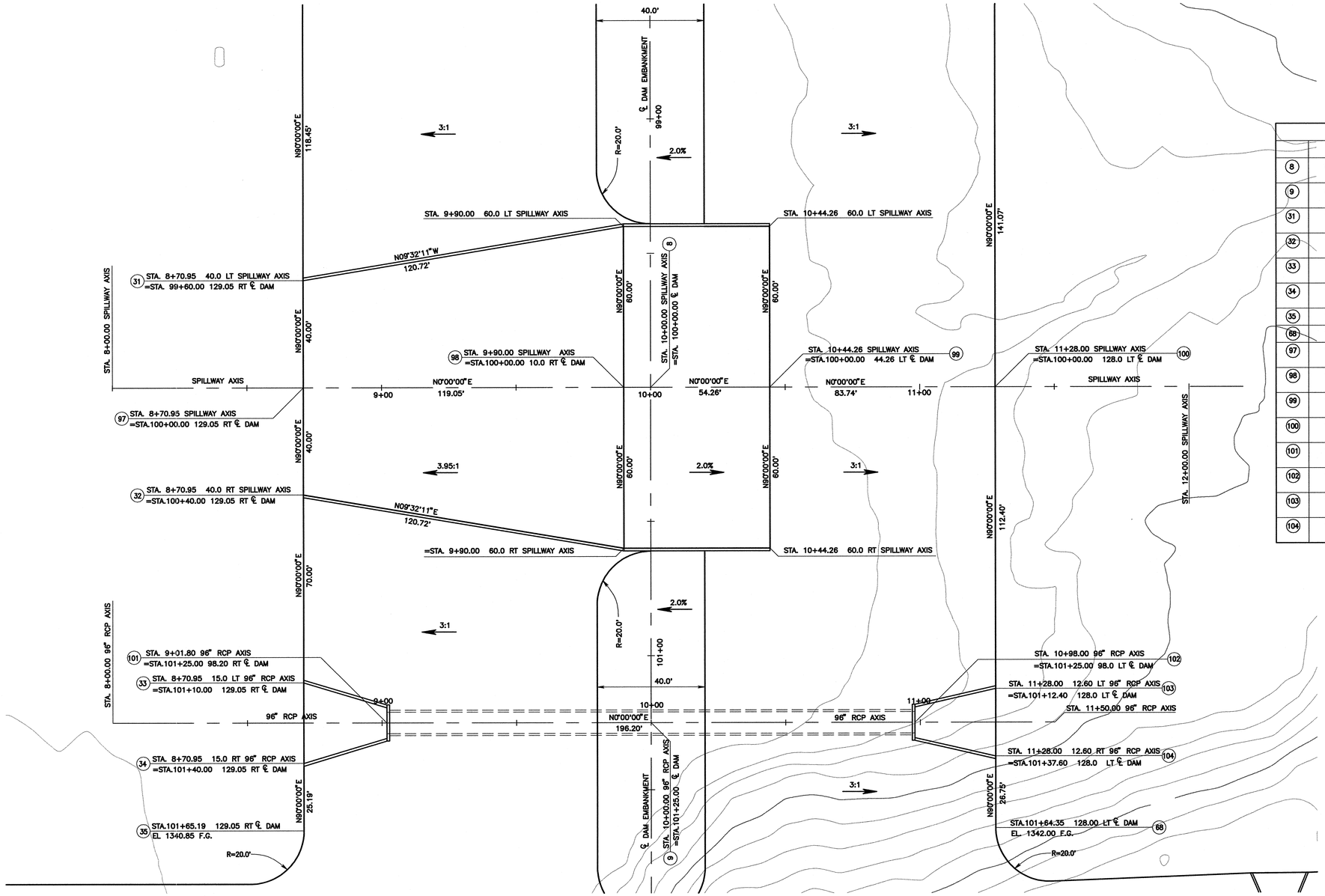

PROJECT COORDINATES				
	NORTH	EAST	ELEVATION	DESCRIPTION
8	1,867,609.72	6,747,224.59	1370.80 FG	STA.10+00.00 SPILLWAY AXIS =STA. 100+00.00 ℄ DAM EMBANKMENT
9	1,867,609.72	6,747,224.59		STA.10+00.00 96" RCP AXIS =STA. 101+25.00 ℄ DAM EMBANKMENT
31	1,867,480.67	6,747,184.59	1340.85 FG	STA. 8+70.95 40.0 LT SPILLWAY AXIS =STA. 99+60.00 129.05 RT ℄ DAM
32	1,867,480.67	6,747,264.59	1340.85 FG	STA. 8+70.95 40.0 RT SPILLWAY AXIS =STA.100+40.00 129.05 RT ℄ DAM
33	1,867,480.67	6,747,334.59	1340.85 FG	STA. 8+70.95 15.0' LT 96" RCP AXIS =STA.101+10.00 129.05 RT ℄ DAM
34	1,867,480.67	6,747,364.59	1340.85 FG	STA. 8+70.95 15.0' RT 96" RCP AXIS =STA.101+40.00 129.05 RT ℄ DAM
35	1,867,480.67	6,747,389.78	1340.85 FG	STA.101+65.19 129.05 RT ℄ DAM
68	1,867,737.72	6,747,388.93	1342.00 FG	STA.101+64.35 128.00 LT ℄ DAM
97	1,867,480.67	6,747,224.59	1340.85 FG	STA. 8+70.95 SPILLWAY AXIS =STA.100+00.00 129.05 RT ℄ DAM
98	1,867,599.72	6,747,224.59	1371.00 FG	STA. 9+90.00 SPILLWAY AXIS =STA.100+00.00 10.0 RT ℄ DAM
99	1,867,653.98	6,747,224.59	1369.91 FG	STA. 10+44.26 SPILLWAY AXIS =STA.100+00.00 44.26 LT ℄ DAM
100	1,867,737.72	6,747,224.59	1342.00 FG	STA. 11+28.00 SPILLWAY AXIS =STA.100+00.00 128.0 RT ℄ DAM
101	1,867,511.52	6,747,349.59	1340.99 FG INV	STA. 9+01.80 96" RCP AXIS =STA.101+25.00 98.20 RT ℄ DAM
102	1,867,707.72	6,747,349.59	1342.00 FG INV	STA. 10+98.00 96" RCP AXIS =STA.101+25.00 98.0 LT ℄ DAM
103	1,867,737.72	6,747,336.99	1342.00 FG	STA. 11+28.00 12.6 LT 96" RCP AXIS =STA.101+12.40 128.0 LT ℄ DAM
104	1,867,737.72	6,747,362.19	1342.00 FG	STA. 11+28.00 12.6 RT 96" RCP AXIS =STA.101+37.60 128.0 LT ℄ DAM

N

GRAPHIC SCALE 1"=20'

0 20 40 60

REGISTERED PROFESSIONAL ENGINEER
JAMES PATRICK BORCHCK
No. 41807
Exp. 3/31/08
CIVIL
STATE OF CALIFORNIA

SAN BERNARDINO COUNTY FLOOD CONTROL DISTRICT 1939 CALIFORNIA

REVISIONS			
MARK	DATE	DESCRIPTION	BY:

SUBMITTED BY:

CHIEF, ENGINEERING DIVISION DATE

RECOMMENDED BY:

ASSIST. FLOOD CONTROL ENGINEER DATE

APPROVED BY:

FLOOD CONTROL ENGINEER DATE

PROJ. ENGR.	DES. BY:	REV'D BY:	DRAWN BY:
T.R.	S.F.B./D.J.N.	J.B.	S.F.B./D.J.N.

SAN BERNARDINO COUNTY
FLOOD CONTROL DISTRICT

FONTANA–RIALTO DRAINAGE SYSTEM

CACTUS BASIN NO. 3

SURVEY MAP
SPILLWAY AND 96"RCP
BASIN OUTLET DRAIN

DATE	DEC. , 2007
SCALE	AS SHOWN
FILE NO.	2-104-
SHEET NO.	G-5

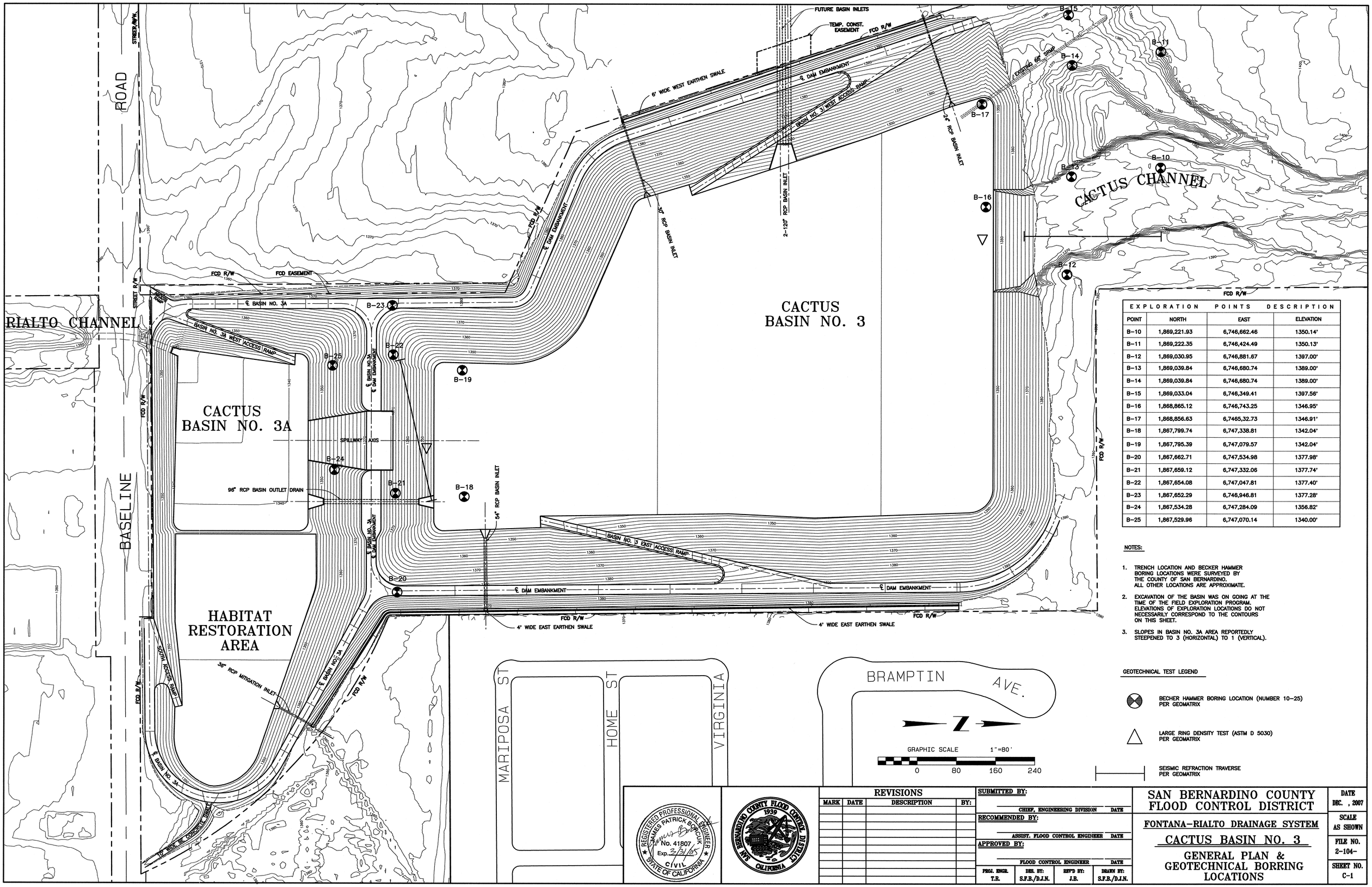

CACTUS BASIN NO. 3

EXPLORATION POINTS DESCRIPTION			
POINT	NORTH	EAST	ELEVATION
B-10	1,869,221.93	6,746,662.46	1350.14'
B-11	1,869,222.35	6,746,424.49	1350.13'
B-12	1,869,030.95	6,746,881.67	1397.00'
B-13	1,869,039.84	6,746,680.74	1389.00'
B-14	1,869,039.84	6,746,680.74	1389.00'
B-15	1,869,033.04	6,746,349.41	1397.56'
B-16	1,868,865.12	6,746,743.25	1346.95'
B-17	1,868,856.63	6,7465,32.73	1346.91'
B-18	1,867,799.74	6,747,338.81	1342.04'
B-19	1,867,795.39	6,747,079.57	1342.04'
B-20	1,867,662.71	6,747,534.98	1377.98'
B-21	1,867,659.12	6,747,332.06	1377.74'
B-22	1,867,654.08	6,747,047.81	1377.40'
B-23	1,867,652.29	6,746,946.81	1377.28'
B-24	1,867,534.28	6,747,284.09	1356.82'
B-25	1,867,529.96	6,747,070.14	1340.00'

NOTES:

1. TRENCH LOCATION AND BECKER HAMMER BORING LOCATIONS WERE SURVEYED BY THE COUNTY OF SAN BERNARDINO. ALL OTHER LOCATIONS ARE APPROXIMATE.
2. EXCAVATION OF THE BASIN WAS ON GOING AT THE TIME OF THE FIELD EXPLORATION PROGRAM. ELEVATIONS OF EXPLORATION LOCATIONS DO NOT NECESSARILY CORRESPOND TO THE CONTOURS ON THIS SHEET.
3. SLOPES IN BASIN NO. 3A AREA REPORTEDLY STEEPENED TO 3 (HORIZONTAL) TO 1 (VERTICAL).

GEOTECHNICAL TEST LEGEND

- BECHER HAMMER BORING LOCATION (NUMBER 10-25) PER GEOMATRIX
- LARGE RING DENSITY TEST (ASTM D 5030) PER GEOMATRIX
- SEISMIC REFRACTION TRAVERSE PER GEOMATRIX

REGISTERED PROFESSIONAL ENGINEER JAMES PATRICK BORCHUK No. 41807 Exp. 3/31/09 CIVIL STATE OF CALIFORNIA

SAN BERNARDINO COUNTY FLOOD CONTROL DISTRICT 1939 CALIFORNIA

REVISIONS			
MARK	DATE	DESCRIPTION	BY:

SUBMITTED BY:
CHIEF, ENGINEERING DIVISION DATE

RECOMMENDED BY:
ASSIST. FLOOD CONTROL ENGINEER DATE

APPROVED BY:
FLOOD CONTROL ENGINEER DATE

PROJ. ENGR.	DES. BY:	REV'D BY:	DRAWN BY:
T.R.	S.F.B./D.J.N.	J.B.	S.F.B./D.J.N.

SAN BERNARDINO COUNTY FLOOD CONTROL DISTRICT

FONTANA-RIALTO DRAINAGE SYSTEM

CACTUS BASIN NO. 3

GENERAL PLAN & GEOTECHNICAL BORRING LOCATIONS

DATE	DEC. , 2007
SCALE	AS SHOWN
FILE NO.	2-104-
SHEET NO.	C-1

CONSTRUCTION CALLOUTS:

1. INTERCEPTOR V-DITCH PER (STD)
2. 3" AC PVMT ROAD SECTION PER (STD)
3. 10' WIDE CONCRETE SWALE PER (STD)
4. GRAVEL PAD PER (STD)
5. CONCRETED SPLASH PAD PER (STD)
7. BOUNDARY FENCE PER SHT FCD-I
8. CHANNEL FENCE PER SHT FCD-II
9. DOUBLE DRIVE GATE PER SHT FCD-I
10. WALK GATE PER SHT FCD-II
11. SPILLWAY ACCESS LADDER PER SHT S-7
12. HEADWALL WING-TYPE PER SBC STD. DRWG. 209
16. SLOPED PROTECTION BARRIER PER APWA SP 360-0 (STD)
18. 4' WIDE EAST EARTHEN SWALE PER (STD)
21. 36" RCP 'L' HEADWALL PER CALTRANS SP D89

CONSTRUCTION NOTES:

1. CONSTRUCT SOUTH EMBANKMENT FOR BASIN NO. 3 PER PLAN ON SHEETS C-2 & C3 , PROFILE ON SHEETS P-2 & P-4, SECTIONS ON SHEETS X-11 TO X-13 & X-23 TO X-25 AND SURVEY CONTROL DATA ON SHEETS G-2 & G-3
4. CONSTRUCT SOUTH EMBANKMENT FOR BASIN NO. 3A SOUTH OF BASIN NO. 3 PER PLAN ON SHEET C-2, PROFILE ON SHEET P-5, SECTIONS ON SHEETS X-29 TO X-34, AND SURVEY CONTROL DATA ON SHEET G-2.
5. CONSTRUCT EAST AND WEST EMBANKMENTS FOR BASIN NO. 3A AND HABITAT RESTORATION AREA, SOUTH OF BASIN NO. 3 PER PLAN ON SHEET C-2, PROFILE ON SHEETS P4 & P-5, SECTIONS ON SHEETS X-21 TO X-23 & X-26 TO X-30 AND SURVEY CONTROL DATA ON SHEET G-2.
6. CONSTRUCT HABITAT RESTORATION AREA SOUTH EAST OF CACTUS BASIN NO. 3 PER PLAN ON SHEET C-2, PROFILE ON SHEETS P4 & P5, SECTIONS ON SHEET X-25 TO X-32, AND SURVEY CONTROL DATA ON SHEET G-2.
9. CONSTRUCT WEST MAINTENANCE ACCESS RAMP FOR BASIN NO. 3A PER PLAN ON SHEET C-2, PROFILE ON SHEET P-4, TYPICAL SECTION ON SHEET C-2, AND SURVEY CONTROL DATA ON SHEET G-2.
10. CONSTRUCT SOUTH MAINTENANCE ACCESS RAMP FOR HABITAT RESTORATION AREA PER PLAN ON SHEET C-2, PROFILE ON SHEET P-5, TYPICAL SECTION ON SHEET C-2, AND SURVEY CONTROL DATA ON SHEET G-2.
11. CONSTRUCT REINFORCED CONCRETE SPILLWAY PER PLAN ON SHEETS C-2, C-3, C-5 & C-6, PROFILE ON SHEETS C-5, DETAILS ON SHEETS C-6, C-7 & S-5, AND SURVEY CONTROL DATA ON SHEETS G-2, G-3 & G-5.
12. CONSTRUCT APPROX. 197 LINEAR FEET OF 96" RCP OUTLET BASIN DRAIN PER PLAN C-2, C-3, C-5 & S-5, PROFILE ON SHEET S-2 AND DETAILS ON SHEETS S-2 & S-3 (D-LOAD PER PROFILE)
13. CONSTRUCT 96" RCP ENCASEMENT PER DETAIL ON SHEET S-4
14. CONSTRUCT HEADWALL AND WINGWALLS FOR 96" RCP OUTLET PER PLAN ON SHEETS C-2, C-3, C-5 & S-2, PROFILE ON SHEET S-2, DETAILS ON SHEET S-2 & S-3 AND STRUCTURAL DETAILS ON SHEETS S-8 & S-9 PER CALTRANS STD. DETAIL D90A
15. CONSTRUCT WEST AND EAST ACCESS ROAD PER PLAN, TYPICAL SECTIONS ON SHEETS C-2 TO C-4, AND SURVEY CONTROL DATA ON SHEETS G-2 TO G-4.
16. CONSTRUCT APPROX. 76 LINEAR FEET OF 36" RCP PER PLAN AND DETAILS ON SHEET SD-1 (D-LOAD PER PROFILE)
18. REMOVE AND REPLACE ROCK SLOPE PROTECTION AFTER FINISH GRADING 2.0' THICK RSP, CLASS 'LIGHT' USING METHOD "A" PLACEMENT TO ELEVATION = 1348'
19. REMOVE AND REPLACE ROCK PROTECTION AFTER FINISH GRADING CHECK DAM IN BASIN NO. 3A
20. PROTECT IN PLACE EXISTING RCB OUTLET STRUCTURE IN BASIN NO. 3A
21. PROTECT IN PLACE EXISTING HEADWALL AND WINGWALL FOR RCB
22. PROTECT IN PLACE EXISTING BOUNDARY CHAIN LINK FENCE
24. PROTECT IN PLACE THE EXISTING TREE(S) IN THE HABITAT RESTORATION AREA
25. PROTECT IN PLACE THE EXISTING STAFF GAUGE IN THE HABITAT RESTORATION AREA
26. PROTECT IN PLACE EXISTING 36" CMP
27. REMOVE AND DISPOSE EXISTING 36" CMP
28. CONSTRUCT ROCK CUT-OFF WALLS AROUND THE OUTSIDE PERIMETER OF ROCK RIP RAP AREAS AS FOLLOWS:
    THE OUTSIDE PERIMETER OF 1/2 TON UNGROUTED ROCK RIP RAP AREAS SHALL BE 5' DEEP AND 5' WIDE
    THE OUTSIDE PERIMETER OF 1/4 TON GROUTED ROCK RIP RAP SHALL BE 5' DEEP AND 3' WIDE
    THE OUTSIDE PERIMETER OF GROUTED FACING ROCK SHALL BE 3' WIDE AND 3' DEEP
29. CONSTRUCT CONCRETE CUT-OFF WALLS PER PLAN ON SHEETS C-2, C-3, C-5 & C-6 AND DETAILS ON SHEET S-3 & S-6
30. CONSTRUCT SPILLWAY SUBDRAIN SYSTEM PER PLAN ON SHEET C-6, SECTIONS & DETAILS ON SHEETS C-6 & C-7.
31. REMOVE EXISTING BOUNDARY FENCE AND GATES FROM BASELINE RD. AT APPROX. STA 114+00 ± TO EAST END AND REPLACE FENCE PER FCD-I TO STA 113+06.81 TO STA 114+00 ±
32. MOVE BOUNDARY FENCE FROM STA 113+06.81 TO THE EAST 25'± TO THE SOUTH PER FCD-I
33. REMOVE EXISTING 20' DOUBLE DRIVE GATE AND RE-INSTALL 20' DOUBLE DRIVE GATE AT STA 113+94± TO STA 112+86.81 AND AT LOCATION SHOWN HEREON AND PER DETAIL SHOWN ON FCD-I
34. CONSTRUCT 20' CONCRETE DRIVEWAY PER SAN BERNARDINO COUNTY STD. 128
36. REMOVE AND DISPOSE EXISTING DOUBLE DRIVE GATE
37. REMOVE AND RE-INSTALL BOUNDARY FENCE AFTER EXCAVATION PER SHEET FCD I

MATERIAL ZONES:

- ZONE (1) MIXED, BORROW FROM BASIN EXCAVATION
- ZONE (2) CLASS 2 AGGREGATE BASE, 6" DEEP
- ZONE (3) 3" AC PAVEMENT (ON 6" OF ZONE 2, 95% RELATIVE COMPACTION)
- ZONE (4) CONCRETED ROCK SLOPE PROTECTION (RSP). 1/4 TON, METHOD 'A' PLACEMENT
- ZONE (5) CONCRETED ROCK SPLASH PAD, FACING CLASS, METHOD 'A' PLACEMENT
- ZONE (6) 1/4 TON GROUTED ROCK RIP-RAP, THICKNESS = 3' MIN., DEPTH OF GROUT PENETRATION =1.25', METHOD 'A' PLACEMENT
- ZONE (7) 1/2 TON UNGROUTED ROCK RIP-RAP, THICKNESS = 3.5' MIN., METHOD 'A' PLACEMENT
- ZONE (8) CONCRETED FACING ROCK, THICKNESS = 1.5' MIN., DEPTH OF GROUT PENETRATION =.75', METHOD 'A' PLACEMENT
- ZONE (9) GRAVEL PAD ON BASIN FLOOR ADJACENT TO RAMPS PER (STD)

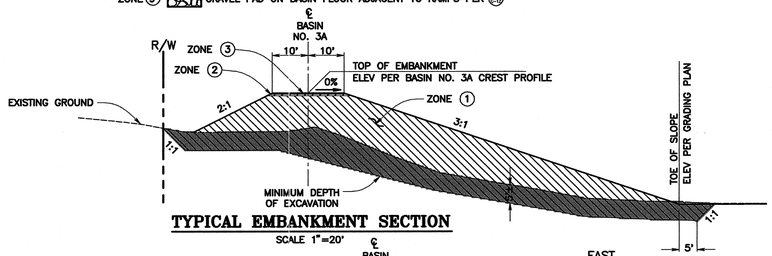

TYPICAL EMBANKMENT SECTION
SCALE 1"=20'

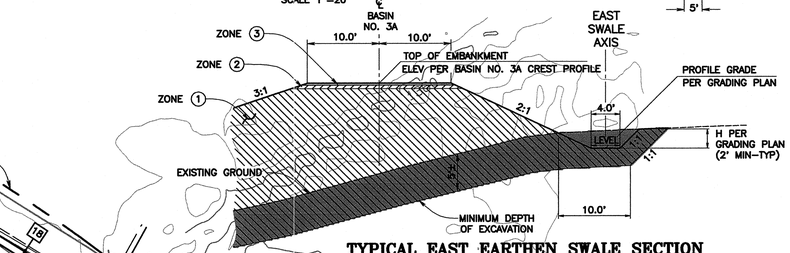

TYPICAL EAST EARTHEN SWALE SECTION
SCALE 1"=10'

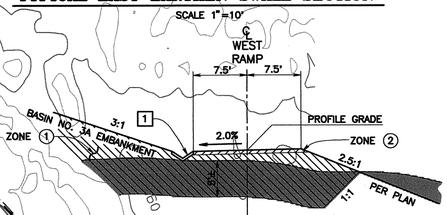

TYPICAL WEST RAMP SECTION
SCALE 1"=10'

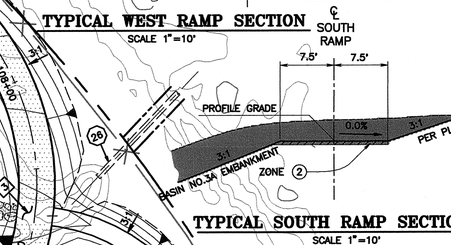

TYPICAL SOUTH RAMP SECTION
SCALE 1"=10'

EXCAVATION

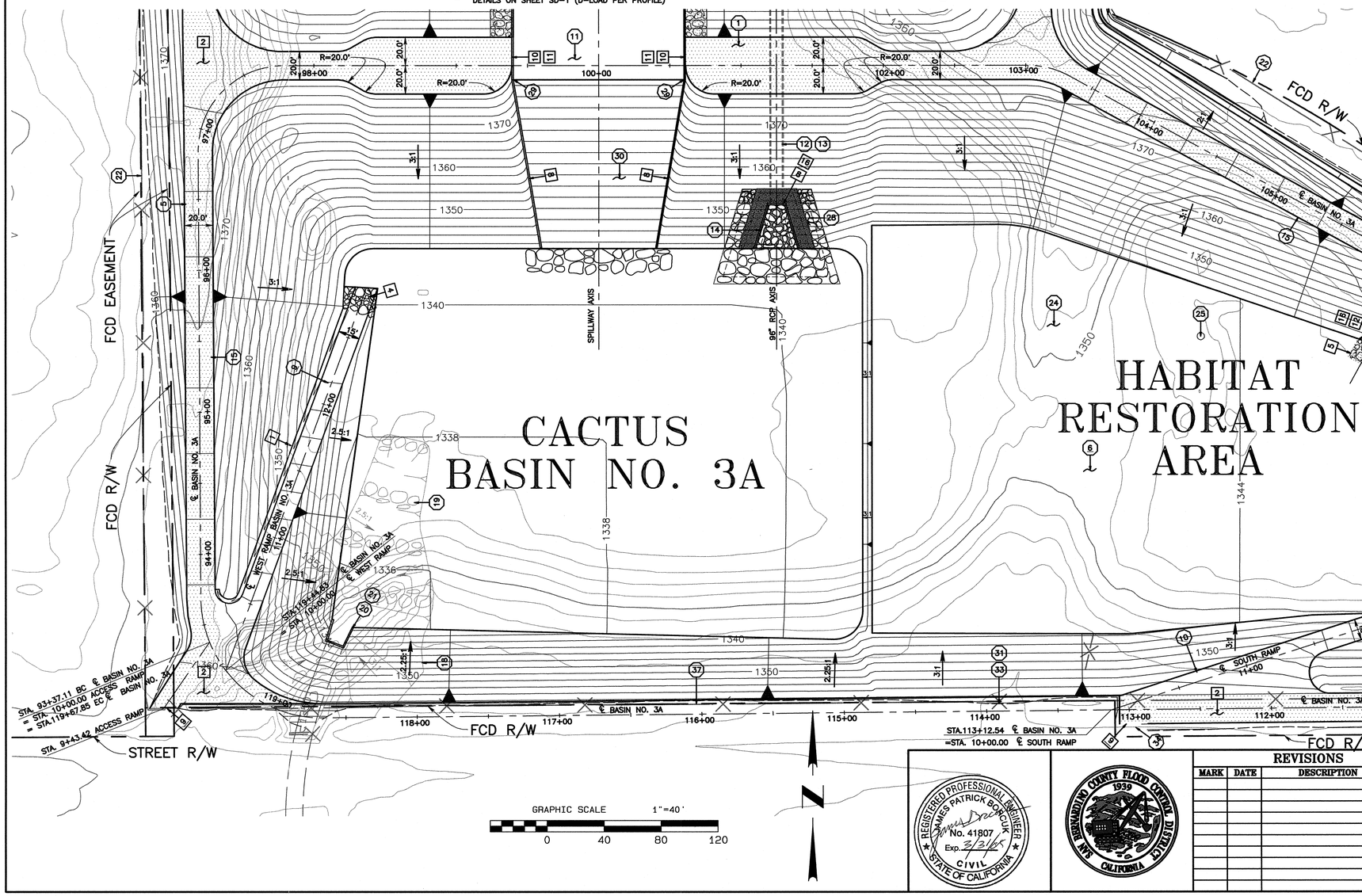

REGISTERED PROFESSIONAL ENGINEER
JAMES PATRICK BORCUK
No. 41807
Exp. 3/31/08
CIVIL
STATE OF CALIFORNIA

SAN BERNARDINO COUNTY FLOOD CONTROL DISTRICT 1939 CALIFORNIA

REVISIONS

MARK	DATE	DESCRIPTION	BY:

SUBMITTED BY:
CHIEF, ENGINEERING DIVISION DATE
RECOMMENDED BY:
ASSIST. FLOOD CONTROL ENGINEER DATE
APPROVED BY:
FLOOD CONTROL ENGINEER DATE

PROJ. ENGR.	DES. BY:	REV'D BY:	DRAWN BY:
T.R.	S.F.B./D.J.N.	J.B.	S.F.B./D.J.N.

SAN BERNARDINO COUNTY FLOOD CONTROL DISTRICT

FONTANA-RIALTO DRAINAGE SYSTEM

CACTUS BASIN NO. 3

GRADING PLAN BASIN NO. 3A AND HABITAT RESTORATION AREA

DATE	DEC. , 2007
SCALE	AS SHOWN
FILE NO.	2-104-
SHEET NO.	C-2

CACTUS BASIN NO. 3

CONSTRUCTION CALLOUTS:

1. INTERCEPTOR V-DITCH PER (STD)
2. 3" AC PVMT ROAD SECTION PER (STD)
4. GRAVEL PAD PER (STD)
5. CONCRETED SPLASH PAD PER (STD)
6. CONCRETE COLLAR PER APWA SP 380-3
7. BOUNDARY FENCE PER SHT FCD-I
8. CHANNEL FENCE PER SHT FCD-II
10. WALK GATE PER SHT FCD-II
11. SPILLWAY ACCESS LADDER PER SHT S-7
12. HEADWALL WING-TYPE PER SBC STD. DRWG. 209
14. DRAINAGE INLET TYPE G2 FOR 54" RCP PER CALTRANS SP D73
15. DRAINAGE INLET TYPE G2 FOR 30" RCP PER CALTRANS SP D73
16. SLOPED PROTECTION BARRIER PER APWA SP 360-0 (STD)
17. 6' WIDE WEST EARTHEN SWALE PER (STD)
18. 4' WIDE EAST EARTHEN SWALE PER (STD)

CONSTRUCTION NOTES:

1. CONSTRUCT SOUTH EMBANKMENT FOR BASIN NO. 3 PER PLAN ON SHEETS C-2 & C-3, PROFILE ON SHEETS P-2 & P-4, SECTIONS ON SHEETS X-11 TO X-13 & X-23 TO X-25 AND SURVEY CONTROL DATA ON SHEETS G-2 & G-3
2. CONSTRUCT EAST AND WEST EMBANKMENTS FOR SOUTH HALF OF BASIN NO. 3 PER PLAN ON SHEET C-3, PROFILE ON SHEETS P-1 TO P-3, SECTIONS ON SHEETS X-5 TO X-10 & X-13 TO X-16 AND SURVEY CONTROL DATA ON SHEET G-3
7. CONSTRUCT EAST MAINTENANCE ACCESS RAMP FOR BASIN NO. 3 PER PLAN ON SHEETS C3 & C4, PROFILE ON SHEET P-3, TYPICAL SECTION ON SHEET C-3, AND SURVEY CONTROL DATA ON SHEETS G-3 & G-4.
11. CONSTRUCT REINFORCED CONCRETE SPILLWAY PER PLAN ON SHEETS C-2, C-3, C-5 & C-6, PROFILE ON SHEETS C-5, DETAILS ON SHEETS C-6, C-7 & S-5, AND SURVEY CONTROL DATA ON SHEETS G-2, G-3 & G-5.
12. CONSTRUCT APPROX. 197 LINEAR FEET OF 96" RCP OUTLET BASIN DRAIN PER PLAN C-2, C-3, C-5 & S-5, PROFILE ON SHEET S-2 AND DETAILS ON SHEETS S-2 & S-3 (D-LOAD PER PROFILE)
13. CONSTRUCT 96" RCP ENCASEMENT PER DETAIL ON SHEET S-4
14. CONSTRUCT HEADWALL AND WINGWALLS FOR 96" RCP OUTLET PER PLAN ON SHEETS C-2, C-3, C-5 & S-2, PROFILE ON SHEET S-2, DETAILS ON SHEET S-2 & S-3 AND STRUCTURAL DETAILS ON SHEETS S-8 & S-9 PER CALTRANS STD. DETAIL D90A
15. CONSTRUCT WEST AND EAST ACCESS ROAD PER PLAN, TYPICAL SECTIONS ON SHEETS C-2 TO C-4, AND SURVEY CONTROL DATA ON SHEETS G-2 TO G-4.
17. CONSTRUCT APPROX. 146 LINEAR FEET OF 54" RCP INLET PER PLAN AND DETAILS ON SHEETS SD4A & SD4B (D-LOAD PER PROFILE)
22. PROTECT IN PLACE EXISTING BOUNDARY CHAIN LINK FENCE
23. REMOVE AND DISPOSE OF EXISTING CHAIN LINK FENCE CROSSING CACTUS BASIN 3
28. CONSTRUCT CONCRETE CUT-OFF WALLS PER PLAN ON SHEETS C-2, C-3, C-5 & C-6 AND DETAILS ON SHEET S-3 & S-6
30. CONSTRUCT SPILLWAY SUBDRAIN SYSTEM PER PLAN ON SHEET C-6, SECTIONS & DETAILS ON SHEETS C-6 & C-7.
35. PROTECT IN PLACE EXISTING BLOCK WALL
36. REMOVE AND DISPOSE EXISTING DOUBLE DRIVE GATE
39. BREAK AND REPLACE EXISTING 30" RCP PER PLAN, PROFILE ON SHEETS SD-3, SECTION ON SHEET SD-3 AND SURVEY CONTROL DATA ON SHEET G-3.
43. CONSTRUCT 10" THICK REINFORCED CONCRETE FLOATER SLAB PER PLAN AND DETAILS ON SHEET S-3
46. SAWCUT AND CONNECT EXISTING 24" RCP TO DRAINAGE INLET PER PLAN, PROFILE ON SHEET SD-4, PER APWA SP 308-1, CORNER CONNECTION

MATERIAL ZONES:

- ZONE (1) MIXED, BORROW FROM BASIN EXCAVATION
- ZONE (2) CLASS 2 AGGREGATE BASE, 6" DEEP
- ZONE (3) 3" AC PAVEMENT (ON 6" OF ZONE 2, 95% RELATIVE COMPACTION)
- ZONE (4) CONCRETED ROCK SLOPE PROTECTION (RSP). 1/4 TON, METHOD 'A' PLACEMENT
- ZONE (5) CONCRETED ROCK SPLASH PAD, FACING CLASS, METHOD 'A' PLACEMENT
- ZONE (6) 1/4 TON GROUTED ROCK RIP-RAP, THICKNESS = 3' MIN., DEPTH OF GROUT PENETRATION =1.25', METHOD 'A' PLACEMENT
- ZONE (8) CONCRETED FACING ROCK, THICKNESS = 1.5' MIN., DEPTH OF GROUT PENETRATION =.75', METHOD 'A' PLACEMENT
- ZONE (9) GRAVEL PAD ON BASIN FLOOR ADJACENT TO RAMPS PER (STD)

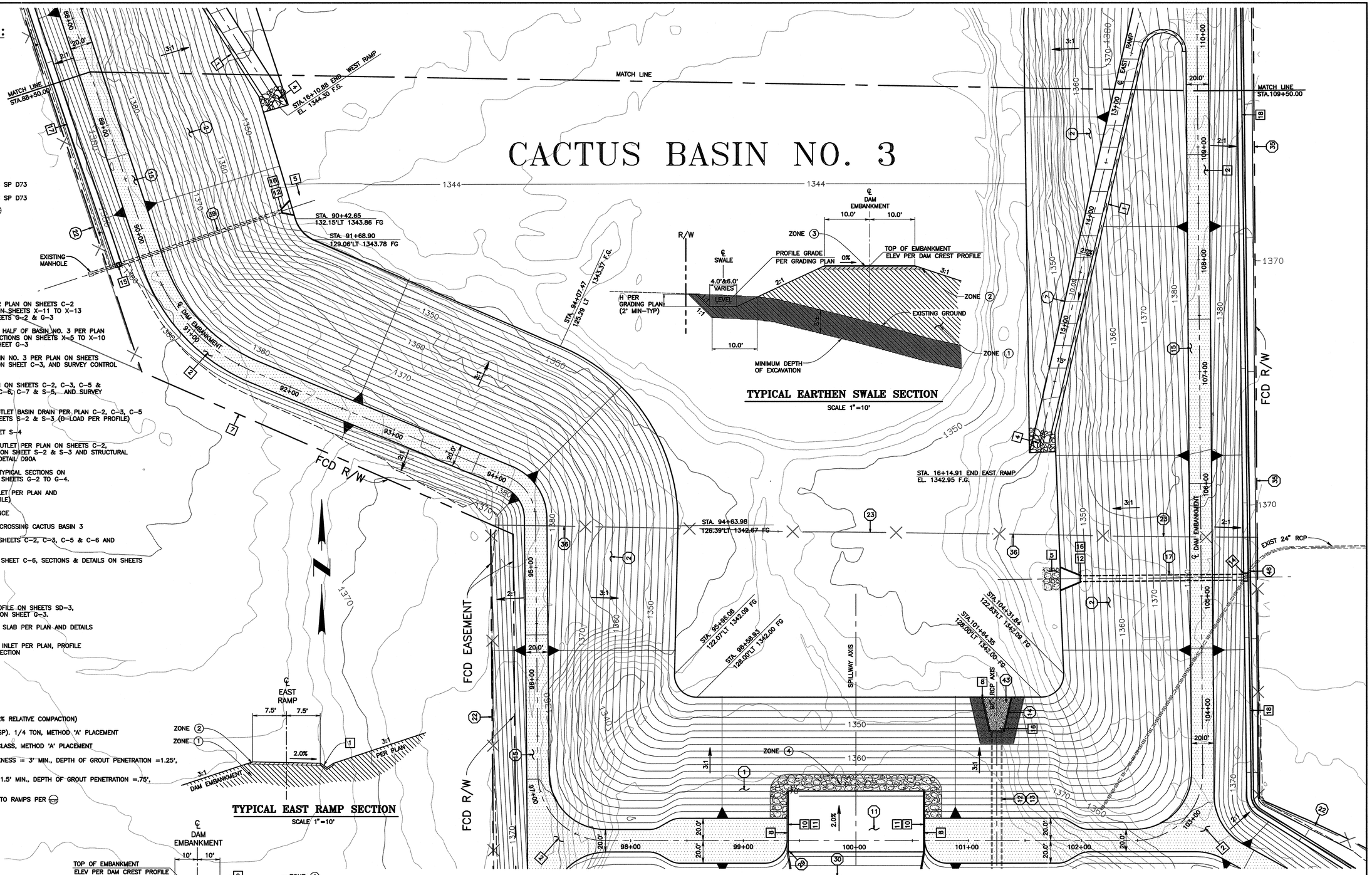

TYPICAL EARTHEN SWALE SECTION
SCALE 1"=10'

TYPICAL EAST RAMP SECTION
SCALE 1"=10'

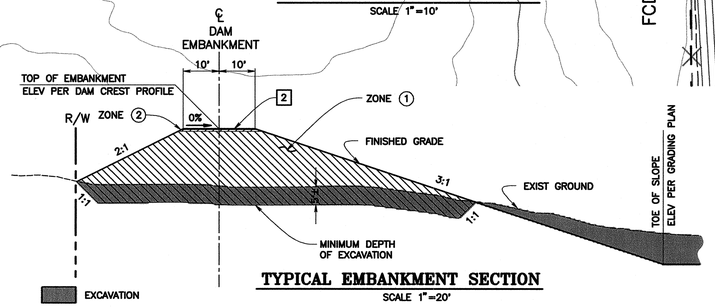

TYPICAL EMBANKMENT SECTION
SCALE 1"=20'

GRAPHIC SCALE 1"=40'
0 40 80 120

REGISTERED PROFESSIONAL ENGINEER JAMES PATRICK BORCHUK No. 41807 Exp. 3/31/08 CIVIL STATE OF CALIFORNIA

SAN BERNARDINO COUNTY FLOOD CONTROL DISTRICT 1939 CALIFORNIA

REVISIONS			
MARK	DATE	DESCRIPTION	BY:

SUBMITTED BY:
CHIEF, ENGINEERING DIVISION DATE

RECOMMENDED BY:
ASSIST. FLOOD CONTROL ENGINEER DATE

APPROVED BY:
FLOOD CONTROL ENGINEER DATE

PROJ. ENGR.	DES. BY:	REV'D BY:	DRAWN BY:
T.R.	S.F.B./D.J.N.	J.B.	S.F.B./D.J.N.

SAN BERNARDINO COUNTY FLOOD CONTROL DISTRICT

FONTANA-RIALTO DRAINAGE SYSTEM

CACTUS BASIN NO. 3

GRADING PLAN
SOUTH HALF OF BASIN

DATE	DEC. , 2007
SCALE	AS SHOWN
FILE NO.	2-104-
SHEET NO.	C-3

CACTUS CHANNEL

STA 82+62.73
MEET EXIST GROUND

STA.83+40.50 ℄ DAM EMBANKMENT
=STA.10+00.00 ℄ WEST RAMP

STA.83+35.29
GRADE TO MEET EXIST

STA.10+38.00 CL WEST RAMP
EL. 1393.13 F.G.

STA.11+40.41 CL WEST RAMP
EL. 1388.38 F/G

STA.16+10.88 END WEST RAMP
EL. 1344.30 F.G.

STA.117+40.94
MEET EXIST GROUND

STA.114+83.34
GRADE TO MEET EXIST

STA.112+27.09 ℄ DAM EMBANKMENT
=STA.10+00.00 ℄ EAST RAMP

MATCH LINE
STA.88+50.00

MATCH LINE
STA.109+50.00

FUTURE BASIN INLETS

TEMP. CONST. EASEMENT

FCD R/W

TYPICAL EMBANKMENT SECTION
SCALE 1"=20'

TYPICAL WEST RAMP SECTION
SCALE 1"=10'

TYPICAL EARTHEN SWALE SECTION
SCALE 1"=10'

SPILLWAY INLET SECTION
SCALE 1"=20'

GRAPHIC SCALE 1"=40'
0 40 80 120

CONSTRUCTION CALLOUTS:

1. INTERCEPTOR V-DITCH PER (CFD)
2. 3" AC PVMT ROAD SECTION PER (CFD)
4. GRAVEL PAD PER (CFD)
5. CONCRETED SPLASH PAD PER (CFD)
6. CONCRETE COLLAR PER APWA SP 380-3
7. BOUNDARY FENCE PER SHT FCD-I
8. CHANNEL FENCE PER SHT FCD-II
12. HEADWALL WING-TYPE PER SBC STD. DRWG. 209
16. SLOPED PROTECTION BARRIER PER APWA SP 360-0
17. 6' WIDE WEST EARTHEN SWALE PER (CFD)
18. 4' WIDE EAST EARTHEN SWALE PER (CFD)
19. CONCRETE BULKHEAD PER RIVERSIDE COUNTY M816 (MODIFIED)
20. WATERMAN (SD) FLAP GATES

CONSTRUCTION NOTES:

(3) CONSTRUCT EAST AND WEST EMBANKMENTS FOR NORTH HALF OF BASIN NO. 3 PER PLAN ON SHEET C-4 ; PROFILE ON SHEETS P-1 & P-3, SECTIONS ON SHEETS X-1 TO X-5 & X-16 TO X-20, AND SURVEY CONTROL DATA ON SHEET G-4

(7) CONSTRUCT EAST MAINTENANCE ACCESS RAMP FOR BASIN NO. 3 PER PLAN ON SHEETS C3 & C4, PROFILE ON SHEET P-3, TYPICAL SECTION ON SHEET C-3, AND SURVEY CONTROL DATA ON SHEETS G-3 & G-4.

(8) CONSTRUCT WEST MAINTENANCE ACCESS RAMP FOR BASIN NO. 3 PER PLAN ON SHEETS C3 & C-4, PROFILE ON SHEET P-1, TYPICAL SECTION ON SHEET C-4, AND SURVEY CONTROL DATA ON SHEETS G-3 & G-4.

(15) CONSTRUCT WEST AND EAST ACCESS ROAD PER PLAN, TYPICAL SECTIONS ON SHEETS C-2 TO C-4, AND SURVEY CONTROL DATA ON SHEETS G-2 TO G-4.

(22) PROTECT IN PLACE EXISTING BOUNDARY CHAIN LINK FENCE

(35) PROTECT IN PLACE EXISTING BLOCK WALL

(38) BREAK AND REPLACE EXISTING 24" RCP PER PLAN, PROFILE ON SHEET SD-2, SECTION ON SHEET SD-2 AND SURVEY CONTROL DATA ON SHEET G-4.

(40) CONSTRUCT APPROX. 159 LINEAR-FEET OF 2 -120" RCP BASIN INLET PER PLAN, PROFILE ON SHEETS SD-6 & SD-7 AND DETAILS ON SHEETS SD-6 & SD-7 (D-LOAD PER PROFILE)

(41) CONSTRUCT 2 -120"" RCP ENCASEMENT PER DETAIL ON SHEET SD-7

(42) CONSTRUCT HEADWALL AND WINGWALLS FOR 2 -120" RCP OUTLET PER PLAN, PROFILE ON SHEET SD-6 & SD-7, DETAILS ON SHEET SD-6 & SD-7 AND STRUCTURAL DETAILS ON SHEETS S-8 & S-9 PER CALTRANS STD. DETAIL D90A

(44) BREAK EXISTING 66" SRMP AT NORTH EMBANKMENT OF BASIN NO. 3 TO BE INLET TO BASIN NO. 4

MATERIAL ZONES:

ZONE (1) MIXED, BORROW FROM BASIN EXCAVATION
ZONE (2) CLASS 2 AGGREGATE BASE, 6" DEEP
ZONE (3) 3" AC PAVEMENT (ON 6" OF ZONE 2, 95% RELATIVE COMPACTION)
ZONE (4) CONCRETED ROCK SLOPE PROTECTION (RSP). 1/4 TON, METHOD 'A' PLACEMENT
ZONE (5) CONCRETED ROCK SPLASH PAD, FACING CLASS, METHOD 'A' PLACEMENT
ZONE (7) 1/2 TON UNGROUTED ROCK RIP-RAP, THICKNESS = 3.5' MIN., METHOD 'A' PLACEMENT
ZONE (9) GRAVEL PAD ON BASIN FLOOR ADJACENT TO RAMPS PER (CFD)
ZONE (10) 1/2 TON CONCRETE RIPRAP (T=4.0') WITH UPPER 6" TO 9" OF TOP LAYER EXPOSED, TYPE 'B' PLACEMENT WITH 1.25' THICK ROCK BACKING NO. 2 AND TYPE 'A' ROCK SLOPE PROTECTION FABRIC PER CALTRANS STD. SPEC. SECTION 72
EXCAVATION

REGISTERED PROFESSIONAL ENGINEER
JAMES PATRICK BORCUK
No. 41807
Exp. 3/31/05
CIVIL
STATE OF CALIFORNIA

SAN BERNARDINO COUNTY FLOOD CONTROL DISTRICT 1939 CALIFORNIA

REVISIONS			
MARK	DATE	DESCRIPTION	BY:

SUBMITTED BY:
CHIEF, ENGINEERING DIVISION DATE
RECOMMENDED BY:
ASSIST. FLOOD CONTROL ENGINEER DATE
APPROVED BY:
FLOOD CONTROL ENGINEER DATE

PROJ. ENGR.	DES. BY:	REV'D BY:	DRAWN BY:
T.R.	S.F.B./D.J.N.	J.B.	S.F.B./D.J.N.

SAN BERNARDINO COUNTY FLOOD CONTROL DISTRICT

FONTANA-RIALTO DRAINAGE SYSTEM

CACTUS BASIN NO. 3

GRADING PLAN
NORTH HALF OF BASIN

DATE DEC. , 2007
SCALE AS SHOWN
FILE NO. 2-104-
SHEET NO. C-4

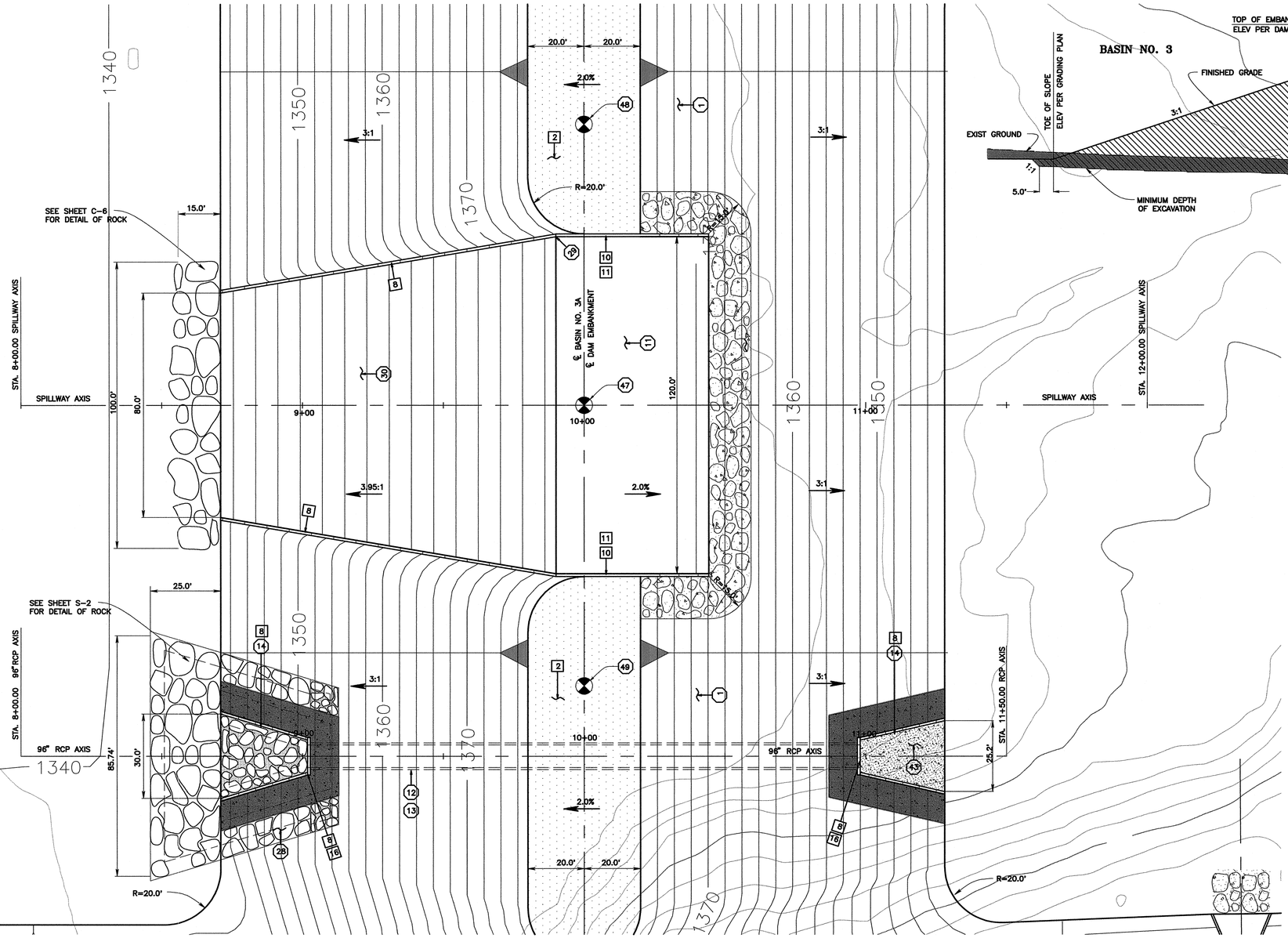

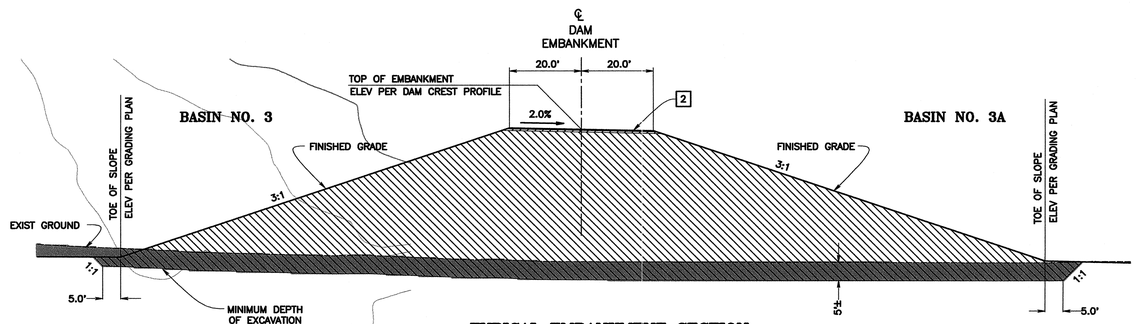

TYPICAL EMBANKMENT SECTION

SCALE 1"=20'

EXCAVATION

CONSTRUCTION CALLOUTS:

- 2 3" AC PVMT ROAD SECTION PER (CCTD)
- 5 CONCRETED SPLASH PAD PER (CCTD)
- 8 CHANNEL FENCE PER SHT FCD-II
- 10 WALK GATE PER SHT FCD-II
- 11 SPILLWAY ACCESS LADDER PER SHT S-7
- 16 SLOPED PROTECTION BARRIER PER APWA SP 360-0

CONSTRUCTION NOTES:

(1) CONSTRUCT SOUTH EMBANKMENT FOR BASIN NO. 3 PER PLAN ON SHEETS C-2 & C3 , PROFILE ON SHEETS P-2 &: P-4, SECTIONS ON SHEETS X-11 TO X-13 & X-23 TO X-25 AND SURVEY CONTROL DATA ON SHEETS G-2 & G-3

(11) CONSTRUCT REINFORCED CONCRETE SPILLWAY PER PLAN ON SHEETS C-2, C-3, C-5 & C-6, PROFILE ON SHEETS C-5, DETAILS ON SHEETS C-6, C-7 & S-5, AND SURVEY CONTROL DATA ON SHEETS G-2, G-3 & G-5.

(12) CONSTRUCT APPROX. 197 LINEAR FEET OF 96" RCP OUTLET BASIN DRAIN PER PLAN C-2, C-3, C-5 & S-5, PROFILE ON SHEET S-2 AND DETAILS ON SHEETS S-2 & S-3 (D-LOAD PER PROFILE)

(13) CONSTRUCT 96" RCP ENCASEMENT PER DETAIL ON SHEET S-4

(14) CONSTRUCT HEADWALL AND WINGWALLS FOR 96" RCP OUTLET PER PLAN ON SHEETS C-2, C-3, C-5 & S-2, PROFILE ON SHEET S-2, DETAILS ON SHEET S-2 & S-3 AND STRUCTURAL DETAILS ON SHEETS S-8 & S-9 PER CALTRANS STD. DETAIL D90A

(28) CONSTRUCT ROCK CUT-OFF WALLS AROUND THE OUTSIDE PERIMETER OF ROCK RIP RAP AREAS AS FOLLOWS:
THE OUTSIDE PERIMETER OF 1/2 TON UNGROUTED ROCK RIP RAP AREAS SHALL BE 5' DEEP AND 5' WIDE
THE OUTSIDE PERIMETER OF 1/4 TON GROUTED ROCK RIP RAP SHALL BE 5' DEEP AND 3' WIDE
THE OUTSIDE PERIMETER OF GROUTED FACING ROCK SHALL BE 3' WIDE AND 3' DEEP

(29) CONSTRUCT CONCRETE CUT-OFF WALLS PER PLAN ON SHEETS C-2, C-3, C-5 & C-6 AND DETAILS ON SHEET S-3 & S-6

(30) CONSTRUCT SPILLWAY SUBDRAIN SYSTEM PER PLAN ON SHEET C-6, SECTIONS & DETAILS ON SHEETS C-6 & C-7.

(43) CONSTRUCT 10" THICK REINFORCED CONCRETE FLOATER SLAB PER PLAN AND DETAILS ON SHEET S-3

(47) ESTABLISH SURVEY MONUMENT ALONG SPILLWAY EMBANKMENT AT STA.100+00.00 ℄ DAM EMBANKMENT/STA. 10+00.00 ℄ SPILLWAY PER PLAN ON SHEET C5.

(48) ESTABLISH SURVEY MONUMENT ALONG SPILLWAY EMBANKMENT AT STA. 99+00.00 ℄ DAM EMBANKMENT PER PLAN ON SHEET C5.

(49) ESTABLISH SURVEY MONUMENT ALONG SPILLWAY EMBANKMENT AT STA.101+00.00 ℄ DAM EMBANKMENT PER PLAN ON SHEET C5.

MATERIAL ZONES:

- ZONE (1) MIXED, BORROW FROM BASIN EXCAVATION
- ZONE (2) CLASS 2 AGGREGATE BASE, 6" DEEP
- ZONE (3) 3" AC PAVEMENT (ON 6" OF ZONE 2, 95% RELATIVE COMPACTION)
- ZONE (4) CONCRETED ROCK SLOPE PROTECTION (RSP). 1/4 TON, METHOD 'B' PLACEMENT
- ZONE (6) 1/4 TON GROUTED ROCK RIP-RAP, THICKNESS = 3' MIN., DEPTH OF GROUT PENETRATION =1.25', METHOD 'A' PLACEMENT
- ZONE (7) 1/2 TON UNGROUTED ROCK RIP-RAP, THICKNESS = 3.5' MIN., METHOD 'A' PLACEMENT
- ZONE (8) CONCRETED FACING ROCK, THICKNESS = 1.5' MIN., DEPTH OF GROUT PENETRATION =.75', METHOD 'A' PLACEMENT

SURVEY MONUMENTS GRID COORDINATES				
	NORTH	EAST	ELEVATION	DESCRIPTION
⊗	1,867,609.72	6,747,224.59	1370.80 FG	STA.100+00.00 ℄ DAM EMBANKMENT = STA. 10+00.00 SPILLWAY AXIS
⊗	1,867,609.72	6,747,124.59	1377.60 FG	STA. 99+00.00 ℄ DAM EMBANKMENT
⊗	1,867,609.72	6,747,324.59	1377.60 FG	STA.101+00.00 ℄ DAM EMBANKMENT

N

GRAPHIC SCALE 1"=20'

0 20 40 60

REGISTERED PROFESSIONAL ENGINEER
JAMES PATRICK BURCUK
No. 41807
Exp. 3/31/08
CIVIL
STATE OF CALIFORNIA

SAN BERNARDINO COUNTY FLOOD CONTROL DISTRICT 1939 CALIFORNIA

REVISIONS			
MARK	DATE	DESCRIPTION	BY:

SUBMITTED BY:

CHIEF, ENGINEERING DIVISION DATE

RECOMMENDED BY:

ASSIST. FLOOD CONTROL ENGINEER DATE

APPROVED BY:

FLOOD CONTROL ENGINEER DATE

PROJ. ENGR.	DES. BY:	REV'D BY:	DRAWN BY:
T.B.	S.F.B./D.J.N.	J.B.	S.F.B./D.J.N.

SAN BERNARDINO COUNTY FLOOD CONTROL DISTRICT

FONTANA-RIALTO DRAINAGE SYSTEM

CACTUS BASIN NO. 3

GRADING PLAN
SPILLWAY AND 96"RCP
BASIN OUTLET DRAIN

DATE	SCALE	FILE NO.	SHEET NO.
DEC. , 2007	AS SHOWN	2-104-	C-5

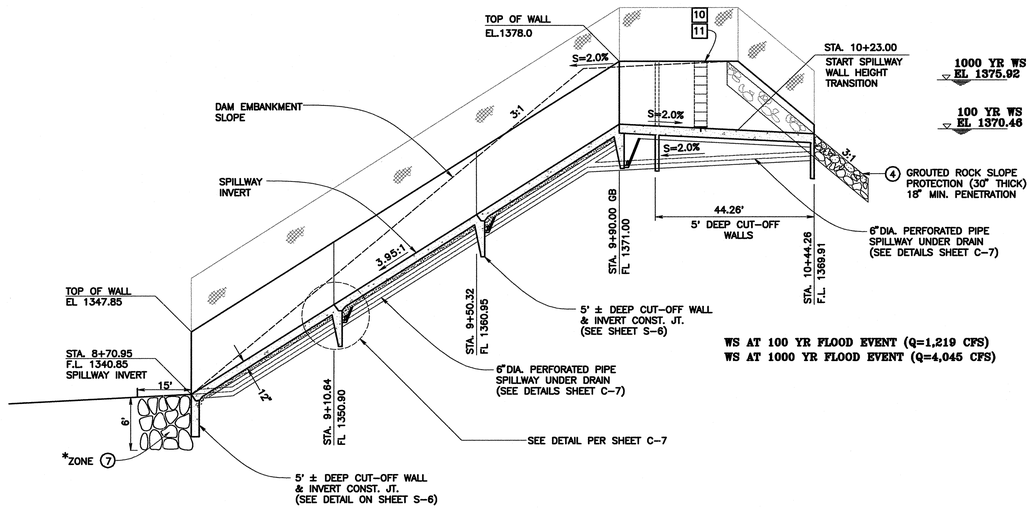

A SPILLWAY UNDERDRAIN PROFILE

HORIZONTAL SCALE 1" = 20'
VERTICAL SCALE 1" = 8'

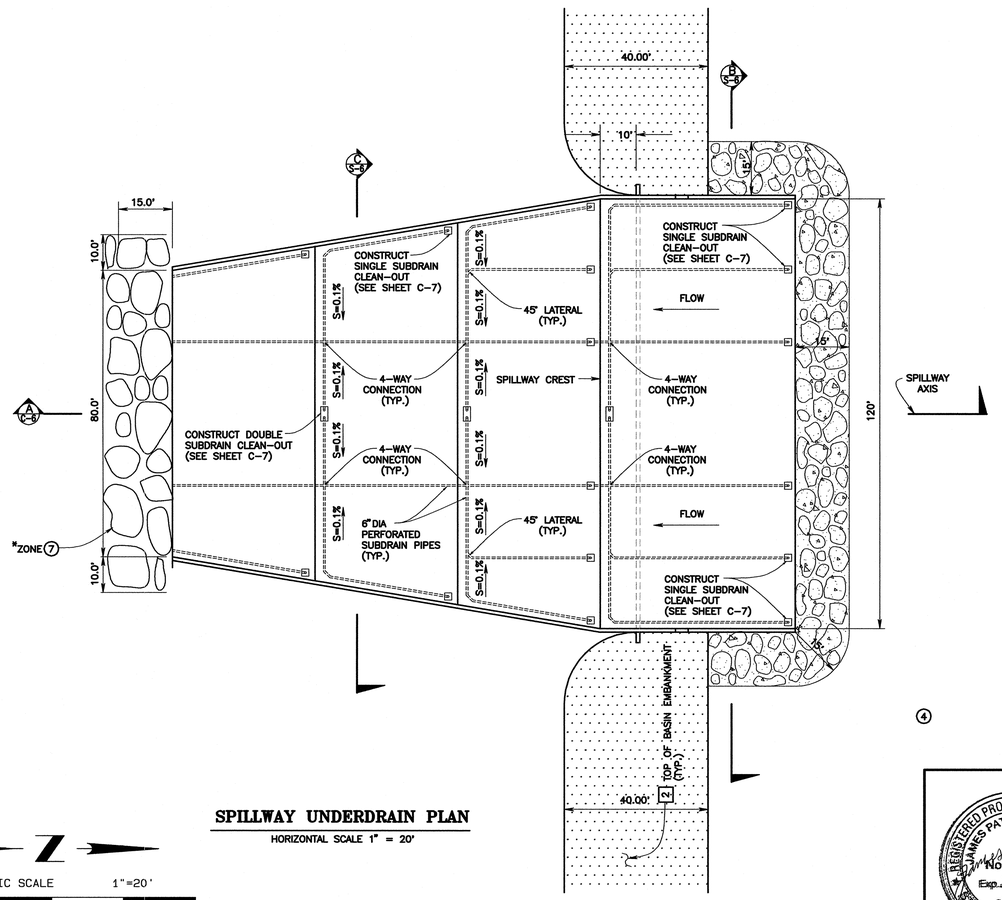

SPILLWAY UNDERDRAIN PLAN

HORIZONTAL SCALE 1" = 20'

GRAPHIC SCALE 1"=20'
0 20 40 60

NOTES:

1. DRAIN MATERIAL SHOULD MEET THE REQUIREMENT FOR CONCRETE AGGREGATES PRESENTED IN CALTRANS SPEC. SECTION 90 .
2. PERFORATED DRAIN PIPE EMBEDDED IN THE DRAIN MATERIAL SHOULD HAVE SLOTS LIMITED TO 3/8"MAX. IN WIDTH OR CIRCULAR PERFORATIONS WITH A DIAMETER ABOUT 1/2" MAX.
3. CLEAN-OUTS SHOULD BE PROVIDED AT THE ENDS OF ALL SUBSURFACES DRAINS DRAIN MATERIALS SHOULD BE MOISTENED THROUGHLY AND COMPACTED TO A RELATIVE DENSITY OF AT LEAST 75 PERCENT (BASED ON ASTM METHODS D 4253 AND D 4254)

CONSTRUCTION CALLOUTS:

- [2] 3" AC PVMT ROAD SECTION PER
- [8] CHANNEL FENCE PER SHT FCD-II
- [10] WALK GATE PER SHT FCD-II
- [11] SPILLWAY ACCESS LADDER PER SHT S-7

CONSTRUCTION NOTES:

- (11) CONSTRUCT REINFORCED CONCRETE SPILLWAY PER PLAN ON SHEETS C-2, C-3, C-5 & C-6, PROFILE ON SHEETS C-5, DETAILS ON SHEETS C-6, C-7 & S-5 AND SURVEY CONTROL DATA ON SHEETS G-2, G-3 & G-5
- (29) CONSTRUCT CONCRETE CUT-OFF WALLS PER PLAN ON SHEET C-6 AND DETAILS ON SHEETS S-3, S-6
- (30) CONSTRUCT SPILLWAY UNDERDRAIN SYSTEM PER PLAN ON SHEET C-6, SECTIONS & DETAILS ON SHEETS C-6 & C-7

MATERIAL ZONES:

ZONE (1) MIXED, BORROW FROM BASIN EXCAVATION

SIZE	PERCENT PASSING
2.0"	100
1.5"	73 - 100
1.0"	65 - 92
# 4	37 - 64
#10	25 - 52
#20	15 - 37
#40	9 - 25
#200	> 8

ZONE (4) CONCRETED ROCK SLOPE PROTECTION (RSP). 1/4 TON, METHOD 'B' PLACEMENT

*ZONE (7) MODIFIED 1/2 TON UNGROUTED ROCK RIP-RAP, THICKNESS = 6' MIN., METHOD 'A' PLACEMENT

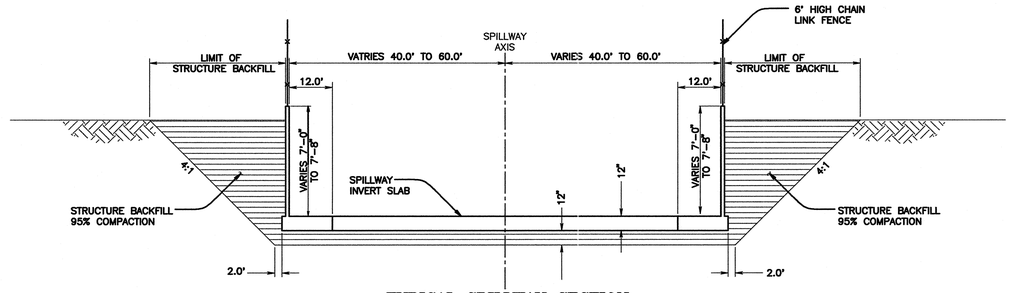

C TYPICAL SPILLWAY SECTION

STA. 8+70.95 TO STA. 10+00.00
HORIZONTAL SCALE 1" = 20'
VERTICAL SCALE 1" = 5'

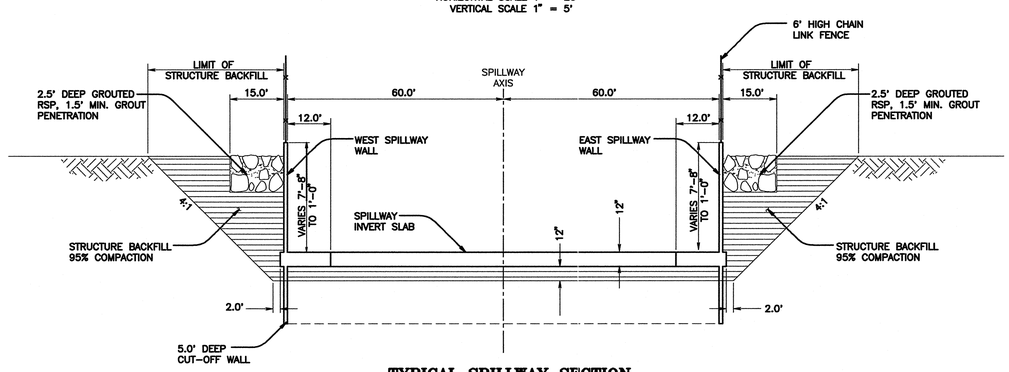

B TYPICAL SPILLWAY SECTION

STA. 10+23.00 TO STA. 10+44.26
HORIZONTAL SCALE 1" = 20'
VERTICAL SCALE 1" = 5'

4

REGISTERED PROFESSIONAL ENGINEER
JAMES PATRICK BORCUK
No. 41807
Exp. 3/31/09
CIVIL
STATE OF CALIFORNIA

SAN BERNARDINO COUNTY FLOOD CONTROL DISTRICT
1939
CALIFORNIA

REVISIONS			
MARK	DATE	DESCRIPTION	BY:

SUBMITTED BY:
CHIEF, ENGINEERING DIVISION DATE

RECOMMENDED BY:
ASSIST. FLOOD CONTROL ENGINEER DATE

APPROVED BY:
FLOOD CONTROL ENGINEER DATE

PROJ. ENGR.	DES. BY:	REV'D BY:	DRAWN BY:
T.R.	S.F.B./D.J.N.	J.B.	S.F.B./D.J.N.

SAN BERNARDINO COUNTY
FLOOD CONTROL DISTRICT

FONTANA-RIALTO DRAINAGE SYSTEM

CACTUS BASINS NO. 3

BASIN OUTLET SPILLWAY
UNDER DRAIN PLAN,
PROFILE & SECTIONS

DATE	SCALE	FILE NO.	SHEET NO.
DEC. , 2007	AS SHOWN	2-104-	C-6

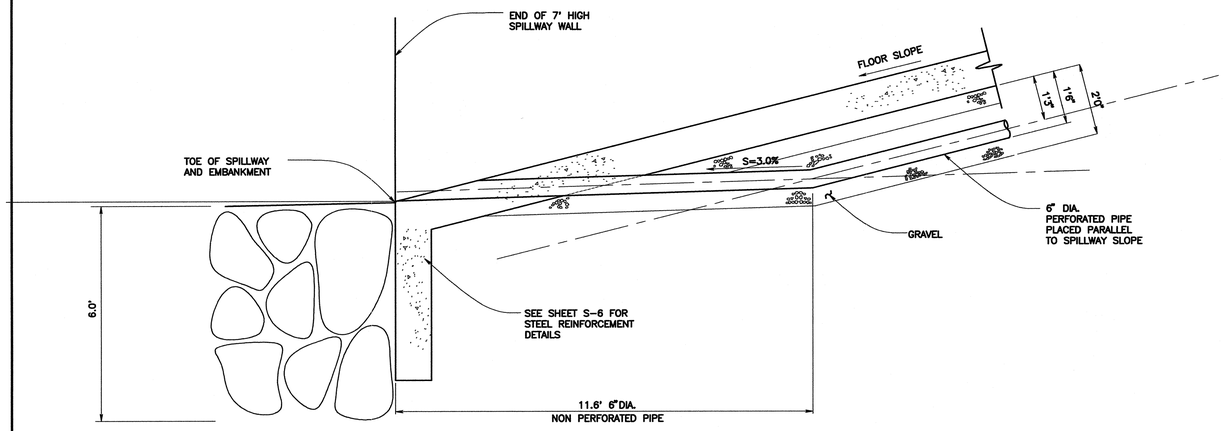

SUBDRAIN CUT-OFF WALL DETAIL

NOT TO SCALE

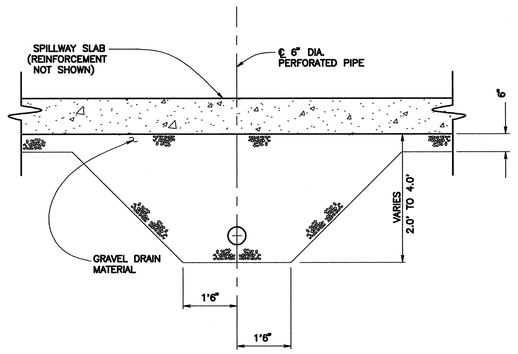

TYPICAL SUBDRAIN PIPE DETAIL

NOT TO SCALE

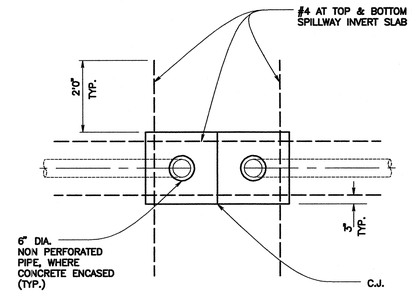

REINFORCEMENT DETAIL

NOT TO SCALE

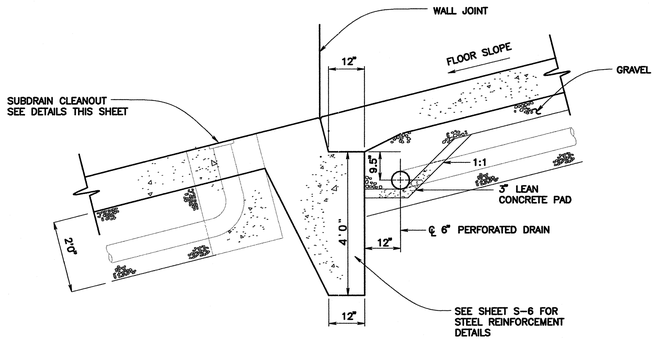

CUT-OFF WALL AND FLOOR JOINT DETAIL

NOT TO SCALE

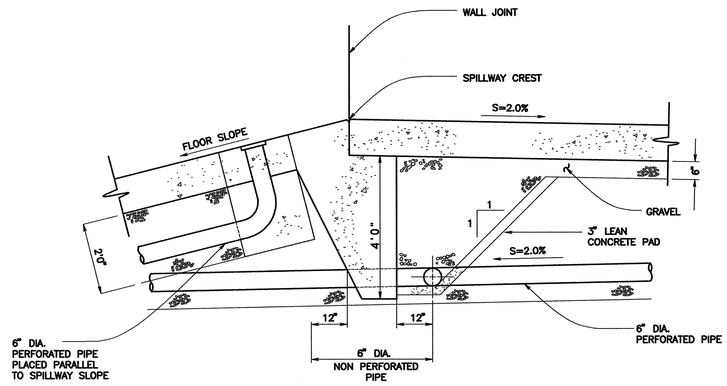

SUBDRAIN CUT-OFF WALL DETAIL @ STA. 9+90.00

NOT TO SCALE

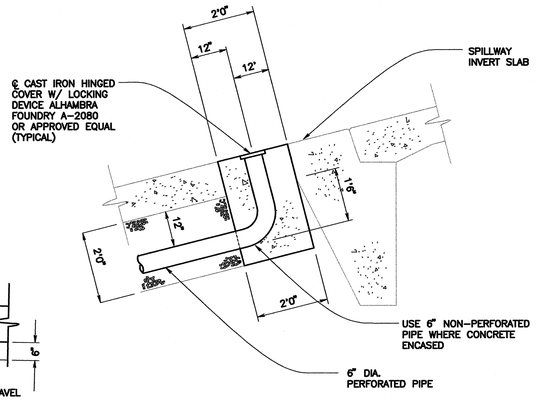

C — C

SECTION

NOT TO SCALE

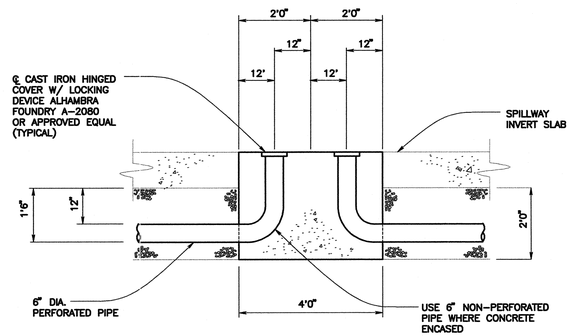

E — E

SECTION

NOT TO SCALE

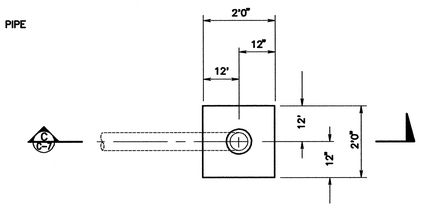

C — C

PLAN

NOT TO SCALE

SINGLE CLEAN-OUT DETAIL

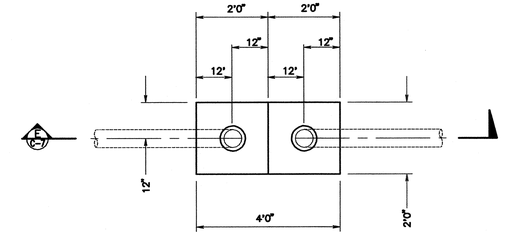

E — E

PLAN

NOT TO SCALE

DOUBLE CLEAN-OUT DETAIL

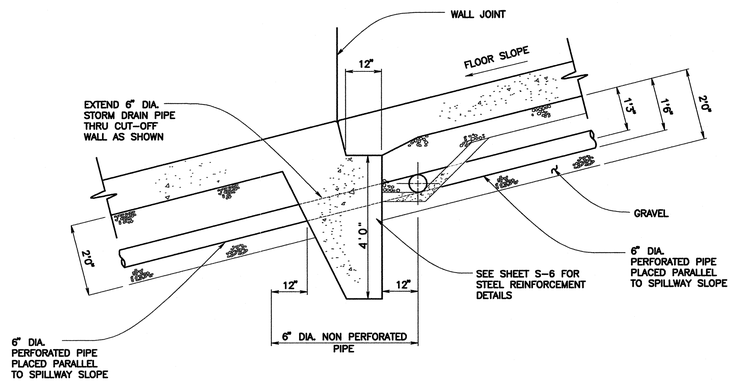

SUBDRAIN CUT-OFF WALL DETAIL

NOT TO SCALE

MISC. SUBDRAIN DETAILS

NOT TO SCALE

REGISTERED PROFESSIONAL ENGINEER — JAMES PATRICK BOSCUK — No. 41807 — Exp. 3/31/08 — CIVIL — STATE OF CALIFORNIA

SAN BERNARDINO COUNTY FLOOD CONTROL DISTRICT 1939 CALIFORNIA

REVISIONS			
MARK	DATE	DESCRIPTION	BY:

SUBMITTED BY: _____ CHIEF, ENGINEERING DIVISION DATE

RECOMMENDED BY: _____ ASSIST. FLOOD CONTROL ENGINEER DATE

APPROVED BY: _____ FLOOD CONTROL ENGINEER DATE

PROJ. ENGR.	DES. BY:	REV'D BY:	DRAWN BY:
T.R.	S.F.B./D.J.N.	J.B.	S.F.B./D.J.N.

SAN BERNARDINO COUNTY FLOOD CONTROL DISTRICT

FONTANA-RIALTO DRAINAGE SYSTEM

CACTUS BASINS NO. 3

BASIN OUTLET SPILLWAY UNDERDRAIN PLAN, SECTIONS & DETAILS

DATE	SCALE	FILE NO.	SHEET NO.
DEC. , 2007	AS SHOWN	2-104-	C-7

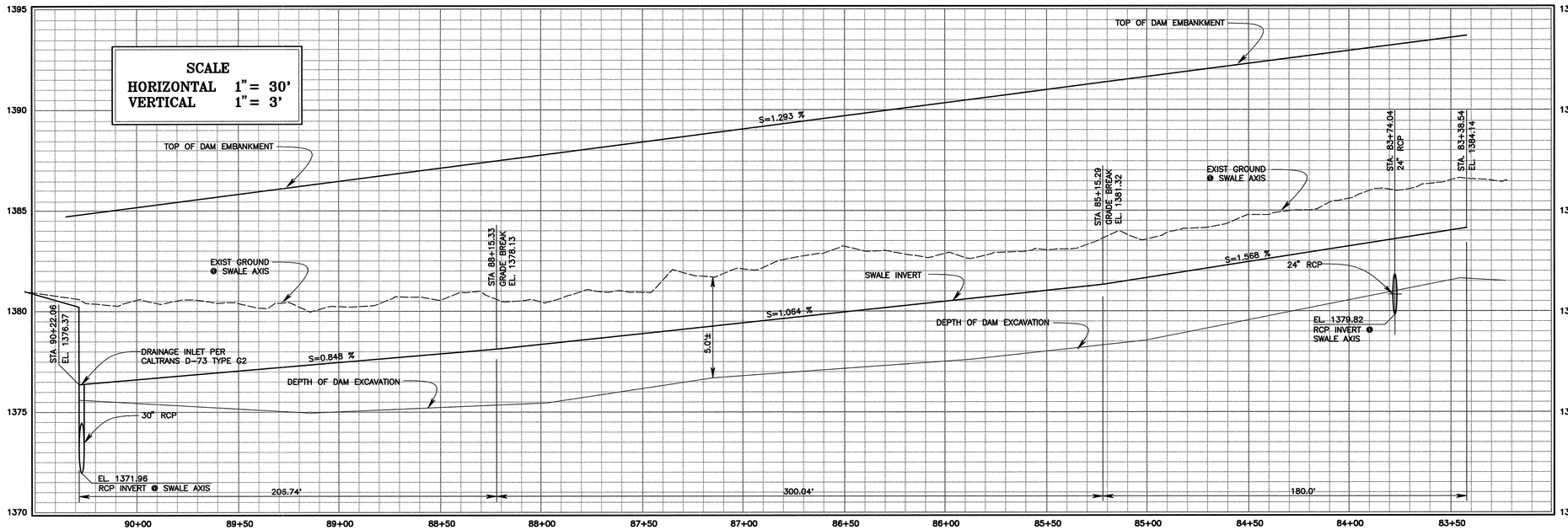

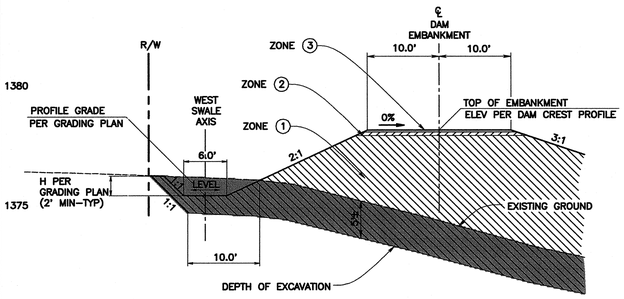

TYPICAL WEST EARTHEN SWALE SECTION

SCALE 1"=10'

PROFILE – WEST EARTHEN SWALE

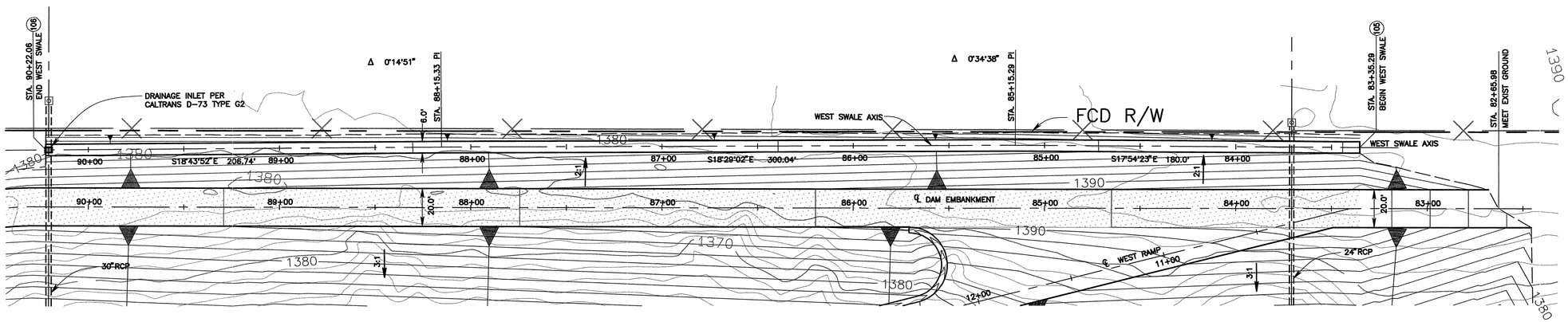

MATERIAL ZONES:

ZONE (1) MIXED, BORROW FROM BASIN EXCAVATION

ZONE (2) CLASS 2 AGGREGATE BASE, 6" DEEP

ZONE (3) 3" AC PAVEMENT (ON 6" OF ZONE 2, 95% RELATIVE COMPACTION)

EXCAVATION

PLAN – WEST EARTHEN SWALE

HORIZONTAL SCALE 1"=30'

0 30 60 90

PROJECT COORDINATES

	NORTH	EAST	ELEVATION	DESCRIPTION
(105)	1,868,773.23	6,746,353.15	1384.14 FG	STA. 83+35.29 ℄ WEST SWALE AXIS BEGIN SWALE CONSTRUCTION
(106)	1,868,121.61	6,746,570.01	1376.37 FG	STA. 90+22.06 ℄ WEST SWALE AXIS END SWALE CONSTRUCTION

REGISTERED PROFESSIONAL ENGINEER JAMES PATRICK BORCUK No. 41807 Exp. 3/31/08 CIVIL STATE OF CALIFORNIA

SAN BERNARDINO COUNTY FLOOD CONTROL DISTRICT 1939 CALIFORNIA

REVISIONS			
MARK	DATE	DESCRIPTION	BY:

SUBMITTED BY: _____ CHIEF, ENGINEERING DIVISION DATE

RECOMMENDED BY: _____ ASSIST. FLOOD CONTROL ENGINEER DATE

APPROVED BY: _____ FLOOD CONTROL ENGINEER DATE

PROJ. ENGR.	DES. BY:	REV'D BY:	DRAWN BY:
T.R.	S.F.B./D.J.N.	J.B.	S.F.B./D.J.N.

SAN BERNARDINO COUNTY FLOOD CONTROL DISTRICT

FONTANA–RIALTO DRAINAGE SYSTEM

CACTUS BASIN NO. 3

PLAN, PROFILE & DETAILS WEST SWALE

DATE	DEC. , 2007
SCALE	AS SHOWN
FILE NO.	2-104-
SHEET NO.	C-8

PROFILE – EAST EARTHEN SWALE

SCALE
HORIZONTAL 1" = 30'
VERTICAL 1" = 3'

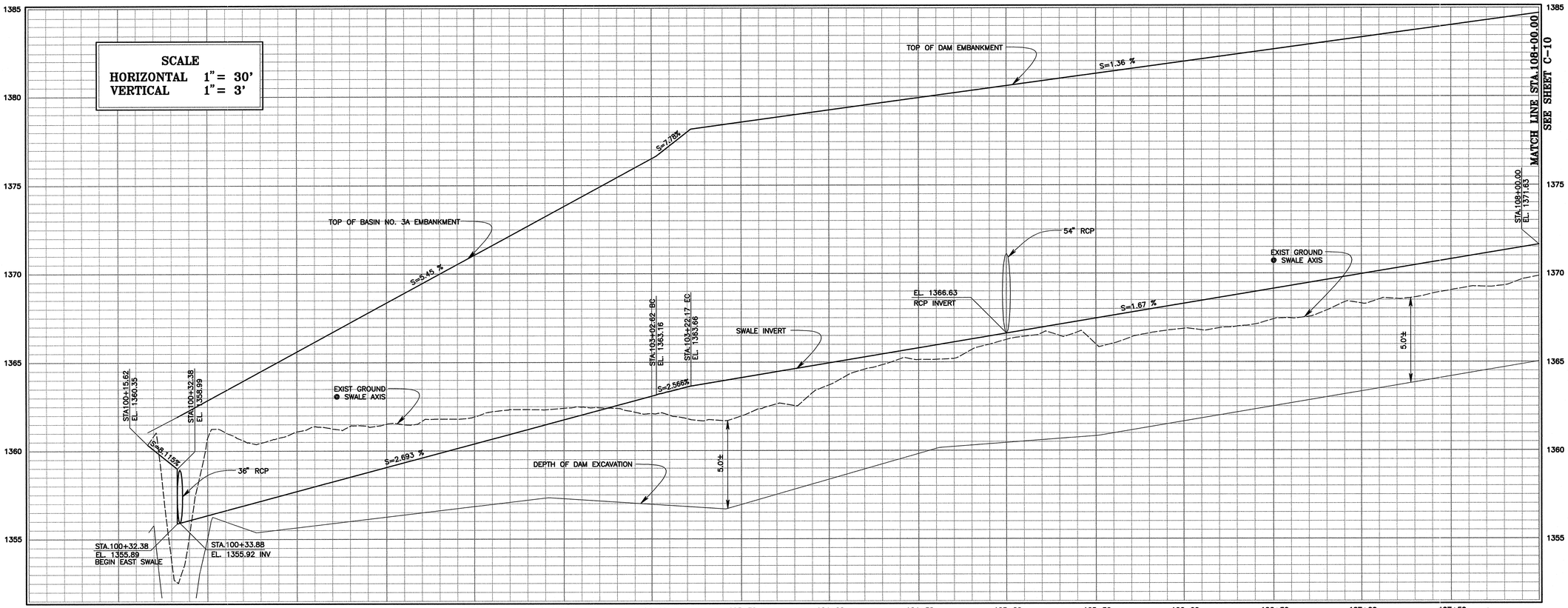

MATERIAL ZONES:

ZONE (1) MIXED, BORROW FROM BASIN EXCAVATION
ZONE (2) CLASS 2 AGGREGATE BASE, 6" DEEP
ZONE (3) 3" AC PAVEMENT (ON 6" OF ZONE 2, 95% RELATIVE COMPACTION)
EXCAVATION

PLAN – EAST EARTHEN SWALE

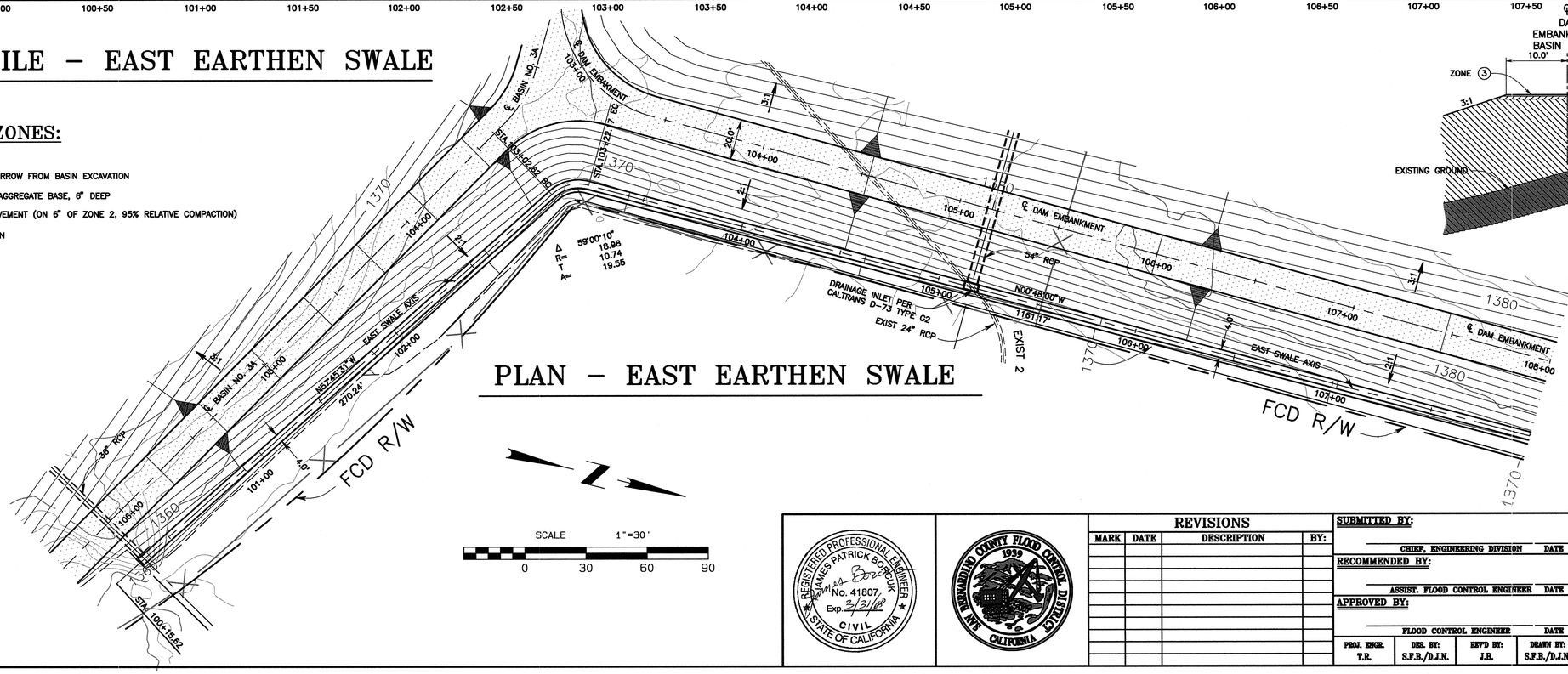

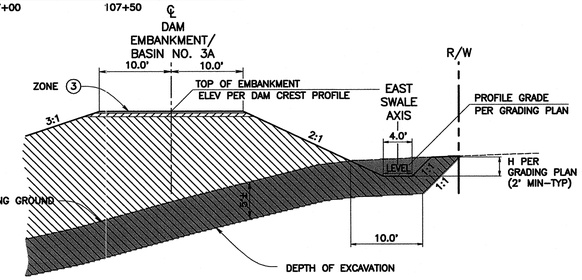

TYPICAL EAST EARTHEN SWALE SECTION

REGISTERED PROFESSIONAL ENGINEER JAMES PATRICK BOWDUK No. 41807 Exp. 2/31/08 CIVIL STATE OF CALIFORNIA

SAN BERNARDINO COUNTY FLOOD CONTROL DISTRICT 1939 CALIFORNIA

REVISIONS			
MARK	DATE	DESCRIPTION	BY:

SUBMITTED BY: _____ CHIEF, ENGINEERING DIVISION DATE

RECOMMENDED BY: _____ ASSIST. FLOOD CONTROL ENGINEER DATE

APPROVED BY: _____ FLOOD CONTROL ENGINEER DATE

PROJ. ENGR.	DES. BY:	REV'D BY:	DRAWN BY:
T.R.	S.F.B./D.J.N.	J.B.	S.F.B./D.J.N.

SAN BERNARDINO COUNTY FLOOD CONTROL DISTRICT

FONTANA–RIALTO DRAINAGE SYSTEM

CACTUS BASIN NO. 3

PLAN, PROFILE & DETAILS EAST SWALE STA.100+15.62–STA.108+00.00

DATE DEC. ,2007
SCALE AS SHOWN
FILE NO. 2-104-
SHEET NO. C-9

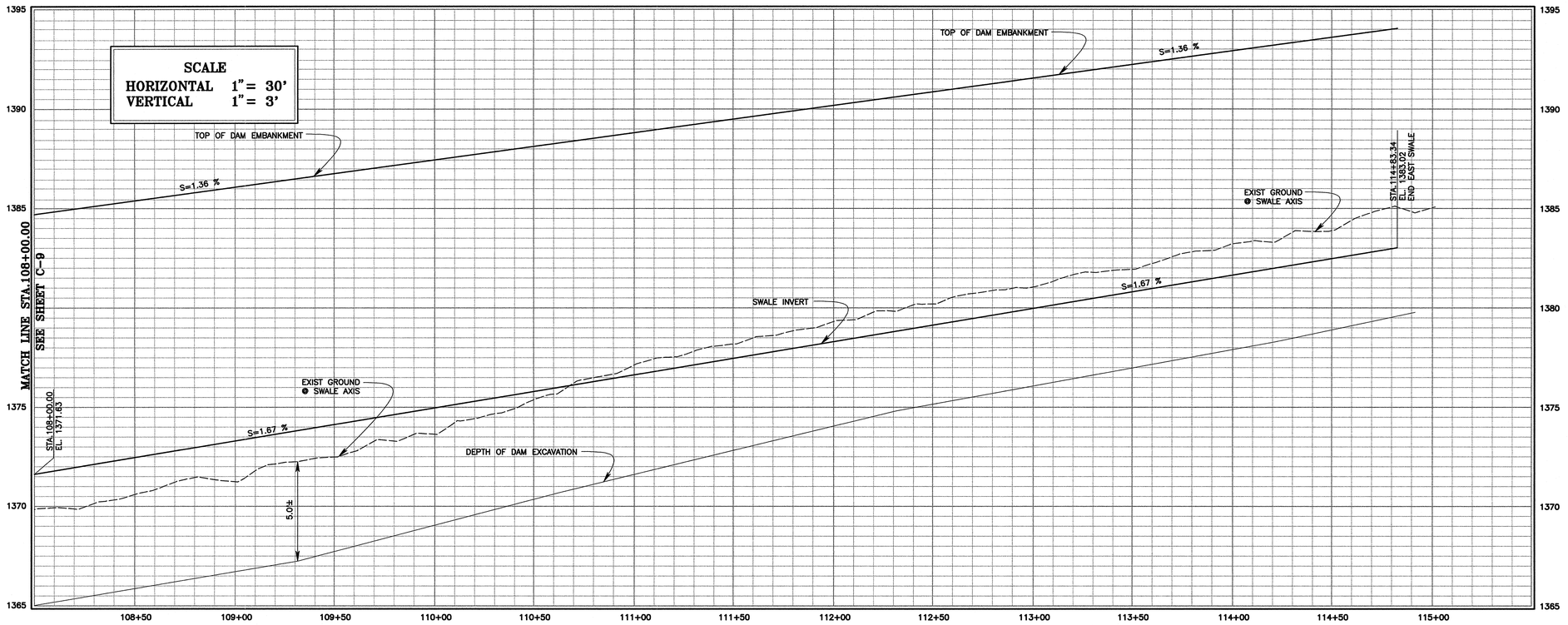

MATERIAL ZONES:

ZONE ① MIXED, BORROW FROM BASIN EXCAVATION

ZONE ② CLASS 2 AGGREGATE BASE, 6" DEEP

ZONE ③ 3" AC PAVEMENT (ON 6" OF ZONE 2, 95% RELATIVE COMPACTION)

EXCAVATION

PROFILE – EAST EARTHEN SWALE

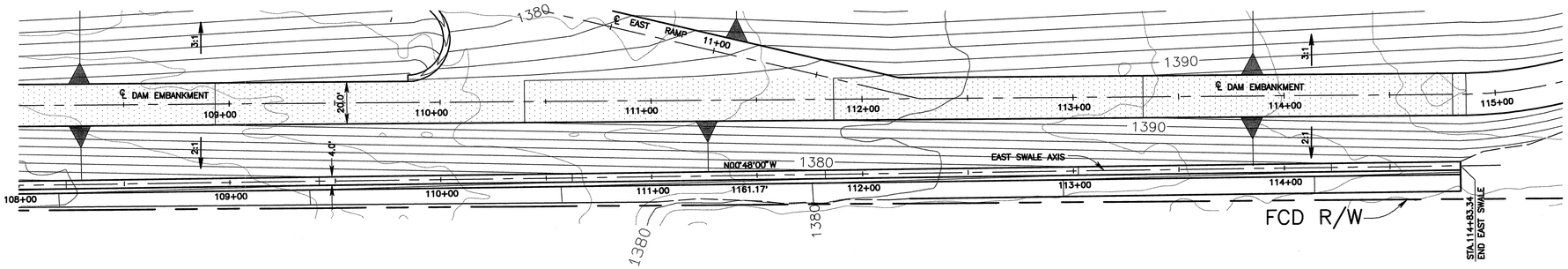

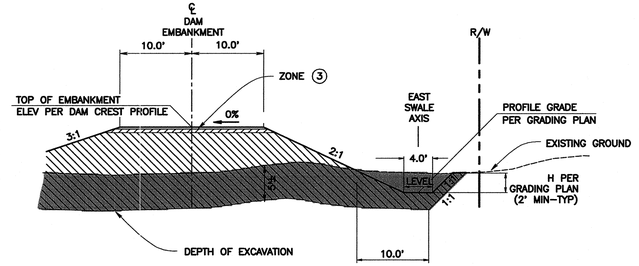

TYPICAL EAST EARTHEN SWALE SECTION

SCALE 1"=10'

PLAN – EAST EARTHEN SWALE

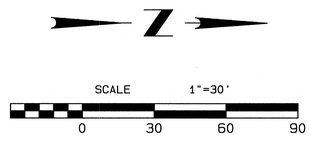

REGISTERED PROFESSIONAL ENGINEER
JAMES PATRICK BOURUK
No. 41807
Exp. 3/31/08
CIVIL
STATE OF CALIFORNIA

SAN BERNARDINO COUNTY FLOOD CONTROL DISTRICT 1939 CALIFORNIA

REVISIONS			
MARK	DATE	DESCRIPTION	BY:

SUBMITTED BY:

CHIEF, ENGINEERING DIVISION DATE

RECOMMENDED BY:

ASSIST. FLOOD CONTROL ENGINEER DATE

APPROVED BY:

FLOOD CONTROL ENGINEER DATE

PROJ. ENGR.	DES. BY:	REV'D BY:	DRAWN BY:
T.R.	S.F.B./D.J.N.	J.B.	S.F.B./D.J.N.

SAN BERNARDINO COUNTY FLOOD CONTROL DISTRICT

FONTANA–RIALTO DRAINAGE SYSTEM

CACTUS BASIN NO. 3

PLAN, PROFILE & DETAILS EAST SWALE

STA.108+00.00–STA.114+83.34

DATE	DEC. , 2007
SCALE	AS SHOWN
FILE NO.	2-104-
SHEET NO.	C-10

PROFILE – SOUTHEAST CONCRETED SWALE

SCALE
HORIZONTAL 1"= 10'
VERTICAL 1"= 1'

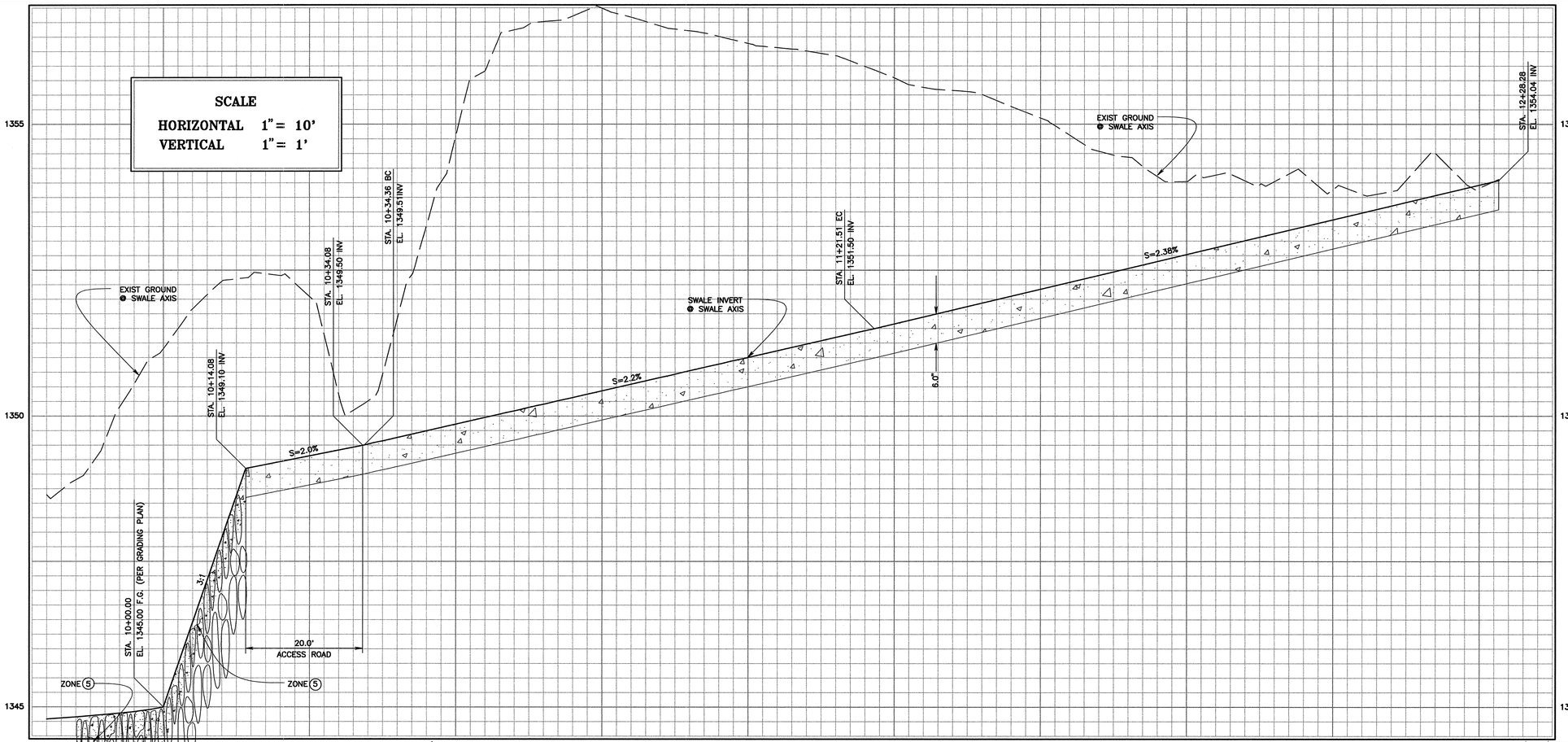

PLAN – SOUTHEAST CONCRETED SWALE

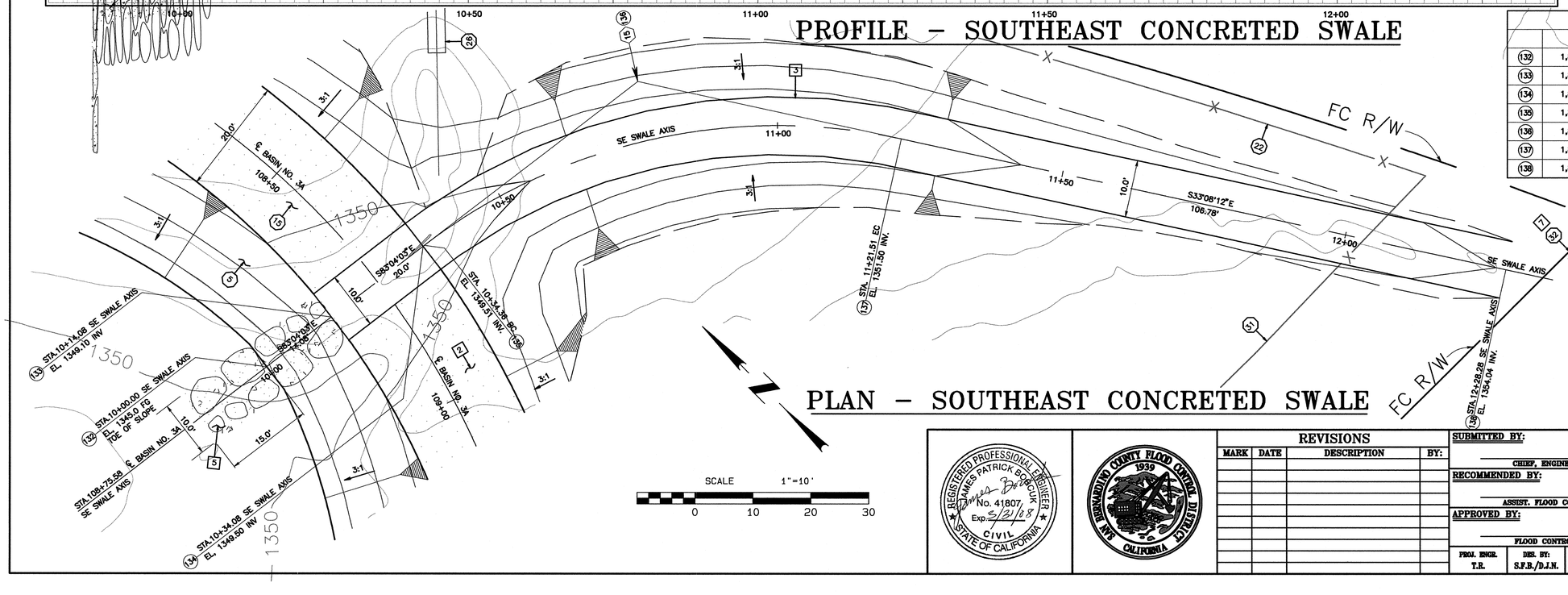

CONSTRUCTION CALLOUTS:

- [2] 3" AC PVMT ROAD SECTION PER (STD)
- [3] 10' WIDE CONCRETE SWALE PER (STD)
- [5] CONCRETED SPLASH PAD PER (STD)
- [7] BOUNDARY FENCE PER SHT FCD-I

CONSTRUCTION NOTES:

(5) CONSTRUCT EAST AND WEST EMBANKMENTS FOR BASIN NO. 3A AND HABITAT RESTORATION AREA, SOUTH OF BASIN NO. 3 PER PLAN ON SHEET C-2, PROFILE ON SHEETS P-4 & P-5, SECTIONS ON SHEETS X-21 TO X-23 & X-26 TO X-30 AND SURVEY CONTROL DATA ON SHEET G-2.

(15) CONSTRUCT WEST AND EAST ACCESS ROAD PER PLAN, TYPICAL SECTIONS ON SHEETS C-2 TO C-4, AND SURVEY CONTROL DATA ON SHEETS G-2 TO G-4.

(22) PROTECT IN PLACE EXISTING BOUNDARY CHAIN LINK FENCE

(26) PROTECT IN PLACE EXISTING 36" CMP

(31) REMOVE EXISTING BOUNDARY FENCE AND GATES FROM BASELINE RD. AT APPROX. STA 114+00 ± TO EAST END AND REPLACE FENCE PER FCD-I TO STA 113+06.81 TO STA 114+00 ±

(32) MOVE BOUNDARY FENCE FROM STA 113+06.81 TO THE EAST 25'± TO THE SOUTH PER FCD-I

MATERIAL ZONES:

ZONE (1) MIXED, BORROW FROM BASIN EXCAVATION
ZONE (2) CLASS 2 AGGREGATE BASE, 6" DEEP
ZONE (3) 3" AC PAVEMENT (ON 6" OF ZONE 2, 93% RELATIVE COMPACTION)
ZONE (5) CONCRETED ROCK SPLASH PAD, FACING CLASS, METHOD 'B' PLACEMENT
EXCAVATION

CURVE DATA				
	Δ	R	T	L
(15)	49°50'50"	100.00	46.56	87.15

PROJECT COORDINATES				
	NORTH	EAST	ELEVATION	DESCRIPTION
(132)	1,867,283.65	6,747,933.20	1345.00 FG	STA. 10+00.00 SE SWALE AXIS
(133)	1,867,281.95	6,747,947.18	1349.10 INV	STA. 10+14.08 SE SWALE AXIS
(134)	1,867,279.54	6,747,967.03	1349.50 INV	STA. 10+34.08 SE SWALE AXIS
(135)	1,867,279.50	6,747,967.30	1349.51 INV	STA. 10+34.36 BC SE SWALE AXIS
(136)	1,867,273.88	6,748,013.52		P.I. OF CURVE NO. 15
(137)	1,867,234.90	6,748,038.97	1351.50 INV	STA. 11+21.51 EC SE SWALE AXIS
(138)	1,867,145.49	6,748,097.34	1354.04 INV	STA. 12+28.28 SE SWALE AXIS

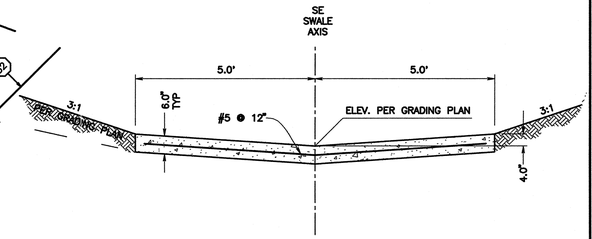

TYPICAL CONCRETE SWALE CROSS-SECTION
SCALE 1/2"=1'

REGISTERED PROFESSIONAL ENGINEER JAMES PATRICK BORDUK No. 41807 Exp. 3/31/08 CIVIL STATE OF CALIFORNIA

SAN BERNARDINO COUNTY FLOOD CONTROL DISTRICT 1939 CALIFORNIA

REVISIONS			
MARK	DATE	DESCRIPTION	BY:

SUBMITTED BY:
CHIEF, ENGINEERING DIVISION DATE
RECOMMENDED BY:
ASSIST. FLOOD CONTROL ENGINEER DATE
APPROVED BY:
FLOOD CONTROL ENGINEER DATE

PROJ. ENGR.	DES. BY:	REV'D BY:	DRAWN BY:
T.R.	S.F.B./D.J.N.	J.B.	S.F.B./D.J.N.

SAN BERNARDINO COUNTY FLOOD CONTROL DISTRICT

FONTANA–RIALTO DRAINAGE SYSTEM

CACTUS BASIN NO. 3

PLAN, PROFILE & DETAILS SOUTHEAST CONCRETED SWALE

DATE	SCALE	FILE NO.	SHEET NO.
DEC. ,2007	AS SHOWN	2-104-	C-11

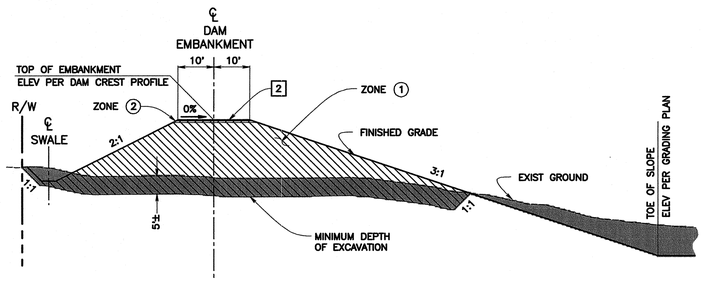

TYPICAL EMBANKMENT SECTION

SCALE 1"=20'

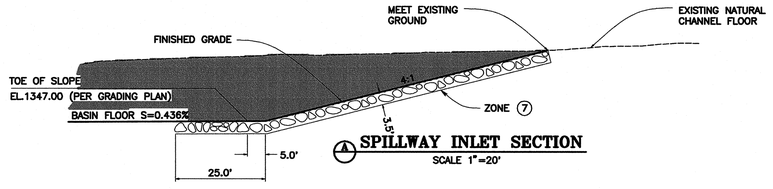

SPILLWAY INLET SECTION

SCALE 1"=20'

NOTES:

1. FOR LEGEND OF SYMBOLS, SEE SHEET I-2
2. FOR GENERAL NOTES, SEE SHEET I-3
3. FOR COMPLETE LIST OF CONSTRUCTION CALLOUTS, SEE SHEET I-3
4. FOA A COMPLETE LIST OF MATERIAL ZONES, SEE SHEET I-3

CONSTRUCTION CALLOUTS:

1. INTERCEPTOR V-DITCH PER (STD)
2. 3" AC PVMT ROAD SECTION PER (STD)
3. 10' WIDE CONCRETE SWALE PER (STD)
4. GRAVEL PAD PER (STD)
5. CONCRETED SPLASH PAD PER (STD)
12. HEADWALL WING-TYPE PER SBC STD. DRWG. 209
16. SLOPED PROTECTION BARRIER PER APWA SP 360-0(STD)
17. 6' WIDE WEST EARTHEN SWALE PER (STD)
18. 4' WIDE EAST EARTHEN SWALE PER (STD)

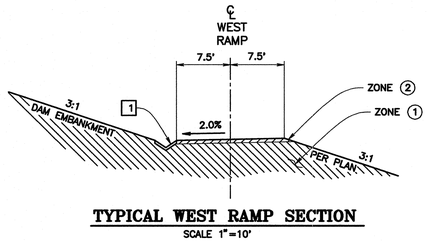

TYPICAL WEST RAMP SECTION

SCALE 1"=10'

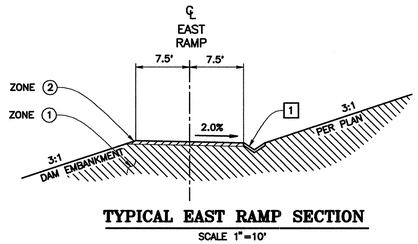

TYPICAL EAST RAMP SECTION

SCALE 1"=10'

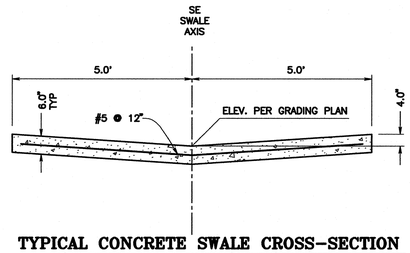

TYPICAL CONCRETE SWALE CROSS-SECTION

SCALE 1/2"=1'

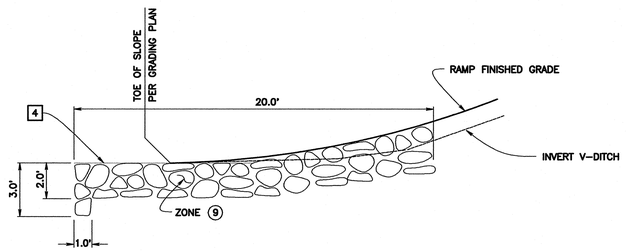

SECTION - GRAVEL PAD ADJACENT RAMPS

SCALE 1"=4'

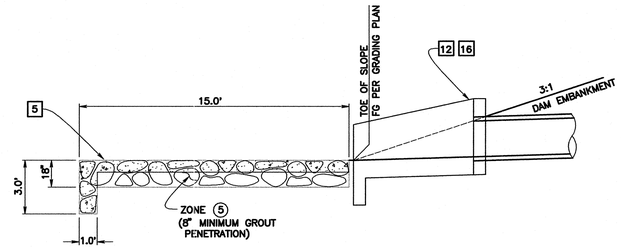

SECTION - CONCRETED SPLASH PAD ADJACENT TO RCP's INLETS

SCALE 1"=4'

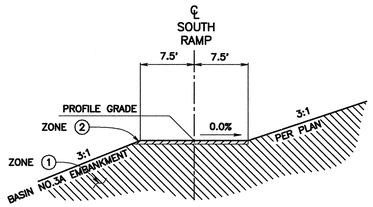

TYPICAL SOUTH RAMP SECTION

SCALE 1"=10'

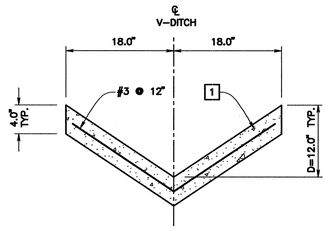

V-DITCH DETAIL

SCALE 1"=1'

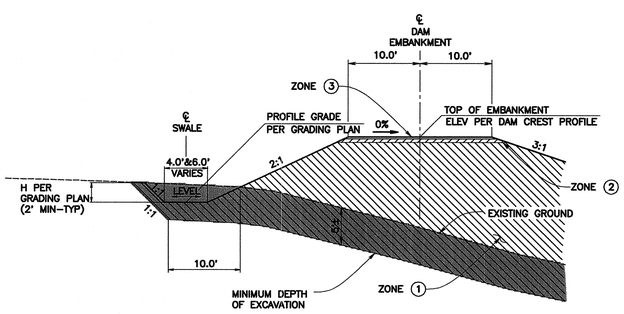

TYPICAL EARTHEN SWALE SECTION

SCALE 1"=10'

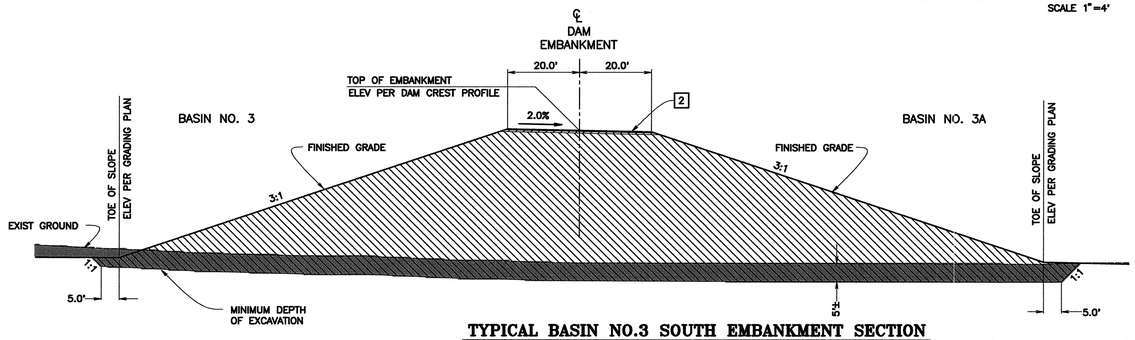

TYPICAL BASIN NO.3 SOUTH EMBANKMENT SECTION

SCALE 1"=20'

REGISTERED PROFESSIONAL ENGINEER
JAMES PATRICK BORDUR
No. 41807
Exp. 3/31/08
CIVIL
STATE OF CALIFORNIA

SAN BERNARDINO COUNTY FLOOD CONTROL DISTRICT 1939 CALIFORNIA

REVISIONS

MARK	DATE	DESCRIPTION	BY:

SUBMITTED BY:

CHIEF, ENGINEERING DIVISION DATE

RECOMMENDED BY:

ASSIST. FLOOD CONTROL ENGINEER DATE

APPROVED BY:

FLOOD CONTROL ENGINEER DATE

PROJ. ENGR.	DES. BY:	REV'D BY:	DRAWN BY:
T.R.	S.F.B./D.J.N.	J.B.	S.F.B./D.J.N.

SAN BERNARDINO COUNTY
FLOOD CONTROL DISTRICT

FONTANA-RIALTO DRAINAGE SYSTEM

CACTUS BASIN NO. 3

TYPICAL DAM AND
CIVIL SECTIONS

DATE	SCALE	FILE NO.	SHEET NO.
DEC. , 2007	AS SHOWN	2-104-	C-12

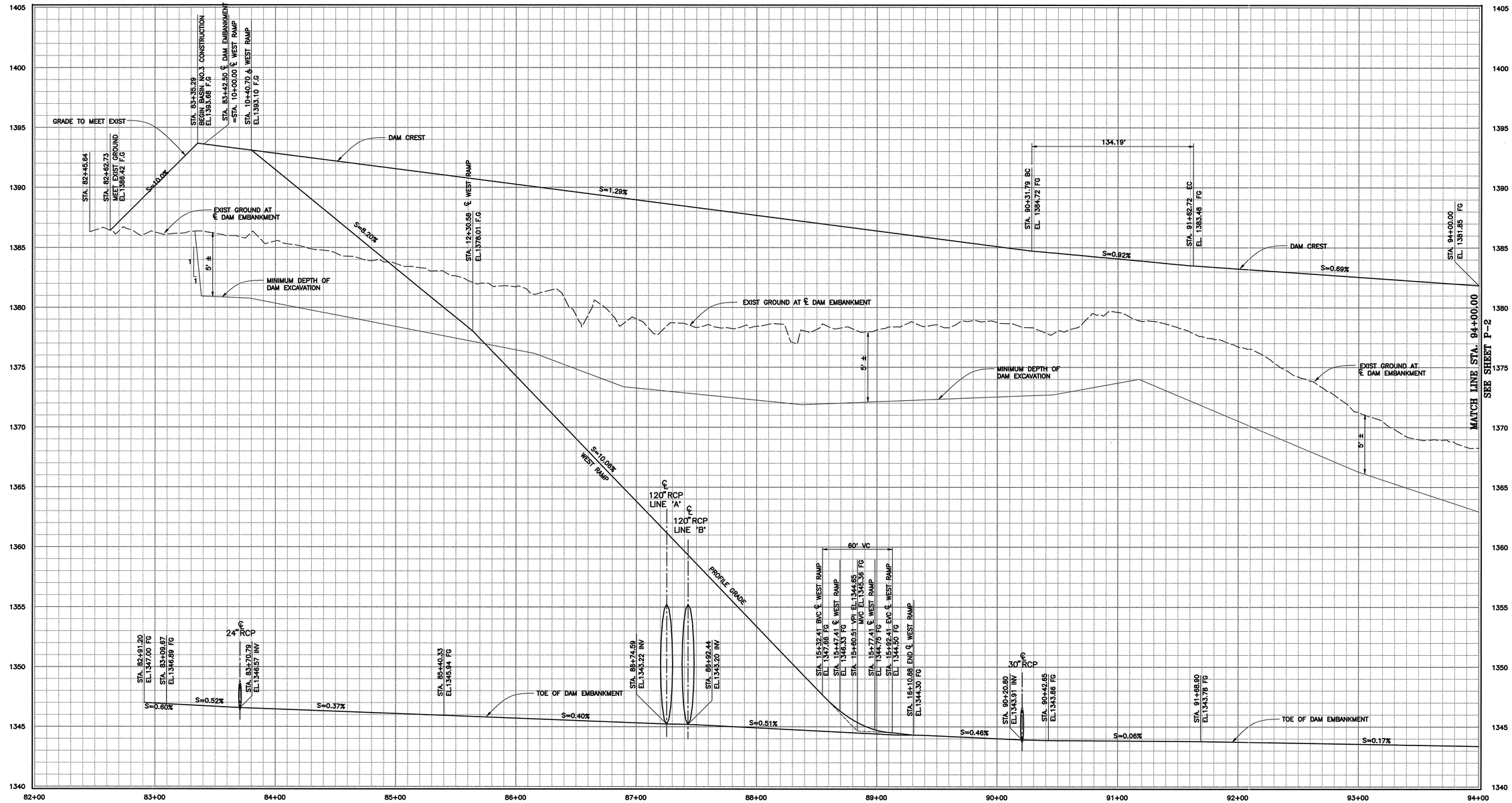

SEE PLAN SHEET C-4

SEE PLAN SHEET C-3

NOTES:

1. DAM CREST PROFILE IS ON THE ℄ DAM EMBANKMENT
2. ELEVATION NOTED ARE PROFILE GRADE ELEVATIONS EXCEPT OTHERWISE NOTED
3. THE ACTUAL STRIPPING DEPTH SHOULD BE ESTABLISHED IN THE FIELD AT THE TIME OF CONSTRUCTION
4. DEPTH OF DAM EXCAVATION SHALL BE ADJUSTED IN THE FIELD BY THE ENGINEER SO THAT ALL LOOSE SOILS SHALL BE REMOVED TO EXPOSE DENSE NATIVE SOILS BELOW THE FILL EMBANKMENT
5. WEST RAMP ELEVATION IS FOR THE CENTERLINE OF RAMP, SEE G-4

HORIZONTAL SCALE 1"=40'

0 40 80 120

VERTICAL SCALE 1"=4'

0 4 8 12

REGISTERED PROFESSIONAL ENGINEER
JAMES PATRICK BORCUK
No. 41807
Exp. 3/31/08
CIVIL
STATE OF CALIFORNIA

SAN BERNARDINO COUNTY FLOOD CONTROL DISTRICT 1939 CALIFORNIA

REVISIONS			
MARK	DATE	DESCRIPTION	BY:

SUBMITTED BY:

CHIEF, ENGINEERING DIVISION DATE

RECOMMENDED BY:

ASSIST. FLOOD CONTROL ENGINEER DATE

APPROVED BY:

FLOOD CONTROL ENGINEER DATE

PROJ. ENGR.	DES. BY:	REV'D BY:	DRAWN BY:
T.R.	S.F.B./D.J.N.	J.B.	S.F.B./D.J.N.

SAN BERNARDINO COUNTY FLOOD CONTROL DISTRICT

FONTANA-RIALTO DRAINAGE SYSTEM

CACTUS BASIN NO. 3

DAM CREST PROFILE
STA.82+45.64-STA.94+00.00

DATE	DEC. , 2007
SCALE	AS SHOWN
FILE NO.	2-104-
SHEET NO.	P-1

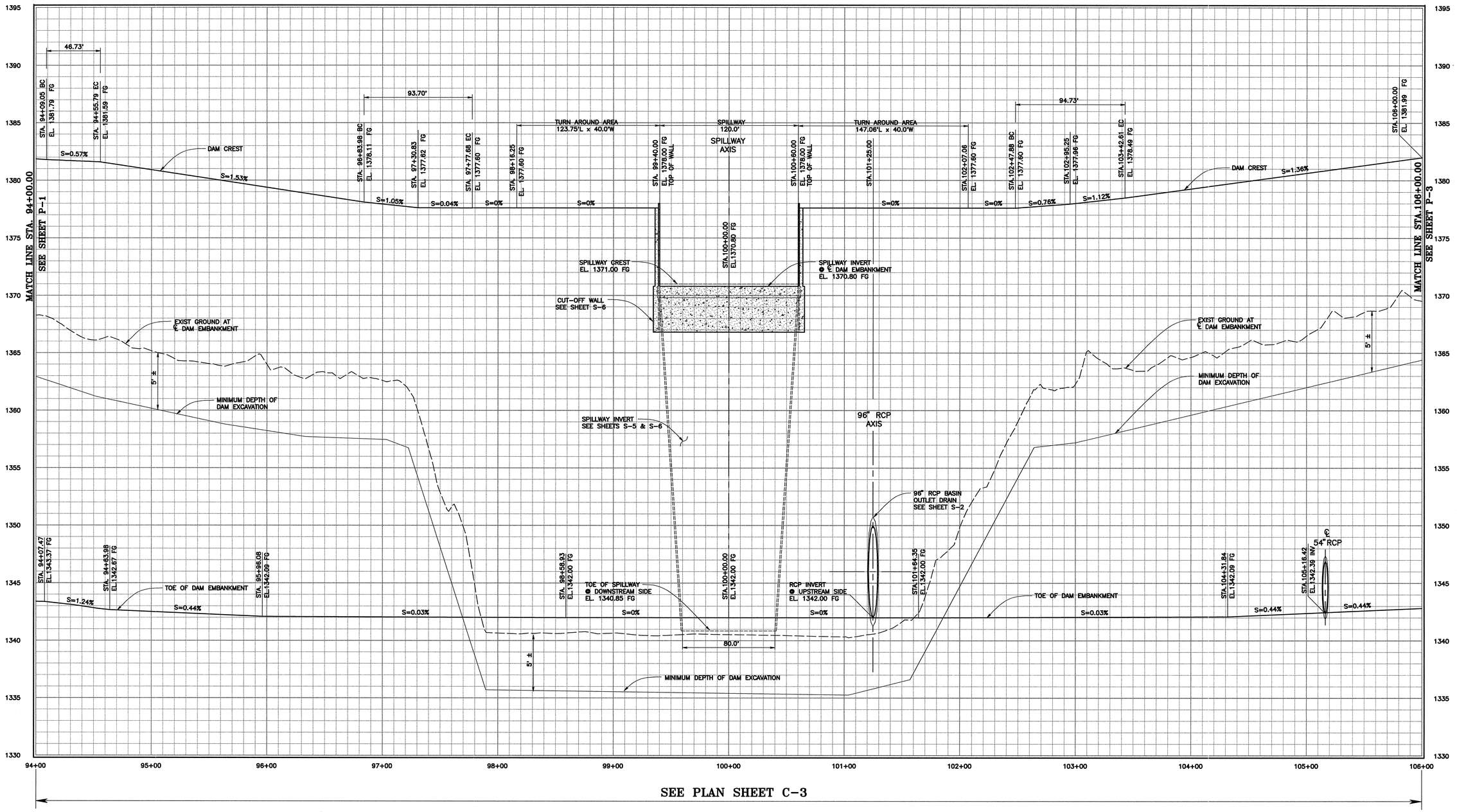

SEE PLAN SHEET C-3

NOTES:

1. DAM CREST PROFILE IS ON THE ℄ DAM EMBANKMENT
2. ELEVATION NOTED ARE PROFILE GRADE ELEVATIONS EXCEPT OTHERWISE NOTED
3. THE ACTUAL STRIPPING DEPTH SHOULD BE ESTABLISHED IN THE FIELD AT THE TIME OF CONSTRUCTION
4. DEPTH OF DAM EXCAVATION SHALL BE ADJUSTED IN THE FIELD BY THE EINGINEER SO THAT ALL LOOSE SOILS SHALL BE REMOVED TO EXPOSE DENSE NATIVE SOILS BELOW THE FILL EMBANKMENT

HORIZONTAL SCALE 1"=40'
0 40 80 120

VERTICAL SCALE 1"=4'
0 4 8 12

REGISTERED PROFESSIONAL ENGINEER
JAMES PATRICK BOMCIUK
No. 41807
Exp. 3/31/08
CIVIL
STATE OF CALIFORNIA

SAN BERNARDINO COUNTY FLOOD CONTROL DISTRICT 1939 CALIFORNIA

REVISIONS			
MARK	DATE	DESCRIPTION	BY:

SUBMITTED BY:
CHIEF, ENGINEERING DIVISION DATE

RECOMMENDED BY:
ASSIST. FLOOD CONTROL ENGINEER DATE

APPROVED BY:
FLOOD CONTROL ENGINEER DATE

PROJ. ENGR.	DES. BY:	REV'D BY:	DRAWN BY:
T.R.	S.F.B./D.J.N.	J.B.	S.F.B./D.J.N.

SAN BERNARDINO COUNTY FLOOD CONTROL DISTRICT

FONTANA-RIALTO DRAINAGE SYSTEM

CACTUS BASIN NO. 3

DAM CREST PROFILE
STA.94+00.00-STA.106+00.00

DATE	DEC. , 2007
SCALE	AS SHOWN
FILE NO.	2-104-
SHEET NO.	P-2

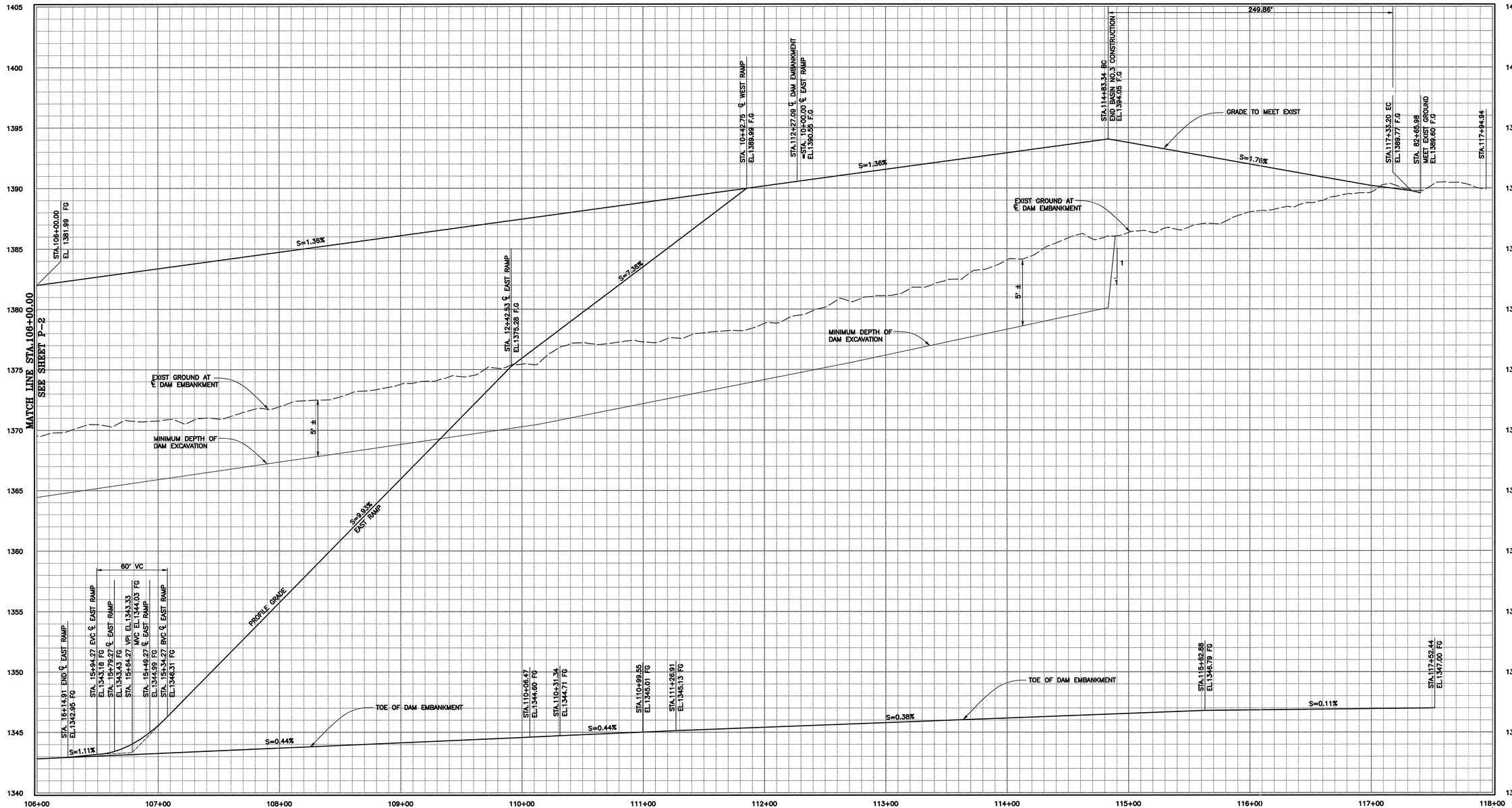

SEE PLAN SHEET C-4

NOTES:

1. DAM CREST PROFILE IS ON THE ℄ DAM EMBANKMENT
2. ELEVATION NOTED ARE PROFILE GRADE ELEVATIONS EXCEPT OTHERWISE NOTED
3. THE ACTUAL STRIPPING DEPTH SHOULD BE ESTABLISHED IN THE FIELD AT THE TIME OF CONSTRUCTION
4. DEPTH OF DAM EXCAVATION SHALL BE ADJUSTED IN THE FIELD BY THE ENGINEER SO THAT ALL LOOSE SOILS SHALL BE REMOVED TO EXPOSE DENSE NATIVE SOILS BELOW THE FILL EMBANKMENT
5. EAST RAMP ELEVATION IS FOR THE CENTERLINE OF RAMP, SEE G-3

HORIZONTAL SCALE 1"=40'
0 40 80 120

VERTICAL SCALE 1"=4'
0 4 8 12

REGISTERED PROFESSIONAL ENGINEER
JAMES PATRICK BORBOUR
No. 41807
Exp. 3/31/08
CIVIL
STATE OF CALIFORNIA

SAN BERNARDINO COUNTY FLOOD CONTROL DISTRICT 1939 CALIFORNIA

REVISIONS			
MARK	DATE	DESCRIPTION	BY:

SUBMITTED BY: _____ CHIEF, ENGINEERING DIVISION DATE

RECOMMENDED BY: _____ ASSIST. FLOOD CONTROL ENGINEER DATE

APPROVED BY: _____ FLOOD CONTROL ENGINEER DATE

PROJ. ENGR.	DES. BY:	REV'D BY:	DRAWN BY:
T.R.	S.F.B./D.J.N.	J.B.	S.F.B./D.J.N.

SAN BERNARDINO COUNTY FLOOD CONTROL DISTRICT

FONTANA-RIALTO DRAINAGE SYSTEM

CACTUS BASIN NO. 3

DAM CREST PROFILE
STA.106+00.00-STA.117+94.94

DATE	DEC. , 2007
SCALE	AS SHOWN
FILE NO.	2-104-
SHEET NO.	P-3

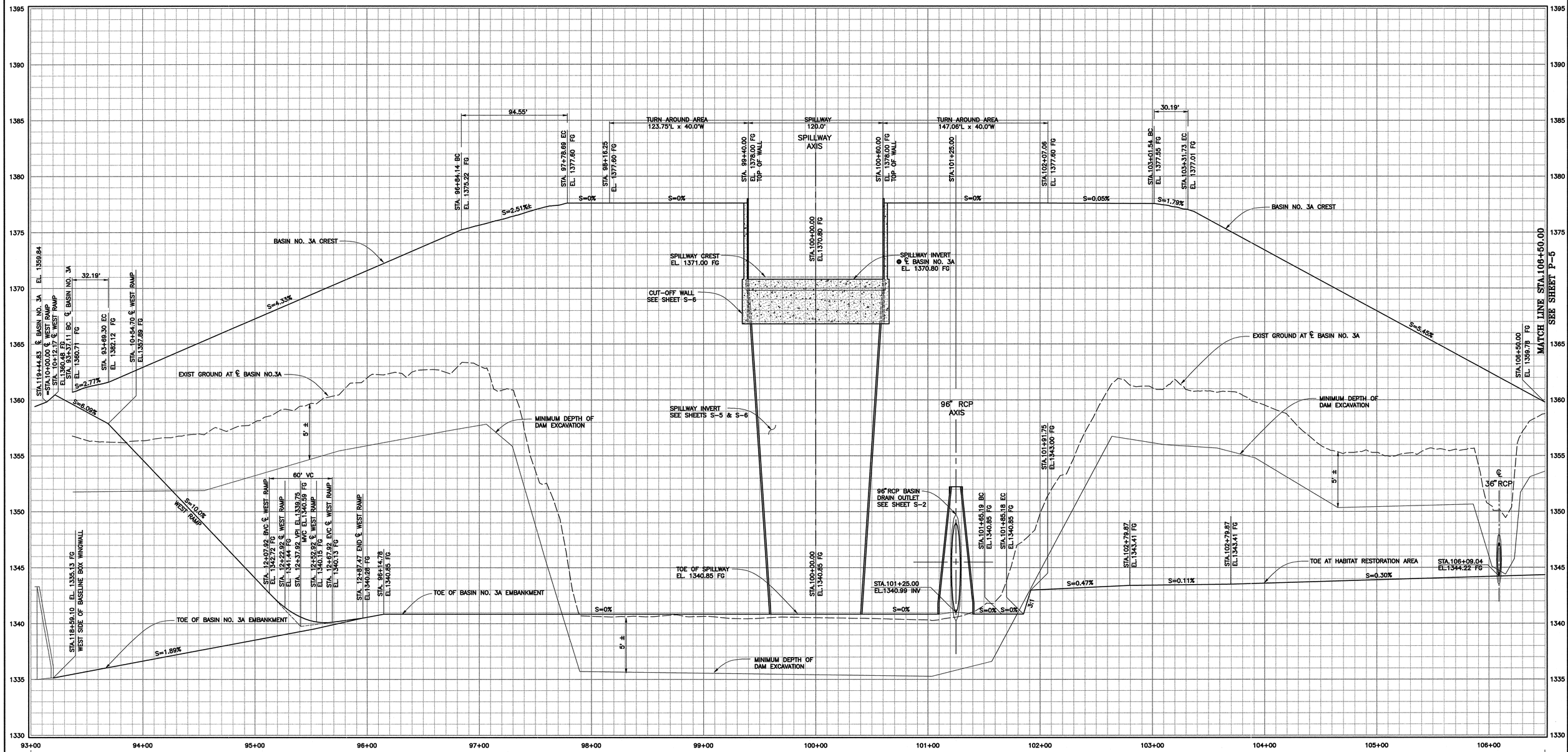

SEE PLAN SHEET C-2

NOTES:

1. BASIN NO. 3A CREST PROFILE IS ON THE ℄ BASIN NO. 3A
2. ELEVATION NOTED ARE PROFILE GRADE ELEVATIONS EXCEPT OTHERWISE NOTED
3. THE ACTUAL STRIPPING DEPTH SHOULD BE ESTABLISHED IN THE FIELD AT THE TIME OF CONSTRUCTION
4. DEPTH OF DAM EXCAVATION SHALL BE ADJUSTED IN THE FIELD BY THE ENGINEER SO THAT ALL LOOSE SOILS SHALL BE REMOVED TO EXPOSE DENSE NATIVE SOILS BELOW THE FILL EMBANKMENT
5. WEST RAMP ELEVATION IS FOR THE CENTERLINE OF RAMP, SEE G-2

HORIZONTAL SCALE 1"=40'
0 40 80 120

VERTICAL SCALE 1"=4'
0 4 8 12

REGISTERED PROFESSIONAL ENGINEER JAMES PATRICK BOWLIK No. 41807 Exp. 3/31/08 CIVIL STATE OF CALIFORNIA

SAN BERNARDINO COUNTY FLOOD CONTROL DISTRICT 1939 CALIFORNIA

REVISIONS			
MARK	DATE	DESCRIPTION	BY:

SUBMITTED BY:

CHIEF, ENGINEERING DIVISION DATE

RECOMMENDED BY:

ASSIST. FLOOD CONTROL ENGINEER DATE

APPROVED BY:

FLOOD CONTROL ENGINEER DATE

PROJ. ENGR.	DES. BY:	REV'D BY:	DRAWN BY:
T.R.	S.F.B./D.J.N.	J.B.	S.F.B./D.J.N.

SAN BERNARDINO COUNTY FLOOD CONTROL DISTRICT

FONTANA-RIALTO DRAINAGE SYSTEM

CACTUS BASIN NO. 3

BASIN NO. 3A CREST PROFILE STA.93+37.11-STA.106+50.00

DATE	SCALE	FILE NO.	SHEET NO.
DEC. , 2007	AS SHOWN	2-104-	P-4

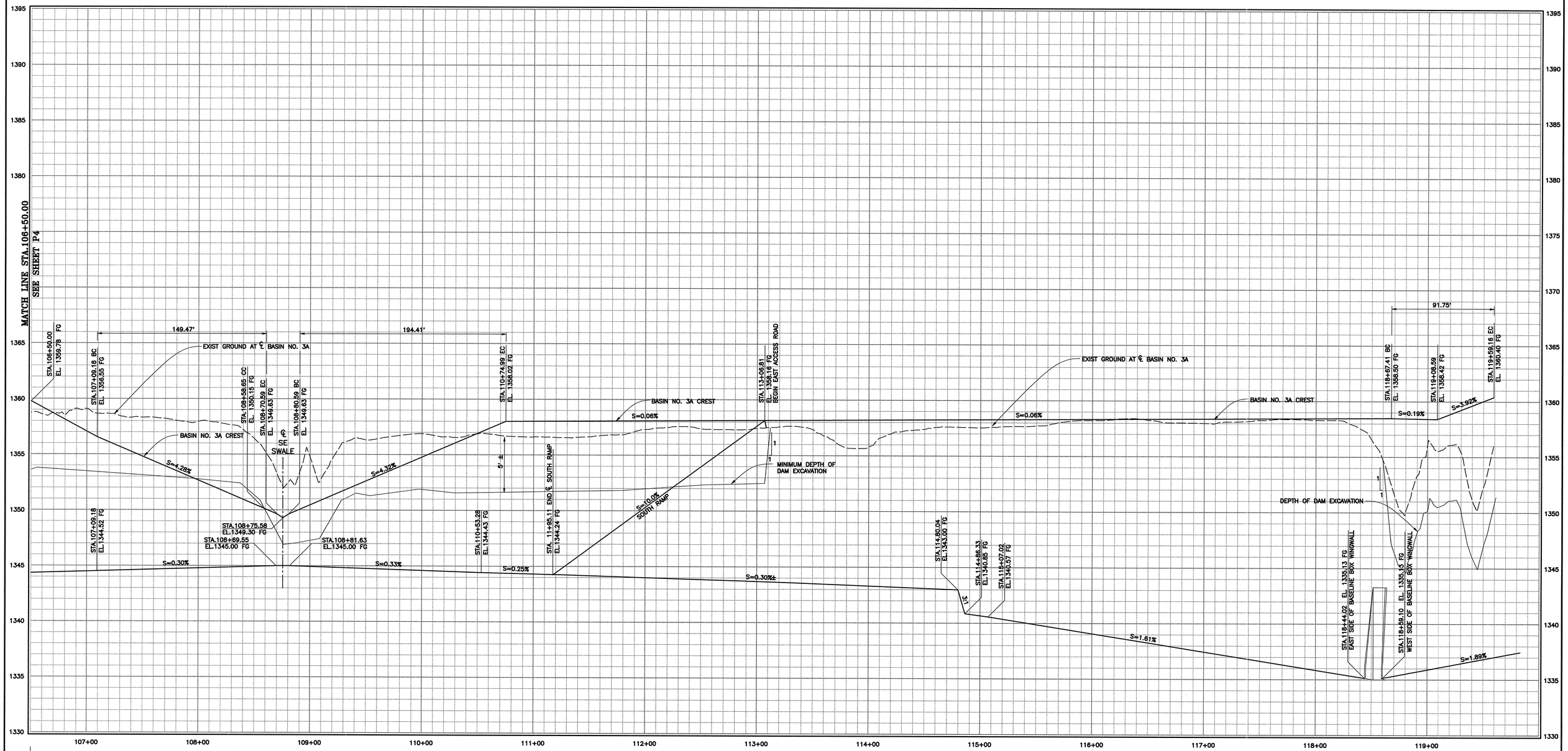

SEE PLAN SHEET C-2

NOTES:

1. BASIN NO. 3A CREST PROFILE IS ON THE ℄ BASIN NO. 3A
2. ELEVATION NOTED ARE PROFILE GRADE ELEVATIONS EXCEPT OTHERWISE NOTED
3. THE ACTUAL STRIPPING DEPTH SHOULD BE ESTABLISHED IN THE FIELD AT THE TIME OF CONSTRUCTION
4. DEPTH OF DAM EXCAVATION SHALL BE ADJUSTED IN THE FIELD BY THE ENGINEER SO THAT ALL LOOSE SOILS SHALL BE REMOVED TO EXPOSE DENSE NATIVE SOILS BELOW THE FILL EMBANKMENT
5. SOUTH RAMP ELEVATION IS FOR THE CENTERLINE OF RAMP, SEE G-2

HORIZONTAL SCALE 1"=40'
0 40 80 120

VERTICAL SCALE 1"=4'
0 4 8 12

REGISTERED PROFESSIONAL ENGINEER JAMES PATRICK BORCHERDING No. 41807 Exp. 3/31/08 CIVIL STATE OF CALIFORNIA

SAN BERNARDINO COUNTY FLOOD CONTROL DISTRICT 1939 CALIFORNIA

REVISIONS			
MARK	DATE	DESCRIPTION	BY:

SUBMITTED BY: _____ CHIEF, ENGINEERING DIVISION DATE

RECOMMENDED BY: _____ ASSIST. FLOOD CONTROL ENGINEER DATE

APPROVED BY: _____ FLOOD CONTROL ENGINEER DATE

PROJ. ENGR.	DES. BY:	REV'D BY:	DRAWN BY:
T.R.	S.F.B./D.J.N.	J.B.	S.F.B./D.J.N.

SAN BERNARDINO COUNTY FLOOD CONTROL DISTRICT

FONTANA-RIALTO DRAINAGE SYSTEM

CACTUS BASIN NO. 3

BASIN NO. 3A CREST PROFILE STA.106+50.00-STA.119+59.16

DATE	SCALE	FILE NO.	SHEET NO.
DEC. , 2007	AS SHOWN	2-104-	P-5

STRUCTURAL NOTES:

GENERAL:

1. ALL DETAILS MARKED "TYPICAL" SHALL BE USED WHEREVER APPLICABLE, UNLESS OTHERWISE INDICATED ON PLANS.
2. ALL WORKMANSHIP AND MATERIALS SHALL CONFORM TO THE SPECIAL PROVISOINS AND THE CALTRANS STANDARD SPECIFICATIONS, 2002 EDITION.
3. CONTRACTOR SHALL PROVIDE ALL CONSTRUCTION JOINTS AS REQUIRED TO PERFORM THE WORK. THE PREFERRED LOCATIONS ARE SHOWN ON THE DRAWINGS. ADDITIONAL JOINTS OR REVISED LOCATIONS FROM THOSE SHOWN OR DELETION OF JOINTS SHOWN SHALL REQUIRE APPROVAL FROM THE ENGINEER.

CONCRETE:

1. CONCRETE SHALL ATTAIN THE FOLLOWING 28-DAY ULTIMATE COMPRESSIVE STRENGTHS:

   CLASS A – 4,000 PSI: REINFORCED CONCRETE SPILLWAY WALLS, PIPE CRADLES, SADDLES AND ENCASEMENT, PIPE COLLAR, TYPE-A PIPE CLOSURE (CLASS A) ROADWAY SWALES USE 1" MAXIMUM AGGREGATE.

   CLASS D – 5,000 PSI: REINFORCED CONCRETE SPILLWAY WALL FOOTING AND INVERT, LOW FLOW PIPE FLOOR SLAB, CUTOFF WALLS, AND FLOATER SLABS. USE 1 1/2" MAXIMUM AGGREGATE.

   CLASS B – 3,250 PSI: CONCRETED ROCK SLOPE PROTECTION, OUTLET SPILLWAY, GROUTED ROCK FOR THE SPLASH PAD AND LOW FLOW PIPE OUTLET, CHAIN LINK FENCE POST FOOTING, FLARED END SECTION, V-DITCHES, CONCRETE SWALE. USE FINE AGGREGATE

2. CEMENT SHALL BE PORTLAND CEMENT CONFORMING TO ASTM C150, TYPE II MODIFIED CONFORMING TO SECTION 90-4 OF THE CALTRANS STANDARD SPECIFICATIONS, 2002 EDITION.

REINFORCING STEEL:

1. ALL REINFORCING STEEL SHALL BE NEW BILLET STEEL DEFORMED BARS AND SHALL CONFORM TO ASTM A 615, GRADE 60.
2. THE CLEAR COVER OVER REINFORCING SHALL BE AS FOLLOWS:
   - A. CONCRETE CAST AGAINST EARTH ..... 3"
   - B. FORMED CONCRETE AGAINST EARTH ..... 3"
   - C. CONCRETE SLABS & WALLS NOT EXPOSED TO EARTH, WEATHER OR WATER ..... 3/4"
   - D. TOP CURTAIN OF INVERT STEEL ..... 3"
   - E. WET CONCRETE WALL FACE ..... 2 1/2"

COMPRESSION LAP SPLICE LENGTH (COLUMNS ONLY)= 3ØD
R: 3D FOR #3 THRU #8
4D FOR #9 THRU #11

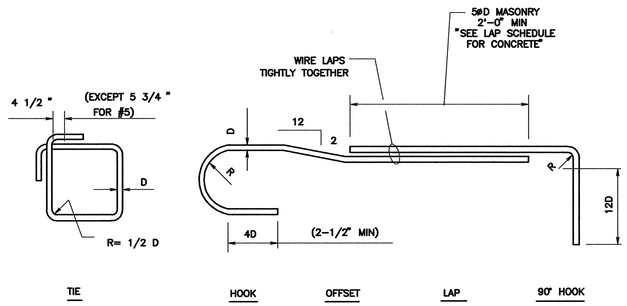

TYPICAL REINFORCING BAR DETAIL

TENSION LAP SPLICE SCHEDULE – ALL SPLICES CLASS B			
BAR SIZE	l_d *	SPLICE LENGTHS	
		TOP BARS	OTHER BARS
#3	12	19"	14"
#4	14	24"	18"
#5	18	30"	23"
#6	21	35"	27"
#7	25	42"	33"
#8	30	51"	39"
#9	38	64"	49"
#10	48	81"	62"
#11	59	100"	77"

* l_d = BAR DEVELOPMENT LENGTH FOR:
1. f_y = 60 ksi; f'_c = 4,000 psi
2. CLEAR SPACING BETWEEN BARS > 3D
3. CONCRETE COVER > 2D
4. CONFORMANCE WITH ACI 318, WHERE APPLICABLE

NOTES:

1. AS SOON AS INITIAL SET HAS TAKEN PLACE, CLEAN CONCRETE SURFACE BY SANDBLASTING TO EXPOSE CLEAN COARSE AGGREGATE FIRMLY EMBEDDED.
2. ROUGHENED CONSTRUCTION JOINT OR KEYWAY (SEE TO RIGHT)
3. SEALANT SHALL BE PLACED ON WATER SIDE OF CONCRETE AFTER CONCRETE IS CURED.
4. STARTER WALL IS REQUIRED WITH WATERSTOP ONLY
5. CONSTRUCTION JOINT LOCATION WHERE WATERSTOP IS NOT REQUIRED.
6. WATERSTOP WITHOUT CENTER BULB MAY BE USED AT ALL CONSTRUCTION JOINTS
7. WATERSTOP SHALL BE SPLICED WATERTIGHT PER MFRS. SPECS.
8. MANUFACTURED TEES, CROSSES AND CORNERS MAY BE SUBSTITUTED FOR FIELD THERMALLY WELDED DEVICES WITH FIELD THERMALLY WELDED JOINTS MADE IN PVC WATERSTOP RUNS

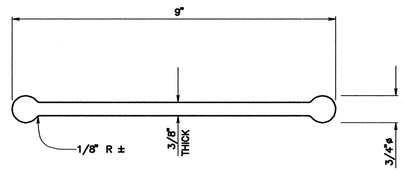

DUMBELL WATERSTOP

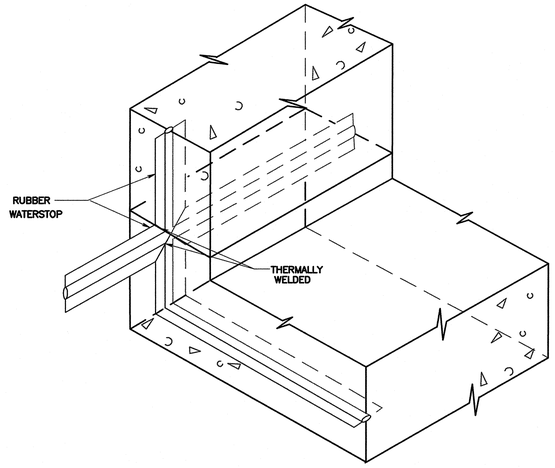

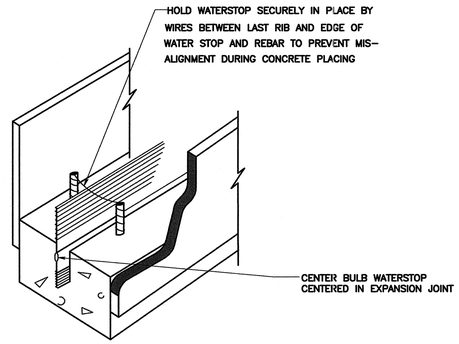

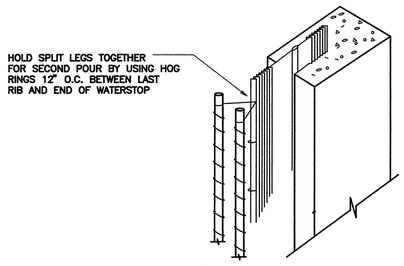

TYPICAL PVC WATERSTOP JOINT

REGISTERED PROFESSIONAL ENGINEER
JAMES PATRICK BORDUK
No. 41807
Exp. 3/31/08
CIVIL
STATE OF CALIFORNIA

SAN BERNARDINO COUNTY FLOOD CONTROL DISTRICT 1939 CALIFORNIA

REVISIONS			
MARK	DATE	DESCRIPTION	BY:

SUBMITTED BY:
CHIEF, ENGINEERING DIVISION DATE
RECOMMENDED BY:
ASSIST. FLOOD CONTROL ENGINEER DATE
APPROVED BY:
FLOOD CONTROL ENGINEER DATE

PROJ. ENGR.	DES. BY:	REV'D BY:	DRAWN BY:
T.R.	S.F.B./D.J.N.	J.B.	S.F.B./D.J.N.

SAN BERNARDINO COUNTY FLOOD CONTROL DISTRICT

FONTANA-RIALTO DRAINAGE SYSTEM

CACTUS BASINS NO. 3

TYPICAL STRUCTURAL NOTES AND DETAILS

DATE	DEC. , 2007
SCALE	AS SHOWN
FILE NO.	2-104-
SHEET NO.	S-1

SCALE
HORIZONTAL 1"= 20'
VERTICAL 1"= 4'

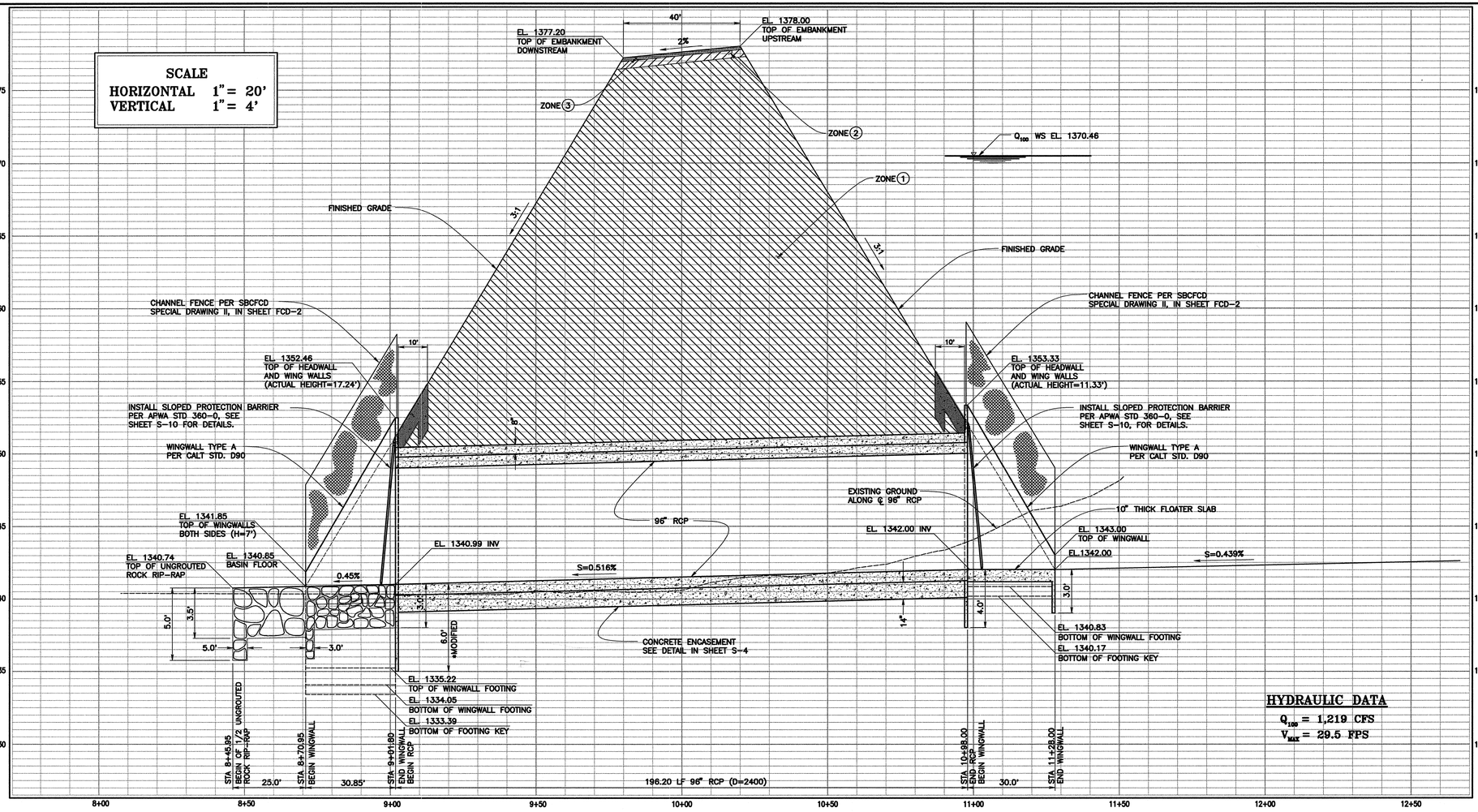

HYDRAULIC DATA
Q_{100} = 1,219 CFS
V_{MAX} = 29.5 FPS

PROFILE – 96" RCP OUTLET, BASIN DRAIN

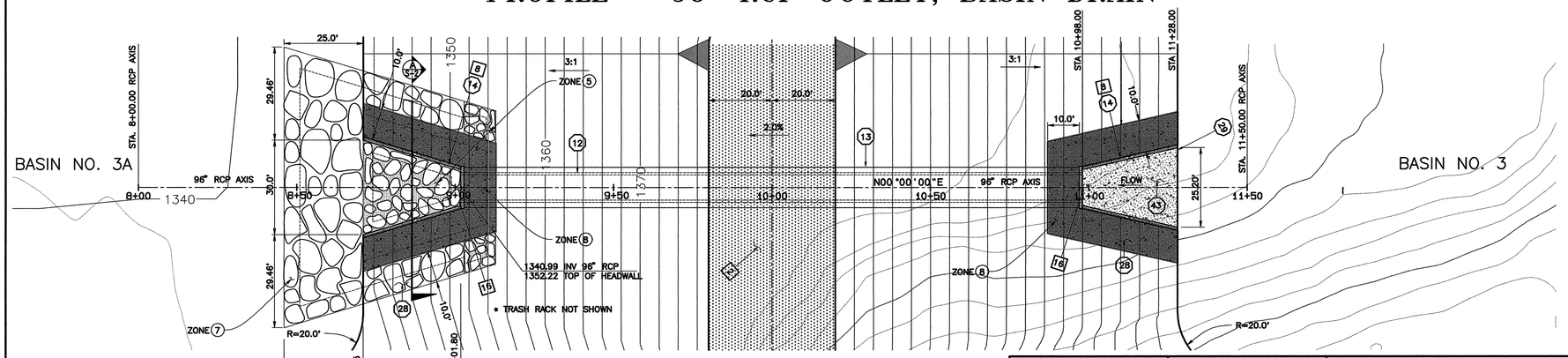

PLAN – 96" RCP OUTLET, BASIN DRAIN

GRAPHIC SCALE 1"=20'
0 20 40 60

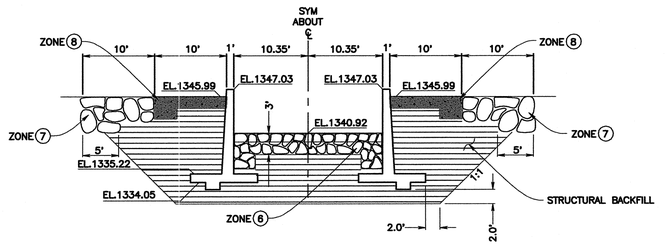

A SECTION @ STA 8+86.37
SCALE 1" = 10'

WINGWALL AND HEADWALL MODIFICATIONS:

STRUCTURAL DIMENSIONS FOR WINGWALLS SHOWN ON THE PLAN & PROFILE VIEWS HEREON, FOR THE 96" OUTLET STRUCTURE SHALL BE AS PER CALTRANS STD. NO. D-90 EXCEPT AS NOTED HEREON.

1. ACTUAL WALL HEIGHTS ARE AS SHOWN ON THE PROFILE VIEW, THE STRUCTURAL SECTION SHALL BE AS PER THE STANDARD DETAIL WITH (DESIGN H=+1') ADJUST STEEL AT THE TOP OF THE WALL FOR 1'-0", DIFFERENCE BETWEEN THE ACTUAL HEIGHT AND THE DESIGN HEIGHT.
2. LONGITUDINAL STEEL SHALL BE #5 @ 12" OC IN PLACE OF WHAT IS SHOWN IN THE STANDARD DETAIL.
3. HEADWALL FOOTING FOR OUTLET STRUCTURE SHALL BE MODIFIED SO THAT THE DEPTH IS EQUAL TO 6' IN PLACE OF THE 4' SHOWN IN THE STANDARD DETAIL . ADD AND ADJUST BARS SHOWN AS REQUIRED TO MAINTAIN STRUCTURAL LISTING SHOWN IN THE STANDARD PLAN DETAIL.
4. CONSTRUCT WEEPHOLES PER DETAILS SHOWN ON STD. D-90.

CONSTRUCTION CALLOUTS:

2 3" AC PVMT ROAD SECTION PER
8 CHANNEL FENCE PER SHT FCD-II
16 SLOPED PROTECTION BARRIER PER APWA SP 360-0

CONSTRUCTION NOTES:

12 CONSTRUCT 96" RCP OUTLET BASIN DRAIN PER PLAN, PROFILE ON SHEET C-5, AND DETAILS ON SHEET S-3 (D-LOAD PER PROFILE)
13 CONSTRUCT 96" RCP ENCASEMENT PER DETAILS ON SHEET S-4
14 CONSTRUCT HEADWALL AND WINGWALLS FOR 96" RCP OUTLET PER PLAN, PROFILE ON SHEET S-2, DETAILS ON SHEET S-3 AND STRUCTURAL DETAILS ON SHEETS S-8 & S-9 PER CALTRANS STD. DETAIL D90A
28 CONSTRUCT ROCK CUT-OFF WALLS AROUND THE OUTSIDE PERIMETER OF ROCK RIP RAP AREAS AS FOLLOWS:
THE OUTSIDE PERIMETER OF 1/2 TON UNGROUTED ROCK RIP RAP AREAS SHALL BE 5' DEEP AND 5' WIDE
THE OUTSIDE PERIMETER OF 1/4 TON GROUTED ROCK RIP RAP SHALL BE 5' DEEP AND 3' WIDE
THE OUTSIDE PERIMETER OF GROUTED FACING ROCK SHALL BE 3' WIDE AND 3' DEEP
29 CONSTRUCT CONCRETE CUT-OFF WALLS PER PLAN ON SHEET C-6 AND DETAILS ON SHEETS S-3, S-6
43 CONSTRUCT 10" THICK REINFORCED CONCRETE FLOATER SLAB PER PLAN AND DETAILS ON SHEET S-3

MATERIAL ZONES:

ZONE (1) MIXED, BORROW FROM BASIN EXCAVATION

SIZE	PERCENT PASSING
2.0"	100
1.5"	73 – 100
1.0"	65 – 92
# 4	37 – 64
#10	25 – –52
#20	15 – 37
#40	9 – 25
#200	≥ 8

ZONE (2) CLASS 2 AGGREGATE BASE, 6" DEEP
ZONE (3) 3" AC PAVEMENT (ON 6" OF ZONE 2, 95% RELATIVE COMPACTION)
ZONE (6) 1/4 TON GROUTED ROCK RIP-RAP, THICKNESS = 3' MIN., DEPTH OF GROUT PENETRATION =1.25', METHOD 'A' PLACEMENT
ZONE (7) 1/2 TON UNGROUTED ROCK RIP-RAP, THICKNESS = 3.5' MIN., METHOD 'A' PLACEMENT
ZONE (8) CONCRETED FACING ROCK, THICKNESS = 1.5' MIN., DEPTH OF GROUT PENETRATION =.75', METHOD 'A' PLACEMENT

REGISTERED PROFESSIONAL ENGINEER
JAMES PATRICK BORCHUK
No. 41807
Exp. 3/31/08
CIVIL
STATE OF CALIFORNIA

SAN BERNARDINO COUNTY FLOOD CONTROL DISTRICT 1939 CALIFORNIA

REVISIONS			
MARK	DATE	DESCRIPTION	BY:

SUBMITTED BY:
CHIEF, ENGINEERING DIVISION DATE
RECOMMENDED BY:
ASSIST. FLOOD CONTROL ENGINEER DATE
APPROVED BY:
FLOOD CONTROL ENGINEER DATE

PROJ. ENGR.	DES. BY:	REV'D BY:	DRAWN BY:
T.R.	S.F.B./D.J.N.	J.B.	S.F.B./D.J.N.

SAN BERNARDINO COUNTY
FLOOD CONTROL DISTRICT
FONTANA-RIALTO DRAINAGE SYSTEM
CACTUS BASIN NO. 3
96" RCP OUTLET BASIN DRAIN
PLAN, PROFILE AND SECTIONS

DATE DEC. ,2007
SCALE AS SHOWN
FILE NO. 2-104-
SHEET NO. S-2

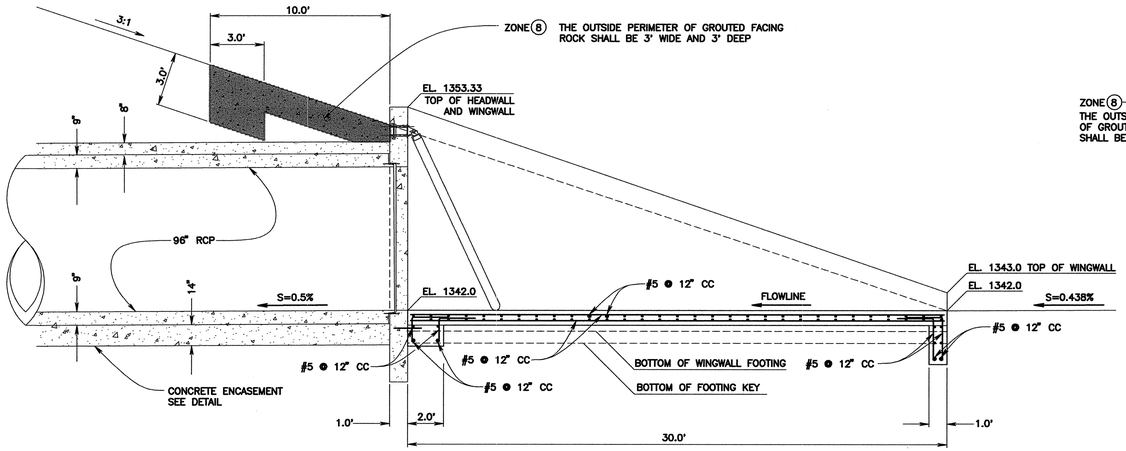

PROFILE – 96" RCP BASIN DRAIN STRUCTURE

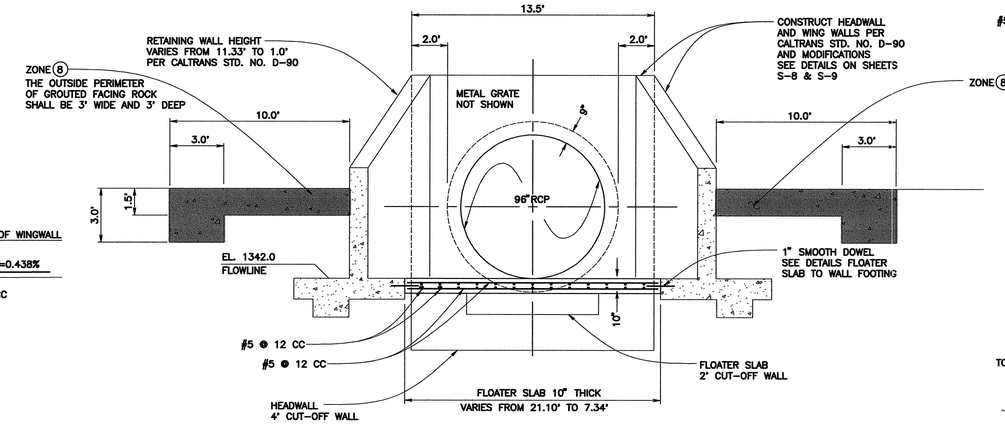

B **SECTION**
SCALE 1" = 4'

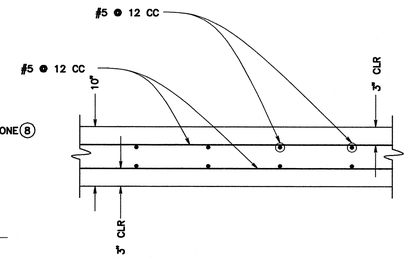

FLOATER SLAB REINFORCEMENT
SCALE 1" = 1'

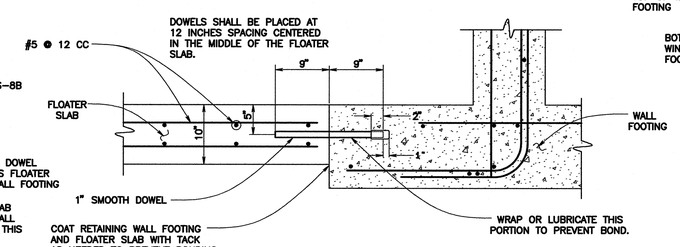

FLOATER SLAB TO WALL FOOTING CONNECTION
SCALE 1" = 1'

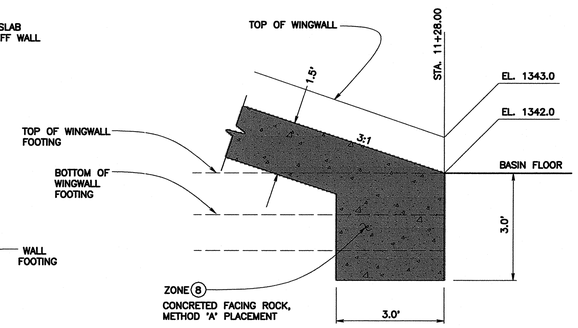

C **ROCK CUT OFF WALL**
SCALE 1" = 2'

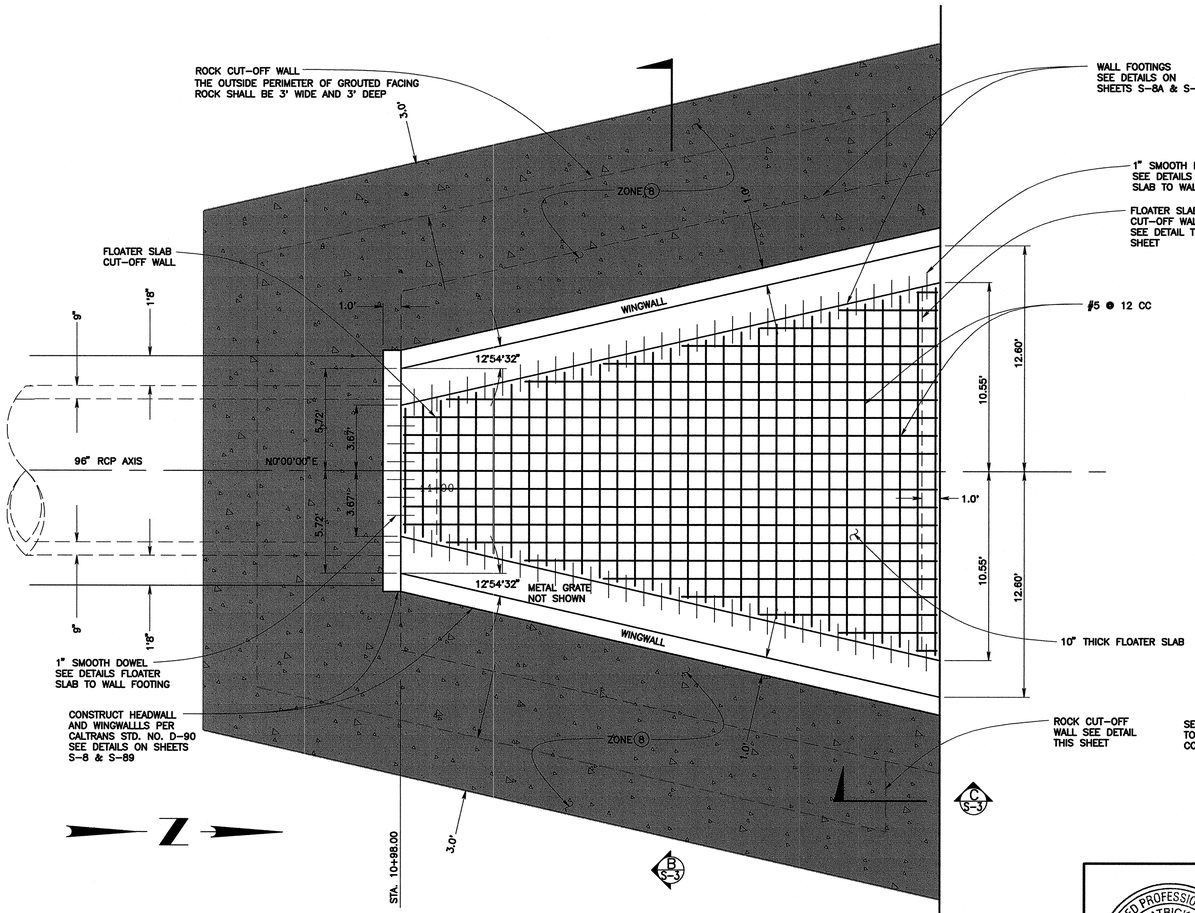

PLAN – 96" RCP BASIN DRAIN STRUCTURE

GRAPHIC SCALE 1"=4'
0 4 8 12

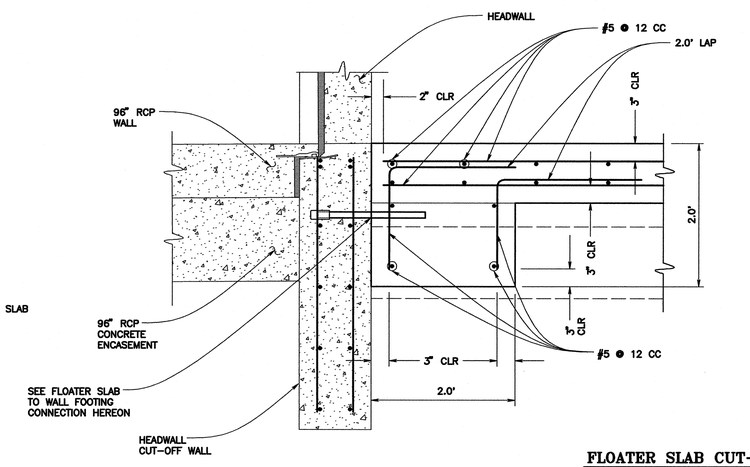

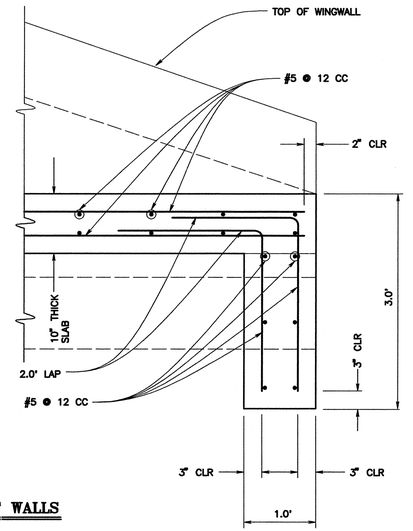

FLOATER SLAB CUT-OFF WALLS
SCALE 1" = 1'

REGISTERED PROFESSIONAL ENGINEER JAMES PATRICK BORCUK No. 41807 Exp. 3/31/08 CIVIL STATE OF CALIFORNIA

SAN BERNARDINO COUNTY FLOOD CONTROL DISTRICT 1939 CALIFORNIA

REVISIONS			
MARK	DATE	DESCRIPTION	BY:

SUBMITTED BY: _____ CHIEF, ENGINEERING DIVISION DATE

RECOMMENDED BY: _____ ASSIST. FLOOD CONTROL ENGINEER DATE

APPROVED BY: _____ FLOOD CONTROL ENGINEER DATE

PROJ. ENGR.	DES. BY:	REV'D BY:	DRAWN BY:
T.R.	S.F.B./D.J.N.	J.B.	S.F.B./D.J.N.

SAN BERNARDINO COUNTY FLOOD CONTROL DISTRICT

FONTANA–RIALTO DRAINAGE SYSTEM

CACTUS BASIN NO. 3

96" RCP OUTLET BASIN DRAIN STRUCTURAL DETAILS

DATE	SCALE	FILE NO.	SHEET NO.
DEC. , 2007	AS SHOWN	2-104-	S-3

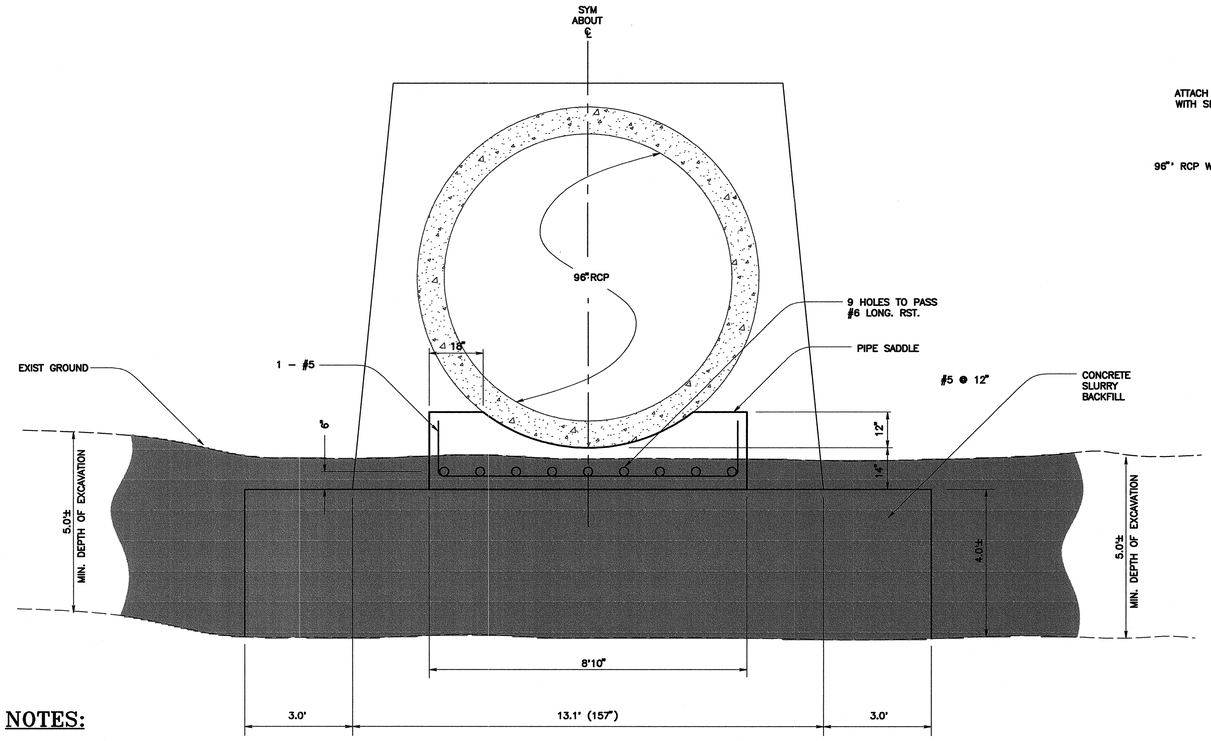

EXCAVATION AND SADDLES

SCALE 1" = 2'

NOTES:

1. SADDLE WIDTH – 12"
2. ONE OR TWO SADDLES PER PIPE JOINT, PLACED NEAR THE BELL IF ONE SADDLE IS USED, DEPENDING ON HOE THE CONTRACTOR PROPOSES TO INSTALL THE RCPs.

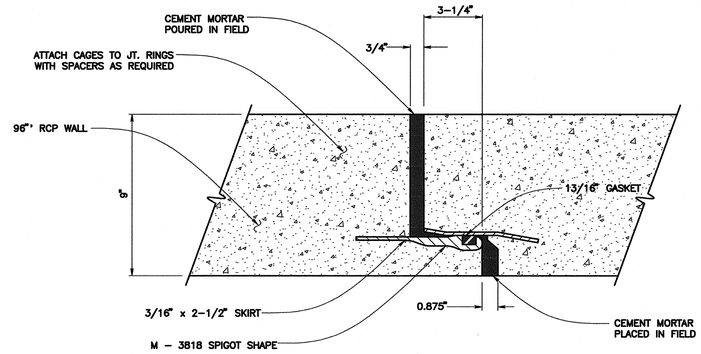

PIPE CONNECTION JOINT

SCALE: 1" = 4"

ENCASEMENT NOTES:

1. THERE WILL BE A FORMED CONSTRUCTION JOINT IN THE BEDDING AT LEAST EVERY 24" O.C. LOCATED AT A PIPE JOINT.
2. 100 PERCENT OF THE LONGITUDINAL STEEL (#6 BARS) SHALL EXTEND THROUGH THE JOINT THE NONCONTINUOUS STEEL SHALL STOP 2 INCHES SHORT OF THE JOINT.

ALL REMNANTS OF PREVIOUS CONSTRUCTION OR OTHER MATERIAL THAT MIGHT INTERFERE WITH THE PERFORMANCE OR COMPLETION OF THE WORK, SHOULD BE CLEARED FROM THE SITE. GRASS AND BRUSH ROOTS SHOULD BE REMOVED. THE ACTUAL STRIPPING DEPTH SHOULD BE ESTABLISHED IN THE FIELD AT THE TIME OF CONSTRUCTION.

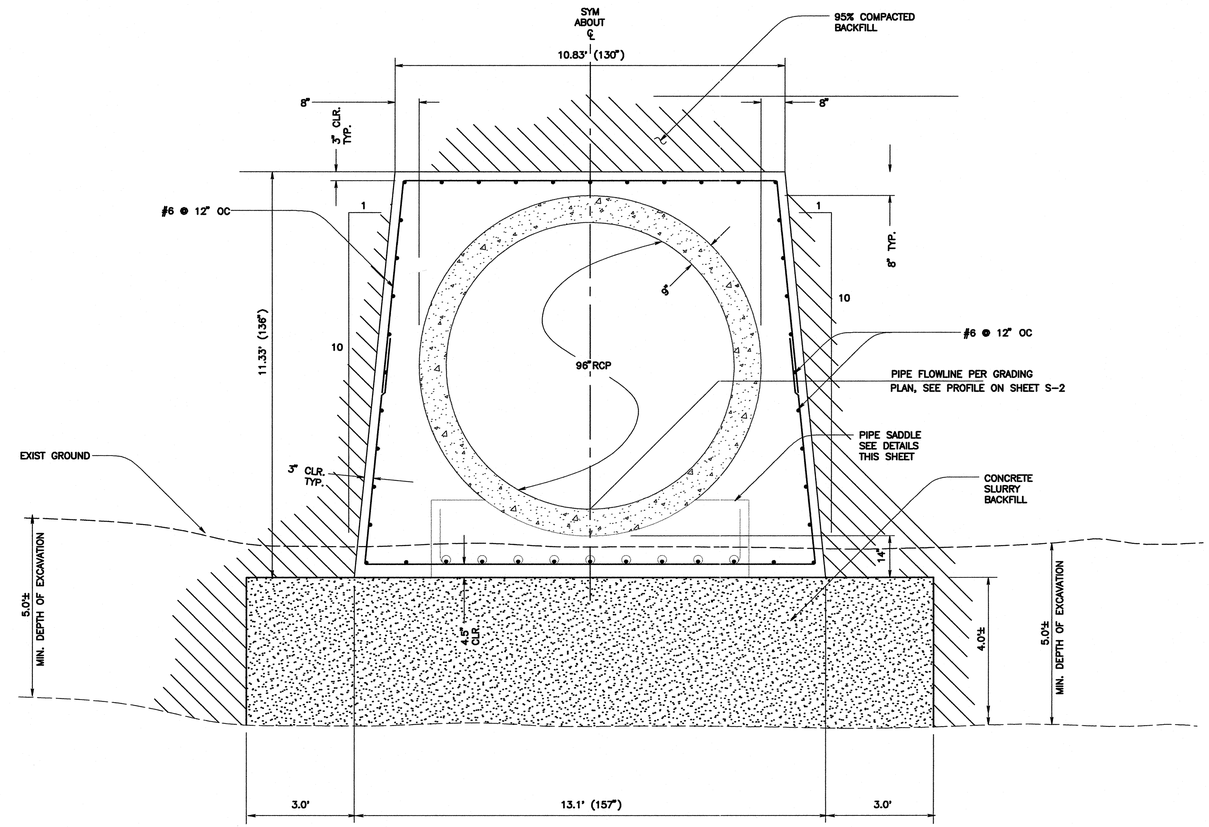

SECTION

SCALE 1" = 2'

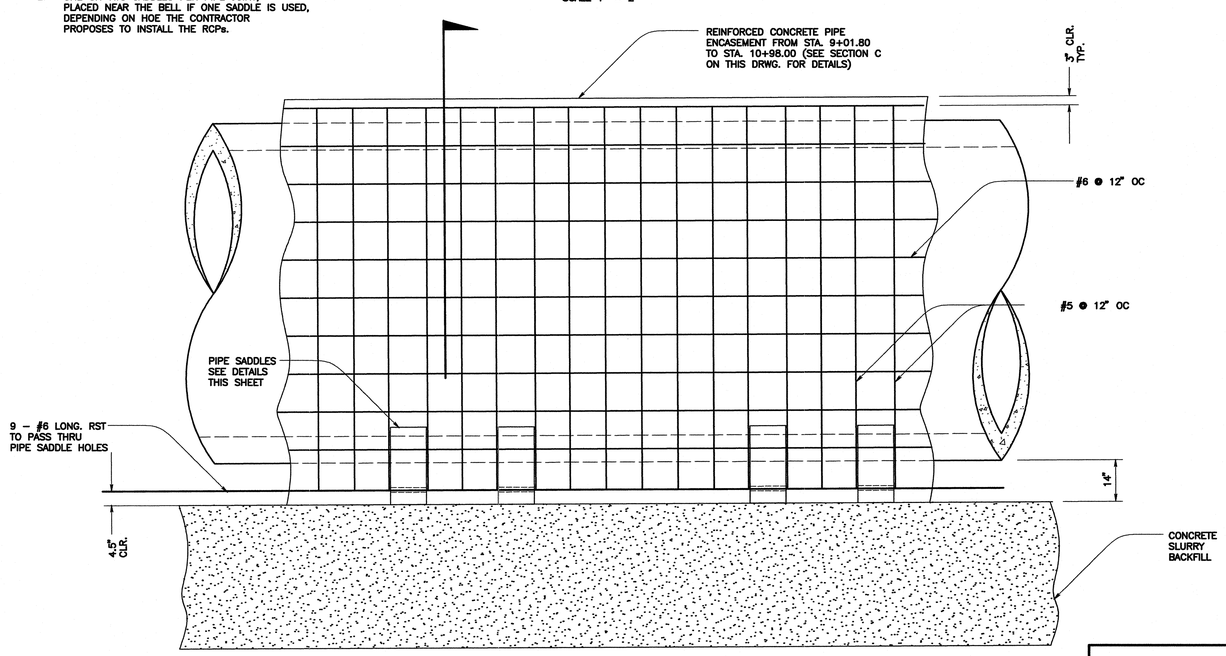

96" RCP ENCASEMENT PROFILE

GRAPHIC SCALE 1"=2'

0 2 4 6

REGISTERED PROFESSIONAL ENGINEER JAMES PATRICK BOROUK No. 41807 Exp. 3/31/08 CIVIL STATE OF CALIFORNIA

SAN BERNARDINO COUNTY FLOOD CONTROL DISTRICT 1939 CALIFORNIA

REVISIONS			
MARK	DATE	DESCRIPTION	BY:

SUBMITTED BY:

CHIEF, ENGINEERING DIVISION DATE

RECOMMENDED BY:

ASSIST. FLOOD CONTROL ENGINEER DATE

APPROVED BY:

FLOOD CONTROL ENGINEER DATE

PROJ. ENGR.	DES. BY:	REV'D BY:	DRAWN BY:
T.R.	S.F.B./D.J.N.	J.B.	S.F.B./D.J.N.

SAN BERNARDINO COUNTY FLOOD CONTROL DISTRICT

FONTANA–RIALTO DRAINAGE SYSTEM

CACTUS BASIN NO. 3

96" OUTLET BASIN DRAIN ENCASEMENT DETAILS

DATE DEC. , 2007

SCALE AS SHOWN

FILE NO. 2-104

SHEET NO. S-4

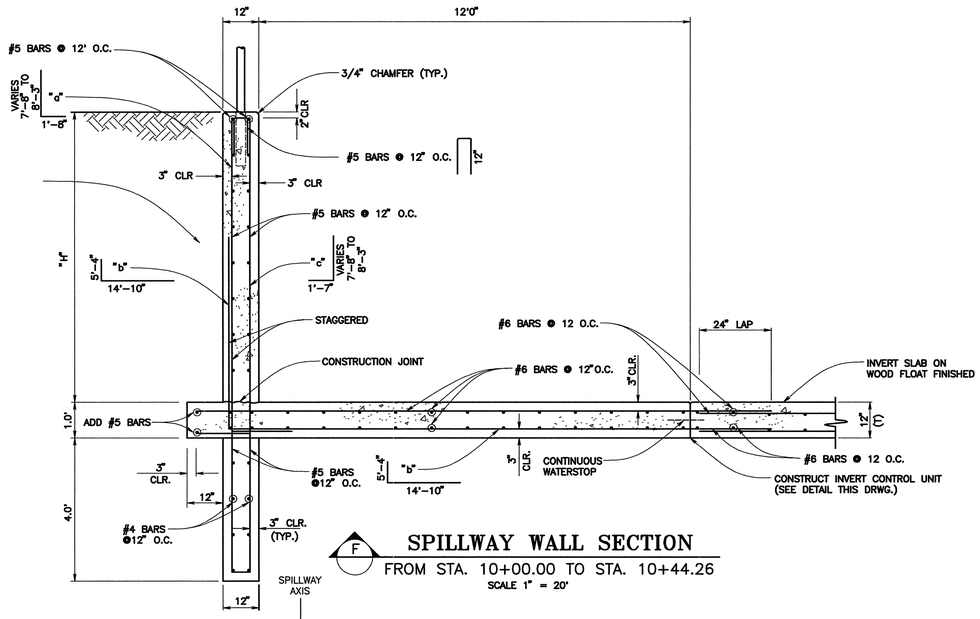

SPILLWAY WALL SECTION
F
FROM STA. 10+00.00 TO STA. 10+44.26
SCALE 1" = 20'

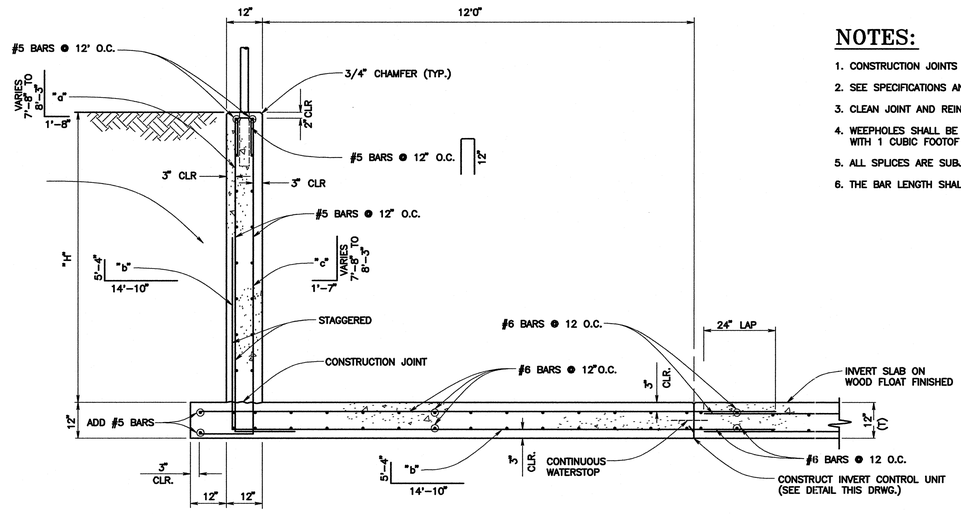

SPILLWAY WALL SECTION
E
FROM STA. 8+70.95 TO STA. 10+00.00
SCALE 1" = 20'

NOTES:

1. CONSTRUCTION JOINTS SHALL BE LOCATED AS SHOWN IN THIS SHEET
2. SEE SPECIFICATIONS AND STRUCTURAL NOTES PER S-1
3. CLEAN JOINT AND REINFORCING PRIOR TO PLACING ADJOINING CONCRETE
4. WEEPHOLES SHALL BE FORMED AS SHOWN IN BOTH WALLS AT A SPACING OF 10' WITH 1 CUBIC FOOTOF FILTER MATERIAL WRAPPED IN FILTER FABRIC PLACED AT EACH HOLE
5. ALL SPLICES ARE SUBJECTED TO APPROVAL BY THE ENGINEER
6. THE BAR LENGTH SHALL VARY INFORMALY THROUGH THE TRANSITION

DESIGN DATA:

SOIL DENSITY=145 PCF
MIN. LAP=1'-6"

ALLOWABLE STRESSES:

- F'_c= 5000 PSI F_y= 60,000 PSI
- F_b= 1800 PSI F_s= 24,000 PSI
- *FOR INVERT SLAB, WALLS AND OTHER ITEMS USE F'_c= 4000 PSI

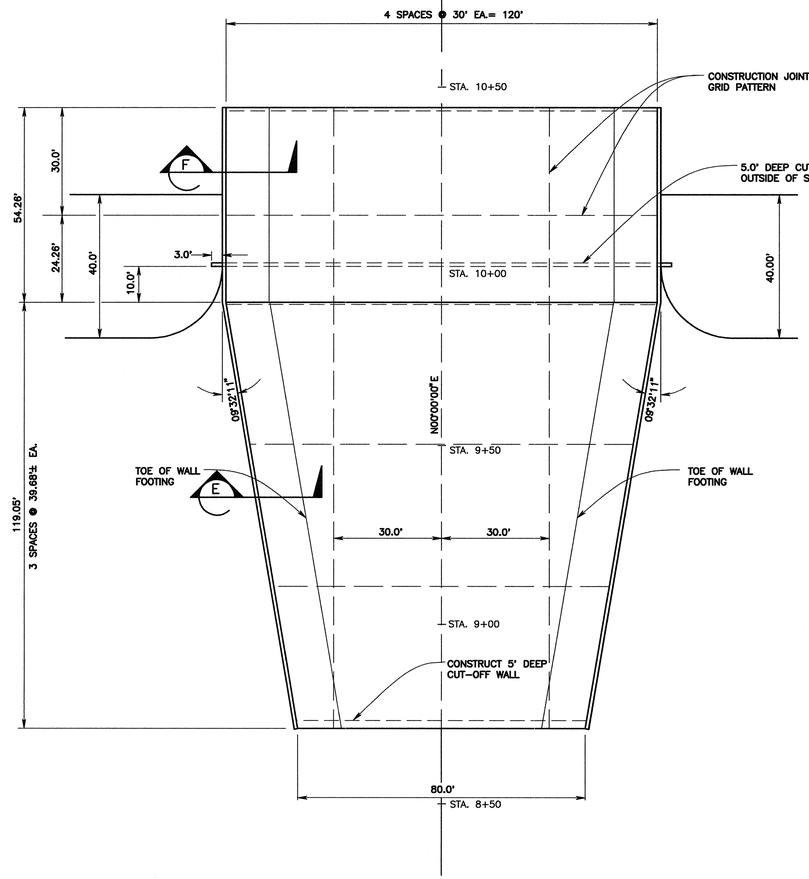

SPILLWAY CONSTRUCTION JOINT GRID PLAN
SCALE 1" = 20'

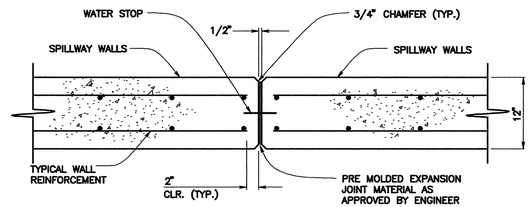

WALL CONTRACTION JOINT DETAIL
SCALE 1" = 1'

TABLE 1 SPILLWAY STRUCTURAL WALL SCHEDULE					
CONCRETE			REINFORCING STEEL		
STATIONS	HEIGHT "H"	SPILLWAY WIDTH	"a"	"b"	"c"
8+70.95 TO 9+90.00	7'-0"	80' TO 120'	#6 @ 12"	#6 @ 12"	#5 @ 12"
9+90.00 TO 10+23.00	7' TO 7'-8"	120'	#6 @ 12"	#6 @ 9"	#5 @ 12"
10+23.00 TO 10+44.26	7'-8" TO 1'-0"	120'	#6 @ 12"	#6 @ 9"	#5 @ 12"

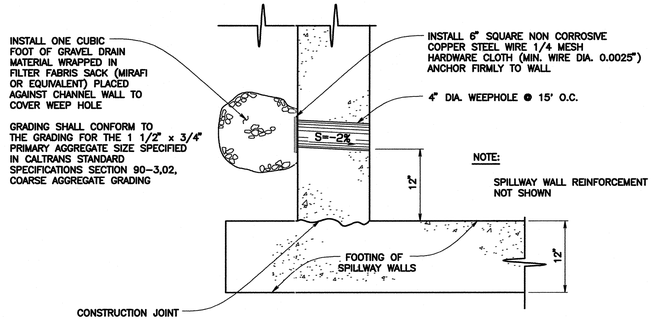

WEEPHOLE DETAIL
SCALE 1" = 1'

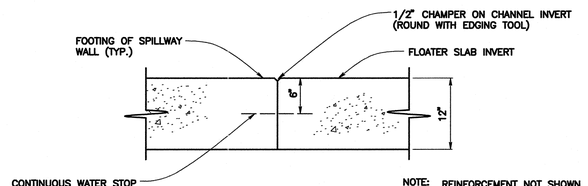

INVERT CONTROL JOINT DETAIL
(LONGITUDINAL AND TRANSVERSE JOINT ALONG SPILLWAY INVERT)
SCALE 1" = 1'

GRAPHIC SCALE 1"=20'
0 20 40 60

REGISTERED PROFESSIONAL ENGINEER
JAMES PATRICK BORCHUK
No. 41807
Exp. 3/31/08
CIVIL
STATE OF CALIFORNIA

SAN BERNARDINO COUNTY FLOOD CONTROL DISTRICT 1939 CALIFORNIA

REVISIONS			
MARK	DATE	DESCRIPTION	BY:

SUBMITTED BY:
CHIEF, ENGINEERING DIVISION DATE
RECOMMENDED BY:
ASSIST. FLOOD CONTROL ENGINEER DATE
APPROVED BY:
FLOOD CONTROL ENGINEER DATE

PROJ. ENGR.	DES. BY:	REV'D BY:	DRAWN BY:
T.R.	S.F.B./D.J.N.	J.B.	S.F.B./D.J.N.

SAN BERNARDINO COUNTY FLOOD CONTROL DISTRICT
FONTANA-RIALTO DRAINAGE SYSTEM
CACTUS BASINS NO. 3
BASIN OUTLET SPILLWAY
TYPICAL WALL
STRUCTURAL SECTIONS & DETAILS

DATE	SCALE	FILE NO.	SHEET NO.
DEC. , 2007	AS SHOWN	2-104-	S-5

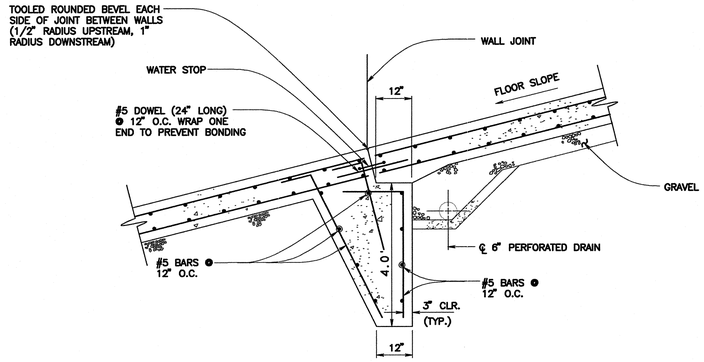

SUBDRAIN CUT-OFF WALL DETAIL

NOT TO SCALE

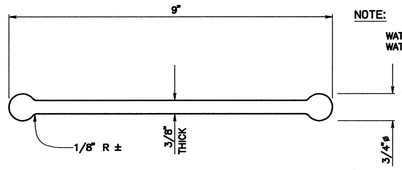

DUMBELL WATERSTOP

NOT TO SCALE

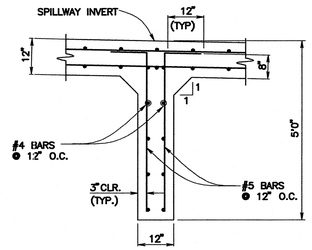

A CUT OFF WALL SECTION

NOT TO SCALE

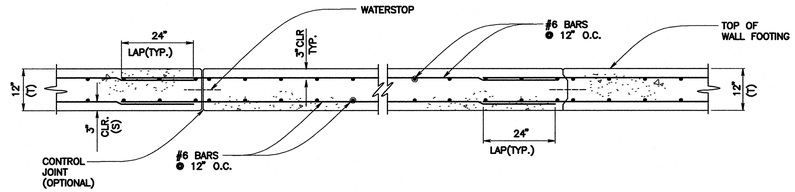

SPILLWAY INVERT DETAIL

NOT TO SCALE

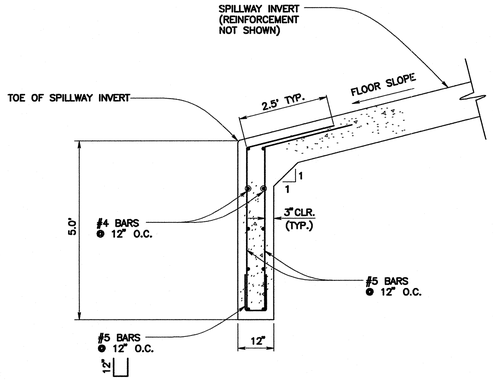

CUT-OFF WALL DETAIL @ STA. 8+70.95

NOT TO SCALE

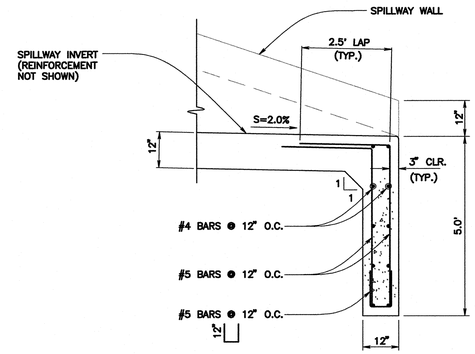

CUT-OFF WALL DETAIL @ STA. 10+44.26

NOT TO SCALE

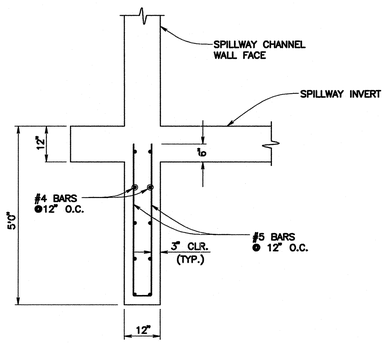

CUT-OFF WALL FROM STA. 10+00.00 TO STA. 10+44.26

NOT TO SCALE

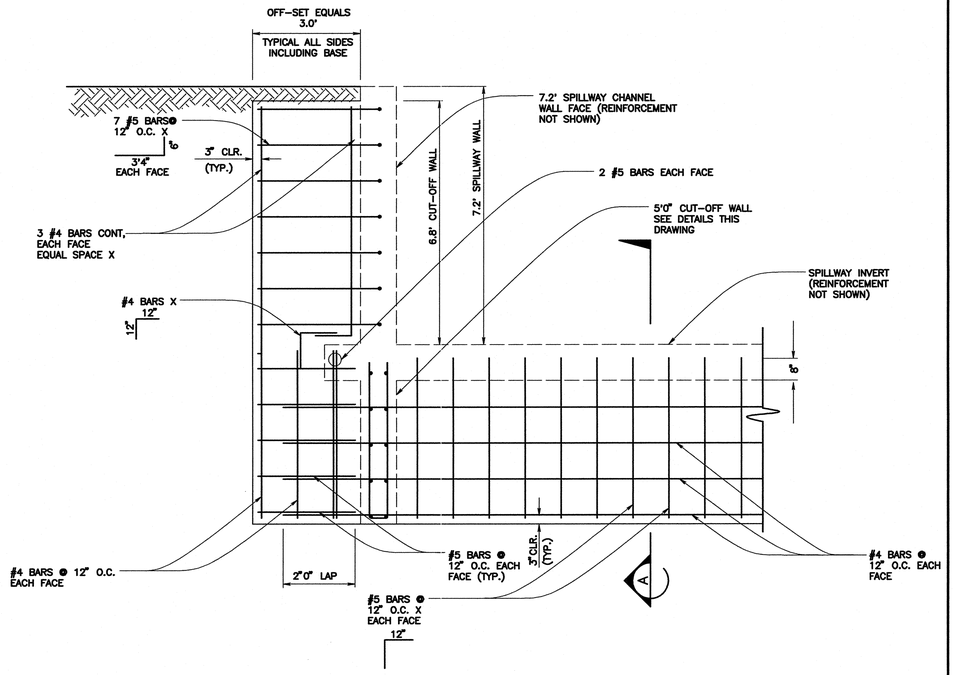

CUT-OFF WALL PROFILE @ STA. 10+00.00

NOT TO SCALE

REGISTERED PROFESSIONAL ENGINEER
JAMES PATRICK BOCUK
No. 41807
Exp. 3/31/08
CIVIL
STATE OF CALIFORNIA

SAN BERNARDINO COUNTY FLOOD CONTROL DISTRICT 1939 CALIFORNIA

REVISIONS			
MARK	DATE	DESCRIPTION	BY:

SUBMITTED BY:

CHIEF, ENGINEERING DIVISION DATE

RECOMMENDED BY:

ASSIST. FLOOD CONTROL ENGINEER DATE

APPROVED BY:

FLOOD CONTROL ENGINEER DATE

PROJ. ENGR.	DES. BY:	REV'D BY:	DRAWN BY:
T.R.	S.F.B./D.J.N.	J.B.	S.F.B./D.J.N.

SAN BERNARDINO COUNTY FLOOD CONTROL DISTRICT

FONTANA-RIALTO DRAINAGE SYSTEM

CACTUS BASINS NO. 3

TYPICAL SPILLWAY INVERT AND WALLS SECTIONS AND DETAILS

DATE	DEC. , 2007
SCALE	AS SHOWN
FILE NO.	2-104-
SHEET NO.	S-6

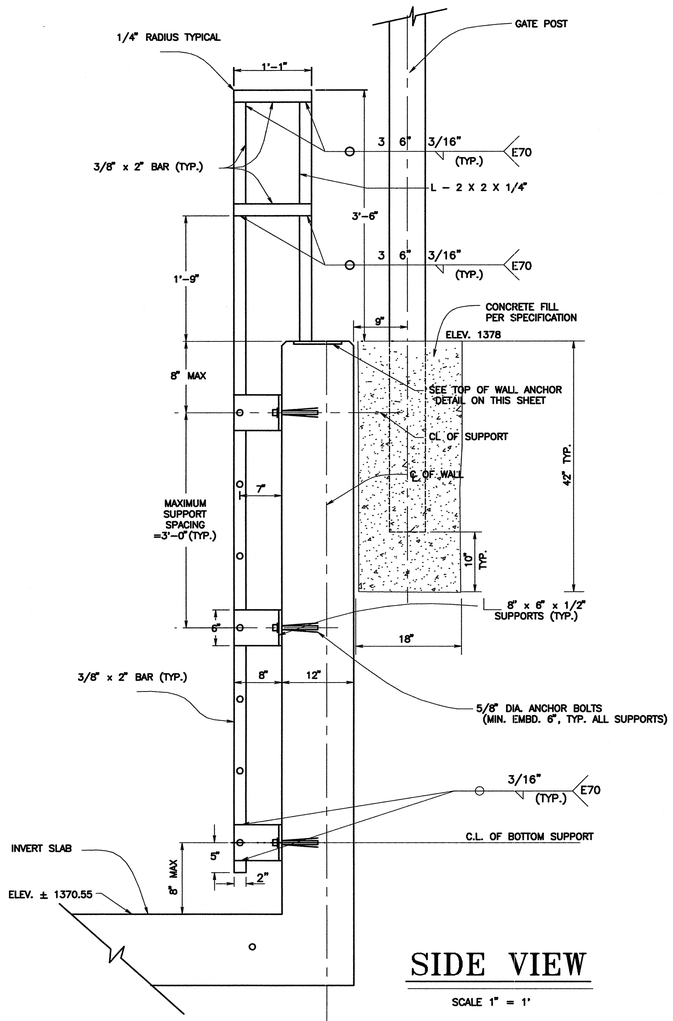

SIDE VIEW

SCALE 1" = 1'

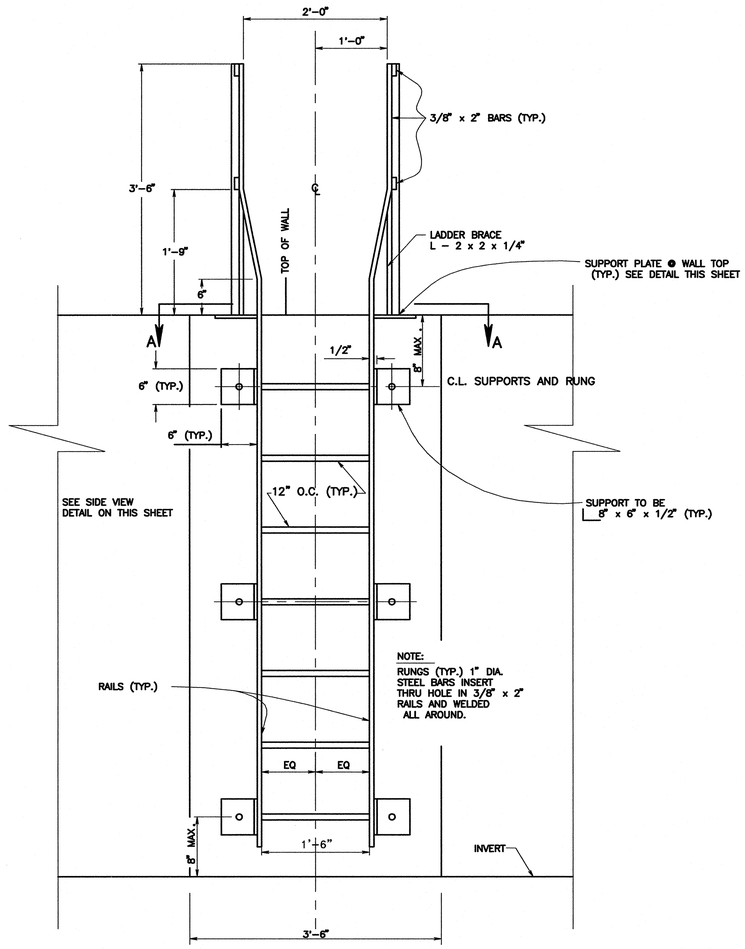

INVERT ACCESS LADDER ELEVATION VIEW

NOT TO SCALE

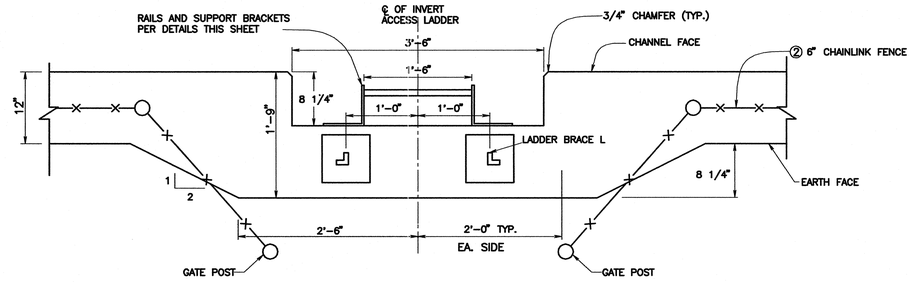

SECTION A-A INVERT ACCESS LADDER

SCALE 1" = 1'

NOTE: 1) FENCING GATE NOT SHOWN

2) LOCATE GATE POST PER DETAILS UNLESS DIRECTED OTHERWISE BY THE ENGINEER

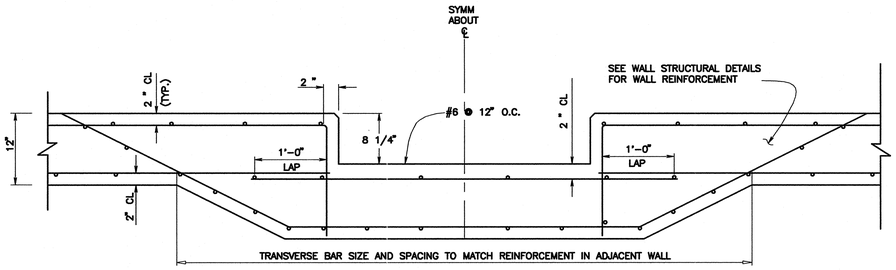

REINFORCEMENT

SCALE 1" = 1'

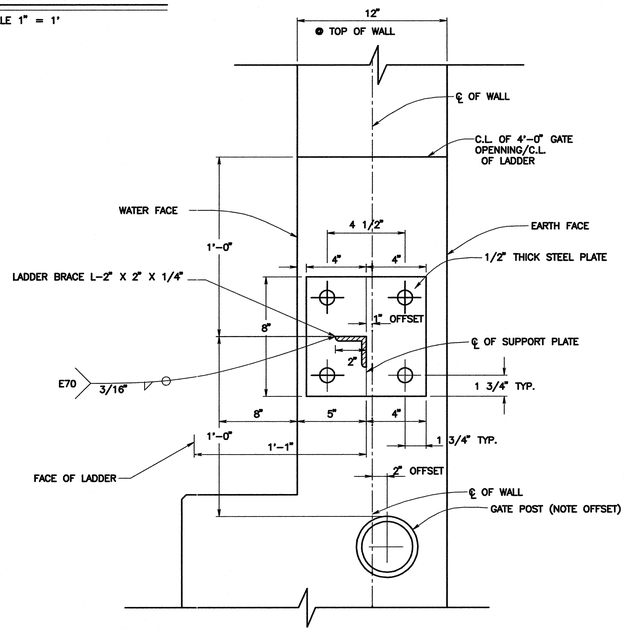

WALL SUPPORT PLAN VIEW

NOT TO SCALE

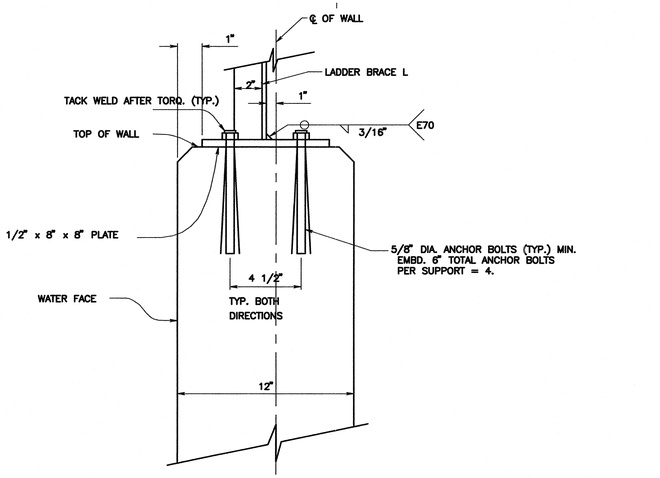

ALTERNATIVE WALL ANCHOR

NOT TO SCALE

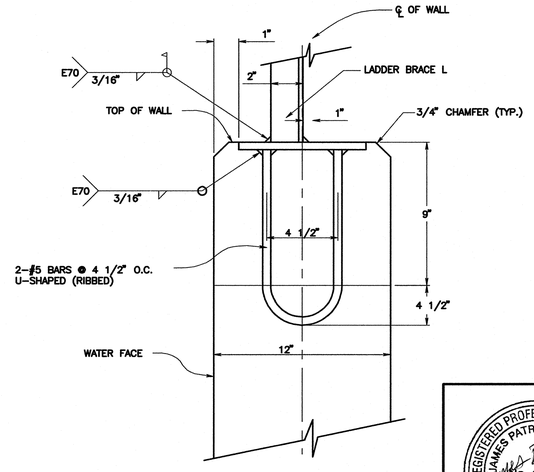

WALL ANCHOR

NOT TO SCALE

NOTES PERTAINING TO LADDER:

1. ALL STEEL MENBERS SHALL BE A-36 STEEL OR STRONGER AFTER TORQUING ANCHOR BOLTS, TACK WELD BOLTS TO PLATE AND ANGELS. ALL STEEL SURFACE SHALL BE GRINDED SMOOTH. ALL STEEL MEMBERS SHALL BE GALVANIZED AFTER FABRICATION. BOTTOM SUPPORT TO BE LOCATED AT A MAXIMUM OF 1'-0" FROM CHANNEL INVERT
2. FOR STRUCTURAL NOTES, SEE SHT. S-3

REGISTERED PROFESSIONAL ENGINEER
JAMES PATRICK BOSCUK
No. 41807
Exp. 3/31/08
CIVIL
STATE OF CALIFORNIA

SAN BERNARDINO COUNTY FLOOD CONTROL DISTRICT 1939 CALIFORNIA

REVISIONS			
MARK	DATE	DESCRIPTION	BY:

SUBMITTED BY:

CHIEF, ENGINEERING DIVISION DATE

RECOMMENDED BY:

ASSIST. FLOOD CONTROL ENGINEER DATE

APPROVED BY:

FLOOD CONTROL ENGINEER DATE

PROJ. ENGR.	DES. BY:	REV'D BY:	DRAWN BY:
T.R.	S.F.B./D.J.N.	J.B.	S.F.B./D.J.N.

SAN BERNARDINO COUNTY FLOOD CONTROL DISTRICT

FONTANA-RIALTO DRAINAGE SYSTEM

CACTUS BASIN NO. 3

SPILLWAY ACCESS LADDER DETAILS

DATE	DEC. , 2007
SCALE	AS SHOWN
FILE NO.	2-104-
SHEET NO.	S-7

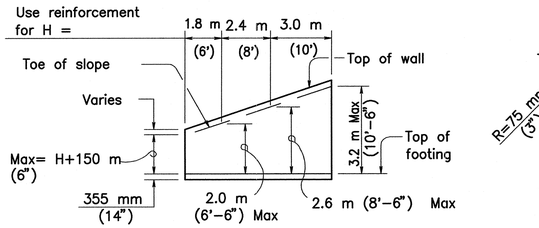

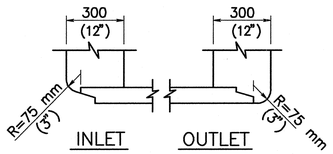

RC PIPE DETAILS

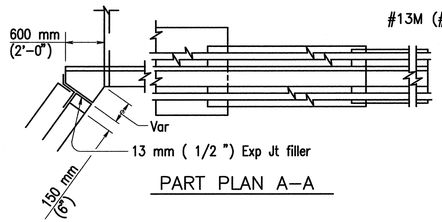

PART PLAN A–A

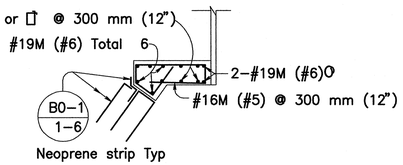

SECTION B–B

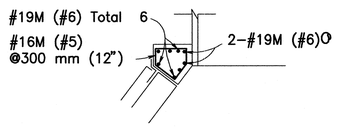

SECTION C–C

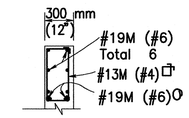

SECTION D–D

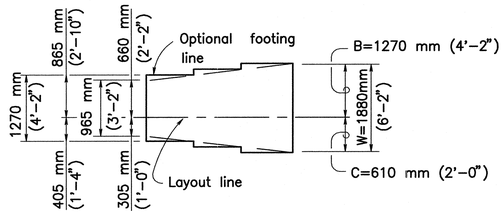

TYPICAL LAYOUT EXAMPLE

Number above "b" & "c" bars indicates distance from top of footing to upper end of bars. Bar cutoffs may be varied in increments of 150 mm (6").

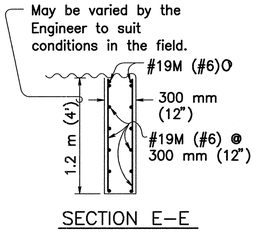

SECTION E–E

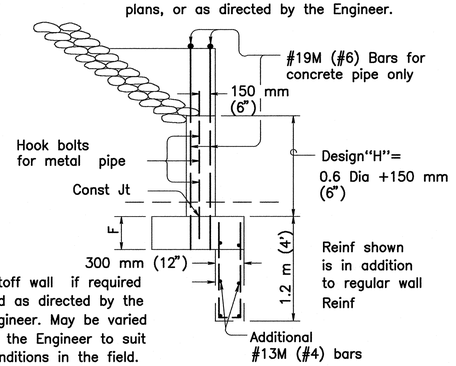

SECTION F–F

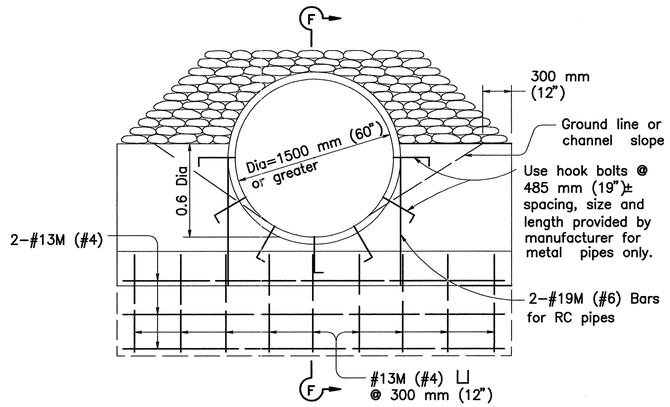

TYPE C WALL

NOTES

Unit Stresses: f = 165 MPa (24,000 psi), f'_c = 9 MPa (1,300 psi), n = 10
Maximum Toe Pressure = 144 kPa (3 k/sf).
Elevation, length and angle of flare of wings may be varied by the Engineer to suit conditions encountered in the field. Walls designed for 600 mm (2') live load surcharge, 1 : 1.5 (1.1:5) sloping surcharge not to exceed 1.5 m (5') in elevation plus 600 mm (24") live load surcharge, or unlimited 1:2 (2:1) surcharge. If 1 : 1.5 (1 1/2 : 1) slope exceeds 1.5 m (5'), use Type 2 retaining wall. Wall height may be exceeded by 150 mm (6") before going to the next greater "H".

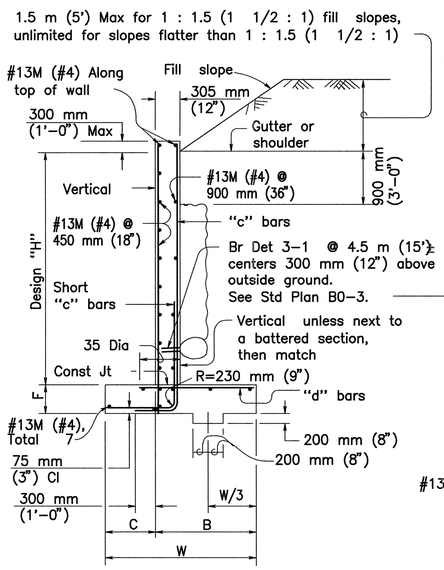

TYPICAL SECTION
H=1.2 m (4') THRU 3.7 m (12')

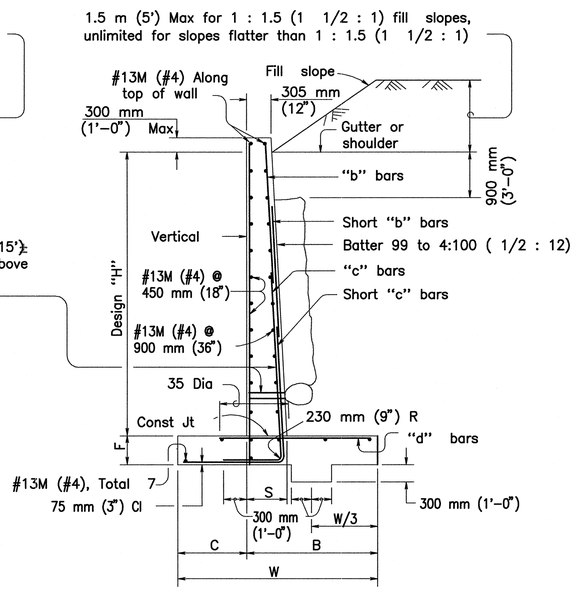

TYPICAL SECTION
H=4.0 m (13') THRU 6.1 m (20')

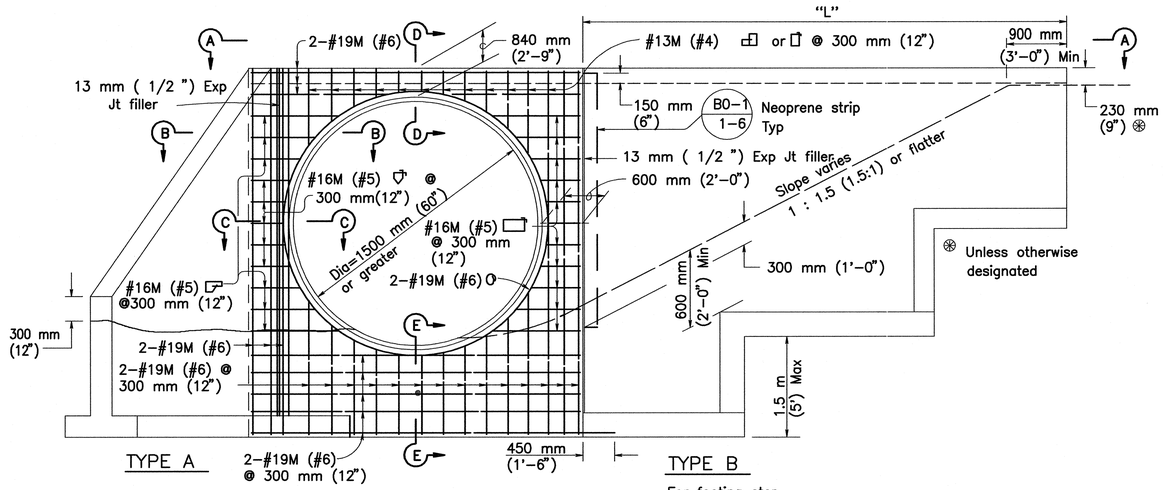

TYPE A

END ELEVATION

STRAIGHT WINGWALLS

TYPE B

For footing step dimensions and reinforcement see "Footing Step" on Std Plan B3–8.

STATE OF CALIFORNIA
DEPARTMENT OF TRANSPORTATION

PIPE CULVERT HEADWALLS, ENDWALLS AND WINGWALLS TYPES A, B AND C

These "Standard Plans for Construction of Local Streets and Roads" contain units in two systems of measurement: International System of Units (SI or "metric") and United States Standard Measures shown in the parentheses ( ) . The measurements expressed in the two systems are not necessarily equal or interchangeable. See the "Foreword" at the beginning of this publication.

SAN BERNARDINO COUNTY FLOOD CONTROL DISTRICT	DATE DEC. , 2007
FONTANA–RIALTO DRAINAGE SYSTEM	SCALE NO SCALE
HEADWALL AND WINGWALL STRUCTURAL DETAILS CALTRANS STD.– D90A	FILE NO. 2–104–
	SHEET NO. S–8

2002 DUAL UNITS STD PLAN D90A

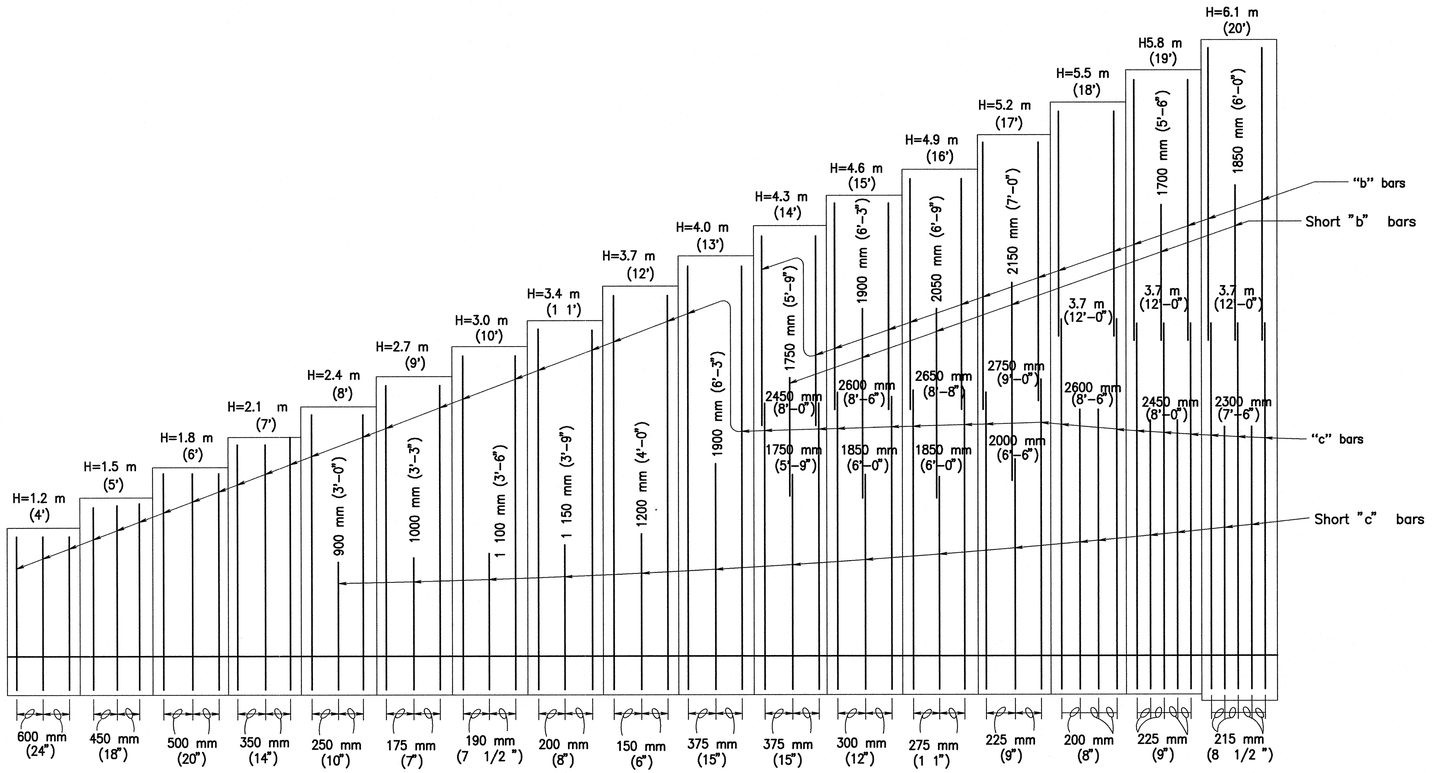

REINFORCED CONCRETE WINGWALLS

Design "H"	1.2 m (4')	1.5 m (5')	1.8 m (6')	2.1 m (7')	2.4 m (8')	2.7 m (9')	3.0 m (10')	3.4 m (1 1')	3.7 m (12')	4.0 m (13')	4.3 m (14')	4.6 m (15')	4.9 m (16')	5.2 m (17')	5.5 m (18')	5.8 m (19')	6.1 m (20')
W	965 mm (3'-2")	1120 mm (3'-8")	270 mm (4'-2")	1420 mm (4'-8")	1575 mm (5'-2")	1730 mm (5'-8")	1880 mm (6'-2")	2030 mm (6'-8")	2185 mm (7'-2")	2335 mm (7'-8")	2440 mm (8'-0")	2640 mm (8'-8")	2845 mm (9'-4")	3050 mm (10'-0")	3250 mm(10'-8")	3455 mm (11'-4")	3660 mm (12'-0")
C	305 mm (1'-0")	355 mm (1'-2")	405 mm (1'-4")	455 mm (1'-6")	510 mm (1'-8")	560 mm(1'-10")	610 mm (2'-0")	660 mm (2'-2")	710 mm (2'-4")	760 mm (2'-6")	815 mm (2'-8")	915 mm (3'-0")	1015 mm (3'-4")	1120 mm (3'-8")	1220 mm (4'-0")	1320 mm (4'-4")	1425 mm (4'-8")
B	660 mm (2'-2")	765 mm (2'-6")	865 mm (2'-10")	965 mm (3'-2")	1065 mm (3'-6")	1170 mm(3'-10")	1270 mm (4'-2")	1370 mm (4'-6")	1475 mm (4'-10")	1575 mm (5'-2")	1625 mm (5'-4")	1725 mm (5'-8")	1830 mm (6'-0")	1930 mm (6'-4")	2030 mm (6'-8")	2135 mm (7'-0")	2235 mm (7'-4")
F	355 mm (1'-2")																405 mm (1'-4")
Batter	None									4:100 (1/2 :12)							
S	305 mm (1'-0")									470mm (1'-6 1/2 ")	480 mm (1'-7")	490 mm(1'-7 1/2 ")	500 mm (1'-8")	520mm(1'-8 1/2 ")	530 mm (1'-9")	550mm(1'-9 1/2 ")	560 mm (1'-10")
"b" bars	None										#16M (#5) @ 375 mm (15")	#16M (#5) @ 300 mm (12")	#16M (#5) @ 275 mm (1 1")	#16M (#5) @ 225 mm (9")	#19M (#6) @ 600 mm (24")	#19M (#6) @ 450 mm (18")	#22M (#7) @ 430 mm (17")
"c" bars	#13M (#4) @ 600 mm (24")	#13M #4) @ 450 mm (18")	#16M (#5) @ 500 mm (20")	#16M (#5) @ 350 mm (14")	#16M (#5) @ 250 mm (10")	#16M (#5) @ 175 mm (7")	#19M (#6) @ 190 mm (7 1/2 ")	#22M (#7) @ 200 mm (8")	#22M (#7) @ 150 mm (6")	#29M (#9) @ 375 mm (15")	#32M (#10) @ 375 mm (15")	#32M (#10) @ 300 mm (12")	#32M (#10) @ 275 mm (1 1")	#32M (#10) @ 225 mm (9")	#32M (#10) @ 200 mm (8")	#36M (#1 1) @ 225 mm (9")	#36M (#1 1) @ 215 mm (8 1/2 ")
"d" bars	#13M (#4) @ 600 mm (24")	#13M #4) @ 450 mm (18")	#16M (#5) @ 500 mm (20")	#16M (#5) @ 350 mm (14")	#16M (#5) @ 250 mm (10")	#19M (#6) @ 350 mm (14")	#22M (#7) @ 380 mm (15")	#25M (#8) @ 400 mm (16")	#22M (#7) @ 300 mm (12")	#25M (#8) @ 375 mm (15")	#29M (#9) @ 375 mm (15")	#29M (#9) @ 300 mm (12")	#29M (#9) @ 275 mm (1 1")	#29M (#9) @ 225 mm (9")	#29M (#9) @ 200 mm (8")	#32M (#10) @ 225 mm (9")	#32M (#10) @ 215 mm (8 1/2 ")
Conc m^3/m (cy/lf)	0.80 (0.32)	0.95 (0.38)	1.10 (0.44)	1.23 (0.49)	1.38 (0.55)	1.53 (0.61)	1.68 (0.67)	1.83 (0.73)	1.98 (0.79)	2.56 (1.02)	2.76 (1.10)	2.96 (1.18)	3.16 (1.26)	3.41 (1.36)	3.64 (1.45)	3.89 (1.55)	4.31 (1.72)
Reinf kg/m (lb/lf)	19 (13)	24 (16)	28 (19)	37 (25)	45 (30)	55 (37)	73 (49)	92 (62)	1 13 (76)	1 09 (73)	134 (90)	155 (104)	183 (123)	210 (1 4 1)	253 (170)	281 (189)	307 (206)

STATE OF CALIFORNIA
DEPARTMENT OF TRANSPORTATION

PIPE CULVERT HEADWALLS, ENDWALLS AND WINGWALLS TYPE A, B AND C

These "Standard Plans for Construction of Local Streets and Roads" contain units in two systems of measurement: International System of Units (SI or "metric") and United States Standard Measures shown in the parentheses ( ) . The measurements expressed in the two systems are not necessarily equal or interchangeable. See the "Foreword" at the beginning of this publication.

SAN BERNARDINO COUNTY FLOOD CONTROL DISTRICT	DATE DEC. , 2007
FONTANA–RIALTO DRAINAGE SYSTEM	SCALE NO SCALE
HEADWALL AND WINGWALL STRUCTURAL DETAILS	FILE NO. 2-104-
CALTRANS STD.– D90B	SHEET NO. S-9

2002 DUAL UNITS STD PLAN D90B

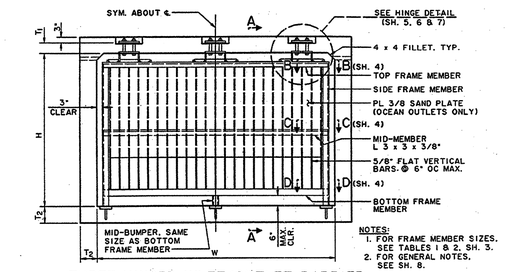

THREE HINGED INLET/OUTLET BARRIER

FOR RCB

NOTES:
1. FOR FRAME MEMBER SIZES, SEE TABLES I & 2, SH. 3.
2. FOR GENERAL NOTES, SEE SH. 8.

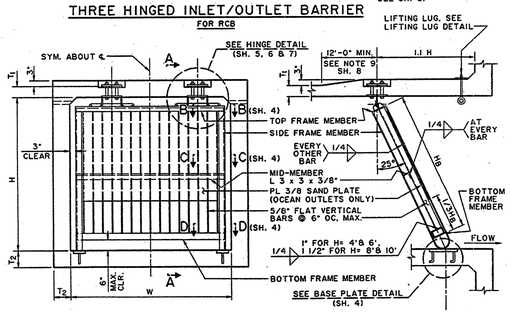

TWO HINGED INLET/OUTLET BARRIER

FOR RCB

SECTION A-A

NOTE:
FOR FRAME MEMBER SIZES, SEE TABLES I & 2, SH. 3.
FOR CONNECTION DETAILS, SEE SH. 4.

AMERICAN PUBLIC WORKS ASSOCIATION – SOUTHERN CALIFORNIA CHAPTER		
PROMULGATED BY THE PUBLIC WORKS STANDARDS INC., GREENBOOK COMMITTEE 1963	SLOPED PROTECTION BARRIER USE WITH STANDARD SPECIFICATIONS FOR PUBLIC WORKS CONSTRUCTION	STANDARD PLAN 360–0 SHEET 1 OF 8

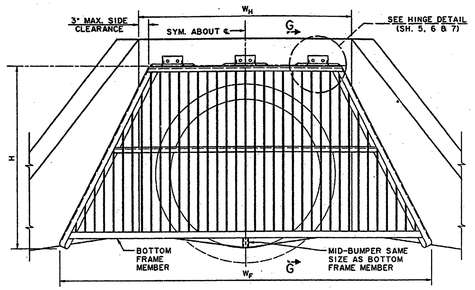

FRONT ELEVATION

NOTES:
1. FOR FRAME MEMBER SIZE, SEE TABLE I, SH. 3.
2. FOR CONNECTION DETAILS SEE SH. 4.

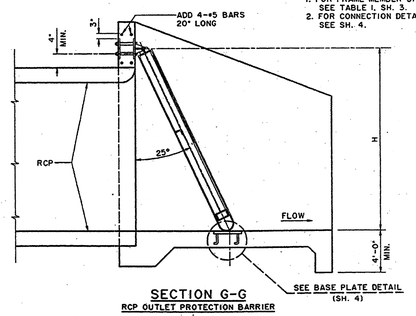

SECTION G-G

RCP OUTLET PROTECTION BARRIER

AMERICAN PUBLIC WORKS ASSOCIATION – SOUTHERN CALIFORNIA CHAPTER		
SLOPED PROTECTION BARRIER		STANDARD PLAN 360–0 SHEET 2 OF 8

TABLE 1: STANDARD INLET/OUTLET, BOX OR PIPE, RECTANGULAR OR HORIZONTAL SHAPED PROTECTION BARRIERS.
NOTE 1: FOR TRAPEZOIDAL SHAPED PROTECTION BARRIERS, USE W_H TO DETERMINE REQUIRED FRAME MEMBER SIZES, AND USE W_F TO DETERMINE REQUIRED FRAME MEMBER SIZES. (FOR W_H AND W_F, SEE SH. 2)

TABLE 1: INLET/OUTLET SLOPED PROTECTION BARRIER

BOX SIZE W x H (FT.)	NO. OF HINGES	HINGE SIZE	VERTICAL BAR SIZE (INCHES)	TOP FRAME MEMBER SIZE	SIDE FRAME MEMBER SIZE	BOTTOM FRAME MEMBER SIZE
4x4	2	12"	1x1/2	C 4x7.25	C 4x7.25	TS 2x2x.250
4x6	2	12"	2x1/2	C 4x7.25	C 4x7.25	TS 2x2x.250
4x8	2	12"	3x1/2	C 5x9	C 5x9	TS 3x3x.250
6x4	2	18"	1x1/2	C 4x7.25	C 4x7.25	TS 2x2x.250
6x6	2	18"	2x1/2	C 4x7.25	C 4x7.25	TS 2.5x2.5x.250
6x8	2	18"	3x1/2	C 5x9	C 5x9	TS 3.5x3.5x.250
6x10	2	18"	4 1/2x1/2	C 6x10.5	C 6x10.5	TS 4.5x4.5x.250
8x4	3	12"	1x1/2	C 4x7.25	C 4x7.25	TS 2x2x.250
8x6	3	12"	2x1/2	C 4x7.25	C 4x7.25	TS 2.5x2.5x.250
8x8	3	12"	3x1/2	C 5x9	C 5x9	TS 3x3x.250
8x10	3	12"	4 1/2x1/2	C 6x10.5	C 6x10.5	TS 4.5x4.5x.250
10x6	3	18"	2x1/2	C 4x7.25	C 4x7.25	TS 2.5x2.5x.250
10x8	3	18"	3x1/2	C 5x9	C 5x9	TS 3.5x3.5x.250
10x10	3	18"	4 1/2x1/2	C 6x10.5	C 6x10.5	TS 4.5x4.5x.250
12x6	3	24"	2x1/2	C 5x9	C 5x9	TS 3x3x.250
12x8	3	24"	3x1/2	C 5x9	C 5x9	TS 3.5x3.5x.250
12x10	3	24"	4 1/2x1/2	C 6x10.5	C 6x10.5	TS 4.5x4.5x.250
14x6	3	24"	2x1/2	C 5x9	C 5x9	TS 3x3x.250
14x8	3	24"	3x1/2	C 6x10.5	C 6x10.5	TS 4x4x.250
14x10	3	24"	4 1/2x1/2	C 7x12.25	C 7x12.25	TS 5x5x.250

TABLE 2: BOX OCEAN OUTLET PROTECTION BARRIERS WITH OR WITHOUT SAND BARRIER PLATE.

TABLE 2: OCEAN OUTLET SLOPED PROTECTION BARRIER

BOX SIZE W x H (FT.)	NO. OF HINGES	HINGE SIZE	VERTICAL BAR SIZE (INCHES)	TOP FRAME MEMBER SIZE	SIDE FRAME MEMBER SIZE	BOTTOM FRAME MEMBER SIZE
4x4	2	12"	2 1/2x5/8	C 5x9	C 5x9	TS 3x3x.250
4x6	2	12"	3 3/4x5/8	C 6x13	C 6x8.2	TS 4x2x.313
4x8	2	12"	5 1/4x5/8	C 8x18.75	C 8x11.5	TS 6x2x.250
6x4	2	18"	2 1/2x5/8	C 6x13	C 6x8.2	TS 4x3x.313
6x6	2	18"	3 3/4x5/8	C 6x13	C 6x8.2	TS 4x4x.500
6x8	2	18"	5 1/4x5/8	C 8x18.75	C 8x11.5	TS 6x4x.375
6x10	2	18"	6 1/2x5/8	C 9x20	C 9x13.4	TS 7x4x.375
8x4	3	12"	2 1/2x5/8	C 5x9	C 5x9	TS 3x3x.250
8x6	3	12"	3 3/4x5/8	C 6x13	C 6x8.2	TS 4x3x.250
8x8	3	12"	5 1/4x5/8	C 8x18.75	C 8x11.5	TS 6x2x.250
8x10	3	12"	6 1/2x5/8	C 9x20	C 9x13.4	TS 7x3x.250
10x6	3	18"	3 3/4x5/8	C 6x13	C 6x8.2	TS 4x4x.313
10x8	3	18"	5 1/4x5/8	C 8x18.75	C 8x11.5	TS 6x4x.313
10x10	3	18"	6 1/2x5/8	C 9x20	C 9x13.4	TS 7x3x.313
12x6	3	24"	3 3/4x5/8	C 7x14.75	C 7x9.8	TS 5x4x.313
12x8	3	24"	5 1/4x5/8	C 8x18.75	C 8x11.5	TS 6x4x.375
12x10	3	24"	6 1/2x5/8	C 9x20	C 9x13.4	TS 7x4x.375
14x6	3	24"	3 3/4x5/8	C 8x18.75	C 8x11.5	TS 6x4x.375
14x8	3	24"	5 1/4x5/8	C 8x18.75	C 8x11.5	TS 6x6x.375
14x10	3	24"	6 1/2x5/8	C 9x20	C 9x13.4	TS 7x5x.500

AMERICAN PUBLIC WORKS ASSOCIATION – SOUTHERN CALIFORNIA CHAPTER		
SLOPED PROTECTION BARRIER		STANDARD PLAN 360–0 SHEET 3 OF 8

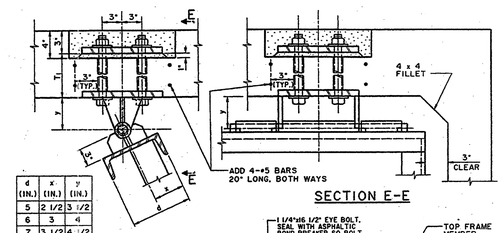

SECTION E-E

d (IN.)	x (IN.)	y (IN.)
5	2 1/2	3 1/2
6	3	4
7	3 1/2	4 1/2
8	4	5
9	4	5

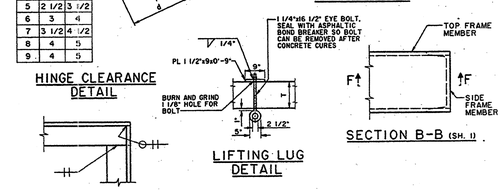

HINGE CLEARANCE DETAIL

LIFTING LUG DETAIL

SECTION B-B (SH. 1)

SECTION F-F

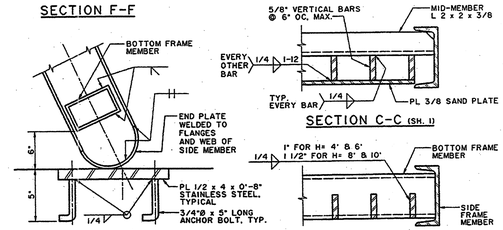

BASE PLATE DETAIL (SH. 1 & 2)

SECTION C-C (SH. 1)

SECTION D-D (SH. 1)

AMERICAN PUBLIC WORKS ASSOCIATION – SOUTHERN CALIFORNIA CHAPTER		
SLOPED PROTECTION BARRIER		STANDARD PLAN 360–0 SHEET 4 OF 8

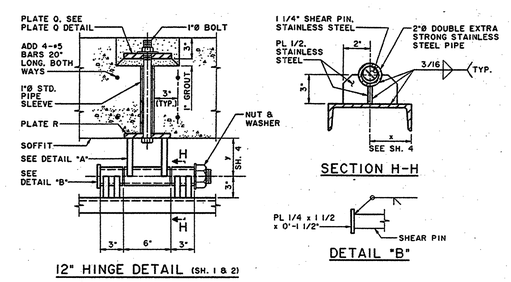

12" HINGE DETAIL (SH. 1 & 2)

SECTION H-H

DETAIL "B"

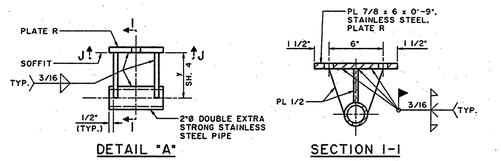

DETAIL "A"

SECTION I-I

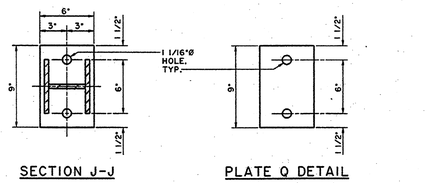

SECTION J-J

PLATE Q DETAIL

AMERICAN PUBLIC WORKS ASSOCIATION – SOUTHERN CALIFORNIA CHAPTER		
SLOPED PROTECTION BARRIER		STANDARD PLAN 360–0 SHEET 5 OF 8

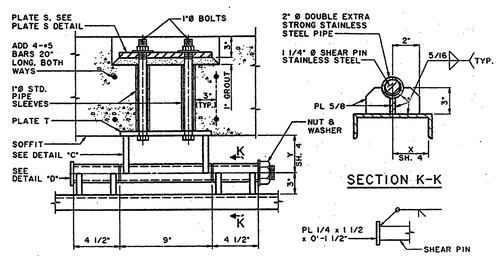

18" HINGE DETAIL (SH. 1 & 2)

SECTION K-K

DETAIL "D"

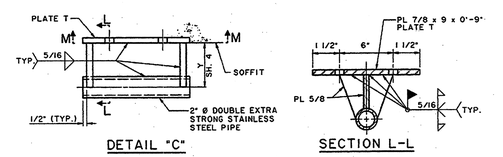

DETAIL "C"

SECTION L-L

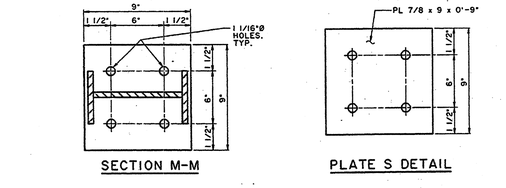

SECTION M-M

PLATE S DETAIL

AMERICAN PUBLIC WORKS ASSOCIATION – SOUTHERN CALIFORNIA CHAPTER		
SLOPED PROTECTION BARRIER		STANDARD PLAN 360–0 SHEET 6 OF 8

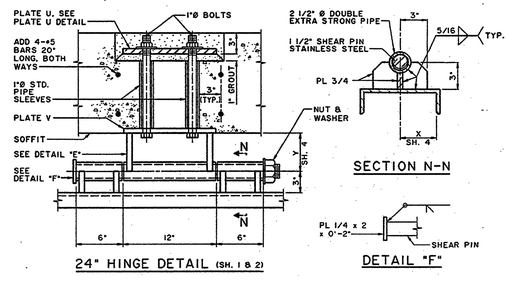

24" HINGE DETAIL (SH. 1 & 2)

SECTION N-N

DETAIL "F"

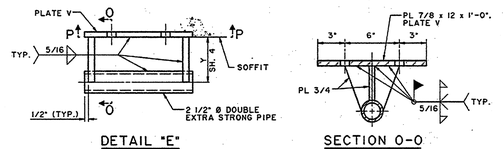

DETAIL "E"

SECTION O-O

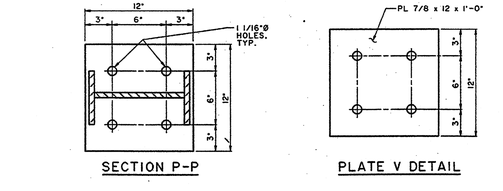

SECTION P-P

PLATE V DETAIL

AMERICAN PUBLIC WORKS ASSOCIATION – SOUTHERN CALIFORNIA CHAPTER		
SLOPED PROTECTION BARRIER		STANDARD PLAN 360–0 SHEET 7 OF 8

NOTES

1. WHENEVER RCB SIZE FALLS BETWEEN SIZES SHOWN ON THE TABLE, THE NEXT LARGER SIZE SHALL BE USED.
2. ALL FRAME MEMBERS SHALL BE ASTM A 36 STEEL OR BETTER.
3. ALL HINGE ASSEMBLIES AND BASE PLATES SHALL BE STAINLESS STEEL.
4. THE CONTRACTOR SHALL MAKE ANY NECESSARY MODIFICATIONS TO ALLOW FOR THE SIMPLE REMOVAL OR INSERTION OF HINGE PINS IN ORDER TO INSTALL OR REMOVE THE PROTECTION BARRIER. ENDS OF HINGE PINS SHALL BE THREADED IN ORDER THAT NUTS AND LOCK WASHERS WILL BE FLUSH WITH THE HINGE PIPE. THREADS BEYOND THE NUT FACE SHALL BE DAMAGED TO PREVENT REMOVAL.
5. ALL FRAME MEMBERS SHALL BE GALVANIZED AFTER FABRICATION.
6. IF FIELD WELDS ARE NECESSARY, GALVICON, GALVALLOY OR AGENCY APPROVED EQUAL SHALL BE USED FOR COATING.
7. MID-BUMPER SHALL BE USED FOR 3 HINGED BARRIERS.
8. ANY DEVIATIONS OR MODIFICATIONS TO THIS STANDARD SHALL BE APPROVED BY THE AGENCY.
9. AT OCEAN OUTLETS OR WHEREVER THE TOP SLAB SERVES AS A PUBLIC WALKWAY, THE TOP SLAB THICKNESS SHALL BE INCREASED BY 3" IN ORDER TO PROVIDE A RECESS FOR THE HINGE TOP PLATE. THE RECESS SHALL BE BACKFILLED WITH GROUT AND SMOOTHED AS SHOWN.
10. PROTECTION BARRIERS FOR RCB CONDUITS SHALL BE SLOPED TO SWING OPEN IN THE DIRECTION OF FLOW.
11. MEMBERS SHALL BE SELECTED FROM TABLE I UNLESS OTHERWISE NOTED.
12. DESIGN LOADS:
    A. INLET/OUTLET: BULKED EFD = 85 PCF
    B. OCEAN OUTLETS:
        1. 1800 PSF @ SAND PLATE AREA
        2. 600 PSF @ LOWER OPEN AREA

AMERICAN PUBLIC WORKS ASSOCIATION – SOUTHERN CALIFORNIA CHAPTER		
SLOPED PROTECTION BARRIER		STANDARD PLAN 360–0 SHEET 8 OF 8

SAN BERNARDINO COUNTY FLOOD CONTROL DISTRICT	DATE DEC. ,2007
FONTANA–RIALTO DRAINAGE SYSTEM	SCALE AS SHOWN
CACTUS BASINS NO. 3	FILE NO. 2–104–
SLOPE PROTECTION BARRIER APWA STANDARD PLAN 360–0	SHEET NO. S–10

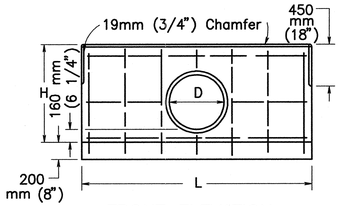

FRONT ELEVATION
SINGLE HEADWALL

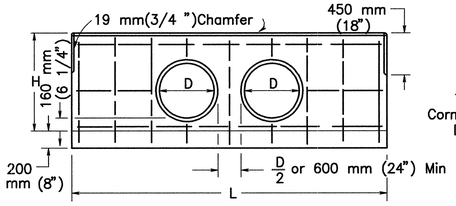

FRONT ELEVATION
DOUBLE HEADWALL

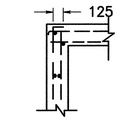

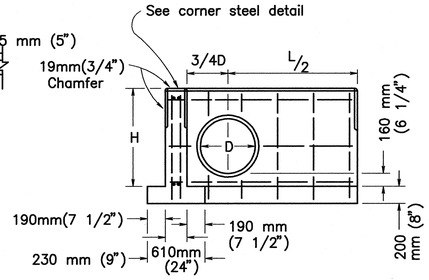

FRONT ELEVATION "L" HEADWALL

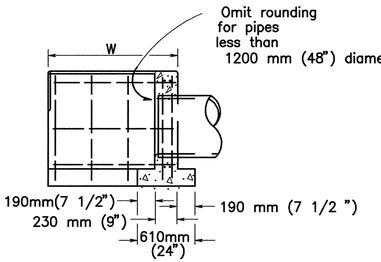

SECTION "L" HEADWALL

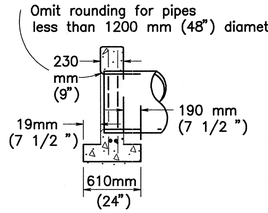

SECTION, SINGLE & DOUBLE HEADWALLS

D	H	SINGLE			DOUBLE		
		L	Steel	Conc	L	Steel	Conc
300 mm (12")	810 mm (32")	1500 mm (5.0')	16 kg (35 lb)	0.45 m^3 (0.60 CY)	2500 mm (8.0')	24 kg (50 lb)	0.74 m^3 (0.94 CY)
375 mm (15")	885 mm (35")	1800 mm (6.0')	18 kg (40 lb)	0.56 m^3 (0.75 CY)	2950 mm (9.5')	28 kg (60 lb)	0.91 m^3 (1.17 CY)
450 mm (18")	960 mm (38")	2100 mm (7.0')	22 kg (50 lb)	0.68 m^3 (0.91 CY)	3250 mm (10.5')	34 kg (75 lb)	1.04 m^3 (1.35 CY)
525 mm (21")	1035 mm (41")	2250 mm (7.5')	26 kg (60 lb)	0.76 m^3 (1.02 CY)	3550 mm (11.5')	40 kg (90 lb)	1.18 m^3 (1.52 CY)
600 mm (24")	1110 mm (44")	2550 mm (8.5')	34 kg (75 lb)	0.90 m^3 (1.20 CY)	3850 mm (12.5')	46 kg (100 lb)	1.32 m^3 (1.72 CY)
675 mm (27")	1185 mm (47")	2850 mm (9.5')	38 kg (85 lb)	1.04 m^3 (1.39 CY)	4300 mm (14.0')	52 kg (115 lb)	1.53 m^3 (2.00 CY)
750 mm (30")	1260 mm (50")	3000 mm (10.0')	40 kg (85 lb)	1.13 m^3 (1.52 CY)	4600 mm (15.0')	54 kg (126 lb)	1.69 m^3 (2.21 CY)
825 mm (33")	1335 mm (53")	3300 mm (11.0')	44 kg (100 lb)	1.29 m^3 (1.73 CY)	4900 mm (16.0')	58 kg (130 lb)	1.86 m^3 (2.42 CY)
900 mm (36")	1410 mm (56")	3600 mm (12.0')	46 kg (105 lb)	1.46 m^3 (1.95 CY)	5200 mm (17.0')	66 kg (145 lb)	2.03 m^3 (2.65 CY)
975 mm (39")	1485 mm (59")	3750 mm (12.5')	58 kg (130 lb)	1.57 m^3 (2.09 CY)	5500 mm (18.0')	78 kg (170 lb)	2.21 m^3 (2.88 CY)
1050 mm (42")	1560 mm (62")	4050 mm (13.5')	62 kg (140 lb)	1.75 m^3 (2.34 CY)	5800 mm (19.0')	84 kg (185 lb)	2.39 m^3 (3.13 CY)
1125 mm (45")	1635 mm (65")	4350 mm (14.5')	66 kg (150 lb)	1.94 m^3 (2.60 CY)	6100 mm (20.0')	88 kg (195 lb)	2.58 m^3 (3.38 CY)
1200 mm (48")	1710 mm (68")	4500 mm (15.0')	70 kg (160 lb)	2.06 m^3 (2.75 CY)	6400 mm (21.0')	90 kg (200 lb)	2.78 m^3 (3.64 CY)
1275 mm (51")	1785 mm (71")	4800 mm (16.0')	80 kg (180 lb)	2.26 m^3 (3.03 CY)	6850 mm (22.5')	102 kg (225 lb)	3.06 m^3 (4.02 CY)
1350 mm (54")	1860 mm (74")	5100 mm (17.0')	84 kg (190 lb)	2.47 m^3 (3.31 CY)	7150 mm (23.5')	108 kg (240 lb)	3.27 m^3 (4.30 CY)

STRAIGHT HEADWALLS

D	H	L/2	LENGTH OF W									
			1000 mm (40")		1450 mm (58")		1900 mm (76")		2350 mm (94")		2800 mm (1 12")	
			Steel	Conc	Steel	Conc	Steel	Conc	Steel	Conc	Steel	Conc
300 mm (12")	810 mm (32")	750 mm (30")	22 kg (50 lb)	0.59 m^3 (0.79 CY)	26 kg (60 lb)	0.73 m^3 (0.98 CY)	---	---	---	---	---	---
375 mm (15")	885 mm (35")	900 mm (36")	24 kg (55 lb)	0.68 m^3 (0.91 CY)	28 kg (65 lb)	0.83 m^3 (1.11 CY)	---	---	---	---	---	---
450 mm (18")	960 mm (38")	1050 mm (42")	28 kg (65 lb)	0.78 m^3 (1.04 CY)	32 kg (75 lb)	0.94 m^3 (1.25 CY)	---	---	---	---	---	---
525 mm (21")	1035 mm (41")	1125 mm (45")	32 kg (75 lb)	0.86 m^3 (1.15 CY)	40 kg (90 lb)	1.02 m^3 (1.36 CY)	---	---	---	---	---	---
600 mm (24")	1110 mm (44")	1275 mm (51")	38 kg (85 lb)	0.96 m^3 (1.29 CY)	44 kg (100 lb)	1.13 m^3 (1.51 CY)	48 kg (110 lb)	1.30 m^3 (1.74 CY)	---	---	---	---
675 mm (27")	1185 mm (47")	1425 mm (57")	40 kg (90 lb)	1.07 m^3 (1.44 CY)	46 kg (105 lb)	1.25 m^3 (1.67 CY)	50 kg (115 lb)	1.43 m^3 (1.91 CY)	---	---	---	---
750 mm (30")	1260 mm (50")	1500 mm (60")	42 kg (95 lb)	1.16 m^3 (1.55 CY)	48 kg (110 lb)	1.34 m^3 (1.80 CY)	52 kg (120 lb)	1.53 m^3 (2.05 CY)	60 kg (135 lb)	1.72 m^3 (2.29 CY)	---	---
825 mm (33")	1335 mm (53")	1650 mm (66")	46 kg (105 lb)	1.28 m^3 (1.71 CY)	52 kg (120 lb)	1.47 m^3 (1.97 CY)	60 kg (135 lb)	1.67 m^3 (2.23 CY)	66 kg (150 lb)	1.86 m^3 (2.48 CY)	---	---
900 mm (36")	1410 mm (56")	1800 mm (72")	48 kg (110 lb)	1.40 m^3 (1.88 CY)	54 kg (125 lb)	1.61 m^3 (2.15 CY)	62 kg (140 lb)	1.81 m^3 (2.41 CY)	68 kg (155 lb)	2.01 m^3 (2.68 CY)	74 kg (170 lb)	2.21 m^3 (2.95 CY)
975 mm (39")	1485 mm (59")	1875 mm (75")	---	---	66 kg (150 lb)	1.71 m^3 (2.28 CY)	74 kg (170 lb)	1.92 m^3 (2.56 CY)	80 kg (185 lb)	2.13 m^3 (2.84 CY)	88 kg (200 lb)	2.33 m^3 (3.12 CY)
1050 mm (42")	1560 mm (62")	2025 mm (81")	---	---	68 kg (155 lb)	1.85 m^3 (2.42 CY)	76 kg (175 lb)	2.07 m^3 (2.76 CY)	84 kg (190 lb)	2.28 m^3 (3.05 CY)	92 kg (210 lb)	2.50 m^3 (3.34 CY)
1125 mm (45")	1635 mm (65")	2175 mm (87")	---	---	---	---	78 kg (180 lb)	2.22 m^3 (2.97 CY)	88 kg (200 lb)	2.45 m^3 (3.27 CY)	94 kg (215 lb)	2.67 m^3 (3.57 CY)
1200 mm (48")	1710 mm (68")	2250 mm (90")	---	---	---	---	84 kg (190 lb)	2.34 m^3 (3.13 CY)	94 kg (216 lb)	2.57 m^3 (3.44 CY)	100 kg (230 lb)	2.81 m^3 (3.75 CY)
1275 mm (51")	1785 mm (71")	2400 mm (96")	---	---	---	---	---	---	96 kg (220 lb)	2.75 m^3 (3.67 CY)	102 kg (235 lb)	2.98 m^3 (3.99 CY)
1350 mm (54")	1860 mm (74")	2550 mm (102")	---	---	---	---	---	---	102 kg (235 lb)	2.92 m^3 (3.91 CY)	110 kg (250 lb)	3.17 m^3 (4.24 CY)

"L" HEADWALLS

CIRCULAR PIPE CULVERT HEADWALLS

NOTES

1. No deduction made in quantities for thickness of pipe walls.
2. All reinforcing steel #13M (#4) bars. All vertical and horizontal tie bars 450 mm (18") maximum spacing.
3. Length of wall "W" may be varied to suit conditions encountered in the field, and straight line interpolation may be used to calculate quantities.
4. Quantities are for design purposes only.
5. Cable railing to be installed on top of headwall when shown on Project Plans. See Standard Plan B11-47 for cable railing details.

STATE OF CALIFORNIA
DEPARTMENT OF TRANSPORTATION

PIPE HEADWALLS

These "Standard Plans for Construction of Local Streets and Roads" contain units in two systems of measurement: International System of Units (SI or "metric") and United States Standard Measures shown in the parentheses ( ) . The measurements expressed in the two systems are not necessarily equal or interchangeable. See the "Foreword" at the beginning of this publication.

NO SCALE

SAN BERNARDINO COUNTY FLOOD CONTROL DISTRICT

FONTANA-RIALTO DRAINAGE SYSTEM

PIPE HEADWALL
CALTRANS STD.- D89

DATE DEC. , 2007
SCALE NO SCALE
FILE NO. 2-104-
SHEET NO. S-11

2002 DUAL UNITS STD PLAN D89

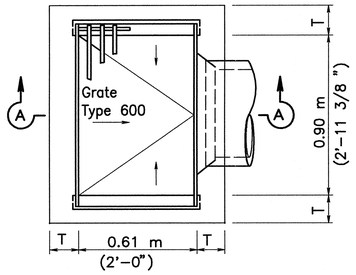

TYPE G1

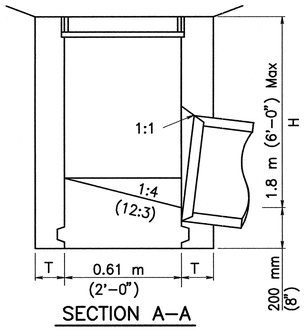

SECTION A-A

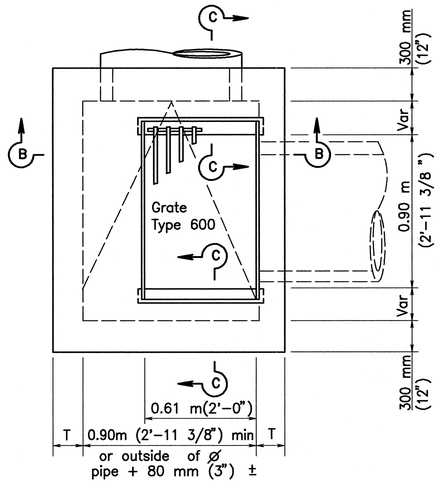

TYPE G2

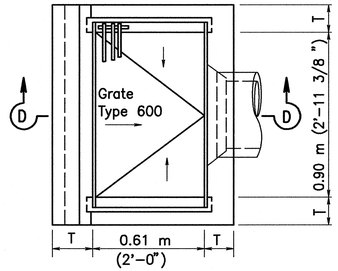

TYPE G3

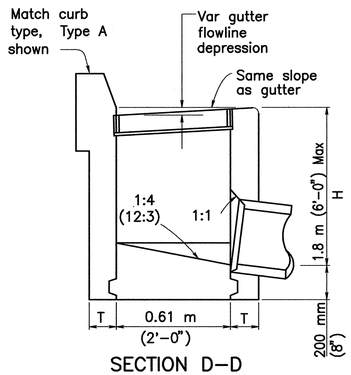

SECTION D-D

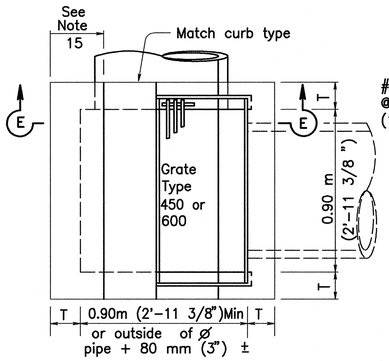

TYPE G4

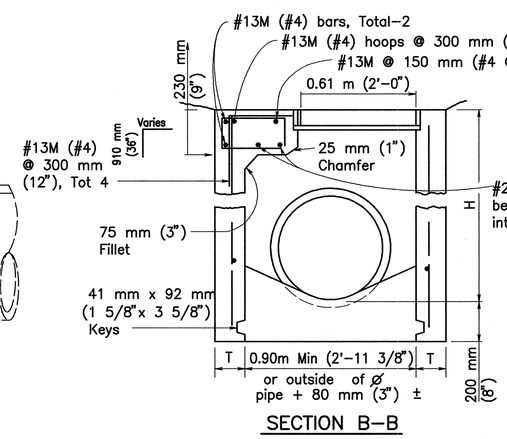

SECTION B-B

TYPE G5

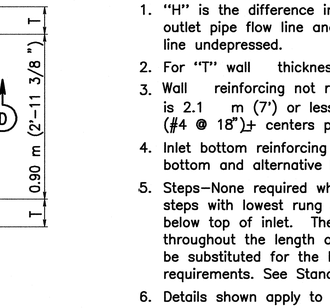

TYPE G6

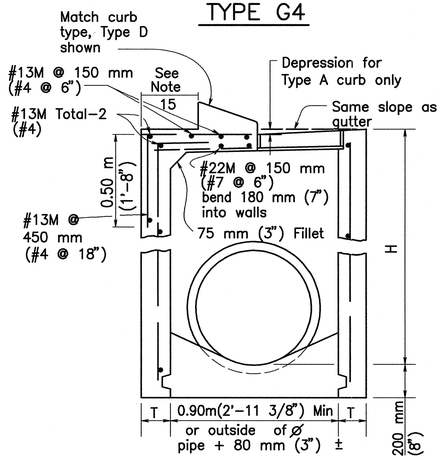

SECTION E-E

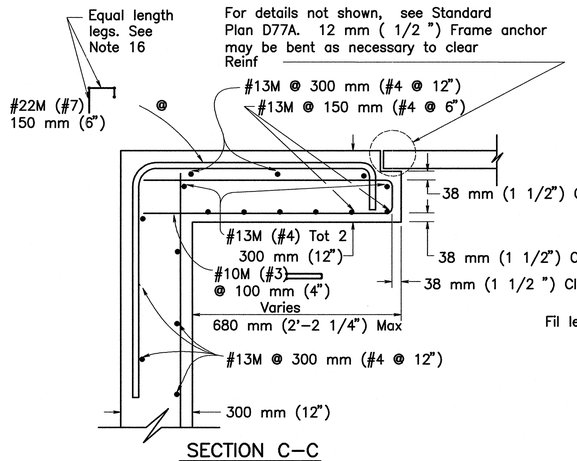

SECTION C-C

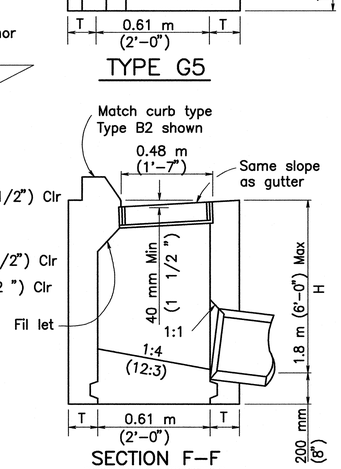

SECTION F-F

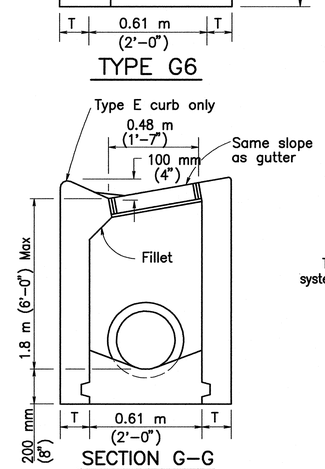

SECTION G-G

NOTES:

1. "H" is the difference in elevation between the outlet pipe flow line and the normal gutter grade line undepressed.
2. For "T" wall thickness, see Table A below.
3. Wall reinforcing not required when "H" is 2.5 m (8') or less and the unsupported width or length is 2.1 m (7') or less. Walls exceeding these limits shall be reinforced with #13M bars @ 450 mm+ (#4 @ 18")± centers placed 40 mm (1 1/2 ") clear to inside of box unless otherwise shown.
4. Inlet bottom reinforcing not required. See Standard Plan D74C for alternative reinforced bottom and alternative half round bottom.
5. Steps-None required where "H" is less than 0.75 m (30"). Where "H" is 0.75 m (30") or more, install steps with lowest rung 300 mm (12") above the floor and highest rung not more than 150 mm (6") below top of inlet. The distance between steps shall not exceed 300 mm (12") and shall be uniform throughout the length of the wall . Place steps in the wall without an opening. Step inserts may be substituted for the bar steps. Step inserts shall comply with State Industrial Safety requirements. See Standard Plan D74C for step details.
6. Details shown apply to both metal and concrete pipe.
7. Pipe(s) can be placed in any wall .
8. Curb section shall match adjacent curb.
9. Basin floors shall have wood trowel finish and a minimum slope of 1:4 (12:3) from all directions toward outlet pipe.
10. Galvanizing - See Standard Specifications or Special Provisions.
11. Cast-in-place or Precast alternative is optional with contractor, See Standard Specifications.
12. Set inlet so that grate bars are parallel to direction of principal surface flow.
13. See Standard Plans D77A and D77B for grate and frame details and masses (weights) of miscellaneous iron and steel.
14. See Standard Plan D78 for gutter depression details.
15. This dimension will vary with different grates, curbs types, box width and wall thickness.
16. Bar may be rotated as necessary to clear opening.

TABLE A

CONCRETE QUANTITIES

Type	H=0.90 m (3'-0") to 2.50 m (8'-0") (T=150 mm (6"))		H=2.51 m (8'-1") to 6.00 m (20'-0") (T=200 mm (8"))	
	H=0.90 m (3'- 0") m³(CY)	Additional PCC per meter (foot) m³(CY)	H=2.51 m (8'-1") m³(CY)	Additional PCC per meter (foot) m³(CY)
G-1	0.69 (0.95)	0.55 (0.220)	(1)	(1)
G-2*	1.31 (1.74)	0.99 (0.395)	3.32 (4.28)	1.14 (0.454)
G-3	0.75 (1.03)	0.55 (0.220)	(1)	(1)
G-4* (Type 600)	0.93 (1.27)	0.63 (0.257)	2.67 (3.48)	0.88 (0.360)
G-4* (Type 450)	0.95 (1.30)	0.63 (0.257)	2.69 (3.50)	0.88 (0.360)
G-5	0.75 (1.02)	0.55 (0.220)	(1)	(1)
G-6	0.76 (1.04)	0.55 (0.220)	(1)	(1)

(1) Maximum al lowable height 1.8 m (6'-0"). Table based on 200 mm (8") floor slab. No deductions are to be made to these quantities because of pipe openings, different floor alternatives or different curb types. * Quantities for type G-2 and G-4 inlets based on the minimum interior dimensions shown.

STATE OF CALIFORNIA
DEPARTMENT OF TRANSPORTATION

DRAINAGE INLETS

These "Standard Plans for Construction of Local Streets and Roads" contain units in two systems of measurement: International System of Units (SI or "metric") and United States Standard Measures shown in the parentheses ( ) . The measurements expressed in the two systems are not necessarily equal or interchangeable. See the "Foreword" at the beginning of this publiccation.

NO SCALE

SAN BERNARDINO COUNTY FLOOD CONTROL DISTRICT	DATE DEC. , 2007
FONTANA-RIALTO DRAINAGE SYSTEM	SCALE NO SCALE
DRAINAGE INLETS CALTRANS STD.- D73	FILE NO. 2-104-
	SHEET NO. S-12

2002 DUAL UNITS STD PLAN D73

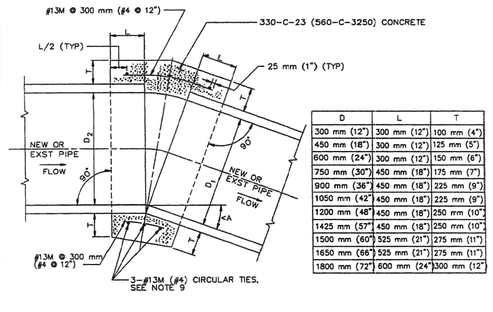

D	L	T
300 mm (12")	300 mm (12")	100 mm (4")
450 mm (18")	300 mm (12")	125 mm (5")
600 mm (24")	300 mm (12")	150 mm (6")
750 mm (30")	450 mm (18")	175 mm (7")
900 mm (36")	450 mm (18")	225 mm (9")
1050 mm (42")	450 mm (18")	225 mm (9")
1200 mm (48")	450 mm (18")	250 mm (10")
1425 mm (57")	450 mm (18")	250 mm (10")
1500 mm (60")	525 mm (21")	275 mm (11")
1650 mm (66")	525 mm (21")	275 mm (11")
1800 mm (72")	600 mm (24")	300 mm (12")

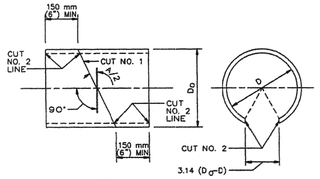

DETAIL "A" (SEE NOTE 10)
SONO-TUBE, OR EQUAL, INTERIOR FORM

CUT NO. 1: SAW THE TUBE AT AN ANGLE OF A/2 WITH THE TRANSVERSE PLANE. REVERSE ONE SECTION AND TAPE BOTH SECTIONS TOGETHER FORMING THE DEFLECTION ANGLE A.
CUT NO. 2: SAW THE TUBE LONGITUDINALLY REMOVING A STRIP 3.14 (D-D) WIDE ON THE SIDE OPPOSITE THE OPEN JOINT. BEND THE ENDS OF THE CUT TOGETHER AND INSERT THE TUBE IN THE PIPE.

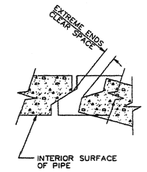

DETAIL "B"
TYPICAL JOINT FOR
REINFORCED CONCRETE PIPE

STANDARD PLANS FOR PUBLIC WORKS CONSTRUCTION		
PROMULGATED BY THE PUBLIC WORKS STANDARDS INC. GREENBOOK COMMITTEE 1992 REV. 1996, 1997, 1999	CONCRETE COLLAR FOR RCP 300 mm (12") THROUGH 1800 mm (72") USE WITH STANDARD SPECIFICATIONS FOR PUBLIC WORKS CONSTRUCTION	STANDARD PLAN METRIC 380-3 SHEET 1 OF 2

NOTES

1. A CONCRETE COLLAR IS REQUIRED WHERE THE CHANGE IN GRADE EXCEEDS 10%.
2. FOR CURVE JOINTS (SEE DETAIL B, SHEET 1)
   IF THE EXTREME ENDS OF THE PIPE LEAVE A CLEAR SPACE THAT IS GREATER THAN 25 mm (1"), BUT IS LESS THAN 75 mm (3") A CONCRETE COVER IS REQUIRED IN ACCORDANCE WITH SSPWC 306-1.2.4.
   IF THE EXTREME ENDS OF THE PIPE LEAVE A CLEAR SPACE THAT IS EQUAL TO OR GREATER THAN 75 mm (3"), BUT LESS THAN 150 mm (6"), A CONCRETE COLLAR IS REQUIRED. IF THE CLEAR SPACE IS 150 mm (6") OR GREATER, A TRANSITION STRUCTURE IS REQUIRED.
3. CONCRETE COLLAR SHALL NOT BE USED FOR A SIZE CHANGE ON THE MAIN LINE.
4. CONNECTOR PIPES
   A. WHERE PIPES OF DIFFERENT DIAMETERS ARE JOINED WITH A CONCRETE COLLAR, L AND T SHALL BE THOSE OF THE LARGER PIPE. D=D_1 OR D_2, WHICHEVER IS GREATER.
   B. WHEN D_1 IS EQUAL TO OR LESS THAN D_2, JOIN INVERTS AND WHEN D_1 IS GREATER THAN D_2, JOIN SOFFITS.
5. FOR PIPE LARGER THAN 1800 mm (72") SPECIAL COLLAR DETAILS ARE REQUIRED.
6. FOR PIPE SIZE NOT LISTED USE NEXT SIZE LARGER.
7. REINFORCEMENT SHALL CONFORM TO ASTM A 615 M (A 615) GRADE 300 (40).
8. WHERE REINFORCING IS REQUIRED THE DIAMETER OF THE CIRCULAR TIES SHALL BE D+(2X WALL THICKNESS) + T.
9. REINFORCING SHALL BE USED WHERE THE PIPE DIAMETER IS GREATER THAN 525 mm (21") AND ON ALL PIPES WHERE THE SPACES BETWEEN THE EXTREME OUTER ENDS IS 75 mm (3") OR LARGER.

CIRCULAR TIES:

PIPE DIAMETER	NO. OF CIRCULAR TIES
525 mm (21") OR LESS	3
600 mm (24") TO 750 mm (30")	3
825 mm (33") TO 1425 mm (57")	4
1500 mm (60") TO 1800 mm (72")	5

WHERE THE SPACE BETWEEN PIPE ENDS EXCEEDS 75 mm (3"), THE NUMBER OF CIRCULAR TIES SHALL BE INCREASED TO MAINTAIN AN APPROXIMATE SPACING OF 150 mm (6") O.C.

10. WHERE THE PIPE IS 525 mm (21") OR LESS IN DIAMETER AN INTERIOR FORM OF UNSEALED SONO-TUBE OR EQUAL SHALL BE USED TO PROVIDE A SMOOTH INTERIOR JOINT. THE PAPER FORM MAY BE LEFT IN PLACE (SEE DETAIL A). WHEN THE PIPE IS 600 mm (24") OR LARGER A REMOVABLE INTERIOR FORM SHALL BE USED OR THE INTERIOR JOINT SHALL BE COMPLETELY FILLED WITH MORTAR AND NEATLY POINTED.

STANDARD PLANS FOR PUBLIC WORKS CONSTRUCTION	STANDARD PLAN METRIC
CONCRETE COLLAR FOR RCP 300 mm (12") THROUGH 1800 mm (72")	380-3 SHEET 2 OF 2

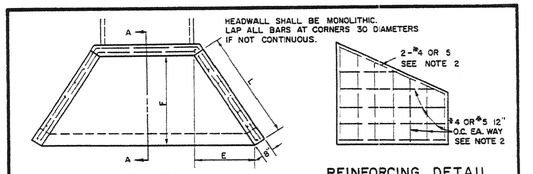

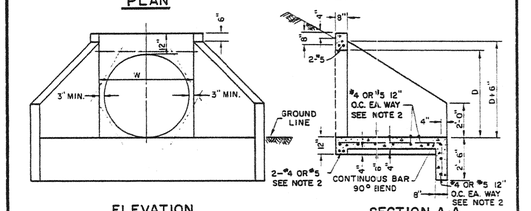

DIMENSIONS				
PIPE DIAM	L	E	F	W
24"	4'-9"	2'-8"	4'-0"	2'-6"
30"	5'-5"	3'-0"	4'-6"	3'-0"
36"	6'-0"	3'-4"	5'-0"	3'-8"
42"	6'-7"	3'-8"	5'-6"	4'-2"
48"	7'-3"	4'-0"	6'-0"	4'-10"
54"	8'-2"	4'-6"	6'-9"	5'-4"

NOTES:

1. HEADWALL SHALL BE CONSTRUCTED OF CLASS A CONCRETE.
2. REINFORCING STEEL SHALL BE NO. 4 BARS FOR "W" UP TO 60". ABOVE "W"=60" NO. 5 BARS SHALL BE USED. 2" MIN CLEARANCE.30 DIAMETER LAP. ALL STEEL.
3. ADJACENT SLOPES SHALL BE 1½ TO 1 OR FLATTER.
4. MULTIPLE PIPES TO BE SET WITH LONGITUDINAL CENTERS 1 2/3 DIAMETERS APART.
5. ALL EXPOSED CORNERS TO BE ROUNDED 3/4" RADIUS.
6. W SHALL BE INCREASED WHEN MULTIPLE PIPES OR PIPES ON SKEW ARE USED.

SAN BERNARDINO COUNTY ROAD DEPARTMENT			
DATE: S.B.C. 7-76	M. A. Nicholas COUNTY ENGINEER	HEADWALL WING - TYPE	209

SAN BERNARDINO COUNTY FLOOD CONTROL DISTRICT	DATE DEC., 2007
FONTANA-RIALTO DRAINAGE SYSTEM CONCRETE COLLAR APWA STD. SP. 380-3 & HEADWALL WING-TYPE S.B.C. STD. 209	SCALE NO SCALE FILE NO. 2-104- SHEET NO. S-13

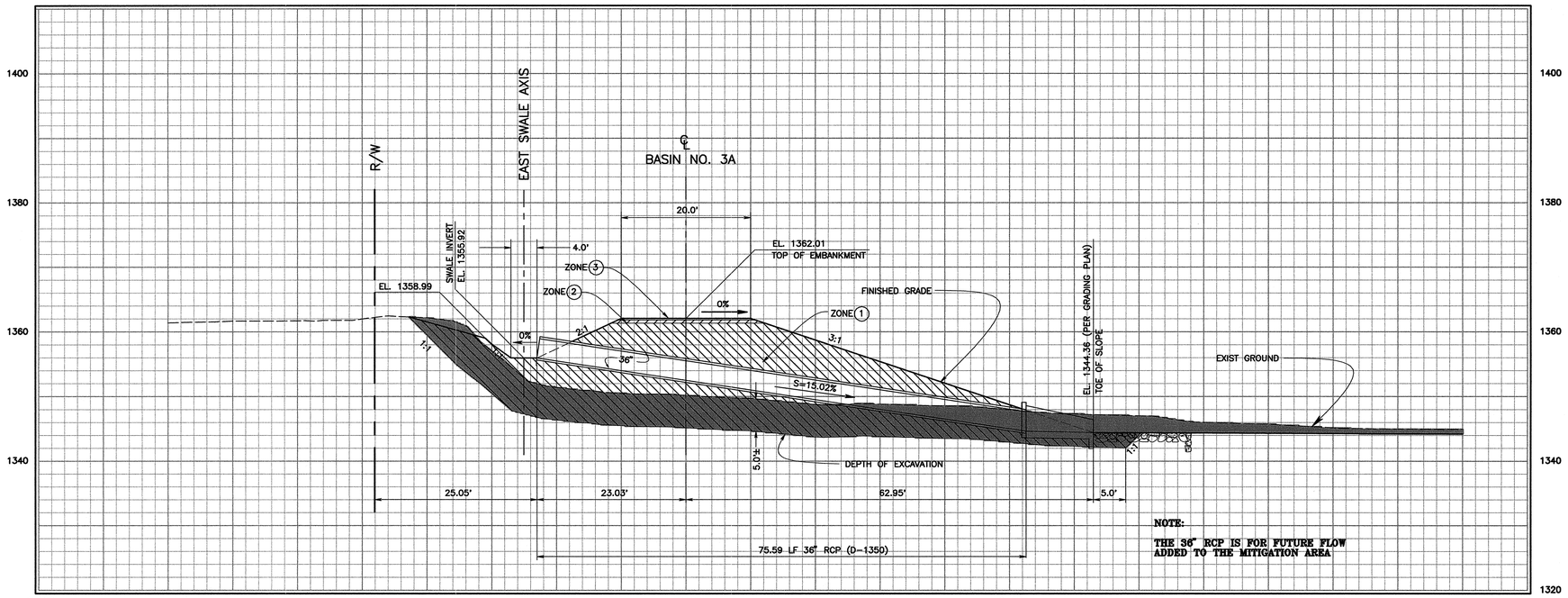

PROFILE – 36" RCP

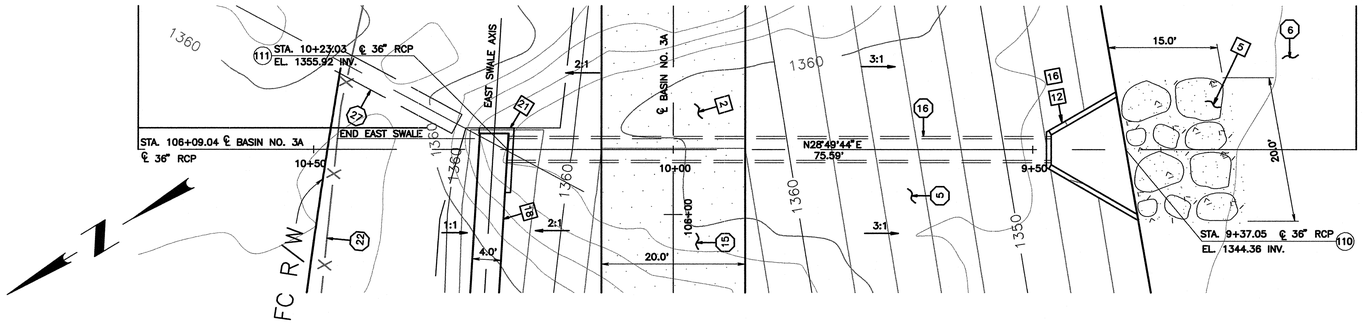

PLAN – 36" RCP

PROJECT COORDINATES				
	NORTH	EAST	ELEVATION	DESCRIPTION
(110)	1,867,413.41	6,747,767.65	1344.36 INV	STA. 9+37.05 ℄ 36" RCP
(111)	1,867,488.74	6,747,809.11	1355.92 INV	STA.10+23.03 ℄ 36" RCP

SCALE 1"=10'
0 10 20 30

CONSTRUCTION CALLOUTS:

- 2 3" AC PVMT ROAD SECTION PER (STD)
- 5 CONCRETED SPLASH PAD PER (STD)
- 12 HEADWALL WING-TYPE PER SBC STD. DRWG. 209 (STD)
- 16 SLOPED PROTECTION BARRIER PER APWA SP 360-0 (STD)
- 18 4' WIDE EAST EARTHEN SWALE PER (SD)
- 21 36" RCP 'L' HEADWALL PER CALTRANS SP D89 (STD)

CONSTRUCTION NOTES:

(5) CONSTRUCT EAST AND WEST EMBANKMENTS FOR BASIN NO. 3A AND HABITAT RESTORATION AREA, SOUTH OF BASIN NO. 3 PER PLAN ON SHEET C-2, PROFILE ON SHEETS P-4 & P-5, SECTIONS ON SHEETS X-21 TO X-23 & X-26 TO X-30 AND SURVEY CONTROL DATA ON SHEET G-2.

(6) CONSTRUCT HABITAT RESTORATION AREA SOUTH EAST OF CACTUS BASIN NO. 3 PER PLAN ON SHEET C-2, PROFILE ON SHEETS P-4 & P-5, SECTIONS ON SHEET X-25 TO X-32, AND SURVEY CONTROL DATA ON SHEET G-2.

(15) CONSTRUCT WEST AND EAST ACCESS ROAD PER PLAN, TYPICAL SECTIONS ON SHEETS C-2 TO C-4, AND SURVEY CONTROL DATA ON SHEETS G-2 TO G-4.

(16) CONSTRUCT APPROX. 76 LINEAR FEET OF 36" RCP PER PLAN AND DETAILS ON SHEET SD-1 (D-LOAD PER PROFILE)

(22) PROTECT IN PLACE EXISTING BOUNDARY CHAIN LINK FENCE

(27) REMOVE AND DISPOSE EXISTING 36" CMP

MATERIAL ZONES:

ZONE (1) MIXED, BORROW FROM BASIN EXCAVATION, 93% RELATIVE COMPACTION
ZONE (2) CLASS 2 AGGREGATE BASE, 6" DEEP
ZONE (3) 3" AC PAVEMENT (ON 6" OF ZONE 2, 95% RELATIVE COMPACTION)
ZONE (5) CONCRETED ROCK SPLASH PAD, FACING CLASS, METHOD 'A' PLACEMENT

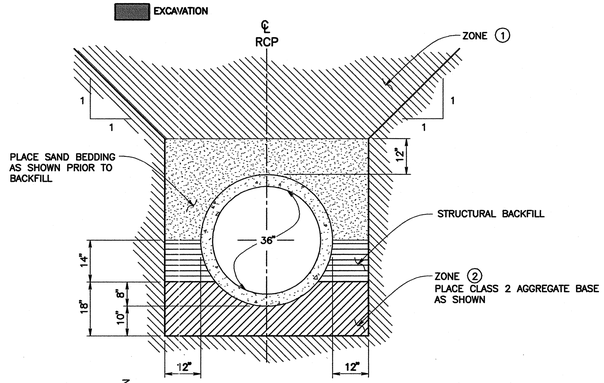

36" RCP PIPE BEDDING DETAIL
SCALE 1"=2'

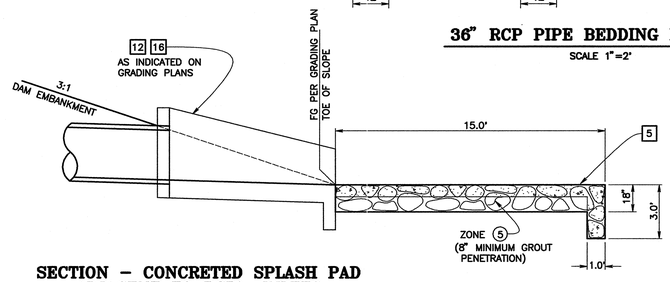

SECTION – CONCRETED SPLASH PAD ADJACENT TO RCP's INLETS
SCALE 1"=4'

REGISTERED PROFESSIONAL ENGINEER JAMES PATRICK CONCIUK No. 41807 Exp 3/31/08 CIVIL STATE OF CALIFORNIA

SAN BERNARDINO COUNTY FLOOD CONTROL DISTRICT 1939 CALIFORNIA

REVISIONS			
MARK	DATE	DESCRIPTION	BY:

SUBMITTED BY:
CHIEF, ENGINEERING DIVISION DATE
RECOMMENDED BY:
ASSIST. FLOOD CONTROL ENGINEER DATE
APPROVED BY:
FLOOD CONTROL ENGINEER DATE

PROJ. ENGR.	DES. BY:	REV'D BY:	DRAWN BY:
T.R.	S.F.B./D.J.N.	J.B.	S.F.B./D.J.N.

SAN BERNARDINO COUNTY FLOOD CONTROL DISTRICT
FONTANA-RIALTO DRAINAGE SYSTEM
CACTUS BASIN NO. 3
36" RCP INLET TO HABITAT RESTORATION AREA

DATE DEC. , 2007
SCALE AS SHOWN
FILE NO. 2-104-
SHEET NO. SD-1

PROFILE – 24" RCP

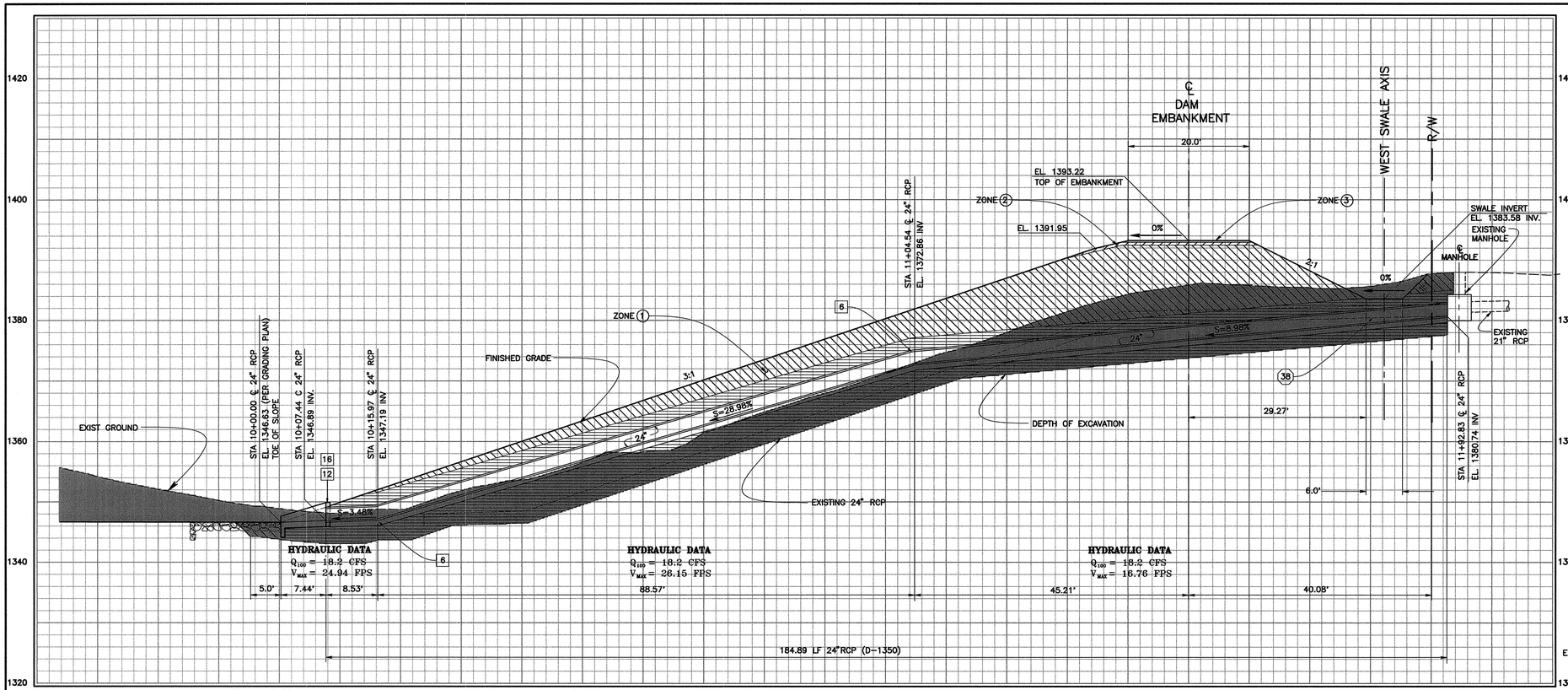

PLAN – 24" RCP

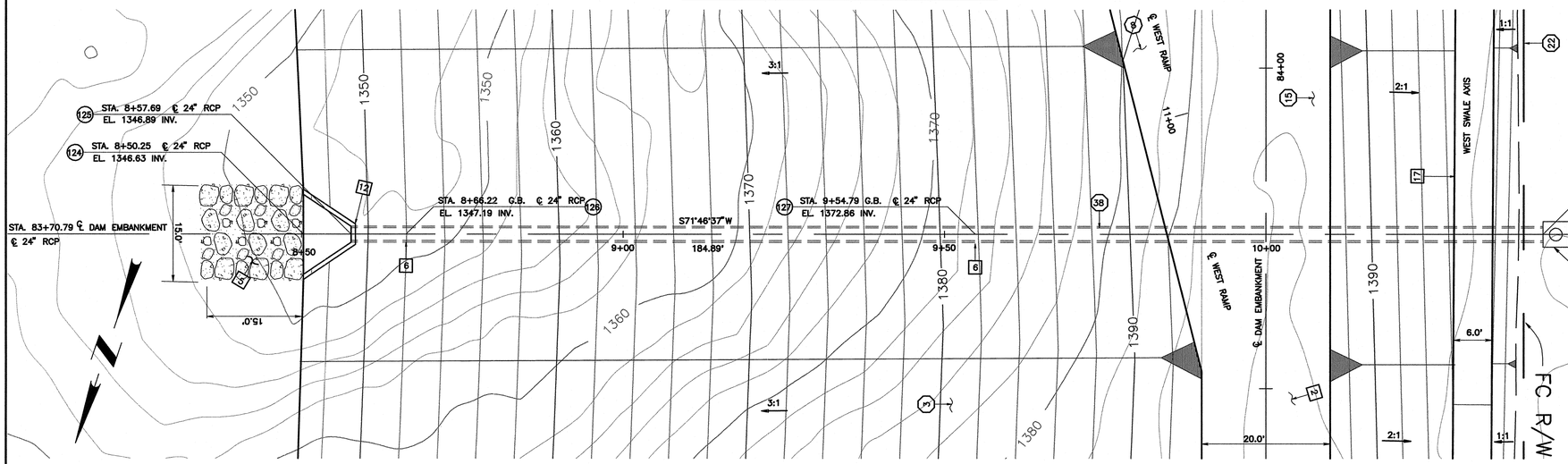

PROJECT COORDINATES				
	NORTH	EAST	ELEVATION	DESCRIPTION
124	1,868,796.37	6,746,536.96	1346.63 INV	STA. 8+50.25 ℄ 24" RCP
125	1,868,794.04	6,746,529.89	1347.19 INV	STA. 8+57.69 BEGIN 24" RCP
126	1,868,791.37	6,746,521.78	1347.19 INV	STA. 8+66.22 G.B. ℄ 24" RCP
127	1,868,763.67	6,746,437.66	1372.86 INV	STA. 9+54.79 G.B. ℄ 24" RCP
128	1,868,736.06	6,746,353.80	1380.74 INV	STA.10+43.08 END 24" RCP

SCALE 1"=10'
0 10 20 30

CONSTRUCTION CALLOUTS:

- 2 3" AC PVMT ROAD SECTION PER (STD)
- 5 CONCRETED SPLASH PAD PER (STD)
- 6 CONCRETE COLLAR PER APWA SP 380-3 (STD)
- 12 HEADWALL WING-TYPE PER S.B.C. STD. 209 (STD)
- 16 SLOPED PROTECTION BARRIER PER APWA SP 360-0 (STD)
- 17 6' WIDE WEST EARTHEN SWALE PER (STD)

CONSTRUCTION NOTES:

(3) CONSTRUCT EAST AND WEST EMBANKMENTS FOR NORTH HALF OF BASIN NO. 3 PER PLAN ON SHEET C-4 , PROFILE ON SHEETS P-1 & P-3, SECTIONS ON SHEETS X-1 TO X-5 & X-16 TO X-20, AND SURVEY CONTROL DATA ON SHEET G-4

(8) CONSTRUCT WEST MAINTENANCE ACCESS RAMP FOR BASIN NO. 3 PER PLAN ON SHEETS C3 & C-4, PROFILE ON SHEET P-1, TYPICAL SECTION ON SHEET C-4, AND SURVEY CONTROL DATA ON SHEETS G-3 & G-4.

(15) CONSTRUCT WEST AND EAST ACCESS ROAD PER PLAN, TYPICAL SECTIONS ON SHEETS C-2 TO C-4, AND SURVEY CONTROL DATA ON SHEETS G-2 TO G-4.

(22) PROTECT IN PLACE EXISTING BOUNDARY CHAIN LINK FENCE

(38) BREAK AND REPLACE EXISTING 24" RCP PER PLAN, PROFILE ON SHEET SD-2, SECTION ON SHEET SD-2 AND SURVEY CONTROL DATA ON SHEET G-4.

MATERIAL ZONES:

ZONE (1) MIXED, BORROW FROM BASIN EXCAVATION, 93% RELATIVE COMPACTION
ZONE (2) CLASS 2 AGGREGATE BASE, 6" DEEP
ZONE (3) 3" AC PAVEMENT (ON 6" OF ZONE 2, 95% RELATIVE COMPACTION)
ZONE (5) CONCRETED ROCK SPLASH PAD, FACING CLASS, METHOD 'B' PLACEMENT

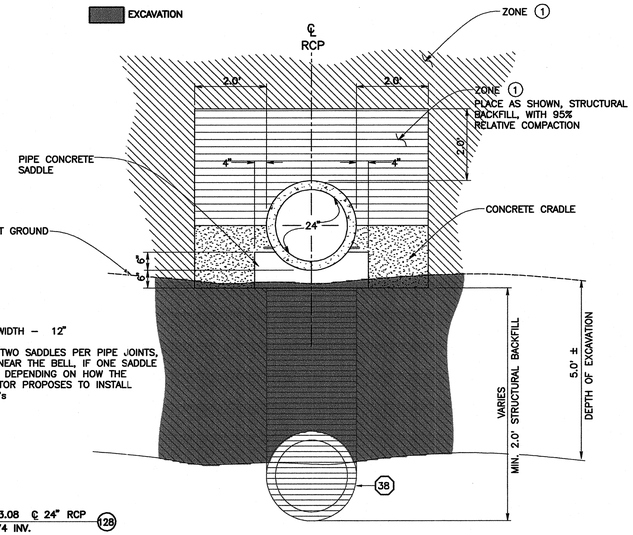

NOTES:

1 SADDLE WIDTH – 12"

2 ONE OR TWO SADDLES PER PIPE JOINTS, PLACED NEAR THE BELL, IF ONE SADDLE IS USED, DEPENDING ON HOW THE CONTRACTOR PROPOSES TO INSTALL THE RCP's

24" RCP PIPE BEDDING DETAIL
SCALE 1"=2'

SECTION – CONCRETED SPLASH PAD ADJACENT TO RCP's INLETS
SCALE 1"=4'

REGISTERED PROFESSIONAL ENGINEER
JAMES PATRICK BORCHUK
No. 41807
Exp. 3/31/08
CIVIL
STATE OF CALIFORNIA

SAN BERNARDINO COUNTY FLOOD CONTROL DISTRICT 1939 CALIFORNIA

REVISIONS

MARK	DATE	DESCRIPTION	BY:

SUBMITTED BY:
CHIEF, ENGINEERING DIVISION DATE
RECOMMENDED BY:
ASSIST. FLOOD CONTROL ENGINEER DATE
APPROVED BY:
FLOOD CONTROL ENGINEER DATE

PROJ. ENGR.	DES. BY:	REV'D BY:	DRAWN BY:
T.R.	S.F.B./D.J.N.	J.B.	S.F.B./D.J.N.

SAN BERNARDINO COUNTY FLOOD CONTROL DISTRICT

FONTANA-RIALTO DRAINAGE SYSTEM

CACTUS BASIN NO. 3

24" RCP INLET TO BASIN NO. 3

DATE DEC. , 2007
SCALE AS SHOWN
FILE NO. 2-104-
SHEET NO. SD-2

PROFILE – 30" RCP

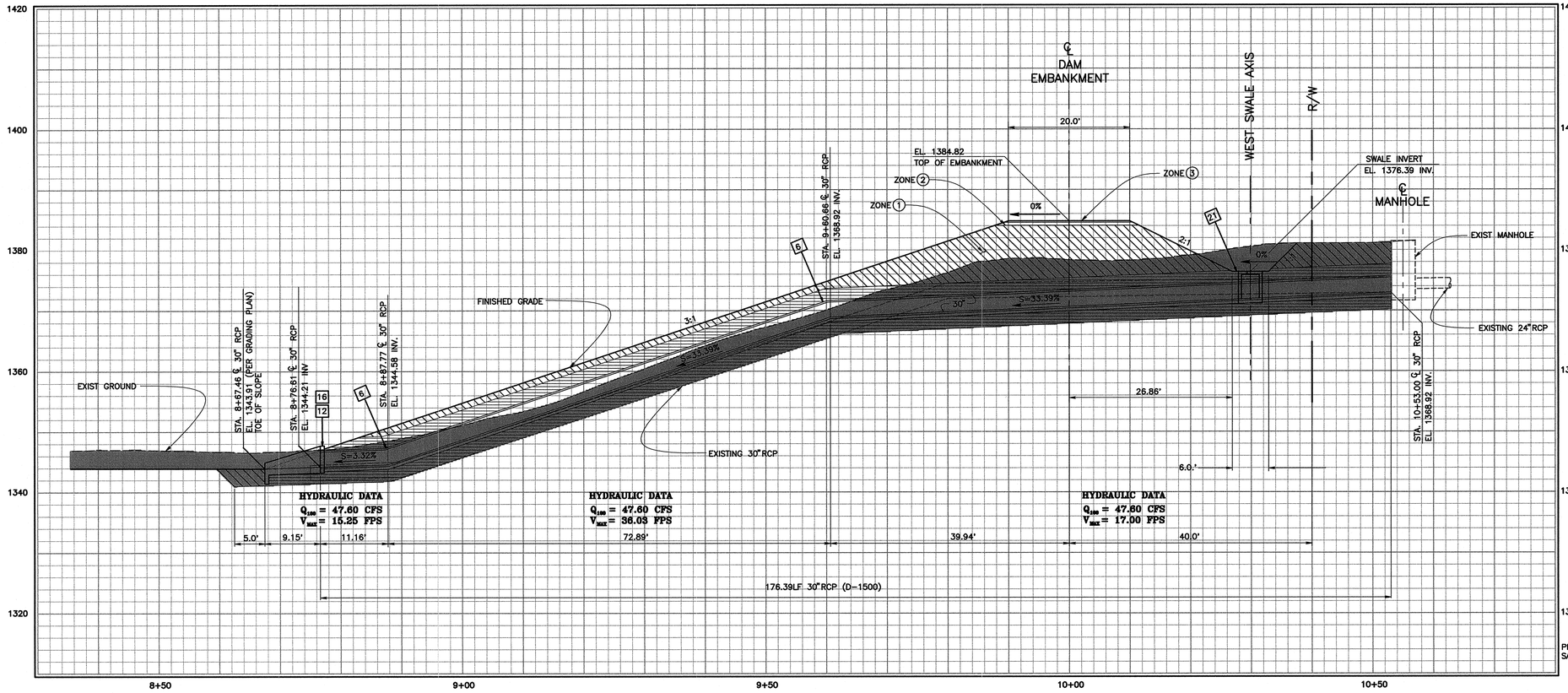

CONSTRUCTION CALLOUTS:

- [2] 3" AC PVMT ROAD SECTION PER (STD)
- [5] CONCRETED SPLASH PAD PER (STD)
- [6] CONCRETE COLLAR PER APWA SP 380–3 (STD)
- [12] HEADWALL WING–TYPE PER SBC STD. DRWG. 209 (STD)
- [16] SLOPED PROTECTION BARRIER PER APWA SP 360–0 (STD)
- [17] 6' WIDE WEST EARTHEN SWALE PER (STD)
- [21] DRAINAGE INLET TYPE G1 FOR 30" RCP PER CALTRANS SP D73 (STD)

CONSTRUCTION NOTES:

(2) CONSTRUCT EAST AND WEST EMBANKMENTS FOR SOUTH HALF OF BASIN NO. 3 PER PLAN ON SHEET C–3, PROFILE ON SHEETS P–1 TO P–3, SECTIONS ON SHEETS X–5 TO X–10 & X–13 TO X–16 AND SURVEY CONTROL DATA ON SHEET G–3

(15) CONSTRUCT WEST AND EAST ACCESS ROAD PER PLAN, TYPICAL SECTIONS ON SHEETS C–2 TO C–4, AND SURVEY CONTROL DATA ON SHEETS G–2 TO G–4.

(22) PROTECT IN PLACE EXISTING BOUNDARY CHAIN LINK FENCE

(39) BREAK AND REPLACE EXISTING 30" RCP PER PLAN, PROFILE ON SHEETS SD–3, SECTION ON SHEET SD–3 AND SURVEY CONTROL DATA ON SHEET G–3.

MATERIAL ZONES:

- ZONE (1) MIXED, BORROW FROM BASIN EXCAVATION, 93% RELATIVE COMPACTION
- ZONE (2) CLASS 2 AGGREGATE BASE, 6" DEEP
- ZONE (3) 3" AC PAVEMENT (ON 6" OF ZONE 2, 95% RELATIVE COMPACTION)
- ZONE (5) CONCRETED ROCK SPLASH PAD, FACING CLASS, METHOD 'A' PLACEMENT
- EXCAVATION

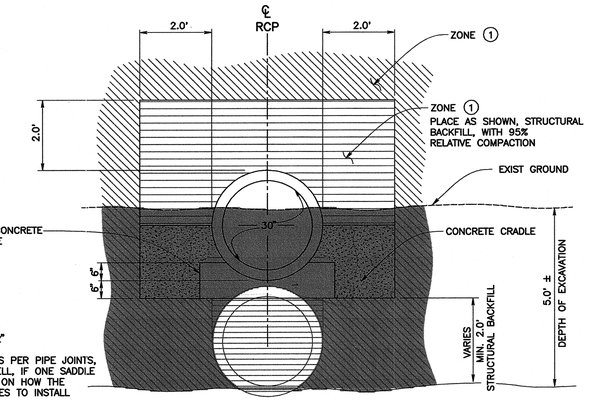

NOTES:

1 SADDLE WIDTH – 12"

2 ONE OR TWO SADDLES PER PIPE JOINTS, PLACED NEAR THE BELL. IF ONE SADDLE IS USED, DEPENDING ON HOW THE CONTRACTOR PROPOSES TO INSTALL THE RCP's

30" RCP PIPE BEDDING DETAIL

SCALE 1"=2'

PLAN – 30" RCP

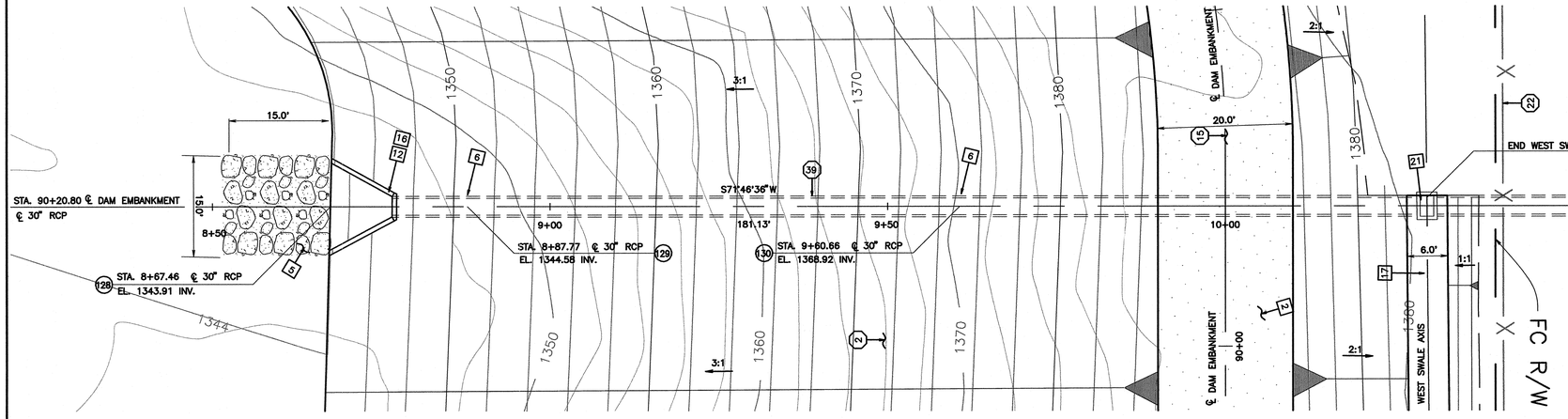

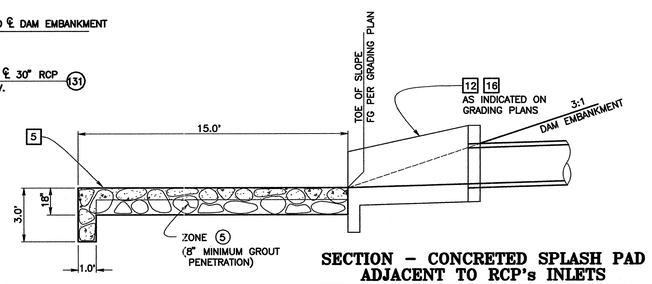

SECTION – CONCRETED SPLASH PAD ADJACENT TO RCP's INLETS

SCALE 1"=4'

PROJECT COORDINATES				
	NORTH	EAST	ELEVATION	DESCRIPTION
(128)	1,868,173.58	6,746,723.86	1343.91 INV	STA. 8+67.46 ℄ 30" RCP
(129)	1,868167.23	6,746,704.57	1344.58 INV	STA. 8+87.77 G.B. ℄ 30" RCP
(130)	1,868,144.43	6,746,635.34	1368.92 INV	STA. 9+60.66 G.B. ℄ 30" RCP
(131)	1,868,115.56	6,746,547.63	1372.98INV	STA.10+53.00 ℄ 30" RCP

SCALE 1"=10'
0 10 20 30

REGISTERED PROFESSIONAL ENGINEER JAMES PATRICK BORCUK No. 41807 Exp. 3/31/08 CIVIL STATE OF CALIFORNIA

SAN BERNARDINO COUNTY FLOOD CONTROL DISTRICT 1939 CALIFORNIA

REVISIONS			
MARK	DATE	DESCRIPTION	BY:

SUBMITTED BY: _____ CHIEF, ENGINEERING DIVISION DATE

RECOMMENDED BY: _____ ASSIST. FLOOD CONTROL ENGINEER DATE

APPROVED BY: _____ FLOOD CONTROL ENGINEER DATE

PROJ. ENGR.	DES. BY:	REV'D BY:	DRAWN BY:
T.R.	S.F.B./D.J.N.	J.B.	S.F.B./D.J.N.

SAN BERNARDINO COUNTY FLOOD CONTROL DISTRICT

FONTANA–RIALTO DRAINAGE SYSTEM

CACTUS BASIN NO. 3

30" RCP INLET TO BASIN NO. 3

DATE	SCALE	FILE NO.	SHEET NO.
DEC. , 2007	AS SHOWN	2–104–	SD–3

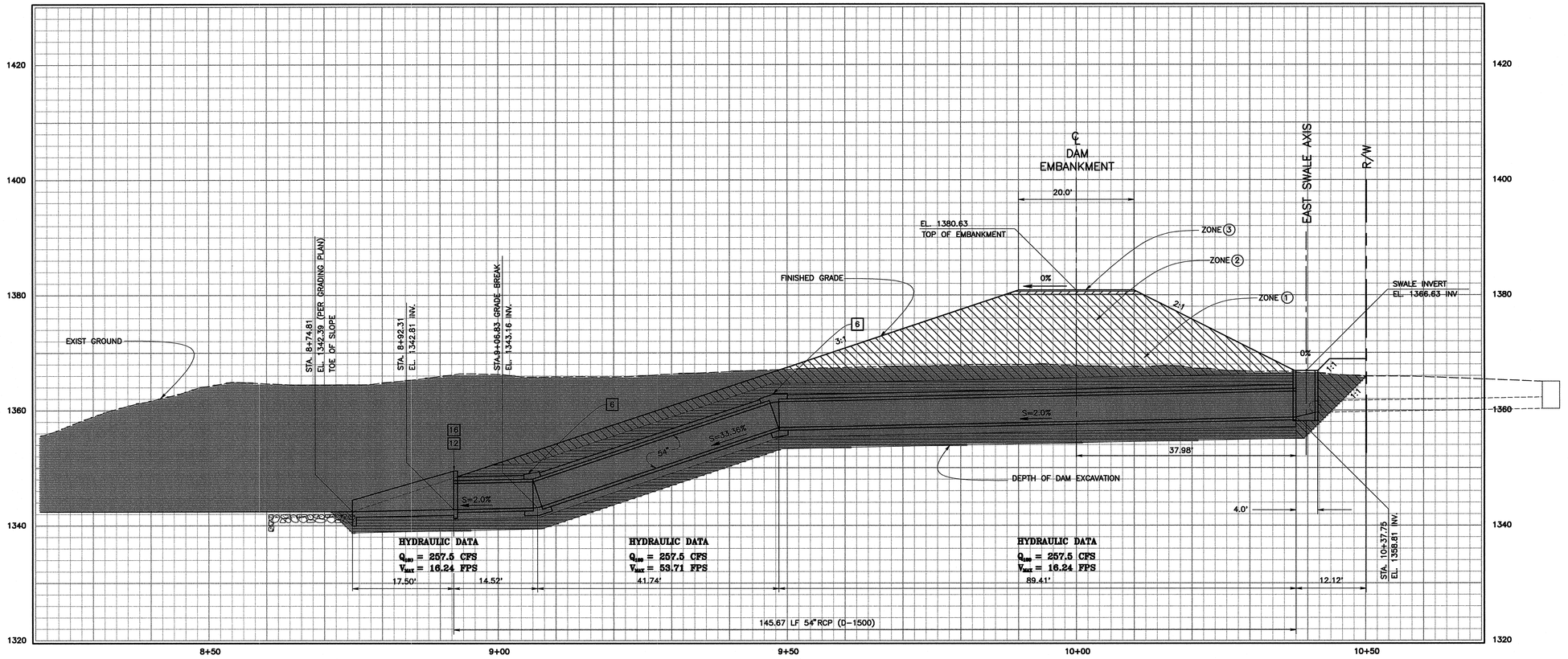

CONSTRUCTION CALLOUTS:

- 2 — 3" AC PVMT ROAD SECTION PER (STD)
- 5 — CONCRETED SPLASH PAD PER (STD)
- 6 — CONCRETE COLLAR PER APWA SP 380-3 (STD)
- 12 — HEADWALL WING-TYPE PER SBC STD. DRWG. 209 (STD)
- 14 — DRAINAGE INLET TYPE G2 FOR 54" RCP PER CALTRANS SP D73 (STD)
- 16 — SLOPED PROTECTION BARRIER PER APWA SP 360-0 (STD)
- 18 — 4' WIDE EAST EARTHEN SWALE PER (STD)

CONSTRUCTION NOTES:

- (2) CONSTRUCT EAST AND WEST EMBANKMENTS FOR SOUTH HALF OF BASIN NO. 3 PER PLAN ON SHEET C-3, PROFILE ON SHEETS P-1 TO P-3, SECTIONS ON SHEETS X-5 TO X-10 & X-13 TO X-16 AND SURVEY CONTROL DATA ON SHEET G-3
- (15) CONSTRUCT WEST AND EAST ACCESS ROAD PER PLAN, TYPICAL SECTIONS ON SHEETS C-2 TO C-4, AND SURVEY CONTROL DATA ON SHEETS G-2 TO G-4.
- (17) CONSTRUCT APPROX. 146 LINEAR FOOT OF 54" RCP INLET PER PLAN AND DETAILS ON SHEETS SD4A & SD4B (D-LOAD PER PROFILE)
- (35) PROTECT IN PLACE EXISTING BLOCK WALL
- (46) SAWCUT AND CONNECT EXISTING 24" RCP TO DRAINAGE INLET PER PLAN, PROFILE ON SHEET SD-4, PER APWA SP 308-1, CORNER CONNECTION.

MATERIAL ZONES:

- ZONE (1) — MIXED, BORROW FROM BASIN EXCAVATION, 93% RELATIVE COMPACTION
- ZONE (2) — CLASS 2 AGGREGATE BASE, 6" DEEP
- ZONE (3) — 3" AC PAVEMENT (ON 6" OF ZONE 2, 95% RELATIVE COMPACTION)
- ZONE (5) — CONCRETED ROCK SPLASH PAD, FACING CLASS, METHOD 'B' PLACEMENT
- EXCAVATION

PROFILE – 54" RCP

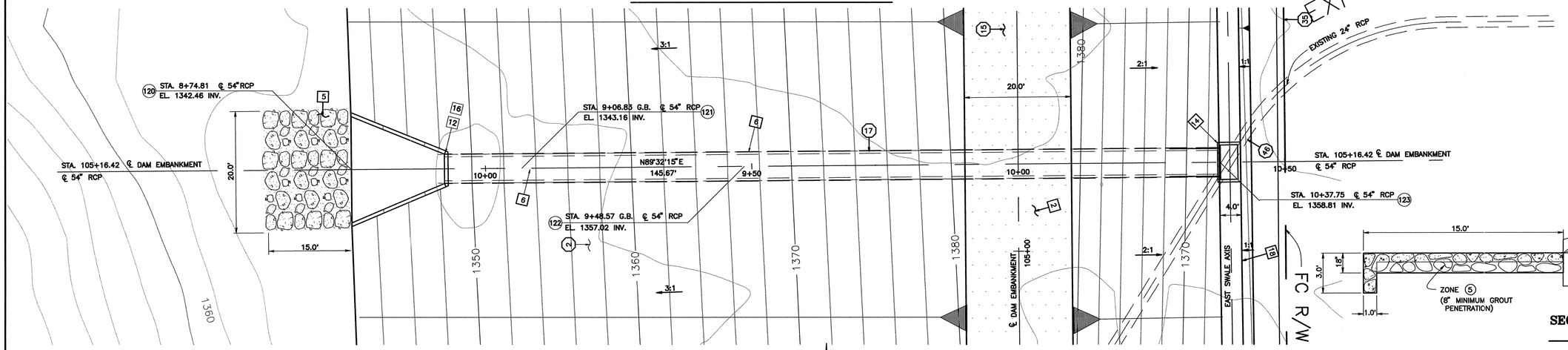

SECTION – CONCRETED SPLASH PAD ADJACENT TO RCP's INLETS

SCALE 1"=4'

PROJECT COORDINATES				
	NORTH	EAST	ELEVATION	DESCRIPTION
(120)	1,867,842.99	6,747,405.88	1342.46 INV	STA. 8+74.81 ℄ 54" RCP
(121)	1,867,843.25	6,747,437.90	1343.16 INV	STA. 9+06.83 G.B. ℄ 54" RCP
(122)	1,867,843.58	6,747,479.64	1357.02 INV	STA. 9+48.57 G.B. ℄ 54" RCP
(123)	1,867,844.30	6,747,568.91	1358.81 INV	STA.10+37.75 ℄ 54" RCP

PLAN – 54" RCP

SCALE 1"=10'

0 10 20 30

REGISTERED PROFESSIONAL ENGINEER — JAMES PATRICK BOURQUE — No. 41807, Exp. 3/31/08 — CIVIL — STATE OF CALIFORNIA

SAN BERNARDINO COUNTY FLOOD CONTROL DISTRICT — 1939 — CALIFORNIA

REVISIONS			
MARK	DATE	DESCRIPTION	BY:

SUBMITTED BY: CHIEF, ENGINEERING DIVISION DATE

RECOMMENDED BY: ASSIST. FLOOD CONTROL ENGINEER DATE

APPROVED BY: FLOOD CONTROL ENGINEER DATE

PROJ. ENGR.	DES. BY:	REV'D BY:	DRAWN BY:
T.R.	S.F.B./D.J.N.	J.B.	S.F.B./D.J.N.

SAN BERNARDINO COUNTY FLOOD CONTROL DISTRICT

FONTANA-RIALTO DRAINAGE SYSTEM

CACTUS BASIN NO. 3

54" RCP INLET TO BASIN NO. 3

DATE	SCALE	FILE NO.	SHEET NO.
DEC. , 2007	AS SHOWN	2-104-	SD-4

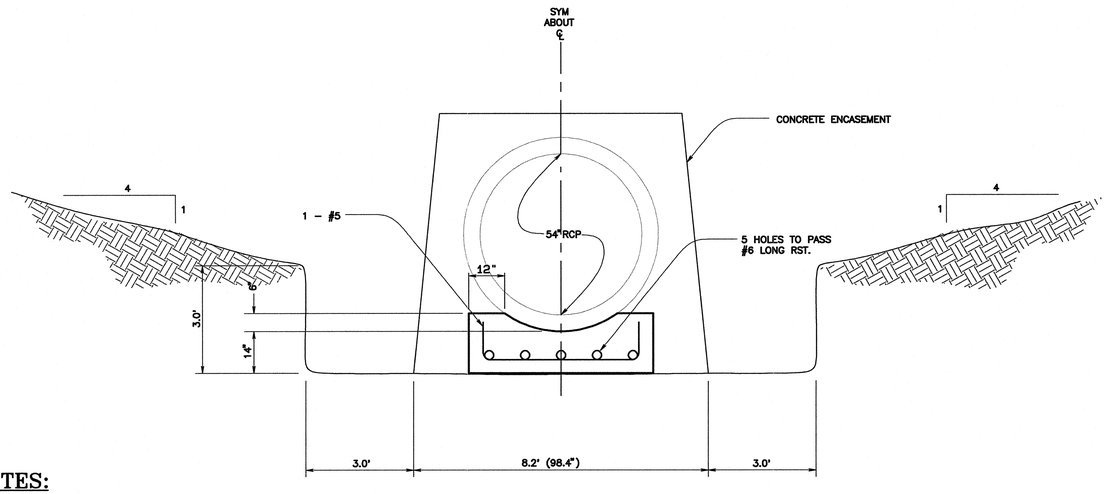

NOTES:

1. SADDLE WIDTH– 12"
2. ONE OR TWO SADDLES PER PIPE JOINT, PLACED NEAR THE BELL, IF ONE SADDLE IS USED, DEPENDING ON HOW THE CONTRACTOR PROPOSES TO INSTALL THE RCPs

TRENCH EXCAVATION AND SADDLES

SCALE 1" = 2'

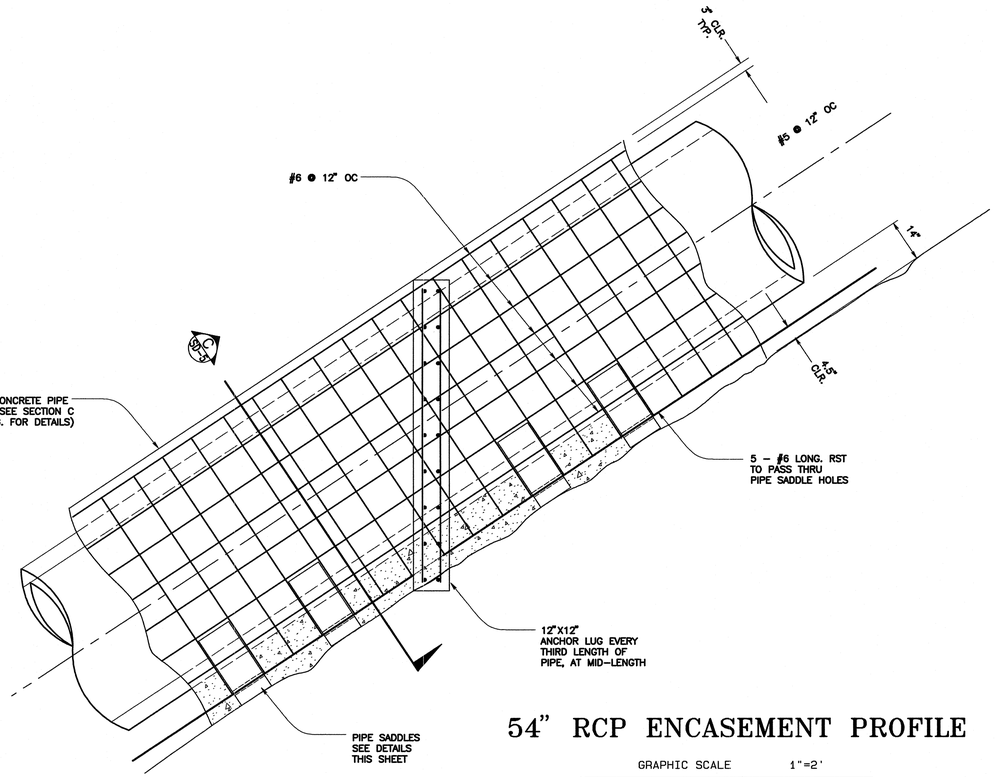

54" RCP ENCASEMENT PROFILE

GRAPHIC SCALE 1"=2'

0 2 4 6

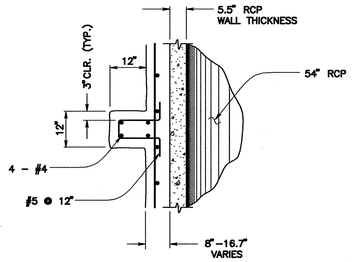

A SECTION

SCALE 1" = 2'

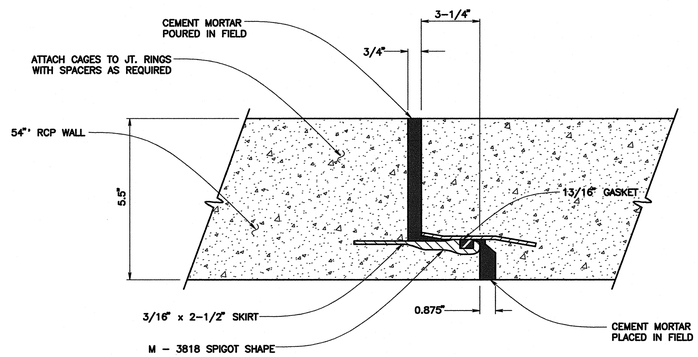

PIPE CONNECTION JOINT

NOT TO SCALE

ENCASEMENT NOTES:

1. THERE WILL BE A FORMED CONSTRUCTION JOINT IN THE BEDDING AT LEAST EVERY 24' O.C. LOCATED AT A PIPE JOINT.
2. 100 PERCENT OF THE LONGITUDINAL STEEL (#6 BARS) SHALL EXTEND THROUGH THE JOINT THE NONCONTINUOUS STEEL SHALL STOP 2 INCHES SHORT OF THE JOINT.

ALL REMNANTS OF PREVIOUS CONSTRUCTION OR OTHER MATERIAL THAT MIGHT INTERFERE WITH THE PERFORMANCE OR COMPLETION OF THE WORK, SHOULD BE CLEARED FROM THE SITE. GRASS AND BRUSH ROOTS SHOULD BE REMOVED. THE ACTUAL STRIPPING DEPTH SHOULD BE ESTABLISHED IN THE FIELD AT THE TIME OF CONSTRUCTION.

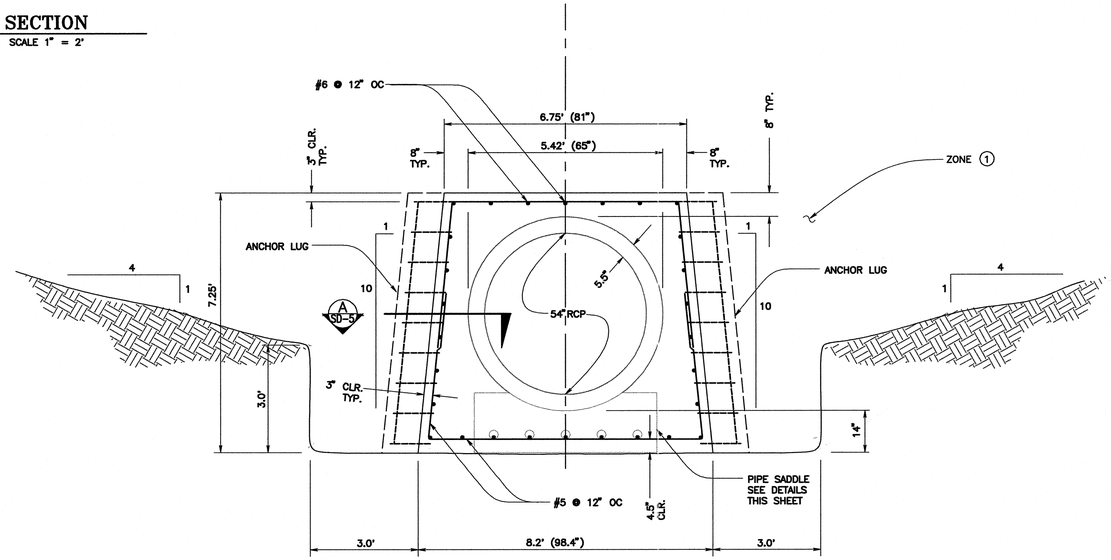

C SECTION

SCALE 1" = 2'

REGISTERED PROFESSIONAL ENGINEER JAMES PATRICK BORCHUK No. 41807 Exp. 2/31/08 CIVIL STATE OF CALIFORNIA

SAN BERNARDINO COUNTY FLOOD CONTROL DISTRICT 1939 CALIFORNIA

REVISIONS			
MARK	DATE	DESCRIPTION	BY:

SUBMITTED BY:

CHIEF, ENGINEERING DIVISION DATE

RECOMMENDED BY:

ASSIST. FLOOD CONTROL ENGINEER DATE

APPROVED BY:

FLOOD CONTROL ENGINEER DATE

PROJ. ENGR.	DES. BY:	REV'D BY:	DRAWN BY:
T.R.	S.F.B./D.J.N.	J.B.	S.F.B./D.J.N.

SAN BERNARDINO COUNTY FLOOD CONTROL DISTRICT

FONTANA–RIALTO DRAINAGE SYSTEM

CACTUS BASIN NO. 3

54" INLET ENCASEMENT SECTIONS AND DETAILS

DATE	DEC. , 2007
SCALE	AS SHOWN
FILE NO.	2–104
SHEET NO.	SD–5

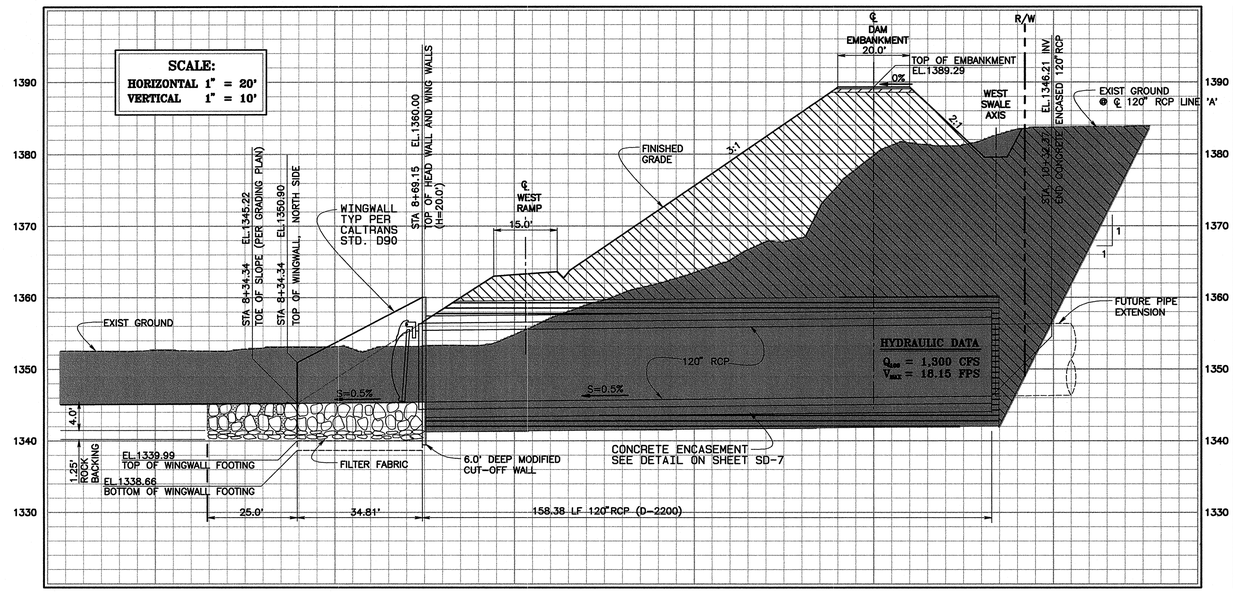

PROFILE – 120" RCP LINE 'A' @ STA 86+74.59 PER PLAN

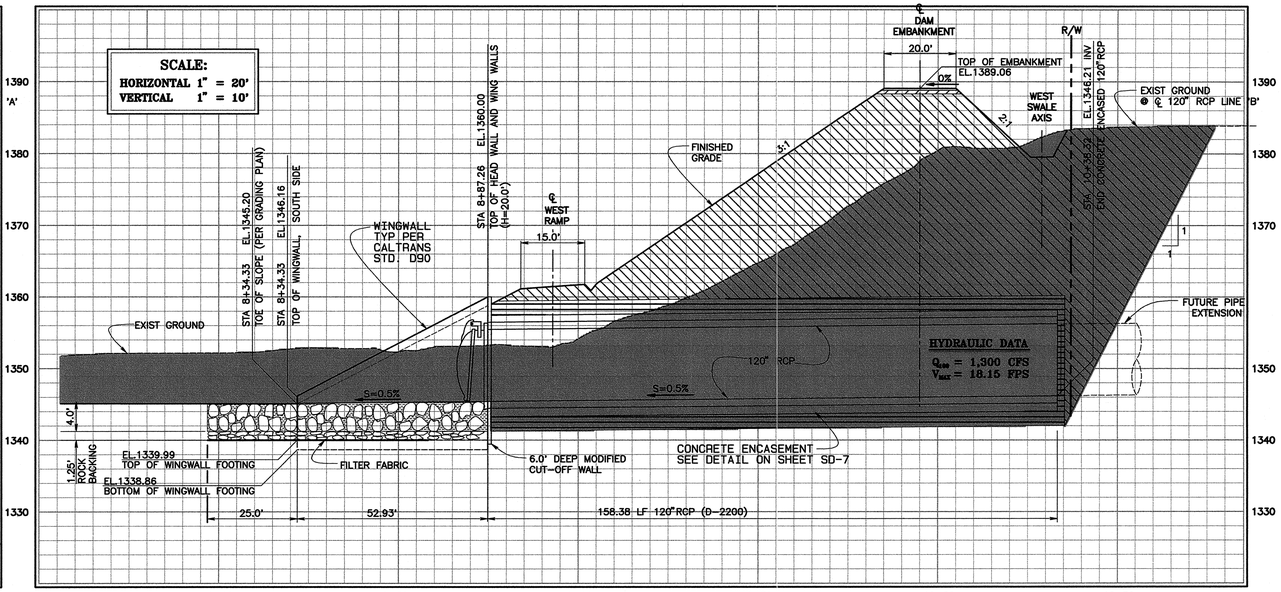

PROFILE– 120" RCP LINE 'B' @ STA 86+92.44 PER PLAN

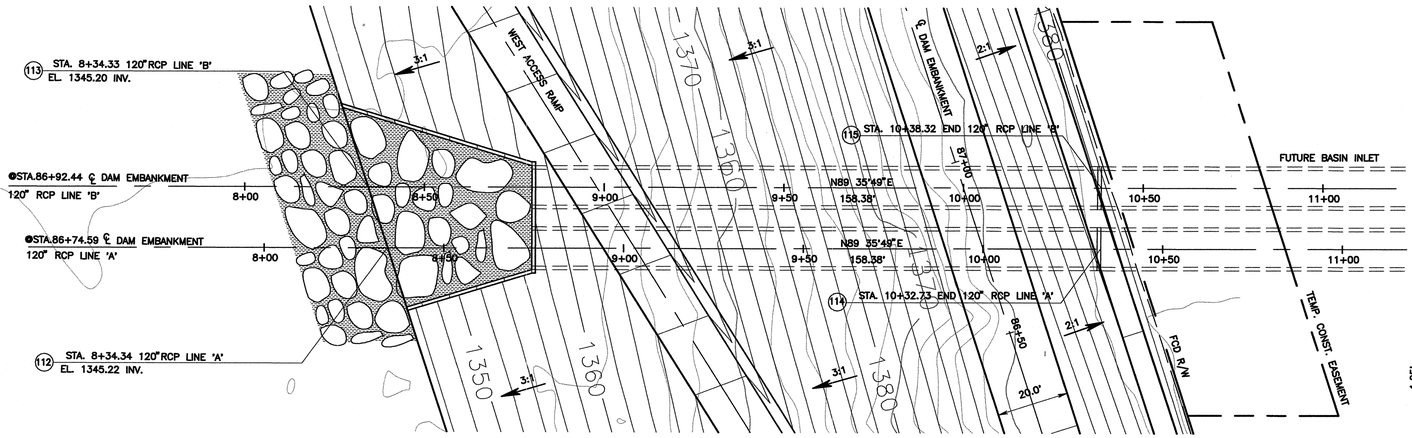

PLAN 2 – 120" RCPs, BASIN INLETS

PROJECT COORDINATES				
	NORTH	EAST	ELEVATION	DESCRIPTION
(112)	1,868,462.14	6,746,655.37	1345.22 INV	STA. 8+34.34 120" RCP LINE 'A'
(113)	1,868,445.18	6,746,660.97	1345.20 INV	STA. 8+34.33 120" RCP LINE 'B'
(114)	1,868,460.75	6,746,456.98	1346.21 INV	STA. 10+32.73 END 120" RCP LINE 'A'
(115)	1,868,443.75	6,746,456.98	1346.21 INV	STA. 10+38.32 END 120" RCP LINE 'B'

GRAPHIC SCALE 1"=20'
0 20 40 60

WINGWALL AND HEADWALL MODIFICATIONS:

STRUCTURAL DIMENSIONS FOR WINGWALLS SHOWN ON THE PLAN & PROFILE VIEWS HEREON, FOR THE 120" INLET STRUCTURE SHALL BE AS PER CALTRANS STD. NO. D-90 EXCEPT AS NOTED HEREON.

1. ACTUAL WALL HEIGHTS ARE AS SHOWN ON THE PROFILE VIEW, THE STRUCTURAL SECTION SHALL BE AS PER THE STANDARD DETAIL WITH (DESIGN H=+1' , ACTUAL HEIGHT +1') ADJUST STEEL AT THE TOP OF THE WALL FOR 1'–0", DIFFERENCE BETWEEN THE ACTUAL HEIGHT AND THE DESIGN HEIGHT.
2. LONGITUDINAL STEEL SHALL BE #5 @ 12" OC IN PLACE OF WHAT IS SHOWN IN THE STANDARD DETAIL.
3. HEADWALL FOOTING FOR OUTLET STRUCTURE SHALL BE MODIFIED SO THAT THE DEPTH IS EQUAL TO 6' IN PLACE OF THE 4' SHOWN IN THE STANDARD DETAIL . ADD AND ADJUST BARS SHOWN AS REQUIRED TO MAINTAIN STRUCTURAL LISTING SHOWN IN THE STANDARD PLAN DETAIL.
4. CONSTRUCT WEEPHOLES PER DETAILS SHOWN ON STD. D-90.

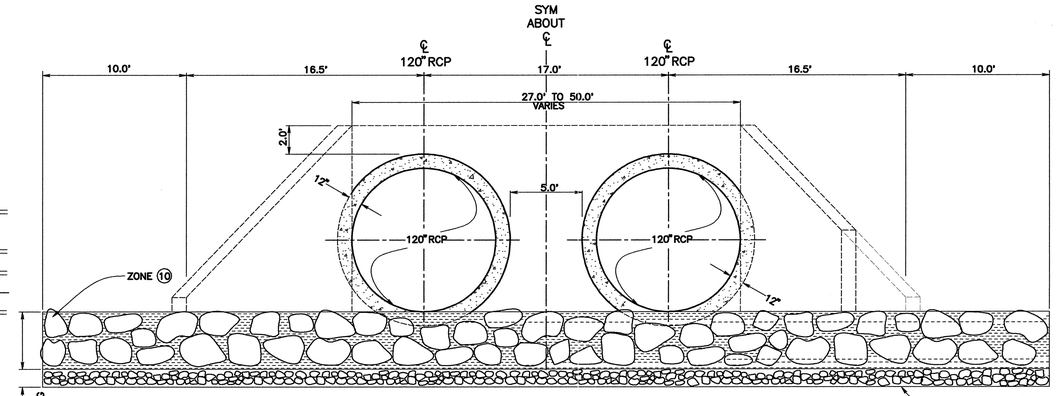

TYPICAL RIPRAP CHANNEL SECTION

SCALE 1"=5'

CONSTRUCTION CALLOUTS:

- [2] 3" AC PVMT ROAD SECTION PER
- [8] CHANNEL FENCE PER SHT FCD–II
- [19] CONCRETE BULKHEAD PER RIVERSIDE COUNTY M816(MODIFIED)
- [20] WATERMAN FLAP GATE

MATERIAL ZONES:

- ZONE (1) MIXED, BORROW FROM BASIN EXCAVATION, 93% RELATIVE COMPACTION
- ZONE (2) CLASS 2 AGGREGATE BASE, 6" DEEP
- ZONE (3) 3" AC PAVEMENT (ON 6" OF ZONE 2, 95% RELATIVE COMPACTION)
- ZONE (10) 1/2 TON CONCRETE RIPRAP (T=4.0') WITH UPPER 6" TO 9" OF TOP LAYER EXPOSED. TYPE 'B' PLACEMENT WITH 1.25' THICK ROCK BACKING NO. 2 AND TYPE 'A' ROCK SLOPE ROTECTION FABRIC PER CALTRANS STD. SPEC. SECTION 72

CONSTRUCTION NOTES:

(29) CONSTRUCT CONCRETE CUT–OFF WALLS PER PLAN ON SHEET C–6 AND DETAILS ON SHEETS S–3, S–6

(40) CONSTRUCT 2 –120" RCPs BASIN INLETS PER PLAN, PROFILE AND SECTION ON SHEET SD–5A (D–LOAD PER PROFILE)

(41) CONSTRUCT 2 –120"" RCPs ENCASEMENT PER DETAILS ON SHEET SD–5B

(42) CONSTRUCT HEADWALL AND WINGWALLS FOR 2 –120" RCPs INTLETS PER PLAN, PROFILE ON SHEET SD–5A AND PER CALTRANS STD. DETAIL D90A

REGISTERED PROFESSIONAL ENGINEER JAMES PATRICK BOUCUK No. 41807 Exp. 3-31-08 CIVIL STATE OF CALIFORNIA

SAN BERNARDINO COUNTY FLOOD CONTROL DISTRICT 1939 CALIFORNIA

REVISIONS			
MARK	DATE	DESCRIPTION	BY:

SUBMITTED BY: _____ CHIEF, ENGINEERING DIVISION DATE

RECOMMENDED BY: _____ ASSIST. FLOOD CONTROL ENGINEER DATE

APPROVED BY: _____ FLOOD CONTROL ENGINEER DATE

PROJ. ENGR.	DES. BY:	REV'D BY:	DRAWN BY:
T.R.	S.F.B./D.J.N.	J.B.	S.F.B./D.J.N.

SAN BERNARDINO COUNTY FLOOD CONTROL DISTRICT

FONTANA–RIALTO DRAINAGE SYSTEM

CACTUS BASIN NO. 3

2–120" RCPs INLETS PLAN, PROFILE AND DETAILS

DATE	SCALE	FILE NO.	SHEET NO.
DEC. , 2007	AS SHOWN	2-104-	SD-6

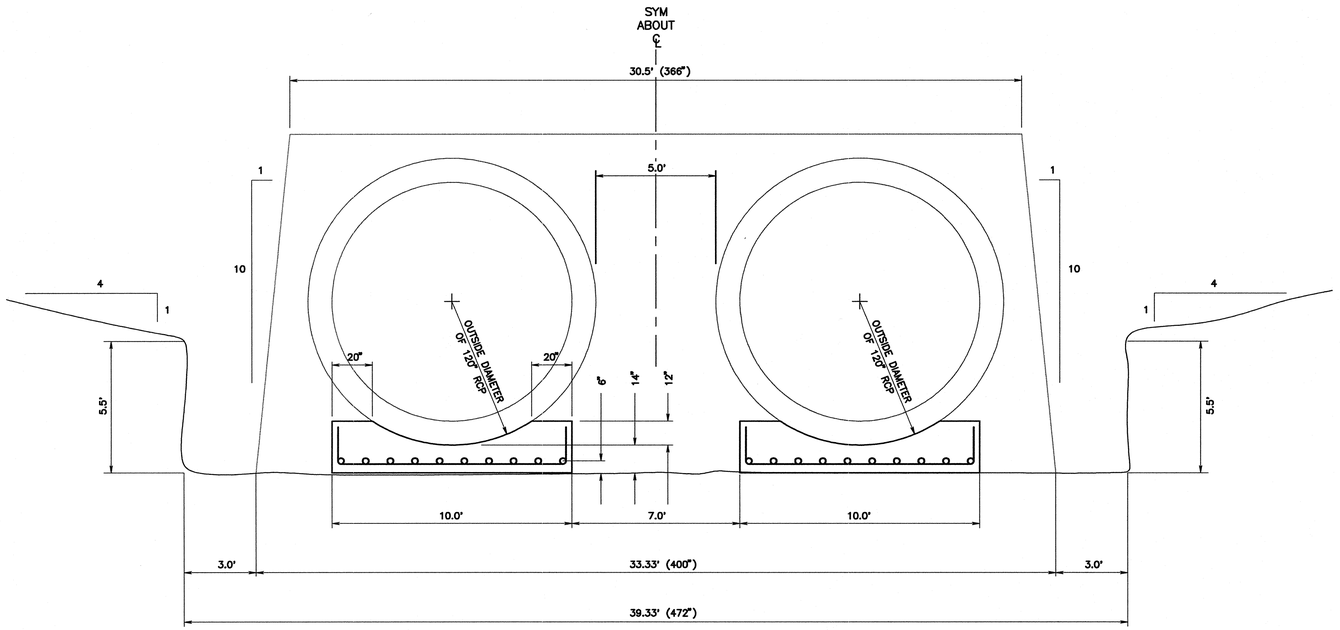

NOTES:

1. SADDLE WIDTH– 12"
2. ONE OR TWO SADDLES PER PIPE JOINT, PLACED NEAR THE BELL, IF ONE SADDLE IS USED, DEPENDING ON HOW THE CONTRACTOR PROPOSES TO INSTALL THE RCPs

TRENCH EXCAVATION AND SADDLES

SCALE 1" = 3'

ENCASEMENT NOTES:

1. THERE WILL BE A FORMED CONSTRUCTION JOINT IN THE BEDDING AT LEAST EVERY 24" O.C. LOCATED AT A PIPE JOINT.
2. 100 PERCENT OF THE LONGITUDINAL STEEL (#6 BARS) SHALL EXTEND THROUGH THE JOINT THE NONCONTINUOUS STEEL SHALL STOP 2 INCHES SHORT OF THE JOINT.

ALL REMNANTS OF PREVIOUS CONSTRUCTION OR OTHER MATERIAL THAT MIGHT INTERFERE WITH THE PERFORMANCE OR COMPLETION OF THE WORK, SHOULD BE CLEARED FROM THE SITE. GRASS AND BRUSH ROOTS SHOULD BE REMOVED. THE ACTUAL STRIPPING DEPTH SHOULD BE ESTABLISHED IN THE FIELD AT THE TIME OF CONSTRUCTION.

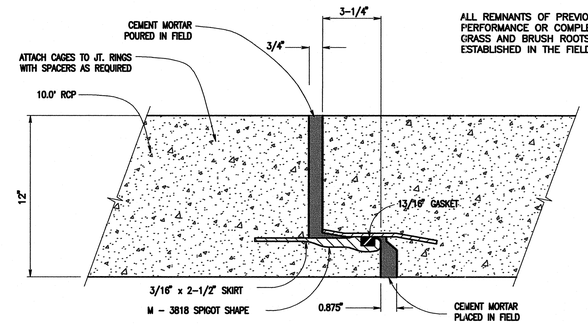

PIPE CONNECTION JOINT

NOT TO SCALE

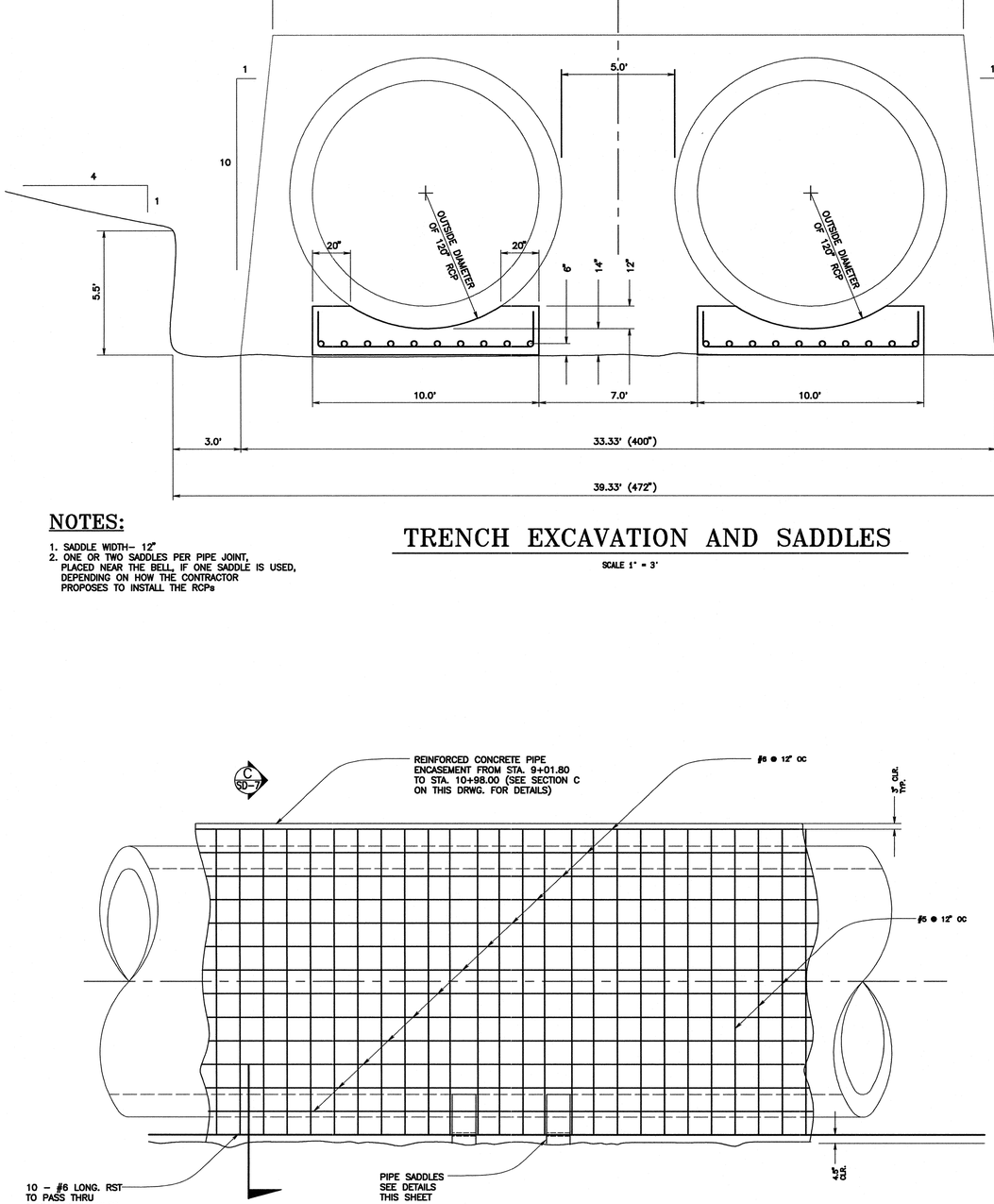

120" RCP ENCASEMENT PROFILE

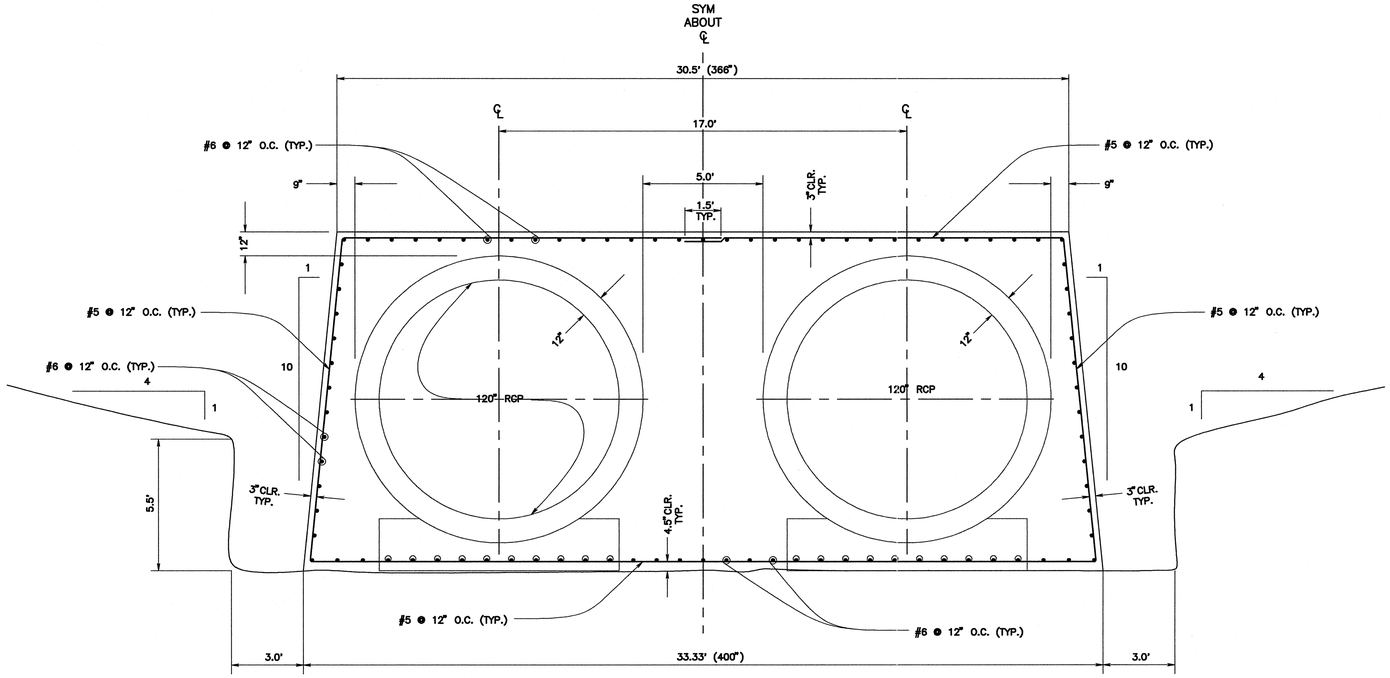

C SECTION

SCALE 1"=3'

GRAPHIC SCALE 1"=3'

0 3 6 9

REGISTERED PROFESSIONAL ENGINEER
JAMES PATRICK BOURQUIN
No. 41807
Exp. 2/31/08
CIVIL
STATE OF CALIFORNIA

SAN BERNARDINO COUNTY FLOOD CONTROL DISTRICT 1939 CALIFORNIA

REVISIONS			
MARK	DATE	DESCRIPTION	BY:

SUBMITTED BY:

CHIEF, ENGINEERING DIVISION DATE

RECOMMENDED BY:

ASSIST. FLOOD CONTROL ENGINEER DATE

APPROVED BY:

FLOOD CONTROL ENGINEER DATE

PROJ. ENGR.	DES. BY:	REV'D BY:	DRAWN BY:
T.R.	S.F.B./D.J.N.	J.B.	S.F.B./D.J.N.

SAN BERNARDINO COUNTY FLOOD CONTROL DISTRICT

FONTANA–RIALTO DRAINAGE SYSTEM

CACTUS BASIN NO. 3

2– 120" RCPs ENCASEMENT SECTIONS AND DETAILS

DATE	DEC. , 2007
SCALE	AS SHOWN
FILE NO.	2-104-
SHEET NO.	SD-7

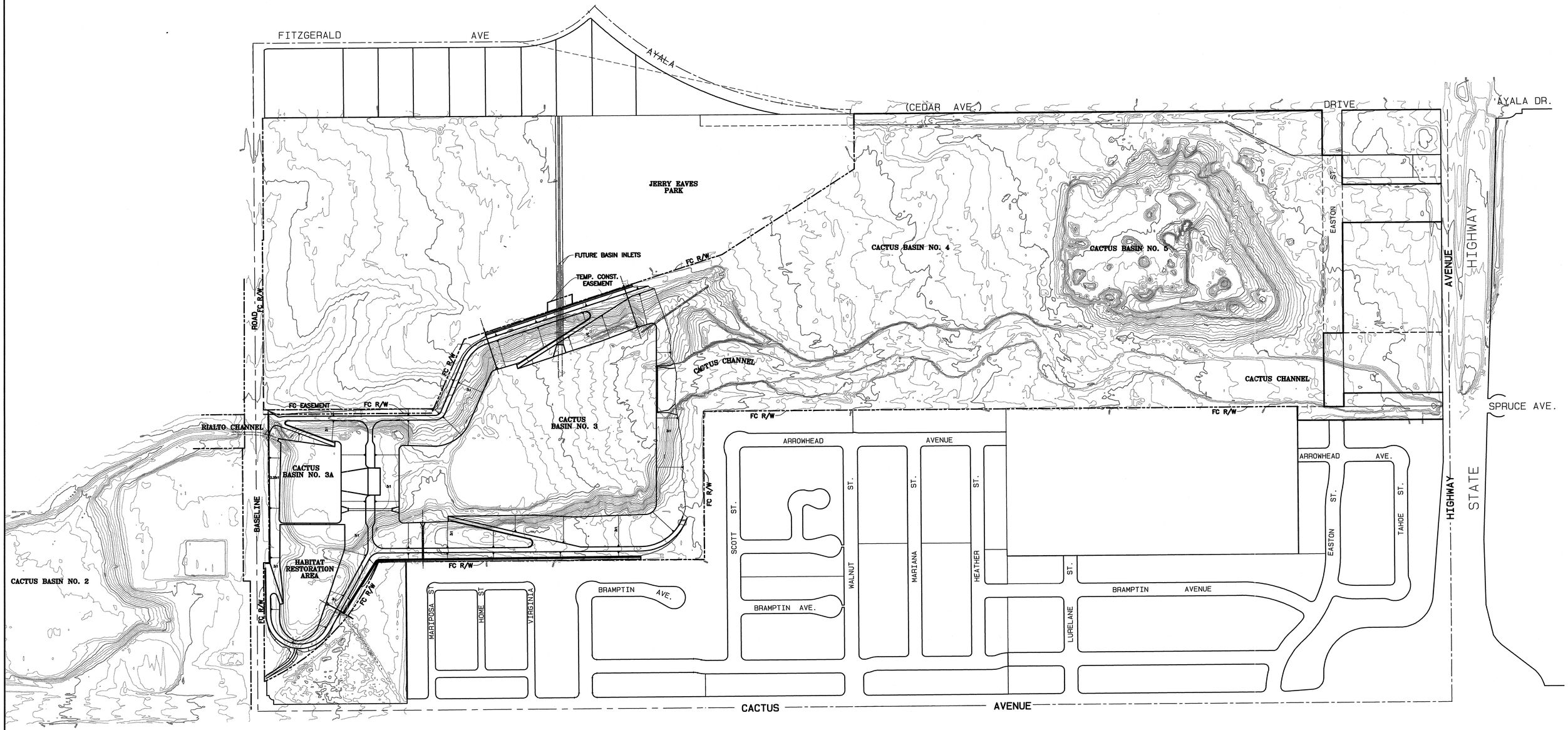

N

HORIZONTAL SCALE 1"=200'

0 200 400 600

NOTE:

ANY STOCKPILING OF MATERIAL IN BASIN WILL BE SUBJECT TO APPROVAL AND LOCATION BY THE ENGINEER. THE BASIN SHALL BE RESTORED AND ANY EXCESS MATERIAL SHALL BE REMOVED PRIOR TO THE COMPLETION OF CONTRACT

REGISTERED PROFESSIONAL ENGINEER
JAMES PATRICK BOURQUE
No. 41807
Exp. 3/31/08
CIVIL
STATE OF CALIFORNIA

SAN BERNARDINO COUNTY FLOOD CONTROL DISTRICT 1939 CALIFORNIA

REVISIONS			
MARK	DATE	DESCRIPTION	BY:

SUBMITTED BY:

CHIEF, ENGINEERING DIVISION DATE

RECOMMENDED BY:

ASSIST. FLOOD CONTROL ENGINEER DATE

APPROVED BY:

FLOOD CONTROL ENGINEER DATE

PROJ. ENGR.	DES. BY:	REV'D BY:	DRAWN BY:
T.R.	S.F.B./D.J.N.	J.B.	S.F.B./D.J.N.

SAN BERNARDINO COUNTY FLOOD CONTROL DISTRICT

FONTANA-RIALTO DRAINAGE SYSTEM

CACTUS BASIN NO. 3

PROPOSED BORROW PIT

DATE	DEC. ,2007
SCALE	AS SHOWN
FILE NO.	2-104-
SHEET NO.	B-1

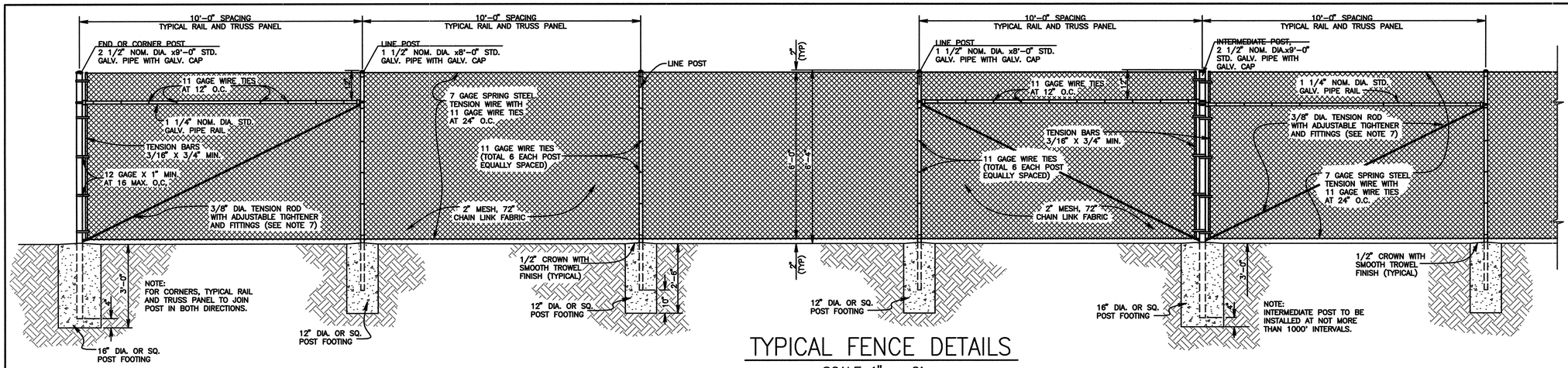

TYPICAL FENCE DETAILS

SCALE 1" = 2'

PIPE MATERIAL LIST

Nominal Diameter (Inches)	Outside Diameter (Inches)	Inside Diameter (Inches)	Weight per Foot Lbs.
1 1/4	1.660	1.380	2.270
1 1/2	1.900	1.610	2.720
2	2.375	2.067	3.650
2 1/2	2.875	2.469	5.790
3	3.500	3.068	7.580
3 1/2	4.000	3.548	9.110
4	4.500	4.026	10.790
6	6.625	6.065	18.970
8	8.625	7.981	28.55

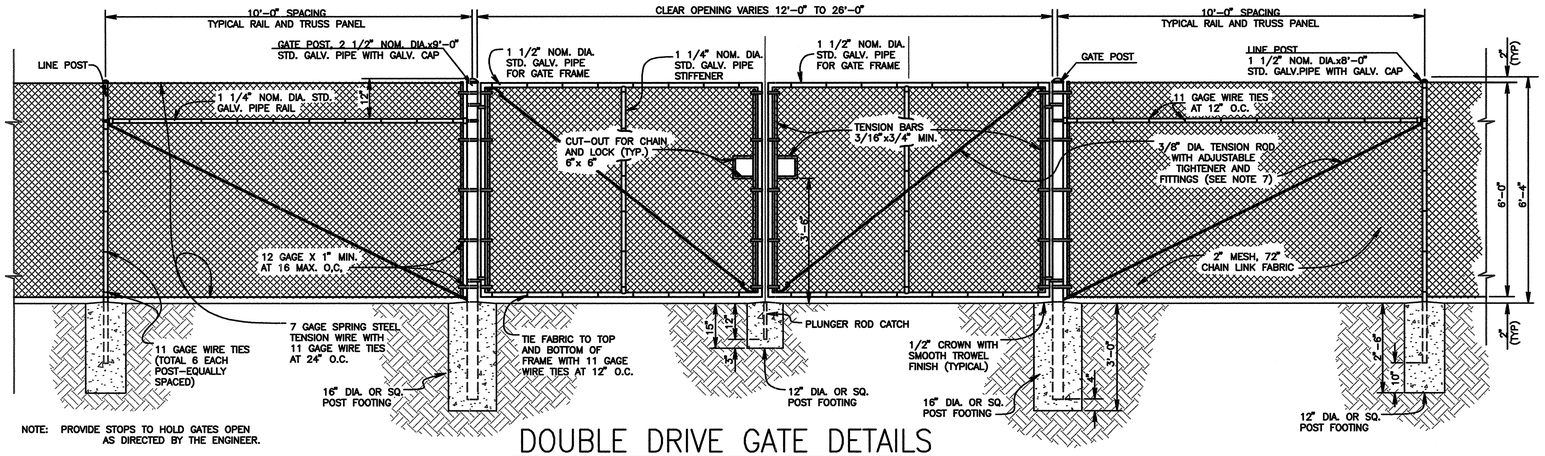

NOTE: PROVIDE STOPS TO HOLD GATES OPEN AS DIRECTED BY THE ENGINEER.

DOUBLE DRIVE GATE DETAILS

SCALE 1" = 2'

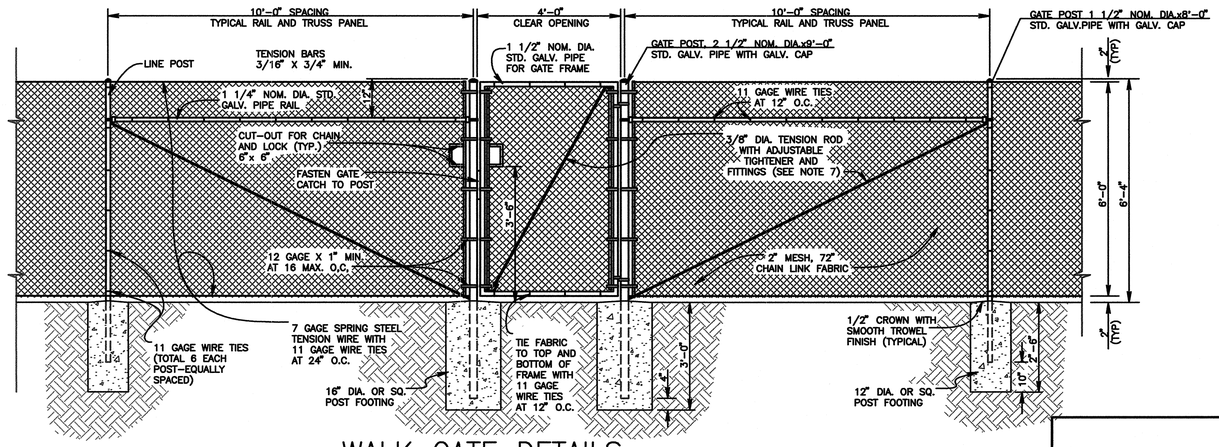

WALK GATE DETAILS

SCALE 1" = 2'

GENERAL NOTES

1. ALL CHAIN LINK FENCE MATERIALS, FITTINGS AND INSTALLATION SHALL CONFORM TO THE LATEST EDITION OF THE DEPARTMENT OF TRANSPORTATION STANDARD SPECIFICATIONS, SECTION 80, "FENCES" AND THIS SPECIAL DRAWING.
2. THE FENCE FABRIC SHALL BE PLACED ON THE OUTWARD FACING SIDE OF THE POSTS, STRECHED TAUT, AND SECURELY FASTENED, UNLESS OTHERWISE SHOWN ON THE PLANS.
3. CLEARANCE BETWEEN RIGHT-OF-WAY AND FENCE FABRIC SHALL BE 6" UNLESS OTHERWISE SHOWN ON THE PLANS.
4. ALL GATES SHALL OPEN INWARD, EXCEPT IF OTHERWISE NOTED IN SPECIAL PROVISIONS.
5. ALL CHAIN LINK FENCE MATERIALS, FITTINGS AND INSTALLATION SHALL CONFORM TO THE LATEST EDITION OF THE DEPARTMENT OF TRANSPROTATIONS STANDARD SPECIFICATIONS, SECTION 80, "FENCES" AND THIS SPECIAL DRAWING.
6. SECURE GALVANIZED CAP TO POST WITH 1/4" GALVANIZED ROUND HEAD RIVET, OR TRACK WELD.
7. ADJUSTABLE TIGHTENER SHALL BE TURNBUCKLE OR EQUIVALENT, HAVING A 6" MINIMUM TAKEUP.
8. DIAMETER SIZE OF LINE, INTERMEDIATE, CORNER, END AND GATE POSTS TO BE AS SHOWN ON THIS SPECIAL DRAWING.
9. ALL BOLTED HARDWARE ITEMS SHALL ALSO BE TACK WELDED IN SUCH A MANNER AS TO PREVENT REMOVAL BY UNAUTHORIZED INDIVIDUALS.
10. ALL FENCE FABRIC SHALL HAVE A 12", WIDE HORIZONTALLY PAINTED STRIPE ALONG THE CENTER OF THE FABRIC. THE PAINT SHALL BE A REFLECTIVE TYPE ORANGE OR APPROVED EQUAL. AFTER FENCE FABRIC HAS BEEN PAINTED, A SAMPLE OF SAID PAINT SHALL BE GIVEN TO THE SAN BERNARDINO COUNTY FLOOD CONTROL DISTRICT, OPERATIONS DIVISION, ALONG WITH MANUFACTURER'S NAME AND PAINT SPECIFICATIONS.
11. THE FENCE FABRIC SHALL BE 11 GAUGE UNLESS OTHERWISE SPECIFIED.

REVISIONS			
MARK	DATE	DESCRIPTION	BY:

SUBMITTED BY:

CHIEF, ENGINEERING DIVISION DATE

RECOMMENDED BY:

ASSIST. FLOOD CONTROL ENGINEER DATE

APPROVED BY:

FLOOD CONTROL ENGINEER DATE

PROJ. ENGR.	DES. BY:	REV'D BY:	DRAWN BY:
T.B.	S.F.B./D.J.N.	J.B.	S.F.B./D.J.N.

SAN BERNARDINO COUNTY FLOOD CONTROL DISTRICT

FONTANA-RIALTO DRAINAGE SYSTEM
BOUNDARY FENCING

SPEC. DRWG. I
6' CHAIN LINK FENCE
(TYPE CL-6 = 72" FABRIC)

DATE DEC. , 2007

SCALE AS SHOWN

FILE NO. 2-104-

SHEET NO. FCD-1

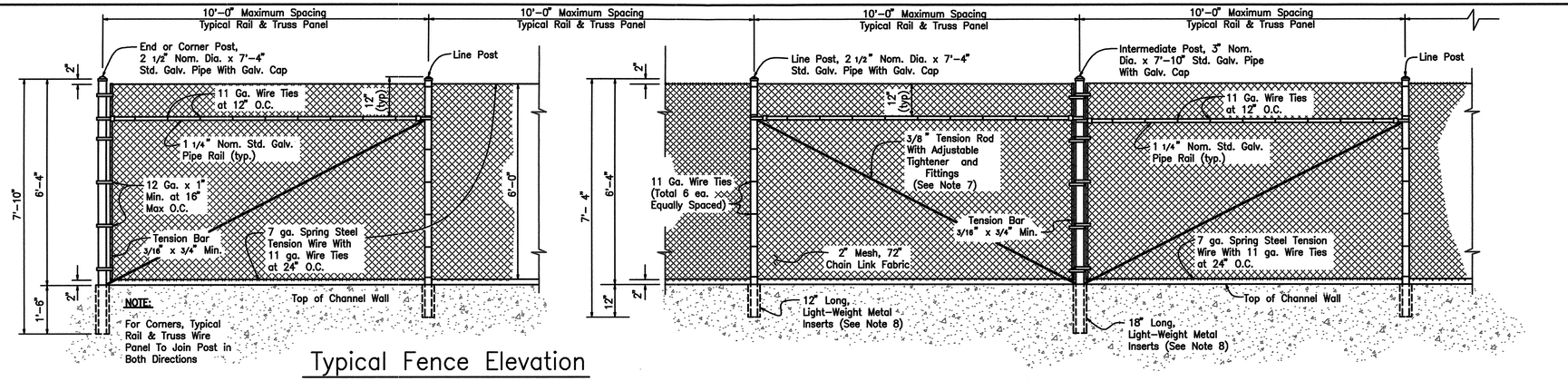

Typical Fence Elevation

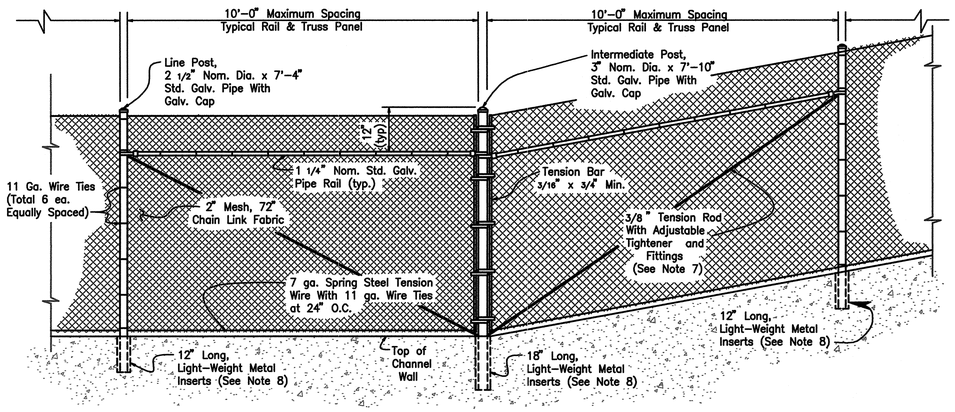

Typical Fence Elevation on Slope

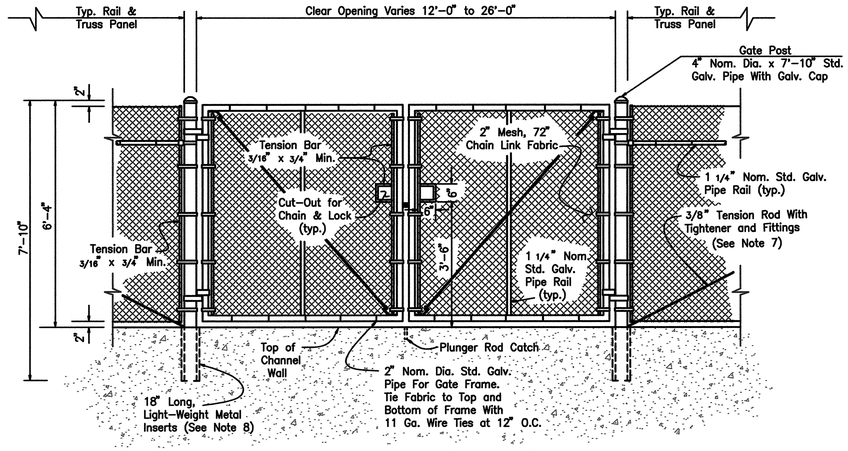

Typical Double Drive Gate

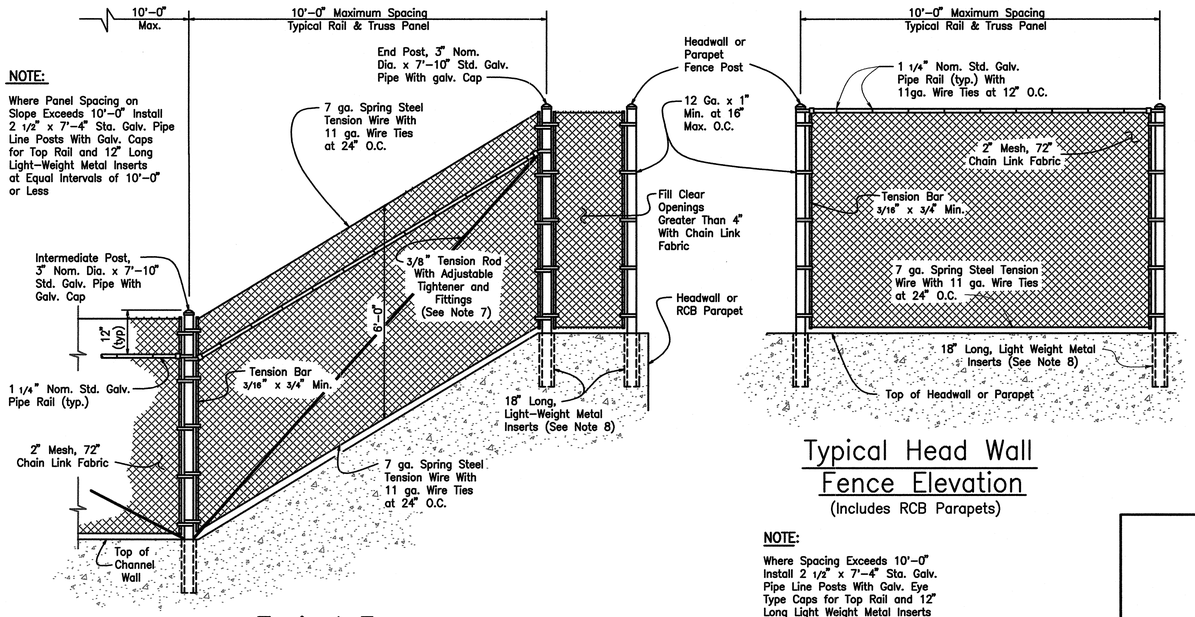

Typical Fence Elevation at Headwall

(Includes RCB Parapets)

Typical Head Wall Fence Elevation

(Includes RCB Parapets)

NOTE:
Where Spacing Exceeds 10'-0" Install 2 1/2" x 7'-4" Sta. Galv. Pipe Line Posts With Galv. Eye Type Caps for Top Rail and 12" Long Light Weight Metal Inserts at Equal Intervals of 10'-0" or Less

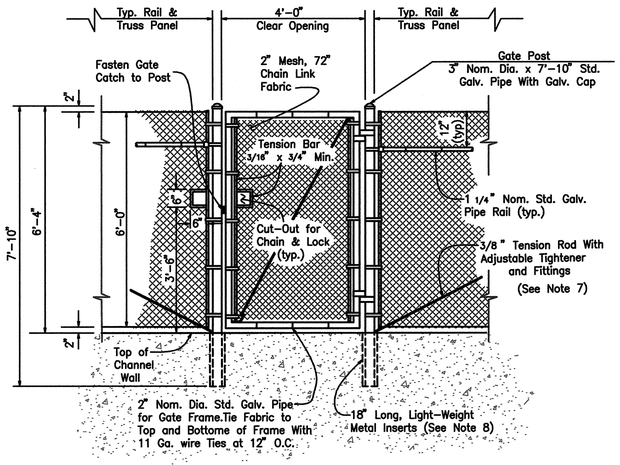

Typical Walk Gate

SCALE: 1" = 2'

PIPE MATERIAL LIST

Nominal Diameter (Inches)	Outside Diameter (Inches)	Inside Diameter (Inches)	Weight per Foot Lbs.
1 1/4	1.660	1.380	2.270
1 1/2	1.900	1.610	2.720
2	2.375	2.067	3.650
2 1/2	2.875	2.469	5.790
3	3.500	3.068	7.580
3 1/2	4.000	3.548	9.110
4	4.500	4.026	10.790
6	6.625	6.065	18.970
8	8.625	7.981	28.55

GENERAL NOTES

1. ALL CHAIN LINK FENCE MATERIALS, FITTINGS AND INSTALLATION SHALL CONFORM TO THE LATEST EDITION OF THE DEPARTMENT OF TRANSPORTATION STANDARD SPECIFICATIONS, SECTION 80, "FENCES" AND THIS SPECIAL DRAWING.
2. THE FENCE FABRIC SHALL BE PLACED ON THE OUTWARD FACING SIDE OF THE POSTS, STRECHED TAUT, AND SECURELY FASTENED, UNLESS OTHERWISE SHOWN ON THE PLANS.
3. THE FENCE FABRIC SHALL BE 9 GAUGE UNLESS OTHERWISE SPECIFIED.
4. ALL GATES SHALL OPEN INWARD, EXCEPT IF OTHERWISE NOTED IN THE SPECIAL PROVISIONS.
5. ALL GATE HINGES SHALL BE HEAVY DUTY MALLEABLE IRON OR STEEL, INDUSTRIAL SEVICE TYPE 270 DEGREE SWING, NON-REMOVEABLE OF APPORVED QUALITY AND DESIGN, AND SHALL BE FASTENED FROM THE INSIDE.
6. SECURE GALVANIZED CAP TO POST WITH 1/4" GALVANIZED ROUND HEAD RIVET, OR TACK WELD.
7. ADJUSTABLE TIGHTENER SHALL BE TURNBUCKLE OR EQUIVALENT, HAVING A 6" MINIMUM TAKEUP.
8. LIGHT-WEIGHT METAL INSERTS SHALL BE SHEET METAL TUBES WITH I.D. 3/4" GREATER THAN O.D. OF PIPE USED. POSTS ARE TO BE GROUTED INTO INSERTS USING NEAT GROUT OF 1 PART OF CEMENT AND 2 PARTS OF WATER.
9. ALL BOLTED HARDWARE ITEMS SHALL ALSO BE TACK WELDED IN SUCH A WAY MANNER AS TO PREVENT REMOVAL BY UNAUTHORIZED INDIVIDUALS.
10. ALL FENCE FABRIC SHALL HAVE A 12", WIDE HORIZONTALLY PAINTED STRIPE ALONG THE CENTER OF THE FABRIC. THE PAINT SHALL BE A REFLECTIVE TYPE ORANGE OR APPROVED EQUAL. AFTER FENCE FABRIC HAS BEEN PAINTED, A SAMPLE OF SAID PAINT SHALL BE GIVEN TO THE SAN BERNARDINO COUNTY FLOOD CONTROL DISTRICT, OPERATIONS DIVISION, ALONG WITH MANUFACTURER'S NAME AND PAINT SPECIFICATIONS.
11. FOR WALL THICKNESSES 12" OR GREATER, USE POST SIZES AS SHOWN. FOR WALL THICKNESS LESS THAN 12", USE POST SIZES AS FOLLOWS:
END, CORNER, INTERMEDIATE, HEADWALL, PARAPET & WALK GATE POSTS – 2 1/2" NOM. DIA.
LINE POSTS – 2" NOM. DIA.
DOUBLE DRIVE GATE POSTS – 3" NOM. DIA.

REVISIONS			
MARK	DATE	DESCRIPTION	BY:

SUBMITTED BY:
CHIEF, ENGINEERING DIVISION DATE
RECOMMENDED BY:
ASSIST. FLOOD CONTROL ENGINEER DATE
APPROVED BY:
FLOOD CONTROL ENGINEER DATE

PROJ. ENGR.	DES. BY:	REV'D BY:	DRAWN BY:
T.R.	S.F.B./D.J.N.	J.B.	S.F.B./D.J.N.

SAN BERNARDINO COUNTY FLOOD CONTROL DISTRICT

FONTANA-RIALTO DRAINAGE SYSTEM

SPEC. DRWG. II

6' CHAIN LINK FENCE (TYPE CL-6 = 72" FABRIC)

DATE DEC. , 2007

SCALE AS SHOWN

FILE NO. 2-104-

SHEET NO. FCD-2