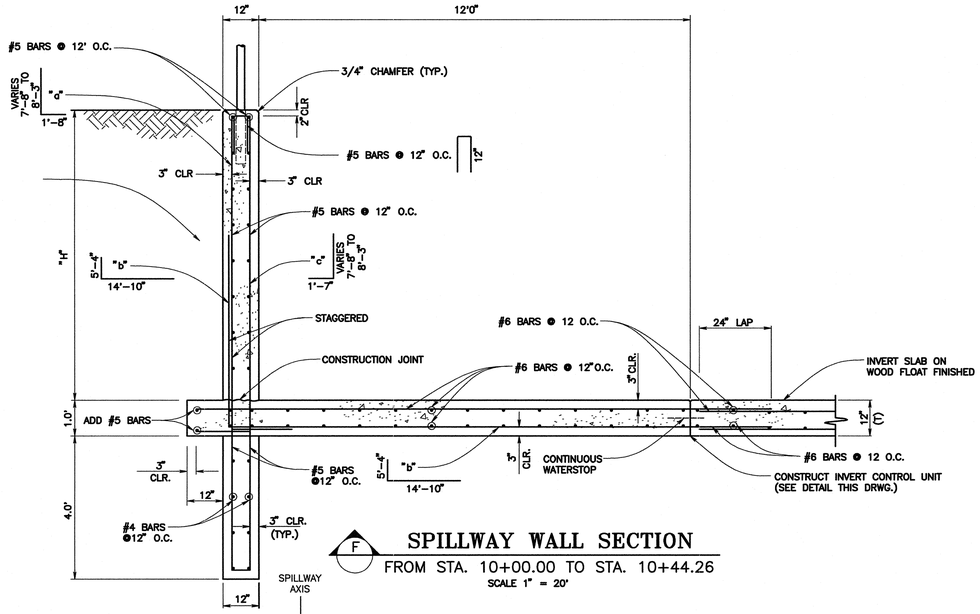

SPILLWAY WALL SECTION

(F)

FROM STA. 10+00.00 TO STA. 10+44.26

SCALE 1" = 20'

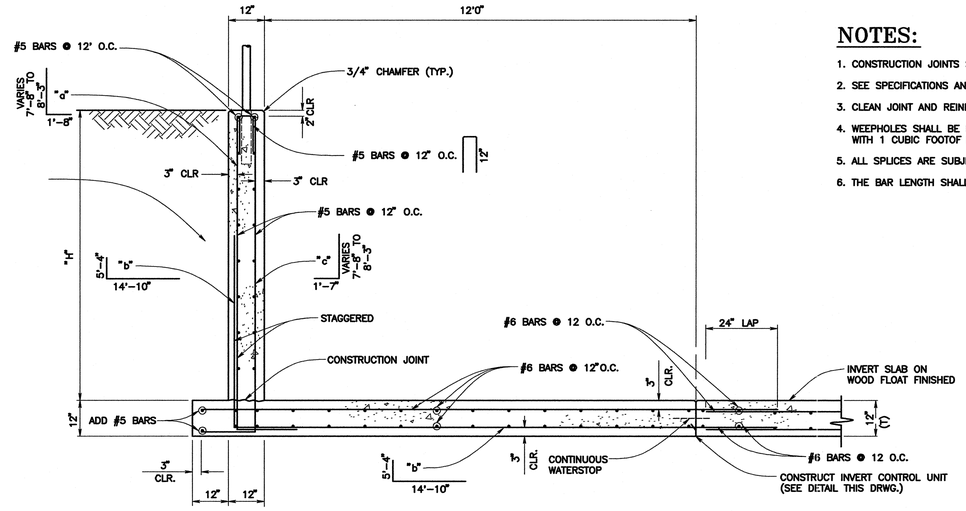

SPILLWAY WALL SECTION

(E)

FROM STA. 8+70.95 TO STA. 10+00.00

SCALE 1" = 20'

NOTES:

1. CONSTRUCTION JOINTS SHALL BE LOCATED AS SHOWN IN THIS SHEET
2. SEE SPECIFICATIONS AND STRUCTURAL NOTES PER S-1
3. CLEAN JOINT AND REINFORCING PRIOR TO PLACING ADJOINING CONCRETE
4. WEEPHOLES SHALL BE FORMED AS SHOWN IN BOTH WALLS AT A SPACING OF 10' WITH 1 CUBIC FOOTOF FILTER MATERIAL WRAPPED IN FILTER FABRIC PLACED AT EACH HOLE
5. ALL SPLICES ARE SUBJECTED TO APPROVAL BY THE ENGINEER
6. THE BAR LENGTH SHALL VARY INFORMALY THROUGH THE TRANSITION

DESIGN DATA:

SOIL DENSITY=145 PCF
MIN. LAP=1'-6"

ALLOWABLE STRESSES:

*f'_c= 5000 PSI f'_y= 60,000 PSI
f_c= 1800 PSI f_s= 24,000 PSI
*FOR INVERT SLAB, WALLS AND OTHER ITEMS USE
f'_c= 4000 PSI

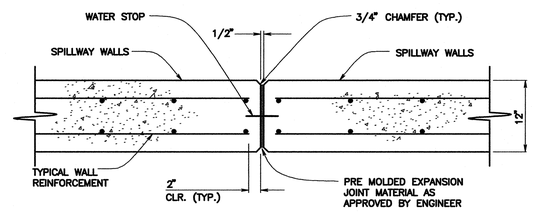

WALL CONTRACTION JOINT DETAIL

SCALE 1" = 1'

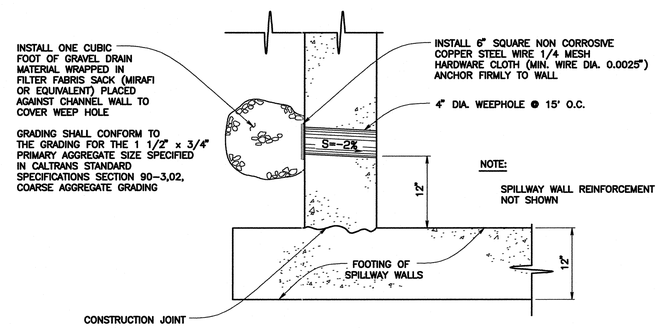

NOTE:

SPILLWAY WALL REINFORCEMENT NOT SHOWN

WEEPHOLE DETAIL

SCALE 1" = 1'

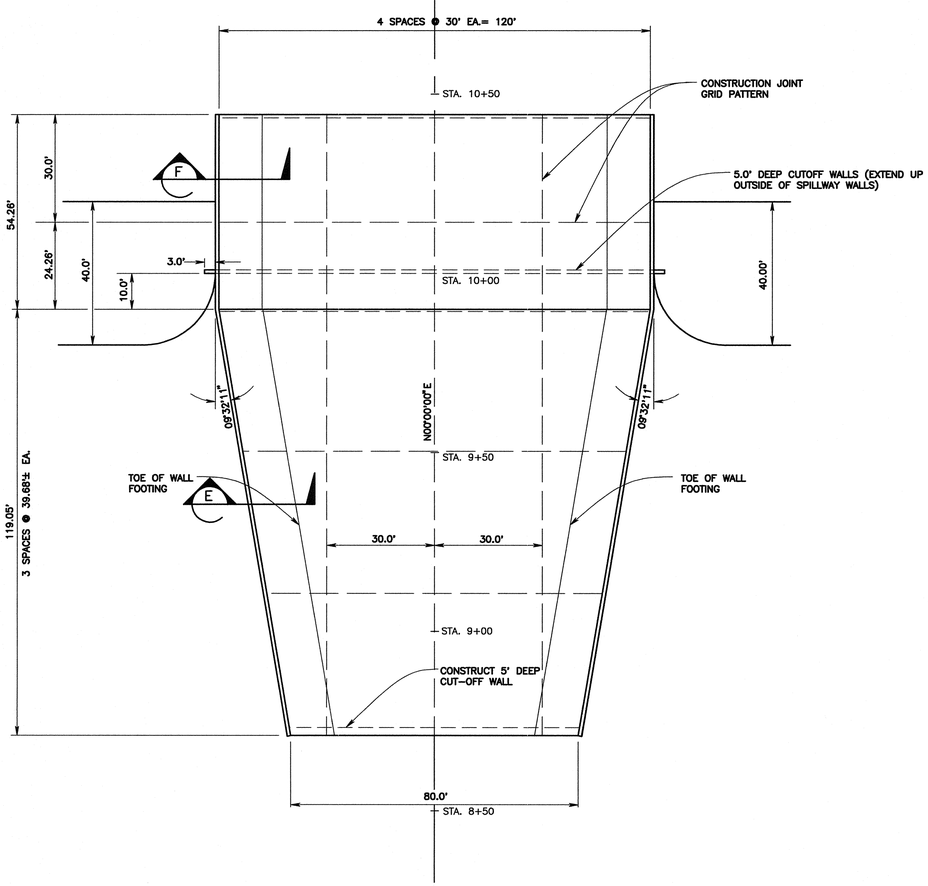

SPILLWAY CONSTRUCTION JOINT GRID PLAN

SCALE 1" = 20'

TABLE 1
SPILLWAY STRUCTURAL WALL SCHEDULE

CONCRETE			REINFORCING STEEL		
STATIONS	HEIGHT "H"	SPILLWAY WIDTH	"a"	"b"	"c"
8+70.95 TO 9+90.00	7'-0"	80' TO 120'	#6 @ 12"	#6 @ 12"	#5 @ 12"
9+90.00 TO 10+23.00	7' TO 7'-8"	120'	#6 @ 12"	#6 @ 9"	#5 @ 12"
10+23.00 TO 10+44.26	7'-8" TO 1'-0"	120'	#6 @ 12"	#6 @ 9"	#5 @ 12"

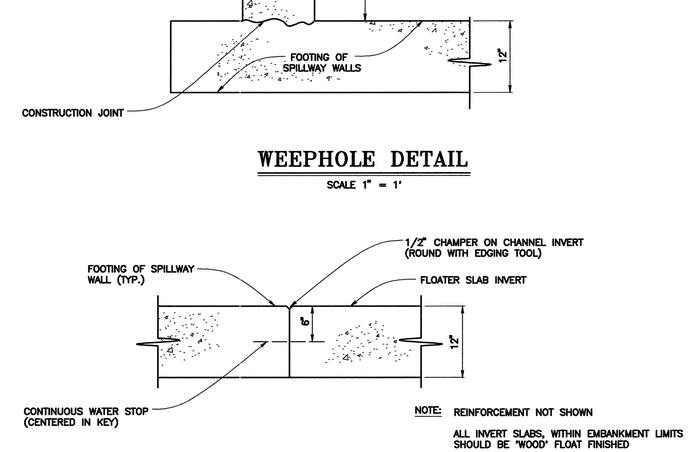

NOTE: REINFORCEMENT NOT SHOWN

ALL INVERT SLABS, WITHIN EMBANKMENT LIMITS SHOULD BE 'WOOD' FLOAT FINISHED

INVERT CONTROL JOINT DETAIL

(LONGITUDINAL AND TRANSVERSE JOINT ALONG SPILLWAY INVERT)

SCALE 1" = 1'

GRAPHIC SCALE 1"=20'
0 20 40 60

REGISTERED PROFESSIONAL ENGINEER JAMES PATRICK SORCUK No. 41807 Exp. 3/31/08 CIVIL STATE OF CALIFORNIA

SAN BERNARDINO COUNTY FLOOD CONTROL DISTRICT 1939 CALIFORNIA

REVISIONS

MARK	DATE	DESCRIPTION	BY:

SUBMITTED BY:
CHIEF, ENGINEERING DIVISION DATE
RECOMMENDED BY:
ASSIST. FLOOD CONTROL ENGINEER DATE
APPROVED BY:
FLOOD CONTROL ENGINEER DATE

PROJ. ENGR.	DES. BY:	REV'D BY:	DRAWN BY:
T.R.	S.F.B./D.J.N.	J.B.	S.F.B./D.J.N.

SAN BERNARDINO COUNTY FLOOD CONTROL DISTRICT

FONTANA-RIALTO DRAINAGE SYSTEM

CACTUS BASINS NO. 3

BASIN OUTLET SPILLWAY
TYPICAL WALL
STRUCTURAL SECTIONS & DETAILS

DATE DEC. , 2007
SCALE AS SHOWN
FILE NO. 2-104-
SHEET NO. S-5