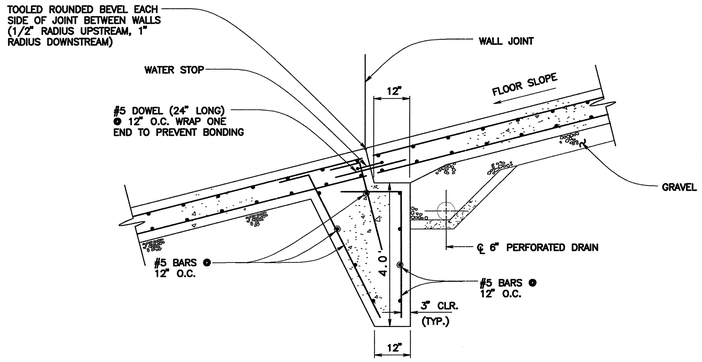

SUBDRAIN CUT-OFF WALL DETAIL

NOT TO SCALE

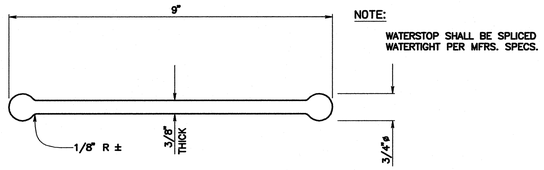

NOTE:

WATERSTOP SHALL BE SPLICED WATERTIGHT PER MFRS. SPECS.

DUMBELL WATERSTOP

NOT TO SCALE

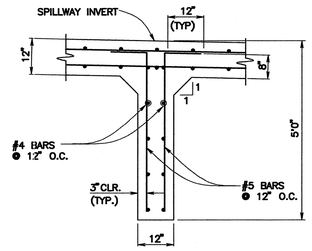

A CUT OFF WALL SECTION

NOT TO SCALE

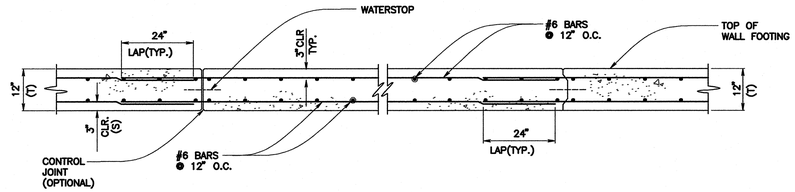

SPILLWAY INVERT DETAIL

NOT TO SCALE

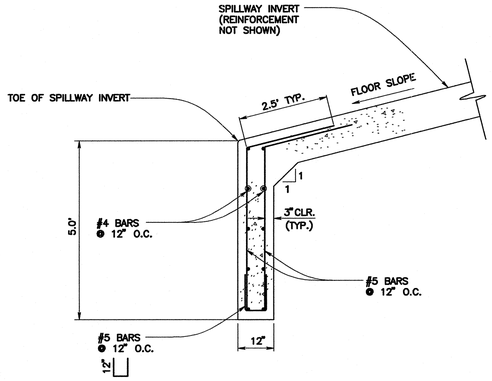

CUT-OFF WALL DETAIL @ STA. 8+70.95

NOT TO SCALE

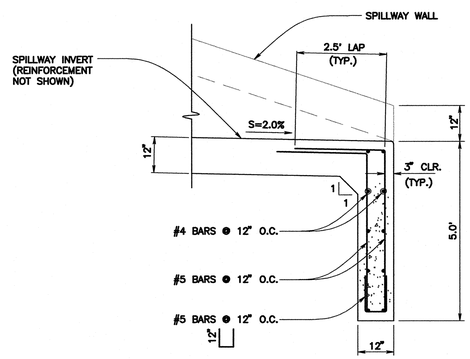

CUT-OFF WALL DETAIL @ STA. 10+44.26

NOT TO SCALE

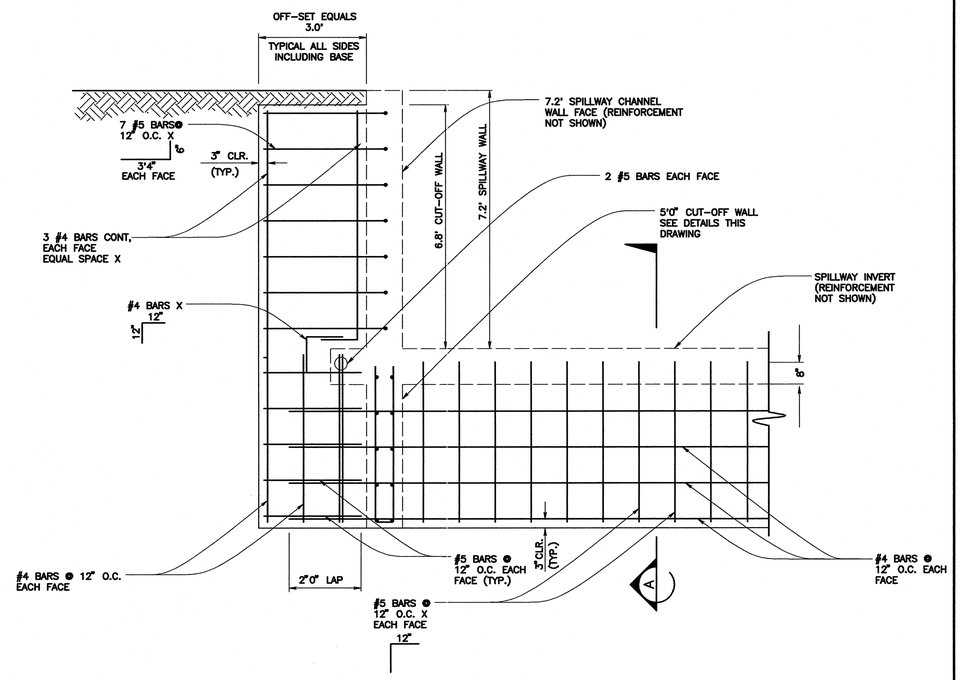

CUT-OFF WALL PROFILE @ STA. 10+00.00

NOT TO SCALE

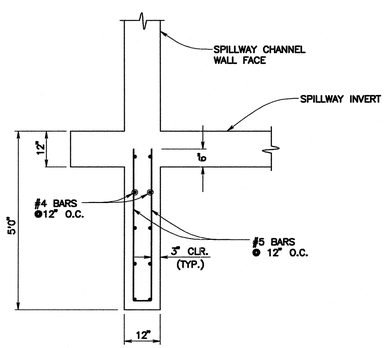

CUT-OFF WALL FROM STA. 10+00.00 TO STA. 10+44.26

NOT TO SCALE

REGISTERED PROFESSIONAL ENGINEER JAMES PATRICK BORCUK No. 41807 Exp. 3/31/08 CIVIL STATE OF CALIFORNIA

SAN BERNARDINO COUNTY FLOOD CONTROL DISTRICT 1939 CALIFORNIA

REVISIONS			
MARK	DATE	DESCRIPTION	BY:

SUBMITTED BY:

CHIEF, ENGINEERING DIVISION — DATE

RECOMMENDED BY:

ASSIST. FLOOD CONTROL ENGINEER — DATE

APPROVED BY:

FLOOD CONTROL ENGINEER — DATE

PROJ. ENGR.	DES. BY:	REV'D BY:	DRAWN BY:
T.R.	S.F.B./D.J.N.	J.B.	S.F.B./D.J.N.

SAN BERNARDINO COUNTY FLOOD CONTROL DISTRICT

FONTANA-RIALTO DRAINAGE SYSTEM

CACTUS BASINS NO. 3

TYPICAL SPILLWAY INVERT AND WALLS SECTIONS AND DETAILS

DATE	DEC. , 2007
SCALE	AS SHOWN
FILE NO.	2-104-
SHEET NO.	S-6