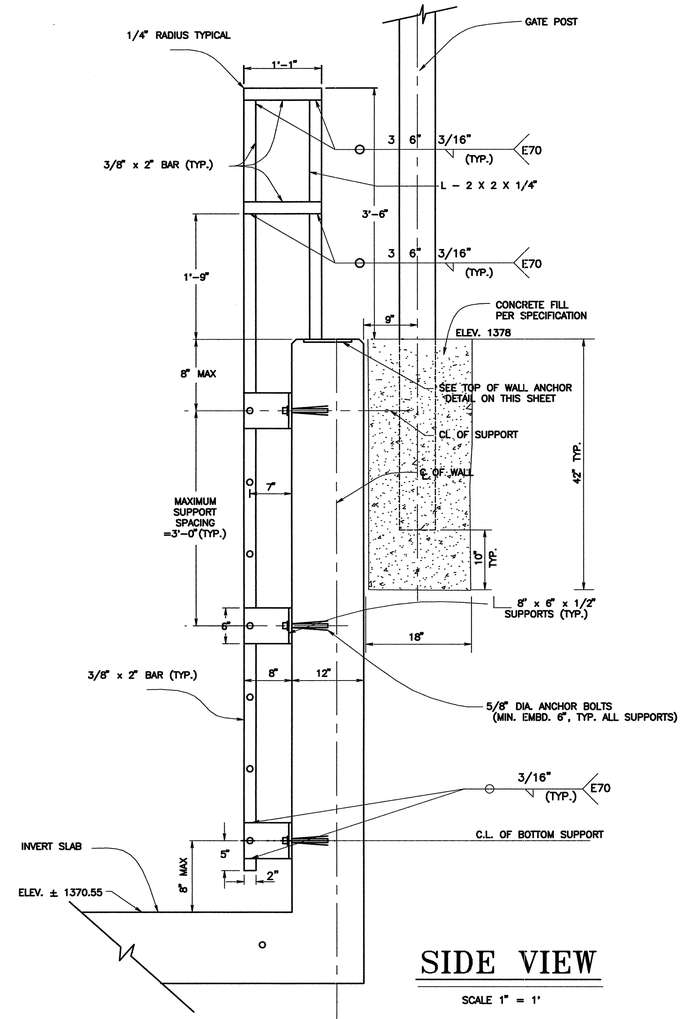

SIDE VIEW

SCALE 1" = 1'

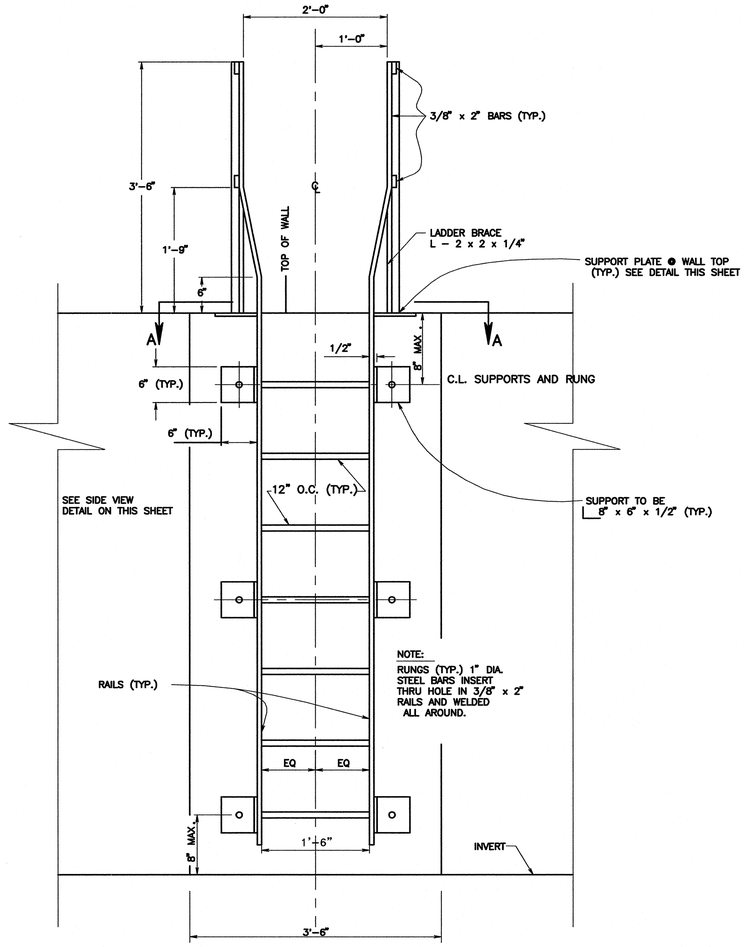

INVERT ACCESS LADDER ELEVATION VIEW

NOT TO SCALE

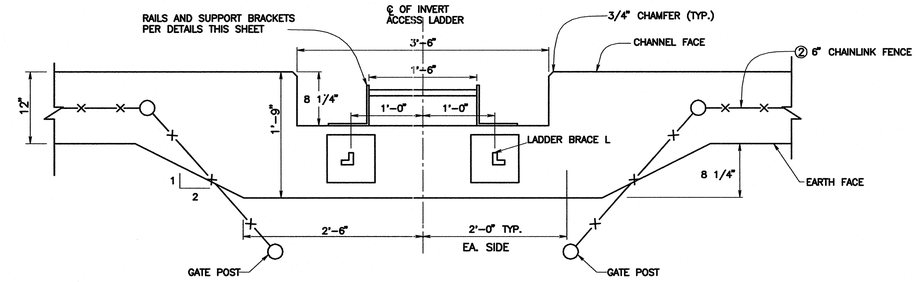

NOTE: 1) FENCING GATE NOT SHOWN

2) LOCATE GATE POST PER DETAILS UNLESS DIRECTED OTHERWISE BY THE ENGINEER

SECTION A-A INVERT ACCESS LADDER

SCALE 1" = 1'

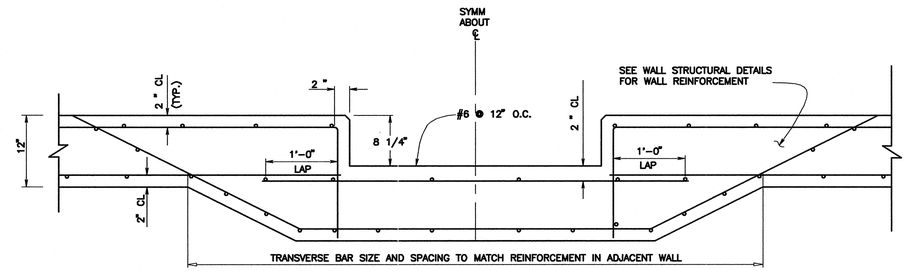

REINFORCEMENT

SCALE 1" = 1'

ALTERNATIVE WALL ANCHOR

NOT TO SCALE

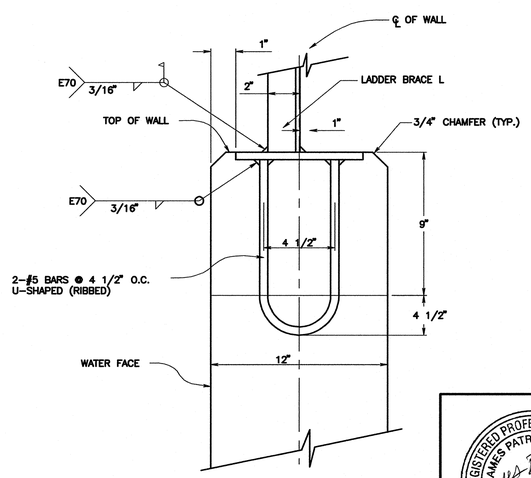

WALL ANCHOR

NOT TO SCALE

NOTES PERTAINING TO LADDER:

1. ALL STEEL MENBERS SHALL BE A-36 STEEL OR STRONGER AFTER TORQUING ANCHOR BOLTS, TACK WELD BOLTS TO PLATE AND ANGELS. ALL STEEL SURFACE SHALL BE GRINDED SMOOTH. ALL STEEL MEMBERS SHALL BE GALVANIZED AFTER FABRICATION. BOTTOM SUPPORT TO BE LOCATED AT A MAXIMUM OF 1'-0" FROM CHANNEL INVERT
2. FOR STRUCTURAL NOTES, SEE SHT. S-3

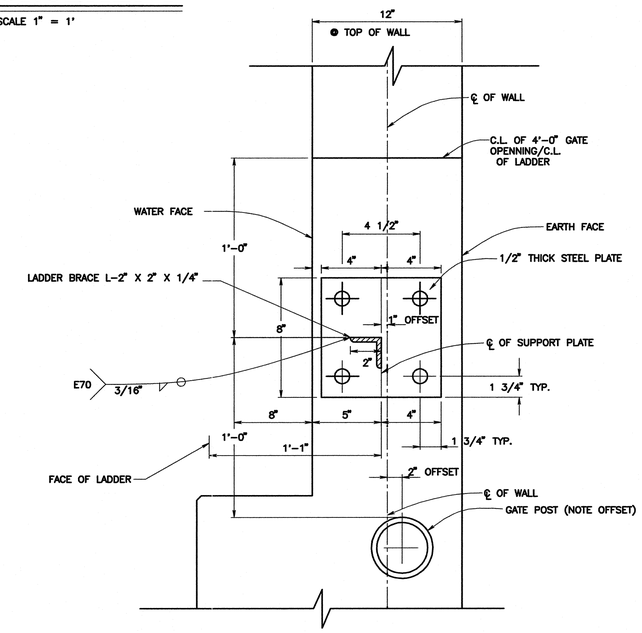

WALL SUPPORT PLAN VIEW

NOT TO SCALE

REGISTERED PROFESSIONAL ENGINEER JAMES PATRICK BORCUK No. 41807 Exp. 3/31/08 CIVIL STATE OF CALIFORNIA

SAN BERNARDINO COUNTY FLOOD CONTROL DISTRICT 1939 CALIFORNIA

REVISIONS			
MARK	DATE	DESCRIPTION	BY:

SUBMITTED BY: _____ CHIEF, ENGINEERING DIVISION DATE

RECOMMENDED BY: _____ ASSIST. FLOOD CONTROL ENGINEER DATE

APPROVED BY: _____ FLOOD CONTROL ENGINEER DATE

PROJ. ENGR.	DES. BY:	REV'D BY:	DRAWN BY:
T.R.	S.F.B./D.J.N.	J.B.	S.F.B./D.J.N.

SAN BERNARDINO COUNTY FLOOD CONTROL DISTRICT

FONTANA-RIALTO DRAINAGE SYSTEM

CACTUS BASIN NO. 3

SPILLWAY ACCESS LADDER DETAILS

DATE	SCALE	FILE NO.	SHEET NO.
DEC. , 2007	AS SHOWN	2-104-	S-7