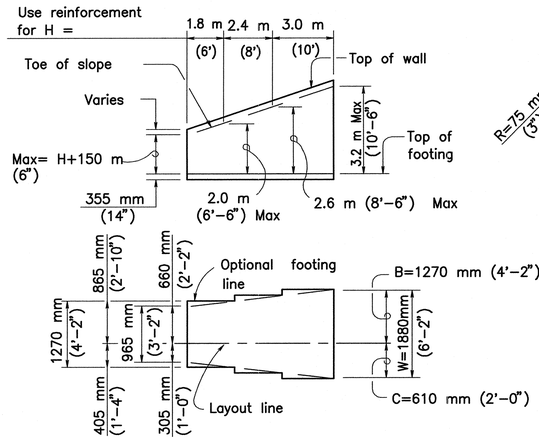

TYPICAL LAYOUT EXAMPLE

Number above "b" & "c" bars indicates distance from top of footing to upper end of bars. Bar cutoffs may be varied in increments of 150 mm (6").

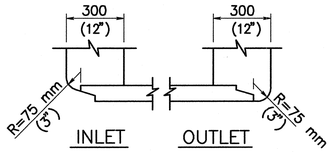

RC PIPE DETAILS

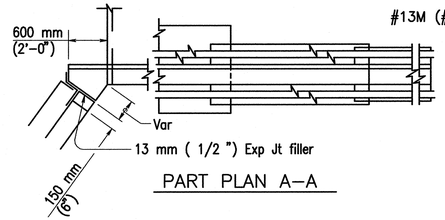

PART PLAN A-A

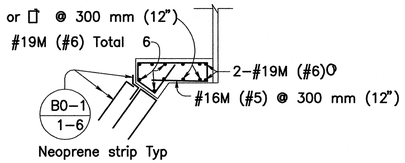

SECTION B-B

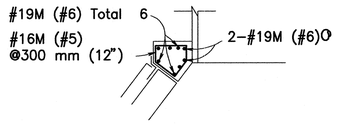

SECTION C-C

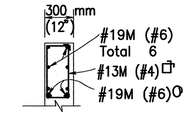

SECTION D-D

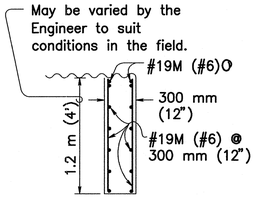

SECTION E-E

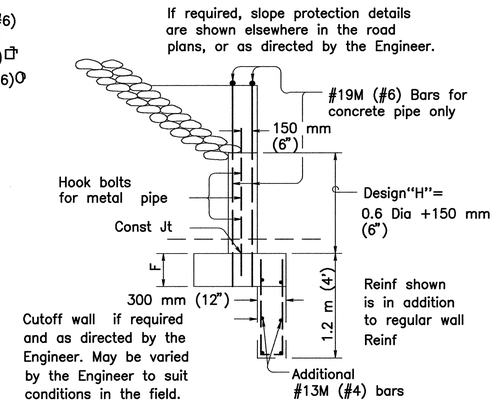

SECTION F-F

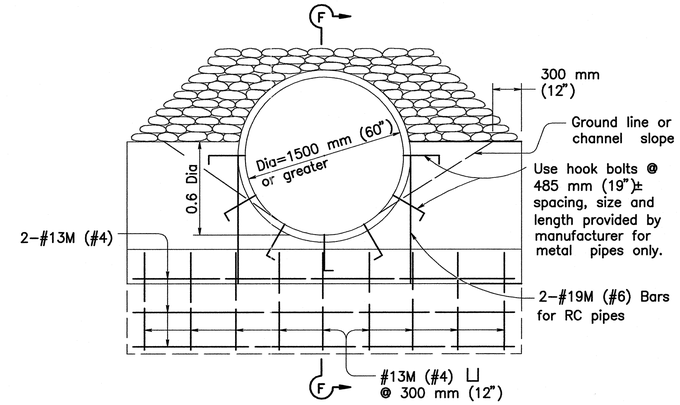

TYPE C WALL

NOTES

Unit Stresses: f = 165 MPa (24,000 psi), f_c= 9 MPa (1,300 psi), n = 10
Maximum Toe Pressure = 144 kPa (3 k/sf).
Elevation, length and angle of flare of wings may be varied by the Engineer to suit conditions encountered in the field. Walls designed for 600 mm (2') live load surcharge, 1 : 1.5 (1.1:5) sloping surcharge not to exceed 1.5 m (5') in elevation plus 600 mm (24") live load surcharge, or unlimited 1:2 (2:1) surcharge. If 1 : 1.5 (1 1/2 : 1) slope exceeds 1.5 m (5'), use Type 2 retaining wall. Wall height may be exceeded by 150 mm (6") before going to the next greater "H".

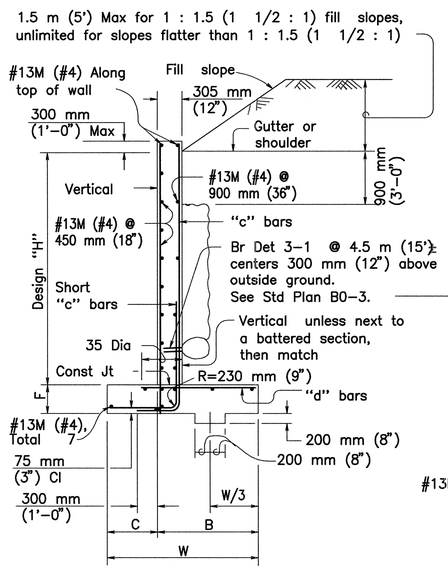

TYPICAL SECTION
H=1.2 m (4') THRU 3.7 m (12')

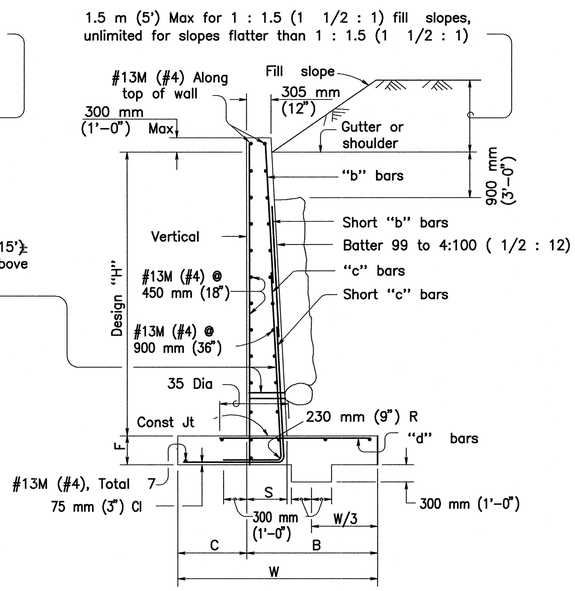

TYPICAL SECTION
H=4.0 m (13') THRU 6.1 m (20')

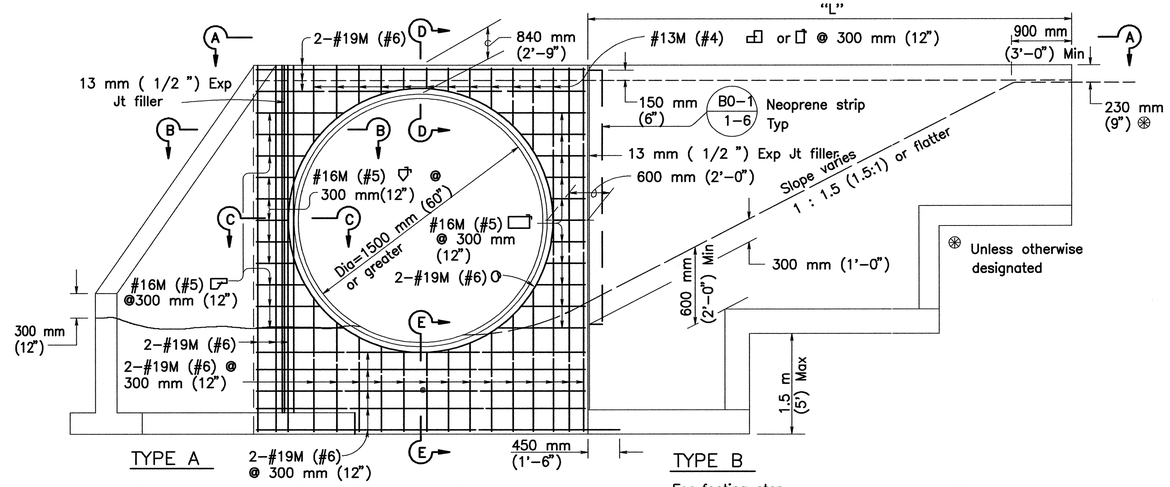

TYPE A

TYPE B

For footing step dimensions and reinforcement see "Footing Step" on Std Plan B3-8.

END ELEVATION

STRAIGHT WINGWALLS

STATE OF CALIFORNIA
DEPARTMENT OF TRANSPORTATION

PIPE CULVERT HEADWALLS, ENDWALLS AND WINGWALLS TYPES A, B AND C

These "Standard Plans for Construction of Local Streets and Roads" contain units in two systems of measurement: International System of Units (SI or "metric") and United States Standard Measures shown in the parentheses ( ) . The measurements expressed in the two systems are not necessarily equal or interchangeable. See the "Foreword" at the beginning of this publication.

SAN BERNARDINO COUNTY FLOOD CONTROL DISTRICT	DATE DEC. , 2007
FONTANA-RIALTO DRAINAGE SYSTEM	SCALE NO SCALE
HEADWALL AND WINGWALL STRUCTURAL DETAILS	FILE NO. 2-104-
CALTRANS STD.- D90A	SHEET NO. S-8

2002 DUAL UNITS STD PLAN D90A