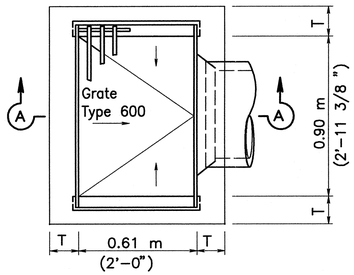

TYPE G1

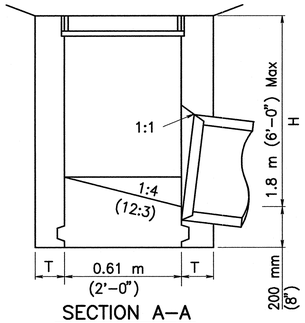

SECTION A–A

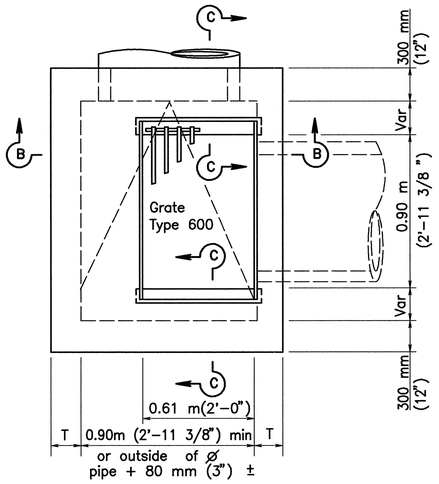

TYPE G2

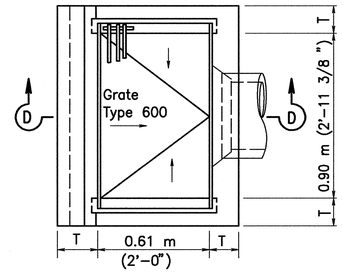

TYPE G3

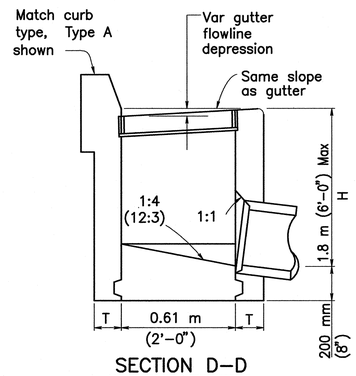

SECTION D–D

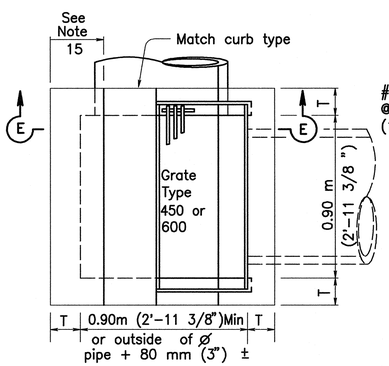

TYPE G4

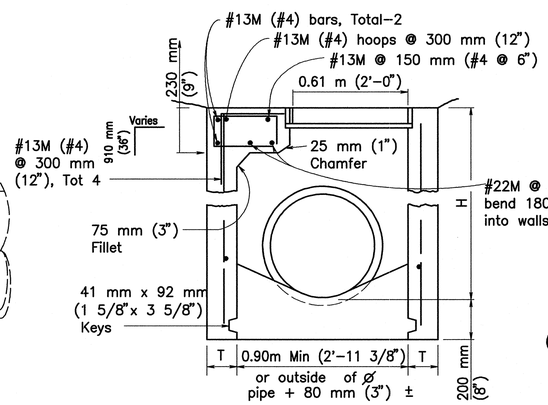

SECTION B–B

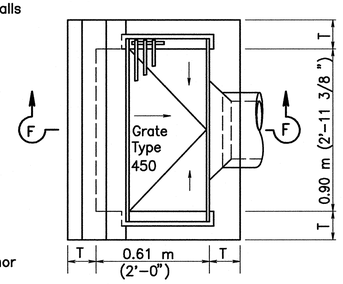

TYPE G5

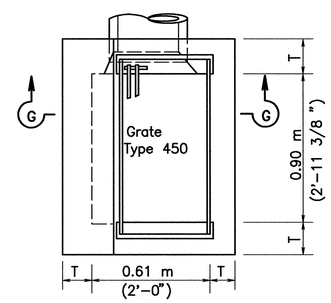

TYPE G6

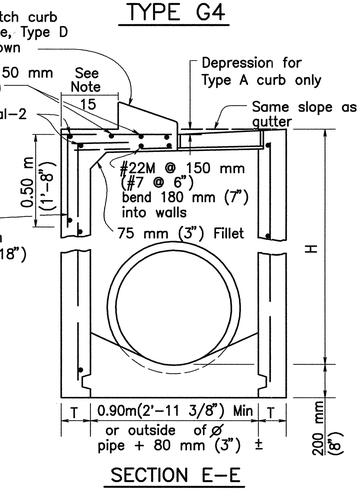

SECTION E–E

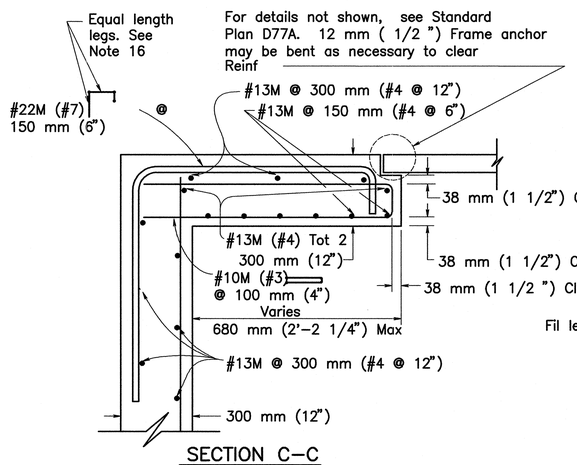

SECTION C–C

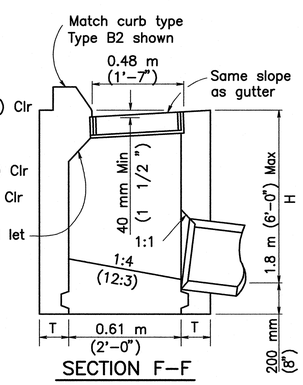

SECTION F–F

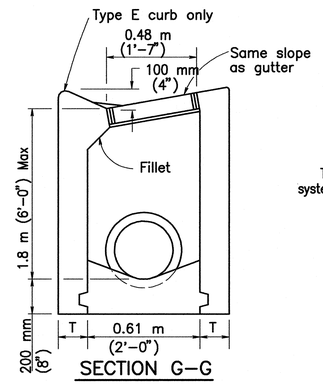

SECTION G–G

NOTES:

1. "H" is the difference in elevation between the outlet pipe flow line and the normal gutter grade line undepressed.
2. For "T" wall thickness, see Table A below.
3. Wall reinforcing not required when "H" is 2.5 m (8') or less and the unsupported width or length is 2.1 m (7') or less. Walls exceeding these limits shall be reinforced with #13M bars @ 450 mm+ (#4 @ 18")± centers placed 40 mm (1 1/2 ") clear to inside of box unless otherwise shown.
4. Inlet bottom reinforcing not required. See Standard Plan D74C for alternative reinforced bottom and alternative half round bottom.
5. Steps–None required where "H" is less than 0.75 m (30"). Where "H" is 0.75 m (30") or more, install steps with lowest rung 300 mm (12") above the floor and highest rung not more than 150 mm (6") below top of inlet. The distance between steps shall not exceed 300 mm (12") and shall be uniform throughout the length of the wall . Place steps in the wall without an opening. Step inserts may be substituted for the bar steps. Step inserts shall comply with State Industrial Safety requirements. See Standard Plan D74C for step details.
6. Details shown apply to both metal and concrete pipe.
7. Pipe(s) can be placed in any wall .
8. Curb section shall match adjacent curb.
9. Basin floors shall have wood trowel finish and a minimum slope of 1:4 (12:3) from all directions toward outlet pipe.
10. Galvanizing – See Standard Specifications or Special Provisions.
11. Cast–in–place or Precast alternative is optional with contractor, See Standard Specifications.
12. Set inlet so that grate bars are parallel to direction of principal surface flow.
13. See Standard Plans D77A and D77B for grate and frame details and masses (weights) of miscellaneous iron and steel.
14. See Standard Plan D78 for gutter depression details.
15. This dimension will vary with different grates, curbs types, box width and wall thickness.
16. Bar may be rotated as necessary to clear opening.

TABLE A

CONCRETE QUANTITIES

Type	H=0.90 m (3'–0") to 2.50 m (8'–0") (T=150 mm (6"))		H=2.51 m (8'–1") to 6.00 m (20'–0") (T=200 mm (8"))	
	H=0.90 m (3'– 0") m^3(CY)	Additional PCC per meter (foot) m^3(CY)	H=2.51 m (8'–1") m^3(CY)	Additional PCC per meter (foot) m^3(CY)
G–1	0.69 (0.95)	0.55 (0.220)	(1)	(1)
G–2*	1.31 (1.74)	0.99 (0.395)	3.32 (4.28)	1.14 (0.454)
G–3	0.75 (1.03)	0.55 (0.220)	(1)	(1)
G–4* (Type 600)	0.93 (1.27)	0.63 (0.257)	2.67 (3.48)	0.88 (0.360)
G–4* (Type 450)	0.95 (1.30)	0.63 (0.257)	2.69 (3.50)	0.88 (0.360)
G–5	0.75 (1.02)	0.55 (0.220)	(1)	(1)
G–6	0.76 (1.04)	0.55 (0.220)	(1)	(1)

(1) Maximum al lowable height 1.8 m (6'–0"). Table based on 200 mm (8") floor slab. No deductions are to be made to these quantities because of pipe openings, different floor alternatives or different curb types. * Quantities for type G–2 and G–4 inlets based on the minimum interior dimensions shown.

STATE OF CALIFORNIA
DEPARTMENT OF TRANSPORTATION

DRAINAGE INLETS

These "Standard Plans for Construction of Local Streets and Roads" contain units in two systems of measurement: International System of Units (SI or "metric") and United States Standard Measures shown in the parentheses ( ) . The measurements expressed in the two systems are not necessarily equal or interchangeable. See the "Foreword" at the beginning of this publiccation.

NO SCALE

2002 DUAL UNITS STD PLAN D73

SAN BERNARDINO COUNTY FLOOD CONTROL DISTRICT	DATE DEC. , 2007
FONTANA–RIALTO DRAINAGE SYSTEM	SCALE NO SCALE
DRAINAGE INLETS CALTRANS STD.– D73	FILE NO. 2–104–
	SHEET NO. S–12