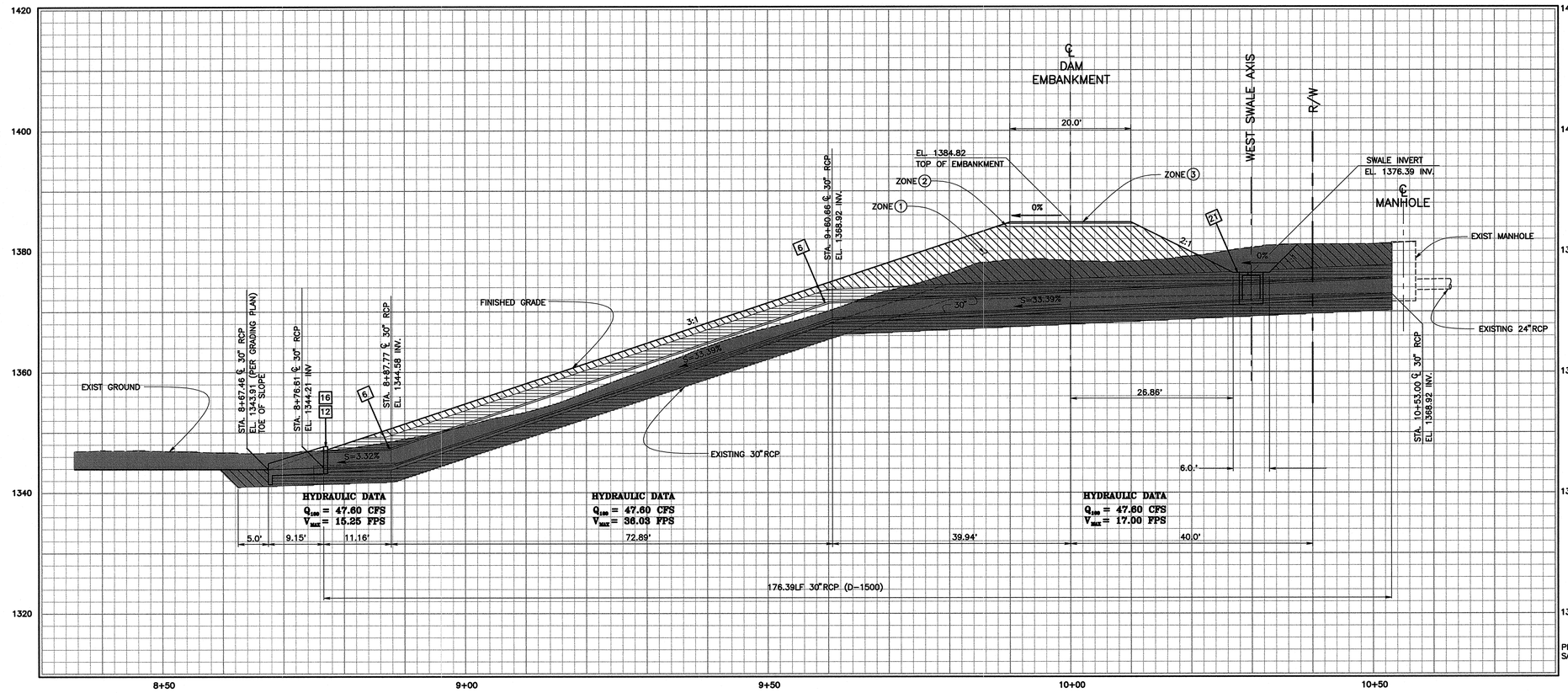

PROFILE – 30" RCP

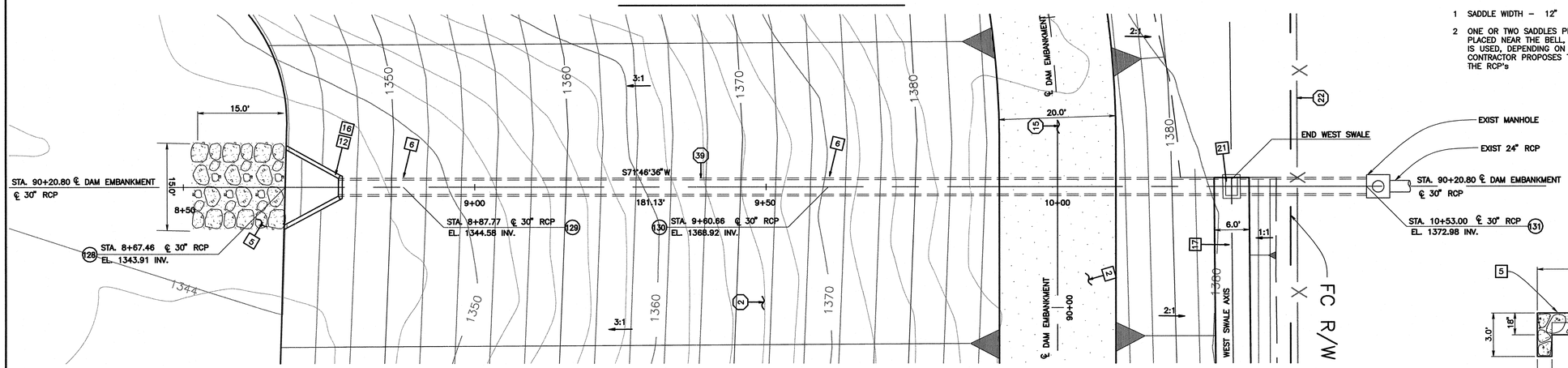

PLAN – 30" RCP

PROJECT COORDINATES				
	NORTH	EAST	ELEVATION	DESCRIPTION
128	1,868,173.58	6,746,723.86	1343.91 INV	STA. 8+67.46 ℄ 30" RCP
129	1,868167.23	6,746,704.57	1344.58 INV	STA. 8+87.77 G.B. ℄ 30" RCP
130	1,868,144.43	6,746,635.34	1368.92 INV	STA. 9+60.66 G.B. ℄ 30" RCP
131	1,868,115.56	6,746,547.63	1372.98INV	STA.10+53.00 ℄ 30" RCP

SCALE 1"=10'

0 10 20 30

CONSTRUCTION CALLOUTS:

- 2 3" AC PVMT ROAD SECTION PER (STD)
- 5 CONCRETED SPLASH PAD PER (STD)
- 6 CONCRETE COLLAR PER APWA SP 380-3 (STD)
- 12 HEADWALL WING-TYPE PER SBC STD. DRWG. 209 (STD)
- 16 SLOPED PROTECTION BARRIER PER APWA SP 360-0 (STD)
- 17 6' WIDE WEST EARTHEN SWALE PER (STD)
- 21 DRAINAGE INLET TYPE G1 FOR 30" RCP PER CALTRANS SP D73 (STD)

CONSTRUCTION NOTES:

- (2) CONSTRUCT EAST AND WEST EMBANKMENTS FOR SOUTH HALF OF BASIN NO. 3 PER PLAN ON SHEET C-3, PROFILE ON SHEETS P-1 TO P-3, SECTIONS ON SHEETS X-5 TO X-10 & X-13 TO X-16 AND SURVEY CONTROL DATA ON SHEET G-3
- (15) CONSTRUCT WEST AND EAST ACCESS ROAD PER PLAN, TYPICAL SECTIONS ON SHEETS C-2 TO C-4, AND SURVEY CONTROL DATA ON SHEETS G-2 TO G-4.
- (22) PROTECT IN PLACE EXISTING BOUNDARY CHAIN LINK FENCE
- (39) BREAK AND REPLACE EXISTING 30" RCP PER PLAN, PROFILE ON SHEETS SD-3, SECTION ON SHEET SD-3 AND SURVEY CONTROL DATA ON SHEET G-3.

MATERIAL ZONES:

- ZONE (1) MIXED, BORROW FROM BASIN EXCAVATION, 93% RELATIVE COMPACTION
- ZONE (2) CLASS 2 AGGREGATE BASE, 6" DEEP
- ZONE (3) 3" AC PAVEMENT (ON 6" OF ZONE 2, 95% RELATIVE COMPACTION)
- ZONE (5) CONCRETED ROCK SPLASH PAD, FACING CLASS, METHOD 'A' PLACEMENT
- EXCAVATION

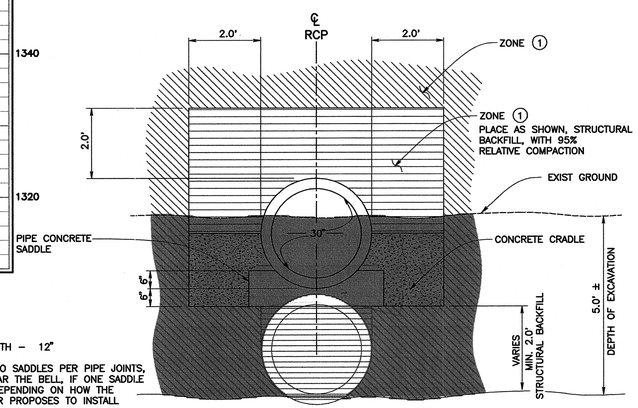

NOTES:

1. SADDLE WIDTH – 12"
2. ONE OR TWO SADDLES PER PIPE JOINTS, PLACED NEAR THE BELL, IF ONE SADDLE IS USED, DEPENDING ON HOW THE CONTRACTOR PROPOSES TO INSTALL THE RCP's

30" RCP PIPE BEDDING DETAIL

SCALE 1"=2'

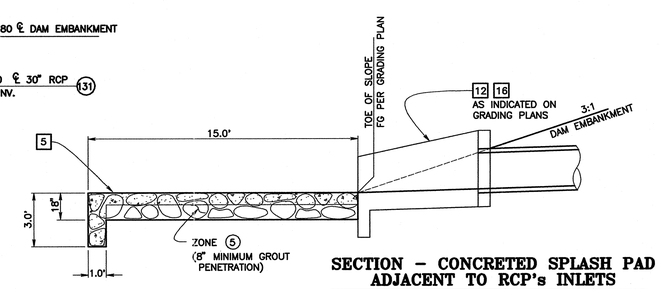

SECTION – CONCRETED SPLASH PAD ADJACENT TO RCP's INLETS

SCALE 1"=4'

REGISTERED PROFESSIONAL ENGINEER JAMES PATRICK BORCZUK No. 41807 Exp. 3/31/08 CIVIL STATE OF CALIFORNIA

SAN BERNARDINO COUNTY FLOOD CONTROL DISTRICT 1939 CALIFORNIA

REVISIONS			
MARK	DATE	DESCRIPTION	BY:

SUBMITTED BY: _____ CHIEF, ENGINEERING DIVISION DATE

RECOMMENDED BY: _____ ASSIST. FLOOD CONTROL ENGINEER DATE

APPROVED BY: _____ FLOOD CONTROL ENGINEER DATE

PROJ. ENGR.	DES. BY:	REV'D BY:	DRAWN BY:
T.R.	S.F.B./D.J.N.	J.B.	S.F.B./D.J.N.

SAN BERNARDINO COUNTY FLOOD CONTROL DISTRICT

FONTANA-RIALTO DRAINAGE SYSTEM

CACTUS BASIN NO. 3

30" RCP INLET TO BASIN NO. 3

DATE DEC. , 2007

SCALE AS SHOWN

FILE NO. 2-104-

SHEET NO. SD-3