SANTA ANA WATERSHED PROJECT AUTHORITY

SANTA ANA REGIONAL INTERCEPTOR (SARI) REPAIRS TO UNLINED RCP REACH IV-A (LOWER)

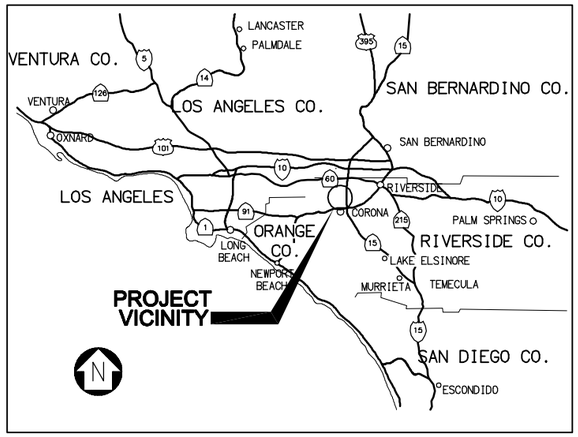

REGIONAL MAP

NO SCALE

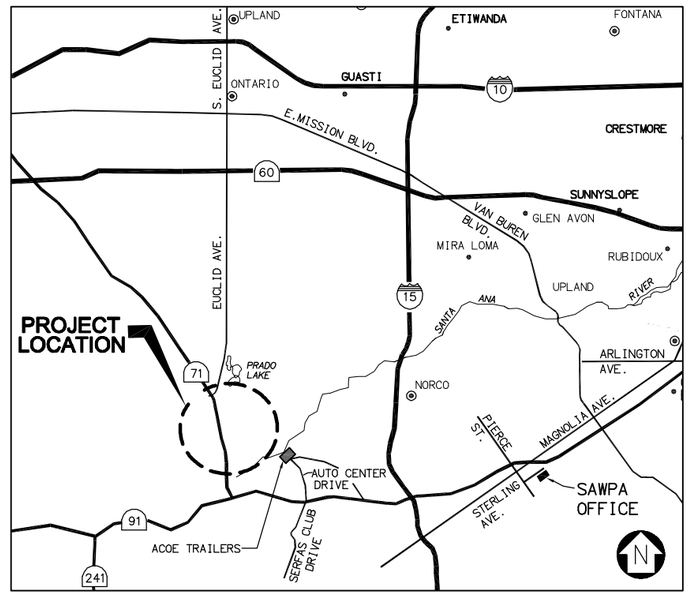

LOCATION MAP

NO SCALE

WORK TO BE DONE

1. THE CONTRACTOR SHALL PERFORM REHABILITATION OF THE EXISTING 42" RCP USING THE SLIP-LINING TECHNIQUE, REHABILITATION OF EXISTING MAINTENANCE ACCESS STRUCTURES AND RELATED INCIDENTAL WORK.
2. FLOW IN THE EXISTING PIPELINE CAN NOT BE INTERRUPTED AND IS ESTIMATED TO RANGE FROM 4 MGD TO 10 MGD, 24 HOURS PER DAY, 7 DAYS PER WEEK.
3. ALL WORK, EQUIPMENT AND VEHICLES SHALL REMAIN WITHIN THE TEMPORARY CONSTRUCTION ACCESS AREA AS INDICATED.
4. CLEAN PIPE AND REMOVE ALL DEBRIS FROM THE PIPELINE IN ACCORDANCE WITH THE SPECIFICATIONS.
5. PERFORM A PRE-CONSTRUCTION VIDEO INSPECTION OF THE PIPELINE AFTER THE CLEANING AND DEBRIS REMOVAL WORK HAS BEEN PERFORMED. A POST-CONSTRUCTION VIDEO INSPECTION SHALL ALSO BE PERFORMED IN ACCORDANCE WITH THE SPECIFICATIONS.
6. CONSTRUCTION TRAILERS MAY BE LOCATED ADJACENT TO MAS 4A-0180 OR IN THE VICINITY OF THE ACOE TRAILERS (SEE LOCATION MAP). REFER TO SPECS FOR REQUIREMENTS.

FINAL SUBMITTAL - JANUARY 4, 2010

APPROVED BY:

RICHARD E. HALLER, P.E. DATE
SANTA ANA WATERSHED PROJECT AUTHORITY
EXECUTIVE MANAGER OF ENGINEERING AND OPERATIONS

DIGALERT
DIAL TOLL FREE
1-800-422-4133
AT LEAST TWO DAYS BEFORE YOU DIG
UNDERGROUND SERVICE ALERT(USA) OF SOUTHERN CALIFORNIA

WARNING
0 1/2 1
IF THIS BAR DOES NOT MEASURE 1" THEN DRAWING IS NOT TO SCALE.

REGISTERED PROFESSIONAL ENGINEER JOHN H. ROBERTS No. 38217 Exp. 3/31/11 CIVIL STATE OF CALIFORNIA

REV	DATE	DESCRIPTION	APP
		RECORD DRAWINGS	

DESIGN BY:
DRAWN BY:
CHECKED BY:
DATE:

RBF CONSULTING
PLANNING ■ DESIGN ■ CONSTRUCTION
9755 CLAIREMONT MESA BLVD., SUITE 100
SAN DIEGO, CA 92124-1324
858.614.5000 • FAX 858.614.5001

SANTA ANA WATERSHED PROJECT AUTHORITY
11615 STERLING AVENUE • RIVERSIDE, CA 92503
(951) 354-4220 • www.sawpa.org

REPAIRS TO UNLINED RCP, REACH IV-A LOWER

TITLE SHEET

DRAWING NO. T-1
SHEET 1 OF 19 SHEETS
FILE NO.

H:\PDATA\25103871\CADD\Water\Div\Reach_A\3871L-001.dwg 01/04/10 - 2:55pm RBARTE

GENERAL NOTES:

1. THE CONTRACTOR SHALL CONDUCT APPROPRIATE FIELD INSPECTIONS TO DETERMINE EXISTING SITE CONDITIONS THAT MAY IMPACT THE PERFORMANCE OF THE WORK. ACCESS TO THE SITE PRIOR TO CONSTRUCTION SHALL BE COORDINATED THROUGH SAWPA. PROVIDE A MINIMUM OF TWO(2) WORKING DAY ADVANCE NOTICE PRIOR TO ANY PRE-CONSTRUCTION SITE VISIT. ONLY ONE PRE-BID SITE VISIT SHALL BE PERFORMED.

2. THE CONTRACTOR SHALL ASSUME SOLE AND COMPLETE RESPONSIBILITY FOR JOB SITE CONDITIONS DURING THE PERFORMANCE OF THE WORK, INCLUDING THE SAFETY OF ALL PERSONS AND PROPERTY. THIS REQUIREMENT SHALL APPLY CONTINUOUSLY AND NOT BE LIMITED TO NORMAL WORK HOURS.

3. THE CONTRACTOR SHALL PROVIDE SAWPA WITH A MINIMUM 7 WORKING DAY NOTICE PRIOR TO THE START OF WORK AND MOBILIZING TO THE SITE.

4. NO PERSON SHALL PERFORM ANY CONSTRUCTION ACTIVITY OR INSTALL ANY OBJECTS WITHIN THE PUBLIC RIGHTS-OF-WAY OR EASEMENTS OF THE CITY OF RIVERSIDE WITHOUT A VALID CONSTRUCTION PERMIT OR, A STREET OPENING PERMIT OR AN ENCROACHMENT PERMIT ISSUED BY THE CITY OF CHINO'S PUBLIC WORKS DEPARTMENT.

5. CONSTRUCTION SHALL BE IN ACCORDANCE WITH THE CITY OF CHINO DEPARTMENT OF PUBLIC WORKS, STANDARD DRAWINGS, ITS SUPPLEMENTAL NOTES AND THE STANDARD SPECIFICATIONS FOR PUBLIC WORKS CONSTRUCTION, CURRENT EDITION.

6. THE CONTRACTOR SHALL BE RESPONSIBLE FOR PRESERVING OR RE-ESTABLISHING AND REFERENCING SURVEY MONUMENTS DESTROYED, DISTURBED OR BURIED AS A RESULT OF CONSTRUCTION SHOWN HEREON.

7. ANY TRAFFIC CONTROL STRIPING OBLITERATED AND/OR BADLY WORN DURING CONSTRUCTION SHALL BE RESTORED BY THE CONTRACTOR WITHIN FIVE DAYS AFTER NOTIFICATION FROM THE CITY INSPECTORS.

8. THE CONTRACTOR SHALL CALL IN A LOCATION REQUEST TO UNDERGROUND SERVICE ALERT (USA), PHONE # 1-800-227-2600, TWO WORKING DAYS BEFORE DIGGING. NO CONSTRUCTION PERMIT WILL BE ISSUED BY THE PUBLIC WORKS DEPARTMENT INVOLVING EXCAVATION FOR UNDERGROUND FACILITIES UNLESS THE APPLICANT HAS BEEN PROVIDED AN, INQUIRY IDENTIFICATION NUMBER BY U.S.A.

9. CONTRACTOR IS TO VERIFY EXISTING SEWER RIM AND INVERT ELEVATIONS PRIOR TO CONSTRUCTION.

10. LOCATION OF LATERALS TO BE CONFIRMED IN THE FIELD, AVOID CONFLICT WITH PROPOSED AND/OR EXISTING FACILITIES.

11. 20 FOOT CONSTRUCTION ACCESS ROAD INDICATED ON PLANS. EXISTING ROAD IS 10 FEET WIDE. CONTRACTOR SHALL CLEAR UP TO, BUT IN NO CASE, MORE THAN 10 ADDITIONAL FEET IN WIDTH.

12. CONTRACTOR SHALL PROVIDE ONE-WEEK ADVANCE NOTICE TO THE ARMY CORPS OF ENGINEERS PRADO DAM TENDER (LUIS MUNOZ) BEFORE MOBILIZATION TO THE SITE.

13. THE CONTRACTOR IS ADVISED THAT THE PROJECT WORK AREA IS WITHIN A HIGH HAZARD FLOOD ZONE AND IS SUBJECT TO INUNDATION. THE CONTRACTOR MAY BE REQUIRED TO DE-MOBILIZE FROM THE PROJECT AREA DUE TO IMMINENT RAIN WARNING IN THE WATERSHED.

14. THE CONTRACTOR SHALL UTILIZE THE EXISTING UNPAVED ACCESS ROAD TO THE GREATEST EXTENT POSSIBLE. CLEARING AREAS INDICATED SHALL BE CLEARED AND GRUBBED AS DESCRIBED IN THE SPECIFICATIONS. WHERE THE EXISTING ACCESS ROAD MUST BE WIDENED TO PERMIT CONSTRUCTION ACCESS, THE CLEARED WIDTH SHALL NOT BE MORE THAN 20 FEET AS INDICATED ON THE PLANS.

15. PVC LARGE DIAMETER COUPLINGS SHALL BE FABRICATED FROM 3/8" THICK PVC AND PROVIDED WITH A MINIMUM OF TWO SERIES 300 (18-8) STAINLESS STEEL T-BOLT CLAMPS TO PROVIDE 150 INCH/POUNDS OF SEALING PRESSURE. COUPLINGS SHALL BE MANUFACTURED BY FERNCO INC. OR OWNER APPROVED EQUAL. PROVIDE SHOP DRAWING FOR OWNER APPROVAL.

16. SOUND BARRIER SHALL BE A MINIMUM OF 12 FEET IN HEIGHT, CONTINUOUS FOR THE LENGTH INDICATED ON THE PLAN AND SHALL PROVIDE A SOLID WALL BARRIER FOR THE FULL HEIGHT. CONTRACTOR SHALL SUBMIT A SOUND BARRIER PLAN FOR APPROVAL BY SAWPA. ACCEPTABLE MATERIALS INCLUDE, BUT NOT LIMITED TO WOODEN PILES COVERED BY PLYWOOD OR STRAWBALES. CONTRACTOR SHALL MAINTAIN THE BARRIER WHILE WORK IS BEING PERFORMED BETWEEN MARCH 1 AND OCTOBER 1.

ABBREVIATIONS

ABAND'D	ABANDONED
ACOE	ARMY CORPS OF ENGINEERS
ADD'L	ADDITIONAL
℄	CENTERLINE
CLR	CLEAR
CLSM	CONTROLLED LOW STRENGTH MATERIAL
CML&C	CEMENT MORTAR LINED & COATED
CMU	CEMENT MASONRY UNIT
CONC.	CONCRETE
CONT.	CONTINUOUS
DEFL.	DEFLECTION
DIA.	DIAMETER
D.I.	DUCTILE IRON
DIP	DUCTILE IRON PIPE
DWG	DRAWING
EL.	ELEVATION
E.W.	EACH WAY
EX. EXIST	EXISTING
FLG('D)	FLANGE(D)
G.W.	GROUNDWATER
HDPE	HIGH DENSITY POLYETHYLENE PIPE
HORIZ.	HORIZONTAL
HT.	HEIGHT
I.D.	INSIDE DIAMETER
IE	INVERT ELEVATION
LAT	LATERAL
MAS	MAINTENANCE ACCESS STRUCTURE
MAX.	MAXIMUM
MH	MANHOLE
MIN	MINIMUM
NTS	NOT TO SCALE
O.C.	ON CENTER
ℙ	PROPERTY LINE
PLRCP	PRESTRESSED REINFORCED CONCRETE PIPE
PVC	POLYVINYL CHLORIDE
RCP	REINFORCED CONCRETE PIPE
RD	ROAD
REHAB'D	REHABILITATED
RPMP	REINFORCED POLYMER MORTAR PIPE
R/W	RIGHT OF WAY
SAWPA	SANTA ANA WATERSHED PROJECT AUTHORITY
SPEC.(S.)	SPECIFICATION(S)
SST	STAINLESS STEEL
STA	STATION
TEMP	TEMPORARY
TYP.	TYPICAL
W/	WITH
VERT.	VERTICAL

LEGEND

- ACCESS PIT
- CLOSURE PIT
- PROPOSED MAS
- EXISTING MAS TO BE REHAB'D
- B-3 — SOIL BORING LOCATION (SEE SHEET C-17)
- SOUND BARRIER (SEE NOTE 16)
- CONSTRUCTION ACCESS ROAD (SEE NOTE 11)
- AREA TO BE CLEARED AND GRUBED BY CONTRACTOR

BASIS OF SURVEY:

BASIS OF COORDINATES: THE BASIS OF COORDINATES FOR THIS PROJECT IS BASED UPON NORTH AMERICAN DATUM OF 1927, CALIFORNIA STATE PLANE COORDINATE SYSTEM, ZONE 5 LAMBERT PROJECTION.

BENCHMARK: TOP OF MAS #4A-0180. STA.166+89.13, RIM ELEVATION = 514.00

SHEET INDEX

SHEET NO.	REF. NO.	SHEET TITLE
1	T-1	TITLE SHEET
2	G-1	NOTES
3	C-1	STA 1+00 TO STA 9+00
4	C-2	STA 9+00 TO STA 26+00
5	C-3	STA 26+00 TO STA 44+00
6	C-4	STA 44+00 TO STA 60+00
7	C-5	STA 60+00 TO STA 77+00
8	C-6	STA 77+00 TO STA 92+00
9	C-7	STA 92+00 TO STA 109+00
10	C-8	STA 109+00 TO STA 126+00
11	C-9	STA 126+00 TO STA 144+00
12	C-10	STA 144+00 TO STA 162+00
13	C-11	STA 162+00 TO STA 166+89
14	C-12	EXISTING MAS
15	C-13	REHAB EXISTING MAS
16	C-14	GENERAL DETAILS
17	C-15	ACCESS PIT DETAILS
18	C-16	MAS 4D-0010 AND MAS 4A-0180
19	C-17	SOIL BORING LOGS

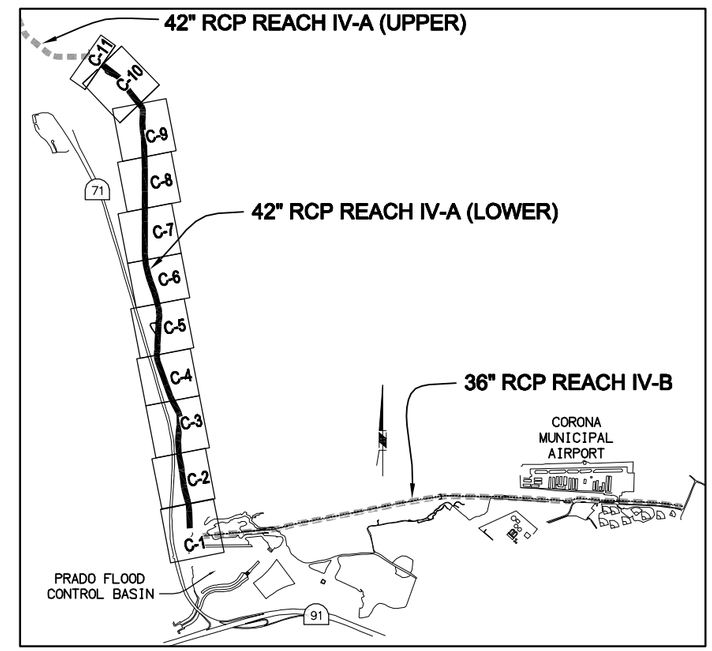

KEY MAP SHEET INDEX
NO SCALE

WARNING
0 1/2 1
IF THIS BAR DOES NOT MEASURE 1" THEN DRAWING IS NOT TO SCALE.

REV	DATE	DESCRIPTION	APP
		RECORD DRAWINGS	

DESIGN BY:
DRAWN BY:
CHECKED BY:
DATE:

REGISTERED PROFESSIONAL ENGINEER JOHN H. HARRIS No. 38217 Exp. 3/31/11 CIVIL STATE OF CALIFORNIA

RBF CONSULTING — PLANNING ■ DESIGN ■ CONSTRUCTION
9755 CLAIREMONT MESA BLVD., SUITE 100
SAN DIEGO, CA 92124-1324
858.614.5000 • FAX 858.614.5001

SANTA ANA WATERSHED PROJECT AUTHORITY
11615 STERLING AVENUE • RIVERSIDE, CA 92503
(951) 354-4220 • www.sawpa.org

REPAIRS TO UNLINED RCP, REACH IV-A LOWER

GENERAL NOTES

DRAWING NO. G-1
SHEET: 2 OF 19 SHEETS
FILE NO.

H:\PDATA\25103871\CADD\Water\Div\Reach_A\38711-002.dwg 01/04/10 - 2:55pm RBARTE

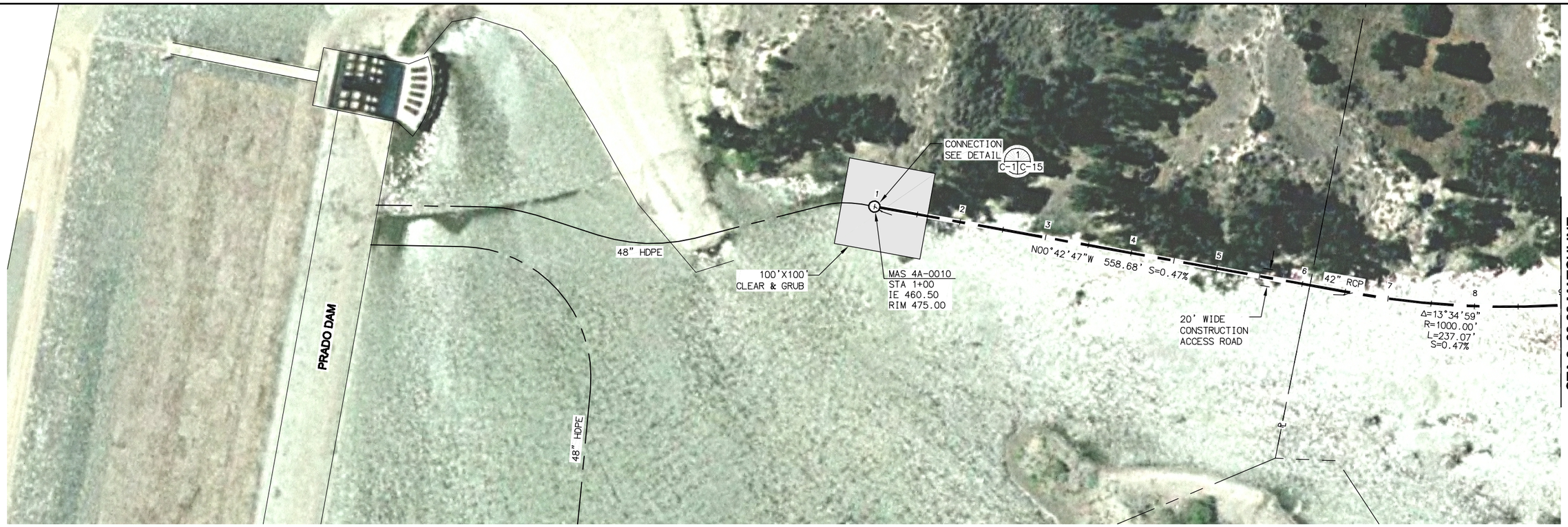

PLAN: REACH IV-A LOWER

SCALE 1"=60'

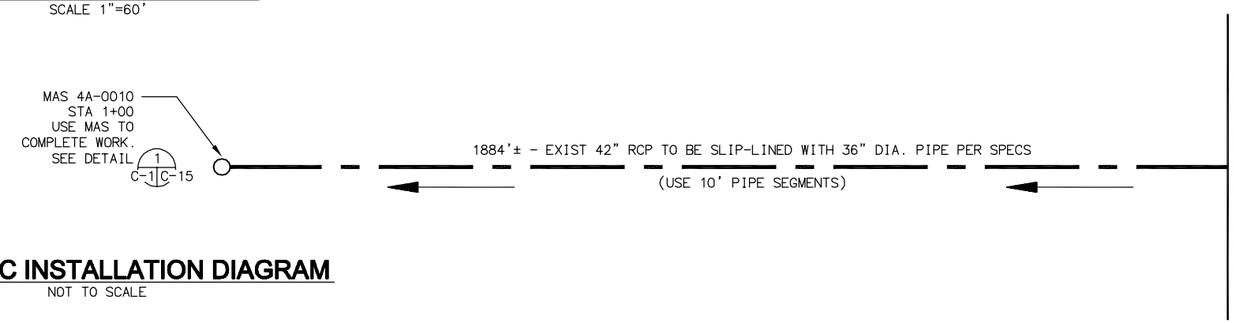

SCHEMATIC INSTALLATION DIAGRAM

NOT TO SCALE

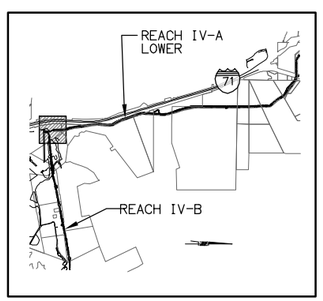

KEY MAP

NOT TO SCALE

LEGEND

SLIP-LINE DIRECTION

SCALE: 1"=60'

60 0 60 120 180

SCALE: 1"=60'

WARNING
0 1/2 1
IF THIS BAR DOES NOT MEASURE 1" THEN DRAWING IS NOT TO SCALE.

REGISTERED PROFESSIONAL ENGINEER JOHN H. HARRIS No. 38217 Exp. 3/31/11 CIVIL STATE OF CALIFORNIA

REV	DATE	DESCRIPTION	APP
		RECORD DRAWINGS	

DESIGN BY:
DRAWN BY:
CHECKED BY:
DATE:

RBF CONSULTING
PLANNING ■ DESIGN ■ CONSTRUCTION
9755 CLAIREMONT MESA BLVD., SUITE 100
SAN DIEGO, CA 92124-1324
858.614.5000 • FAX 858.614.5001

SANTA ANA WATERSHED PROJECT AUTHORITY
11615 STERLING AVENUE • RIVERSIDE, CA 92503
(951) 354-4220 • www.sawpa.org

REPAIRS TO UNLINED RCP, REACH IV-A LOWER

REACH IV-A LOWER
STATION 1+00 TO STATION 9+00

DRAWING NO. C-1
SHEET 3 OF 19 SHEETS
FILE NO.

H:\PDATA\25103871\CADD\Water\Div\Reach_A\38711L-003.dwg 12/23/09 - 11:35am RBARTE

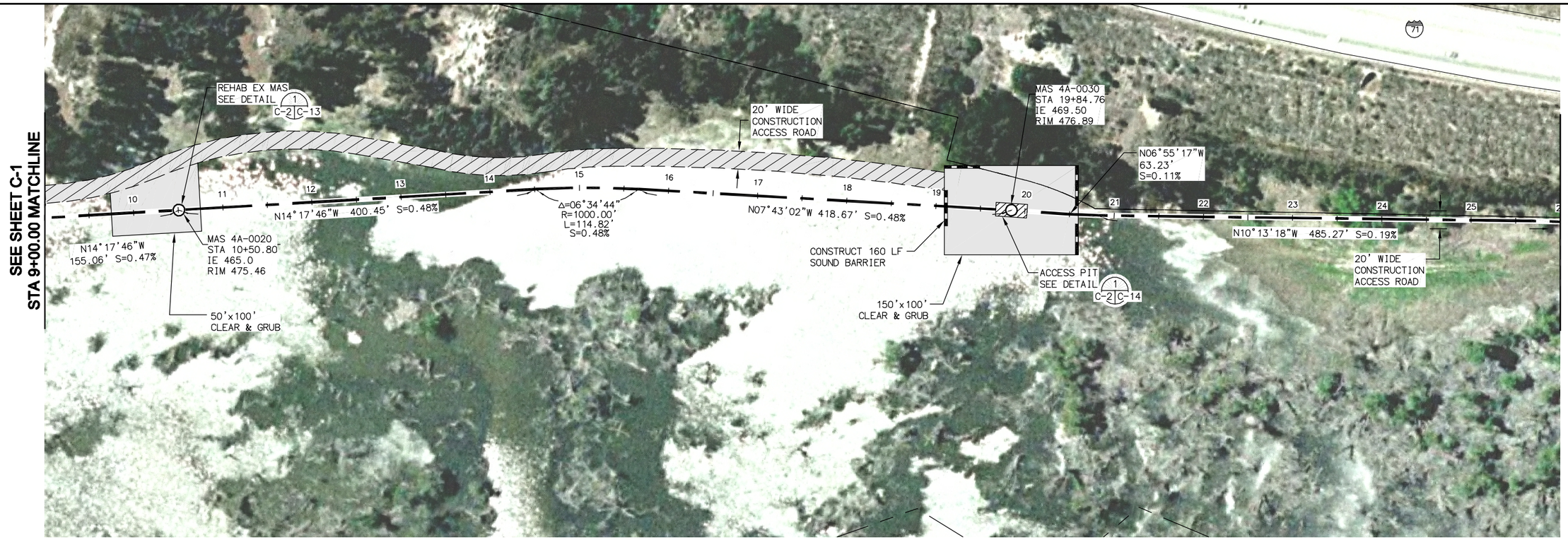

PLAN: REACH IV-A LOWER

SCALE 1"=60'

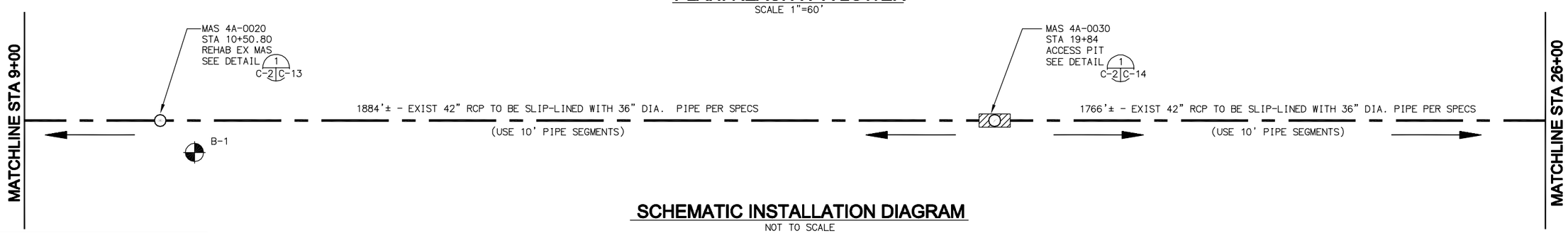

SCHEMATIC INSTALLATION DIAGRAM

NOT TO SCALE

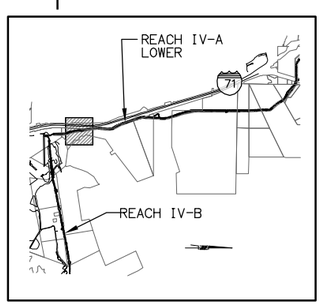

KEY MAP

NOT TO SCALE

LEGEND

SLIP-LINE DIRECTION

SCALE: 1"=60'

60 0 60 120 180

SCALE: 1"=60'

WARNING
0 1/2 1
IF THIS BAR DOES NOT MEASURE 1" THEN DRAWING IS NOT TO SCALE.

REGISTERED PROFESSIONAL ENGINEER JOHN H. HARRIS No. 38217 Exp. 3/31/11 CIVIL STATE OF CALIFORNIA

REV	DATE	DESCRIPTION	APP
		RECORD DRAWINGS	

DESIGN BY:
DRAWN BY:
CHECKED BY:
DATE:

RBF CONSULTING
PLANNING ■ DESIGN ■ CONSTRUCTION
9755 CLAIREMONT MESA BLVD., SUITE 100
SAN DIEGO, CA 92124-1324
858.614.5000 • FAX 858.614.5001

SANTA ANA WATERSHED PROJECT AUTHORITY
11615 STERLING AVENUE • RIVERSIDE, CA 92503
(951) 354-4220 • www.sawpa.org

REPAIRS TO UNLINED RCP, REACH IV-A LOWER

REACH IV-A LOWER
STATION 9+00 TO STATION 26+00

DRAWING NO. C-2
SHEET: 4 OF 19 SHEETS
FILE NO.

H:\PDATA\25103871\CADD\Water\Div\Reach_A\38711L-004.dwg 01/04/10 - 2:57pm RBARTE

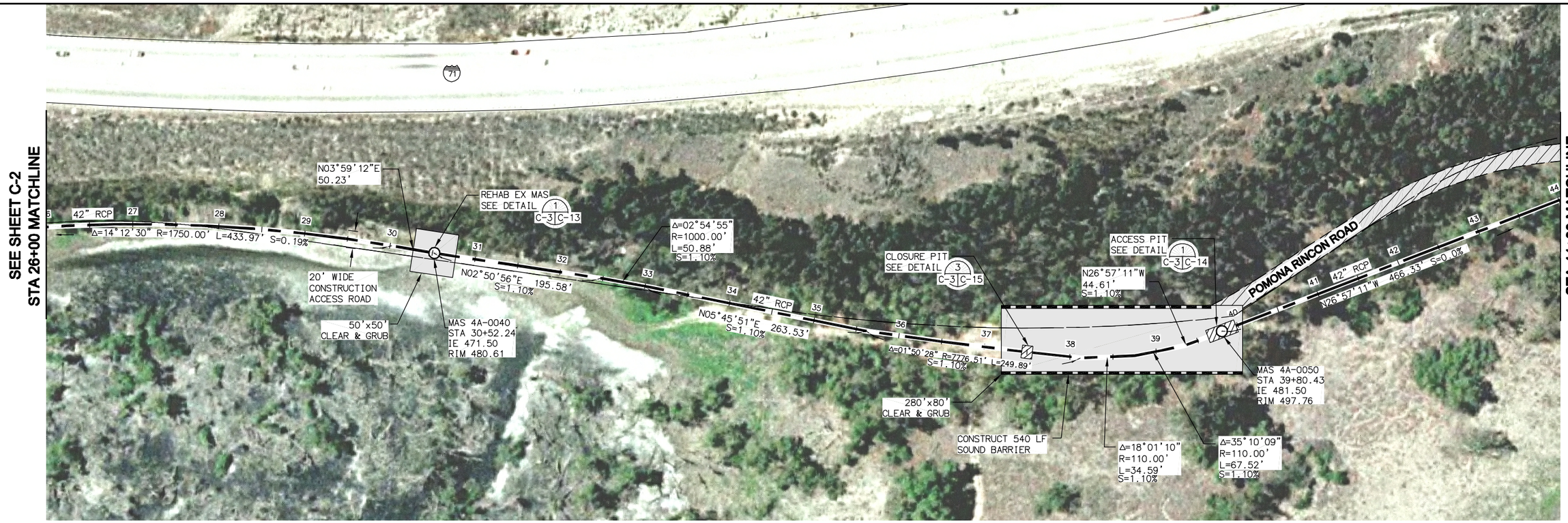

PLAN: REACH IV-A LOWER

SCALE 1"=60'

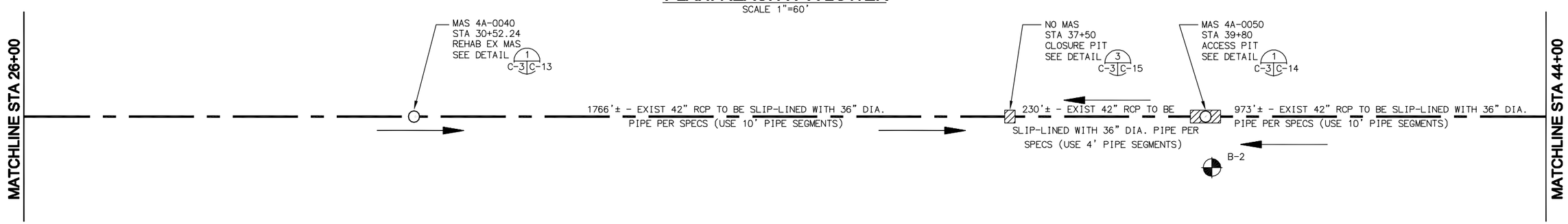

SCHEMATIC INSTALLATION DIAGRAM

NOT TO SCALE

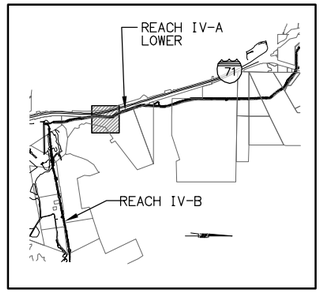

KEY MAP

NOT TO SCALE

LEGEND

SLIP-LINE DIRECTION

SCALE: 1"=60'

60 0 60 120 180

SCALE: 1"=60'

WARNING
0 1/2 1
IF THIS BAR DOES NOT MEASURE 1" THEN DRAWING IS NOT TO SCALE.

REGISTERED PROFESSIONAL ENGINEER JOHN H. HARRIS No. 38217 Exp. 3/31/11 CIVIL STATE OF CALIFORNIA

REV	DATE	DESCRIPTION	APP
		RECORD DRAWINGS	

DESIGN BY:
DRAWN BY:
CHECKED BY:
DATE:

RBF CONSULTING
PLANNING ■ DESIGN ■ CONSTRUCTION
9755 CLAIREMONT MESA BLVD., SUITE 100
SAN DIEGO, CA 92124-1324
858.614.5000 • FAX 858.614.5001

SANTA ANA WATERSHED PROJECT AUTHORITY
11615 STERLING AVENUE • RIVERSIDE, CA 92503
(951) 354-4220 • www.sawpa.org

REPAIRS TO UNLINED RCP, REACH IV-A LOWER

REACH IV-A LOWER
STATION 26+00 TO STATION 44+00

DRAWING NO. C-3
SHEET 5 OF 19 SHEETS
FILE NO.

H:\PDATA\25103871\CADD\Water\Div\Reach_A\38711L-005.dwg 12/23/09 - 11:36am RBARTE

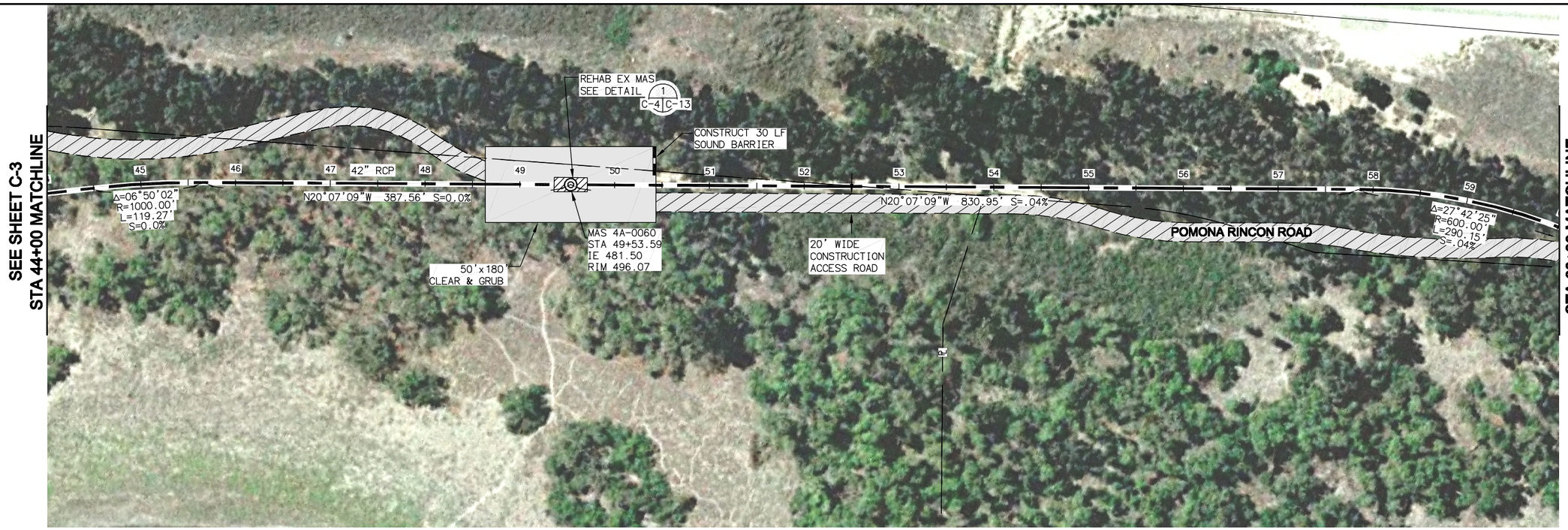

PLAN: REACH IV-A LOWER

SCALE 1"=60'

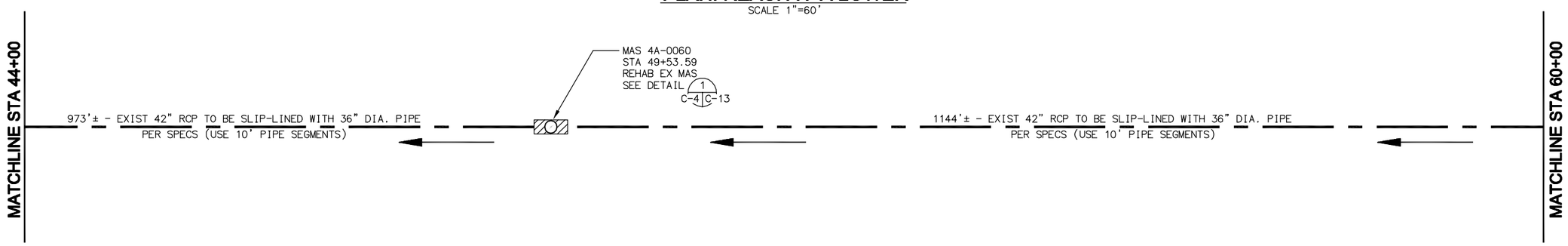

SCHEMATIC INSTALLATION DIAGRAM

NOT TO SCALE

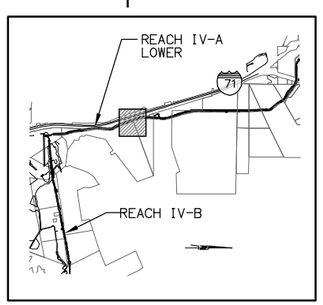

KEY MAP

LEGEND

SLIP-LINE DIRECTION

SCALE: 1"=60'

60 0 60 120 180

SCALE: 1"=60'

WARNING
0 1/2 1
IF THIS BAR DOES NOT MEASURE 1" THEN DRAWING IS NOT TO SCALE.

REGISTERED PROFESSIONAL ENGINEER JOHN H. HARRIS No. 38217 Exp. 3/31/11 CIVIL STATE OF CALIFORNIA

REV	DATE	DESCRIPTION	APP
		RECORD DRAWINGS	

DESIGN BY:
DRAWN BY:
CHECKED BY:
DATE:

RBF CONSULTING
PLANNING ■ DESIGN ■ CONSTRUCTION
9755 CLAIREMONT MESA BLVD., SUITE 100
SAN DIEGO, CA 92124-1324
858.614.5000 • FAX 858.614.5001

SANTA ANA WATERSHED PROJECT AUTHORITY
11615 STERLING AVENUE • RIVERSIDE, CA 92503
(951) 354-4220 • www.sawpa.org

REPAIRS TO UNLINED RCP, REACH IV-A LOWER

REACH IV-A LOWER
STATION 44+00 TO STATION 60+00

DRAWING NO. C-4
SHEET 6 OF 19 SHEETS
FILE NO.

H:\PDATA\25103871\CADD\Water\Div\Reach_A\38711L-006.dwg 12/23/09 - 11:37am RBARTE

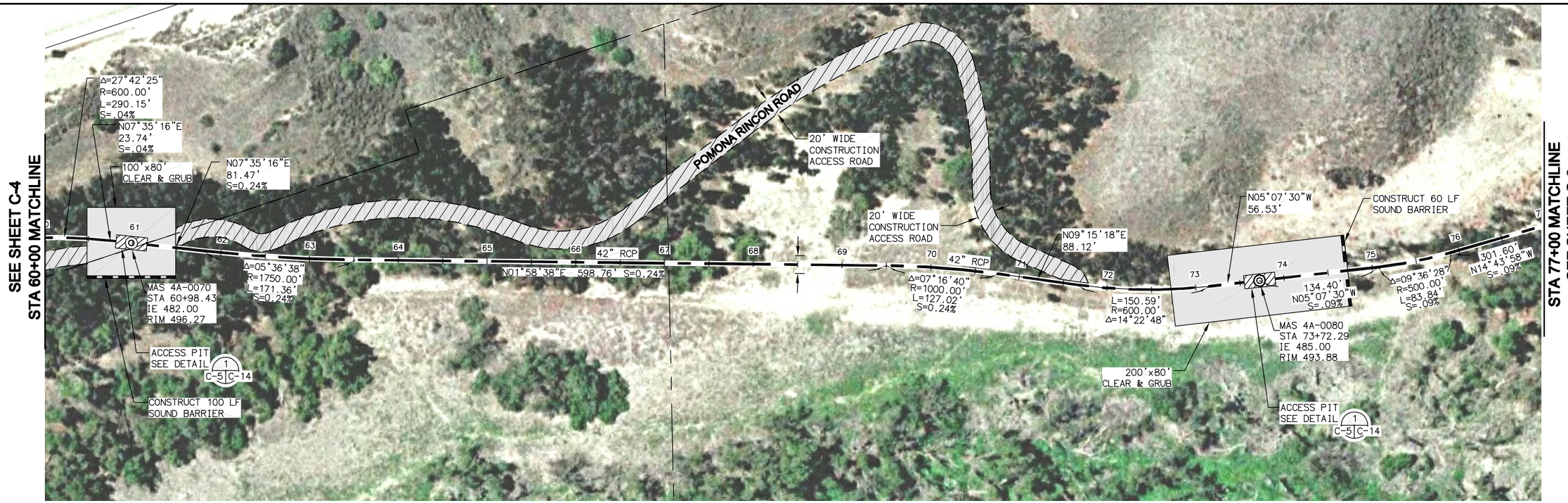

PLAN: REACH IV-A LOWER

SCALE 1"=60'

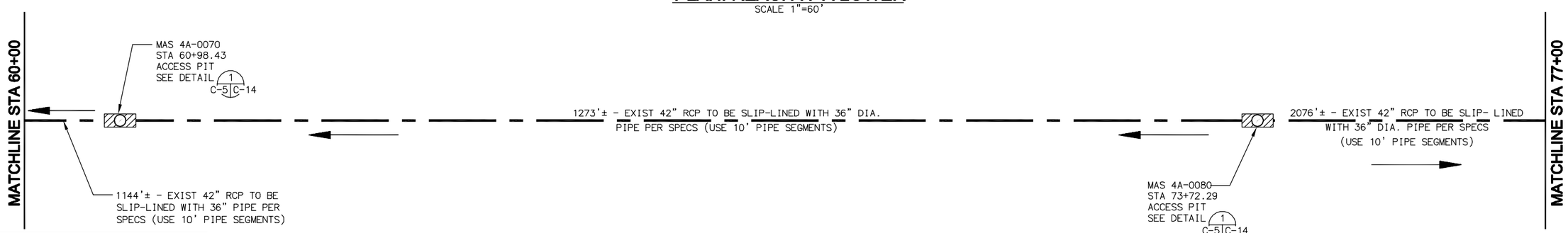

SCHEMATIC INSTALLATION DIAGRAM

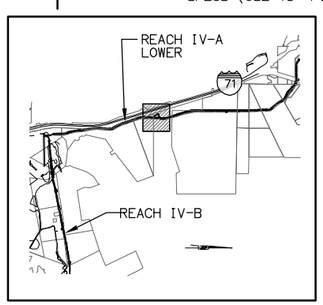

KEY MAP

NOT TO SCALE

LEGEND

SLIP-LINE DIRECTION

SCALE: 1"=60'

60 0 60 120 180

SCALE: 1"=60'

WARNING
0 1/2 1
IF THIS BAR DOES NOT MEASURE 1" THEN DRAWING IS NOT TO SCALE.

REGISTERED PROFESSIONAL ENGINEER JOHN H. HARRIS No. 38217 Exp. 3/31/11 CIVIL STATE OF CALIFORNIA

REV	DATE	DESCRIPTION	APP
		RECORD DRAWINGS	

DESIGN BY:
DRAWN BY:
CHECKED BY:
DATE:

RBF CONSULTING
PLANNING ■ DESIGN ■ CONSTRUCTION
9755 CLAIREMONT MESA BLVD., SUITE 100
SAN DIEGO, CA 92124-1324
858.614.5000 • FAX 858.614.5001

SANTA ANA WATERSHED PROJECT AUTHORITY
11615 STERLING AVENUE • RIVERSIDE, CA 92503
(951) 354-4220 • www.sawpa.org

REPAIRS TO UNLINED RCP, REACH IV-A LOWER

REACH IV-A LOWER
STATION 60+00 TO STATION 77+00

DRAWING NO. C-5
SHEET 7 OF 19 SHEETS
FILE NO.

H:\PDATA\25103871\CADD\Water\Div\Reach_A\38711L-007.dwg 12/23/09 - 11:45am RBARTE

PLAN: REACH IV-A LOWER

SCALE 1"=60'

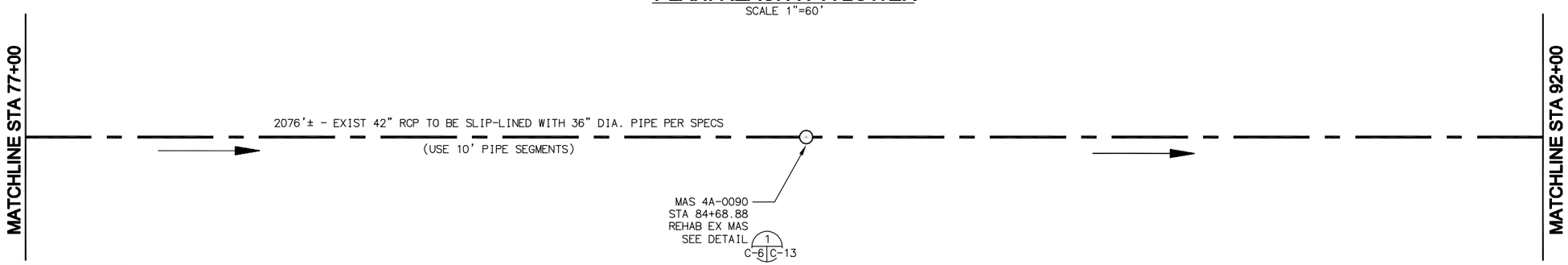

SCHEMATIC INSTALLATION DIAGRAM

NOT TO SCALE

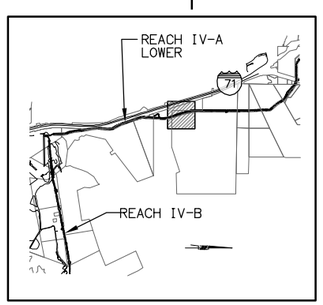

KEY MAP

NOT TO SCALE

LEGEND

SLIP-LINE DIRECTION

SCALE: 1"=60'

60 0 60 120 180

SCALE: 1"=60'

WARNING
0 1/2 1
IF THIS BAR DOES NOT MEASURE 1" THEN DRAWING IS NOT TO SCALE.

REGISTERED PROFESSIONAL ENGINEER
JOHN H. HARRIS
No. 38217
Exp. 3/31/11
CIVIL
STATE OF CALIFORNIA

REV	DATE	DESCRIPTION	APP
		RECORD DRAWINGS	

DESIGN BY:
DRAWN BY:
CHECKED BY:
DATE:

RBF CONSULTING
PLANNING ■ DESIGN ■ CONSTRUCTION
9755 CLAIREMONT MESA BLVD., SUITE 100
SAN DIEGO, CA 92124-1324
858.614.5000 • FAX 858.614.5001

SANTA ANA WATERSHED PROJECT AUTHORITY
11615 STERLING AVENUE • RIVERSIDE, CA 92503
(951) 354-4220 • www.sawpa.org

REPAIRS TO UNLINED RCP, REACH IV-A LOWER

REACH IV-A LOWER
STATION 77+00 TO STATION 92+00

DRAWING NO. C-6
SHEET 8 OF 19 SHEETS
FILE NO.

H:\PDATA\25103871\CADD\Water\Div\Reach_A\38711L-008.dwg 12/23/09 - 11:46am RBARTE

PLAN: REACH IV-A LOWER

SCALE 1"=60'

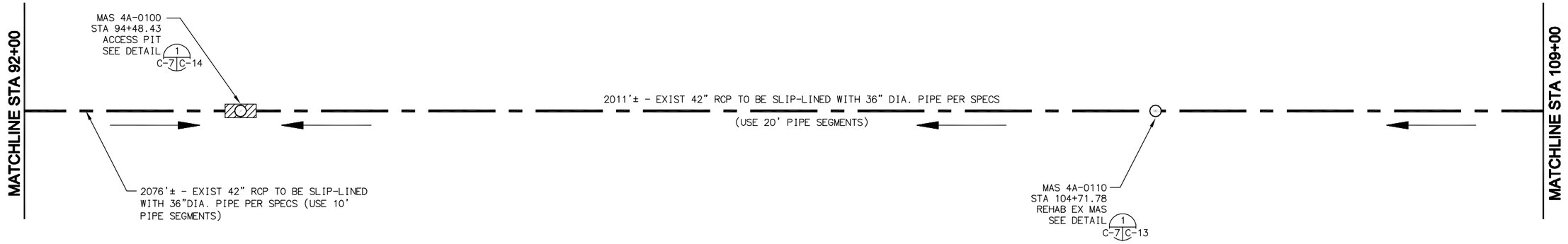

SCHEMATIC INSTALLATION DIAGRAM

NOT TO SCALE

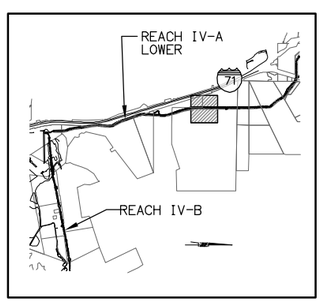

KEY MAP

NOT TO SCALE

LEGEND

SLIP-LINE DIRECTION

SCALE: 1"=60'

60 0 60 120 180

SCALE: 1"=60'

WARNING
0 1/2 1
IF THIS BAR DOES NOT MEASURE 1" THEN DRAWING IS NOT TO SCALE.

REGISTERED PROFESSIONAL ENGINEER JOHN H. ROBERTS No. 38217 Exp. 3/31/11 CIVIL STATE OF CALIFORNIA

REV	DATE	DESCRIPTION	APP
		RECORD DRAWINGS	

DESIGN BY:
DRAWN BY:
CHECKED BY:
DATE:

RBF CONSULTING
PLANNING ■ DESIGN ■ CONSTRUCTION
9755 CLAIREMONT MESA BLVD., SUITE 100
SAN DIEGO, CA 92124-1324
858.614.5000 • FAX 858.614.5001

SANTA ANA WATERSHED PROJECT AUTHORITY
11615 STERLING AVENUE • RIVERSIDE, CA 92503
(951) 354-4220 • www.sawpa.org

REPAIRS TO UNLINED RCP, REACH IV-A LOWER

REACH IV-A LOWER
STATION 92+00 TO STATION 109+00

DRAWING NO. C-7
SHEET: 9 OF 19 SHEETS
FILE NO.

H:\PDATA\2510387\CADD\Water\Div\Reach_A\3871L-009.dwg 12/23/09 - 11:46am RBARTE

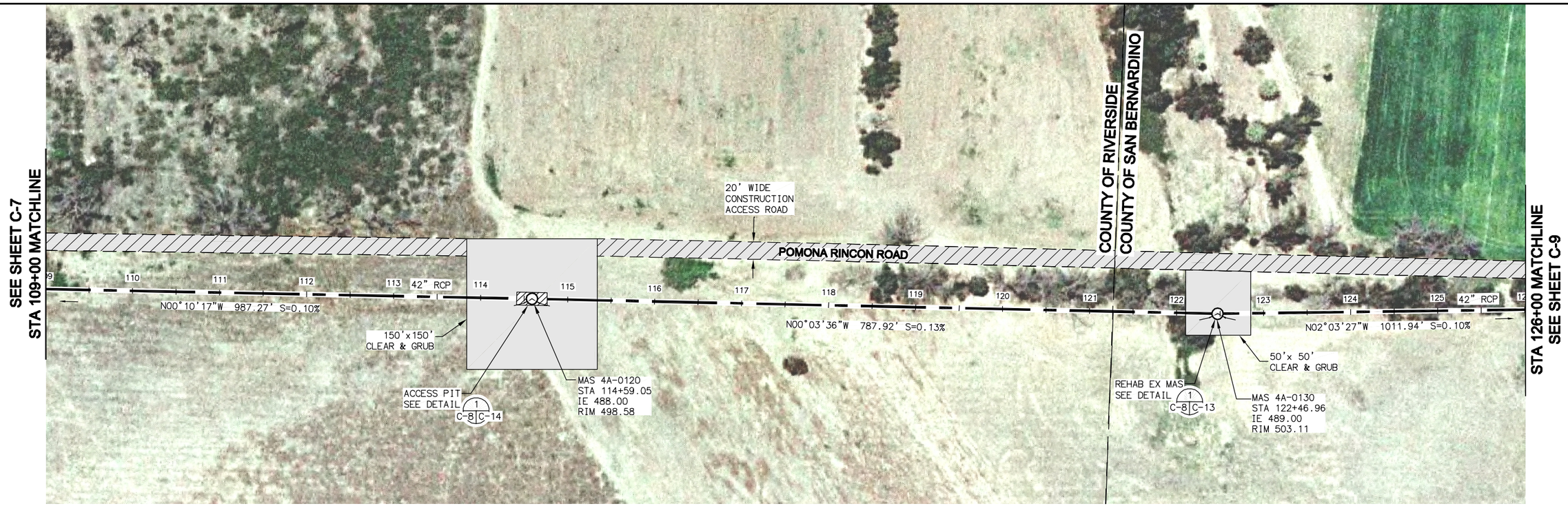

PLAN: REACH IV-A LOWER

SCALE 1"=60'

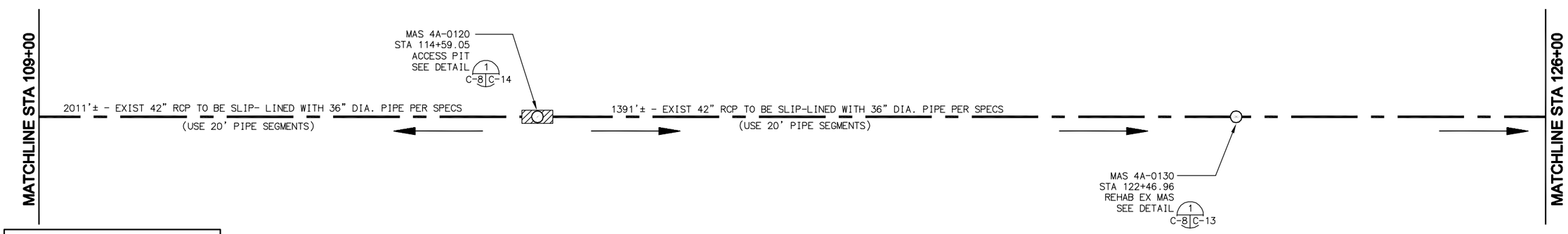

SCHEMATIC INSTALLATION DIAGRAM

NOT TO SCALE

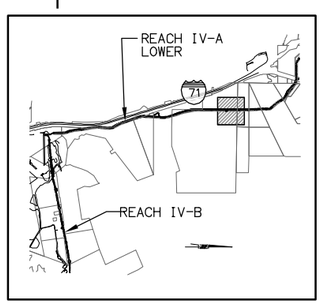

KEY MAP

NOT TO SCALE

LEGEND

SLIP-LINE DIRECTION

SCALE: 1"=60'

60 0 60 120 180

SCALE: 1"=60'

WARNING
0 1/2 1
IF THIS BAR DOES NOT MEASURE 1" THEN DRAWING IS NOT TO SCALE.

REGISTERED PROFESSIONAL ENGINEER JOHN H. HARRIS No. 38217 Exp. 3/31/11 CIVIL STATE OF CALIFORNIA

REV	DATE	DESCRIPTION	APP
		RECORD DRAWINGS	

DESIGN BY:
DRAWN BY:
CHECKED BY:
DATE:

RBF CONSULTING
PLANNING ■ DESIGN ■ CONSTRUCTION
9755 CLAIREMONT MESA BLVD., SUITE 100
SAN DIEGO, CA 92124-1324
858.614.5000 • FAX 858.614.5001

SANTA ANA WATERSHED PROJECT AUTHORITY
11615 STERLING AVENUE • RIVERSIDE, CA 92503
(951) 354-4220 • www.sawpa.org

REPAIRS TO UNLINED RCP, REACH IV-A LOWER

REACH IV-A LOWER
STATION 109+00 TO STATION 126+00

DRAWING NO. C-8
SHEET: 10 OF 19 SHEETS
FILE NO.

H:\PDATA\25103871\CADD\Water\Div\Reach_A\3871L-010.dwg 12/23/09 - 11:47am RBARTE

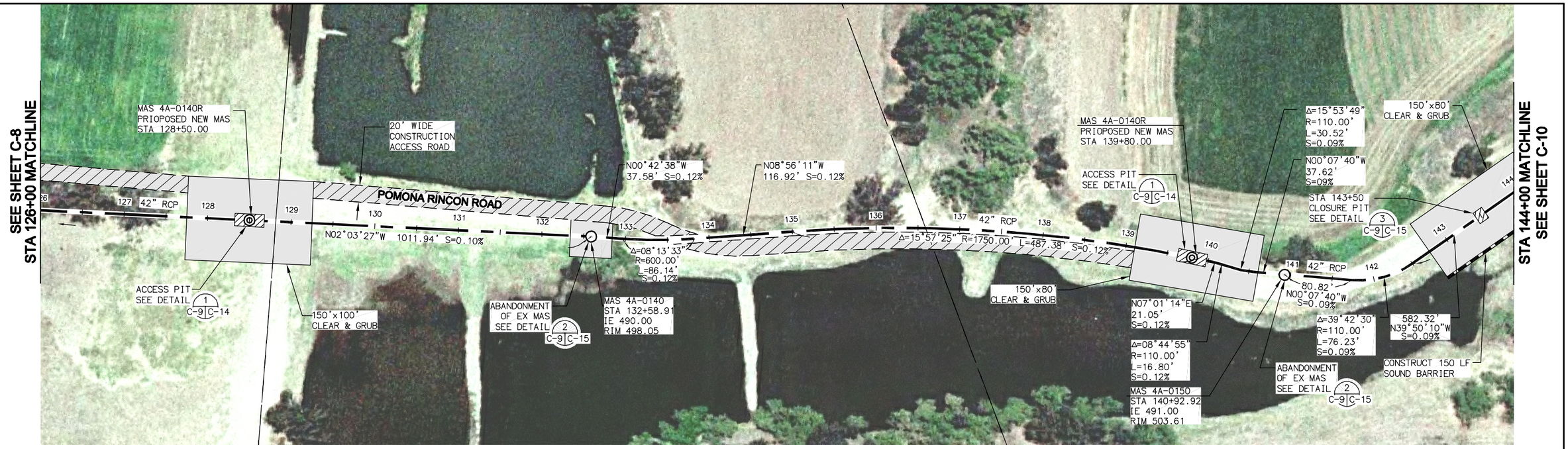

PLAN: REACH IV-A LOWER

SCALE 1"=60'

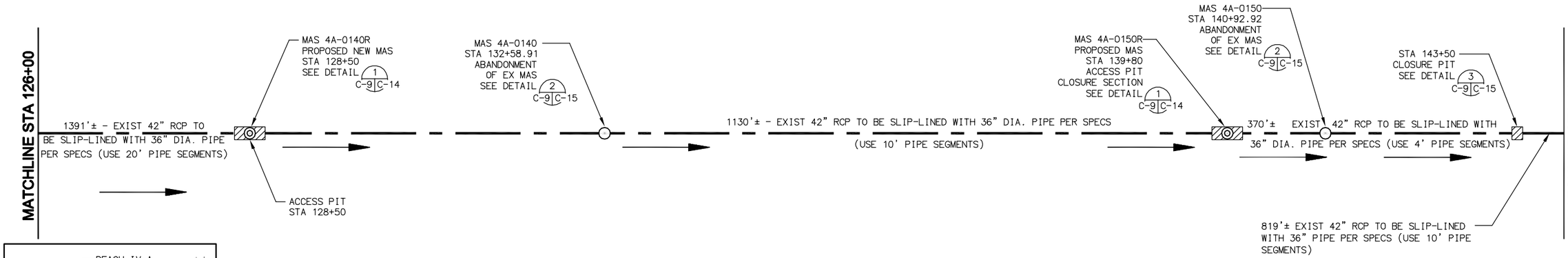

SCHEMATIC INSTALLATION DIAGRAM

NOT TO SCALE

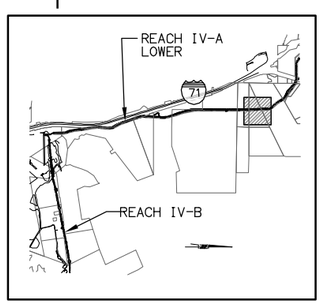

KEY MAP

NOT TO SCALE

LEGEND

SLIP-LINE DIRECTION

SCALE: 1"=60'

60 0 60 120 180

SCALE: 1"=60'

WARNING
0 1/2 1
IF THIS BAR DOES NOT MEASURE 1" THEN DRAWING IS NOT TO SCALE.

REGISTERED PROFESSIONAL ENGINEER
JOHN H. HARRIS
No. 38217
Exp. 3/31/11
CIVIL
STATE OF CALIFORNIA

REV	DATE	DESCRIPTION	APP
		RECORD DRAWINGS	

DESIGN BY:
DRAWN BY:
CHECKED BY:
DATE:

RBF CONSULTING
PLANNING ■ DESIGN ■ CONSTRUCTION
9755 CLAIREMONT MESA BLVD., SUITE 100
SAN DIEGO, CA 92124-1324
858.614.5000 • FAX 858.614.5001

SANTA ANA WATERSHED PROJECT AUTHORITY
11615 STERLING AVENUE • RIVERSIDE, CA 92503
(951) 354-4220 • www.sawpa.org

REPAIRS TO UNLINED RCP, REACH IV-A LOWER

REACH IV-A LOWER
STATION 126+00 TO STATION 144+00

DRAWING NO. C-9
SHEET: 11 OF 19 SHEETS
FILE NO.

H:\PDATA\25103871\CADD\Water\Div\Reach_A\38711_-011.dwg 12/23/09 - 11:55am RBARTE

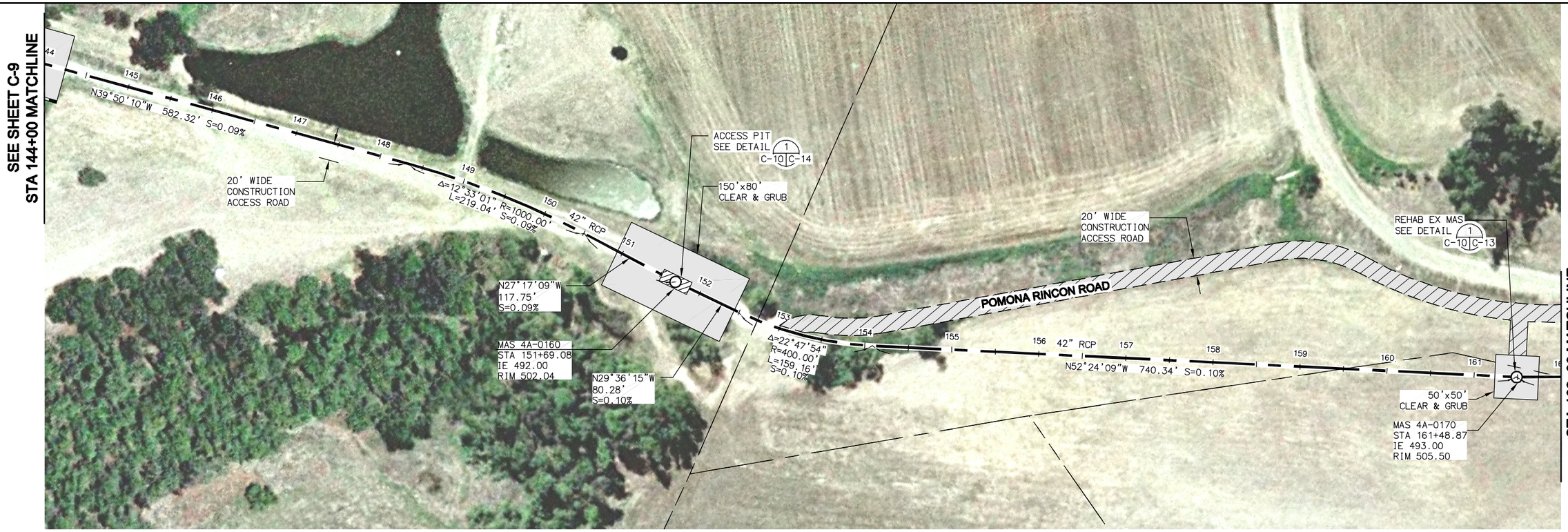

PLAN: REACH IV-A LOWER

SCALE 1"=60'

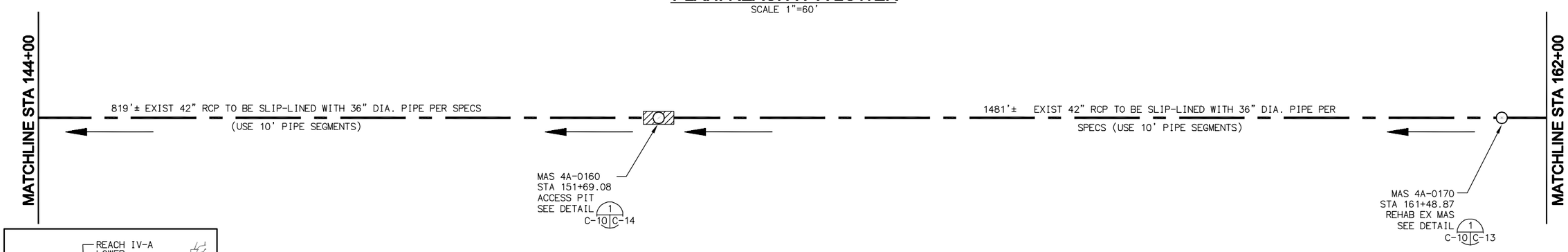

SCHEMATIC INSTALLATION DIAGRAM

NOT TO SCALE

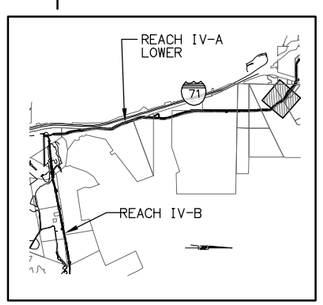

KEY MAP

NOT TO SCALE

LEGEND

SLIP-LINE DIRECTION

SCALE: 1"=60'

60 0 60 120 180

SCALE: 1"=60'

WARNING
0 1/2 1
IF THIS BAR DOES NOT MEASURE 1" THEN DRAWING IS NOT TO SCALE.

REGISTERED PROFESSIONAL ENGINEER
JOHN H. HARRIS
No. 38217
Exp. 3/31/11
CIVIL
STATE OF CALIFORNIA

REV	DATE	DESCRIPTION	APP
		RECORD DRAWINGS	

DESIGN BY:
DRAWN BY:
CHECKED BY:
DATE:

RBF CONSULTING
PLANNING ■ DESIGN ■ CONSTRUCTION
9755 CLAIREMONT MESA BLVD., SUITE 100
SAN DIEGO, CA 92124-1324
858.614.5000 • FAX 858.614.5001

SANTA ANA WATERSHED PROJECT AUTHORITY
11615 STERLING AVENUE • RIVERSIDE, CA 92503
(951) 354-4220 • www.sawpa.org

REPAIRS TO UNLINED RCP, REACH IV-A LOWER

REACH IV-A LOWER
STATION 144+00 TO STATION 162+00

DRAWING NO. C-10
SHEET 12 OF 19 SHEETS
FILE NO.

H:\PDATA\25103871\CADD\Water\Div\Reach_A\38711L-012.dwg 01/04/10 - 2:58pm RBARTE

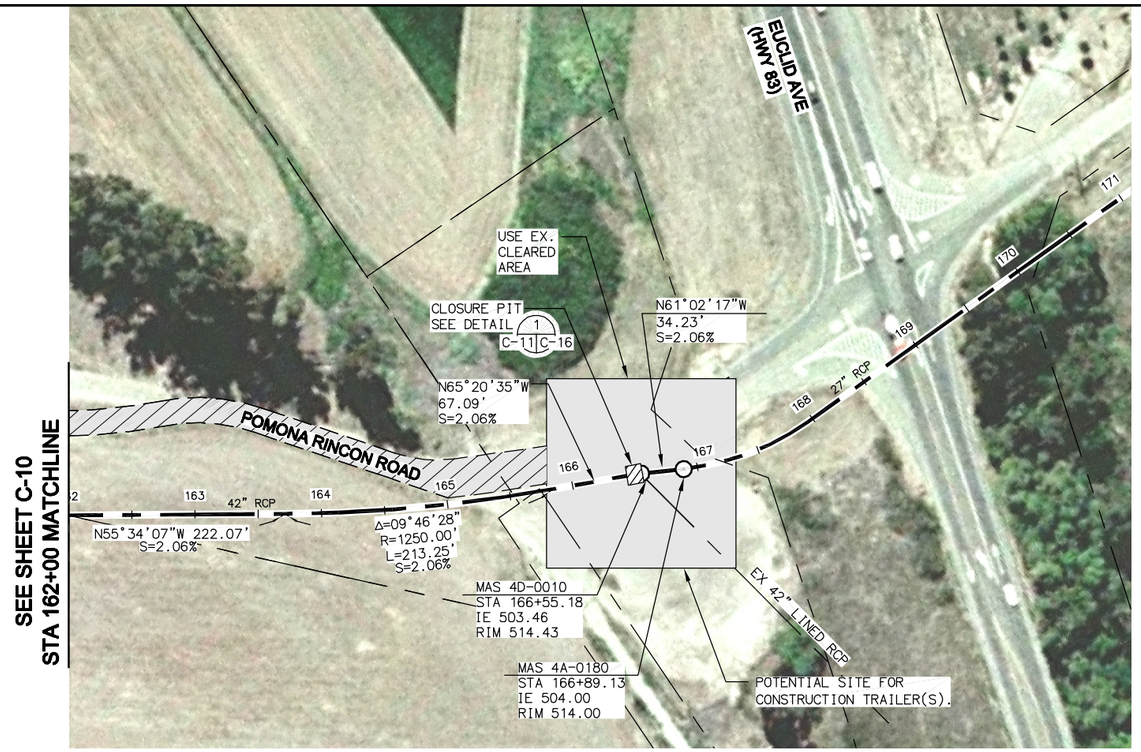

PLAN: REACH IV-A LOWER

SCALE 1"=60'

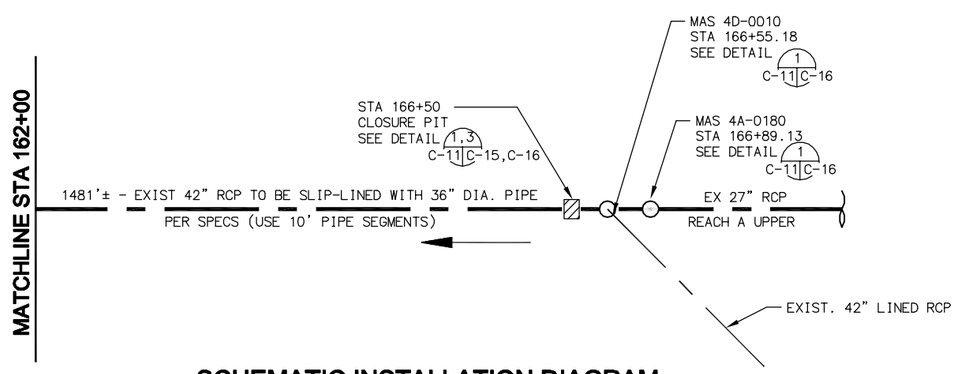

SCHEMATIC INSTALLATION DIAGRAM

NOT TO SCALE

LEGEND

SLIP-LINE DIRECTION

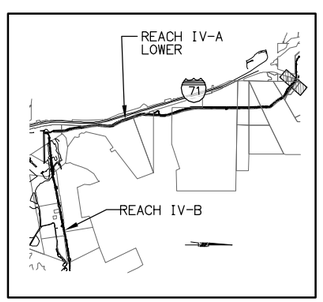

KEY MAP

NOT TO SCALE

SCALE: 1"=60'

60 0 60 120 180

SCALE: 1"=60'

WARNING
0 1/2 1
IF THIS BAR DOES NOT MEASURE 1" THEN DRAWING IS NOT TO SCALE.

REGISTERED PROFESSIONAL ENGINEER
JOHN H. HARRIS
No. 38217
Exp. 3/31/11
CIVIL
STATE OF CALIFORNIA

REV	DATE	DESCRIPTION	APP
		RECORD DRAWINGS	

DESIGN BY:
DRAWN BY:
CHECKED BY:
DATE:

RBF CONSULTING
PLANNING ■ DESIGN ■ CONSTRUCTION
9755 CLAIREMONT MESA BLVD., SUITE 100
SAN DIEGO, CA 92124-1324
858.614.5000 • FAX 858.614.5001

SANTA ANA WATERSHED PROJECT AUTHORITY
11615 STERLING AVENUE • RIVERSIDE, CA 92503
(951) 354-4220 • www.sawpa.org

REPAIRS TO UNLINED RCP, REACH IV-A LOWER

REACH IV-A LOWER
STATION 162+00 TO STATION 166+89 - END PROJECT

DRAWING NO. C-11
SHEET 13 OF 19 SHEETS
FILE NO.

H:\PDATA\25103871\CADD\Water\Div\Reach_A\3871L-013.dwg 01/04/10 - 2:59pm RBARTE

NOTE: REFERENCE DRAWING ONLY

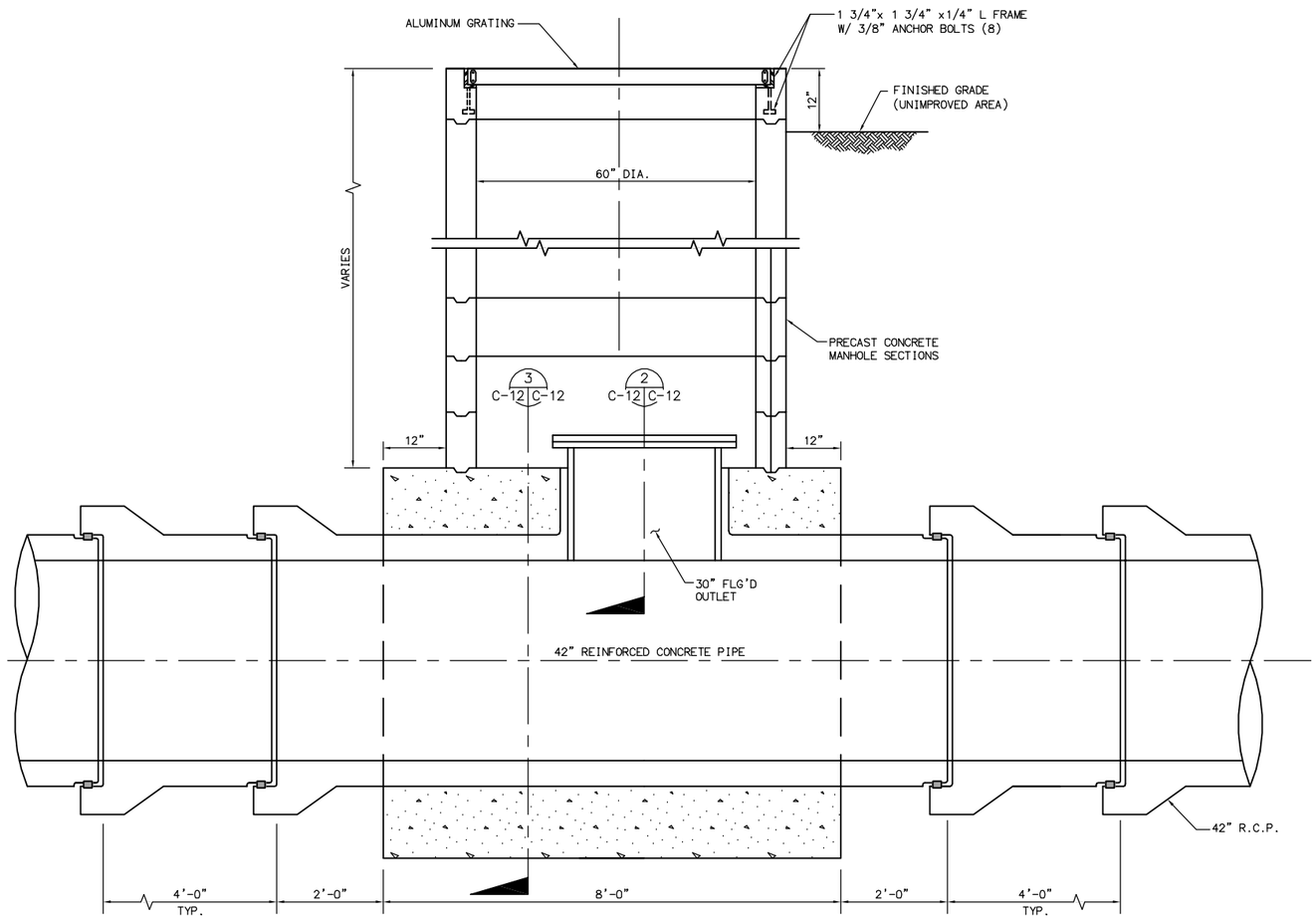

1 C-12 C-12 **SECTION** NTS

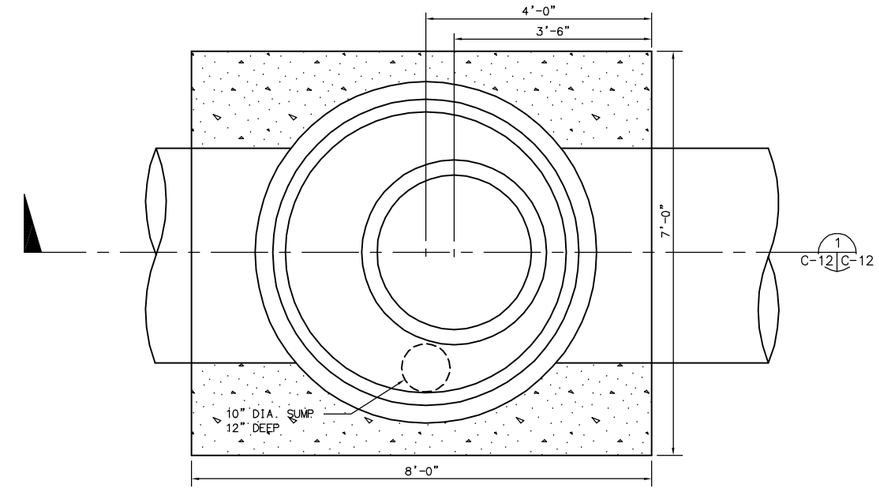

PLAN NTS

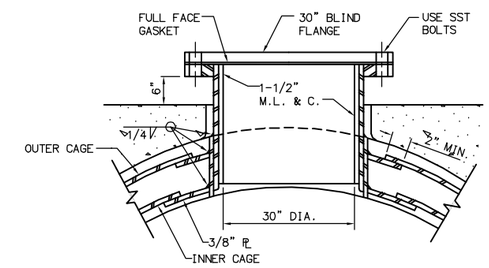

2 C-12 C-12 **MAS SECTION** NTS

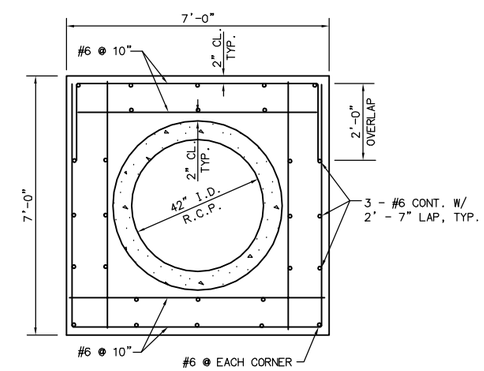

3 C-12 C-12 **MAS SECTION** NTS

REV	DATE	DESCRIPTION	APP
		RECORD DRAWINGS	

DESIGN BY:
DRAWN BY:
CHECKED BY:
DATE:

RBF CONSULTING
PLANNING ■ DESIGN ■ CONSTRUCTION
9755 CLAIREMONT MESA BLVD., SUITE 100
SAN DIEGO, CA 92124-1324
858.614.5000 • FAX 858.614.5001

SANTA ANA WATERSHED PROJECT AUTHORITY
11615 STERLING AVENUE • RIVERSIDE, CA 92503
(951) 354-4220 • www.sawpa.org

REPAIRS TO UNLINED RCP, REACH IV-A LOWER

EXISTING MAS

DRAWING NO. C-12
SHEET 14 OF 19 SHEETS
FILE NO.

H:\PDATA\25103871\CADD\Water\Div\Reach_A\3871L-014.dwg 12/23/09 - 11:57am RBARTE

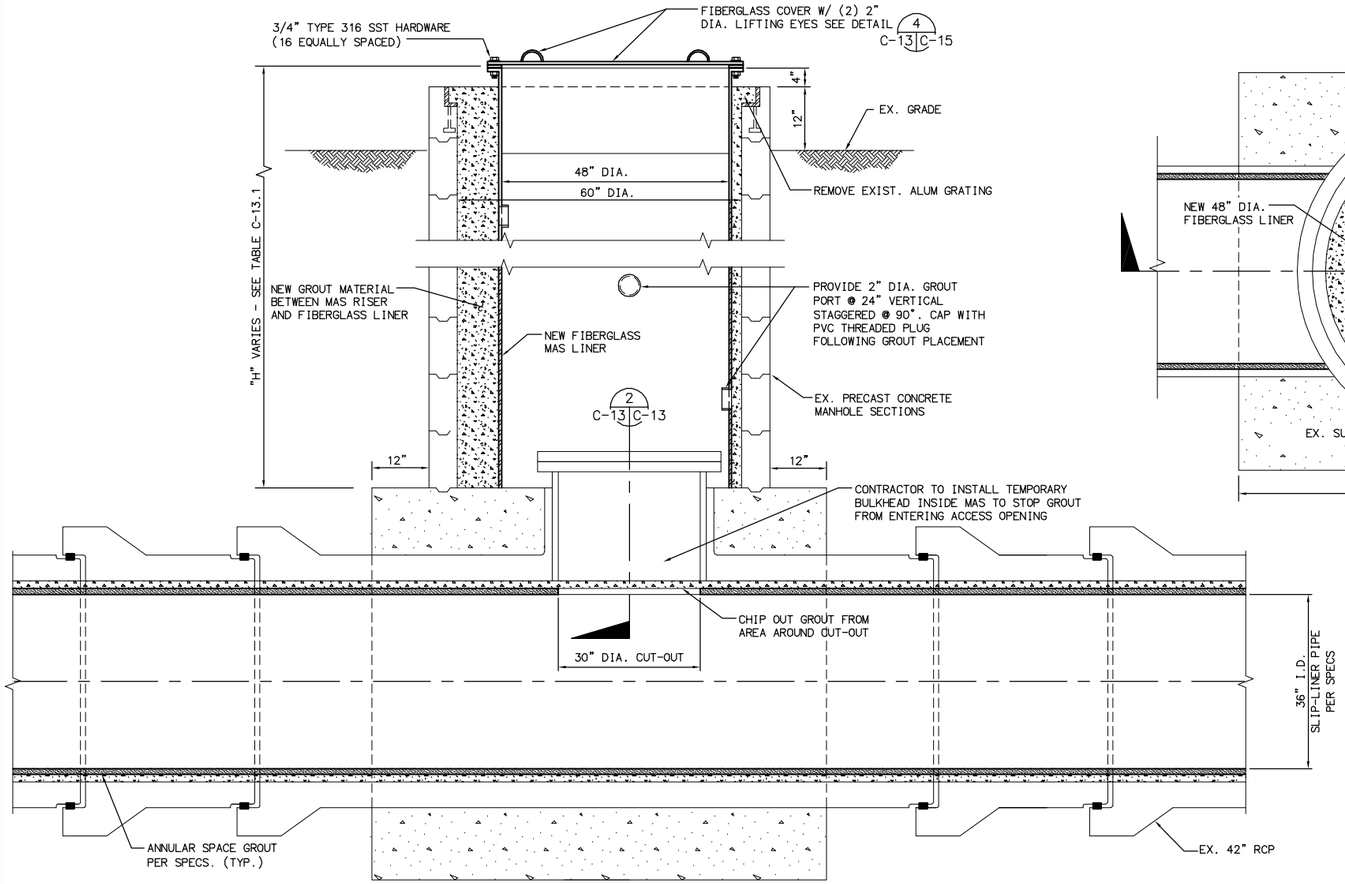

SECTION

1 REHAB EXISTING MAS

C-1 THRU C-11 C-13 NTS

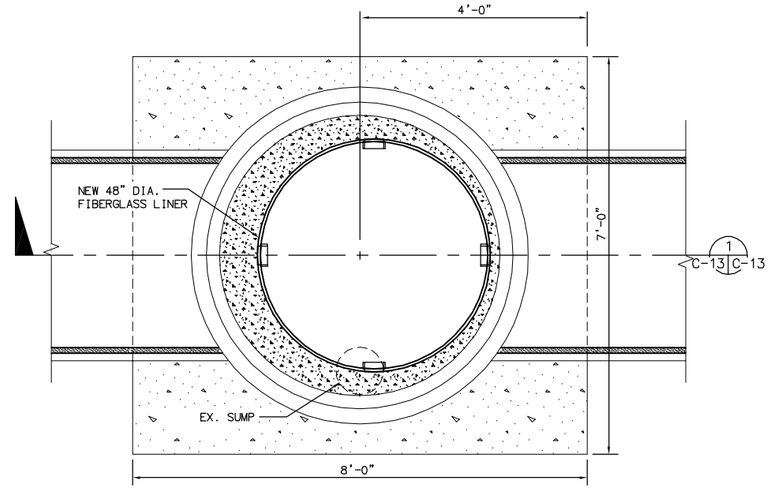

PLAN

NTS

TABLE C-13.1		
MAS NO.	DEPTH TO INVERT (FT)	LINER * "H" (FT)
4A-0010	15	11.25
4A-0020	11	7.25
4A-0040	9.5	5.75
4A-0060	16,5	12.75
4A-0090	12	8.25
4A-0110	18	14.25
4A-0130	15	11.25
4A-0170	12	8.25
4A-0180	10	6.25

* CONTRACTOR TO FIELD VERIFY
DIMENSIONS AND INCLUDE UPDATED TABLE
AS PART OF THE SHOP DRAWING SUBMITTAL

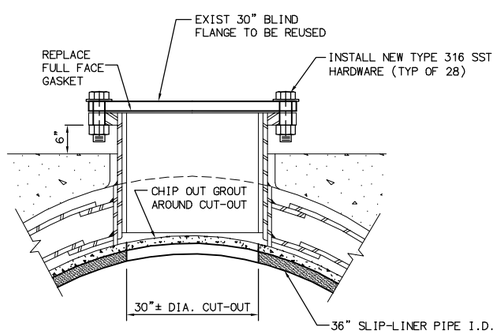

2 SECTION

C-13 C-13 NTS

REV	DATE	DESCRIPTION	APP
		RECORD DRAWINGS	

DESIGN BY:
DRAWN BY:
CHECKED BY:
DATE:

RBF CONSULTING
PLANNING ■ DESIGN ■ CONSTRUCTION
9755 CLAIREMONT MESA BLVD., SUITE 100
SAN DIEGO, CA 92124-1324
858.614.5000 • FAX 858.614.5001

SANTA ANA WATERSHED PROJECT AUTHORITY
11615 STERLING AVENUE • RIVERSIDE, CA 92503
(951) 354-4220 • www.sawpa.org

REPAIRS TO UNLINED RCP, REACH IV-A LOWER

REHAB EXISTING MAS

DRAWING NO. C-13
SHEET: 15 OF 19 SHEETS
FILE NO.

H:\PDATA\25103871\CADD\Water\Div\Reach_A\3871L-015.dwg 01/04/10 - 3:01pm RBARTE

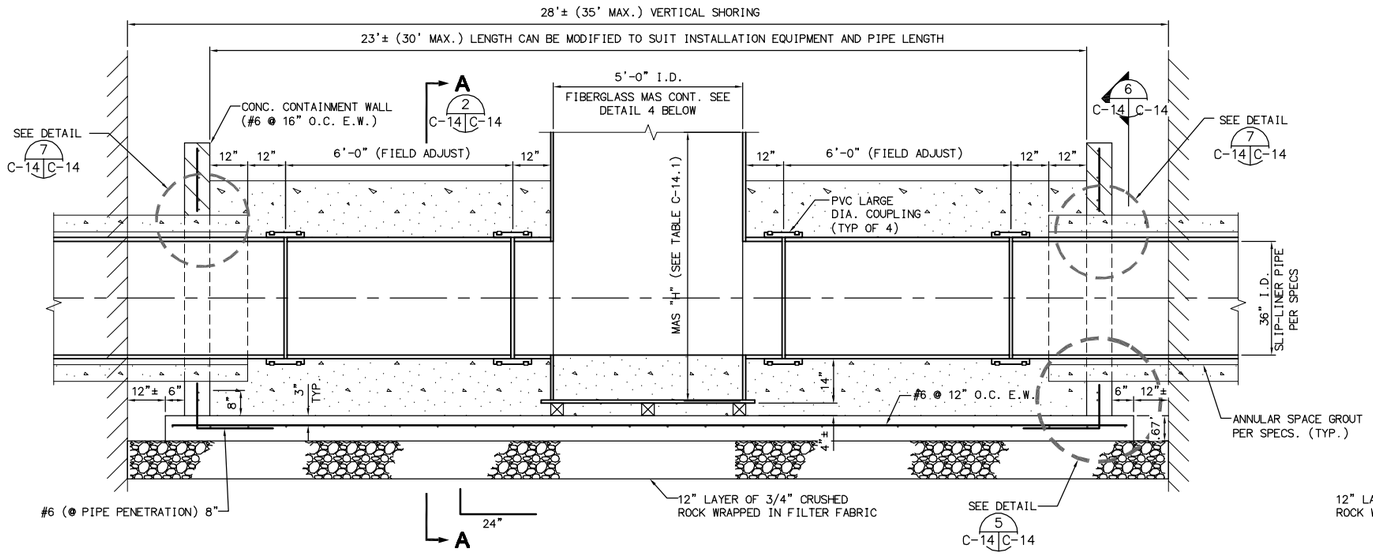

CONTAINMENT BASIN SECTION

1 VARIES C-14 — NTS

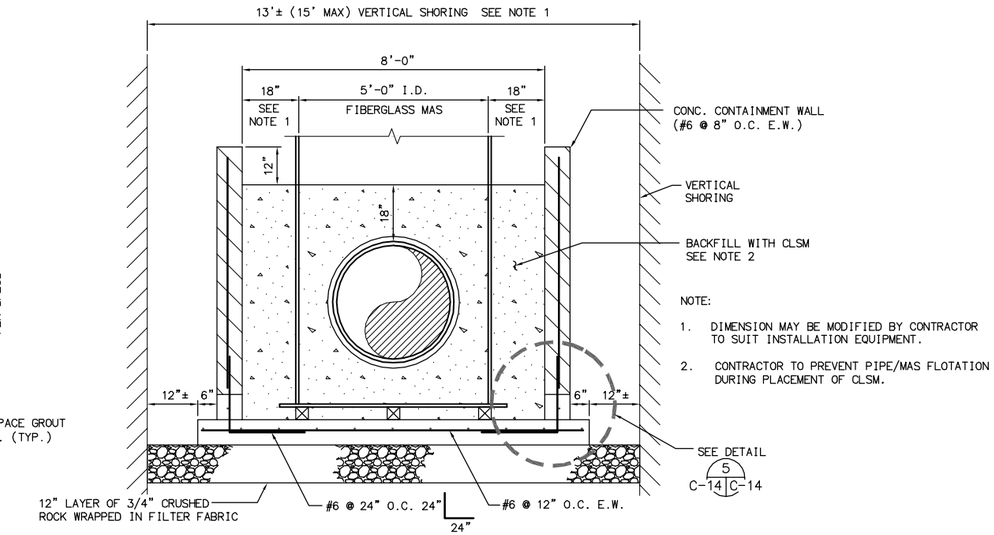

NOTE:

1. DIMENSION MAY BE MODIFIED BY CONTRACTOR TO SUIT INSTALLATION EQUIPMENT.
2. CONTRACTOR TO PREVENT PIPE/MAS FLOTATION DURING PLACEMENT OF CLSM.

CONTAINMENT BASIN SECTION

2 C-14, C-15 C-14 — NTS

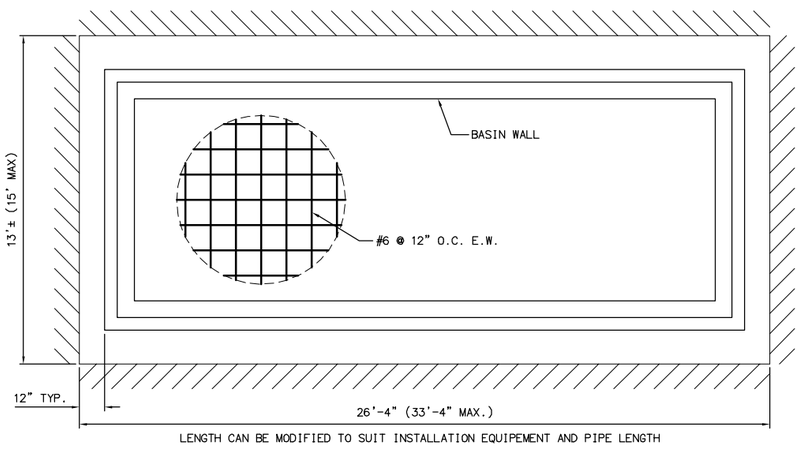

CONTAINMENT BASIN FOUNDATION PLAN

3 C-14 C-14 — NTS

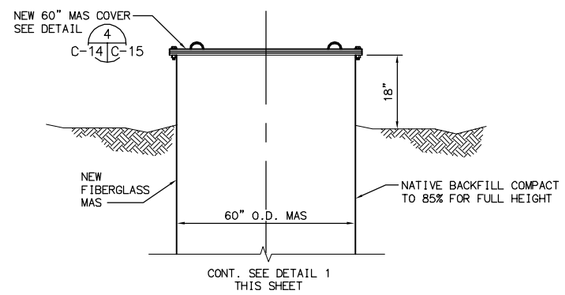

MAS SECTION AT GRADE

4 C-14 C-14 — NTS

TABLE C-14.1		
MAS NO.	DEPTH TO INVERT (FT)	LINER * "H" (FT)
4A-0030	9.5	11
4A-0050	18	19
4A-0070	14	15
4A-0080	10	11
4A-0100	12.5	14
4A-0120	12	13
4A-0140R	13	14
4A-0150R	13	14
4A-0160	13	14

* CONTRACTOR TO FIELD VERIFY DEPTH TO INVERT DIMENSIONS AT EXISTING MAS AND ADJUST "H" AS REQUIRED TO HAVE TOP OF COVER AT 18" ABOVE FINISH GRADE. UPDATE THIS TABLE AS PART OF THE SHOP DRAWING SUBMITTAL.

FOR MAS 4A-0140R AND 4A-0150R, CONFIRM THE DEPTH TO INVERT DIMENSIONS BY POTHOLING THE EXISTING PIPE IN ADVANCE OF SLIP-LINING

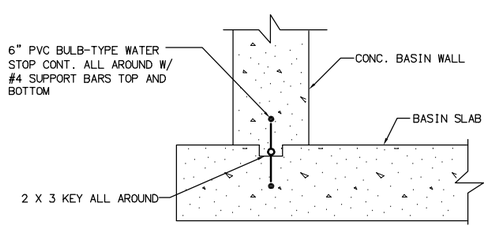

TYP. WATER STOP DETAIL

5 C-14 C-14 — NTS

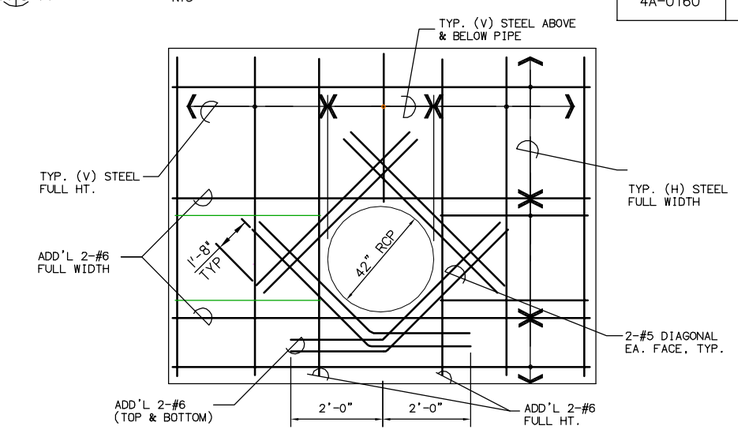

TYPICAL WALL REINF. AROUND PIPE

6 C-14 C-14 — NTS

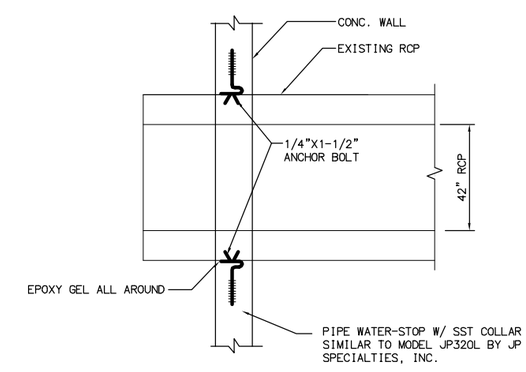

TYP. PIPE PENETRATION DETAIL

7 C-14 C-14 — NTS

REGISTERED PROFESSIONAL ENGINEER JOHN H. MORRISSEY No. 38217 Exp. 3/31/11 CIVIL STATE OF CALIFORNIA

REV	DATE	DESCRIPTION	APP
		RECORD DRAWINGS	

DESIGN BY: DRAWN BY: CHECKED BY: DATE:

RBF CONSULTING — PLANNING ■ DESIGN ■ CONSTRUCTION
9755 CLAIREMONT MESA BLVD., SUITE 100
SAN DIEGO, CA 92124-1324
858.614.5000 • FAX 858.614.5001

SANTA ANA WATERSHED PROJECT AUTHORITY
11615 STERLING AVENUE • RIVERSIDE, CA 92503
(951) 354-4220 • www.sawpa.org

REPAIRS TO UNLINED RCP, REACH IV-A LOWER

GENERAL DETAILS

DRAWING NO. C-14 — SHEET 16 OF 19 SHEETS — FILE NO.

t:\PDATA\25103871\CADD\Water\Div\Reach_A\3871L-016.dwg 01/04/10 - 3:01pm RBARTE

SEQUENCE OF WORK

1. COMPLETE SLIP-LINER PIPE SECTION TO THE LIMIT SHOWN.
2. INSTALL TEMPORARY FLOW-THRU PLUG & HOSE INSIDE SLIP-LINER PIPE.
3. INSTALL BULKHEAD TO PERFORM ANNULAR SPACE GROUTING.
4. REMOVE BULKHEAD AND PLUG AND RECONFIGURE THE MAS. PER DETAIL

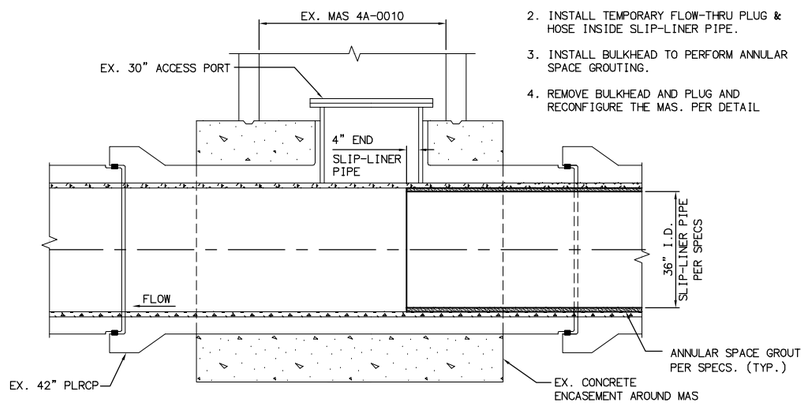

1 C-1|C-15 **CONNECTION DETAIL - MAS 4A-0010**

NTS

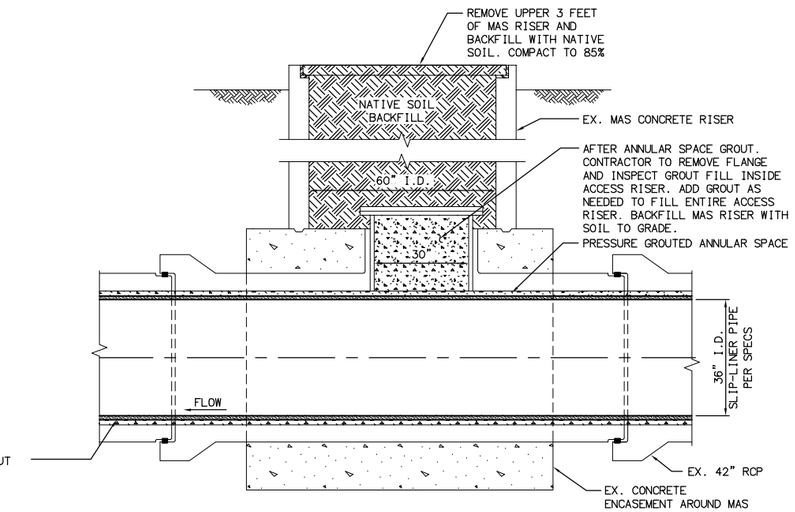

2 C-9|C-15 **ABANDONMENT OF EX. MAS**

NTS

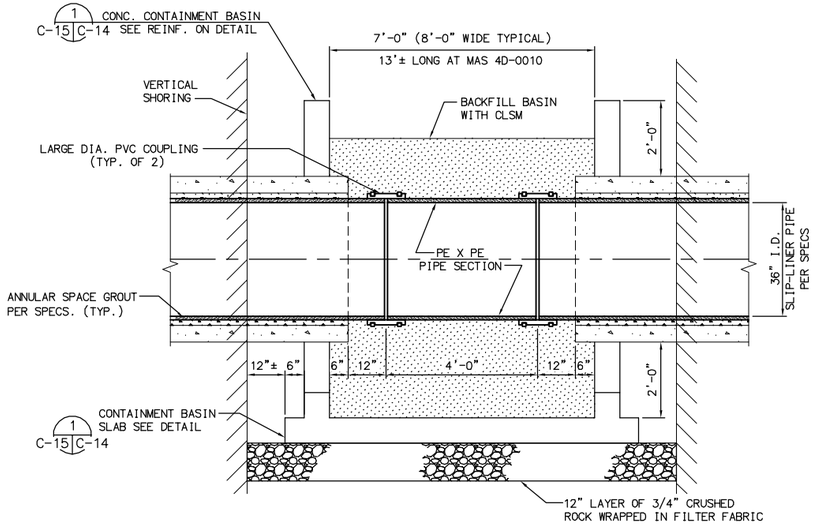

3 C-11,C-16|C-15 **CLOSURE PIT DETAIL**

NTS

SEQUENCE OF WORK

1. CONSTRUCT CONTAINMENT BASIN AROUND EXIT PIPE.
2. CUT OUT PIPE WHERE SHOWN WITH WIRE SAW.
3. COMPLETE SLIP-LINER PIPE INSERTION TO THE LIMITS SHOWN.
4. INSTALL TEMPORARY FLOW-THRU PLUG AND HOSE TO SPAN SLIP-LINER PIPE SECTIONS.
5. INSTALL BULKHEAD TO PERFORM ANNULAR SPACE GROUTING ON EACH END.
6. REMOVE BULKHEAD AND PLUG AND INSERT RECONNECTING PIPE SECTION.
7. PUMP OUT BASIN AND BACKFILL WITH CLSM.

NOTES:

1. PROVIDE WATERSTOP AT BASE OF WALL PER DETAIL 5, SHEET C-14
2. PROVIDE ADD'L REINFORCING AT EACH PIPE PENETRATION THROUGH WALL PER DETAIL 6, SHEET C-14.
3. PROVIDE PIPE PENETRATION WATERSTOP (TYP. OF 2) PER DETAIL 7, SHEET C-14.
4. CONTRACTOR TO PREVENT PIPE FLOTATION DURING PLACEMENT OF CLSM.

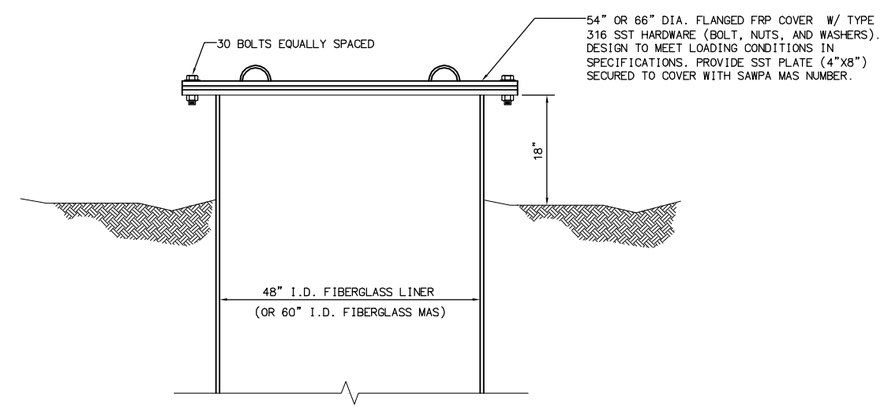

4 C-13,C-14|C-15 **MAS COVER DETAIL**

NTS

REV	DATE	DESCRIPTION	APP
		RECORD DRAWINGS	

DESIGN BY:
DRAWN BY:
CHECKED BY:
DATE:

RBF CONSULTING — PLANNING ■ DESIGN ■ CONSTRUCTION
9755 CLAIREMONT MESA BLVD., SUITE 100
SAN DIEGO, CA 92124-1324
858.614.5000 • FAX 858.614.5001

SANTA ANA WATERSHED PROJECT AUTHORITY
11615 STERLING AVENUE • RIVERSIDE, CA 92503
(951) 354-4220 • www.sawpa.org

REPAIRS TO UNLINED RCP, REACH IV-A LOWER

ACCESS PIT DETAILS

DRAWING NO. C-15
SHEET 17 OF 19 SHEETS
FILE NO.

H:\PDATA\25103871\CADD\Water\Div\Reach_A\3871L-017.dwg 01/04/10 - 3:02pm RBARTE

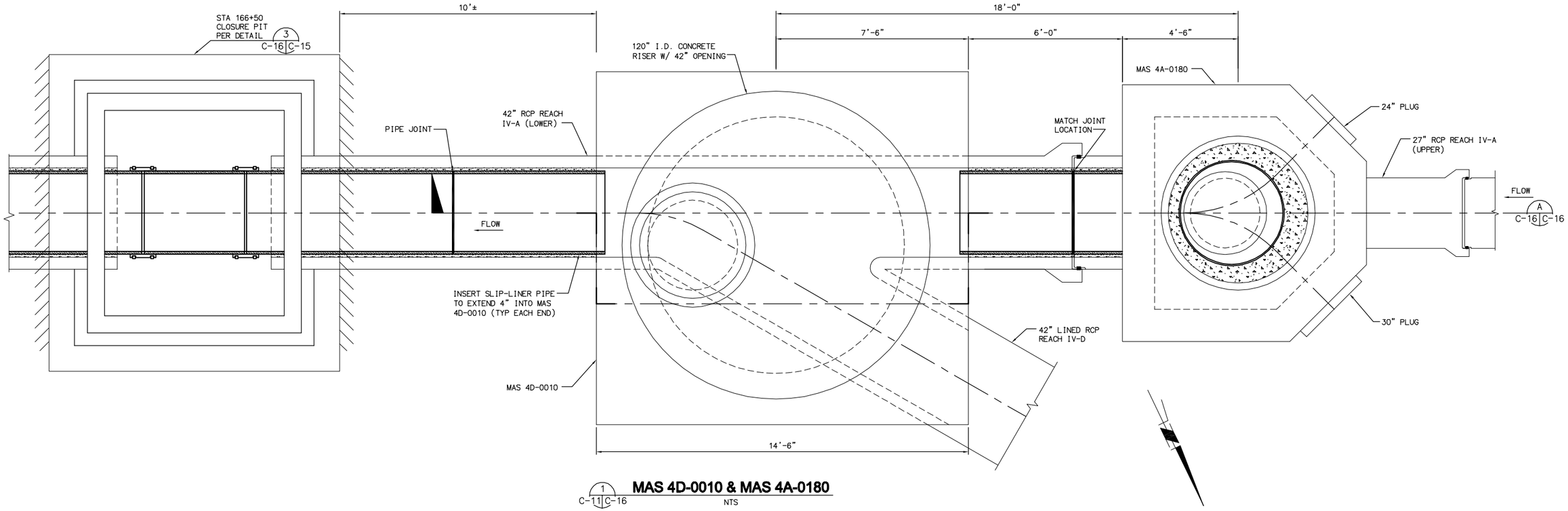

1 C-11 C-16 **MAS 4D-0010 & MAS 4A-0180**

NTS

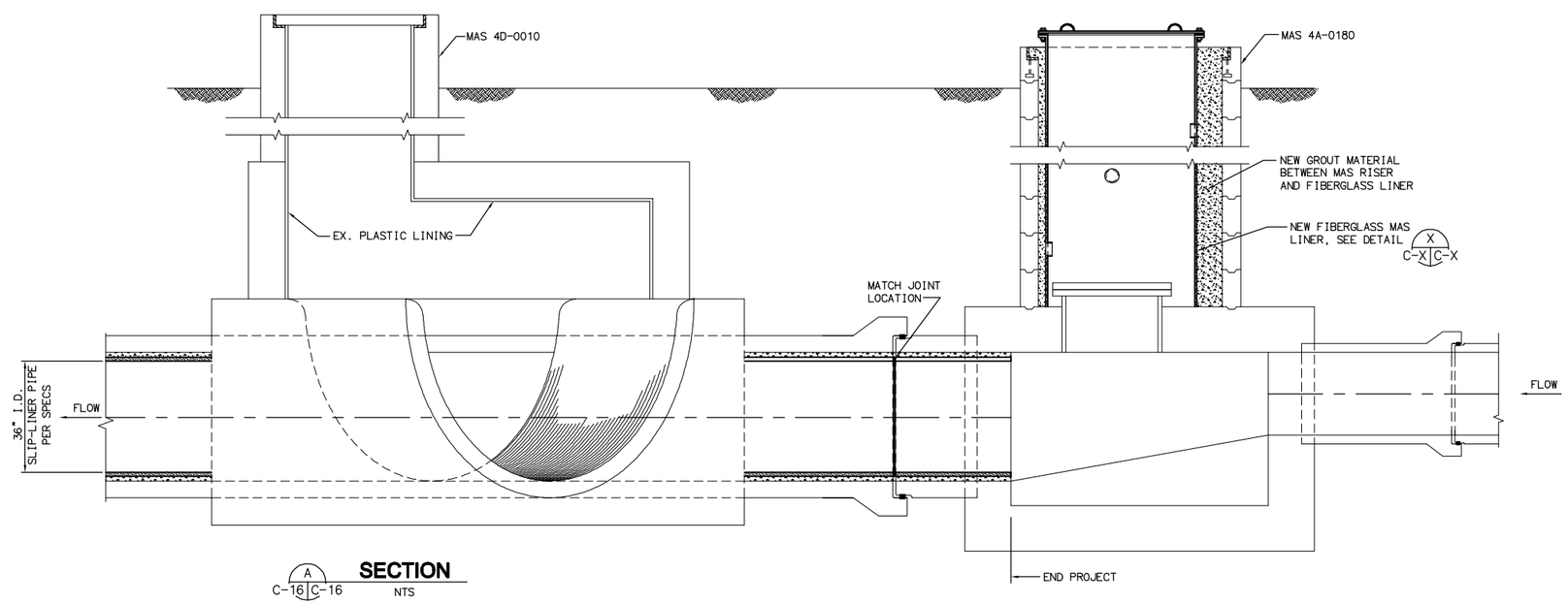

A C-16 C-16 **SECTION**

NTS

REV	DATE	DESCRIPTION	APP
		RECORD DRAWINGS	

DESIGN BY:
DRAWN BY:
CHECKED BY:
DATE:

REGISTERED PROFESSIONAL ENGINEER JOHN H. HARRIS No. 38217 Exp. 3/31/11 CIVIL STATE OF CALIFORNIA

RBF CONSULTING
PLANNING ■ DESIGN ■ CONSTRUCTION
9755 CLAIREMONT MESA BLVD., SUITE 100
SAN DIEGO, CA 92124-1324
858.614.5000 • FAX 858.614.5001

SANTA ANA WATERSHED PROJECT AUTHORITY
11615 STERLING AVENUE • RIVERSIDE, CA 92503
(951) 354-4220 • www.sawpa.org

REPAIRS TO UNLINED RCP, REACH IV-A LOWER

MAS 4D-0010 AND MAS 4A-0180

DRAWING NO. C-16
SHEET: 18 OF 19 SHEETS
FILE NO.

H:\PDATA\25103871\CADD\Water\Div\Reach_A\3871L-018.dwg 01/04/10 - 3:02pm RBARTE

DATE DRILLED 10/13/09 BORING NO. B-1
GROUND ELEVATION Existing Grade SHEET 1 OF 2
METHOD OF DRILLING 6" Diameter Hollow Stem Auger (CME-75)(Baja)
DRIVE WEIGHT 140 lbs. (Auto-Trip) DROP 30"
SAMPLED BY BTM LOGGED BY BTM REVIEWED BY RI

DEPTH (feet)	SAMPLES (Bulk / Driven)	BLOWS/FOOT	MOISTURE (%)	DRY DENSITY (PCF)	SYMBOL	CLASSIFICATION U.S.C.S.	DESCRIPTION/INTERPRETATION
0						SM	ALLUVIUM: Grayish brown, damp, medium dense, silty fine SAND.
5		26	10.3	117.3			Moist to wet.
			▽				Saturated; very loose.
10		Push	14.0	119.0			
15		3					Fine to coarse sand; scattered gravel.
20							

Ninyo & Moore

BORING LOG
REACH IV-A

PROJECT NO.	DATE	FIGURE
106480002	11/09	A-1

DATE DRILLED 10/13/09 BORING NO. B-1
GROUND ELEVATION Existing Grade SHEET 2 OF 2
METHOD OF DRILLING 6" Diameter Hollow Stem Auger (CME-75)(Baja)
DRIVE WEIGHT 140 lbs. (Auto-Trip) DROP 30"
SAMPLED BY BTM LOGGED BY BTM REVIEWED BY RI

DEPTH (feet)	SAMPLES (Bulk / Driven)	BLOWS/FOOT	MOISTURE (%)	DRY DENSITY (PCF)	SYMBOL	CLASSIFICATION U.S.C.S.	DESCRIPTION/INTERPRETATION
20		11				SP	ALLUVIUM: (Continued) Grayish brown, saturated, medium dense, poorly graded SAND.
							Total Depth = 21.5 feet. Groundwater encountered at approximately 9 feet during drilling. Backfilled shortly after drilling on 10/13/09.
25							Note: Groundwater may rise to a level higher than that measured in borehole due to seasonal variations in precipitation and several other factors as discussed in the report.
30							
35							
40							

Ninyo & Moore

BORING LOG
REACH IV-A

PROJECT NO.	DATE	FIGURE
106480002	11/09	A-2

DATE DRILLED 10/13/09 BORING NO. B-2
GROUND ELEVATION Existing Grade SHEET 1 OF 2
METHOD OF DRILLING 6" Diameter Hollow Stem Auger (CME-75)(Baja)
DRIVE WEIGHT 140 lbs. (Auto-Trip) DROP 30"
SAMPLED BY BTM LOGGED BY BTM REVIEWED BY RI

DEPTH (feet)	SAMPLES (Bulk / Driven)	BLOWS/FOOT	MOISTURE (%)	DRY DENSITY (PCF)	SYMBOL	CLASSIFICATION U.S.C.S.	DESCRIPTION/INTERPRETATION
0						SM	ALLUVIUM: Brown, damp, medium dense, silty fine SAND.
5		17	8.2	101.0			
10		15	7.3	97.7			Scattered gravel.
15		6					Damp to moist; loose.
20			▽				

Ninyo & Moore

BORING LOG
REACH IV-A

PROJECT NO.	DATE	FIGURE
106480002	11/09	A-3

DATE DRILLED 10/13/09 BORING NO. B-2
GROUND ELEVATION Existing Grade SHEET 2 OF 2
METHOD OF DRILLING 6" Diameter Hollow Stem Auger (CME-75)(Baja)
DRIVE WEIGHT 140 lbs. (Auto-Trip) DROP 30"
SAMPLED BY BTM LOGGED BY BTM REVIEWED BY RI

DEPTH (feet)	SAMPLES (Bulk / Driven)	BLOWS/FOOT	MOISTURE (%)	DRY DENSITY (PCF)	SYMBOL	CLASSIFICATION U.S.C.S.	DESCRIPTION/INTERPRETATION
20		6				SM	ALLUVIUM: (Continued) Brown, saturated, loose, silty fine SAND; scattered gravel.
							Total Depth = 21.5 feet. Groundwater encountered at approximately 20 feet during drilling. Backfilled shortly after drilling on 10/13/09.
25							Note: Groundwater may rise to a level higher than that measured in borehole due to seasonal variations in precipitation and several other factors as discussed in the report.
30							
35							
40							

Ninyo & Moore

BORING LOG
REACH IV-A

PROJECT NO.	DATE	FIGURE
106480002	11/09	A-4

NOTES:

1. SOIL BORINGS WERE PERFORMED IN OCTOBER 2009 AND REFLECT SOIL AND GROUNDWATER CONDITIONS AT THAT TIME. IT IS ESTIMATED THAT GROUNDWATER LEVELS SHOWN ARE AT OR NEAR THEIR LOWEST ANNUAL LEVEL AND CAN BE EXPECTED TO BE HIGHER DURING CONSTRUCTION.
2. THE PROJECT AREA IS INDICATED WITH A FLOOD CONTAINMENT BASIN AND CAN BE INUNDATED EVEN WITH MINOR AMOUNTS OF RAINFALL IN THE WATERSHED.
3. THE CONTRACTOR SHALL MAKE PROVISIONS TO PERFORM RE-WATERING AS REQUIRED IN THE SPECIFICATIONS, REGARDLESS OF THE GROUNDWATER LEVEL. NO ADJUSTMENT IN CONTRACT PRICE SHALL BE PROVIDED FOR GROUNDWATER LEVELS THAT ARE DIFFERENT THAN SHOWN HEREON.

REGISTERED PROFESSIONAL ENGINEER JOHN H. HARRIS No. 38217 Exp. 3/31/11 CIVIL STATE OF CALIFORNIA

REV	DATE	DESCRIPTION	APP
		RECORD DRAWINGS	

DESIGN BY:
DRAWN BY:
CHECKED BY:
DATE:

RBF CONSULTING
PLANNING ■ DESIGN ■ CONSTRUCTION
9755 CLAIREMONT MESA BLVD., SUITE 100
SAN DIEGO, CA 92124-1324
858.614.5000 • FAX 858.614.5001

SANTA ANA WATERSHED PROJECT AUTHORITY
11615 STERLING AVENUE • RIVERSIDE, CA 92503
(951) 354-4220 • www.sawpa.org

REPAIRS TO UNLINED RCP, REACH IV-A LOWER

SOIL BORING LOGS

DRAWING NO. C-17
SHEET 19 OF 19 SHEETS
FILE NO.

WARNING
0 1/2 1
IF THIS BAR DOES NOT MEASURE 1" THEN DRAWING IS NOT TO SCALE.

H:\PDATA\25103871\CADD\Water\Div\Reach_A\38711_-019.dwg 12/23/09 - 12:04pm RBARTE