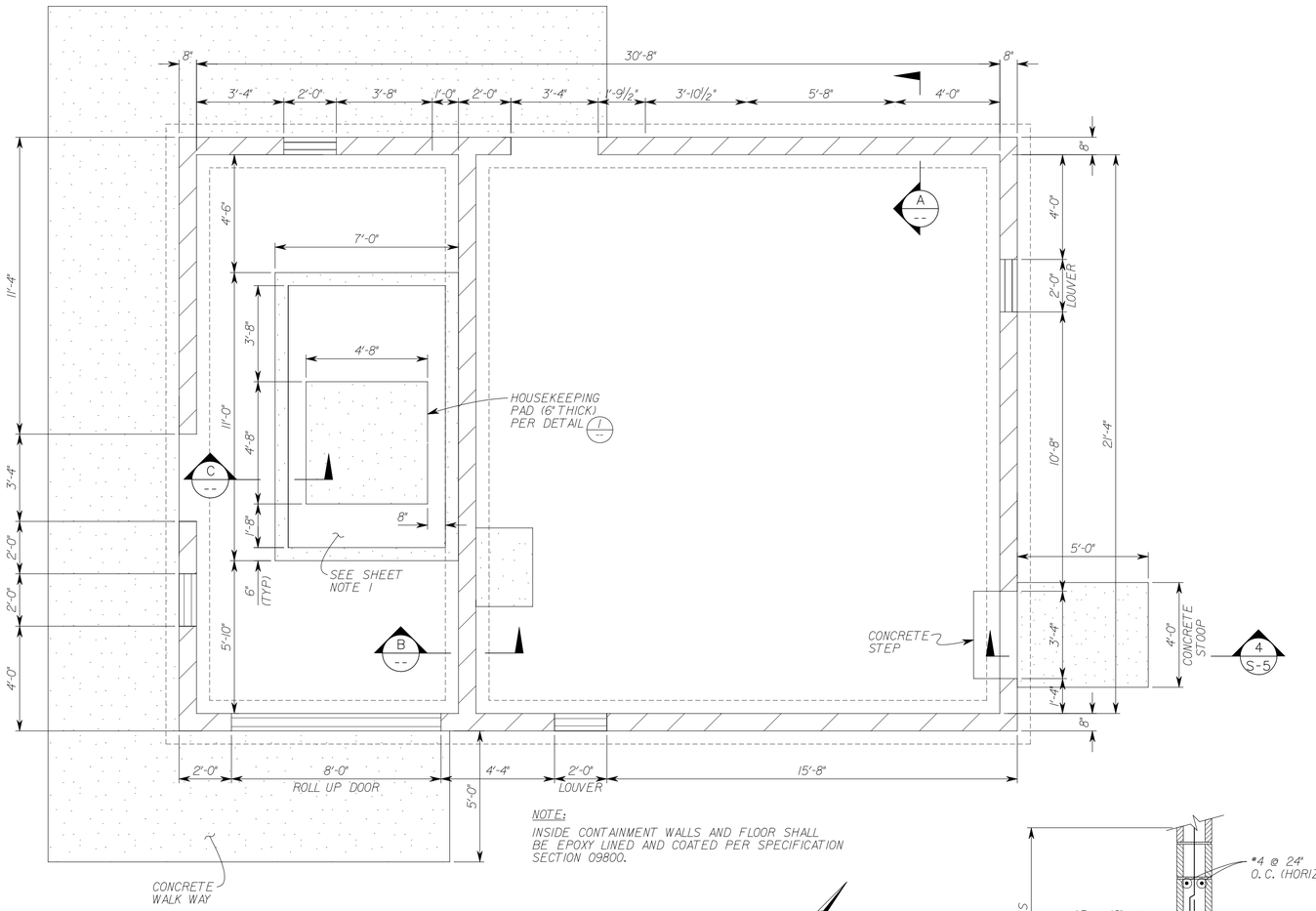

NOTE:
INSIDE CONTAINMENT WALLS AND FLOOR SHALL BE EPOXY LINED AND COATED PER SPECIFICATION SECTION 09800.

FOUNDATION PLAN
SCALE: 3/8" = 1'-0"

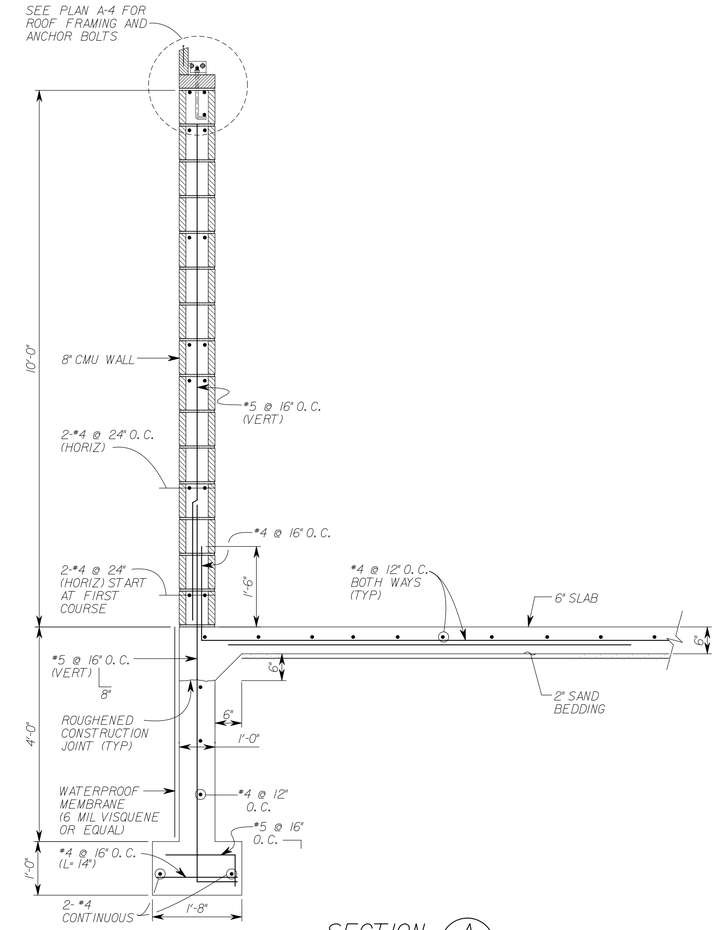

SECTION A
SCALE: 3/4" =1'-0"

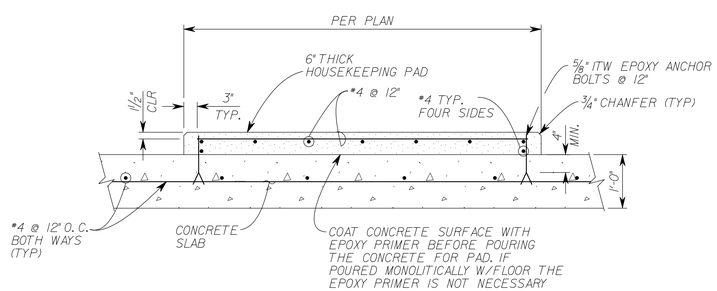

HOUSEKEEPING PAD DETAIL 1
SCALE: 3/4" =1'-0"

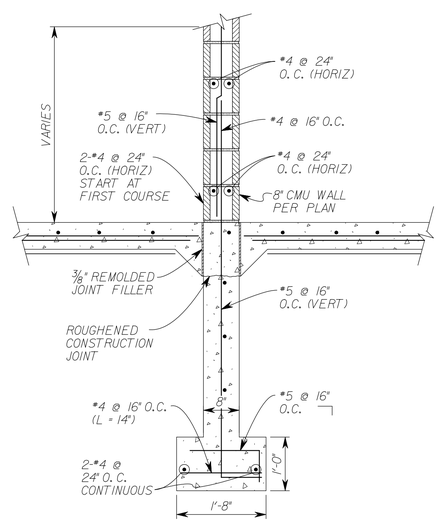

SECTION B
SCALE: 3/4" =1'-0"

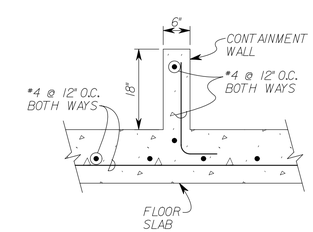

CONTAINMENT WALL DETAIL C
SCALE: 3/4" =1'-0"

AKM JOB No. 0760890.00

Underground Service Alert
Call: TOLL FREE 811
TWO WORKING DAYS BEFORE YOU DIG

0 1/2 1 — 24x36 FORMAT IF THIS BAR MEASURES 1" THEN DRAWING SCALE IS AS NOTED
12x18 FORMAT
0 1/4 1/2 — WARNING IF THIS BAR MEASURES 1/2" THEN DRAWING IS NOT FULL SCALE AND IS 50% REDUCED

Designed by	Drawn by	Checked by
KEVIN SALEH	CADD	GARY J. HOBSON

PLANS PREPARED UNDER SUPERVISION OF GARY J. HOBSON
Date MARCH 2010 R.C.E. No. 40779

Date	By	REVISIONS	App'd

AKM CONSULTING ENGINEERS
553 WALD
IRVINE, CA. 92618
(949) 753-7333

CDWP _____
WMWD _____

Department of Water and Power Approval
By _____ Donald A. Williams, P.E. R.C.E. No. 32333 EXP 12/31/2010

Approved _____
By _____ Jeffrey D. Sims, P.E. R.C.E. No. 46212, Exp. 12/31/10 Assistant General Manager/ Chief Operations Officer

Approved _____
By _____ Kip D. Field, P.E. R.C.E. No. 45679, Exp. 12/31/10 Public Works Director

CITY OF CORONA - ARLINGTON DESALTER CONNECTION
WESTERN MUNICIPAL WATER DISTRICT - PROMENADE CONNECTION
FOUNDATION PLAN AND DETAILS

Drawing No. 09-050U
S-2
Sht. 11 of 24

REGISTERED PROFESSIONAL ENGINEER GARY J. HOBSON No. 40779 Exp. 3/31/11 CIVIL STATE OF CALIFORNIA

N:\0760 Corona\998 Arlington Desalter Connection - Final Plan Revisions\11_S-2_found_pln.dgn 3/29/2010