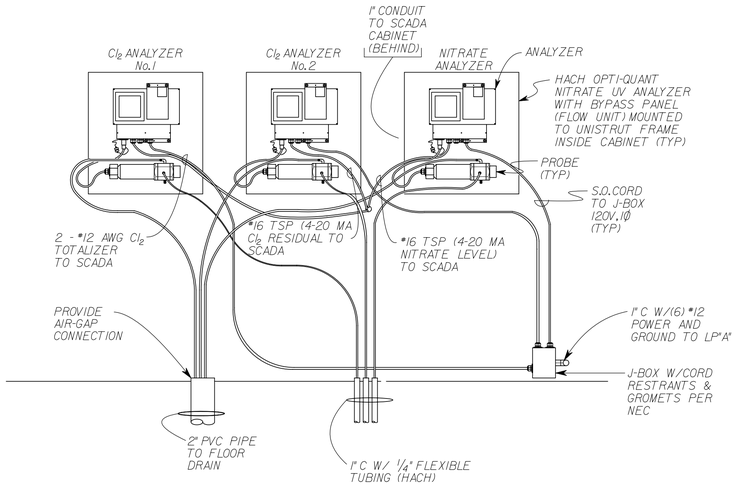

NITRATE ANALYZER ELEVATION

NOT TO SCALE

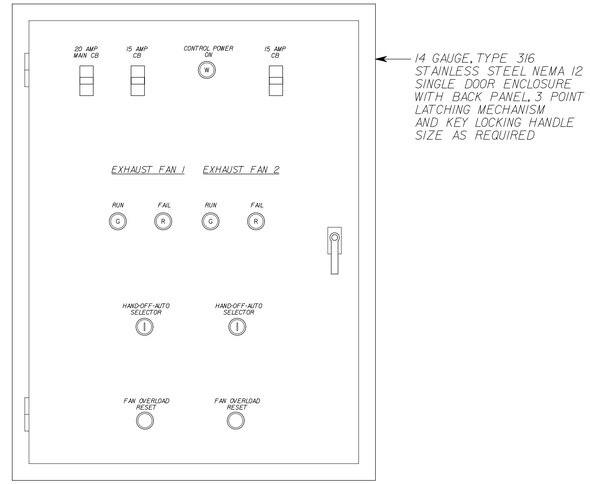

EXHAUST FANS 1 AND 2

BUILDING FAN CONTROL PANEL LAYOUT (1 / --)

NOT TO SCALE

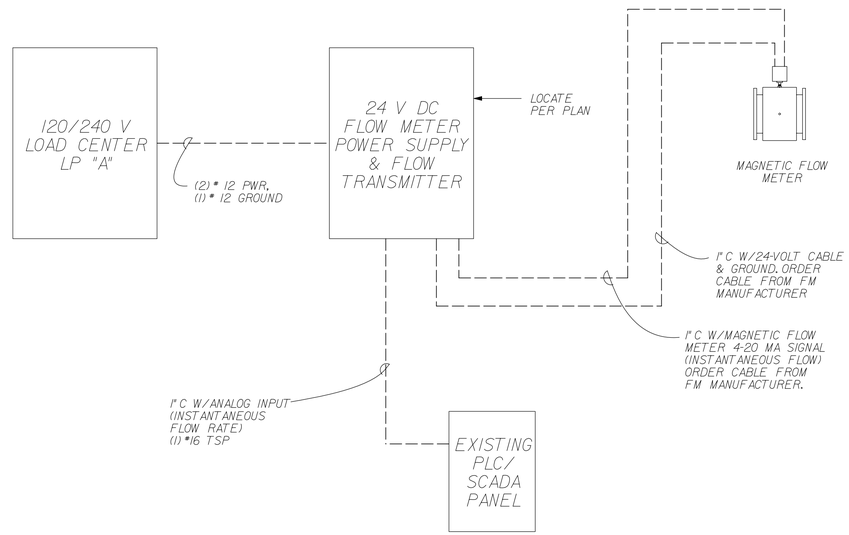

FLOW METER POWER & SIGNAL DIAGRAM

NOT TO SCALE

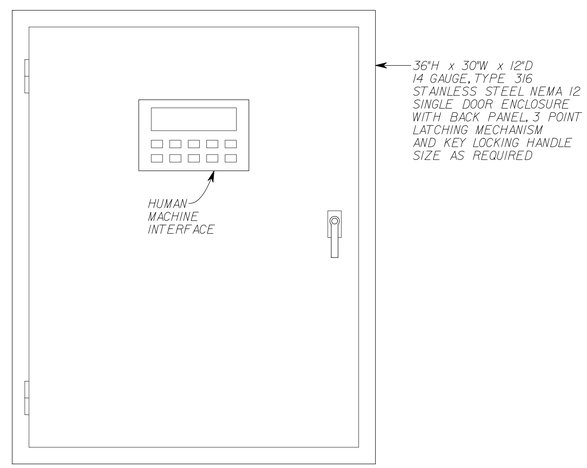

SCADA PANEL ENCLOSURE

NOT TO SCALE

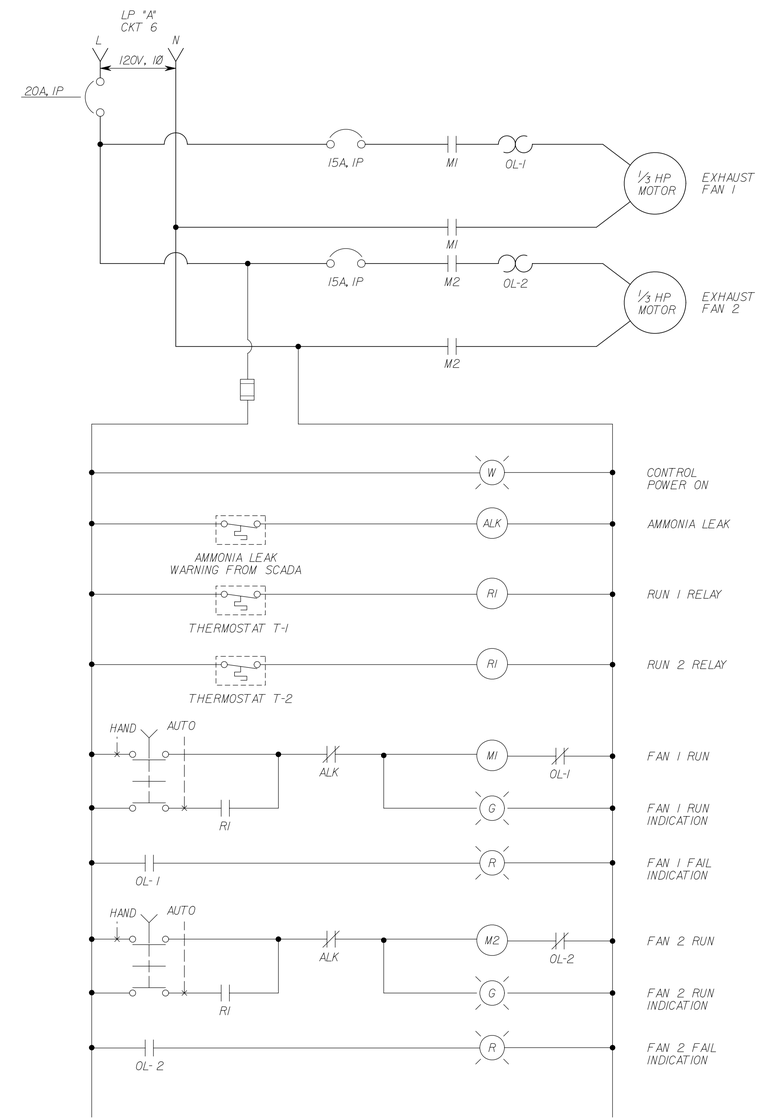

BUILDING, EXHAUST FAN CONTROL DIAGRAM

SHOWN FOR EXHAUST FANS 1 AND 2

AKM JOB No. 0760890.00

Underground Service Alert
Call: TOLL FREE 811
TWO WORKING DAYS BEFORE YOU DIG

REGISTERED PROFESSIONAL ENGINEER GARY J. HOBSON No. 40779 Exp. 3/31/11 CIVIL STATE OF CALIFORNIA

0 1/2 1 — 24x36 FORMAT IF THIS BAR MEASURES 1" THEN DRAWING SCALE IS AS NOTED
0 1/4 1/2 — 12x18 FORMAT WARNING IF THIS BAR MEASURES 1/2" THEN DRAWING IS NOT FULL SCALE AND IS 50% REDUCED

Designed by	Drawn by	Checked by
JUSTIN M. LEE	CADD	GARY J. HOBSON

PLANS PREPARED UNDER SUPERVISION OF GARY J. HOBSON
Date MARCH 2010 R.C.E. No. 40779

Date	By	REVISIONS	App'd

AKM CONSULTING ENGINEERS
553 WALD
IRVINE, CA. 92618
(949) 753-7333

CDWP
WMWD

Department of Water and Power Approval
By Donald A. Williams, P.E. R.C.E. No. 32333 EXP 12/31/2010

Approved
By Jeffrey D. Sims, P.E. R.C.E. No. 46212, Exp. 12/31/10 Assistant General Manager/ Chief Operations Officer

Approved
By Kip D. Field, P.E. R.C.E. No. 45679, Exp. 12/31/10 Public Works Director

CITY OF CORONA - ARLINGTON DESALTER CONNECTION
WESTERN MUNICIPAL WATER DISTRICT - PROMENADE CONNECTION
NITRATE ANALYZER ELEVATION AND CONTROL DIAGRAMS

Drawing No. 09-050U
E-6
Sht. 20 of 24

N:\0760 Corona\998 Arlington Desalter Connection - Final Plan Revisions\20_E-6_elc_diag.dgn 3/29/2010