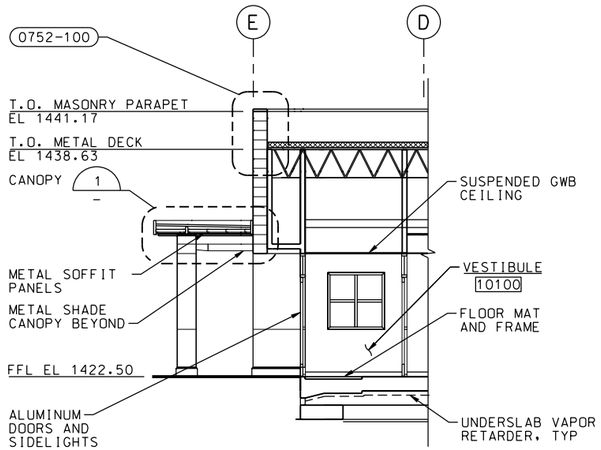

SECTION C
3/16=1'-0"
A-1, A-2, A-3, A-4, A-5, A-10

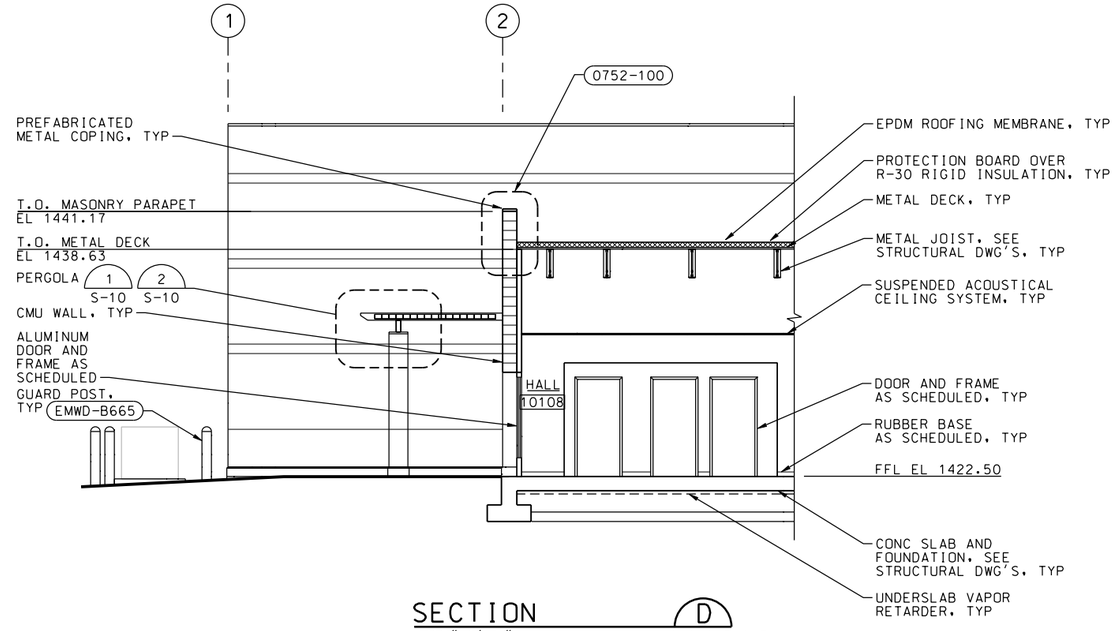

SECTION D
3/16"=1'-0"
A-1, A-2, A-3, A-4, A-5, A-8, A-9

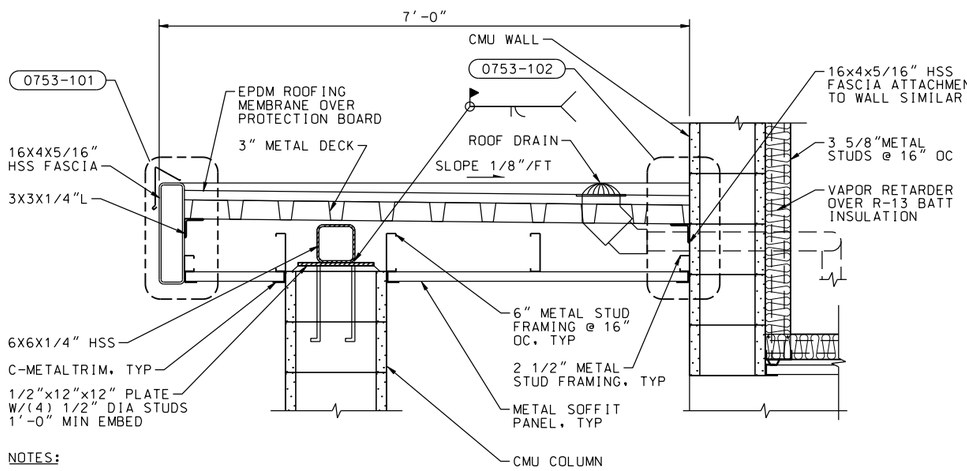

NOTES:

1. METAL STUD FRAMING IS SPECIFIED IN SECTION 09 22 00.

CANOPY FRAMING 1
1"=1'-0"

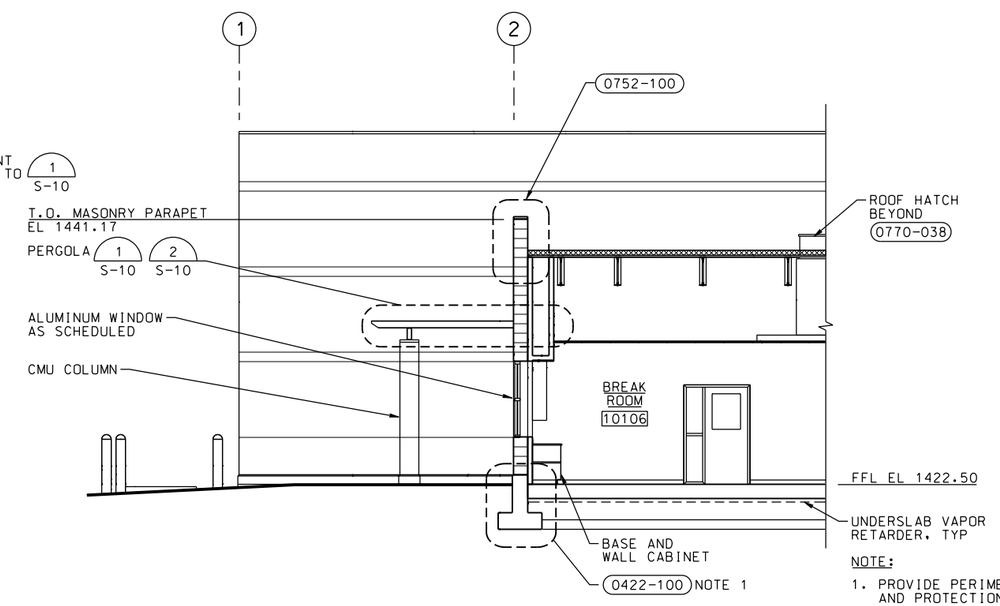

NOTE:

1. PROVIDE PERIMETER INSULATION AND PROTECTION BOARD AT ALL FURRED AND INSULATED EXTERIOR WALLS.

SECTION E
3/16=1'-0"
A-1, A-2, A-3, A-4, A-5, A-9

LICENSED ARCHITECT SKIP FRESN 12414 Exp. 12-31-11 STATE OF CALIFORNIA
DATE: 10/05/09

A-7

SHEET 42 OF 226 SHEETS

SYMBOL	DESCRIPTIONS	DATE	APPROVAL

REVISIONS

EASTERN MUNICIPAL WATER DISTRICT
PERRIS II DESALINATION FACILITY
PERRIS, CALIFORNIA

ADMIN AREA
SECTION SHEET 2

DESIGNED BY: G KIRSTEN
DRAWN BY: A VARGAS
CHECKED BY: S FRESN

U.S. ARMY ENGINEER DISTRICT
LOS ANGELES
CORPS OF ENGINEERS

CH2MHILL

SUBMITTED BY:
ART JUNG, P.E.
CHIEF, DESIGN BRANCH

CADD FILE NAME: PDFa302d.dgn
SPEC. NO.: NOT APPLICABLE
L.A. DISTRICT FILE NO. XXX-XXXX

NDM-SCO:EMWD USACE PERRIS II/ PDFa302d.dgn PLOT DATE: 2/19/2010 PLOT TIME: 10:55:20 AM