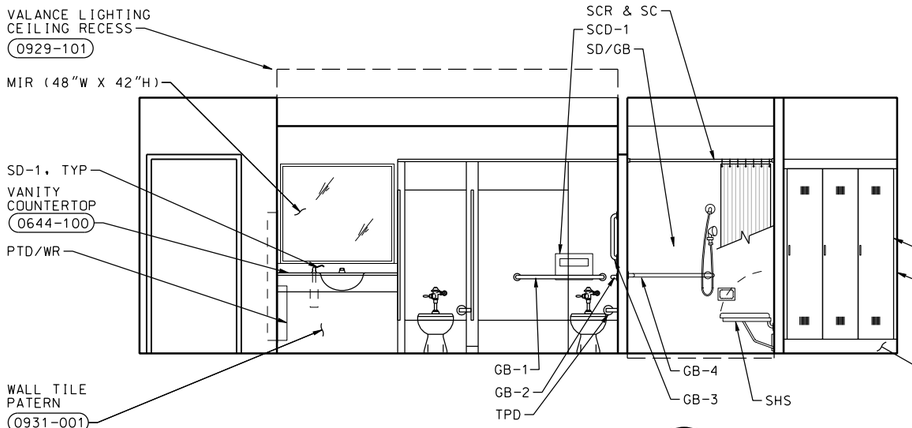

RM 10109 INTERIOR ELEVATION 1A
3/8"=1'-0" A-8

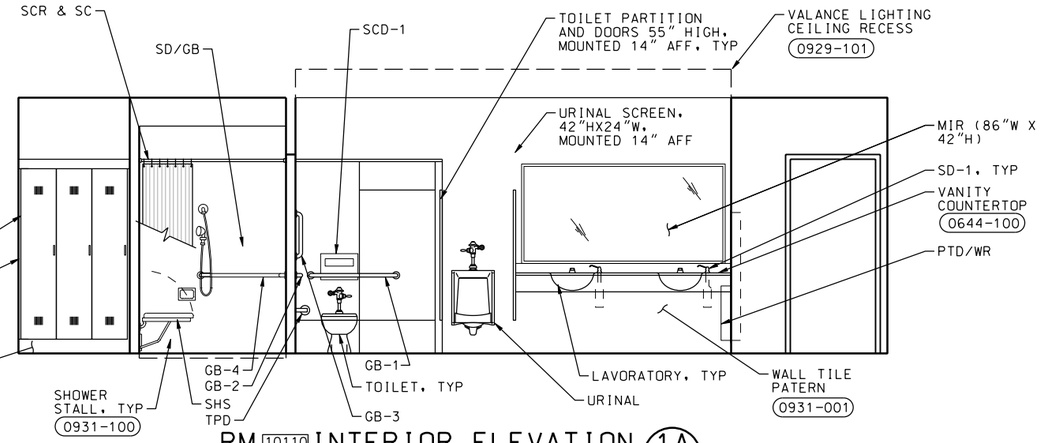

RM 10110 INTERIOR ELEVATION 1A
3/8"=1'-0" A-8

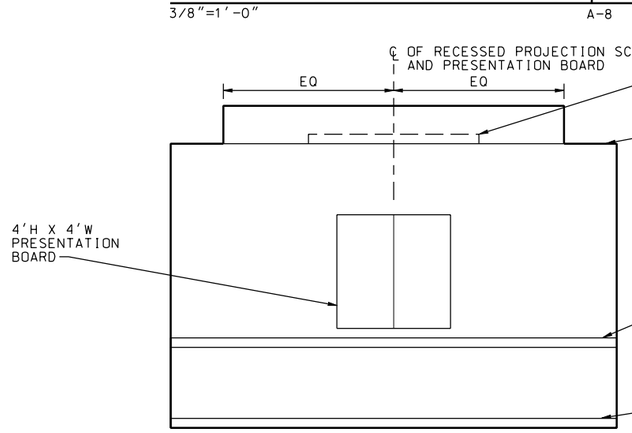

RM 10103 INTERIOR ELEVATION 1A
3/8"=1'-0" A-9

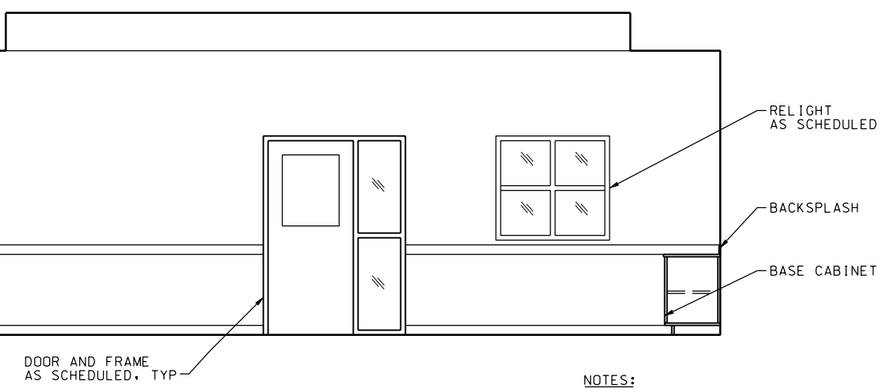

RM 10103 INTERIOR ELEVATION 1B
3/8"=1'-0" A-9

NOTES:

1. FOR TOILET ACCESSORY ABBREVIATIONS SEE TOILET ACCESSORY SCHEDULE ON DWG A-25.

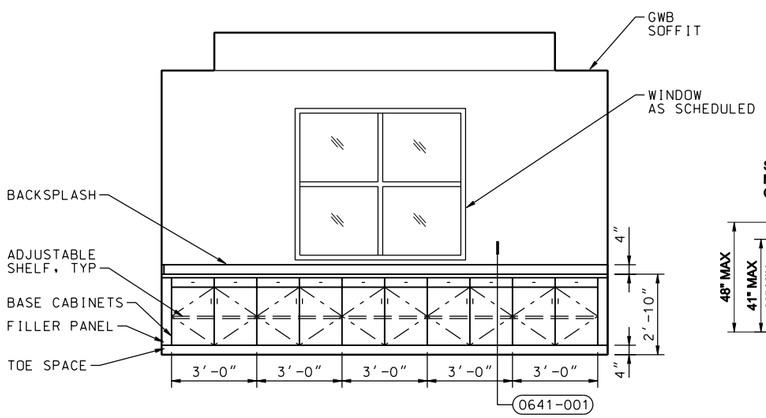

RM 10103 INTERIOR ELEVATION 1C
3/8"=1'-0" A-9

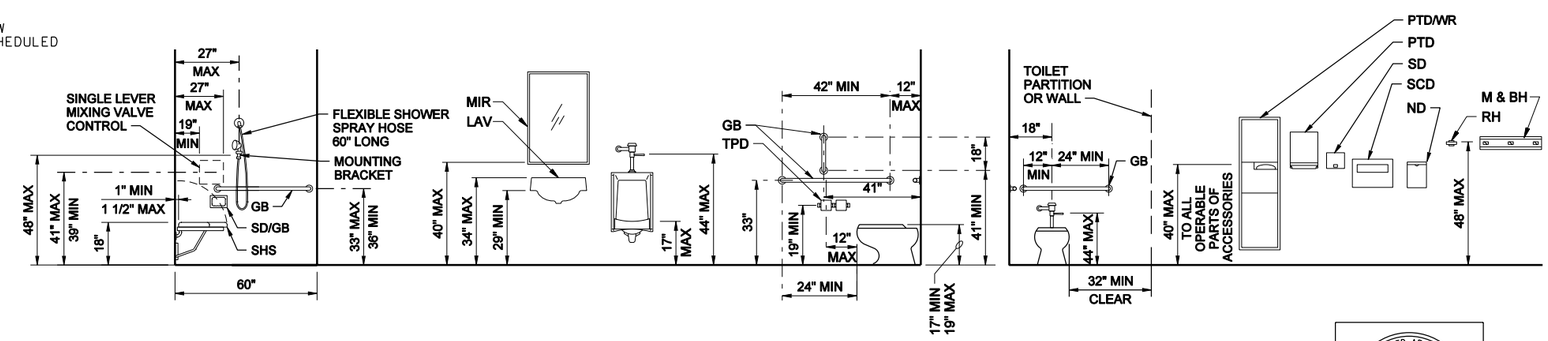

STANDARD ACCESSIBLE FIXTURE MOUNTING LOCATIONS 1
NTS A-8

LICENSED ARCHITECT SKIP FRESN 012414 EXP. 12-31-11 STATE OF CALIFORNIA
DATE: 10/05/09

SYMBOL	DESCRIPTIONS	DATE	APPROVAL

REVISIONS

EASTERN MUNICIPAL WATER DISTRICT
PERRIS II DESALINATION FACILITY
PERRIS, CALIFORNIA

ADMIN AREA INTERIOR
ELEVATIONS SHEET 1

DESIGNED BY: G KIRSTEN
DRAWN BY: A VARGAS
CHECKED BY: S FRESN

U.S. ARMY ENGINEER DISTRICT
LOS ANGELES
CORPS OF ENGINEERS

CADD FILE NAME: PDFa203d.dgn

CH2MHILL

SUBMITTED BY:
ART JUNG, P.E.
CHIEF, DESIGN BRANCH

SPEC. NO.: NOT APPLICABLE

L.A. DISTRICT FILE NO. XXX-XXXX

A-12

SHEET 47 OF 226 SHEETS

PLOT DATE: 2/19/2010 PLOT TIME: 10:55:59 AM

NDM-SCO:EMWD USACE PERRIS II/PDFa203d.dgn