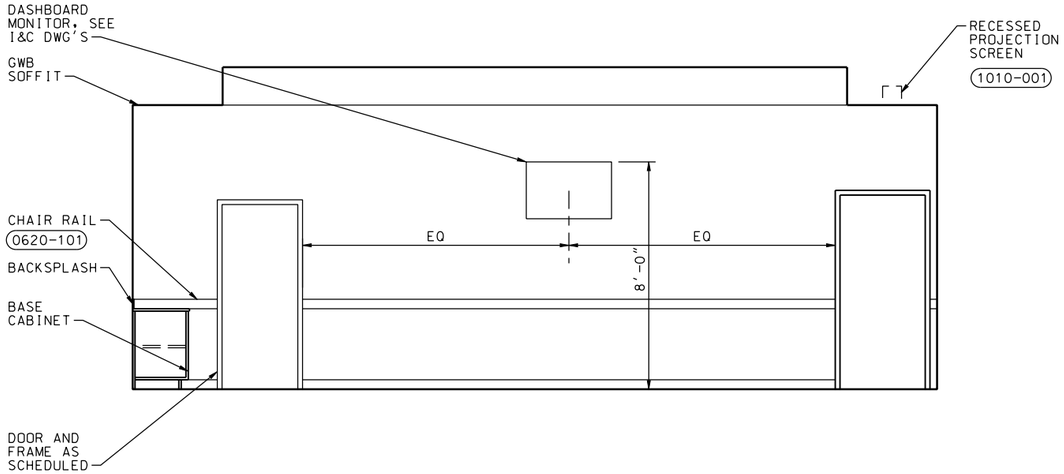

RM 10103 INTERIOR ELEVATION 1D
3/8"=1'-0" A-9

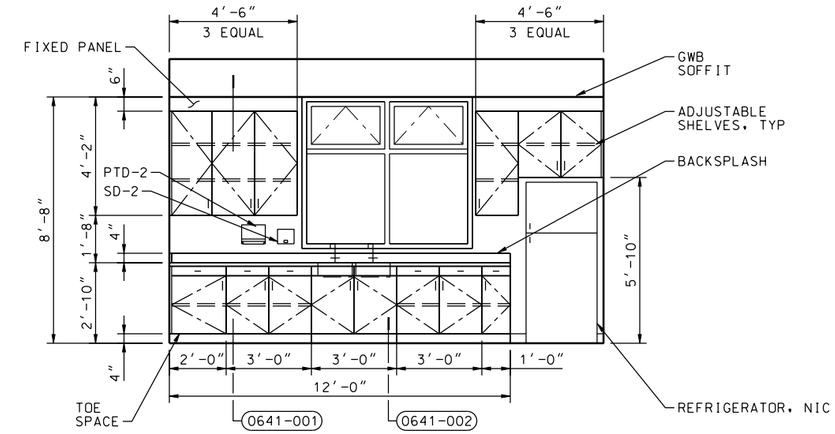

RM 10106 INTERIOR ELEVATION 1A
3/8"=1'-0" A-9

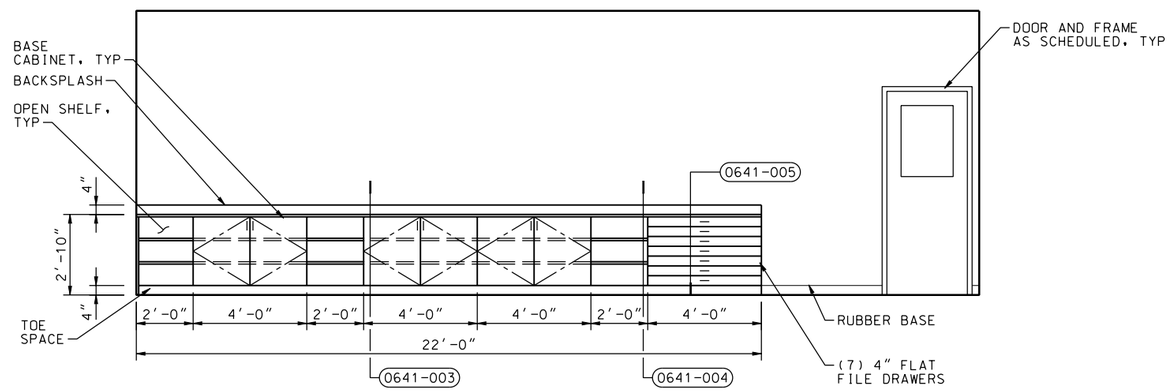

RM 10102 INTERIOR ELEVATION 1A
3/8"=1'-0" A-10

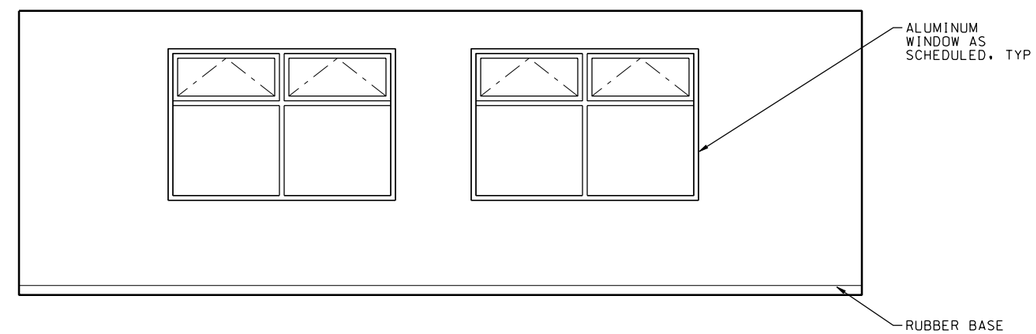

RM 10102 INTERIOR ELEVATION 1B
3/8"=1'-0" A-10

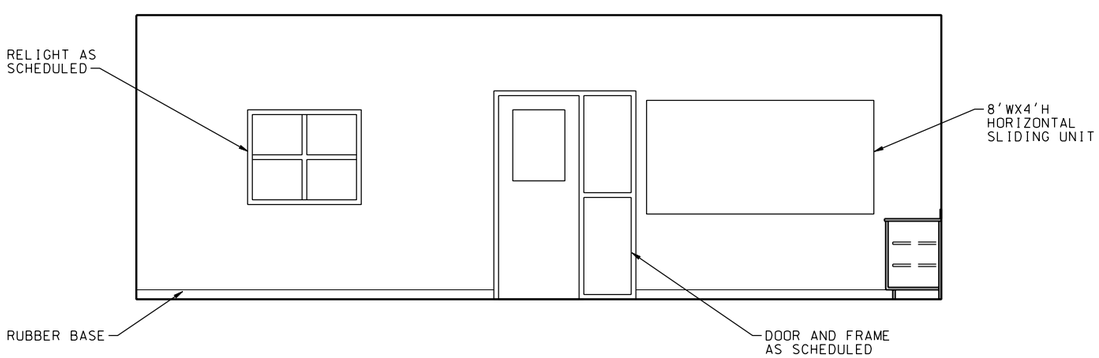

RM 10102 INTERIOR ELEVATION 1C
3/8"=1'-0" A-10

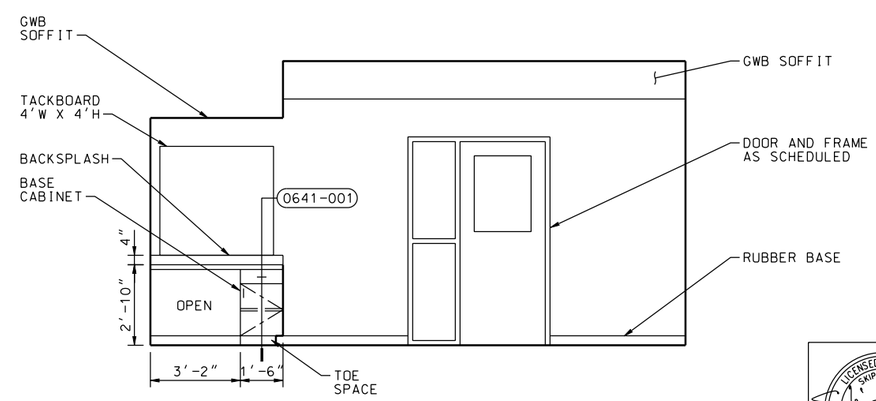

RM 10101 INTERIOR ELEVATION 1A
3/8"=1'-0" A-10

LICENSED ARCHITECT SKIP FRESN 012414 Exp. 12-31-11 STATE OF CALIFORNIA
DATE: 10/05/09

SYMBOL	DESCRIPTIONS	DATE	APPROVAL

REVISIONS

EASTERN MUNICIPAL WATER DISTRICT
PERRIS II DESALINATION FACILITY
PERRIS, CALIFORNIA

ADMIN AREA INTERIOR
ELEVATIONS SHEET 2

DESIGNED BY: G KRSTEN
DRAWN BY: A VARGAS
CHECKED BY: S FRESN

U.S. ARMY ENGINEER DISTRICT
LOS ANGELES
CORPS OF ENGINEERS

CADD FILE NAME: PDFa2044d.dgn

SPEC. NO.: NOT APPLICABLE

CH2MHILL

SUBMITTED BY:
ART JUNG, P.E.
CHIEF, DESIGN BRANCH

L.A. DISTRICT FILE NO. XXX-XXXX

A-13

SHEET 48 OF 226 SHEETS

PLOT DATE: 2/19/2010 PLOT TIME: 10:56:09 AM

NDM-SCO:EMWD USACE PERRIS II/ PDFa2044d.dgn