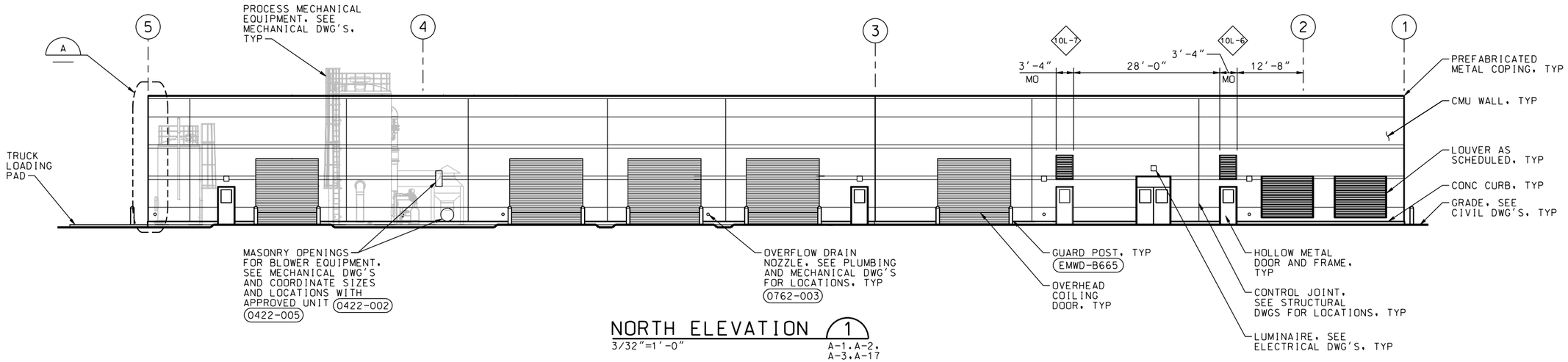

NORTH ELEVATION 1
3/32"=1'-0"
A-1.A-2. A-3.A-17

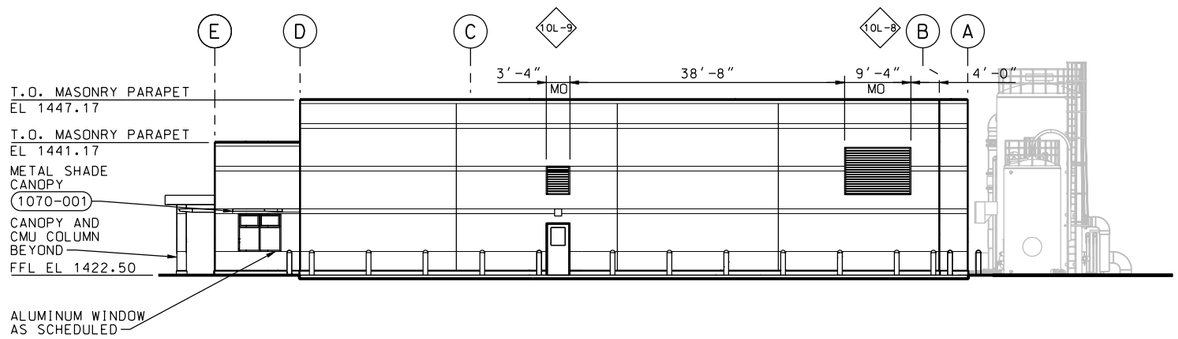

EAST ELEVATION 2
3/32"=1'-0"
A-1.A-2.A-17

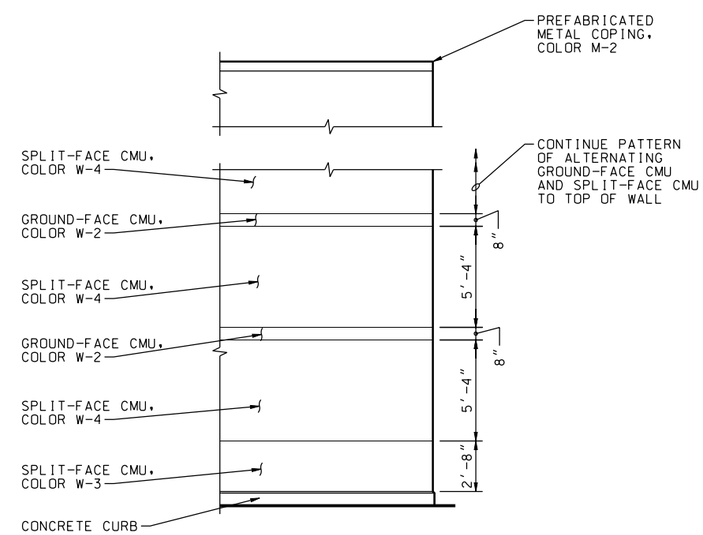

NOTE:

1. PATTERN OCCURS AT ALL CMU WALLS AND COLUMNS.

ENLARGED ELEVATION A
1/4"=1'-0"
A-16

LICENSED ARCHITECT SKIP FRESN 012414 Exp. 12-31-11 STATE OF CALIFORNIA
DATE: 10/05/09

SYMBOL	DESCRIPTIONS	DATE	APPROVAL

REVISIONS

EASTERN MUNICIPAL WATER DISTRICT
PERRIS II DESALINATION FACILITY
PERRIS, CALIFORNIA

OPERATIONS BUILDING
ELEVATIONS SHEET 1

U.S. ARMY ENGINEER DISTRICT
LOS ANGELES
CORPS OF ENGINEERS

DESIGNED BY: G KIRSTEN
DRAWN BY: A VARGAS
CHECKED BY: S FRESN

CH2MHILL

SUBMITTED BY:
ART JUNG, P.E.
CHIEF, DESIGN BRANCH

CADD FILE NAME: PDFa201d.dgn
SPEC. NO.: NOT APPLICABLE
L.A. DISTRICT FILE NO. XXX-XXXX

A-15

SHEET 50 OF 226 SHEETS

PLOT DATE: 2/19/2010 PLOT TIME: 10:56:29 AM
NDM-SCO:EMWD USACE PERRIS II/ PDFa201d.dgn