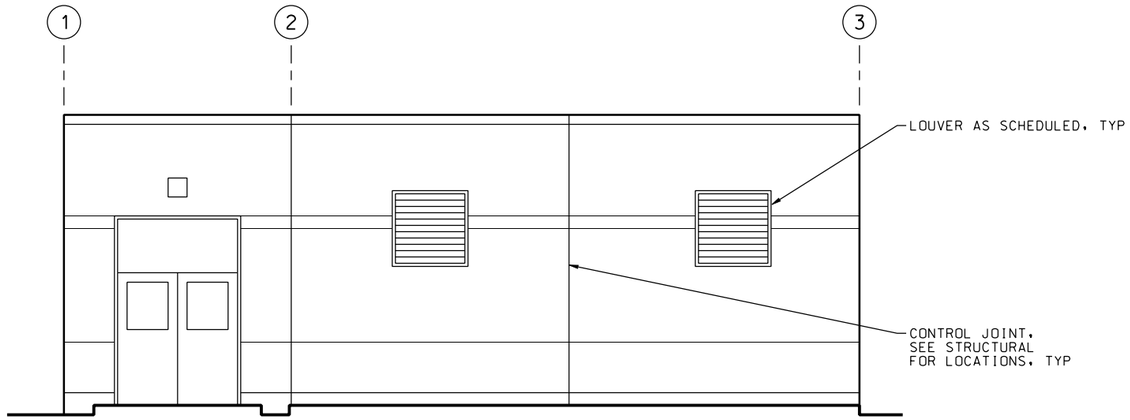

NORTH ELEVATION 1
1/4"=1'-0' A-20

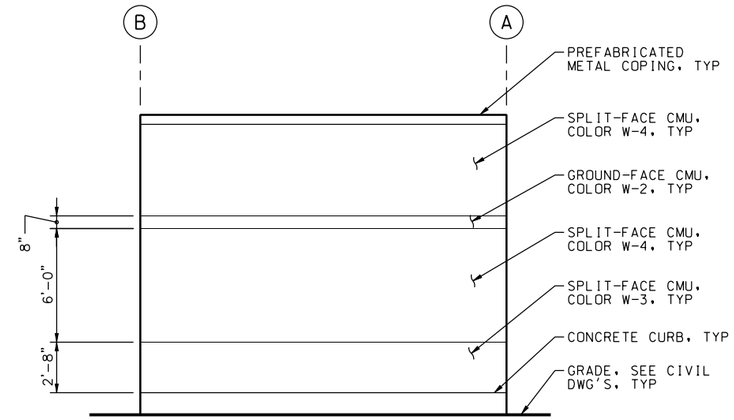

EAST ELEVATION 3
1/4"=1'-0' A-20

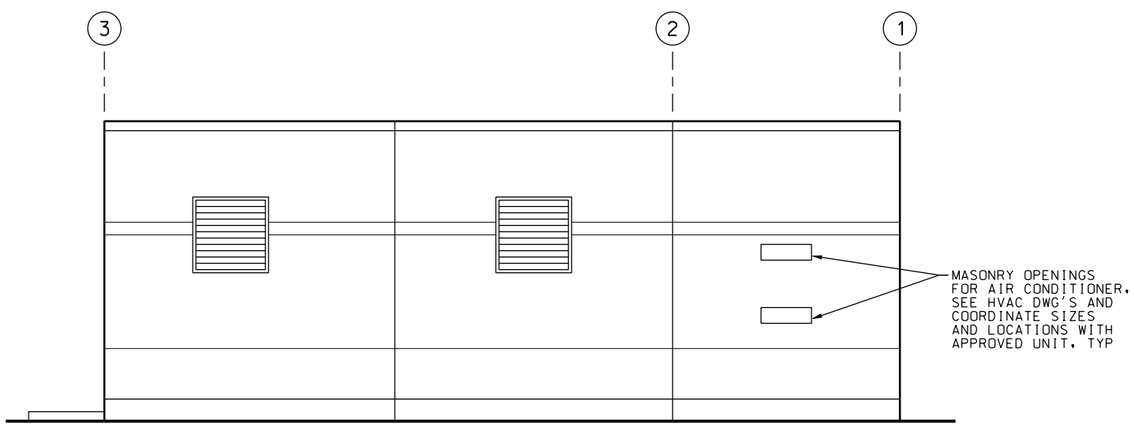

SOUTH ELEVATION 2
1/4"=1'-0' A-20

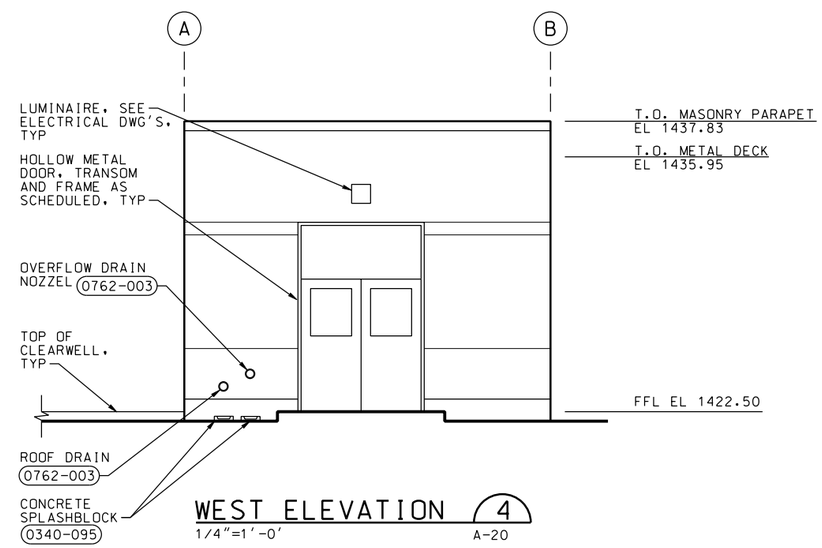

WEST ELEVATION 4
1/4"=1'-0' A-20

LICENSED ARCHITECT SKIP FRESH 012414 Exp. 12-31-11 STATE OF CALIFORNIA
DATE: 10/05/09

SYMBOL	DESCRIPTIONS	DATE	APPROVAL

REVISIONS

EASTERN MUNICIPAL WATER DISTRICT
PERRIS II DESALINATION FACILITY
PERRIS, CALIFORNIA

FINISHED WATER PUMP STATION
BUILDING ELEVATIONS

DESIGNED BY: G KIRSTEN
DRAWN BY: A VARGAS
CHECKED BY: S FRESN

U.S. ARMY ENGINEER DISTRICT
LOS ANGELES
CORPS OF ENGINEERS

CH2MHILL

SUBMITTED BY: ART JUNG, P.E.
CHIEF, DESIGN BRANCH

CADD FILE NAME: PDFa208d.dgn
SPEC. NO.: NOT APPLICABLE
L.A. DISTRICT FILE NO. XXX-XXXX

A-21
SHEET 56 OF 226 SHEETS

PLOT DATE: 2/19/2010 PLOT TIME: 10:57:24 AM
NDM-SCO:EMWD USACE PERRIS II/ PDFa208d.dgn