SIGN SCHEDULE

NOTES:

1. LETTERS REFER TO SIGN TYPES SPECIFIED IN SECTION 10 14 00.
2. NUMBERS REFER TO DESIGN DETAILS THAT SHOW SIGN LAYOUT.

		SIZE			MOUNTING			LETTERING					
TYPE (NOTE 1)	FORMAT (NOTE 2)	WIDTH	HEIGHT	COLOR	LOCATION	METHOD	HEIGHT TO TOP	HEIGHT	STYLE	COLOR	MESSAGE	FACES	OTHER REQUIREMENTS
C	1014-002	20"	14"	YELLOW	HANGING	CHAIN	5'-6"	1" MIN	HELVETICA	BLACK	CAUTION Equipment Starts Automatically	1	PROVIDE AT ALL EQUIPMENT THAT STARTS AUTOMATICALLY
C	1014-002	20"	14"	YELLOW	WALL	BOLTS	5'-6"	1" MIN	HELVETICA	BLACK	CAUTION Ear Protection Required	1	
C	1014-001	20"	14"	WHITE	DOOR	SCREWS OR BOLTS	5'-6"	1" MIN	HELVETICA	BLACK	DANGER High Voltage	1	PROVIDE AT DOORS OF ELECTRICAL ROOMS
C	1014-001	20"	14"	WHITE	WALL	BOLTS	5'-6"	1" MIN	HELVETICA	BLACK	DANGER No Smoking	1	
C	1014-001	20"	14"	WHITE	WALL	BOLTS	3'-6"	1" MIN	HELVETICA	BLACK	DANGER Nonpotable Water Not for Drinking	1	PROVIDE AT INTERIOR W2 HOSE VALVES
C	1014-001	10"	7"	WHITE	DOOR	SCREWS	5'-6"	1" MIN	HELVETICA	BLACK	DANGER CONFINED SPACE AUTHORIZED EMPLOYEES ONLY	1	PROVIDE AT CLEARWELL
H	1014-006	10" MIN	10" MIN	*	WALL	SCREWS	5'-6"	4"	BLOCK	BLACK	*	1	* SEE FORMAT DETAIL AND SPEC ARTICLE, SIGNS
B	1014-011	7"	10"	WHITE	DOOR/WALL	SCREWS/ BOLTS	5'-6"	2 1/2"	BLOCK	BLACK	NOT AN EXIT	1	PROVIDE AT DOOR 10115E - BOTH SIDES
C	1014-003	20"	14"	ORANGE	WALL	BOLTS	5'-6"	1" MIN	HELVETICA	BLACK	WARNING Corrosive Materials Wear Required Protection	1	PROVIDE AT CHEMICAL STORAGE ROOM #1& #2
C	1014-003	20"	14"	ORANGE	WALL	BOLTS	5'-6"	1" MIN	HELVETICA	BLACK	WARNING Eye Protection Required in this Area	1	PROVIDE AT CHEMICAL STORAGE ROOM #1& #2

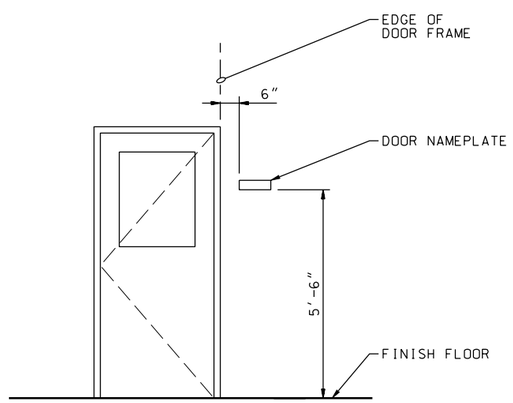

TYPICAL DOOR NAMEPLATE MOUNTING AT WALL (1)
NTS
A-22

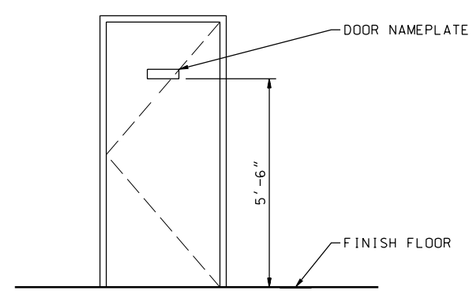

TYPICAL DOOR NAMEPLATE MOUNTING AT DOOR (2)
NTS
A-22

SYMBOL	DESCRIPTIONS	DATE	APPROVAL
.	.	.	.
.	.	.	.
.	.	.	.

REVISIONS

EASTERN MUNICIPAL WATER DISTRICT
PERRIS II DESALINATION FACILITY
PERRIS, CALIFORNIA

SIGN SCHEDULE

U.S. ARMY ENGINEER DISTRICT
LOS ANGELES
CORPS OF ENGINEERS

DESIGNED BY: G KIRSTEN
DRAWN BY: A VARGAS
CHECKED BY: S FRESN

CH2MHILL

SUBMITTED BY:
ART JUNG, P.E.
CHIEF, DESIGN BRANCH

CADD FILE NAME: PDFa605d.dgn
SPEC. NO.: NOT APPLICABLE
L.A. DISTRICT FILE NO. XXX-XXXX

LICENSED ARCHITECT SKIP FRESN 102414 Exp. 12-31-11 STATE OF CALIFORNIA
DATE: 10/05/09

A-26

SHEET 61 OF 226 SHEETS

NDM-SCO:EMWD USACE PERRIS II/ PDFa605d.dgn PLOT DATE: 2/19/2010 PLOT TIME: 10:58:03 AM