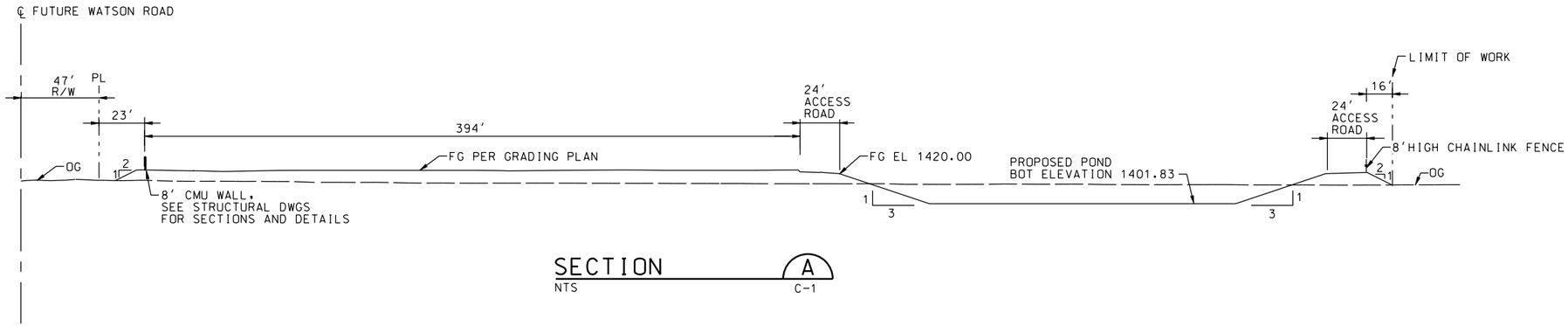

SECTION A
NTS C-1

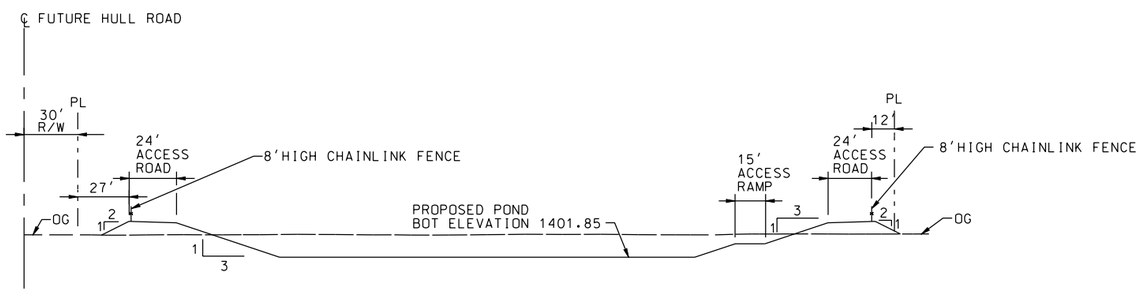

SECTION B
NTS C-1

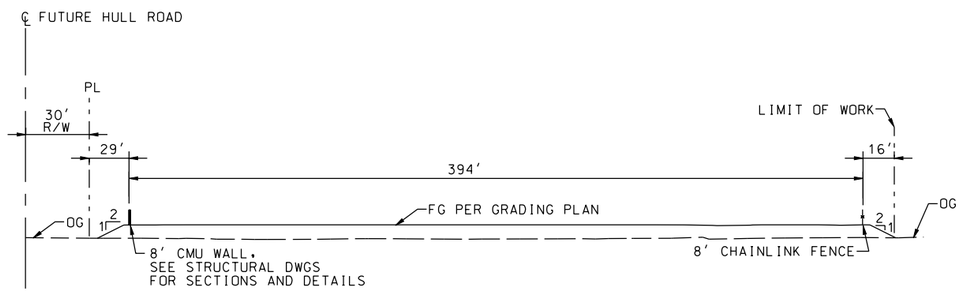

SECTION C
NTS C-1

SYMBOL	DESCRIPTIONS	DATE	APPROVAL

REVISIONS

EASTERN MUNICIPAL WATER DISTRICT
PERRIS II DESALINATION FACILITY
PERRIS, CALIFORNIA

SECTIONS

DESIGNED BY: G NGUYEN
DRAWN BY: A CORDEN
CHECKED BY: M COQUIA

U.S. ARMY ENGINEER DISTRICT
LOS ANGELES
CORPS OF ENGINEERS

CADD FILE NAME: PDFc301d.dgn

CH2MHILL

SUBMITTED BY: ART JUNG, P.E.
CHIEF, DESIGN BRANCH

SPEC. NO.: NOT APPLICABLE

L.A. DISTRICT FILE NO. XXX-XXXX

REGISTERED PROFESSIONAL ENGINEER
GINO NGUYEN
No. C62140
EXP. 09-30-11
CIVIL
STATE OF CALIFORNIA

DATE: 10/05/09

C-8

SHEET 33 OF 226 SHEETS

PLOT DATE: 2/19/2010 PLOT TIME: 10:54:10 AM

NDM-SCO:EMWD USACE PERRIS II/ PDFc301d.dgn