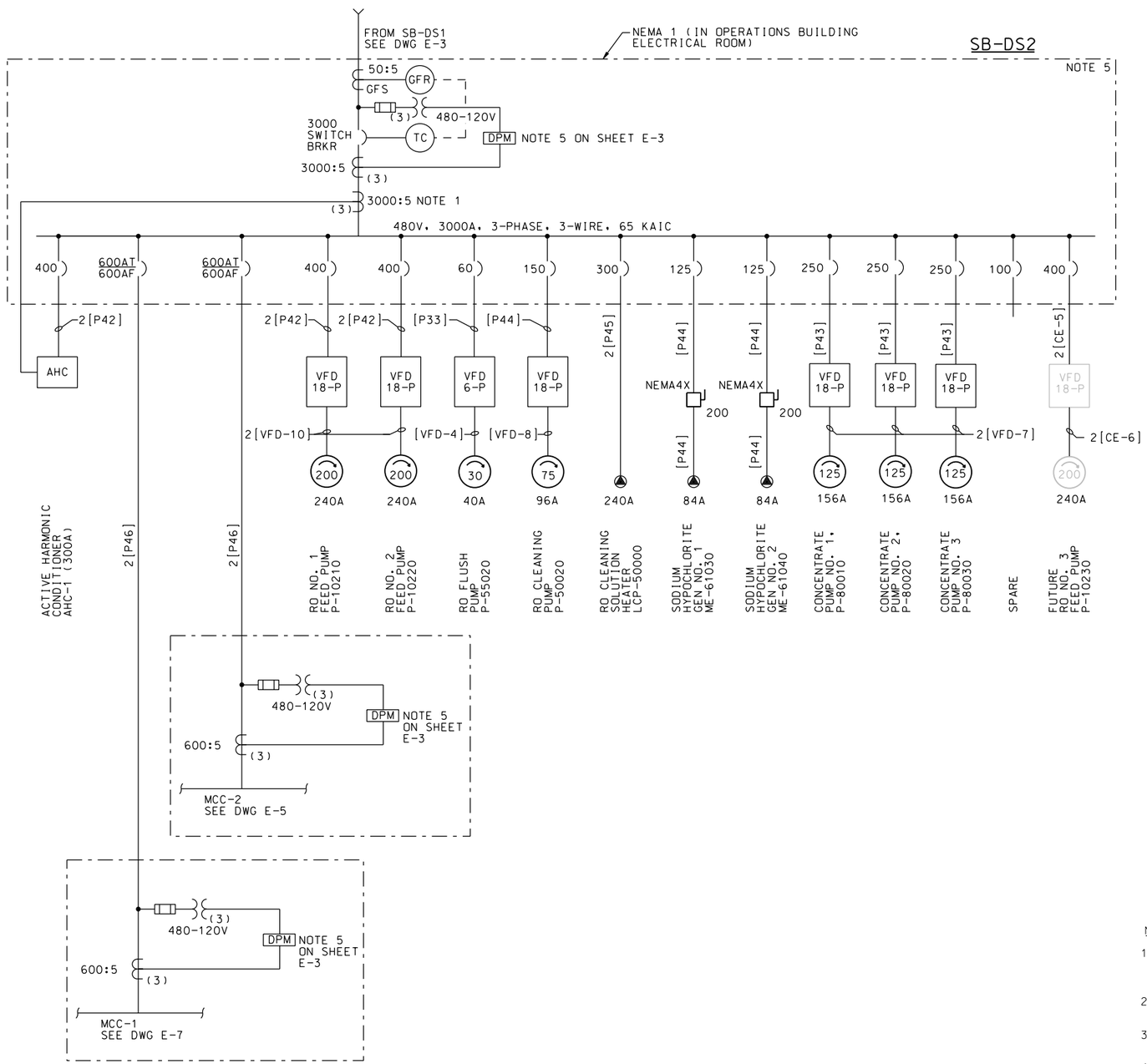

RO PROCESS AREA ONE-LINE DIAGRAM

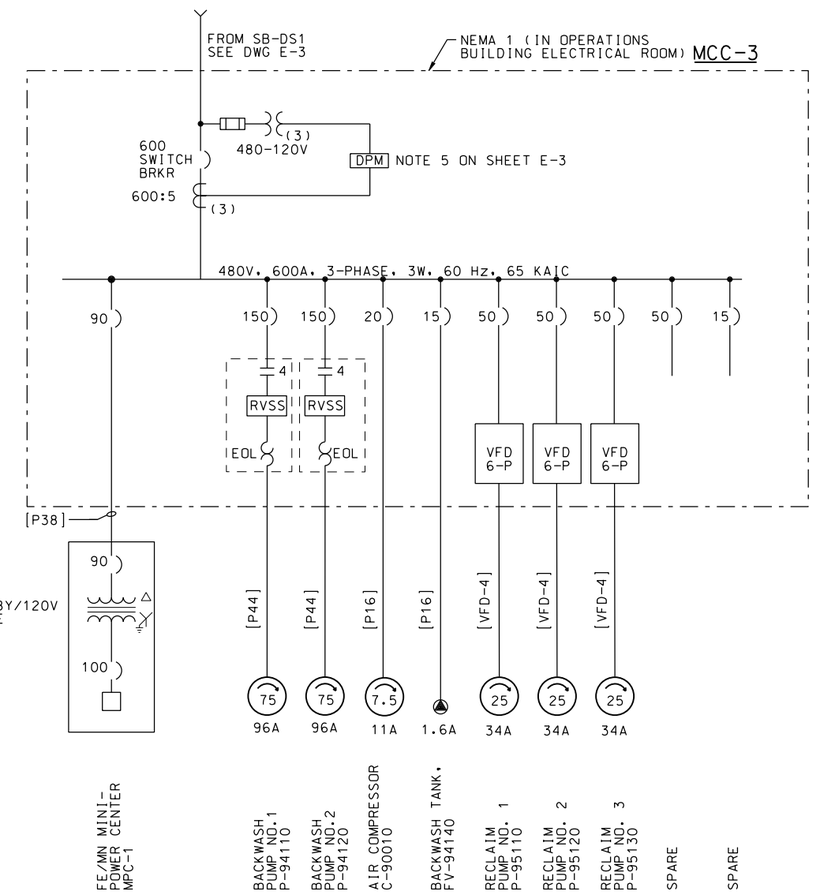

FE/MN PROCESS AREA ONE-LINE DIAGRAM

NOTES:

1. SPECIAL SPLIT CORE CURRENT TRANSFORMER FOR ACTIVE HARMONIC CONDITIONER WILL BE SUPPLIED BY AHC MANUFACTURER AND INSTALLED ON SWITCHBOARD BUS. COORDINATE CT REQUIREMENTS AND CONNECTIONS TO AHC WITH SUPPLIER OF AHC.
2. FOR EQUIPMENT SHOWN AS FUTURE, PROVIDE CONDUITS STUBBED AND CAPPED AT EQUIPMENT LOCATIONS SHOWN AND AT HOMERUN DESTINATION SHOWN.
3. SOLID LINES INDICATE NEW EQUIPMENT INSTALLATION. SCREEN LINES INDICATE FUTURE EQUIPMENT.
4. "18-P" AND "6-P" INDICATES 18-PULSE AND 6-PULSE VFD RESPECTIVELY.
5. BREAKERS, IN SB-DS2, RATED 150 AMPERES AND ABOVE ARE 100% RATED.

REGISTERED PROFESSIONAL ENGINEER RANDALL S. DENTON No. 10438 Exp. 09/30/10 ELECTRICAL STATE OF CALIFORNIA
DATE: 10/05/09

SYMBOL	DESCRIPTIONS	DATE	APPROVAL

REVISIONS

EASTERN MUNICIPAL WATER DISTRICT
PERRIS II DESALINATION FACILITY
PERRIS, CALIFORNIA

OPERATIONS BUILDING
ONE LINE DIAGRAM 1

U.S. ARMY ENGINEER DISTRICT
LOS ANGELES
CORPS OF ENGINEERS

DESIGNED BY: A MATHEWS
DRAWN BY: J HAMNER
CHECKED BY: R DENTON

CH2MHILL

SUBMITTED BY:
ART JUNG, P.E.
CHIEF, DESIGN BRANCH

CADD FILE NAME: PDFe602d.dgn
SPEC. NO.: NOT APPLICABLE
L.A. DISTRICT FILE NO. XXX-XXXX

E-4

SHEET 149 OF 226 SHEETS

NDM-SCO:EMWD USACE PERRIS II/ PDFe602d.dgn PLOT DATE: 2/19/2010 PLOT TIME: 11:07:23 AM