NOTES:

1. FIRE SYSTEM RISER DIAGRAM DESIGN IS BASED ON CYBERCAT MODEL 1016 FROM FACILITIES PROTECTION SYSTEMS. (MICK DAWSON: 714-257-2244)
2. CONTRACTOR SHALL PROVIDE AND INSTALL CABLES AND CONDUITS FOR FIRE ALARM DEVICES AS DIAGRAMMATICALLY SHOWN ON RISER DIAGRAM AND VENDOR SUBMITTAL. CONTRACTOR SHALL CONNECT ALL DEVICES PER VENDOR'S FINAL APPROVED DRAWINGS. CONTRACTOR SHALL COORDINATE REQUIREMENTS WITH THE VENDOR. PROVIDE ADDITIONAL DEVICES, CABLES AND/OR CONDUITS FOR A COMPLETE FUNCTIONAL SYSTEM IN ACCORDANCE WITH FINAL VENDOR DRAWINGS AT NO ADDITIONAL COST TO THE OWNER.
3. PROVIDE 3/4" CONDUIT BETWEEN DEVICES.
4. SEE STANDARD DETAILS FP-1, FP-2 AND FP-3.
5. SEE SHEET E-10 FOR ADDITIONAL CONDUIT REQUIREMENTS.

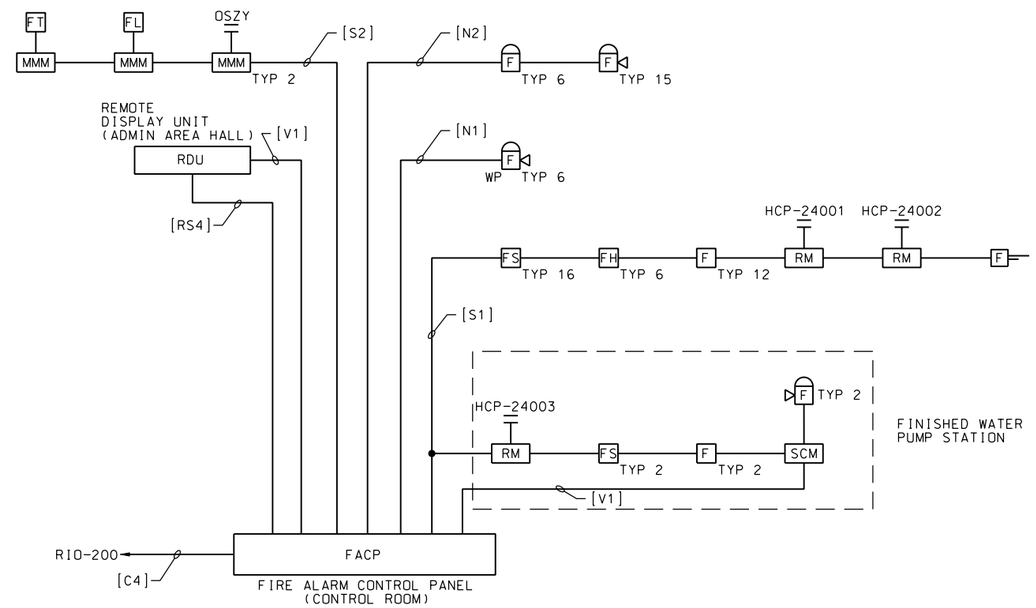

FIRE ALARM RISER DIAGRAM

NOTE 5

ABBREVIATIONS:

MMM - MINI MONITOR MODULE
RDU - REMOTE DISPLAY UNIT
RM - RELAY MODULE INTERFACE
SCM - SUPERVISORY CONTROL MODULE

CONDUCTOR DESCRIPTION

S :ADDRESSABLE SIGNALING LINE CIRCUIT (SLC)———STYLE "4" CLASS "B"
D :INITIATING DEVICE CIRCUIT (IDC)———STYLE "A" CLASS "B"
N :NOTIFICATION APPLIANCE CIRCUIT (NAC)———STYLE "Y" CLASS "B"
C :EQUIPMENT CONTROL INTERFACE———UN-SUPERVISED
V :24 VOLT DC AUXILIARY OUTPUT CIRCUIT
RS2 :RECOMMENDED STANDARD 232 SERIAL COMMUNICATION CKT (EIA-232)
RS4 :RECOMMENDED STANDARD 485 MULTI POINT SERIAL COMMUNICATION CKT (EIA-485)
+ :OUT GOING AND RETURN CONDUCTORS (IN & OUT)

SYM	DESCRIPTION	CONDUCTOR	SIZE	TYPE	COMMENTS
S1	SLC ADDRESSABLE LOOP-1 CKT.	TWO	#16 AWG	TWISTED	RED/BLACK
S2	SLC ADDRESSABLE LOOP-2 CKT.	TWO	#16 AWG	TWISTED	RED/BLACK
N1	NAC FIRE ALARM HORN/STROBES CKT. 1	TWO	#14 AWG	THHN	RED/BLUE
N2	NAC FIRE ALARM HORN/STROBES CKT. 2	TWO	#14 AWG	THHN	RED/BLUE
V1	24 VOLT AUXILIARY CKT. 1	TWO	#14 AWG	THHN	RED/BLACK
RS4	RS-485 REMOTE DISPLAY/GRAPHICS COMMUNICATION CKT.	TWO	9641	BELDEN	CABLE

REGISTERED PROFESSIONAL ENGINEER RANDALL S. DENTON No. 10438 Exp. 09/30/10 ELECTRICAL STATE OF CALIFORNIA
DATE: 10/05/09

REVISIONS

SYMBOL	DESCRIPTIONS	DATE	APPROVAL

EASTERN MUNICIPAL WATER DISTRICT
PERRIS II DESALINATION FACILITY
PERRIS, CALIFORNIA

FIRE SYSTEM RISER DIAGRAM

U.S. ARMY ENGINEER DISTRICT
LOS ANGELES
CORPS OF ENGINEERS

DESIGNED BY: A MATHEWS
DRAWN BY: J HAMNER
CHECKED BY: R DENTON

CH2MHILL

SUBMITTED BY: ART JUNG, P.E. CHIEF, DESIGN BRANCH

CADD FILE NAME: PDFe608d.dgn
SPEC. NO.: NOT APPLICABLE
L.A. DISTRICT FILE NO. XXX-XXXX

E-8

SHEET 153 OF 226 SHEETS

PLOT DATE: 2/19/2010 PLOT TIME: 11:07:31 AM
NDM-SCO:EMWD USACE PERRIS II/ PDFe608d.dgn