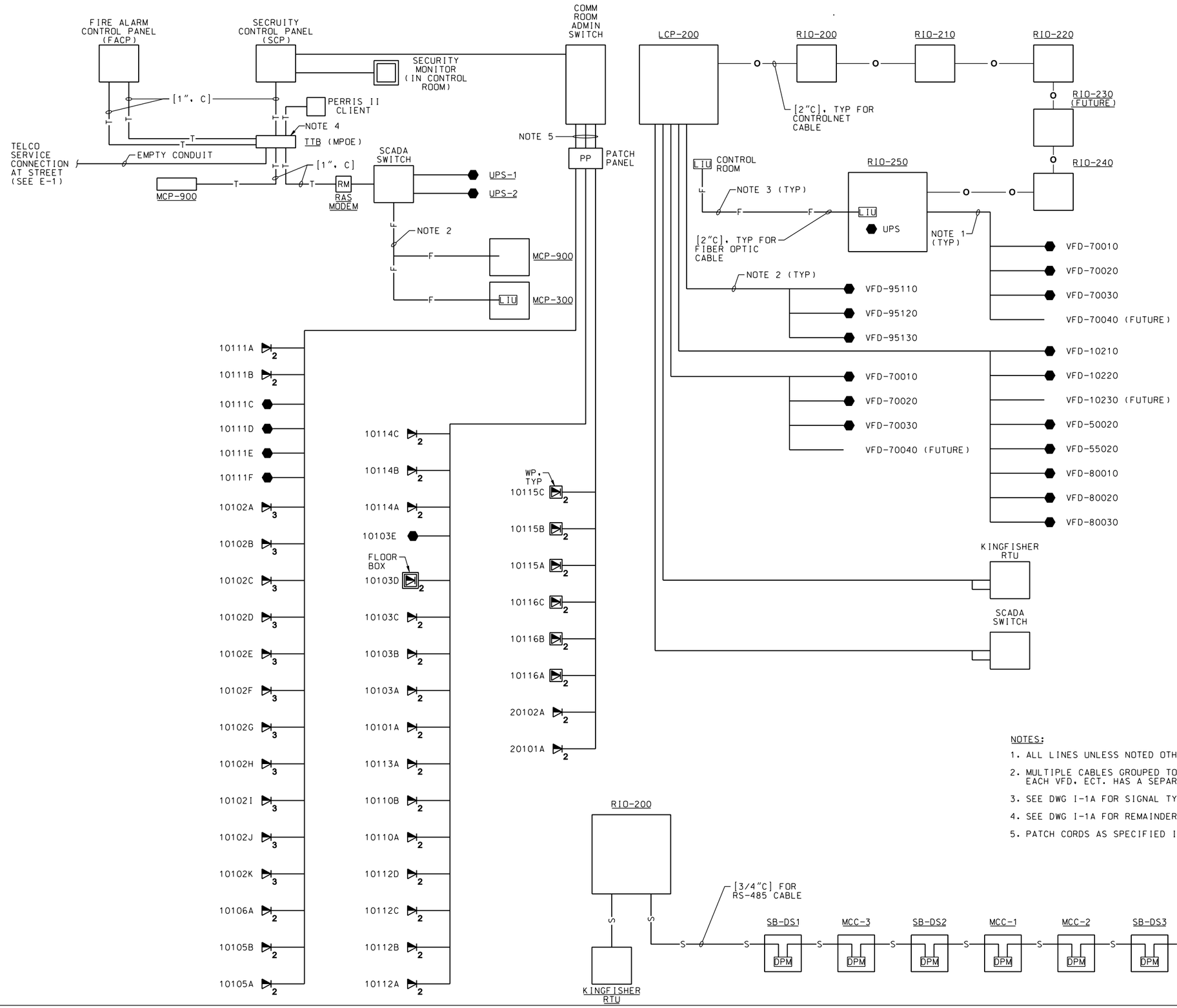

NOTES:

1. ALL LINES UNLESS NOTED OTHERWISE ARE CAT6 CABLE IN 3/4" CONDUIT.
2. MULTIPLE CABLES GROUPED TOGETHER FOR CLARITY. EACH VFD, ECT. HAS A SEPARATE CABLE (NO DAISY CHAIN)
3. SEE DWG I-1A FOR SIGNAL TYPE DEFINITIONS.
4. SEE DWG I-1A FOR REMAINDER OF WORK ASSOCIATED WITH TTB.
5. PATCH CORDS AS SPECIFIED IN 271000.

REGISTERED PROFESSIONAL ENGINEER RANDALL S. DENTON No. 10438 Exp. 09/30/10 ELECTRICAL STATE OF CALIFORNIA

DATE: 10/05/09

SYMBOL	DESCRIPTIONS	DATE	APPROVAL

REVISIONS

EASTERN MUNICIPAL WATER DISTRICT
PERRIS II DESALINATION FACILITY
PERRIS, CALIFORNIA

COMMUNICATION RISER DIAGRAM

U.S. ARMY ENGINEER DISTRICT
LOS ANGELES
CORPS OF ENGINEERS

DESIGNED BY: A MATHEWS
DRAWN BY: J HAMNER
CHECKED BY: R DENTON

CH2MHILL

SUBMITTED BY: ART JUNG, P.E.
CHIEF, DESIGN BRANCH

CADD FILE NAME: PDFe610d.dgn

SPEC. NO.: NOT APPLICABLE

L.A. DISTRICT FILE NO. XXX-XXXX

E-10

SHEET 155 OF 226 SHEETS

NDM-SCO:EMWD USACE PERRIS II/ PDFe610d.dgn PLOT DATE: 2/19/2010 PLOT TIME: 11:07:44 AM