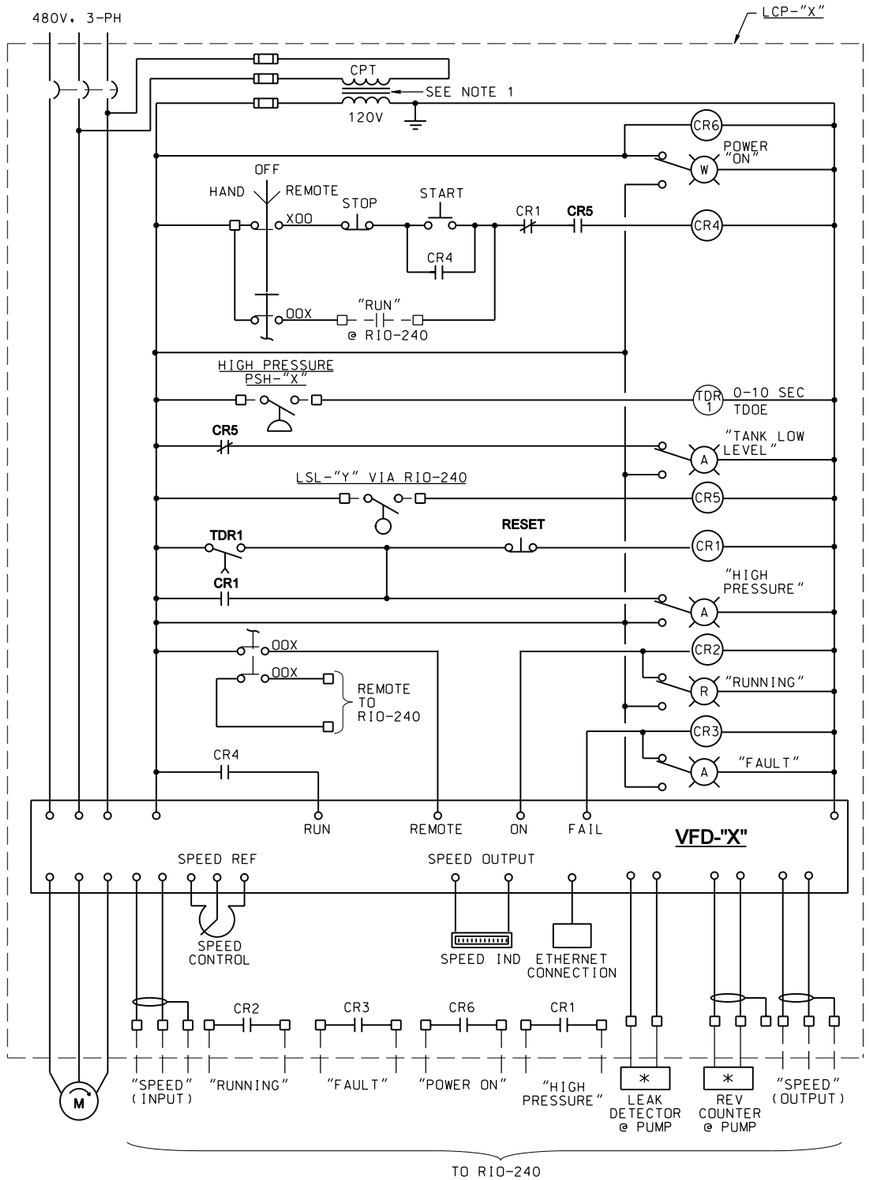

CHEMICAL FEED PUMPS (TYPICAL)

X = 61110, 61120, 61130, 61140, 61150, 61160
Y = 61021
X = 64110, 64120
Y = 64010
X = 62110, 62120
Y = 62010
X = 65110, 65120
Y = 65010
X = 63110, 63120
Y = 63010
X = 66110, 66120
Y = 66010
X = 67110, 67120
Y = 67020

NOTES:

1. PROVIDE CPT SIZED TO MEET REQUIREMENTS OF THE ACTUAL EQUIPMENT SUPPLIED. COORDINATE EXACT REQUIREMENTS WITH MOTOR AND/OR PUMP SUPPLIER MANUFACTURER. MINIMUM SIZE SHALL BE 100VA.
2. DIAGRAMS ARE TYPICAL AND ARE MEANT TO SHOW THE NUMBER AND FUNCTION OF THE VARIOUS COMPONENTS AND SIGNALS WITHIN THE MOTOR CONTROLLERS AND BETWEEN FIELD DEVICES, MOTOR CONTROLLERS AND OTHER DEVICES (EG. PLC'S). THE CONTRACTOR SHALL COORDINATE THE FINAL REQUIREMENTS AND MAKE ALL ADJUSTMENTS NECESSARY AS REQUIRED BY THE ACTUAL EQUIPMENT SUPPLIED. SEE SPECIFICATIONS FOR ADDITIONAL VFD REQUIREMENTS.
3. ADD FACILITY NUMBER "D0010" PREFIX TO ALL TAG NUMBERS.

LEGEND:

☐ INDICATES TERMINAL AT LCP

⊠ INDICATES TERMINAL AT TERMINAL JUNCTION BOX AT OR NEAR MOTOR

- – INDICATES FIELD WIRING

* APPLIES TO : P-66110, 66120, P-67110, 67120 ONLY

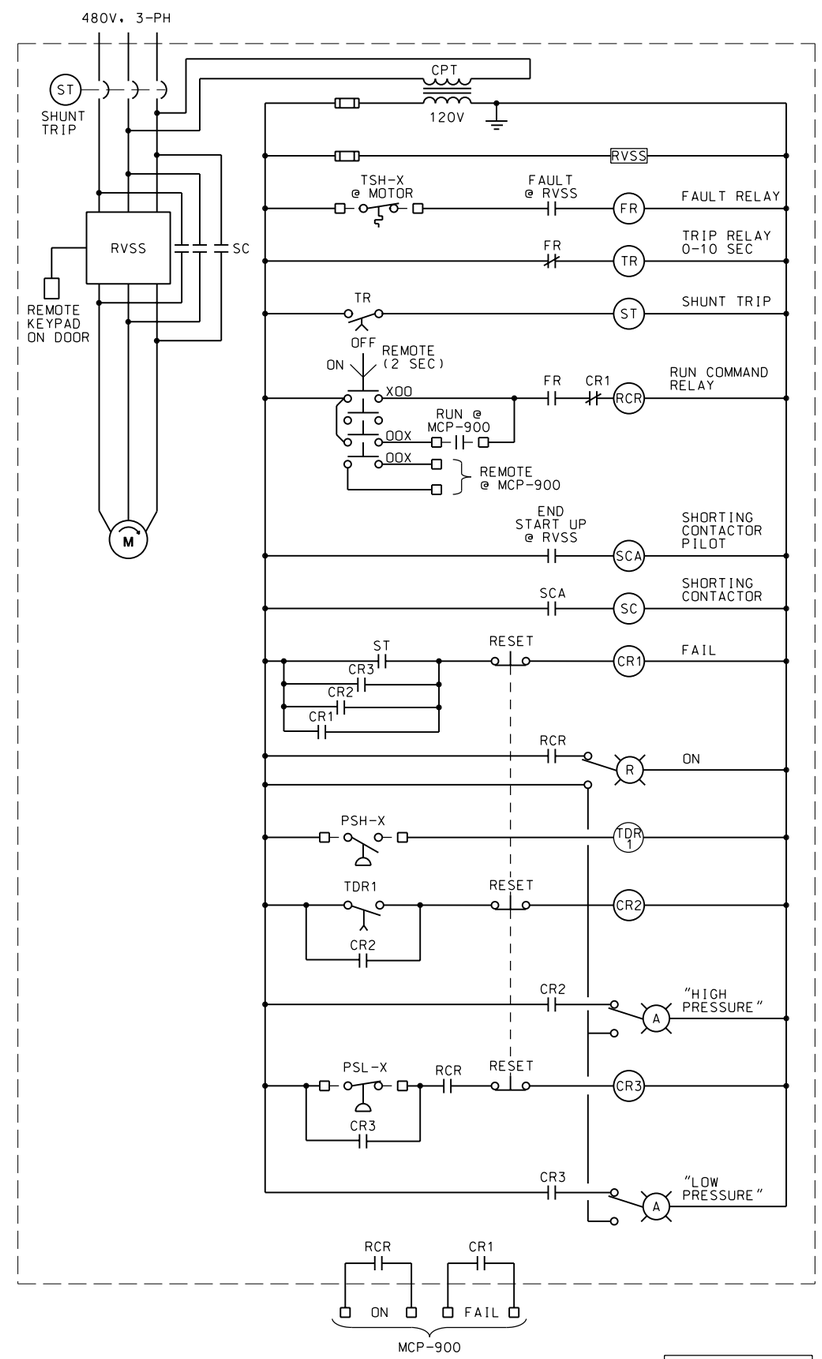

BACKWASH PUMPS

P = 94110, 94120
X = 94110, 94120

REGISTERED PROFESSIONAL ENGINEER RANDALL S. DENTON No. 10438 Exp. 09/30/10 ELECTRICAL STATE OF CALIFORNIA

DATE: 10/05/09

SYMBOL	DESCRIPTIONS	DATE	APPROVAL

REVISIONS

EASTERN MUNICIPAL WATER DISTRICT
PERRIS II DESALINATION FACILITY
PERRIS, CALIFORNIA

MOTOR CONTROL SCHEMATICS 3

DESIGNED BY: A MATHEWS
DRAWN BY: J HAMNER
CHECKED BY: R DENTON

U.S. ARMY ENGINEER DISTRICT
LOS ANGELES
CORPS OF ENGINEERS

CH2MHILL

SUBMITTED BY:
ART JUNG, P.E.
CHIEF, DESIGN BRANCH

CADD FILE NAME: PDFe633d.dgn
SPEC. NO.: NOT APPLICABLE
L.A. DISTRICT FILE NO. XXX-XXXX

E-33

SHEET 178 OF 226 SHEETS

PLOT DATE: 2/19/2010 PLOT TIME: 11:10:23 AM

NDM-SCO:EMWD USACE PERRIS II/ PDFe633d.dgn