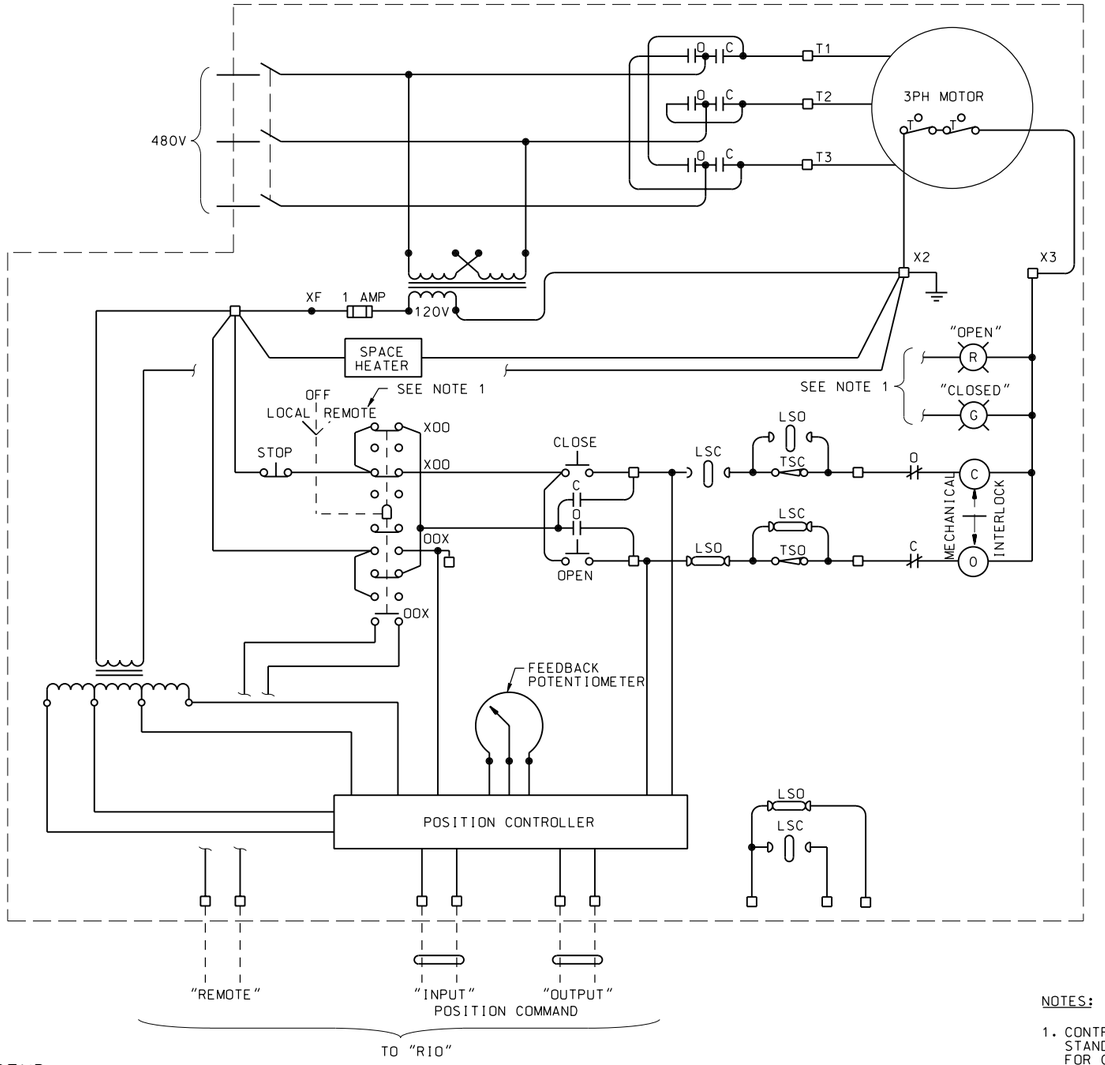

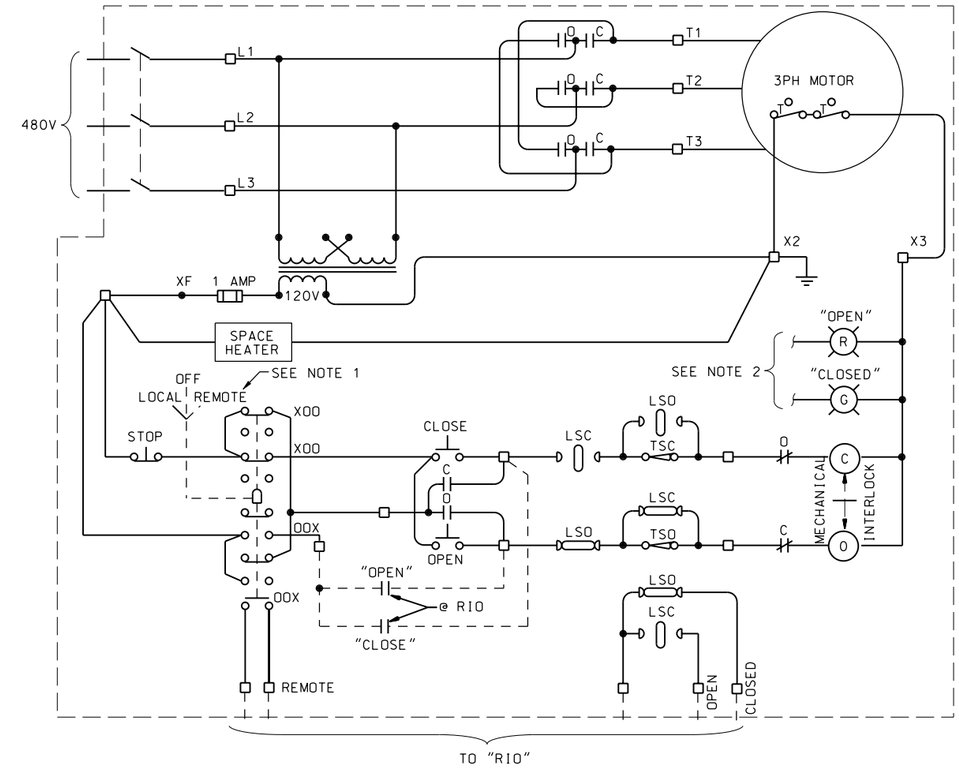

LEGEND:

- ☐ INDICATES TERMINAL AT VALVE ACTUATOR
- - - INDICATES FIELD WIRING

TORQUE SWITCHES

- TSC — TSC - CLOSED
- TSO — TSO - OPEN

LIMIT SWITCHES

- LSO — LSO - OPEN
- LSC — LSC - CLOSED

NOTES:

1. CONTROL CIRCUIT AT VALVE ACTUATOR TO BE MANUFACTURER'S STANDARD FOR LOCAL/OFF/REMOTE, OPEN/STOP/CLOSE CONTROL. FOR COMPLETE REQUIREMENTS, SEE SPECIFICATIONS.
2. VALVE SHOWN CLOSED.
3. ADD FACILITY NUMBER "D0010" PREFIX TO ALL TAG NUMBERS.

TORQUE SWITCHES

- TSC — TSC - CLOSED
- TSO — TSO - OPEN

LIMIT SWITCHES

- LSO — LSO - OPEN
- LSC — LSC - CLOSED

ELECTRICALLY OPERATED MODULATING VALVE FCV-"X"

X = 10046, 10151, 31106, 31210, 31212, 31213, 32106, 32210, 32212, 32213, 40031
X = 50005
X = 55001

ELECTRICALLY OPERATED OPEN-CLOSE VALVE FV-"X"

X = 61100, 64100, 62100, 65100, 63100, 66100, 67100, 68100, 69100, 94150
X = 10211, 10215, 10221, 10225, 31103, 31104, 31110, 31111, 31214, 31215, 31216, 31205, 32110, 32103, 32104, 32111, 32214, 32215, 32205, 32216

REGISTERED PROFESSIONAL ENGINEER RANDALL S. DENTON No. 10438 Exp. 09/30/10 ELECTRICAL STATE OF CALIFORNIA

DATE: 10/05/09

SYMBOL	DESCRIPTIONS	DATE	APPROVAL

REVISIONS

EASTERN MUNICIPAL WATER DISTRICT
PERRIS II DESALINATION FACILITY
PERRIS, CALIFORNIA

MOTOR CONTROL SCHEMATICS 4

DESIGNED BY: A MATHEWS
DRAWN BY: J HAMNER
CHECKED BY: R DENTON

U.S. ARMY ENGINEER DISTRICT
LOS ANGELES
CORPS OF ENGINEERS

CH2MHILL

SUBMITTED BY: ART JUNG, P.E.
CHIEF, DESIGN BRANCH

CADD FILE NAME: PDFe634d.dgn
SPEC. NO.: NOT APPLICABLE
L.A. DISTRICT FILE NO. XXX-XXXX

E-34

SHEET 179 OF 226 SHEETS

PLOT DATE: 2/19/2010 PLOT TIME: 11:10:25 AM

NDM-SCO:EMWD USACE PERRIS II/ PDFe634d.dgn