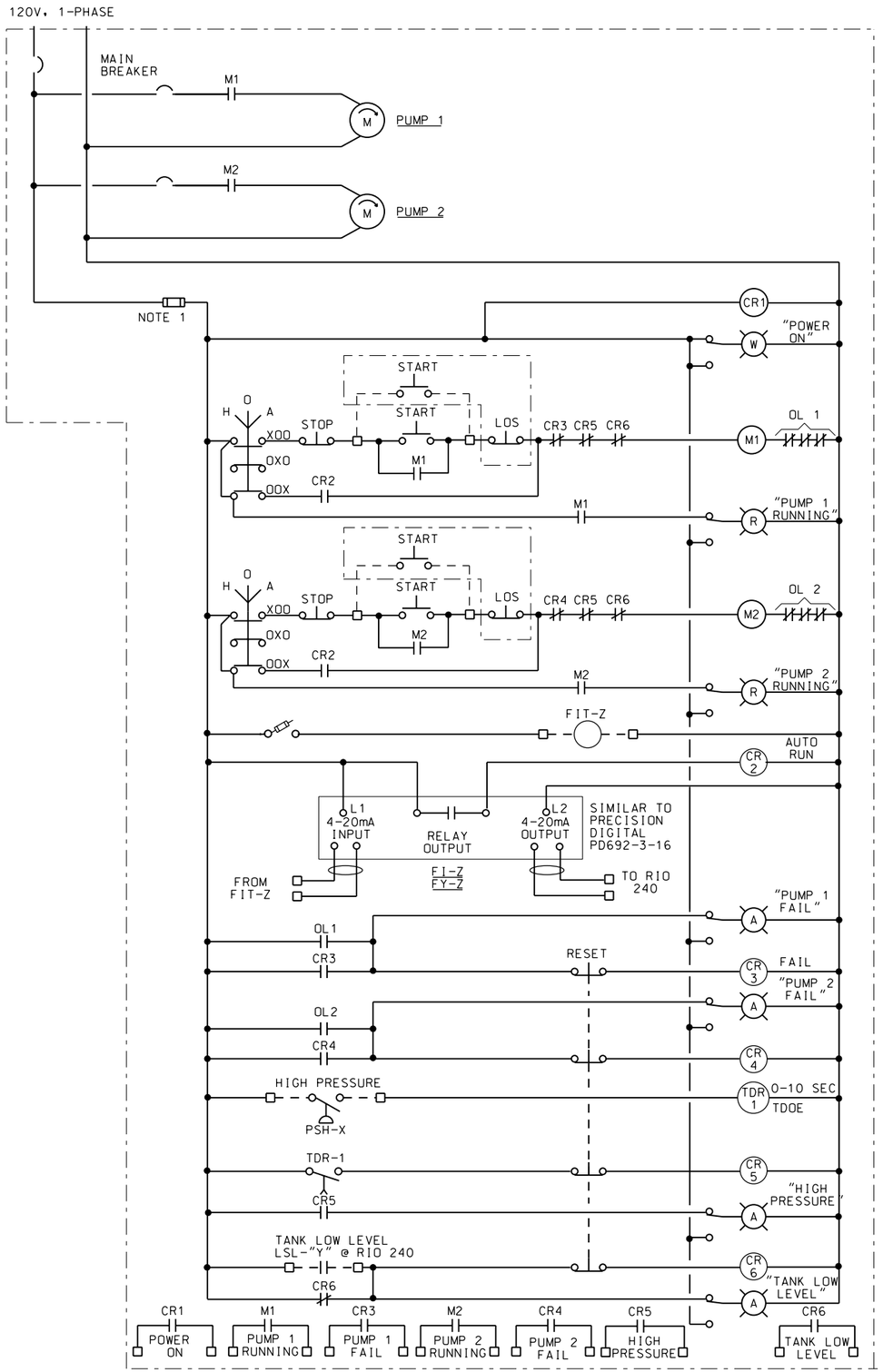

TRANSFER PUMP CONTROL PANEL (NAOH & CITRIC ACID)

LCP-65210, LCP-68210
X=65201, 68210, Y=65010, 68010, Z=65203, 68111

NOTES:

1. PROVIDE CPT SIZED TO MEET REQUIREMENTS OF THE ACTUAL EQUIPMENT SUPPLIED. COORDINATE EXACT REQUIREMENTS WITH MOTOR AND/OR PUMP SUPPLIER MANUFACTURER. MINIMUM SIZE SHALL BE 100VA.
2. DIAGRAMS ARE TYPICAL AND ARE MEANT TO SHOW THE NUMBER AND FUNCTION OF THE VARIOUS COMPONENTS AND SIGNALS WITHIN THE THE MOTOR CONTROLLERS AND BETWEEN FIELD DEVICES. MOTOR CONTROLLERS AND OTHER DEVICES (EG. PLC'S). THE CONTRACTOR SHALL COORDINATE THE FINAL REQUIREMENTS AND MAKE ALL ADJUSTMENTS NECESSARY AS REQUIRED BY THE ACTUAL EQUIPMENT SUPPLIED. SEE SPECIFICATIONS FOR ADDITIONAL REQUIREMENTS.
3. ADD FACILITY NUMBER "D0010" PREFIX TO ALL TAG NUMBERS.

SYMBOL	DESCRIPTIONS	DATE	APPROVAL

REVISIONS

EASTERN MUNICIPAL WATER DISTRICT
PERRIS II DESALINATION FACILITY
PERRIS, CALIFORNIA

MOTOR CONTROL SCHEMATICS 5

DESIGNED BY: A MATHEWS
DRAWN BY: J HAMNER
CHECKED BY: R DENTON

U.S. ARMY ENGINEER DISTRICT
LOS ANGELES
CORPS OF ENGINEERS

CADD FILE NAME: PDFe635d.dgn

CH2MHILL

SUBMITTED BY: ART JUNG, P.E. CHIEF, DESIGN BRANCH

SPEC. NO.: NOT APPLICABLE

L.A. DISTRICT FILE NO. XXX-XXXX

REGISTERED PROFESSIONAL ENGINEER RANDALL S. DENTON No. 10438 Exp. 09/30/10 ELECTRICAL STATE OF CALIFORNIA

DATE: 10/05/09

E-35

SHEET 180 OF 226 SHEETS

NDM-SCO:EMWD USACE PERRIS II/ PDFe635d.dgn PLOT DATE: 2/19/2010 PLOT TIME: 11:10:32 AM