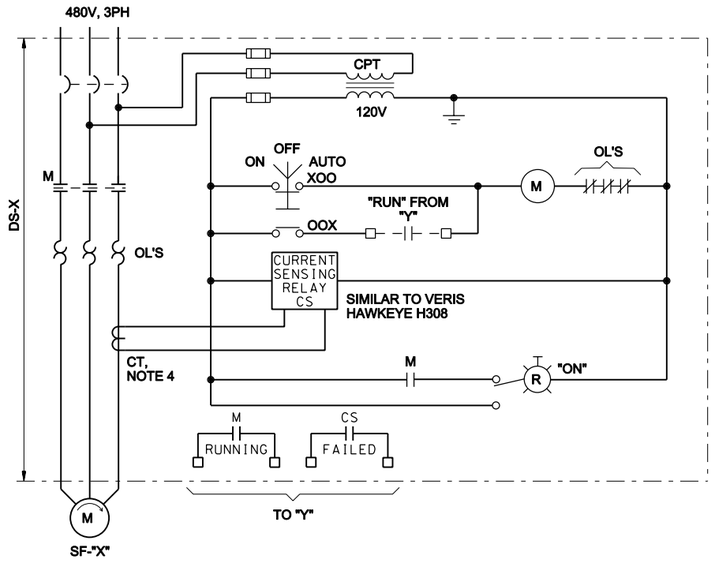

FAN WITH HAND/OFF/AUTO CONTROL AND OVERLOAD ALARM

X=24101, 24201
Y=HCP-24003

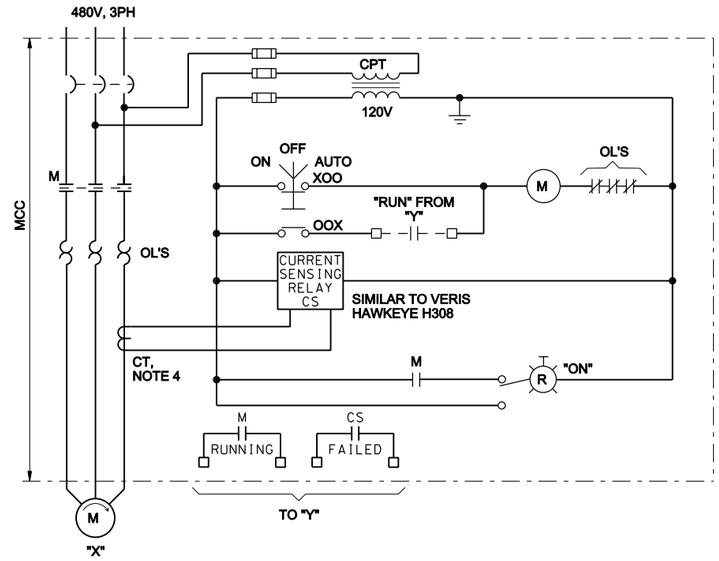

FAN WITH HAND/OFF/AUTO CONTROL AND OVERLOAD ALARM

X=SF-24301, SF-24302, SF-24401, SF-24402, SF-24501, AHU-24101, AHU-24102
Y=HCP-24001
X=SF-24601, SF-24602
Y=HCP-24002

NOTES:

1. PROVIDE CPT SIZED TO MEET REQUIREMENTS OF THE ACTUAL EQUIPMENT SUPPLIED. COORDINATE EXACT REQUIREMENTS WITH MOTOR AND/OR PUMP SUPPLIER MANUFACTURER. MINIMUM SIZE SHALL BE 100VA.
2. DIAGRAMS ARE TYPICAL AND ARE MEANT TO SHOW THE NUMBER AND FUNCTION OF THE VARIOUS COMPONENTS AND SIGNALS WITHIN THE THE MOTOR CONTROLLERS AND BETWEEN FIELD DEVICES. MOTOR CONTROLLERS AND OTHER DEVICES (EG. PLC'S). THE CONTRACTOR SHALL COORDINATE THE FINAL REQUIREMENTS AND MAKE ALL ADJUSTMENTS NECESSARY AS REQUIRED BY THE ACTUAL EQUIPMENT SUPPLIED. SEE SPECIFICATIONS FOR ADDITIONAL REQUIREMENTS.
3. ADD FACILITY NUMBER "D0010" PREFIX TO ALL TAG NUMBERS.
4. SIZE CT RATIO TO BE A MINIMUM OF 1.25 TIMES FULL LOAD AMPERE RATING OF MOTOR.

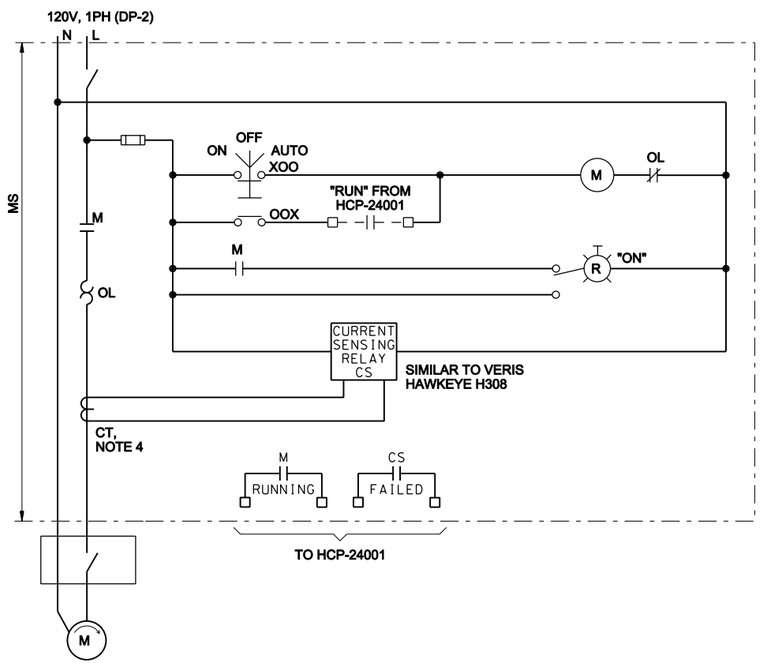

RESTROOM EXHAUST - EF-24101

SYMBOL	DESCRIPTIONS	DATE	APPROVAL

REVISIONS

EASTERN MUNICIPAL WATER DISTRICT
PERRIS II DESALINATION FACILITY
PERRIS, CALIFORNIA

MOTOR CONTROL SCHEMATIC 6

DESIGNED BY: A MATHEWS
DRAWN BY: J HAMNER
CHECKED BY: R DENTON

U.S. ARMY ENGINEER DISTRICT
LOS ANGELES
CORPS OF ENGINEERS

CH2MHILL

ART JUNG, P.E.
CHIEF, DESIGN BRANCH

SUBMITTED BY:

SPEC. NO.: NOT APPLICABLE

CADD FILE NAME: PDFe636d.dgn

L.A. DISTRICT FILE NO. XXX-XXXX

REGISTERED PROFESSIONAL ENGINEER
RANDALL S. DENTON
No. 10438
Exp. 09/30/10
ELECTRICAL
STATE OF CALIFORNIA

DATE:10/05/09

E-36

SHEET 181 OF 226 SHEETS

NDM-SCO:EMWD USACE PERRIS II/ PDFe636d.dgn PLOT DATE: 2/19/2010 PLOT TIME: 11:10:39 AM